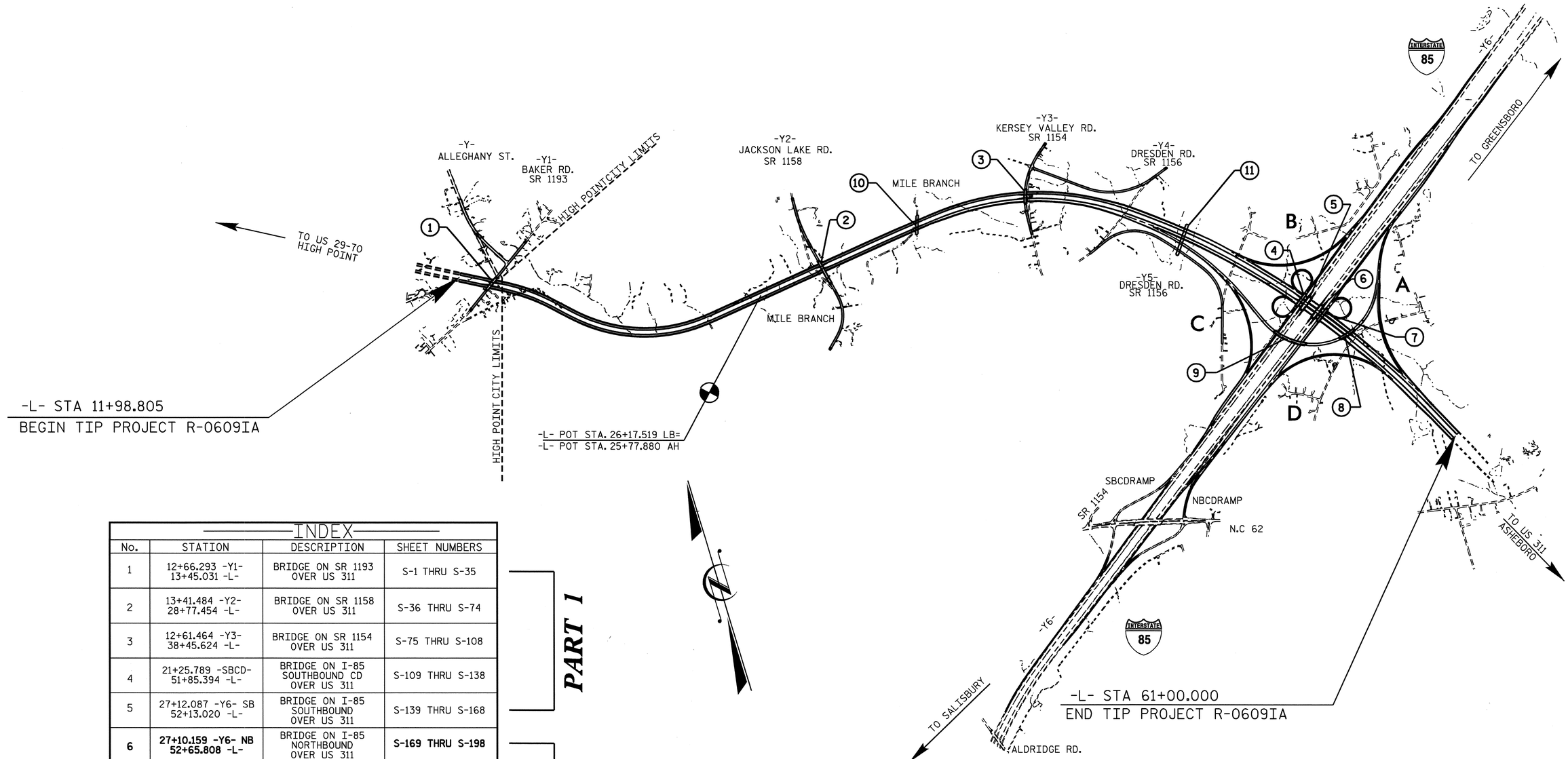

INDEX				
No.	STATION	DESCRIPTION	SHEET NUMBERS	
1	12+66.293 -Y1- 13+45.031 -L-	BRIDGE ON SR 1193 OVER US 311	S-1 THRU S-35	PART 1
2	13+41.484 -Y2- 28+77.454 -L-	BRIDGE ON SR 1158 OVER US 311	S-36 THRU S-74	
3	12+61.464 -Y3- 38+45.624 -L-	BRIDGE ON SR 1154 OVER US 311	S-75 THRU S-108	
4	21+25.789 -SBCD- 51+85.394 -L-	BRIDGE ON I-85 SOUTHBOUND CD OVER US 311	S-109 THRU S-138	
5	27+12.087 -Y6- SB 52+13.020 -L-	BRIDGE ON I-85 SOUTHBOUND OVER US 311	S-139 THRU S-168	
6	27+10.159 -Y6- NB 52+65.808 -L-	BRIDGE ON I-85 NORTHBOUND OVER US 311	S-169 THRU S-198	PART 2
7	21+32.418 -NBCD- 52+93.640 -L-	BRIDGE ON I-85 NORTHBOUND CD OVER US 311	S-199 THRU S-228	
8	22+01.765 -FLY- 54+36.375 -L-	BRIDGE ON FLYOVER OVER US 311	S-229 THRU S-265	
9	19+26.763 -FLY- 28+85.399 -Y6-	BRIDGE ON FLYOVER OVER I-85	S-266 THRU S-321	
10	33+42.000 -L-	TRIPLE 3.400m X 2.400m RCBC	C-1 THRU C-4	
11	45+88.000 -L-	SINGLE 3.700m X 2.100m RCBC	C-5 THRU C-9	

PART 2 OF 2

PROJECT NO. R-0609IA
GUILFORD COUNTY

STATE OF NORTH CAROLINA
DEPARTMENT OF TRANSPORTATION
RALEIGH

INDEX

REVISIONS						SHEET NO.
NO.	BY:	DATE:	NO.	BY:	DATE:	
1			3			TOTAL SHEETS
2			4			

23-MAY-2006 07:32
R:\STRUCT~1\frye\FINAL_~1\R0609I~1.DGN
bhanks

F.A. PROJECT: STP-NHF-119-1(15)

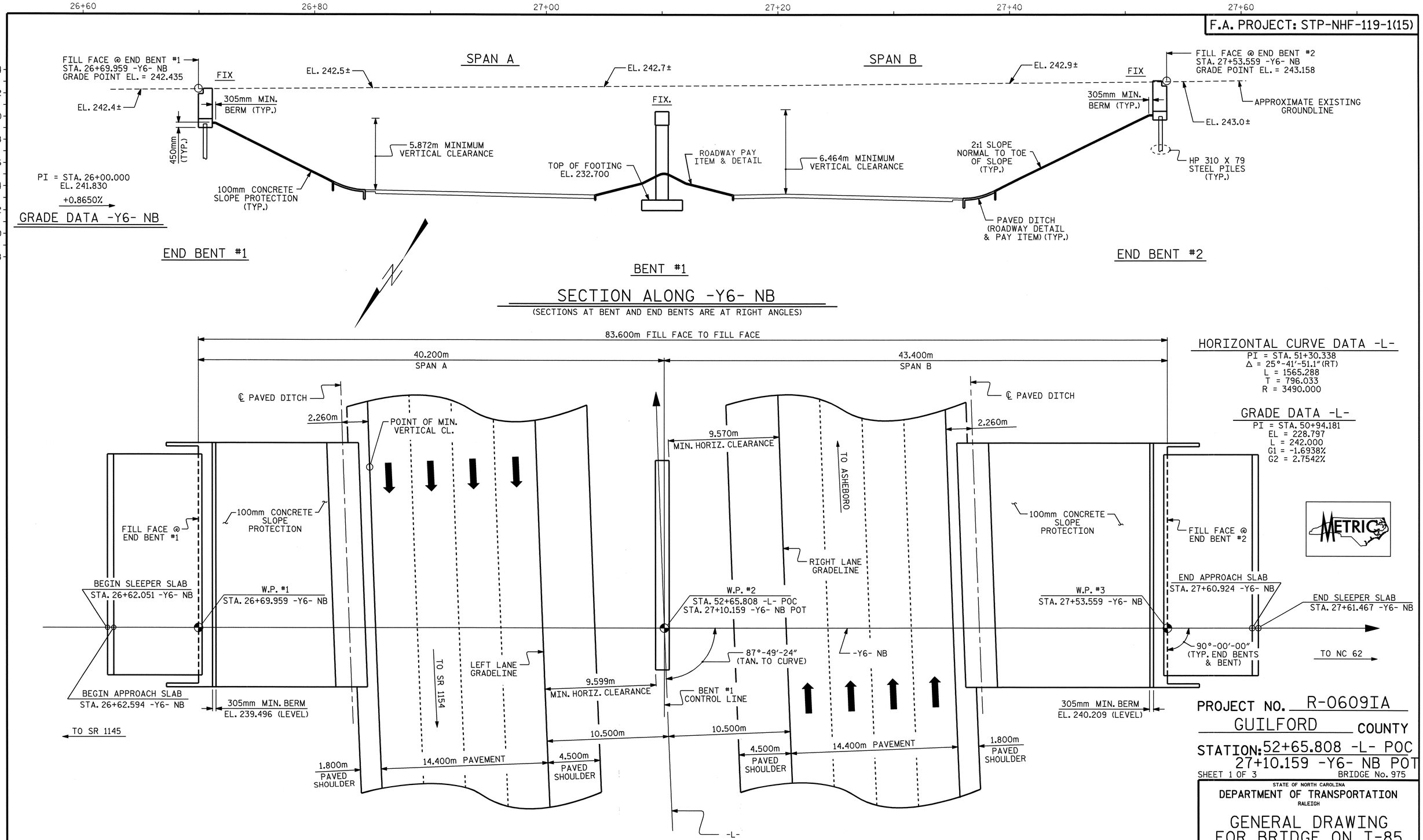

HORIZONTAL CURVE DATA -L-

PI = STA. 51+30.338
Δ = 25°-41'-51.1" (RT)
L = 1565.288
T = 796.033
R = 3490.000

GRADE DATA -L-

PI = STA. 50+94.181
EL = 228.797
L = 242.000
G1 = -1.6938%
G2 = 2.7542%

METRIC

PLAN

(PILES & FOOTINGS NOT SHOWN IN PLAN VIEW FOR CLARITY)

END BENTS AND BENTS SHALL BE CONSTRUCTED AT A SKEW ANGLE OF 90° 00' 00"

NORTH CAROLINA PROFESSIONAL SEAL 11918 ENGINEER JOHN C. FRYE
5-22-06

NORTH CAROLINA PROFESSIONAL SEAL 23926 ENGINEER BRIAN C. HANKS
5/22/06

PROJECT NO. R-0609IA
GUILFORD COUNTY
STATION: 52+65.808 -L- POC
27+10.159 -Y6- NB POT
SHEET 1 OF 3
BRIDGE No. 975

STATE OF NORTH CAROLINA
DEPARTMENT OF TRANSPORTATION
RALEIGH

GENERAL DRAWING FOR BRIDGE ON I-85 NORTHBOUND OVER US 311 BETWEEN SR 1145 AND NC 62

REVISIONS								SHEET NO.
NO.	BY:	DATE:	NO.	BY:	DATE:			S-169
1			3					TOTAL SHEETS
2			4					321

STR. #6

DRAWN BY : B.N. GRADY/QT NGUYEN DATE : 3-04/5-05
CHECKED BY : R.W. WRIGHT DATE : 5-05

15-MAY-2006 14:26
G:\STRUCT~1\frye\FINAL_~1\Str6\R023D1~1.DGN
dely

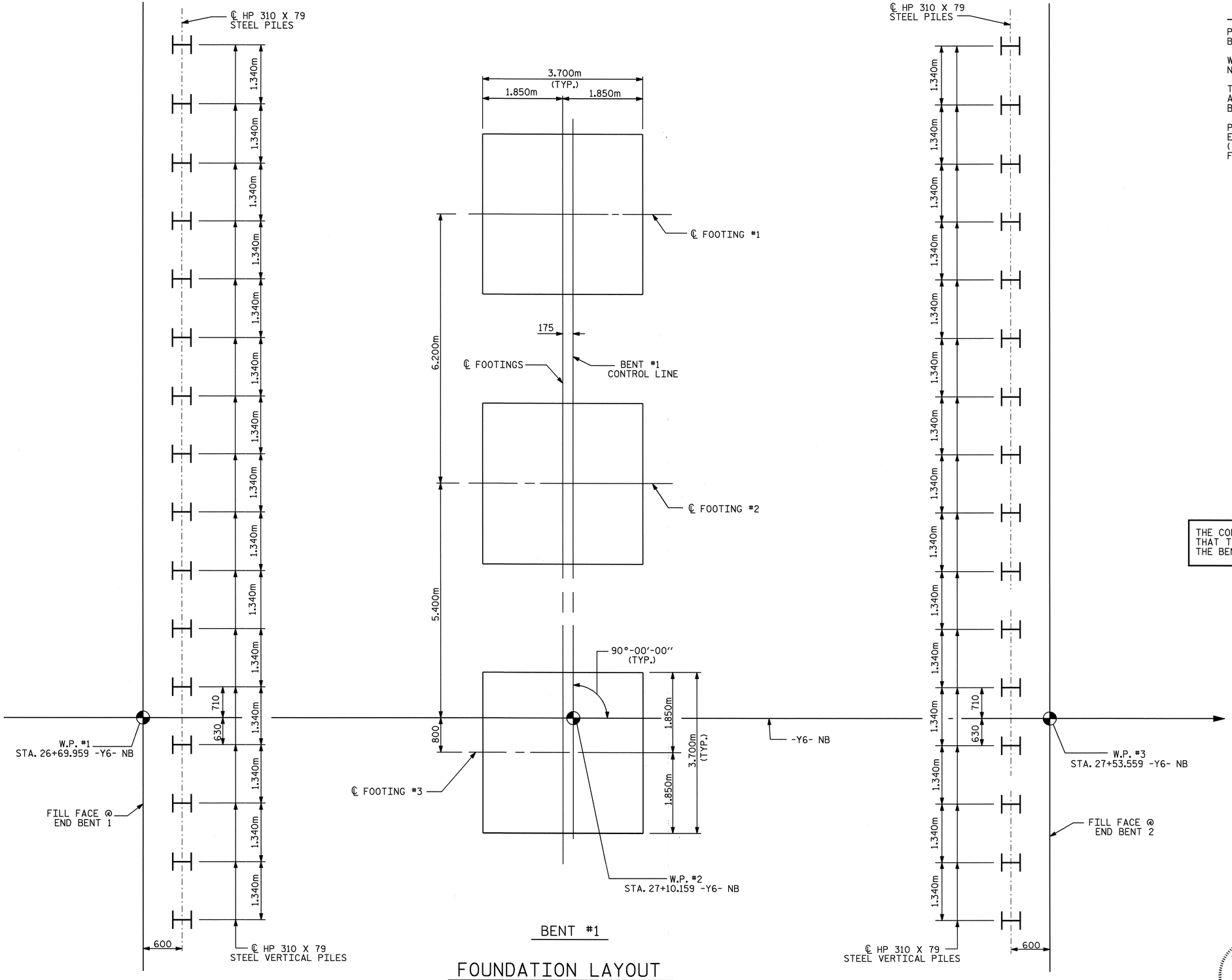

FOUNDATION LAYOUT

ALL PILES ARE HP 310 X 79 STEEL PILES.
DIMENSIONS LOCATING PILES ARE SHOWN TO ℄ PILES.
DIMENSIONS LOCATING FOOTINGS ARE SHOWN TO ℄ FOOTING.

NOTES

PILES FOR END BENT #1 & #2 SHALL BE DRIVEN TO A MINIMUM BEARING CAPACITY OF 530 kN EACH.

WHEN DRIVING PILES, THE MAXIMUM BLOW COUNT SHALL NOT BE EXCEEDED.

THE REQUIRED BEARING CAPACITY OF THE SPREAD FOOTINGS AT BENT #1 IS 480kPA. THE REQUIRED BEARING CAPACITY SHALL BE VERIFIED.

PILE EXCAVATION SHALL BE UTILIZED TO INSTALL PILES TO ELEVATION 235.189 (LEFT SIDE) & ELEVATION 234.650 (RIGHT SIDE) AT END BENT #2. SEE "PILE EXCAVATION FOR INTEGRAL ABUTMENT" SPECIAL PROVISION.

THE CONTRACTOR'S ATTENTION IS CALLED TO THE FACT THAT THE CENTERLINE OF THE FOOTINGS IS OFFSET FROM THE BENT 1 CONTROL LINE.

PROJECT NO. R-0609IA
GUILFORD COUNTY
STATION: 52+65.808 -L-

SHEET 2 OF 3

STATE OF NORTH CAROLINA
DEPARTMENT OF TRANSPORTATION
RALEIGH

GENERAL DRAWING FOR BRIDGE ON I-85 NORTHBOUND OVER US 311 BETWEEN SR 1145 AND NC 62

NORTH CAROLINA PROFESSIONAL SEAL 23926 ENGINEER BRIAN C. HAWKS
5/22/06

REVISIONS							
NO.	BY:	DATE:	NO.	BY:	DATE:	SHEET NO.	S-170
1			3			TOTAL SHEETS	321
2			4				

DRAWN BY : QT NGUYEN DATE : 4-05
CHECKED BY : R. W. WRIGHT DATE : 5-05

15-MAY-2006 14:26
G:\STRUCT~1\frye\FINAL_~1\Str6\R023DI~1.DGN
dely

STR. #6

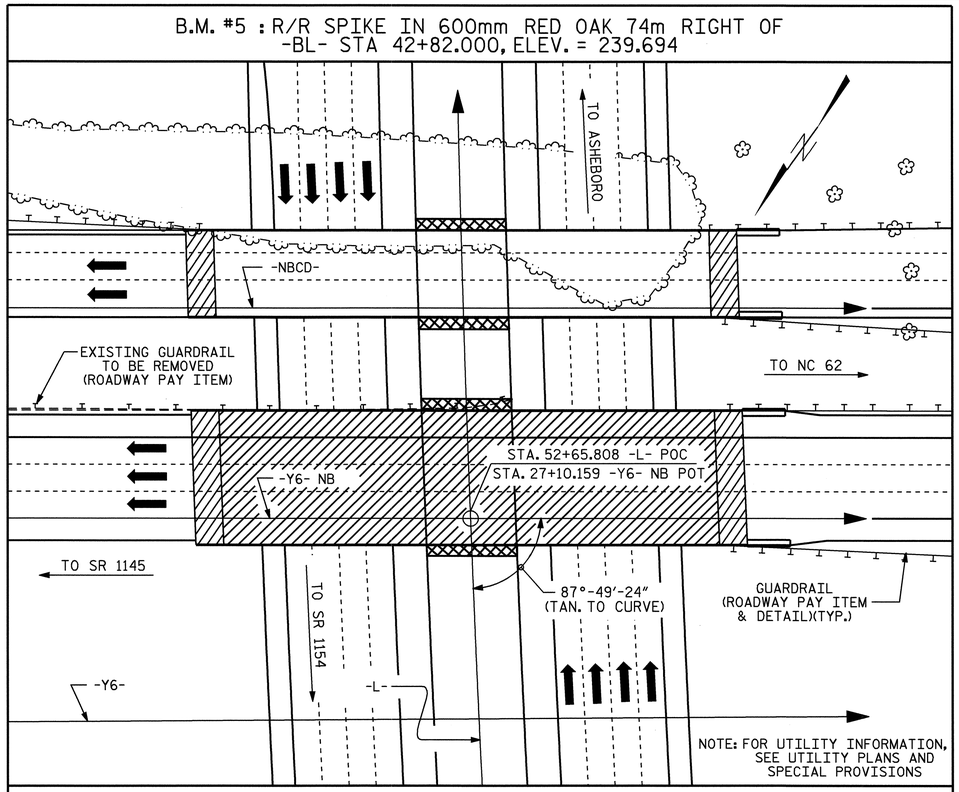

LOCATION SKETCH

NOTES

ALL DIMENSIONS ARE IN MILLIMETERS UNLESS OTHERWISE NOTED.

ALL ELEVATIONS ARE IN METERS.

ASSUMED LIVE LOAD = MS 18 OR ALTERNATE LOADING.

FOR OTHER DESIGN DATA AND GENERAL NOTES, SEE SHEET SNSM.

THIS BRIDGE HAS BEEN DESIGNED BY THE STRENGTH DESIGN METHOD AS SPECIFIED IN AASHTO STANDARD SPECIFICATIONS.

ALL STRUCTURAL STEEL SHALL BE AASHTO M270 GRADE 345W AND PAINTED IN ACCORDANCE WITH SYSTEM 4 OF ARTICLE 442-7 OF THE STANDARD SPECIFICATIONS UNLESS OTHERWISE NOTED ON THE PLANS.

THIS BRIDGE HAS BEEN DESIGNED IN ACCORDANCE WITH THE REQUIREMENTS OF THE AASHTO STANDARD SPECIFICATIONS FOR SEISMIC DESIGN OF HIGHWAY BRIDGES FOR SEISMIC PERFORMANCE CATEGORY A.

THE CONTRACTOR SHALL PROVIDE INDEPENDENT ASSURANCE SAMPLES OF REINFORCING STEEL AS FOLLOWS: FOR PROJECTS REQUIRING UP TO 360,000 kg OF REINFORCING STEEL, ONE 760mm SAMPLE OF EACH SIZE BAR USED, AND FOR PROJECTS REQUIRING OVER 360,000 kg OF REINFORCING STEEL, TWO 760mm SAMPLES OF EACH SIZE BAR USED. THE BARS FROM WHICH THE SAMPLES ARE TAKEN MUST THEN BE SPLICED WITH REPLACEMENT BARS OF THE SIZE AND LENGTH OF THE SAMPLE PLUS A MINIMUM LAP SPLICE OF THIRTY BAR DIAMETERS.

FOR FALSEWORK AND FORMWORK, SEE SPECIAL PROVISIONS.

FOR EROSION CONTROL MEASURES SEE EROSION CONTROL PLANS.

REMOVABLE FORMS MAY BE USED IN LIEU OF METAL STAY-IN-PLACE FORMS IN ACCORDANCE WITH ARTICLE 420-3 OF THE STANDARD SPECIFICATIONS.

THE CLASS AA CONCRETE IN THE BRIDGE DECK SHALL CONTAIN FLY ASH OR GROUND GRANULATED BLAST FURNACE SLAG AT THE SUBSTITUTION RATE SPECIFIED IN ARTICLE 1024-1 AND IN ACCORDANCE WITH ARTICLES 1024-5 AND 1024-6 OF THE STANDARD SPECIFICATIONS. NO PAYMENT WILL BE MADE FOR THIS SUBSTITUTION AS IT IS CONSIDERED INCIDENTAL TO THE COST OF THE REINFORCED CONCRETE DECK SLAB.

NEEDLE BEAMS WILL NOT BE ALLOWED UNLESS OTHERWISE CALLED FOR ON THE PLANS OR APPROVED BY THE ENGINEER.

FOR SUBMITTAL OF WORKING DRAWINGS, SEE SPECIAL PROVISIONS.

FOR METRIC STRUCTURAL STEEL, SEE SPECIAL PROVISIONS.

FOR CRANE SAFETY, SEE SPECIAL PROVISIONS.

WORK SHALL NOT BE STARTED ON THIS BRIDGE UNTIL ROADWAY SECTION HAS BEEN EXCAVATED.

FOR STEEL H PILES, SEE SPECIAL PROVISIONS.

TOTAL BILL OF MATERIAL

	FOUNDATION EXCAVATION	PILE EXCAVATION IN SOIL	PILE EXCAVATION NOT IN SOIL	REINFORCED CONCRETE DECK SLAB	GROOVING BRIDGE FLOORS	CLASS A CONCRETE	BRIDGE APPROACH SLABS	REINFORCING STEEL	SPIRAL COLUMN REINFORCING STEEL	STRUCTURAL STEEL	HP 310 X 79 STEEL PILES		CONCRETE BARRIER RAIL	100mm SLOPE PROTECTION	POT BEARINGS	ELASTOMERIC BEARINGS	EVAZOTE JOINT SEALS
	LUMP SUM	METERS	METERS	SQ. METERS	SQ. METERS	CU. METERS	LUMP SUM	kg	kg	APPROX. kg	NO.	METERS	METERS	SQ. METERS	LUMP SUM	LUMP SUM	LUMP SUM
SUPERSTRUCTURE				1587.6	1679.5		LUMP SUM			278,270			166.180		LUMP SUM	LUMP SUM	LUMP SUM
END BENT 1						31.4		3207			16	96.0		260			
BENT 1	LUMP SUM					90.2		9204	706								
END BENT 2		48.6	28.8			30.7		3070			16	77.4		340			
TOTAL	LUMP SUM	48.6	28.8	1587.6	1679.5	152.3	LUMP SUM	15481	706	278,270	32	173.4	166.180	600	LUMP SUM	LUMP SUM	LUMP SUM

PROJECT NO. R-0609IA
GUILFORD COUNTY
STATION: 52+65.808 -L-

SHEET 3 OF 3

STATE OF NORTH CAROLINA
DEPARTMENT OF TRANSPORTATION
RALEIGH

GENERAL DRAWING
FOR BRIDGE ON I-85
NORTHBOUND OVER
US 311 BETWEEN
SR 1145 AND NC 62

NORTH CAROLINA PROFESSIONAL SEAL 23926 ENGINEER BRIAN C. HANKS

5/22/06

REVISIONS						SHEET NO.
NO.	BY:	DATE:	NO.	BY:	DATE:	S-171
1			3			TOTAL SHEETS
2			4			321

DRAWN BY : B.N. GRADY/QT NGUYEN DATE : 3-04/5-05
CHECKED BY : R.W. WRIGHT DATE : 5-05

15-MAY-2006 14:25
G:\STRUCT~1\frye\FINAL_~1\Str6\R023DI~1.DGN
daly

STR. #6

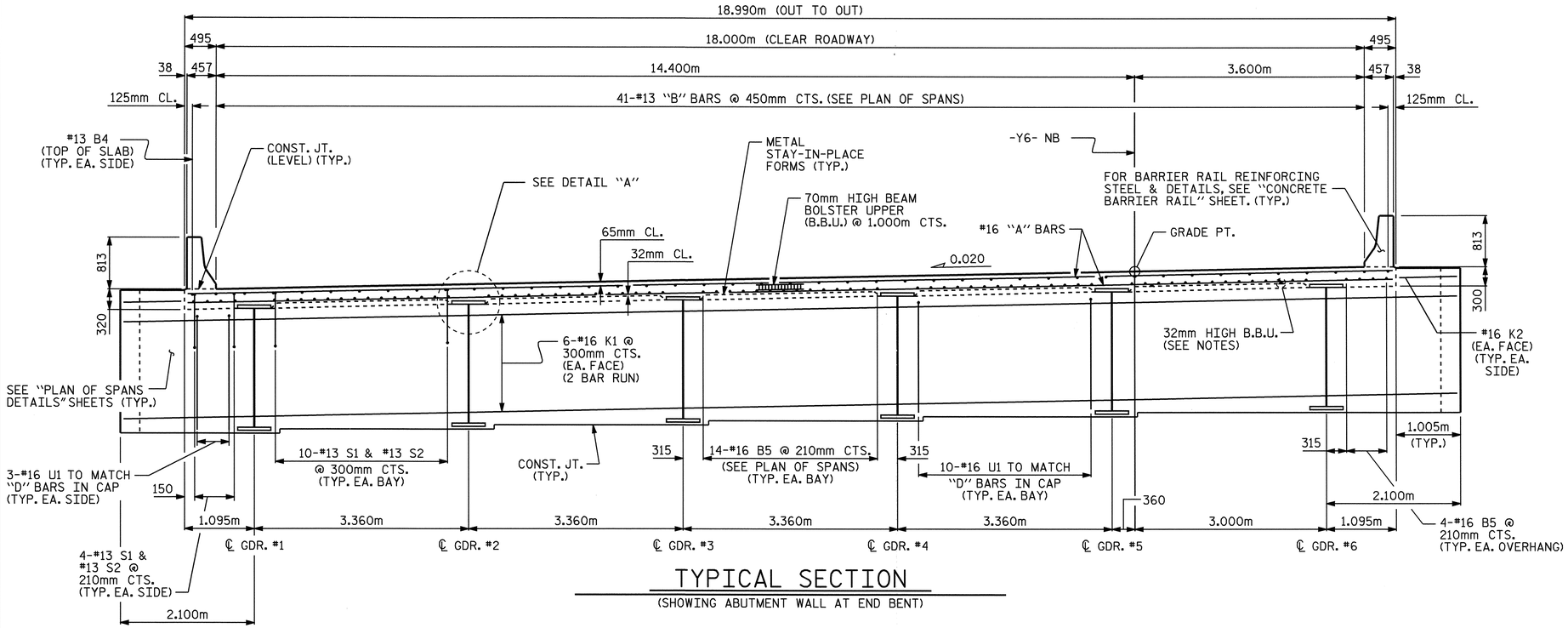

TYPICAL SECTION

(SHOWING ABUTMENT WALL AT END BENT)

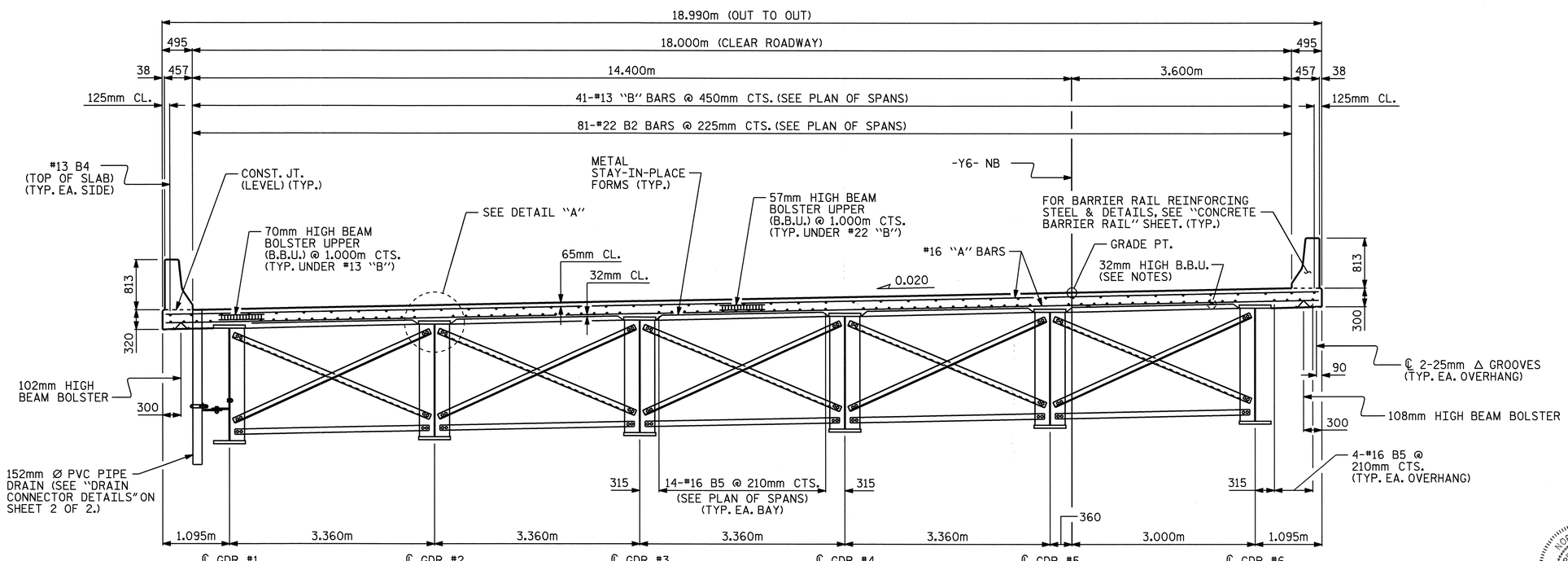

TYPICAL SECTION

(SHOWING BENT AND INTERMEDIATE DIAPHRAGMS)

NOTES

PROVIDE 32mm HIGH BEAM BOLSTERS UPPER AT 1.2m CTS. ATOP THE METAL STAY-IN-PLACE FORMS TO SUPPORT THE BOTTOM MAT OF "A" BARS. WHEN USING REMOVABLE FORMS, PROVIDE CONTINUOUS HIGH CHAIRS FOR METAL DECK (C.H.C.M.) @ 1.200m CTS. WITH A HEIGHT TO SUPPORT THE BOTTOM MAT OF "A" BARS A CLEAR DISTANCE OF 65mm ABOVE THE TOP OF THE REMOVABLE FORM.

METAL STAY-IN-PLACE FORMS SHALL NOT BE WELDED TO BEAM OR GIRDER FLANGES IN THE ZONES REQUIRING CHARPY V-NOTCH TEST. SEE STRUCTURAL STEEL DETAIL SHEETS.

PREVIOUSLY CAST CONCRETE IN A CONTINUOUS UNIT SHALL HAVE ATTAINED A MINIMUM COMPRESSIVE STRENGTH OF 20.7 MPa BEFORE ADDITIONAL CONCRETE IS CAST IN THE UNIT.

BARRIER RAIL IN A CONTINUOUS UNIT SHALL NOT BE CAST UNTIL ALL SLAB CONCRETE IN THE UNIT HAS BEEN CAST AND HAS REACHED A MINIMUM COMPRESSIVE STRENGTH OF 20.7 MPa.

STRUCTURAL STEEL ERECTION IN A CONTINUOUS UNIT SHALL BE COMPLETE BEFORE FALSEWORK OR FORMS ARE PLACED ON THE UNIT.

THE CONTRACTOR MAY, WHEN NECESSARY, PROPOSE A SCHEME FOR AVOIDING INTERFERENCE BETWEEN METAL STAY-IN-PLACE FORM SUPPORTS OR FORMS AND BEAM/GIRDER STIFFENERS OR CONNECTOR PLATES. THE PROPOSAL SHALL BE INDICATED, AS APPROPRIATE, ON EITHER THE STEEL WORKING DRAWINGS OR THE METAL STAY-IN-PLACE FORM WORKING DRAWINGS.

REMOVABLE FORMS MAY BE USED IN LIEU OF METAL STAY-IN-PLACE FORMS IN ACCORDANCE WITH ARTICLE 420-3 OF THE STANDARD SPECIFICATIONS.

FOR WING ELEVATIONS AND DETAILS, SEE "PLAN OF SPANS DETAILS" SHEETS.

THE CONTRACTOR SHALL ADJUST THE GIRDER BUILDUPS AS NECESSARY TO INCORPORATE A MAXIMUM PERMISSIBLE VARIATION IN POT BEARING DEPTH OF 13mm, SEE SPECIAL PROVISION FOR POT BEARINGS.

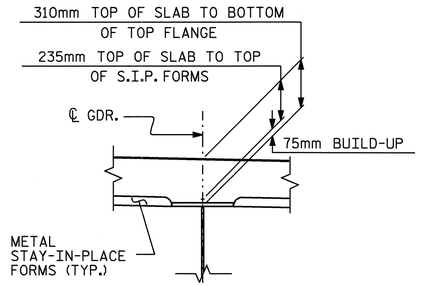

DETAIL "A"

PROJECT NO. R-0609IA

GUILFORD COUNTY

STATION: 52+65.808 -L-

SHEET 1 OF 2

STATE OF NORTH CAROLINA
DEPARTMENT OF TRANSPORTATION
RALEIGH

SUPERSTRUCTURE

TYPICAL SECTION

(NORTHBOUND LANE)

NORTH CAROLINA PROFESSIONAL SEAL 23926 ENGINEER BRIAN C. HANKS
5/22/06

REVISIONS						SHEET NO.
NO.	BY:	DATE:	NO.	BY:	DATE:	S-172
1			3			TOTAL SHEETS
2			4			321

STR. #6

DRAWN BY : P.C. BREWER/DGE DATE : 8/30/04
CHECKED BY : W.F. PARKER/ABN DATE : 11/03/04

15-MAY-2006 14:24
G:\STRUCT~1\frye\FINAL_~1\Str6\R07FE0~1.DGN
dely

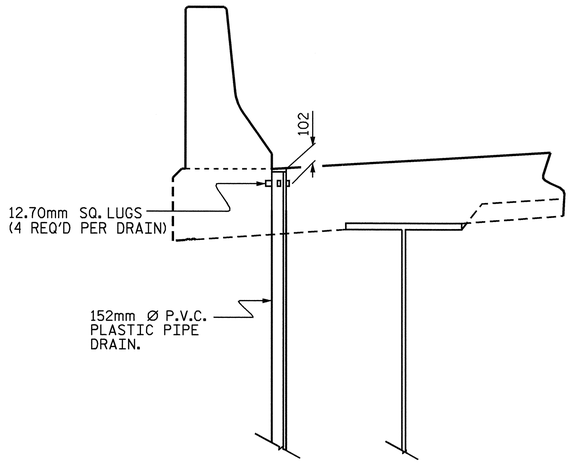

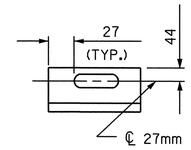

SECTION B-B

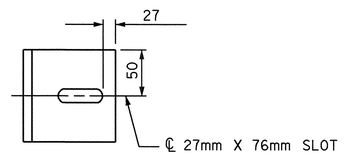

SECTION A-A

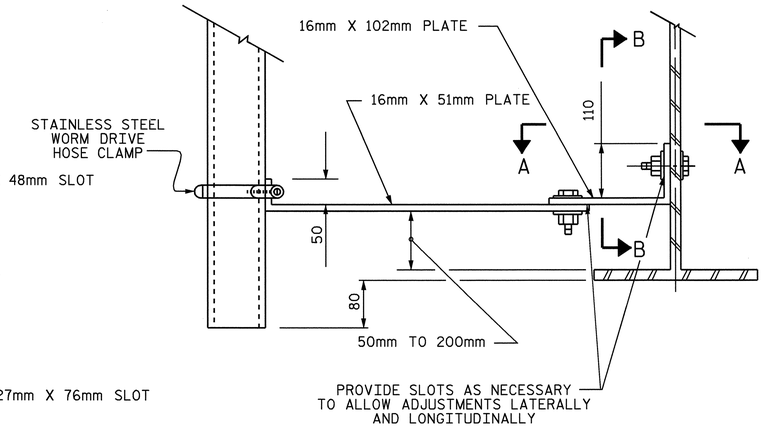

DRAIN CONNECTOR DETAILS

(8 DRAINS REQUIRED)

NOTES

BOLT SIZE FOR PIPE DRAIN BRACKETS TO BE SAME AS DIAPHRAGMS AND CROSSFRAME CONNECTIONS. STAINLESS STEEL WORM DRIVE HOSE CLAMP SHALL BE COMMERCIAL QUALITY.

PLATES FOR PIPE DRAIN BRACKETS SHALL CONFORM TO AASHTO M270 GRADE 250 STEEL OR APPROVED EQUAL.

PVC DECK DRAINS SHALL BE PAINTED WITH TWO COATS OF BROWN PRIMER MEETING THE REQUIREMENTS OF ARTICLE 1080-12 OF THE STANDARD SPECIFICATIONS. EACH COAT SHALL BE 0.050mm THICK. DECK DRAINS SHALL BE ROUGHENED PRIOR TO PAINTING. NO SEPARATE PAYMENT SHALL BE MADE FOR PAINTING PVC DECK DRAINS AS THIS IS CONSIDERED INCIDENTAL TO THE PAY ITEM FOR REINFORCED CONCRETE DECK SLAB.

TOP OF FLOOR DRAIN TO BE SET 10mm BELOW SURFACE OF SLAB.

4 - 13mm SQUARE LUGS TO BE GLUED TO THE PVC PLASTIC PIPE AT EQUAL SPACES AROUND THE PIPE DRAIN APPROXIMATELY 100mm FROM THE TOP OF THE PIPE.

COUPLING IN DRAIN PIPE WILL BE PERMITTED AS APPROVED BY THE ENGINEER.

THE 152mm DIA. PVC PIPE AND FITTINGS SHALL BE SCHEDULE 40 AND CONFORM TO ASTM D1785.

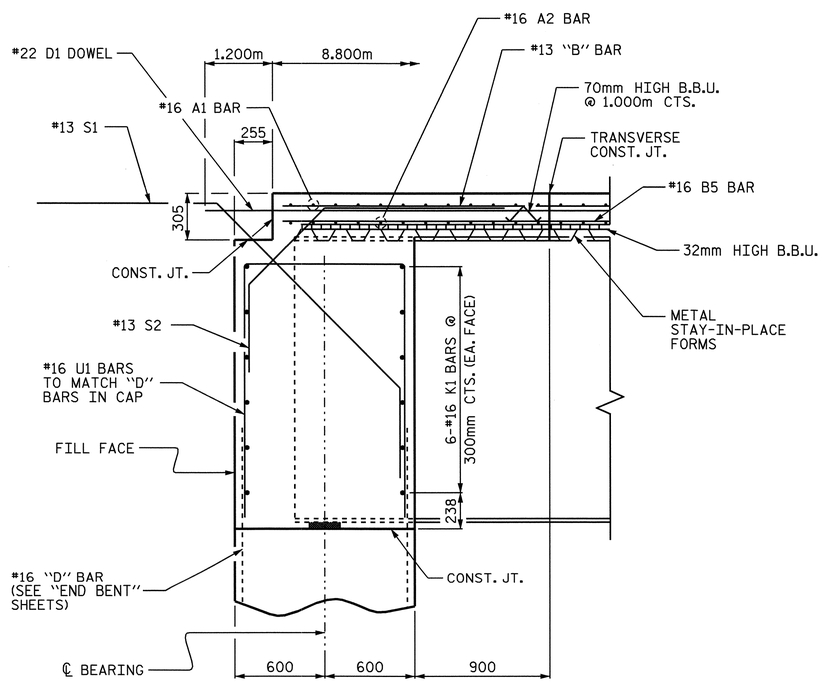

SECTION AT END BENT

(SHOWING ABUTMENT WALL)

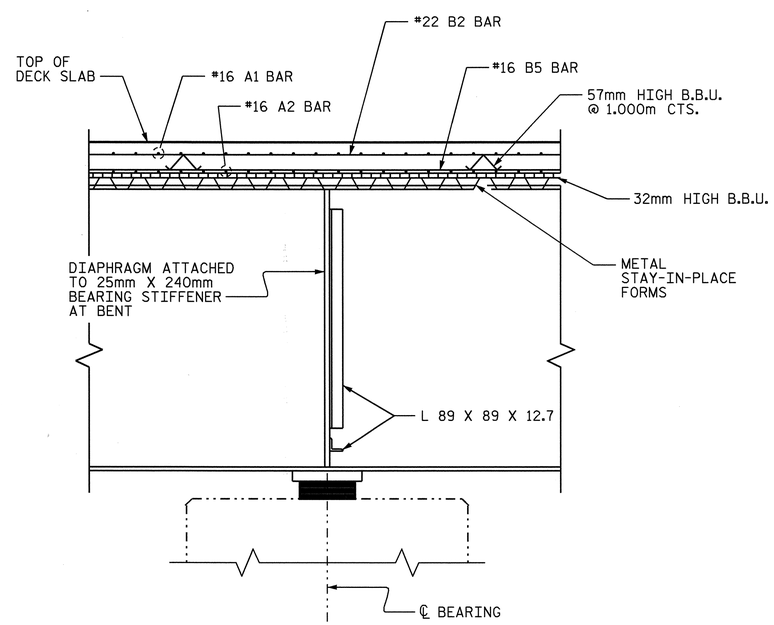

SECTION AT BENT

PROJECT NO. R-0609IA
GUILFORD COUNTY
STATION: 52+65.808 -L-

SHEET 2 OF 2

STATE OF NORTH CAROLINA
DEPARTMENT OF TRANSPORTATION
RALEIGH

SUPERSTRUCTURE
TYPICAL SECTION
DETAILS
(NORTHBOUND LANE)

NORTH CAROLINA PROFESSIONAL SEAL 23926 ENGINEER BRIAN C. HANKS
11/9/06

REVISIONS						SHEET NO.
NO.	BY:	DATE:	NO.	BY:	DATE:	S-173
1			3			TOTAL SHEETS
2			4			321

DRAWN BY : P.C. BREWER/DGE DATE : 8/31/04
CHECKED BY : W.F. PARKER/ABN DATE : 11/03/04

09-NOV-2006 14:11
R:\Structures\frye\FINAL_PLANS\Str6\R0609IA_sd_TS_STR.6REV.dgn
bhanks

STR. #6

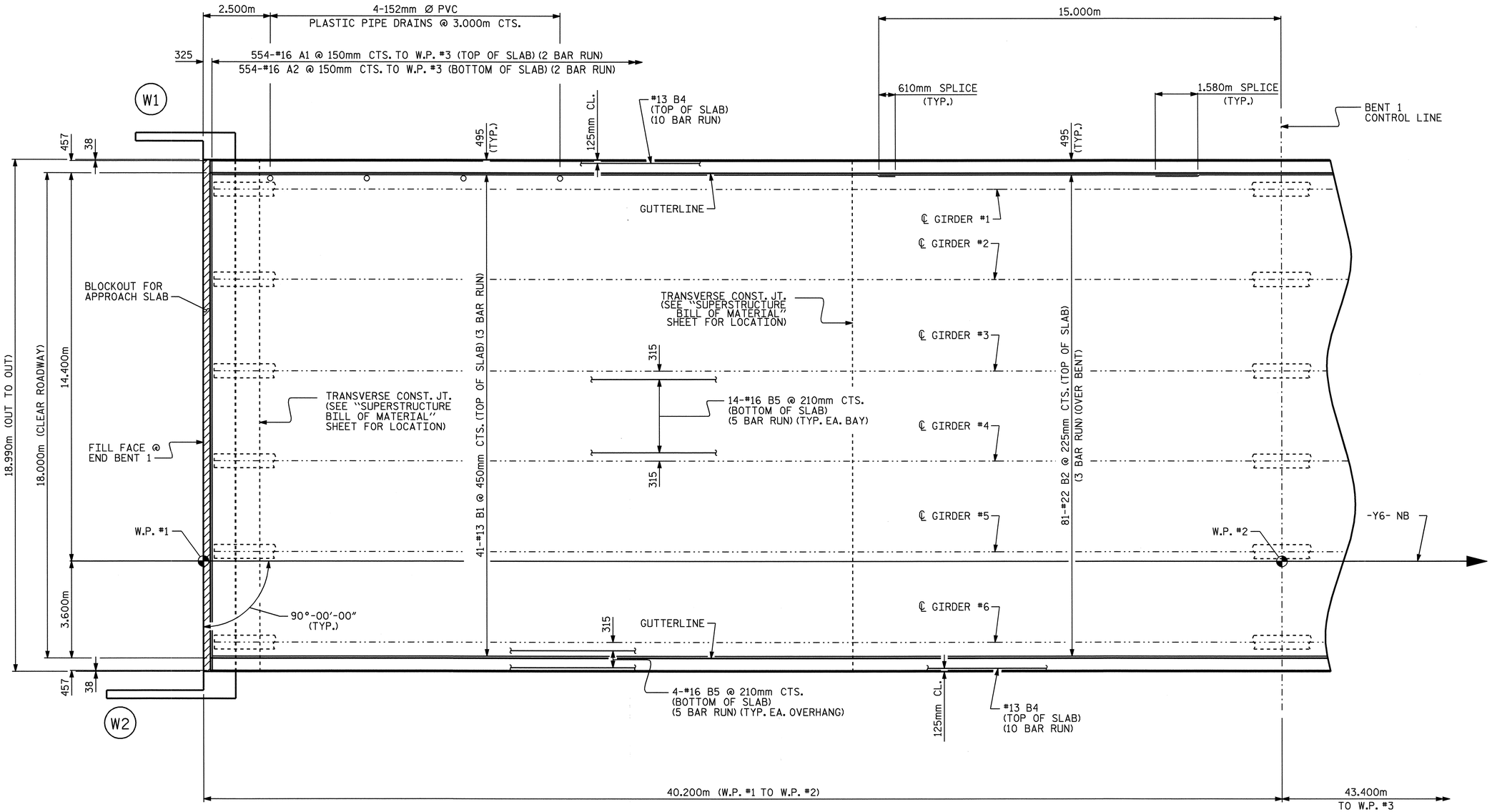

PROJECT NO. R-0609IA
GUILFORD COUNTY
STATION: 52+65.808 -L-

SHEET 1 OF 5

PLAN OF SPAN "A"

NOTES:

FOR BARRIER RAIL REINFORCING STEEL AND DETAILS, SEE "CONCRETE BARRIER RAIL" SHEET.

FOR REINFORCING STEEL IN ABUTMENTS, SEE "PLAN OF SPAN DETAILS" SHEETS.

NORTH CAROLINA PROFESSIONAL SEAL 23926 ENGINEER BRIAN C. HANKS
5/22/06

STATE OF NORTH CAROLINA
DEPARTMENT OF TRANSPORTATION
RALEIGH

SUPERSTRUCTURE

PLAN OF SPANS
SPAN A
(NORTHBOUND LANE)

REVISIONS						SHEET NO.
NO.	BY:	DATE:	NO.	BY:	DATE:	S-174
1			3			TOTAL SHEETS
2			4			321

STR. #6

DRAWN BY : P.C. BREWER/DGE DATE : 8/31/04
CHECKED BY : W.F. PARKER/ABN DATE : 11/03/04

15-MAY-2006 14:23
G:\STRUCT~1\frye\FINAL_~1\Str6\R07303~1.DGN
dely

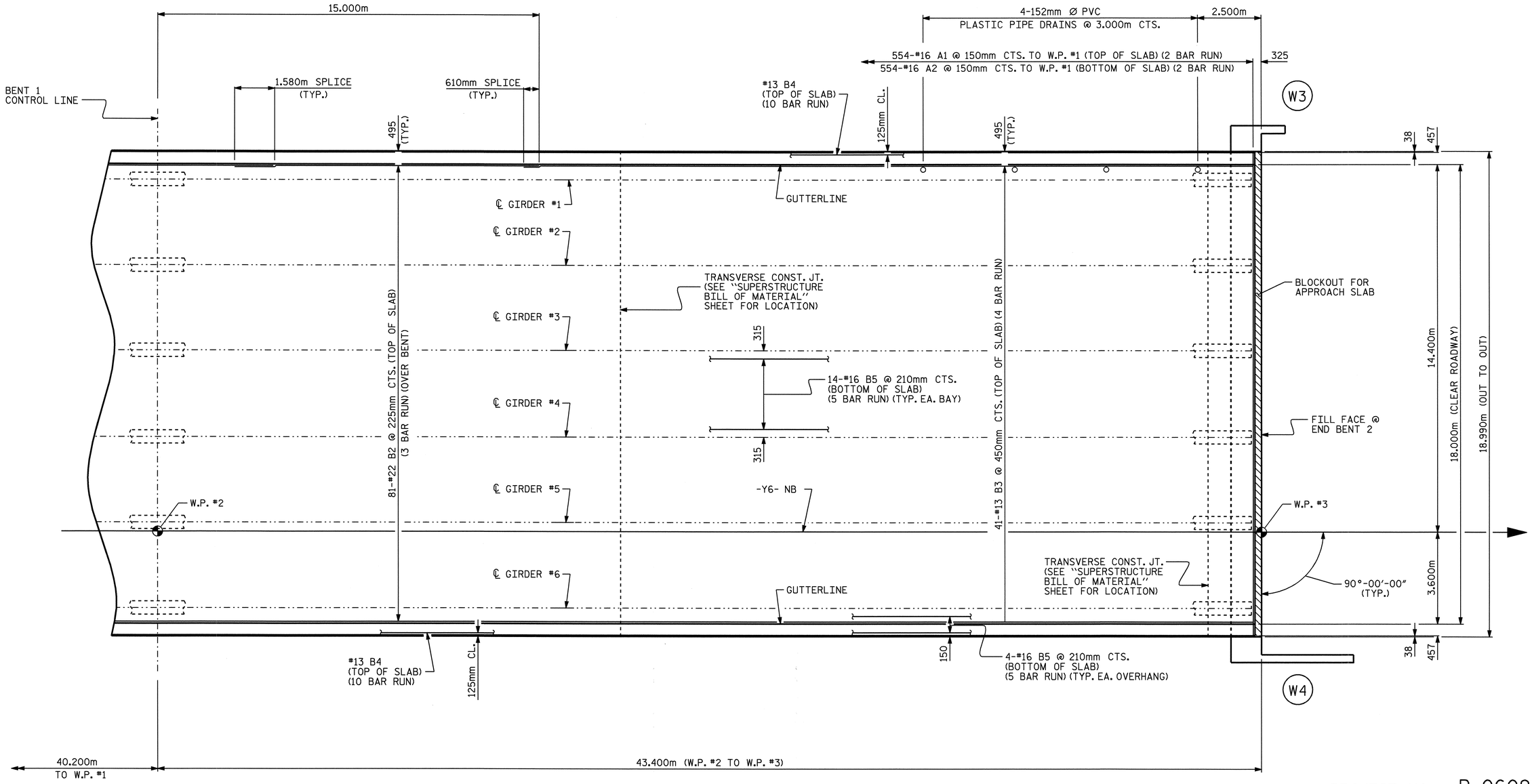

PLAN OF SPAN "B"

PROJECT NO. R-0609IA

GUILFORD COUNTY

STATION: 52+65.808 -L-

SHEET 2 OF 5

NOTES:

FOR BARRIER RAIL REINFORCING STEEL AND DETAILS, SEE "CONCRETE BARRIER RAIL" SHEET.

FOR REINFORCING STEEL IN ABUTMENTS, SEE "PLAN OF SPAN DETAILS" SHEETS.

NORTH CAROLINA PROFESSIONAL SEAL 23926 ENGINEER BRIAN C. HANKS

5/22/06

STATE OF NORTH CAROLINA
DEPARTMENT OF TRANSPORTATION
RALEIGH

SUPERSTRUCTURE

PLAN OF SPANS
SPAN B
(NORTHBOUND LANE)

REVISIONS						SHEET NO.
NO.	BY:	DATE:	NO.	BY:	DATE:	S-175
1			3			TOTAL SHEETS
2			4			321

DRAWN BY : P.C. BREWER/DGE DATE : 8/31/04
CHECKED BY : W.F. PARKER/ABN DATE : 11/03/04

15-MAY-2006 14:23
G:\STRUCT~1\frye\FINAL_~1\Str6\R07303~1.DGN
dely

STR. #6

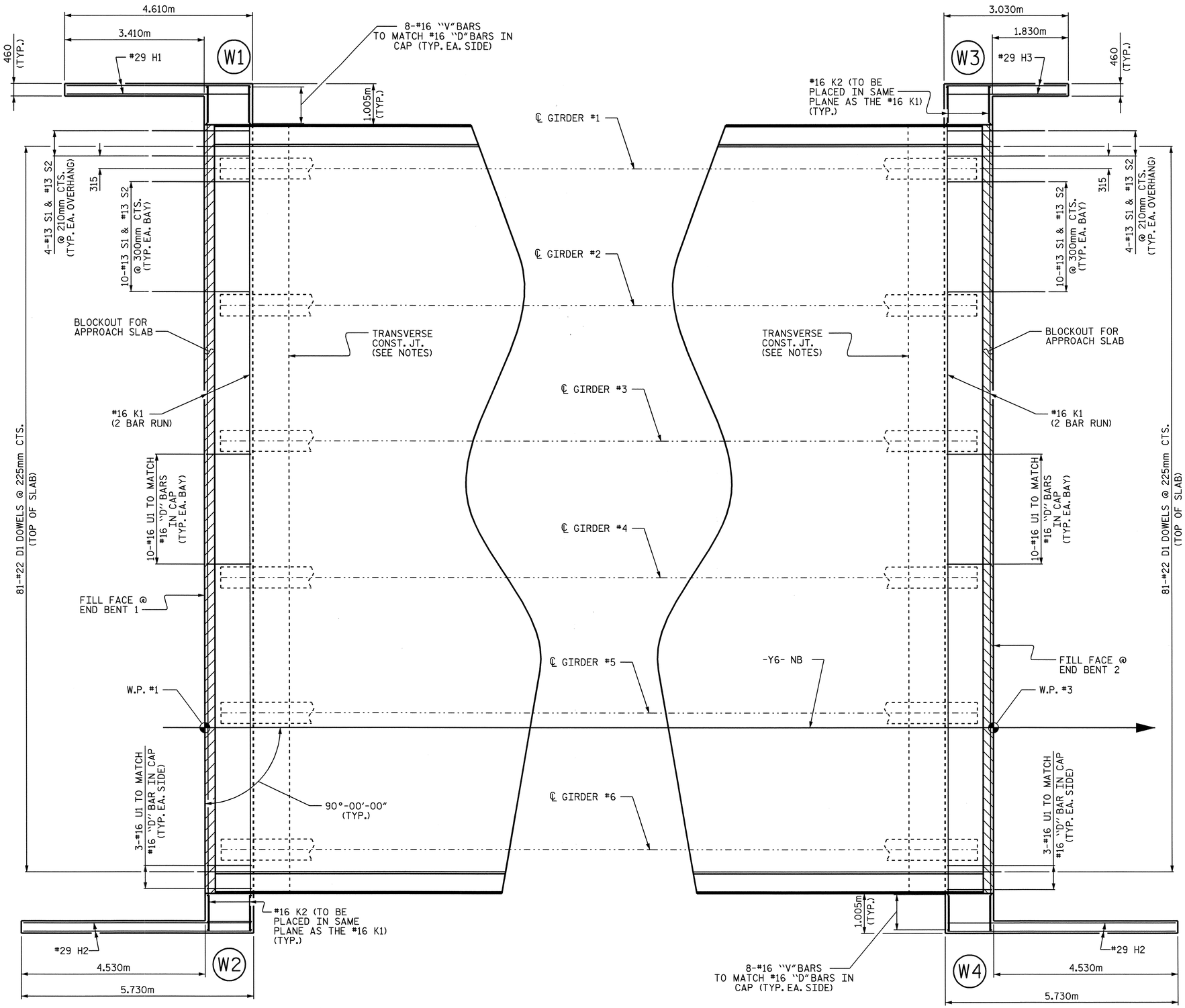

PLAN OF ABUTMENT WALL @ END BENT 1

PLAN OF ABUTMENT WALL @ END BENT 2

NOTES:

FOR SECTION THROUGH ABUTMENT, SEE "TYPICAL SECTION DETAILS" SHEET 2 OF 2.

FOR TRANSVERSE CONSTRUCTION JOINT DETAILS AND LOCATION, SEE "SUPERSTRUCTURE - BILL OF MATERIAL" SHEET.

NORTH CAROLINA PROFESSIONAL SEAL 23926 ENGINEER BRIAN C. HANKS
11/9/06

PROJECT NO. R-0609IA
GUILFORD COUNTY
STATION: 52+65.808 -L-

SHEET 3 OF 5

STATE OF NORTH CAROLINA
DEPARTMENT OF TRANSPORTATION
RALEIGH

SUPERSTRUCTURE
PLAN OF SPANS
DETAILS
(NORTHBOUND LANE)

REVISIONS						SHEET NO.
NO.	BY:	DATE:	NO.	BY:	DATE:	S-176
1			3			TOTAL SHEETS
2			4			321

STR. #6

DRAWN BY : P.C. BREWER/DGE DATE : 8/31/04
CHECKED BY : W.F. PARKER/ABN DATE : 11/03/04

09-NOV-2006 14:13
R:\Structures\frye\FINAL_PLANS\Str6\R0609IA_sd_S*_STR.6REV.dgn
bhanks

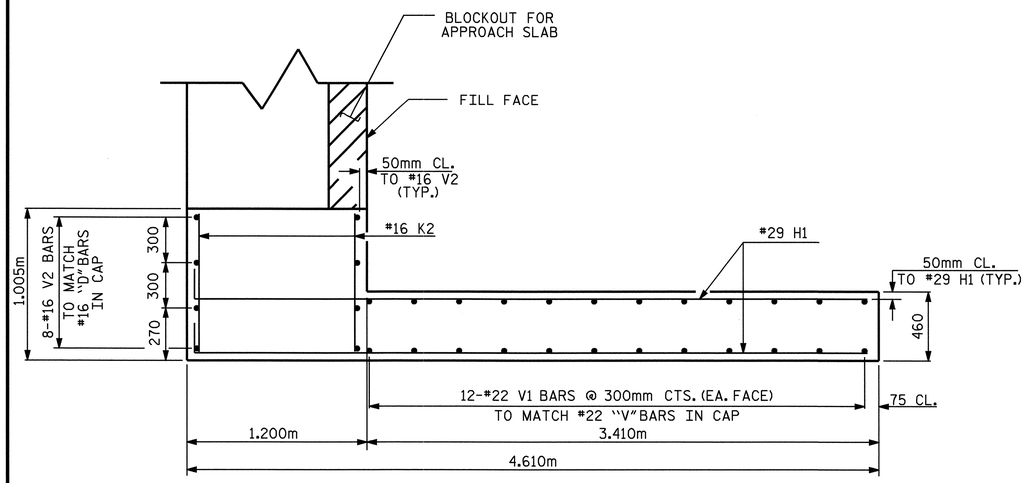

PLAN - W1

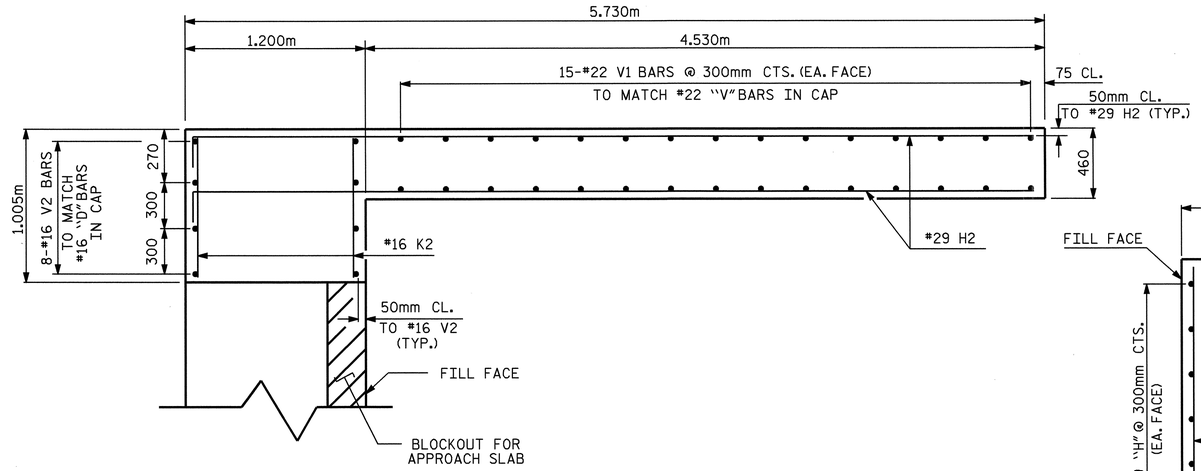

PLAN - W2

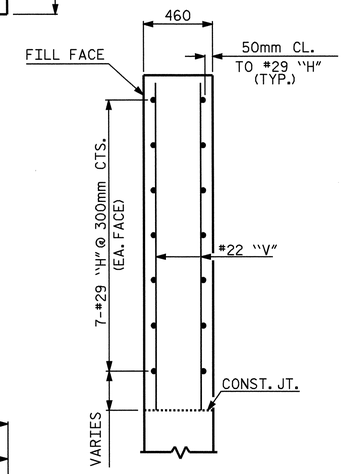

SECTION A-A

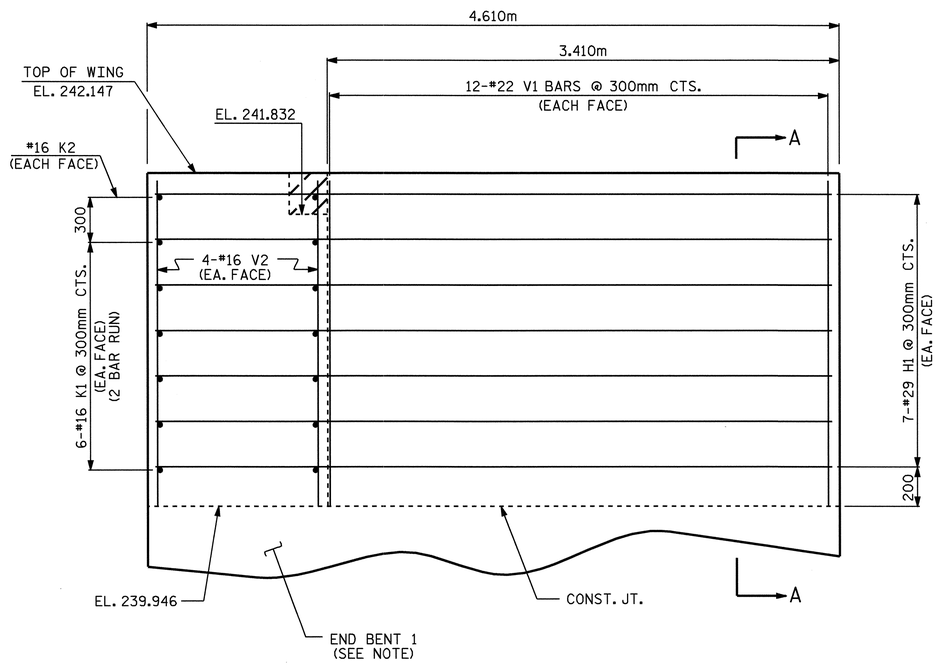

ELEVATION - W1

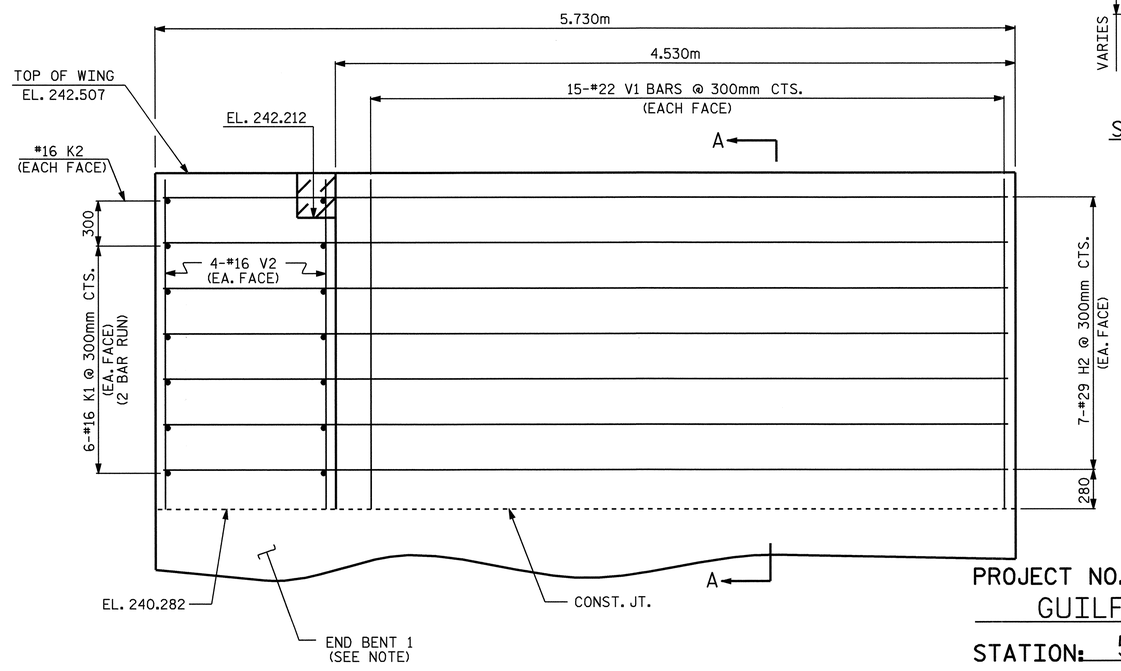

ELEVATION - W2

ABUTMENT WINGS @ END BENT 1

NOTE: FOR END BENT 1 REINFORCING STEEL AND DETAILS, SEE "SUBSTRUCTURE, END BENT 1" SHEETS.

PROJECT NO. R-0609IA
GUILFORD COUNTY
STATION: 52+65.808 -L-

SHEET 4 OF 5

STATE OF NORTH CAROLINA
DEPARTMENT OF TRANSPORTATION
RALEIGH

SUPERSTRUCTURE
PLAN OF SPANS
DETAILS
(NORTHBOUND LANE)

NORTH CAROLINA PROFESSIONAL SEAL 23926 ENGINEER BRIAN C. HANKS
5/22/06

REVISIONS						SHEET NO.
NO.	BY:	DATE:	NO.	BY:	DATE:	S-177
1			3			TOTAL SHEETS
2			4			321

DRAWN BY : D. G. ELY DATE : 4/26/05
CHECKED BY : A. B. NAIK DATE : 6/05

15-MAY-2006 14:23
G:\STRUCT~1\frye\FINAL_~1\Str6\R07303~1.DGN
dely

STR. #6

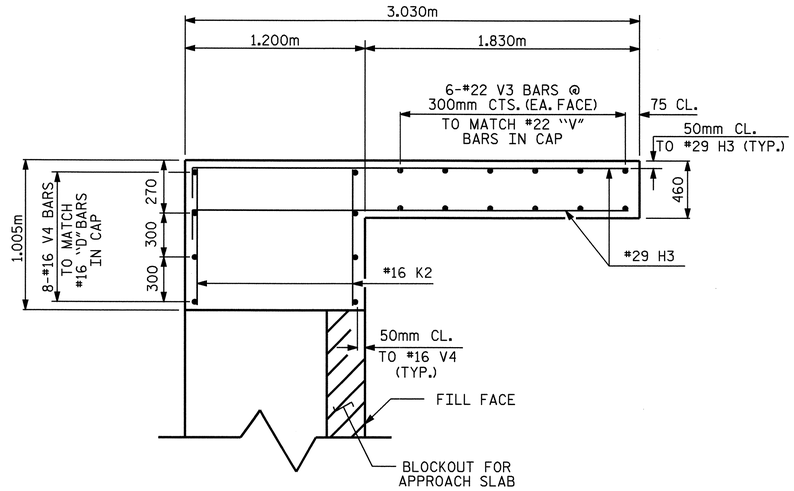

PLAN - W3

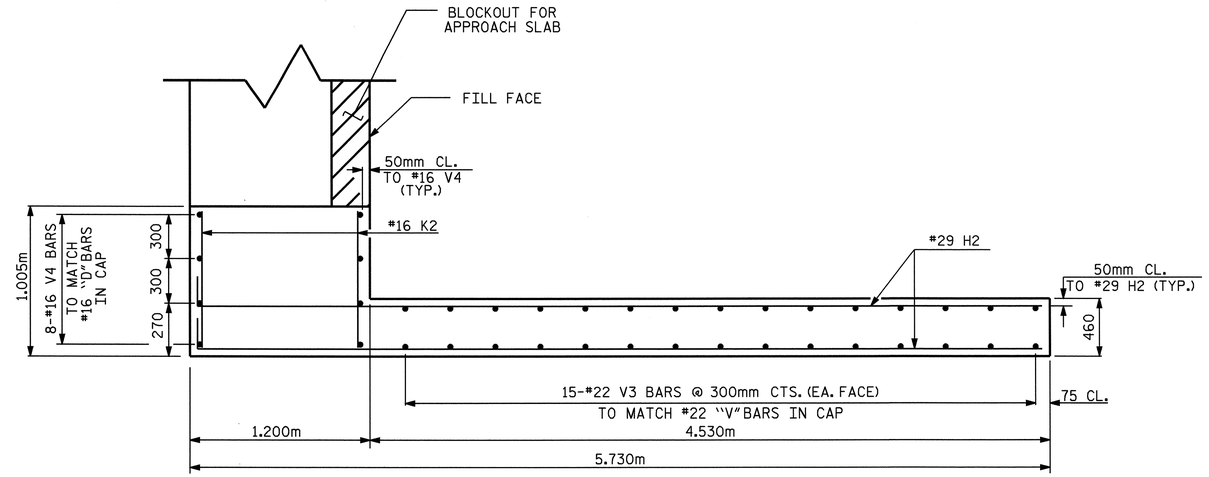

PLAN - W4

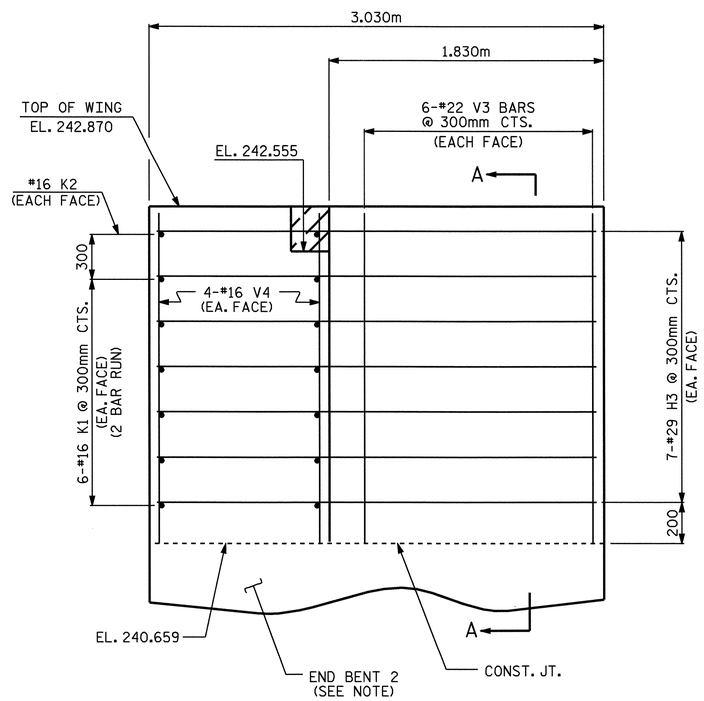

ELEVATION - W3

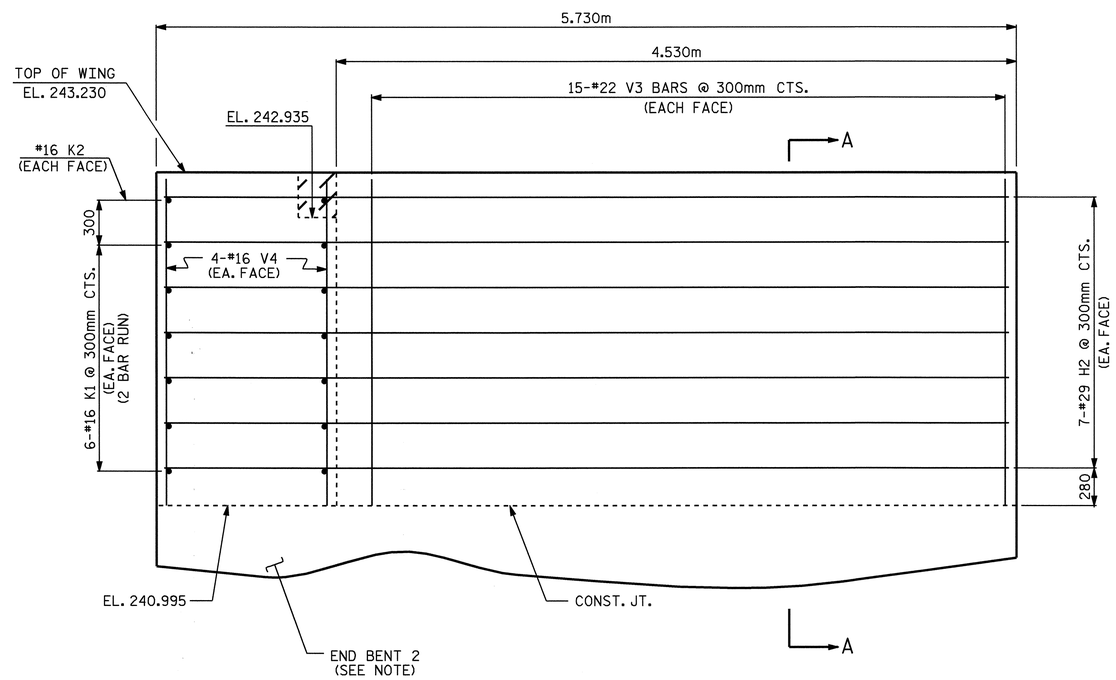

ELEVATION - W4

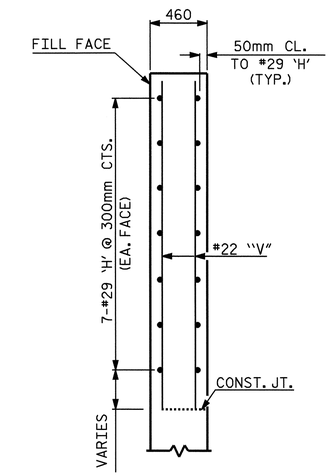

SECTION A-A

ABUTMENT WINGS @ END BENT 2

NOTE: FOR END BENT 2 REINFORCING STEEL AND DETAILS, SEE "SUBSTRUCTURE, END BENT 2" SHEETS.

PROJECT NO. R-0609IA
GUILFORD COUNTY
STATION: 52+65.808 -L-

SHEET 5 OF 5

STATE OF NORTH CAROLINA
DEPARTMENT OF TRANSPORTATION
RALEIGH

SUPERSTRUCTURE
PLAN OF SPANS
DETAILS
(NORTHBOUND LANE)

NORTH CAROLINA PROFESSIONAL SEAL 23926 ENGINEER BRIAN C. HANKS
5/22/06

REVISIONS						SHEET NO.
NO.	BY:	DATE:	NO.	BY:	DATE:	S-178
1			3			TOTAL SHEETS
2			4			321

STR. #6

DRAWN BY : D. G. ELY DATE : 4/26/05
CHECKED BY : A. B. NAIK DATE : 6/05

15-MAY-2006 14:23
G:\STRUCT~1\frye\FINAL_~1\Str6\R07303~1.DGN
dely

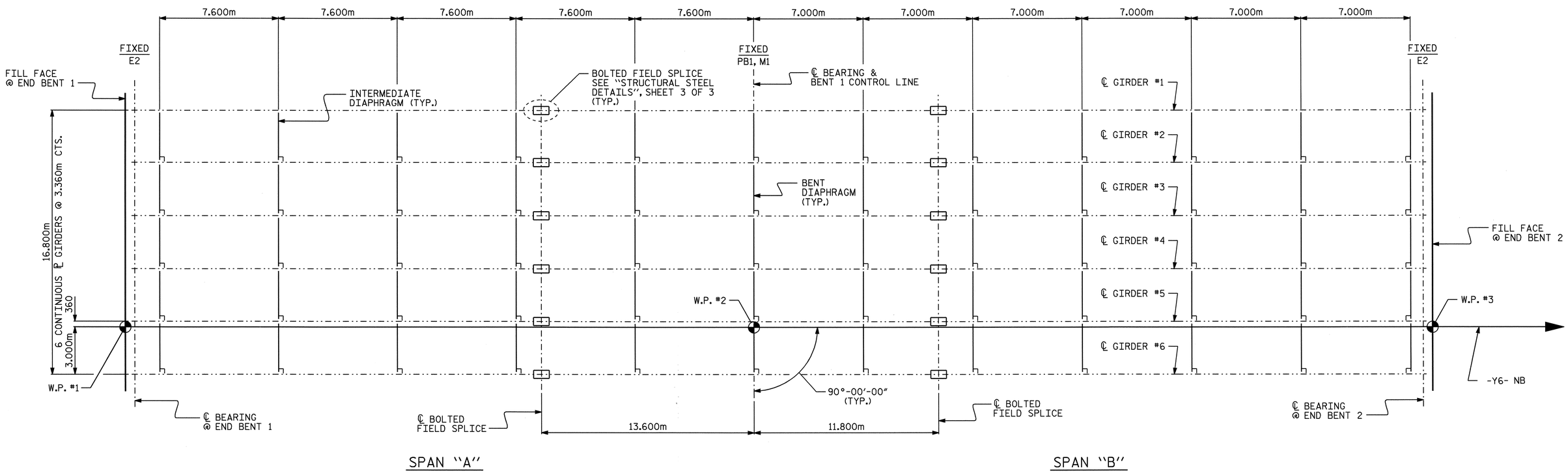

FRAMING PLAN

PROJECT NO. R-0609IA
GUILFORD COUNTY
STATION: 52+65.808 -L-

STATE OF NORTH CAROLINA
DEPARTMENT OF TRANSPORTATION
RALEIGH

SUPERSTRUCTURE

FRAMING PLAN

(NORTHBOUND LANE)

NORTH CAROLINA PROFESSIONAL SEAL 23926 ENGINEER BRIAN C. HANKS
5/22/06

REVISIONS						SHEET NO.
NO.	BY:	DATE:	NO.	BY:	DATE:	S-179
1			3			TOTAL SHEETS
2			4			321

STR. #6

DRAWN BY : P.C. BREWER/DGE DATE : 9/1/04
CHECKED BY : W.F. PARKER/ABN DATE : 11/03/04

15-MAY-2006 14:22
G:\STRUCT~1\frye\FINAL_~1\Str6\ROBE21~1.DGN
dely

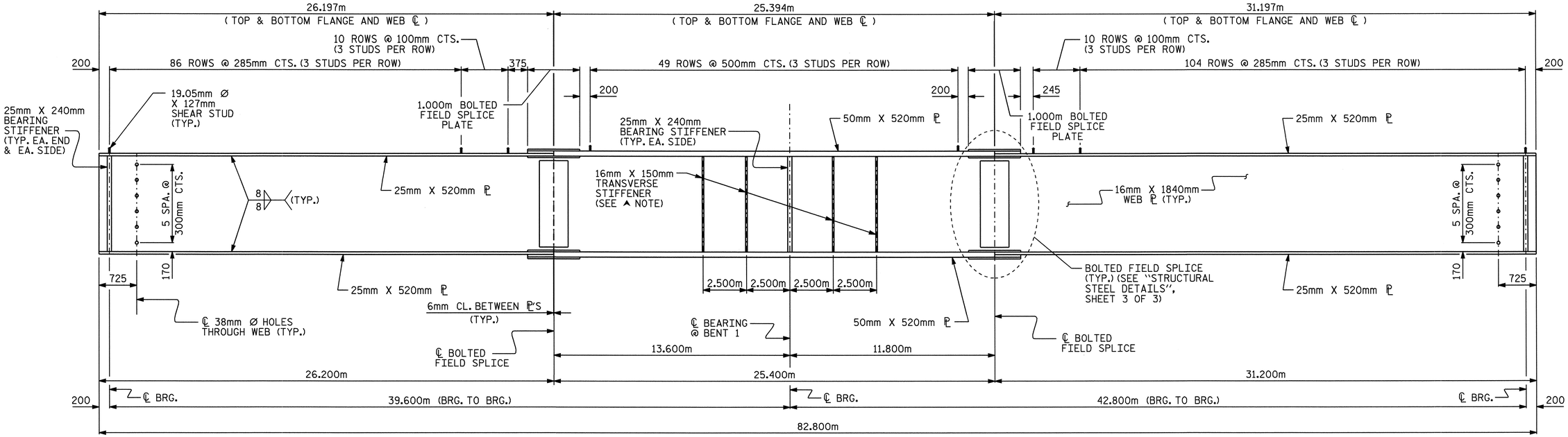

ELEVATION OF GIRDER

▲ NOTE:
TRANSVERSE STIFFENERS ARE TO BE PLACED ON ONE SIDE OF GIRDERS ONLY. TRANSVERSE STIFFENERS ARE NOT TO BE PLACED ON THE OUTSIDE OF EXTERIOR GIRDERS.

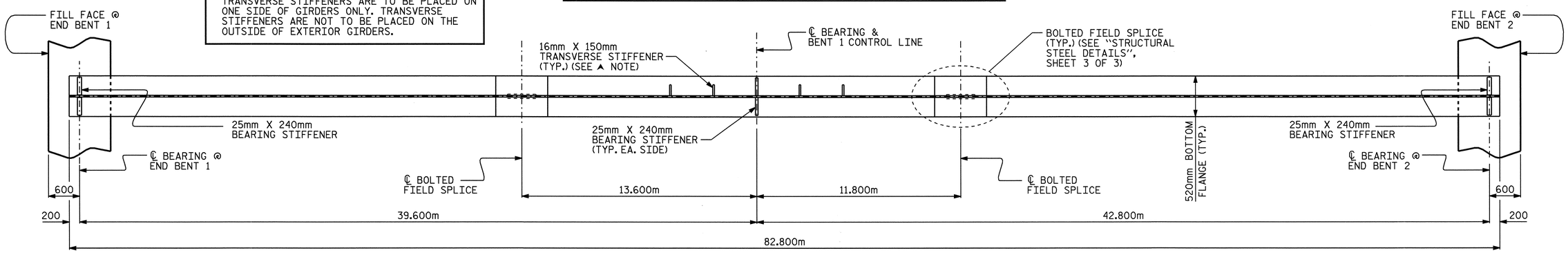

BOTTOM FLANGE DETAIL

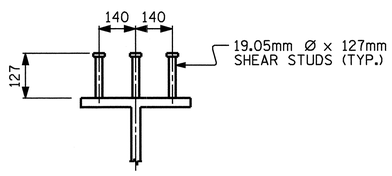

SHEAR STUD DETAILS

(TYP. EA. GIRDER)

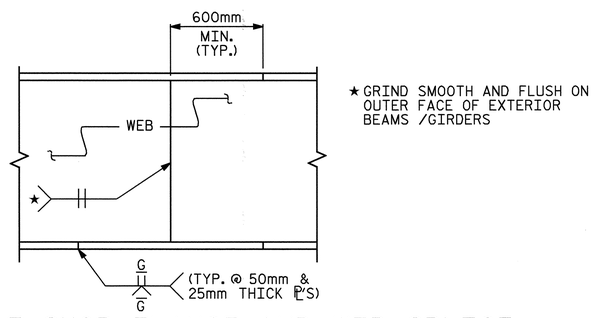

PERMISSIBLE SHOP FLANGE AND WEB SPLICE

PROJECT NO. R-0609IA
GUILFORD COUNTY
STATION: 52+65.808 -L-

SHEET 1 OF 3

STATE OF NORTH CAROLINA
DEPARTMENT OF TRANSPORTATION
RALEIGH

SUPERSTRUCTURE
STRUCTURAL STEEL DETAILS
(NORTHBOUND LANE)

NORTH CAROLINA PROFESSIONAL SEAL 23926 ENGINEER BRIAN C. HANKS
5/22/06

REVISIONS						SHEET NO.
NO.	BY:	DATE:	NO.	BY:	DATE:	S-180
1			3			TOTAL SHEETS
2			4			321

DRAWN BY : P.C. BREWER/DGE DATE : 8/26/04
CHECKED BY : W.F. PARKER/ABN DATE : 11/03/04

15-MAY-2006 14:21
G:\STRUCT~1\frye\FINAL_~1\Str6\R07F03~1.DGN
dely

STR. #6

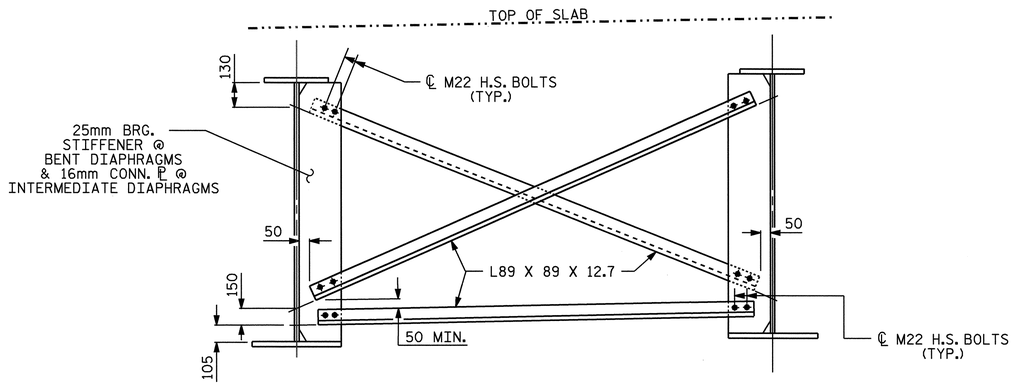

TYPICAL BENT & INTERMEDIATE DIAPHRAGM

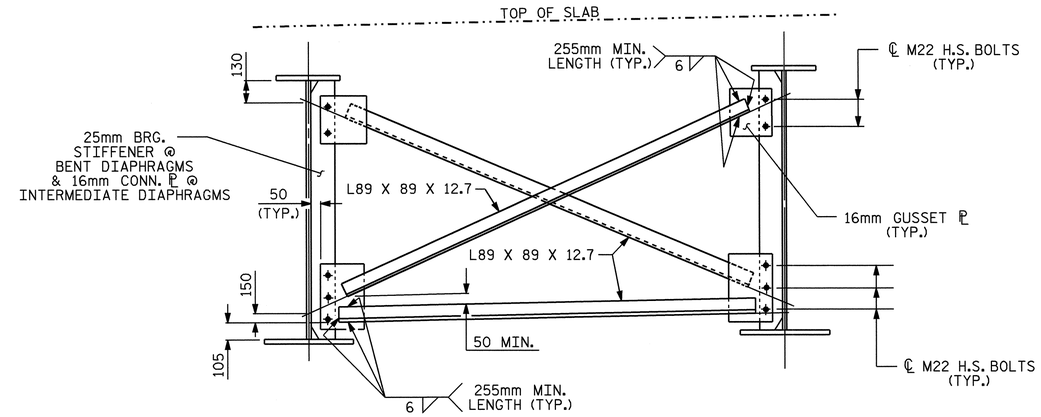

OPTIONAL BENT & INTERMEDIATE DIAPHRAGM

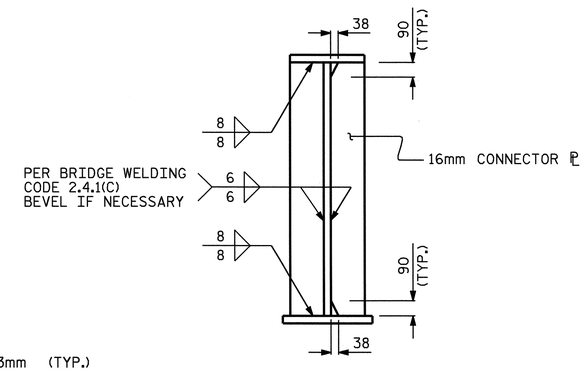

CONNECTOR ℙ

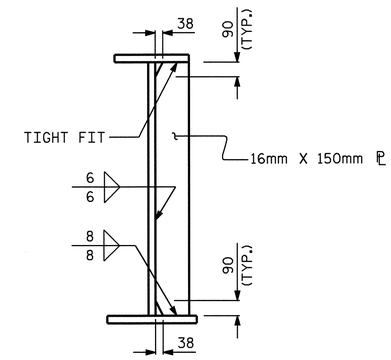

TRANSVERSE STIFFENER

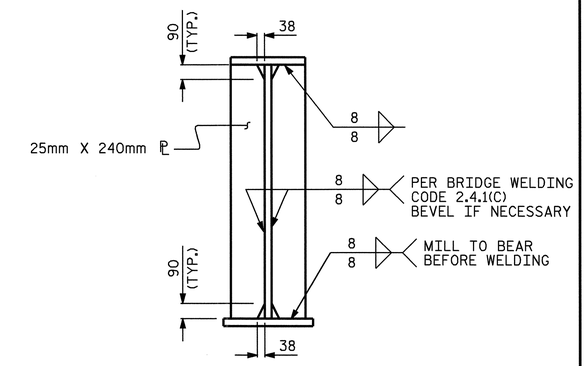

BEARING STIFFENER

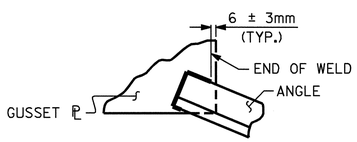

TYPICAL ANGLE TO GUSSET PLATE CONNECTIONS

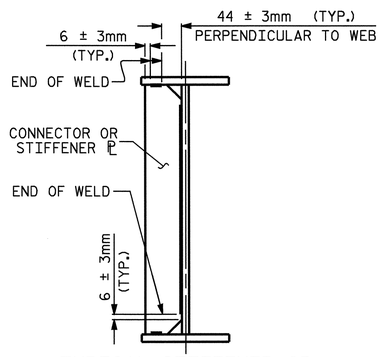

TYPICAL STIFFENER OR CONNECTOR PLATE CONNECTIONS

WELD TERMINATION DETAILS

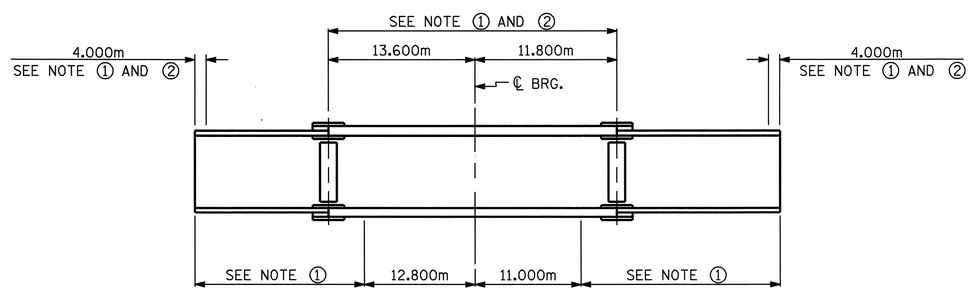

NOTE ①: CHARPY V-NOTCH TESTS ARE REQUIRED FOR ALL TOP OR BOTTOM FLANGE PLATES WHICH FALL WITHIN THESE LIMITS, ALL WEB PLATES, AND ALL SPLICE PLATES. IF A PERMITTED SHOP FLANGE SPLICE IS NOT USED, CHARPY V-NOTCH TESTS WILL BE REQUIRED FOR THE ENTIRE FLANGE PLATE. FOR CHARPY V-NOTCH TESTS, SEE ARTICLE 1072-9 OF THE STANDARD SPECIFICATIONS.

NOTE ②: NO WELDING OF FORMS OR FALSEWORK TO THE TOP FLANGE WILL BE PERMITTED IN THIS REGION.

CHARPY V-NOTCH TESTS FOR CONTINUOUS PLATE GIRDERS

PROJECT NO. R-0609IA
GUILFORD COUNTY
STATION: 52+65.808 -L-

SHEET 2 OF 3

STATE OF NORTH CAROLINA
DEPARTMENT OF TRANSPORTATION
RALEIGH

SUPERSTRUCTURE

STRUCTURAL STEEL DETAILS

(NORTHBOUND LANE)

NORTH CAROLINA PROFESSIONAL SEAL 23926 ENGINEER BRIAN C. HAWKS
5/22/06

REVISIONS						SHEET NO.
NO.	BY:	DATE:	NO.	BY:	DATE:	S-181
1			3			TOTAL SHEETS
2			4			321

DRAWN BY : P.C. BREWER/DGE DATE : 8/26/04
CHECKED BY : W.F. PARKER/ABN DATE : 11/03/04

15-MAY-2006 14:21
G:\STRUCT~1\frye\FINAL_~1\Str6\R07F03~1.DGN
dely

STR. #6

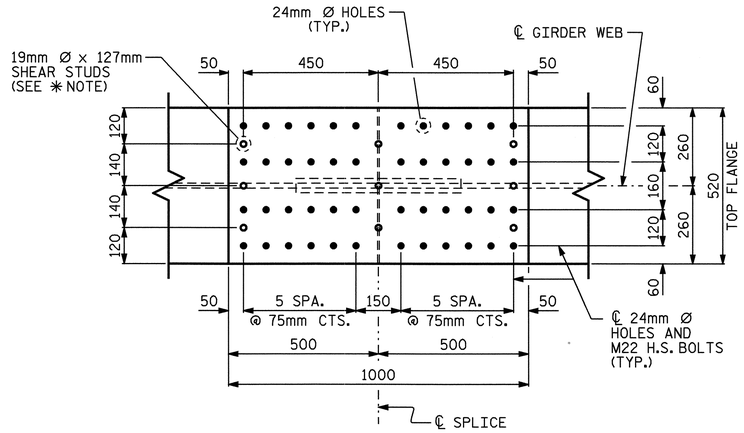

PLAN (TOP OF TOP FLANGE)

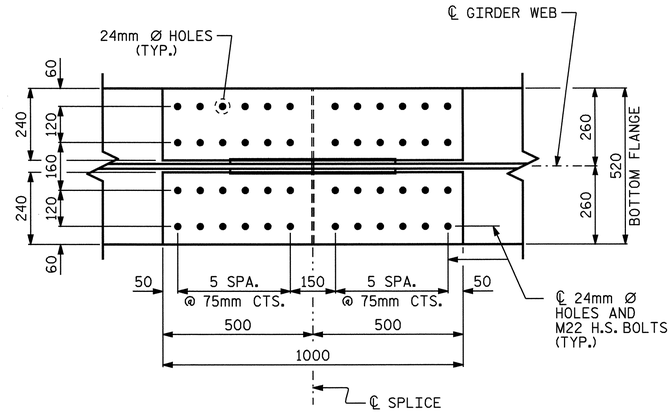

PLAN (TOP OF BOTTOM FLANGE)

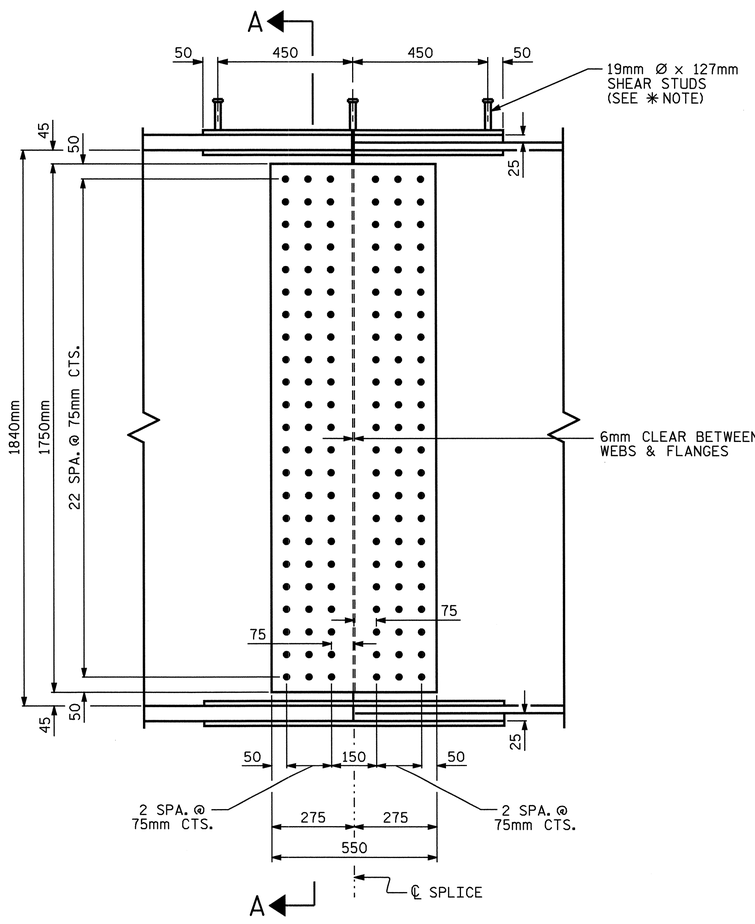

ELEVATION

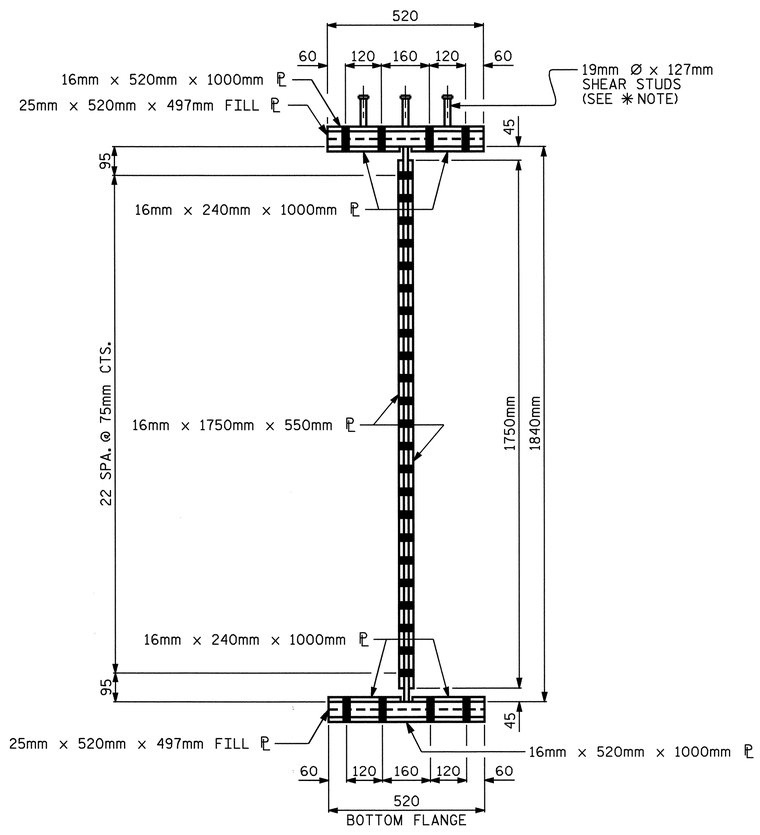

SECTION A-A

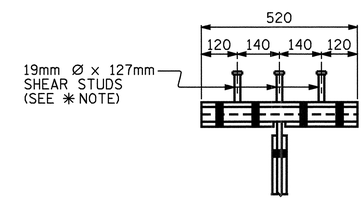

SHEAR STUD DETAIL
FOR TOP FLANGE SPLICE PLATE

NOTES:

ALL STRUCTURAL STEEL SHALL BE AASHTO M270 GRADE 345W AND PAINTED IN ACCORDANCE WITH SYSTEM 4 OF ARTICLE 442-7 OF THE STANDARD SPECIFICATIONS UNLESS OTHERWISE NOTED ON THE PLANS.

ALL DIMENSIONS SHOWN ARE HORIZONTAL OR VERTICAL, UNLESS OTHERWISE NOTED.

ALL FIELD CONNECTIONS TO BE 22.23mm HIGH STRENGTH BOLTS UNLESS OTHERWISE NOTED.

BEARING STIFFENERS ARE TO BE PLACED NORMAL TO THE WEB OF THE GIRDER AND SHALL BE PLUMB.

A CHARPY V-NOTCH TEST IS REQUIRED, SEE SHEET 2 OF 3.

SHOP SPLICES ARE PERMITTED TO LIMIT THE MAXIMUM REQUIRED FLANGE PIECE LENGTHS TO 18 METERS AND WEB PIECE LENGTHS TO 14 METERS. PERMITTED FLANGE AND WEB SHOP SPLICES SHALL NOT BE LOCATED WITHIN 4.5 METERS OF MAXIMUM DEAD LOAD DEFLECTION NOR WITHIN 4.5 METERS OF INTERMEDIATE BEARINGS OF CONTINUOUS UNITS. KEEP 600mm MINIMUM BETWEEN WEB AND FLANGE SHOP SPLICES. KEEP 150mm MINIMUM BETWEEN CONNECTOR PLATE OR TRANSVERSE STIFFENER WELDS AND WEB OR FLANGE SHOP SPLICES.

STUDS ON GIRDERS MAY BE SHIFTED UP TO 25mm IF NECESSARY TO CLEAR FLANGE SPLICE WELD.

END OF GIRDERS SHALL BE PLUMB.

✳ SHEAR STUDS ARE TO BE SHOP WELDED ON TOP OF PLATE BEFORE FIELD ASSEMBLY.

AT THE CONTRACTOR'S OPTION, THE DIAPHRAGM WITH THE WELDED GUSSET PLATES MAY BE USED IN LIEU OF THE DIAPHRAGM WITH BOLTED ANGLES AT NO ADDITIONAL COST TO THE DEPARTMENT.

TENSION ON THE AASHTO M164 BOLTS SHALL BE CALIBRATED USING DIRECT TENSION INDICATOR WASHERS IN ACCORDANCE WITH ARTICLE 440-10 OF THE STANDARD SPECIFICATIONS.

BEARING STIFFENER MAY REQUIRE COPING IF WIDER THAN BOTTOM FLANGE TO AVOID INTERFERENCE WITH THE ANCHOR BOLT.

TRANSVERSE STIFFENERS SHALL NOT BE PLACED ON THE OUTSIDE OF EXTERIOR GIRDERS.

BOLTED FIELD SPLICE DETAILS

(TYPICAL EACH FIELD SPLICE)

PROJECT NO. R-0609IA
GUILFORD COUNTY
STATION: 52+65.808 -L-

SHEET 3 OF 3

STATE OF NORTH CAROLINA
DEPARTMENT OF TRANSPORTATION
RALEIGH

SUPERSTRUCTURE
STRUCTURAL STEEL DETAILS
(NORTHBOUND LANE)

NORTH CAROLINA PROFESSIONAL SEAL 23926 ENGINEER BRIAN C. HANKS
5/22/06

REVISIONS								SHEET NO.
NO.	BY:	DATE:	NO.	BY:	DATE:			S-182
1			3					TOTAL SHEETS
2			4					321

DRAWN BY : P.C. BREWER/DGE DATE : 8/26/04
CHECKED BY : W.F. PARKER/ABN DATE : 11/03/04

STR. #6

NOTES

FOR ELASTOMERIC BEARINGS, SEE SPECIAL PROVISIONS.

— LOAD RATINGS —	
	MAX.D.L.+L.L.
TYPE III	512 kN

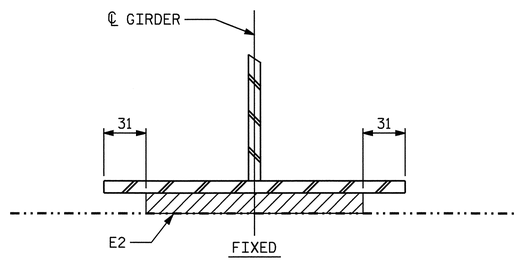

SECTION

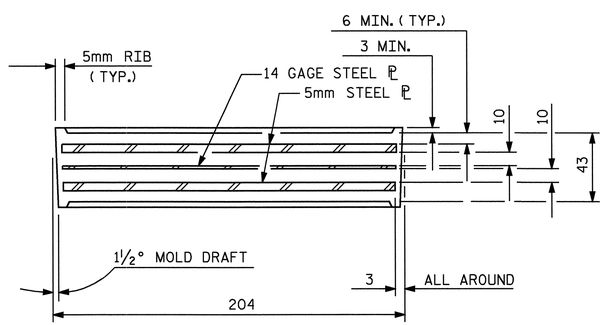

TYPICAL SECTION OF ELASTOMERIC BEARINGS

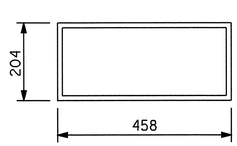

E2 (12 REQ'D)

PLAN VIEW OF ELASTOMERIC BEARING

TYPE III

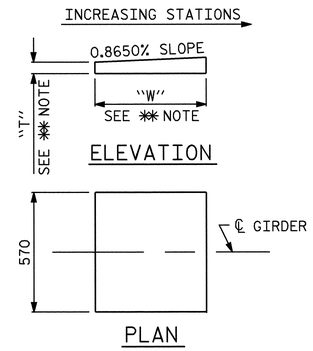

✱✱ NOTE:
DIMENSIONS "W" AND "T" ARE TO BE DETERMINED BY THE MANUFACTURER.

SOLE PLATE DETAILS

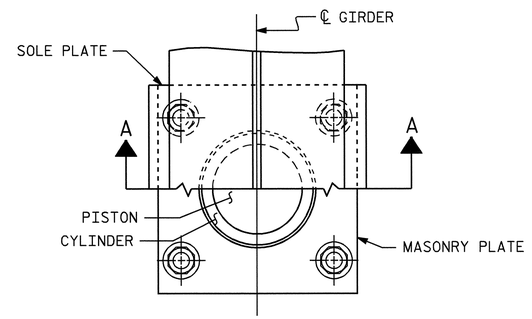

CUT-AWAY PLAN

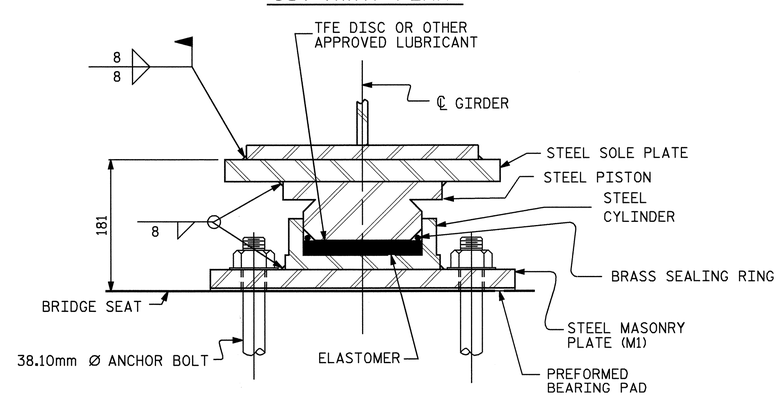

SECTION A-A

PB1, FIXED
(6 REQ'D.)

POT BEARING DETAILS

NOTES

FOR POT BEARINGS, SEE SPECIAL PROVISIONS.

AT ALL POINTS OF SUPPORT, NUTS FOR ANCHOR BOLTS SHALL BE TIGHTENED FINGER TIGHT AND GIVEN AN ADDITIONAL ¼ TURN. THE THREAD OF THE NUT AND BOLT SHALL THEN BE BURRED WITH A SHARP POINTED TOOL.

WHEN WELDING THE SOLE PLATE TO THE GIRDER, USE TEMPERATURE INDICATING WAX PENS, OR OTHER SUITABLE MEANS, TO ENSURE THAT THE TEMPERATURE OF THE BEARING DOES NOT EXCEED 121°C TEMPERATURES ABOVE THIS MAY DAMAGE THE TFE OR ELASTOMER.

ALL SURFACES OF BEARING PLATES SHALL BE SMOOTH AND STRAIGHT.

FOR THERMAL SPRAYED COATINGS (METALLIZATION), SEE SPECIAL PROVISIONS.

THE CONTRACTOR MAY SUBSTITUTE DISC BEARINGS FOR THE POT BEARINGS SHOWN. FOR OPTIONAL DISC BEARINGS, SEE SPECIAL PROVISIONS.

SOLE PLATES SHALL BE WELDED TO THE GIRDER FLANGES BEFORE FALSEWORK IS PLACED.

TABLE FOR LOADS					
BEARING	LOCATION	VERTICAL LOAD (kN)			LATERAL LOAD (kN)
		DEAD	LIVE	TOTAL	
PB1 (FIXED)	BENT 1	1730	620	2350	346

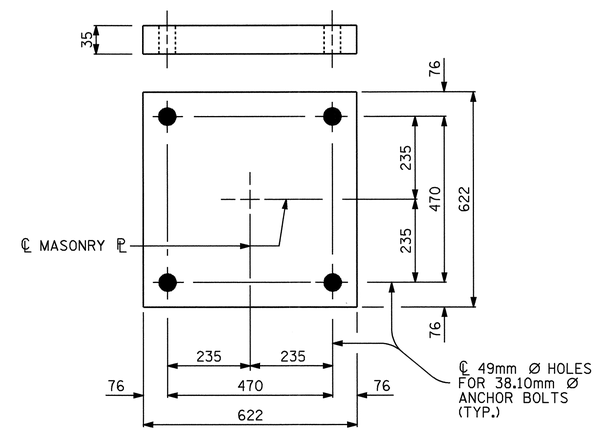

PLAN
M1 (6 REQ'D.)

MASONRY PLATE DETAILS

PROJECT NO. R-0609IA
GUILFORD COUNTY
STATION: 52+65.808 -L-

STATE OF NORTH CAROLINA
DEPARTMENT OF TRANSPORTATION
RALEIGH

SUPERSTRUCTURE

BEARING DETAILS

(NORTHBOUND LANE)

NORTH CAROLINA PROFESSIONAL SEAL 23926 ENGINEER BRIAN C. HANKS
5/22/06

REVISIONS								SHEET NO.
NO.	BY:	DATE:	NO.	BY:	DATE:			S-183
1			3					TOTAL SHEETS
2			4					321

DRAWN BY : P.C. BREWER/DGE DATE : 9/1/04
CHECKED BY : W.F. PARKER/ABN DATE : 11/03/04

15-MAY-2006 14:20
G:\STRUCT~1\frye\FINAL_~1\Str6\R0609I~4.DGN
dely

STR. #6

DEAD LOAD DEFLECTION TABLE FOR GIRDERS

GIRDER #1

TWENTIETH POINTS	SPAN "A" BRG.	.05	.10	.15	.20	.25	.30	.35	.40	.45	.50	.55	.60	.65	.70	.75	.80	.85	.90	.95	BRG.
DEFLECTION DUE TO WEIGHT OF GIRDER	0.000	0.002	0.003	0.005	0.006	0.007	0.008	0.008	0.008	0.008	0.007	0.007	0.006	0.005	0.004	0.003	0.002	0.001	0.000	0.000	0.000
DEFLECTION DUE TO WEIGHT OF SLAB ✳	0.000	0.006	0.012	0.016	0.020	0.024	0.026	0.028	0.028	0.027	0.026	0.023	0.019	0.017	0.012	0.008	0.005	0.003	0.001	0.000	0.000
DEFLECTION DUE TO WEIGHT OF RAIL	0.000	0.000	0.001	0.001	0.002	0.002	0.002	0.002	0.002	0.002	0.002	0.002	0.002	0.001	0.001	0.001	0.001	0.000	0.000	0.000	0.000
TOTAL DEAD LOAD DEFLECTION	0.000	0.008	0.016	0.022	0.028	0.033	0.036	0.038	0.038	0.037	0.035	0.032	0.027	0.023	0.017	0.012	0.008	0.004	0.001	0.000	0.000
REQUIRED CAMBER	0	8	16	22	28	33	36	38	38	37	35	32	27	23	17	12	8	4	1	0	0

TWENTIETH POINTS	SPAN "B" BRG.	.05	.10	.15	.20	.25	.30	.35	.40	.45	.50	.55	.60	.65	.70	.75	.80	.85	.90	.95	BRG.
DEFLECTION DUE TO WEIGHT OF GIRDER	0.000	0.001	0.002	0.003	0.004	0.006	0.008	0.009	0.011	0.012	0.013	0.013	0.013	0.013	0.012	0.011	0.009	0.007	0.005	0.003	0.000
DEFLECTION DUE TO WEIGHT OF SLAB ✳	0.000	0.002	0.005	0.010	0.017	0.022	0.029	0.035	0.040	0.045	0.048	0.050	0.050	0.049	0.046	0.041	0.036	0.028	0.020	0.009	0.000
DEFLECTION DUE TO WEIGHT OF RAIL	0.000	0.000	0.001	0.001	0.001	0.002	0.002	0.003	0.003	0.003	0.003	0.004	0.004	0.003	0.003	0.003	0.002	0.002	0.001	0.001	0.000
TOTAL DEAD LOAD DEFLECTION	0.000	0.003	0.008	0.014	0.022	0.030	0.039	0.047	0.054	0.060	0.064	0.067	0.067	0.065	0.061	0.055	0.047	0.037	0.026	0.013	0.000
REQUIRED CAMBER	0	3	8	14	22	30	39	47	54	60	64	67	67	65	61	55	47	37	26	13	0

GIRDERS #2, #3, #4, & #5

TWENTIETH POINTS	SPAN "A" BRG.	.05	.10	.15	.20	.25	.30	.35	.40	.45	.50	.55	.60	.65	.70	.75	.80	.85	.90	.95	BRG.
DEFLECTION DUE TO WEIGHT OF GIRDER	0.000	0.002	0.003	0.005	0.006	0.007	0.008	0.008	0.009	0.008	0.008	0.007	0.006	0.005	0.004	0.003	0.002	0.001	0.000	0.000	0.000
DEFLECTION DUE TO WEIGHT OF SLAB ✳	0.000	0.007	0.014	0.019	0.025	0.028	0.031	0.033	0.032	0.032	0.030	0.027	0.024	0.019	0.015	0.010	0.006	0.003	0.001	0.000	0.000
DEFLECTION DUE TO WEIGHT OF RAIL	0.000	0.000	0.001	0.001	0.001	0.002	0.002	0.002	0.002	0.002	0.002	0.002	0.001	0.001	0.001	0.001	0.001	0.000	0.000	0.000	0.000
TOTAL DEAD LOAD DEFLECTION	0.000	0.009	0.018	0.025	0.032	0.037	0.041	0.043	0.043	0.042	0.040	0.036	0.031	0.025	0.020	0.014	0.009	0.004	0.001	0.000	0.000
REQUIRED CAMBER	0	9	18	25	32	37	41	43	43	42	40	36	31	25	20	14	9	4	1	0	0

TWENTIETH POINTS	SPAN "B" BRG.	.05	.10	.15	.20	.25	.30	.35	.40	.45	.50	.55	.60	.65	.70	.75	.80	.85	.90	.95	BRG.
DEFLECTION DUE TO WEIGHT OF GIRDER	0.000	0.001	0.002	0.003	0.005	0.006	0.008	0.010	0.011	0.012	0.013	0.014	0.014	0.014	0.013	0.012	0.010	0.008	0.005	0.003	0.000
DEFLECTION DUE TO WEIGHT OF SLAB ✳	0.000	0.002	0.006	0.012	0.019	0.026	0.034	0.041	0.047	0.053	0.057	0.058	0.059	0.057	0.053	0.047	0.041	0.032	0.023	0.011	0.000
DEFLECTION DUE TO WEIGHT OF RAIL	0.000	0.000	0.001	0.001	0.001	0.002	0.002	0.002	0.003	0.003	0.003	0.003	0.003	0.003	0.003	0.003	0.002	0.002	0.001	0.001	0.000
TOTAL DEAD LOAD DEFLECTION	0.000	0.003	0.009	0.016	0.025	0.034	0.044	0.053	0.061	0.068	0.073	0.075	0.076	0.074	0.069	0.062	0.053	0.042	0.029	0.015	0.000
REQUIRED CAMBER	0	3	9	16	25	34	44	53	61	68	73	75	76	74	69	62	53	42	29	15	0

GIRDER #6

TWENTIETH POINTS	SPAN "A" BRG.	.05	.10	.15	.20	.25	.30	.35	.40	.45	.50	.55	.60	.65	.70	.75	.80	.85	.90	.95	BRG.
DEFLECTION DUE TO WEIGHT OF GIRDER	0.000	0.002	0.003	0.005	0.006	0.007	0.008	0.008	0.008	0.008	0.007	0.007	0.006	0.005	0.004	0.003	0.002	0.001	0.000	0.000	0.000
DEFLECTION DUE TO WEIGHT OF SLAB ✳	0.000	0.006	0.012	0.016	0.020	0.024	0.026	0.028	0.028	0.027	0.026	0.023	0.019	0.017	0.012	0.008	0.005	0.003	0.001	0.000	0.000
DEFLECTION DUE TO WEIGHT OF RAIL	0.000	0.000	0.001	0.001	0.002	0.002	0.002	0.002	0.002	0.002	0.002	0.002	0.002	0.001	0.001	0.001	0.001	0.000	0.000	0.000	0.000
TOTAL DEAD LOAD DEFLECTION	0.000	0.008	0.016	0.022	0.028	0.033	0.036	0.038	0.038	0.037	0.035	0.032	0.027	0.023	0.017	0.012	0.008	0.004	0.001	0.000	0.000
REQUIRED CAMBER	0	8	16	22	28	33	36	38	38	37	35	32	27	23	17	12	8	4	1	0	0

TWENTIETH POINTS	SPAN "B" BRG.	.05	.10	.15	.20	.25	.30	.35	.40	.45	.50	.55	.60	.65	.70	.75	.80	.85	.90	.95	BRG.
DEFLECTION DUE TO WEIGHT OF GIRDER	0.000	0.001	0.002	0.003	0.004	0.006	0.008	0.009	0.011	0.012	0.013	0.013	0.013	0.013	0.012	0.011	0.009	0.007	0.005	0.003	0.000
DEFLECTION DUE TO WEIGHT OF SLAB ✳	0.000	0.002	0.005	0.010	0.017	0.022	0.029	0.035	0.040	0.045	0.048	0.050	0.050	0.049	0.046	0.041	0.036	0.028	0.020	0.009	0.000
DEFLECTION DUE TO WEIGHT OF RAIL	0.000	0.000	0.001	0.001	0.001	0.002	0.002	0.003	0.003	0.003	0.003	0.004	0.004	0.003	0.003	0.003	0.002	0.002	0.001	0.001	0.000
TOTAL DEAD LOAD DEFLECTION	0.000	0.003	0.008	0.014	0.022	0.030	0.039	0.047	0.054	0.060	0.064	0.067	0.067	0.065	0.061	0.055	0.047	0.037	0.026	0.013	0.000
REQUIRED CAMBER	0	3	8	14	22	30	39	47	54	60	64	67	67	65	61	55	47	37	26	13	0

✳ INCLUDES SLAB, BUILDUPS & STAY-IN-PLACE FORMS.
ALL VALUES ARE SHOWN IN METERS, EXCEPT "REQUIRED CAMBER" WHICH IS SHOWN IN MILLIMETERS.

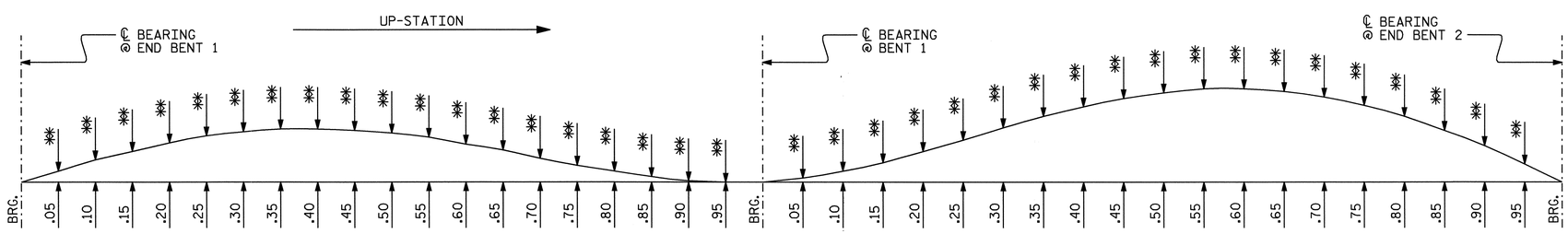

✳✳ FOR CAMBER AT TWENTIETH POINTS, SEE TABLES.

SCHEMATIC CAMBER ORDINATES

PROJECT NO. R-0609IA
GUILFORD COUNTY
STATION: 52+65.808 -L-

STATE OF NORTH CAROLINA
DEPARTMENT OF TRANSPORTATION
RALEIGH

SUPERSTRUCTURE
DEAD LOAD DEFLECTIONS
(NORTHBOUND LANE)

NORTH CAROLINA PROFESSIONAL SEAL 23926 ENGINEER BRIAN C. HAWKS
5/22/06

REVISIONS						SHEET NO.
NO.	BY:	DATE:	NO.	BY:	DATE:	S-184
1			3			TOTAL SHEETS
2			4			321

DRAWN BY : P.C. BREWER/DGE DATE : 9/1/04
CHECKED BY : W.F. PARKER/ABN DATE : 11/03/04

15-MAY-2006 14:20
G:\STRUCT~1\frye\FINAL_~1\Str6\ROBDE2~1.DGN
dely

STR. #6

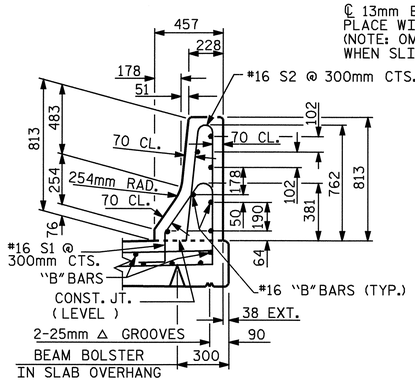

SECTION THRU RAIL

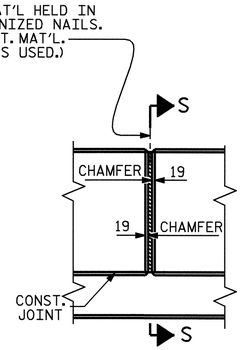

ELEVATION AT EXPANSION JOINTS

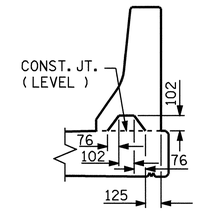

SECTION S-S

AT DAM IN OPEN JOINT (THIS IS TO BE USED ONLY WHEN SLIP FORM IS USED)

BARRIER RAIL DETAILS

NOTES

THE BARRIER RAIL IN A CONTINUOUS UNIT SHALL NOT BE CAST UNTIL ALL SLAB CONCRETE IN THE UNIT HAS BEEN CAST AND HAS REACHED A MINIMUM COMPRESSIVE STRENGTH OF 20.7 MPa.

ALL REINFORCING STEEL IN BARRIER RAILS SHALL BE EPOXY COATED.

VERTICAL GROOVED CONTRACTION JOINTS, 12mm IN DEPTH, SHALL BE TOOLED IN ALL EXPOSED FACES OF THE BARRIER RAIL AND IN ACCORDANCE WITH ARTICLE 825-10(B) OF THE STANDARD SPECIFICATIONS. THE CONTRACTION JOINT SHALL BE LOCATED AT EACH THIRD POINT BETWEEN BARRIER RAIL EXPANSION JOINTS. ONLY ONE CONTRACTION JOINT IS REQUIRED AT MIDPOINT OF BARRIER RAIL SEGMENTS LESS THAN 6.1m IN LENGTH AND NO CONTRACTION JOINTS ARE REQUIRED FOR THOSE SEGMENTS LESS THAN 3.5m IN LENGTH.

THE #16 S1 & #16 S2 BARS MAY BE SHIFTED SLIGHTLY AS NECESSARY IN ORDER TO MAINTAIN 50mm CLEARANCE FROM THE 13mm EXPANSION JOINT MATERIAL IN THE BARRIER RAIL.

BAR TYPES

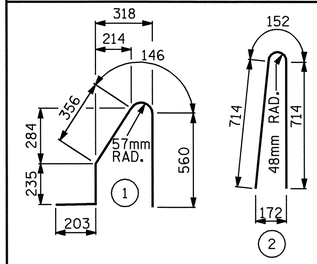

ALL BAR DIMENSIONS ARE OUT TO OUT

BILL OF MATERIAL

BAR	NO.	SIZE	TYPE	LENGTH	WEIGHT
✳ B1	14	#16	STR	3840	83
✳ B2	112	#16	STR	8900	1547
✳ B3	14	#16	STR	7040	153
✳ S1	554	#16	1	1500	1290
✳ S2	554	#16	2	1580	1358

✳ EPOXY COATED REINFORCING STEEL	4,431 kg
CLASS AA CONCRETE	41.7 CU. METER
CONCRETE BARRIER RAIL	166.180m

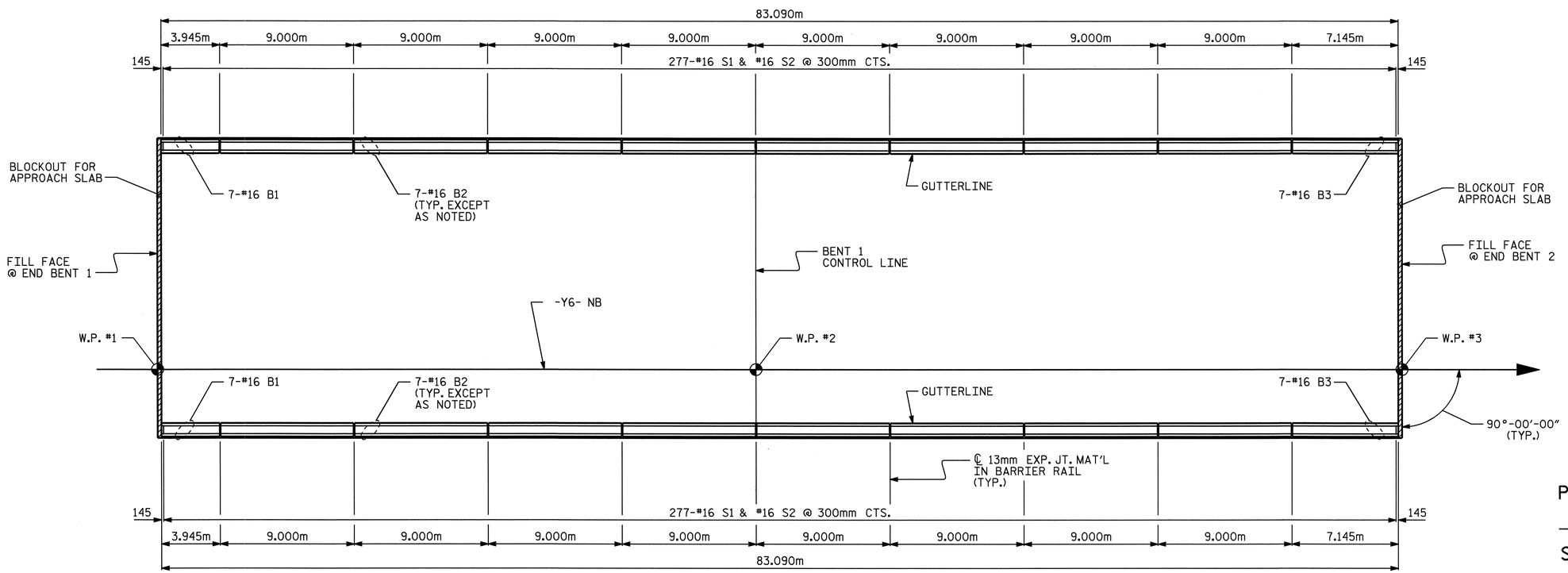

PLAN OF BARRIER RAIL

PROJECT NO. R-0609IA
GUILFORD COUNTY
STATION: 52+65.808 -L-

STATE OF NORTH CAROLINA
DEPARTMENT OF TRANSPORTATION
RALEIGH

SUPERSTRUCTURE
CONCRETE BARRIER RAIL
(NORTHBOUND LANE)

NORTH CAROLINA PROFESSIONAL SEAL 23926 ENGINEER BRIAN C. HANKS
5/22/06

REVISIONS							SHEET NO.
NO.	BY:	DATE:	NO.	BY:	DATE:		S-185
1			3				TOTAL SHEETS
2			4				321

ASSEMBLED BY P.C. BREWER/DGE DATE : 9/1/04
CHECKED BY : W.F. PARKER/ABN DATE :11/03/04

DRAWN BY : ARB 5/87
CHECKED BY : SJD 9/87

REV. 8/16/99 RWW/LES
REV. 10/17/00 RWW/LES
REV. 5/7/03R RWW/JTE

15-MAY-2006 14:19
G:\STRUCT~1\frye\FINAL_~1\Str6\R03FAI~1.DGN
dely

STD. No. CBR1SM

STR. #6

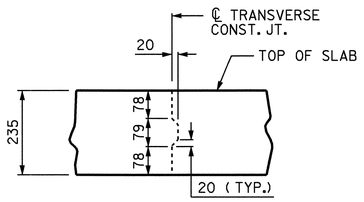

TRANSVERSE CONST. JT. DETAIL

NOTE: REINFORCING STEEL IN SLAB NOT SHOWN. LONGITUDINAL REINFORCING STEEL SHALL BE CONTINUOUS THRU JOINT.

SUPERSTRUCTURE REINFORCING STEEL LENGTHS ARE BASED ON THE FOLLOWING MINIMUM SPLICE LENGTHS

BAR SIZE	SUPERSTRUCTURE EXCEPT APPROACH SLABS, PARAPET, AND BARRIER RAIL		APPROACH SLABS		PARAPET AND BARRIER RAIL
	EPOXY COATED	UNCOATED	EPOXY COATED	UNCOATED	
#13	610	540	610	540	840
#16	770	660	770	660	1050
#19	920	790	1190	790	1330
#22	1580	1060			
#25	2080	1390			

GROOVING BRIDGE FLOORS

APPROACH SLABS	260.3m²
BRIDGE DECK	1,419.2m²
TOTAL	1,679.5m²

BILL OF MATERIAL

BAR	NO.	SIZE	TYPE	LENGTH	WEIGHT
* A1	1108	16	STR	9840	16921
A2	1108	16	STR	9780	16818
* B1	123	13	STR	8920	1091
* B2	243	22	STR	11060	8176
* B3	164	13	STR	7640	1245
* B4	20	13	STR	8860	176
B5	390	16	STR	17140	10374
* D1	162	22	STR	10000	4928
H1	14	29	4	4800	340
H2	28	29	4	5920	839
H3	14	29	4	3220	228
K1	48	16	STR	10780	803
K2	8	16	STR	900	11
* S1	116	13	1	3520	406
* S2	116	13	2	2500	288
U1	112	16	3	4500	782
V1	54	22	STR	2140	350
V2	16	16	STR	2140	53
V3	42	22	STR	2160	276
V4	16	16	STR	2160	54

REINFORCING STEEL 30,929 kg

* EPOXY COATED REINFORCING STEEL 33,231 kg

BAR TYPES

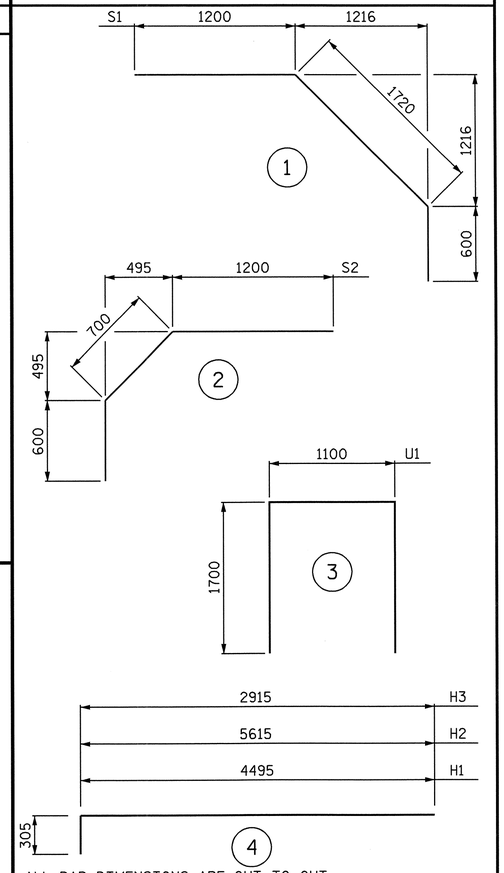

ALL BAR DIMENSIONS ARE OUT TO OUT.

SUPERSTRUCTURE BILL OF MATERIAL

NORTHBOUND LANE	CLASS AA CONCRETE	REINFORCING STEEL	EPOXY COATED REINFORCING STEEL
	(m3)	(Kg)	(Kg)
SPANS "A" & "B"		30,929	33,231
POUR #1	120.9		
POUR #2	115.2		
POUR #3	176.4		
POUR #4	118.9		
TOTALS	531.4	30,929	33,231

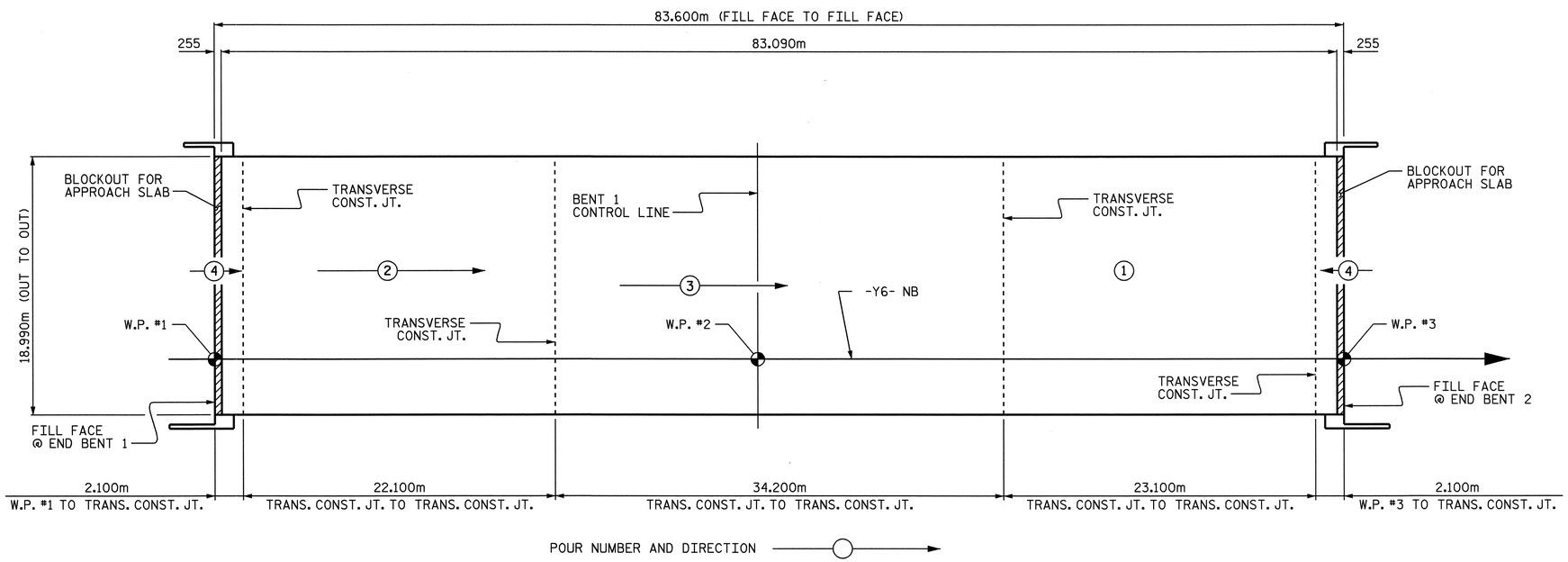

POURING SEQUENCE AND LAYOUT FOR COMPUTING AREA OF REINFORCED CONCRETE DECK SLAB (SQ. METER = 1,587.6)

PROJECT NO. R-0609IA
GUILFORD COUNTY
STATION: 52+65.808 -L-

STATE OF NORTH CAROLINA
DEPARTMENT OF TRANSPORTATION
RALEIGH

SUPERSTRUCTURE
BILL OF MATERIAL
(NORTHBOUND LANE)

NORTH CAROLINA PROFESSIONAL SEAL 23926 ENGINEER BRIAN C. HANKS
11/9/06

REVISIONS						
NO.	BY:	DATE:	NO.	BY:	DATE:	
1			3			
2			4			

SHEET NO. S-186
TOTAL SHEETS 321

DRAWN BY : P.C. BREWER/DGE DATE : 9/2/04
CHECKED BY : W.F. PARKER/ABN DATE : 11/03/04

09-NOV-2006 14:14
R:\Structures\frye\FINAL_PLANS\Str6\R0609IA_sd_BM_STR.6REV.dgn
bhanks

STR. #6

NOTES:

FOR PILE SPLICE DETAILS, SEE SHEET 2 OF 2.

FOR TEMPORARY DRAINAGE DETAILS, SEE SHEET 2 OF 2.

THE CONTRACTOR SHALL PROVIDE FOR INSTALLATION OF THE 102mm DIAMETER DRAIN PIPE THROUGH THE WING WALL AS REQUIRED FOR REINFORCED BRIDGE APPROACH FILLS, SEE THE ROADWAY PLANS. REINFORCING STEEL IN THE WING WALL MAY BE SHIFTED AS NECESSARY TO CLEAR THE DRAIN PIPE.

THE TOP SURFACE OF THE END BENT CAP AND WINGS, EXCLUDING THE OUTSIDE 4" AND THE BEARING AREA, SHALL BE RAKED TO A DEPTH OF 1/4".

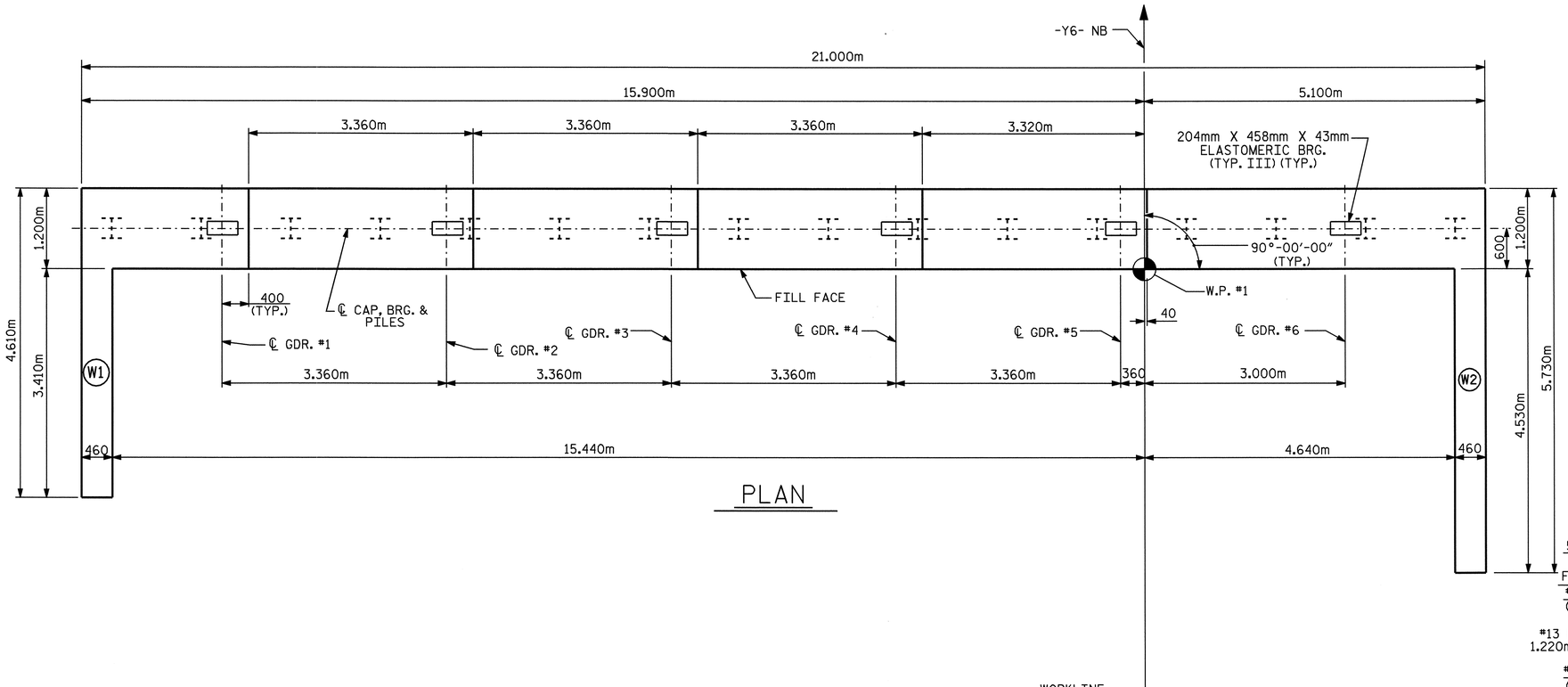

PLAN

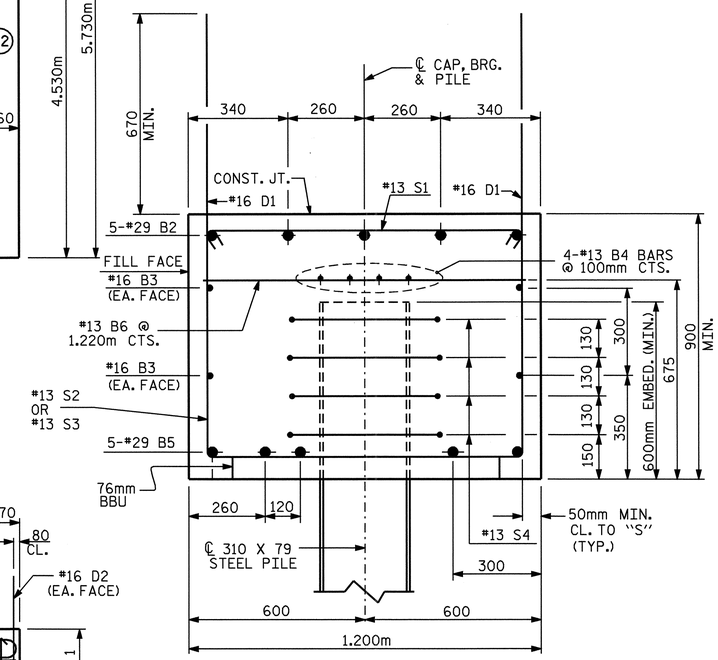

SECTION A-A

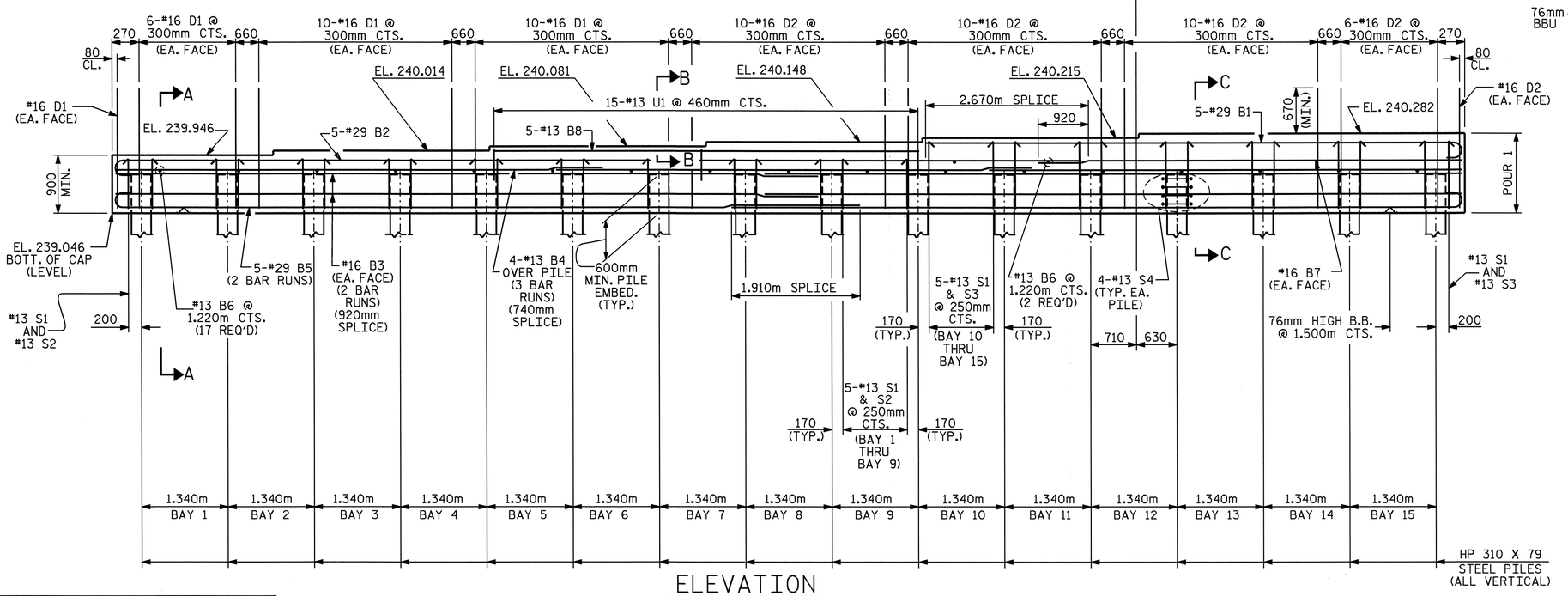

ELEVATION

(WINGS NOT SHOWN FOR CLARITY)
(FOR WING REINFORCING STEEL AND DETAILS, SEE SHEET 2 OF 2)

NORTH CAROLINA PROFESSIONAL SEAL 23926 ENGINEER BRIAN C. HANKS
5/22/06

PROJECT NO. R-0609IA
GUILFORD COUNTY
STATION: 52+65.808 -L-

SHEET 1 OF 2

STATE OF NORTH CAROLINA
DEPARTMENT OF TRANSPORTATION
RALEIGH

SUBSTRUCTURE

END BENT 1

REVISIONS							SHEET NO.
NO.	BY:	DATE:	NO.	BY:	DATE:		S-187
1			3				TOTAL SHEETS
2			4				321

STR. #6

DRAWN BY : QT NGUYEN DATE : 2-05
CHECKED BY : RW WRIGHT DATE : 3-05

15-MAY-2006 14:18
G:\STRUCT~1\frye\FINAL_~1\str6\R0B030~1.DGN
dely

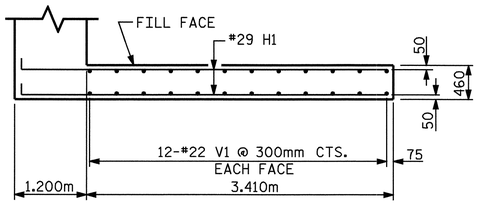

PLAN OF WING W1

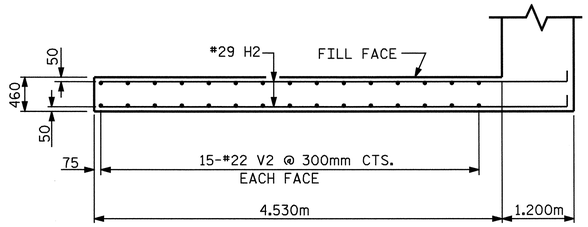

PLAN OF WING W2

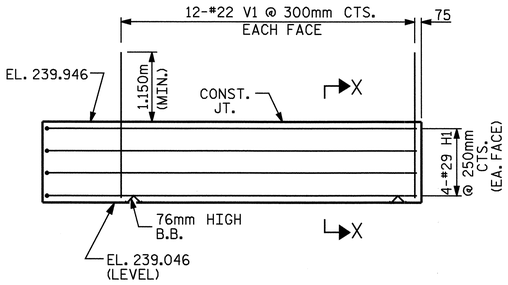

ELEVATION OF WING W1

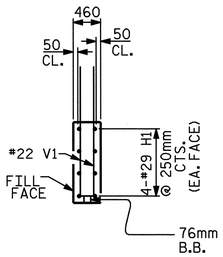

SECTION X-X

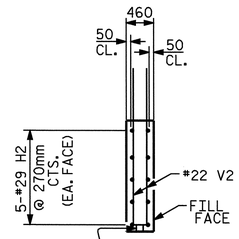

SECTION Y-Y

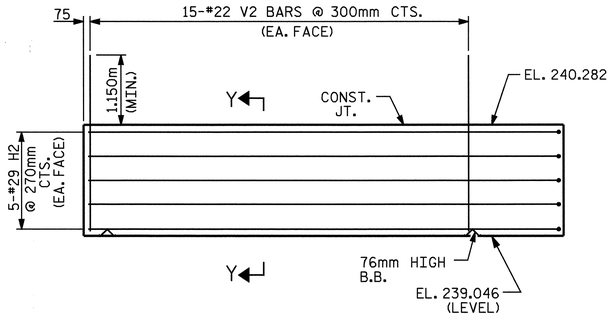

ELEVATION OF WING W2

BAR TYPES

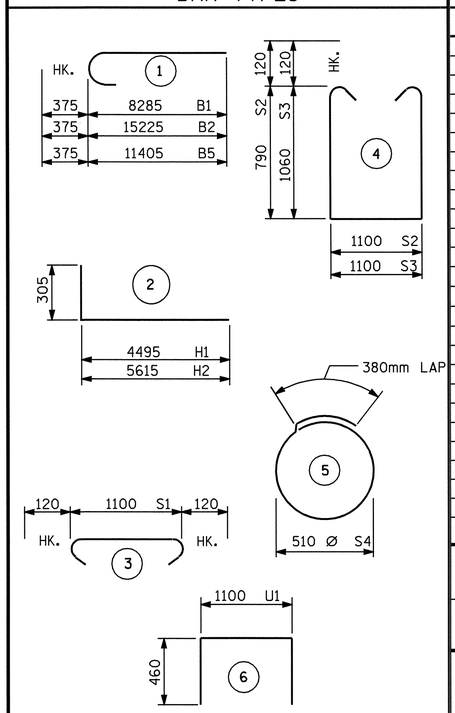

ALL BAR DIMENSIONS ARE OUT TO OUT.

BILL OF MATERIAL
END BENT 1

BAR	NO.	SIZE	TYPE	LENGTH	WEIGHT
B1	5	#29	1	8660	219
B2	5	#29	1	15600	395
B3	8	#16	STR	10900	135
B4	12	#13	STR	7460	89
B5	10	#29	1	11780	596
B6	19	#13	STR	1100	21
B7	2	#16	STR	6540	20
B8	5	#13	STR	6720	33
D1	54	#16	STR	1640	137
D2	74	#16	STR	1840	211
H1	8	#29	2	4800	194
H2	10	#29	2	5920	300
S1	77	#13	3	1340	103
S2	46	#13	4	2920	134
S3	31	#13	4	3460	107
S4	64	#13	5	1980	126
U1	15	#13	6	2020	30
V1	24	#22	STR	1980	145
V2	30	#22	STR	2320	212

REINFORCING STEEL = 3207 KG

CLASS A CONCRETE BREAKDOWN
POUR #1: CAP & LOWER WINGS 31.4 M3

TOTAL CONCRETE 31.4 M3

HP 310 X 79 STEEL PILES
NO. 16 96.0 METERS

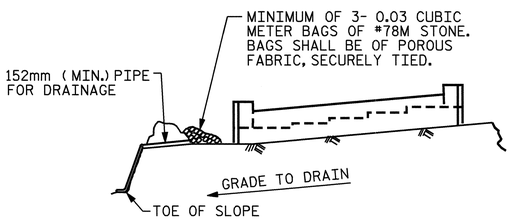

BAGGED STONE AND PIPE SHALL BE PLACED IMMEDIATELY AFTER COMPLETION OF END BENT EXCAVATION. PIPE MAY BE EITHER CONCRETE, CORRUGATED STEEL, CORRUGATED ALUMINUM ALLOY, OR CORRUGATED PLASTIC. PERFORATED PIPE WILL NOT BE ALLOWED.

BAGGED STONE SHALL REMAIN IN PLACE UNTIL THE ENGINEER DIRECTS THAT IT BE REMOVED. THE CONTRACTOR SHALL REMOVE AND DISPOSE OF SILT ACCUMULATIONS AT BAGGED STONE WHEN SO DIRECTED BY THE ENGINEER. BAGS SHALL BE REMOVED AND REPLACED WHENEVER THE ENGINEER DETERMINES THAT THEY HAVE DETERIORATED AND LOST THEIR EFFECTIVENESS.

NO SEPARATE PAYMENT WILL BE MADE FOR THIS WORK AND THE ENTIRE COST OF THIS WORK SHALL BE INCLUDED IN THE UNIT CONTRACT PRICE BID FOR THE SEVERAL PAY ITEMS.

TEMPORARY DRAINAGE AT END BENT

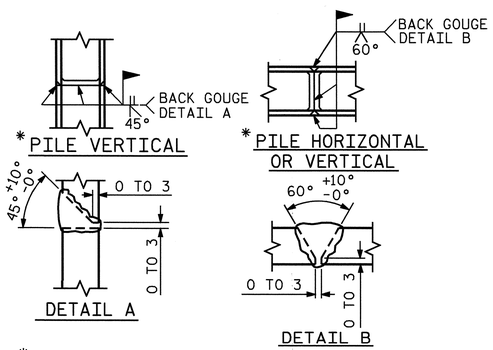

*POSITION OF PILE DURING WELDING.

PILE SPLICE DETAILS

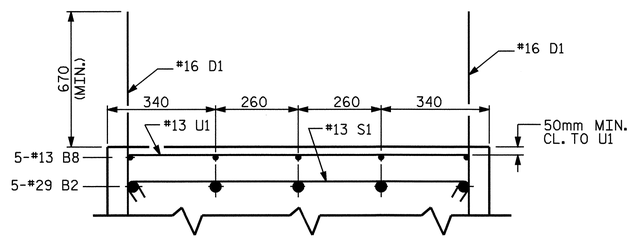

PARTIAL SECTION B-B

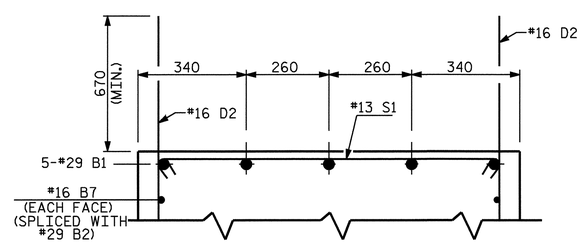

PARTIAL SECTION C-C

PROJECT NO. R-0609IA
GUILFORD COUNTY
STATION: 52+65.808 -L-

SHEET 2 OF 2

STATE OF NORTH CAROLINA
DEPARTMENT OF TRANSPORTATION
RALEIGH

SUBSTRUCTURE
END BENT 1

NORTH CAROLINA PROFESSIONAL SEAL 23926 ENGINEER BRIAN C. HANNAS
5/22/06

REVISIONS						
NO.	BY:	DATE:	NO.	BY:	DATE:	
1			3			
2			4			

SHEET NO. S-188
TOTAL SHEETS 321

STR. #6

DRAWN BY : QT NGUYEN DATE : 02-05
CHECKED BY : RW WRIGHT DATE : 03-05

15-MAY-2006 14:18
G:\STRUCT~1\frye\FINAL_~1\Str6\ROB030~1.DGN
dely

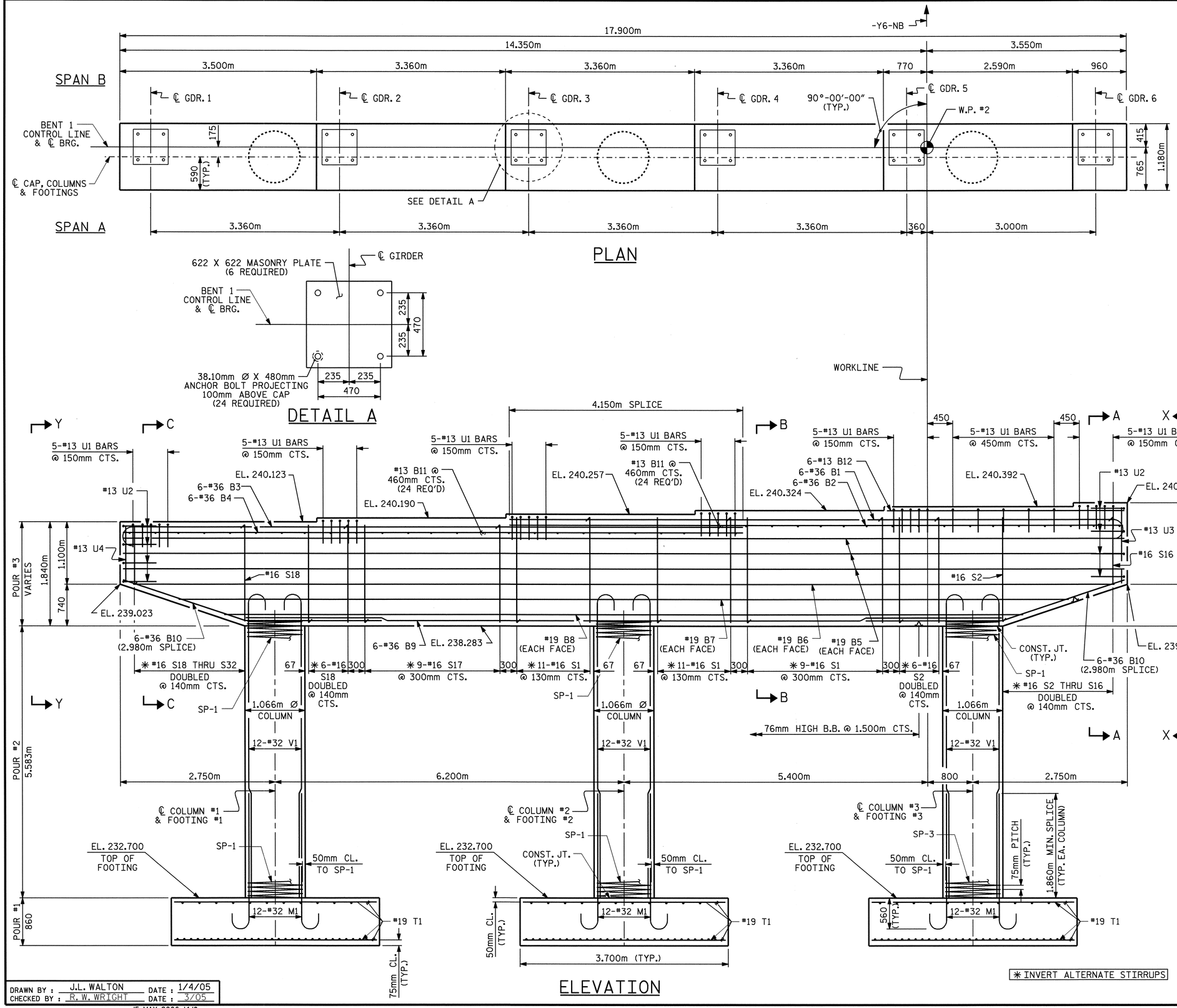

NOTES

STIRRUPS IN CAP MAY BE SHIFTED AS NECESSARY TO CLEAR ANCHOR BOLTS.

HOOKS ON "V" BARS MAY BE TURNED AS NECESSARY FOR PLACING REINFORCING STEEL.

THE CONTRACTOR'S ATTENTION IS CALLED TO THE FACT THAT THE "M1" IS DETAILED WITH ONE METER OF EXTRA LENGTH..

THE CONTRACTOR'S ATTENTION IS CALLED TO THE FACT THAT THE CENTERLINE OF CAP, COLUMN & FOOTINGS IS OFFSET FROM THE CONTROL LINE OF BENT.

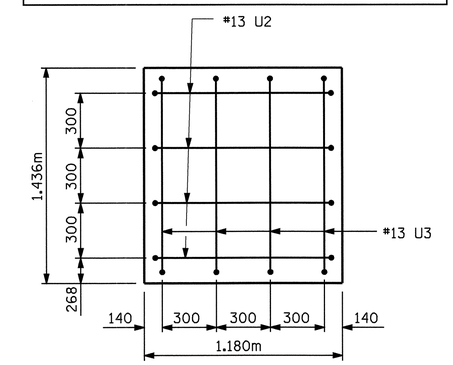

VIEW X-X

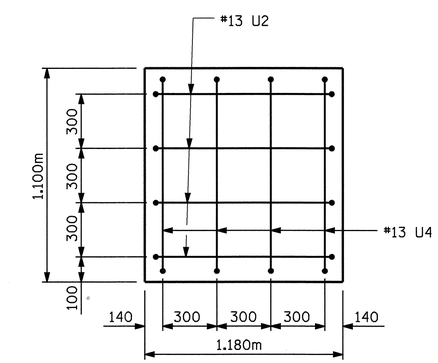

VIEW Y-Y

PROJECT NO. R-0609IA
GUILFORD COUNTY
STATION: 52+65.808 -L-

SHEET 1 OF 2

STATE OF NORTH CAROLINA
DEPARTMENT OF TRANSPORTATION
RALEIGH

SUBSTRUCTURE
BENT 1

NORTH CAROLINA PROFESSIONAL SEAL 23926 ENGINEER BRIAN C. HANKS
5/22/06

REVISIONS								SHEET NO.
NO.	BY:	DATE:	NO.	BY:	DATE:			S-189
1			3					TOTAL SHEETS
2			4					321

DRAWN BY : J.L. WALTON DATE : 1/4/05
CHECKED BY : R. W. WRIGHT DATE : 3/05

15-MAY-2006 14:18
G:\STRUCT~1\frye\FINAL_~1\Str6\R0609I~3.DGN
daly

STR #6

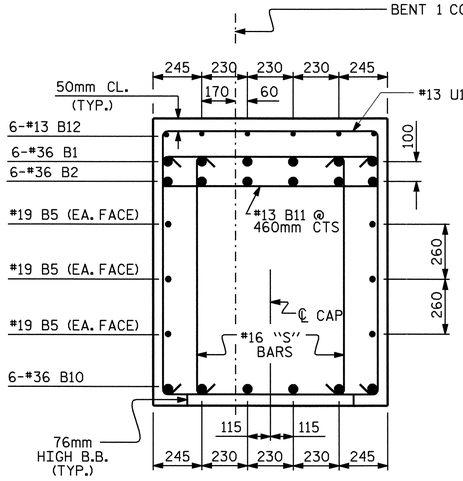

SECTION A-A

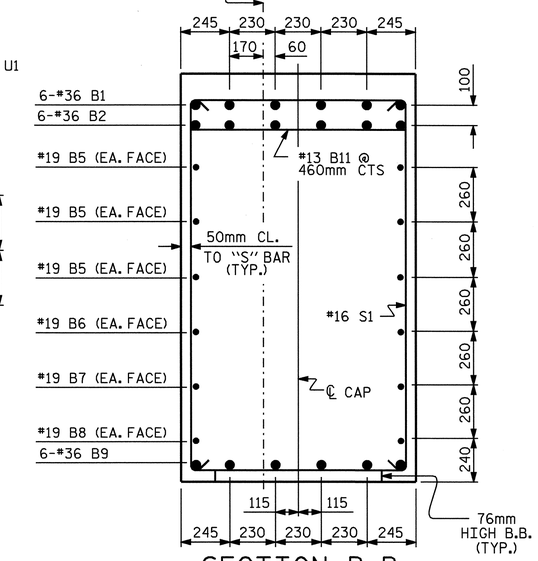

SECTION B-B

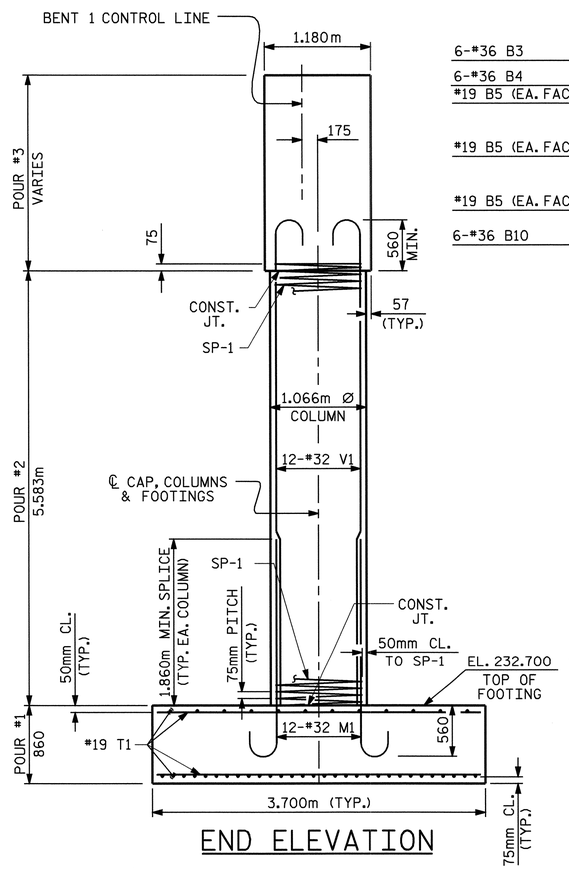

END ELEVATION

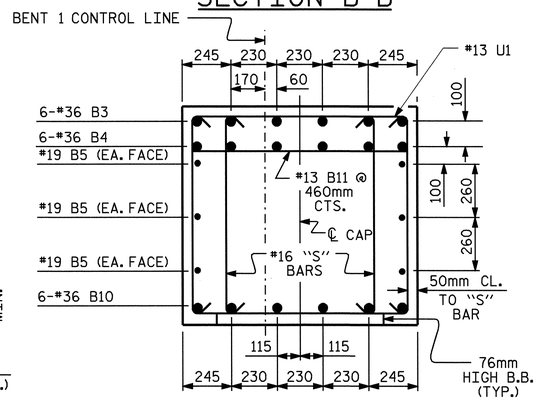

SECTION C-C

BAR TYPES

ALL DIMENSIONS ARE OUT TO OUT.

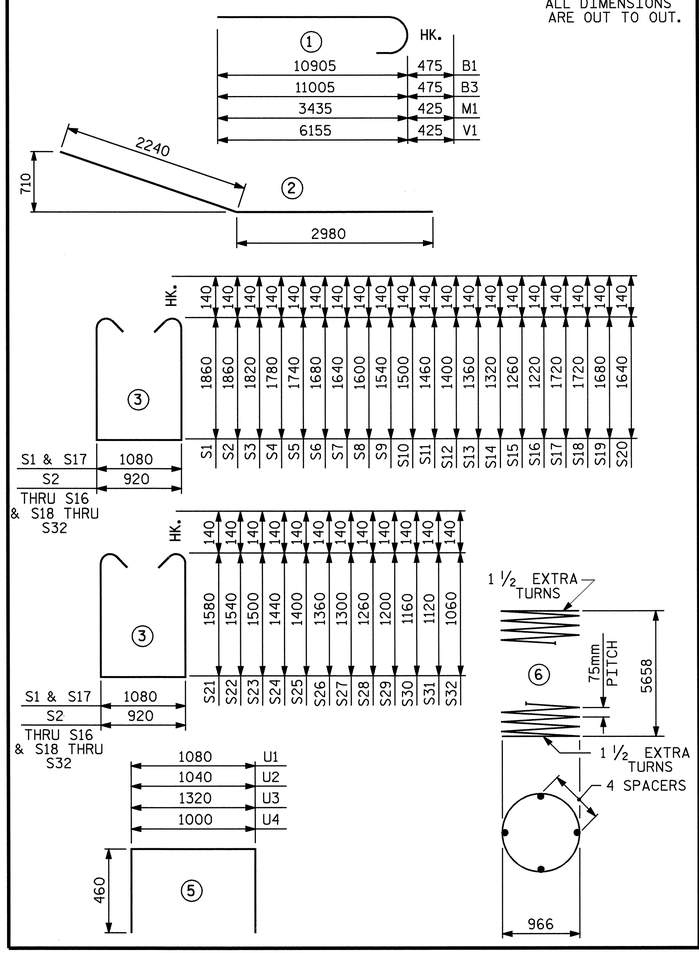

BILL OF MATERIAL BENT 1

BAR	NO.	SIZE	TYPE	LENGTH	WEIGHT
B1	6	#36	1	11380	540
B2	6	#36	STR	10900	517
B3	6	#36	1	11480	545
B4	6	#36	STR	11000	522
B5	6	#19	STR	17800	239
B6	2	#19	STR	17600	79
B7	2	#19	STR	16040	72
B8	2	#19	STR	14480	65
B9	6	#36	STR	13460	639
B10	12	#36	2	5220	495
B11	48	#13	STR	1080	52
B12	6	#13	STR	4220	25
M1	36	#32	1	3860	890
S1	31	#16	3	5080	244
S2	14	#16	3	4920	107
S3	2	#16	3	4840	15
S4	2	#16	3	4760	15
S5	2	#16	3	4680	15
S6	2	#16	3	4560	14
S7	2	#16	3	4480	14
S8	2	#16	3	4400	14
S9	2	#16	3	4280	13
S10	2	#16	3	4200	13
S11	2	#16	3	4120	13
S12	2	#16	3	4000	12
S13	2	#16	3	3920	12
S14	2	#16	3	3840	12
S15	2	#16	3	3720	12
S16	2	#16	3	3640	11
S17	9	#16	3	4800	67
S18	14	#16	3	4640	101
S19	2	#16	3	4560	14
S20	2	#16	3	4480	14
S21	2	#16	3	4360	14
S22	2	#16	3	4280	13
S23	2	#16	3	4200	13
S24	2	#16	3	4080	13
S25	2	#16	3	4000	12
S26	2	#16	3	3920	12
S27	2	#16	3	3800	12
S28	2	#16	3	3720	12
S29	2	#16	3	3600	11
S30	2	#16	3	3520	11

BAR	NO.	SIZE	TYPE	LENGTH	WEIGHT
S31	2	#16	3	3440	11
S32	2	#16	3	3320	10
V1	36	#32	1	6580	1517
U1	35	#13	5	2000	70
U2	8	#13	5	1960	16
U3	4	#13	5	2240	9
U4	4	#13	5	1920	8
T1	252	#19	STR	3600	2028
REINFORCING STEEL				KG.	9204
SP-1	3	✻✻	6	236680	706
SPIRAL COLUMN REINFORCING STEEL				KG.	706

CLASS "A" CONCRETE		
POUR #1 (FOOTING)	M³	35.3
POUR #2 (COLUMN)	M³	14.9
POUR #3 (CAP)	M³	40.0
TOTAL CONCRETE	M³	90.2

FOUNDATION EXCAVATION LUMP SUM

✻✻ THE SP-1 SPIRAL REINFORCING STEEL SHALL BE W-20 OR D-20 COLD DRAWN WIRE OR #13 PLAIN OR DEFORMED BAR.

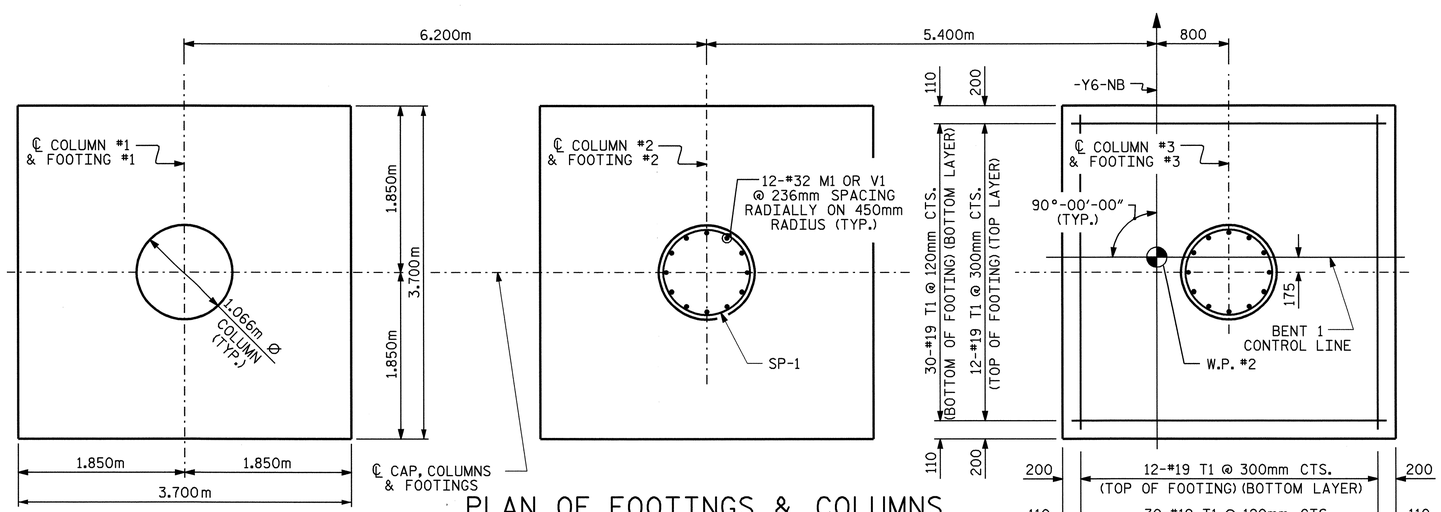

PLAN OF FOOTINGS & COLUMNS

DIMENSIONS AND REINFORCING ARE TYPICAL EACH COLUMN AND FOOTING

NORTH CAROLINA PROFESSIONAL SEAL 23926 ENGINEER BRIAN C. HAWKS
5/22/06

PROJECT NO. R-0609IA
GUILFORD COUNTY
STATION: 52+65.808 -L-

SHEET 2 OF 2

STATE OF NORTH CAROLINA
DEPARTMENT OF TRANSPORTATION
RALEIGH

SUBSTRUCTURE
BENT 1

REVISIONS								SHEET NO.
NO.	BY:	DATE:	NO.	BY:	DATE:			S-190
1			3					TOTAL SHEETS
2			4					321

DRAWN BY : J.L. WALTON DATE : 1/4/05
CHECKED BY : R. W. WRIGHT DATE : 3/05

15-MAY-2006 14:17
G:\STRUCT~1\frye\FINAL_~1\Str6\R0609I~3.DGN
dely

STR #6

NOTES:

FOR PILE SPLICE DETAILS, SEE SHEET 2 OF 2.

FOR TEMPORARY DRAINAGE DETAILS, SEE SHEET 2 OF 2.

THE CONTRACTOR SHALL PROVIDE FOR INSTALLATION OF THE 102mm DIAMETER DRAIN PIPE THROUGH THE WING WALL AS REQUIRED FOR REINFORCED BRIDGE APPROACH FILLS, SEE THE ROADWAY PLANS. REINFORCING STEEL IN THE WING WALL MAY BE SHIFTED AS NECESSARY TO CLEAR THE DRAIN PIPE.

THE TOP SURFACE OF THE END BENT CAP AND WINGS, EXCLUDING THE OUTSIDE 4" AND THE BEARING AREA, SHALL BE RAKED TO A DEPTH OF 1/4".

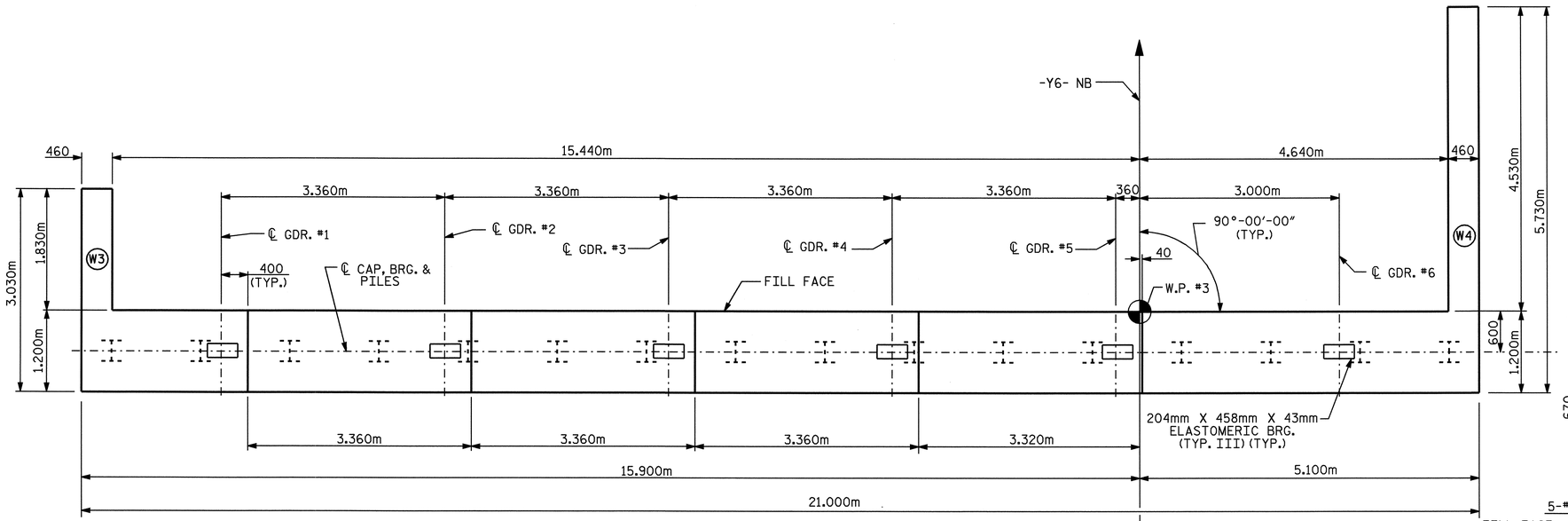

PLAN

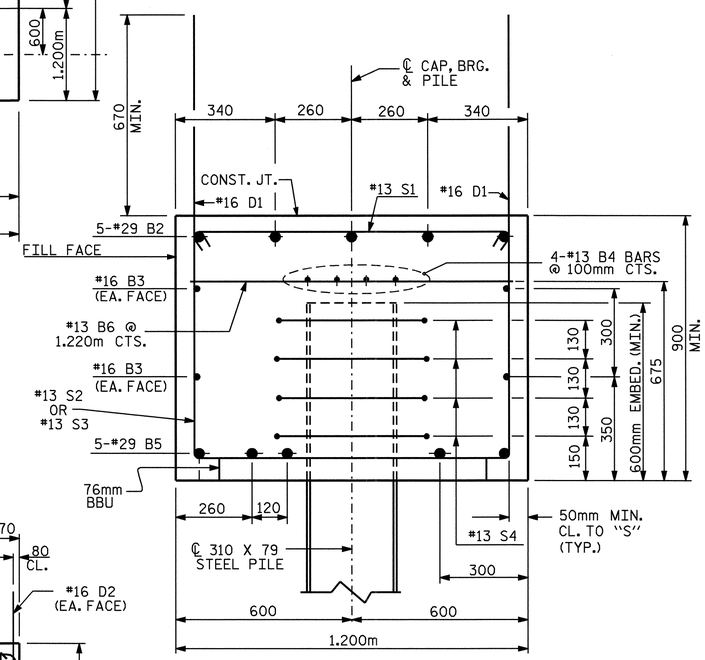

SECTION A-A

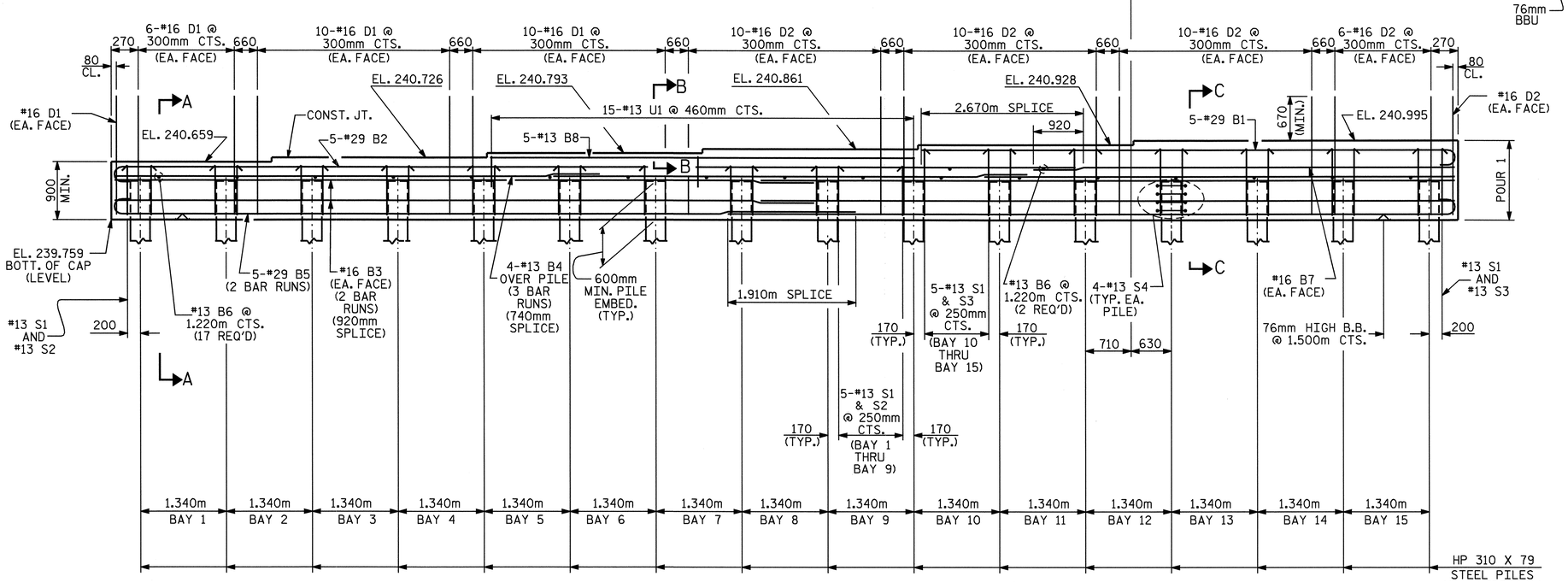

ELEVATION

PROJECT NO. R-0609IA

GUILFORD COUNTY

STATION: 52+65.808 -L-

SHEET 1 OF 2

STATE OF NORTH CAROLINA
DEPARTMENT OF TRANSPORTATION
RALEIGH

SUBSTRUCTURE

END BENT 2

REVISIONS						SHEET NO.
NO.	BY:	DATE:	NO.	BY:	DATE:	S-191
1			3			TOTAL SHEETS
2			4			321

STR. #6

NORTH CAROLINA PROFESSIONAL SEAL 23926 ENGINEER BRIAN C. HAWKS 5/22/06

DRAWN BY : QT NGUYEN DATE : 2-05
CHECKED BY : RW WRIGHT DATE : 3-05

15-MAY-2006 14:17
G:\STRUCT~1\frye\FINAL_~1\Str6\R0B030~1.DGN
dely

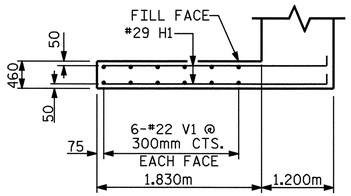

PLAN OF WING W3

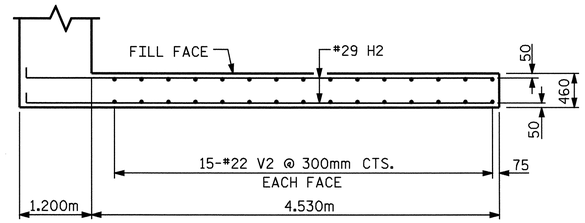

PLAN OF WING W4

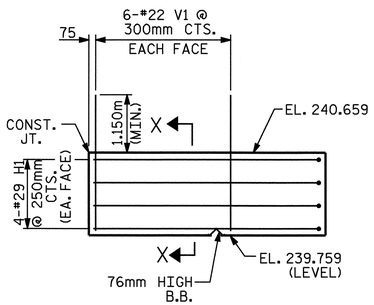

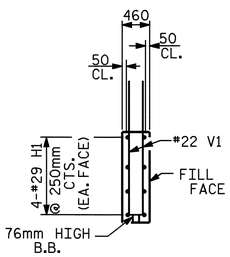

SECTION X-X

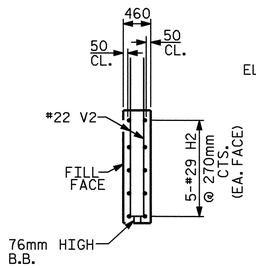

SECTION Y-Y

ELEVATION OF WING W3

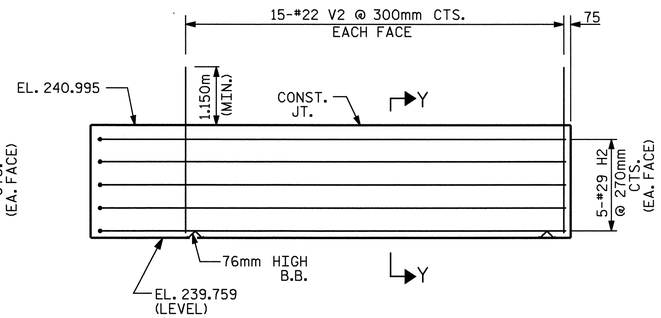

ELEVATION OF WING W4

BAR TYPES

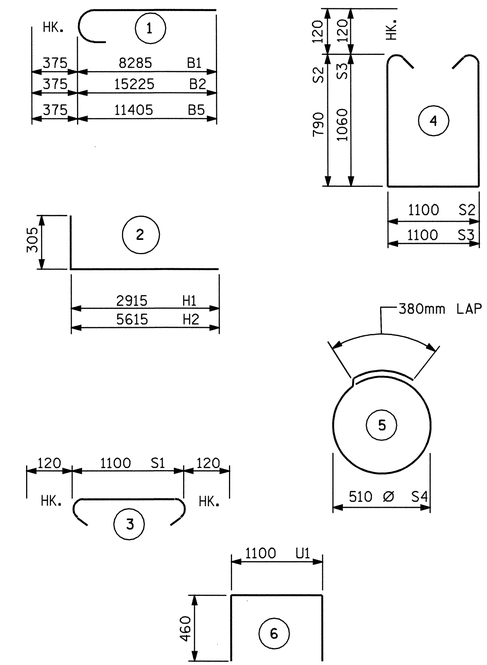

ALL BAR DIMENSIONS ARE OUT TO OUT.

BILL OF MATERIAL
END BENT 2

BAR	NO.	SIZE	TYPE	LENGTH	WEIGHT
B1	5	#29	1	8660	219
B2	5	#29	1	15600	395
B3	8	#16	STR	10900	135
B4	12	#13	STR	7460	89
B5	10	#29	1	11780	596
B6	19	#13	STR	1100	21
B7	2	#16	STR	6540	20
B8	5	#13	STR	6720	33
D1	54	#16	STR	1640	137
D2	74	#16	STR	1840	211
H1	8	#29	2	3220	130
H2	10	#29	2	5920	300
S1	77	#13	3	1340	103
S2	46	#13	4	2920	134
S3	31	#13	4	3460	107
S4	64	#13	5	1980	126
U1	15	#13	6	2020	30
V1	12	#22	STR	1980	72
V2	30	#22	STR	2320	212

REINFORCING STEEL = 3070 KG

CLASS A CONCRETE BREAKDOWN
POUR #1: CAP & LOWER WINGS 30.7 M3

TOTAL CONCRETE 30.7 M3

PILE EXCAVATION IN SOIL 48.6 METERS

PILE EXCAVATION NOT IN SOIL 28.8 METERS

HP 310 X 79 STEEL PILES
NO. 16 77.4 METERS

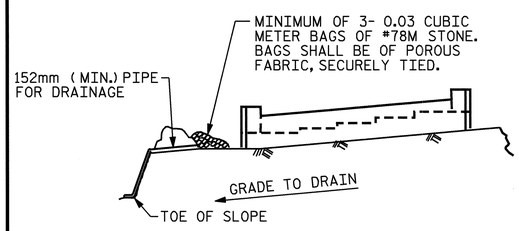

BAGGED STONE AND PIPE SHALL BE PLACED IMMEDIATELY AFTER COMPLETION OF END BENT EXCAVATION. PIPE MAY BE EITHER CONCRETE, CORRUGATED STEEL, CORRUGATED ALUMINUM ALLOY, OR CORRUGATED PLASTIC. PERFORATED PIPE WILL NOT BE ALLOWED.

BAGGED STONE SHALL REMAIN IN PLACE UNTIL THE ENGINEER DIRECTS THAT IT BE REMOVED. THE CONTRACTOR SHALL REMOVE AND DISPOSE OF SILT ACCUMULATIONS AT BAGGED STONE WHEN SO DIRECTED BY THE ENGINEER. BAGS SHALL BE REMOVED AND REPLACED WHENEVER THE ENGINEER DETERMINES THAT THEY HAVE DETERIORATED AND LOST THEIR EFFECTIVENESS.

NO SEPARATE PAYMENT WILL BE MADE FOR THIS WORK AND THE ENTIRE COST OF THIS WORK SHALL BE INCLUDED IN THE UNIT CONTRACT PRICE BID FOR THE SEVERAL PAY ITEMS.

TEMPORARY DRAINAGE AT END BENT

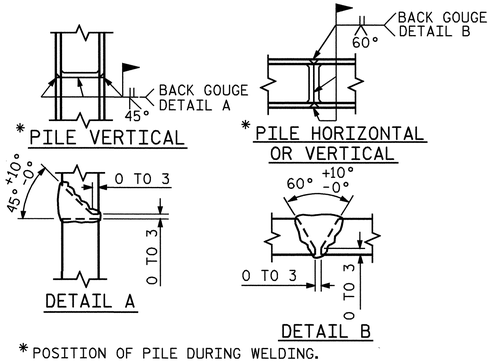

* POSITION OF PILE DURING WELDING.

PILE SPLICE DETAILS

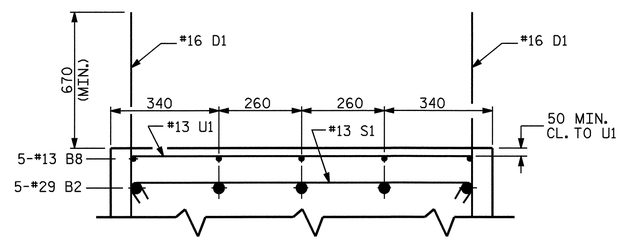

PARTIAL SECTION B-B

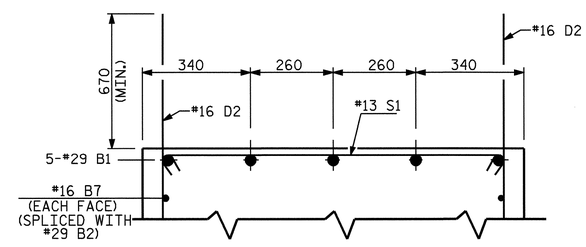

PARTIAL SECTION C-C

PROJECT NO. R-0609IA
GUILFORD COUNTY
STATION: 52+65.808 -L-

SHEET 2 OF 2

STATE OF NORTH CAROLINA
DEPARTMENT OF TRANSPORTATION
RALEIGH

SUBSTRUCTURE
END BENT 2

NORTH CAROLINA PROFESSIONAL SEAL 23926 ENGINEER BRIAN C. HAWKS
5/22/06

REVISIONS								SHEET NO.
NO.	BY:	DATE:	NO.	BY:	DATE:			S-192
1			3					TOTAL SHEETS
2			4					321

DRAWN BY : QT NGUYEN DATE : 02-05
CHECKED BY : RW WRIGHT DATE : 03-05

15-MAY-2006 15:19
G:\STRUCT~1\frye\FINAL_~1\Str6\R0B030~1.DGN
dely

STR. #6

NOTES

SLOPE PROTECTION SHALL BE PLACED UNDER THE ENDS OF THE BRIDGE AS SHOWN IN THE DETAILS. METHOD OF MEASUREMENT AND BASIS OF PAYMENT SHALL BE AS PRESCRIBED IN SECTION 462 OF THE STANDARD SPECIFICATIONS. FOR BERM WIDTH, SEE GENERAL DRAWING.

SLOPE PROTECTION SHALL CONSIST OF 100mm POURED-IN-PLACE CONCRETE PAVING AS SHOWN IN THE DETAILS ON THIS SHEET. CONCRETE SHALL BE CLASS "B". THE CONCRETE SURFACE SHALL BE FLOATED WITH A WOODEN FLOAT AND FINISHED. WELDED WIRE FABRIC REINFORCING SHALL BE 152 X 152 - W9.1 X W9.1, 1520mm WIDE. SLOPE PROTECTION SHALL BE POURED IN 1520mm STRIPS AS SHOWN IN THE "POURING DETAIL" WITH 600mm LONG #13 BARS PLACED ALONG THE SLOPE BETWEEN STRIPS AT 450mm MAXIMUM SPACING. SLOPE PROTECTION MAY BE POURED IN ALTERNATE 1220mm AND 1520mm STRIPS AS SHOWN IN THE "OPTIONAL POURING DETAIL" WITH ADJACENT RUNS OF WELDED WIRE FABRIC LAPPING AT LEAST 152mm. THE COST OF THE WELDED WIRE FABRIC AND #13 BARS, IF USED, SHALL BE INCLUDED IN THE CONTRACT UNIT PRICE BID PER SQUARE METER FOR SLOPE PROTECTION.

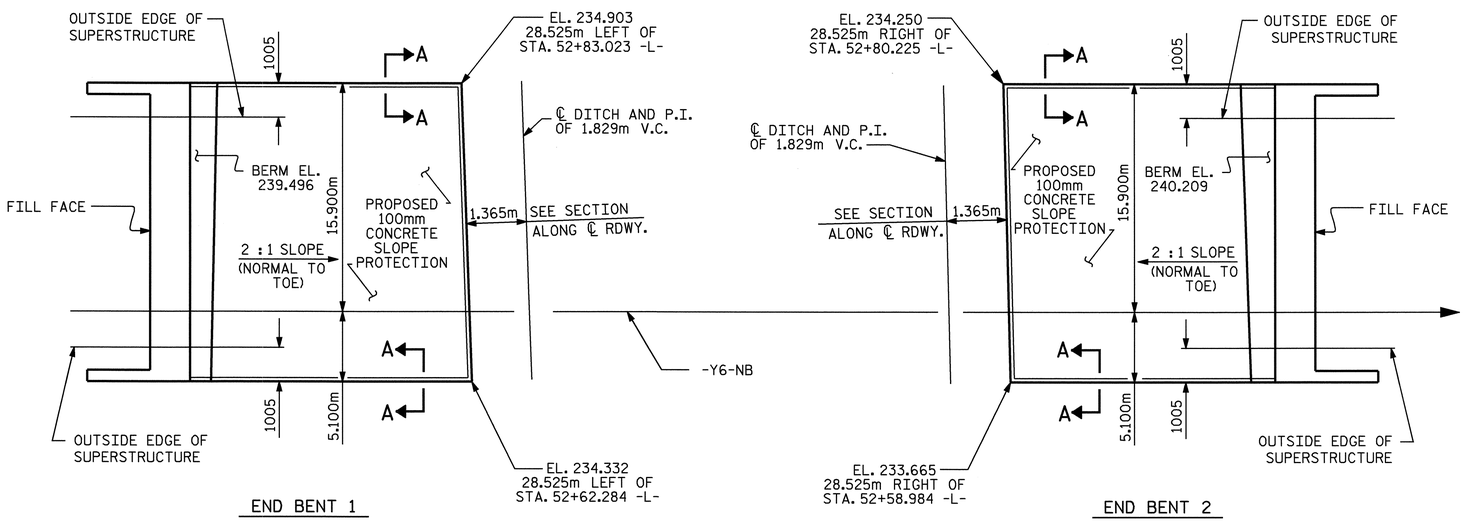

PLAN OF SLOPE PROTECTION

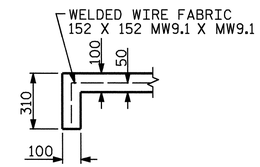

SECTION A-A

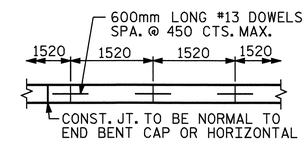

STRIP WIDTHS MAY VARY IN CURVED PORTION.

POURING DETAIL

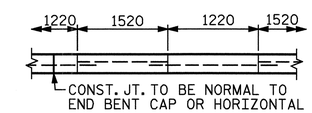

POUR A 1220mm STRIP FIRST. STRIP WIDTHS MAY VARY IN CURVED PORTION.

OPTIONAL POURING DETAIL

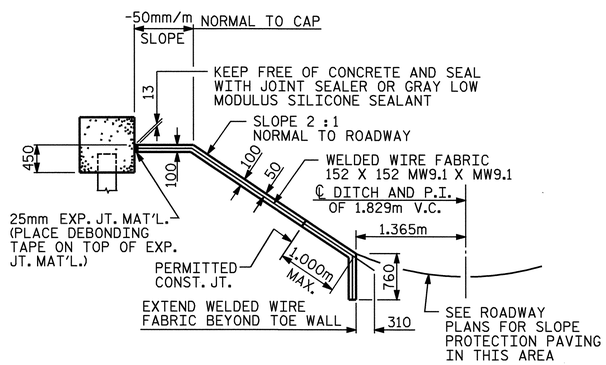

SECTION ALONG ℄ ROADWAY WHEN FILL CATCHES IN DITCH

BRIDGE @ STA. 52+65.808 -L-	100mm SLOPE PROTECTION	* WELDED WIRE FABRIC 1520mm WIDE
	SQUARE METERS	APPROX. METERS
END BENT 1	260	220
END BENT 2	340	280

* QUANTITY SHOWN IS BASED ON 1520mm POURS.

PROJECT NO. R-0609IA
GUILFORD COUNTY
STATION: 52+65.808 -L-

STATE OF NORTH CAROLINA
DEPARTMENT OF TRANSPORTATION
RALEIGH

STANDARD
SLOPE PROTECTION
DETAILS

NORTH CAROLINA PROFESSIONAL SEAL 23926 ENGINEER BRIAN C. HAWKS
5/22/06

REVISIONS							SHEET NO.
NO.	BY:	DATE:	NO.	BY:	DATE:		S-193
1			3				TOTAL SHEETS
2			4				321

ASSEMBLED BY : J.L. WALTON		DATE : 10/7/04	
CHECKED BY : D.G. ELY		DATE : 11/15/04	
DRAWN BY : ELR 5/92	REV. 10/17/00	RWW/LES	
CHECKED BY : GRP 6/92	REV. 7/10/01	LES/RDR	
	REV. 5/7/03	RWW/JTE	

15-MAY-2006 14:16
G:\STRUCT~1\frye\FINAL_~1\Str6\R012E9~1.DGN
dely

STR #6

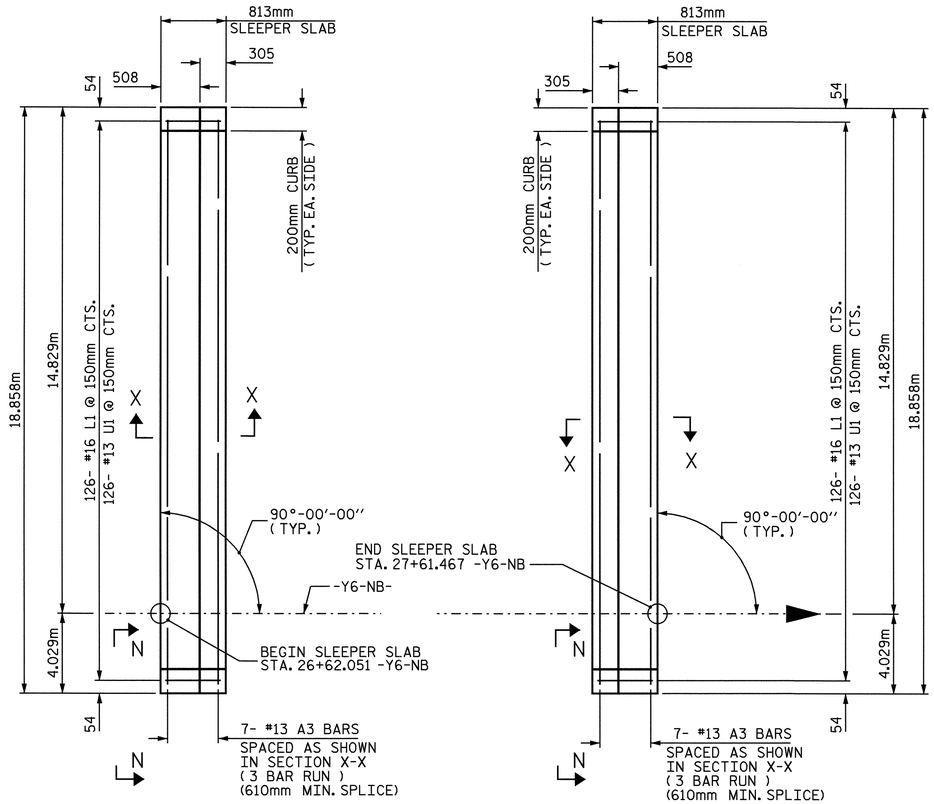

PLAN OF SLEEPER SLAB

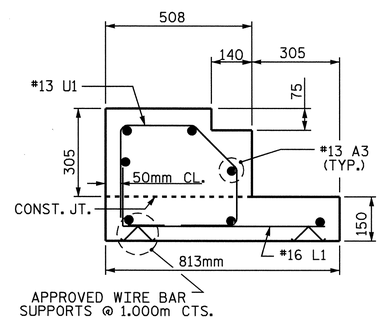

SECTION X-X

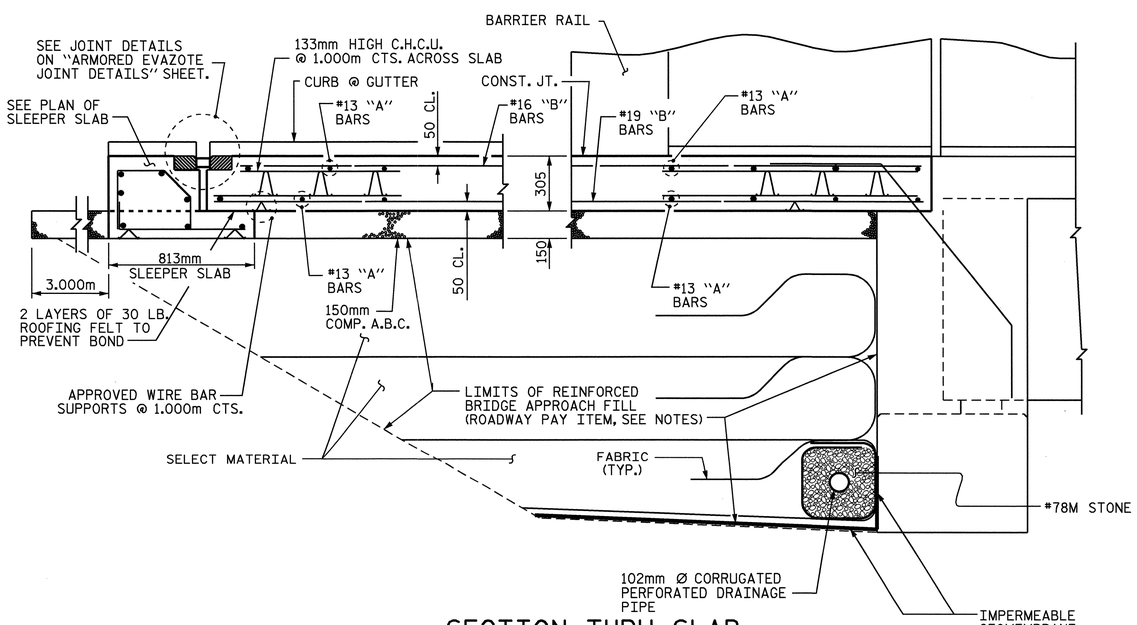

SECTION THRU SLAB

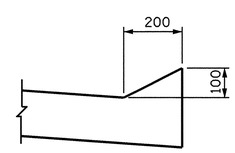

VIEW N-N

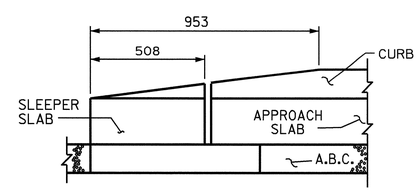

END OF CURB WITHOUT
SHOULDER BERM GUTTER

CURB DETAILS

NOTES

APPROACH SLAB SHALL NOT BE CONSTRUCTED PRIOR TO COMPLETION OF THE BRIDGE DECK.

FOR REINFORCED BRIDGE APPROACH FILL INCLUDING FABRIC, IMPERMEABLE GEOMEMBRANE, 102mm Ø DRAINAGE PIPE, #78M STONE, AND SELECT MATERIAL, SEE ROADWAY PLANS.

TEMPORARY DRAINAGE AND TEMPORARY BERM AND SLOPE DRAINS WILL BE PAID FOR UNDER THE LUMP SUM PRICE FOR BRIDGE APPROACH SLAB.

AREA BETWEEN THE WINGWALL AND APPROACH SLAB SHALL BE GRADED TO DRAIN THE WATER AWAY FROM THE FILL FACE OF THE BRIDGE.

THE 150mm COMP. A.B.C. SHALL EXTEND 3.000m BEYOND THE END OF THE SLEEPER SLAB AND 300mm OUTSIDE OF EACH EDGE OF THE SLEEPER SLAB. THIS MATERIAL ALSO SHALL BE PLACED BETWEEN THE SLEEPER SLAB AND THE ABUTMENT AND 300mm OUTSIDE OF EACH EDGE OF THE APPROACH SLAB.

THE CONTRACTOR MAY USE 100mm TYPE B-25.0B ASPHALT CONCRETE BASE COURSE IN LIEU OF 150mm COMP. A.B.C. IF THIS OPTION IS USED, THE BASE COURSE SHALL EXTEND 300mm BEYOND THE END OF THE SLEEPER SLAB AND THE WIDTH SHALL BE THE SAME AS THAT OF THE SLEEPER SLAB. THIS MATERIAL ALSO SHALL BE PLACED BETWEEN THE SLEEPER SLAB AND THE ABUTMENT AND THE WIDTH SHALL BE THE SAME AS THAT OF THE APPROACH SLAB.

THE CONTRACTOR MAY USE 125mm CLASS "A" CONCRETE BASE IN LIEU OF 150mm COMP. A.B.C. IF THIS OPTION IS USED, THE CONCRETE BASE SHALL EXTEND 300mm BEYOND THE END OF THE SLEEPER SLAB AND THE WIDTH SHALL BE THE SAME AS THAT OF THE SLEEPER SLAB. THIS MATERIAL ALSO SHALL BE PLACED BETWEEN THE SLEEPER SLAB AND THE ABUTMENT AND THE WIDTH SHALL BE THE SAME AS THAT OF THE APPROACH SLAB. THE CONCRETE SHALL BE FINISHED TO A SMOOTH SURFACE AND A LAYER OF 13.6 Kg. ROOFING FELT SHALL BE PLACED BETWEEN THE CONCRETE BASE AND THE APPROACH SLAB TO PREVENT BOND. THE APPROACH SLAB SHALL NOT BE CAST UNTIL THE CONCRETE BASE HAS REACHED AN AGE OF THREE CURING DAYS.

BILL OF MATERIAL

FOR ONE APPROACH SLAB (2 REQ'D)

BAR	NO.	SIZE	TYPE	LENGTH	WEIGHT
✳ A1	78	#13	STR	6660	516
A2	78	#13	STR	6600	512
✳ A3	21	#13	STR	6660	139
✳ B1	126	#16	STR	7380	1415
B2	126	#19	STR	7520	2118
✳ B3	14	#16	STR	3560	77
✳ B4	2	#16	3	1940	6
L1	126	#16	1	900	176
✳ S1	50	#16	STR	980	76
✳ S2	50	#16	1	1220	95
✳ S3	20	#16	2	680	21
✳ U1	126	#13	4	1320	165

REINFORCING STEEL = 2806 KG
✳ EPOXY COATED REINF. STEEL = 2538 KG

CLASS AA CONCRETE BREAKDOWN

POUR 1	SLEEPER SLAB AND CURB	5.3 C.M.
POUR 2	SLAB AND CURB	44.1 C.M.
POUR 3	RAIL	1.6 C.M.
CLASS AA CONCRETE		51.0 C.M.

BAR TYPES

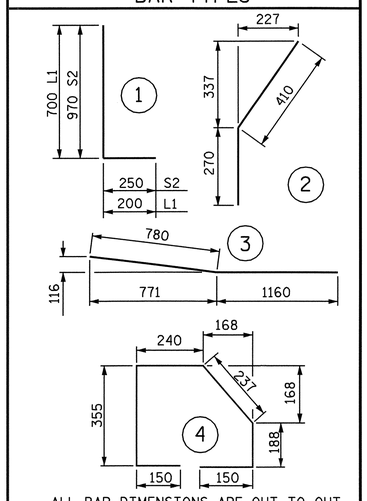

ALL BAR DIMENSIONS ARE OUT TO OUT

PROJECT NO. R-0609IA
GUILFORD COUNTY
STATION: 52+65.808 -L-

SHEET 1 OF 4

STATE OF NORTH CAROLINA
DEPARTMENT OF TRANSPORTATION
RALEIGH

BRIDGE APPROACH SLAB FOR RIGID PAVEMENT WITH BARRIER RAIL

NORTH CAROLINA PROFESSIONAL SEAL 23926 ENGINEER BRIAN C. HAWKS
11/9/06

REVISIONS						SHEET NO.
NO.	BY:	DATE:	NO.	BY:	DATE:	S-194
1			3			TOTAL SHEETS
2			4			321

DRAWN BY : M. D. PISO DATE : 08/2004
CHECKED BY : J. L. WALTON DATE : 10/2004

09-NOV-2006 12:25
R:\Structures\frye\FINAL_PLANS\Str6\R0609IA_sd_AS_06.dgn
bhanks

STR. #6

G:\STRUCT01\frye\FINAL_01\Str6\R0609I02.DGN
dely

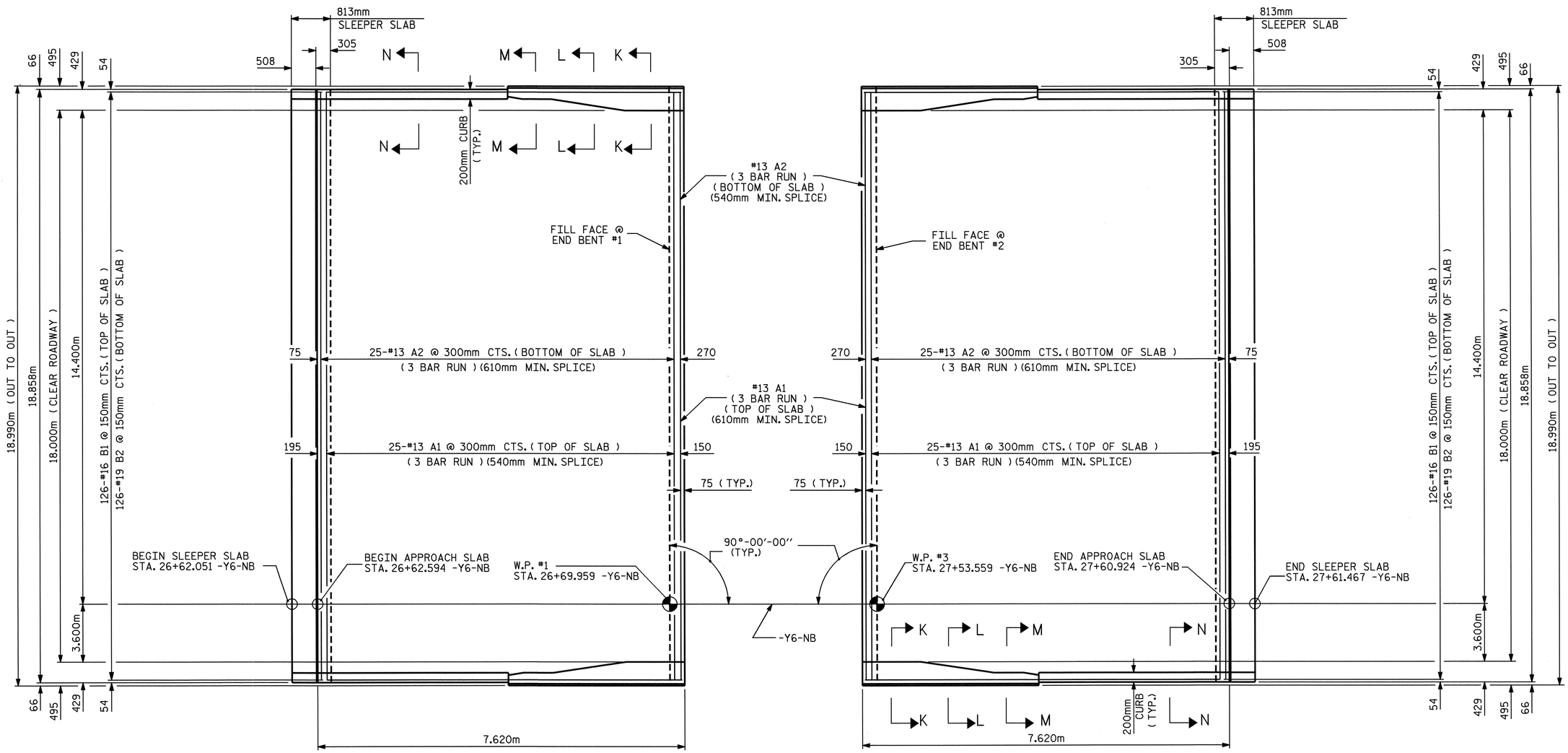

PLAN @ END BENT #1

PLAN @ END BENT #2

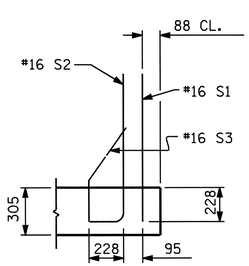

SECTION K-K

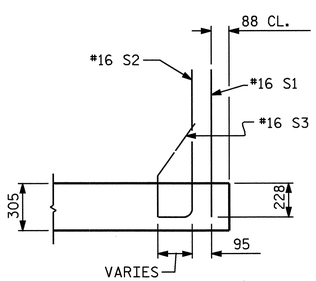

SECTION L-L

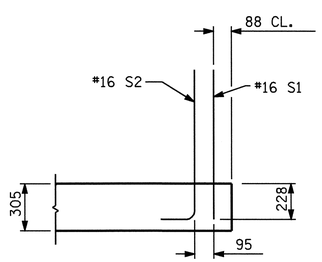

SECTION M-M

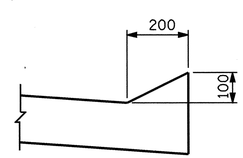

SECTION N-N

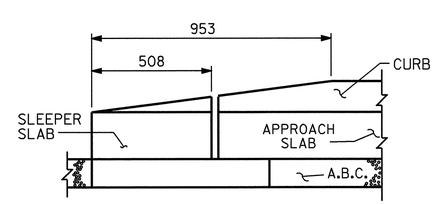

END OF CURB WITHOUT SHOULDER BERM GUTTER

CURB DETAILS

PROJECT NO. R-0609IA
GUILFORD COUNTY
STATION: 52+65.808 -L-

SHEET 2 OF 4

STATE OF NORTH CAROLINA
DEPARTMENT OF TRANSPORTATION
RALEIGH

BRIDGE APPROACH SLAB FOR RIGID PAVEMENT WITH BARRIER RAIL

NORTH CAROLINA PROFESSIONAL SEAL 23926 ENGINEER BRIAN C. HAWKS
5/22/06

REVISIONS						SHEET NO.
NO.	BY:	DATE:	NO.	BY:	DATE:	S-195
1			3			TOTAL SHEETS
2			4			321

DRAWN BY : M. D. PISO DATE : 08/2004
CHECKED BY : J. L. WALTON DATE : 10/2004

STR. #6

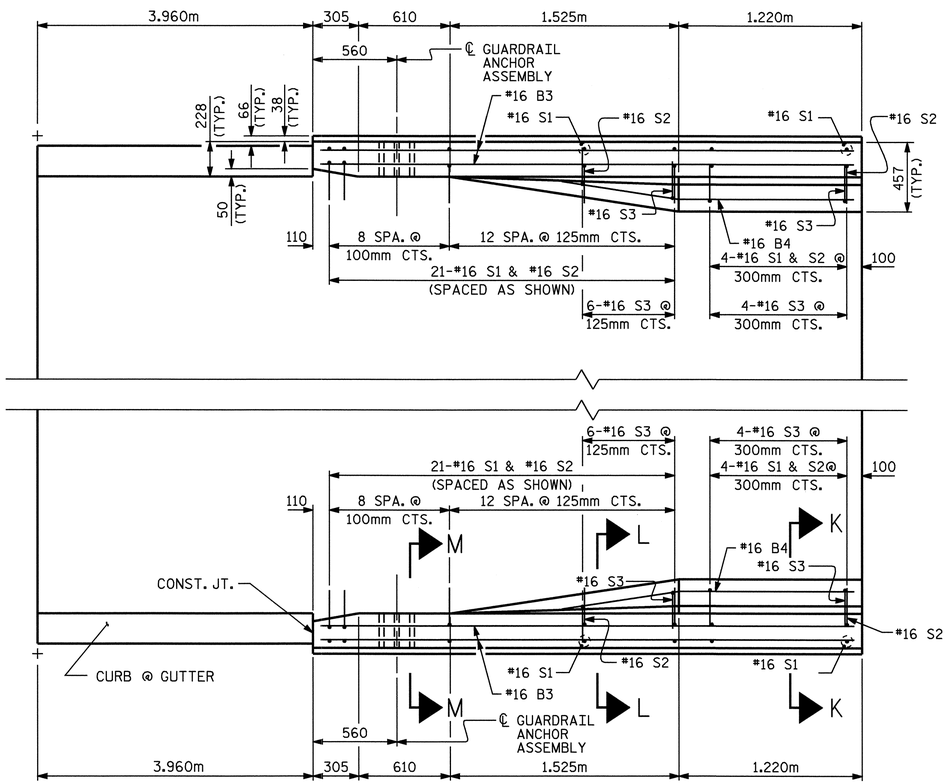

PLAN

BEGIN APPROACH SLAB SHOWN, END APPROACH SLAB SIMILAR

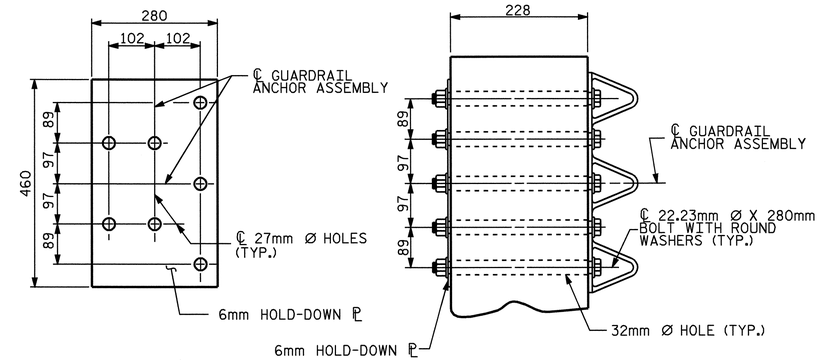

PLAN

SECTION E-E

NOTES

THE GUARDRAIL ANCHOR ASSEMBLY SHALL CONSIST OF A 6mm HOLD DOWN PLATE AND 7 - 22.23mm Ø BOLTS WITH NUTS AND WASHERS.

THE HOLD-DOWN PLATE SHALL CONFORM TO AASHTO M270 GRADE 250. AFTER FABRICATION, THE HOLD-DOWN PLATE SHALL BE GALVANIZED IN ACCORDANCE WITH AASHTO M111.

BOLTS SHALL CONFORM TO THE REQUIREMENTS OF ASTM A307 AND NUTS SHALL CONFORM TO THE REQUIREMENTS OF AASHTO M291M. BOLTS, NUTS AND WASHERS SHALL BE GALVANIZED. AT THE CONTRACTOR'S OPTION, STAINLESS STEEL BOLTS, NUTS AND WASHERS MAY BE USED AS AN ALTERNATE FOR THE 22.23mm Ø GALVANIZED BOLTS, NUTS AND WASHERS. THEY SHALL CONFORM TO OR EXCEED THE MECHANICAL REQUIREMENTS OF ASTM A307. THE USE OF THIS ALTERNATE SHALL BE APPROVED BY THE ENGINEER.

AFTER INSTALLATION, THE EXPOSED THREAD OF THE BOLT SHALL BE BURRED WITH A SHARP POINTED TOOL.

THE COST OF THE GUARDRAIL ANCHOR ASSEMBLIES WITH BOLTS, NUTS AND WASHERS COMPLETE IN PLACE, SHALL BE INCLUDED IN THE LUMP SUM CONTRACT PRICE BID FOR BRIDGE APPROACH SLABS.

THE 32mm Ø HOLES SHALL BE FORMED OR DRILLED WITH A CORE BIT. IMPACT TOOLS WILL NOT BE PERMITTED. ANY CONCRETE DAMAGED BY THIS WORK SHALL BE REPAIRED TO THE SATISFACTION OF THE ENGINEER.

GUARDRAIL ANCHOR ASSEMBLY DETAILS

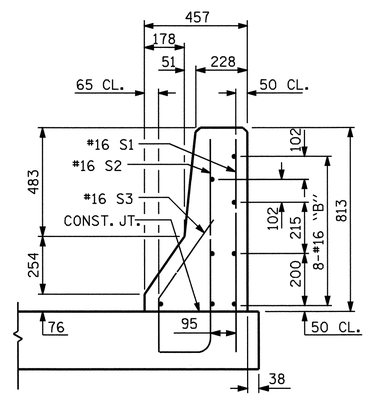

SECTION K-K

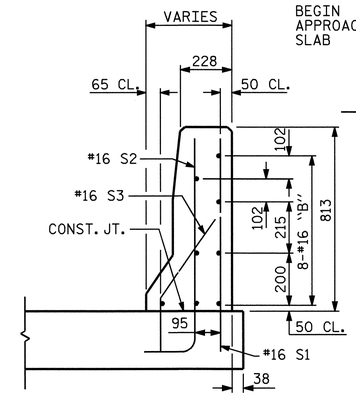

SECTION L-L

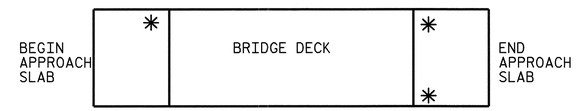

SKETCH SHOWING POINTS OF ATTACHMENT

✱ INDICATES POINTS OF ATTACHMENT

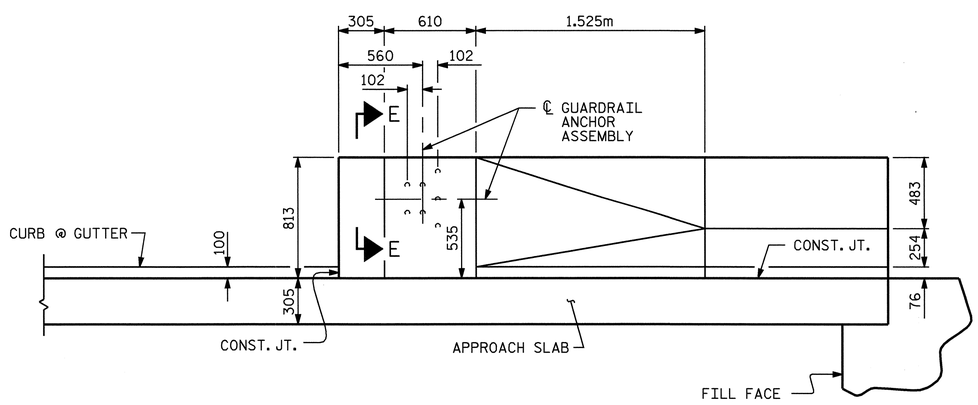

ELEVATION

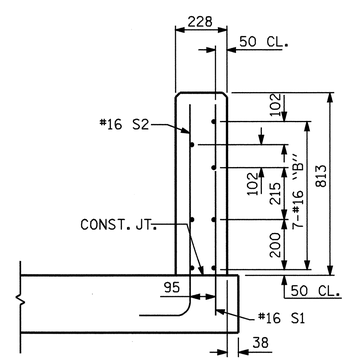

SECTION M-M

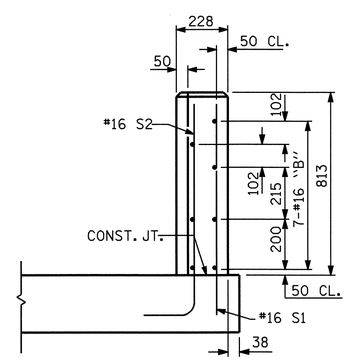

END VIEW

PROJECT NO. R-0609IA

GUILFORD COUNTY

STATION: 52+65.808 -L-

SHEET 3 OF 4

STATE OF NORTH CAROLINA
DEPARTMENT OF TRANSPORTATION
RALEIGH

BRIDGE APPROACH SLAB FOR RIGID PAVEMENT WITH BARRIER RAIL

NORTH CAROLINA PROFESSIONAL SEAL 23926 ENGINEER BRIAN C. HANKS
5/22/06

REVISIONS						SHEET NO.
NO.	BY:	DATE:	NO.	BY:	DATE:	S-196
1			3			TOTAL SHEETS
2			4			321

DRAWN BY : M. D. PISO DATE : 08/2004
CHECKED BY : J. L. WALTON DATE : 10/2004

15-MAY-2006 14:15
G:\STRUCT~1\frye\FINAL_~1\Str6\R0609I~2.DGN
dely

STR. #6

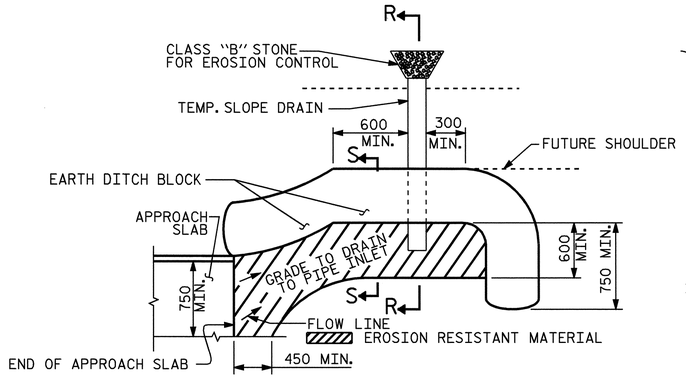

NOTE: IMMEDIATELY AFTER THE CONSTRUCTION OF THE APPROACH SLAB, THE CONTRACTOR SHALL PROVIDE TEMPORARY BERM AND SLOPE DRAIN. CONTRACTOR SHALL GRADE TO PIPE INLET AND PROVIDE EROSION RESISTANT MATERIAL AS SHOWN. THE EROSION RESISTANT MATERIAL SHALL BE EITHER 1) ASPHALT PLANT MIX, TYPE 1 OR TYPE 2, MIN. 50mm DEPTH, 2) EROSION CONTROL MAT, OR 3) CONCRETE, AS DIRECTED BY THE ENGINEER. THE SLOPE DRAIN SHALL CONSIST OF A NON-PERFORATED TEMPORARY DRAINAGE PIPE, 305mm IN DIAMETER.

PLAN VIEW

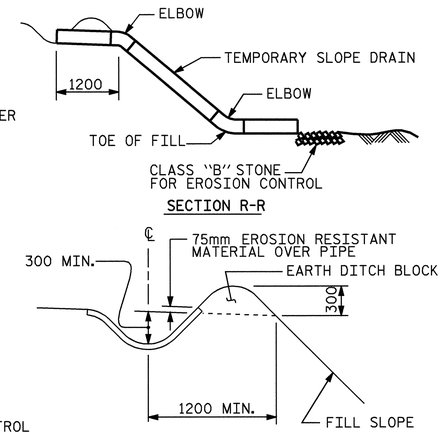

SECTION S-S

TEMPORARY BERM AND SLOPE DRAIN DETAILS

(TO BE USED WHEN SHOULDER BERM GUTTER IS REQUIRED)

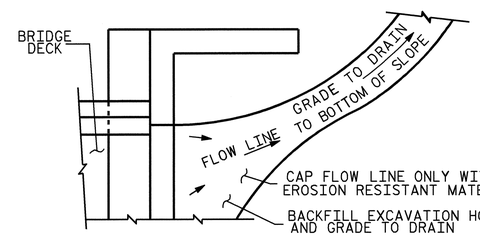

NOTE: IF THE APPROACH SLAB IS NOT CONSTRUCTED IMMEDIATELY AFTER THE BACKFILLING OF THE END BENT EXCAVATION, GRADE TO DRAIN TO THE BOTTOM OF THE SLOPE AND PROVIDE EROSION RESISTANT MATERIAL, SUCH AS FIBERGLASS ROVING OR AS DIRECTED BY THE ENGINEER TO PREVENT SOIL EROSION AND TO PROTECT THE AREA ADJACENT TO THE STRUCTURE. THE CONTRACTOR WILL BE REQUIRED TO REMOVE THESE MATERIALS PRIOR TO CONSTRUCTION OF THE APPROACH SLAB.

TEMPORARY DRAINAGE DETAIL

PROJECT NO. R-0609IA
GUILFORD COUNTY
STATION: 52+65.808 -L-

SHEET 4 OF 4

STATE OF NORTH CAROLINA
DEPARTMENT OF TRANSPORTATION
RALEIGH

BRIDGE APPROACH SLAB DETAILS

NORTH CAROLINA PROFESSIONAL SEAL 23926 ENGINEER BRIAN C. HAWKS
5/22/06

REVISIONS						SHEET NO.
NO.	BY:	DATE:	NO.	BY:	DATE:	S-197
1			3			TOTAL SHEETS
2			4			321

DRAWN BY : M. D. PISO DATE : 08/2004
CHECKED BY : J. L. WALTON DATE : 10/2004

15-MAY-2006 14:15
G:\STRUCT~1\frye\FINAL_~1\Str6\R0609I~2.DGN
daly

STR. #6

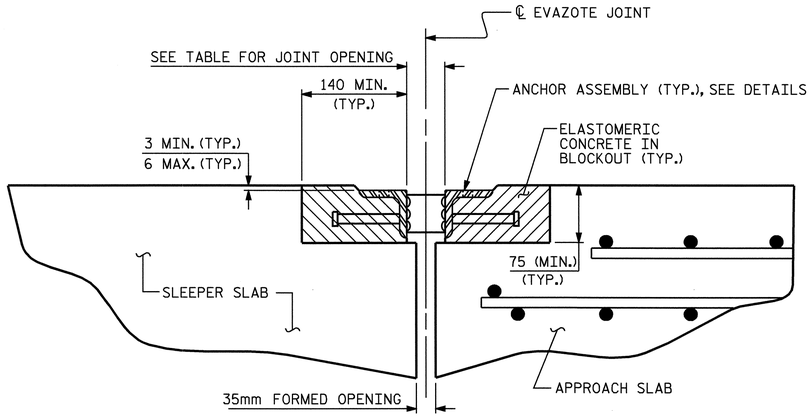

ARMORED JOINT DETAILS

SECTION NORMAL TO JOINT AT APPROACH SLAB

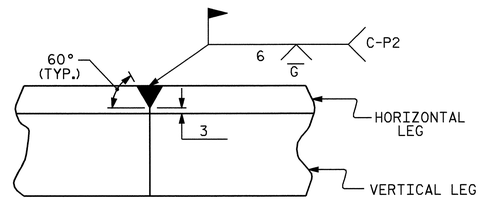

DETAIL- FIELD WELD SPLICE OF ANGLE

NOTES

ANGLES SHALL CONFORM TO AASHTO M270 GRADE 250 STEEL OR APPROVED EQUAL. ALL STUD ANCHORS SHALL CONFORM TO AASHTO M169 GRADES 1010 THRU 1020 OR APPROVED EQUAL.

STUD ANCHORS SHALL BE SHOP WELDED AND ALL HOLES SHALL BE SHOP DRILLED AS SHOWN ON THE PLANS. STUD ANCHORS SHALL BE ELECTRIC ARC END WELDED WITH COMPLETE FUSION.

UPON COMPLETION OF SHOP FABRICATION, THE ENTIRE ANCHOR ASSEMBLY SHALL BE METALLIZED. THE 12.70mm Ø STUD ANCHORS AND ANCHOR TABS NEED NOT BE METALLIZED. SEE SPECIAL PROVISION FOR THERMAL SPRAYED COATINGS (METALLIZATION).

ANCHOR ASSEMBLY SHALL BE MADE CONTINUOUS THE LENGTH OF THE JOINT FROM GUTTER TO GUTTER. FOR FIELD SPLICES AT ALL CROWN BREAK POINTS, THE ENDS OF THE STEEL ANGLES SHALL BE CUT PARALLEL TO THE BRIDGE CENTERLINE. FINISHED FIELD WELDS SHALL BE GROUND SMOOTH AND COATED WITH A MINIMUM THICKNESS OF 0.100mm OF ZINC-RICH PAINT IN ACCORDANCE WITH THE STANDARD SPECIFICATIONS.

ANCHOR ASSEMBLY SEGMENTS SHALL NOT BE LESS 3.6m NOR MORE THAN 6.1m IN LENGTH. SHORTER SEGMENTS MAY BE USED AT THE EDGE OF ROADWAY OR AT POINTS OF STAGED CONSTRUCTION.

THE ANCHOR ASSEMBLY SHALL BE SECURED AND LEVELED AS SHOWN IN THE "ARMORED JOINT ANCHOR ASSEMBLY DETAILS". NO SUBMITTALS ARE REQUIRED FOR 9.53mm Ø EXPANSION ANCHORS, NUTS OR WASHERS. THE CONTRACTOR MAY SUBMIT FOR APPROVAL AN ALTERNATE METHOD OF ALIGNING AND LEVELING THE ANGLES. THE ALTERNATE METHOD SHALL NOT INCLUDE ANY WELDING TO THE OUTSIDE FACE OF THE ANGLES.

AFTER THE ELASTOMERIC CONCRETE HAS BEEN CAST ON BOTH SIDES OF THE JOINT, REMOVE ANY EXCESS CONCRETE THAT COMES THROUGH THE WEEP HOLES AND THOROUGHLY CLEAN THE ANGLES. ANY DAMAGED STEEL SHALL BE COATED WITH A MINIMUM OF 0.100mm OF ZINC-RICH PAINT IN ACCORDANCE WITH THE STANDARD SPECIFICATIONS.

SEE SPECIAL PROVISIONS FOR EVAZOTE JOINT SEALS.

SEE SPECIAL PROVISIONS FOR ELASTOMERIC CONCRETE.

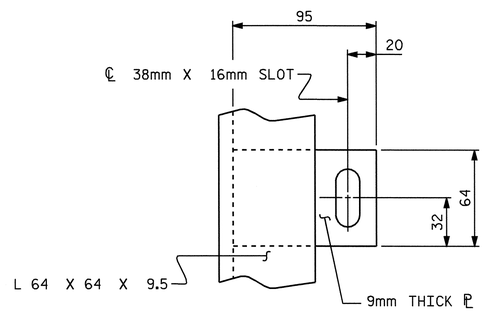

PLAN VIEW OF TAB

MOVEMENT AND SETTING AT EVAZOTE JOINT						
APPROACH SLAB NO.	SKEW ANGLE	NOMINAL UNCOMPRESSED SEAL WIDTH	TOTAL MOVEMENT (ALONG ℄ RDWY)	PERPENDICULAR JOINT OPENING AT 7° C	PERPENDICULAR JOINT OPENING AT 16° C	PERPENDICULAR JOINT OPENING AT 32° C
1	90°-00'-00"	80mm	41mm	67mm	60mm	48mm
2	90°-00'-00"	80mm	41mm	67mm	60mm	48mm

TOTAL MOVEMENT IS CALCULATED ALONG THE CENTERLINE OF ROADWAY.
JOINT OPENINGS ARE MEASURED PERPENDICULAR TO THE JOINT.

BILL OF MATERIAL		
APPROACH SLAB NO.	ELASTOMERIC CONCRETE ✳ (CU. m)	TOTAL LENGTH OF ANGLE (m)
1	0.4	37.000m
2	0.4	37.000m

✳ BASED ON THE MINIMUM BLOCKOUT SHOWN.

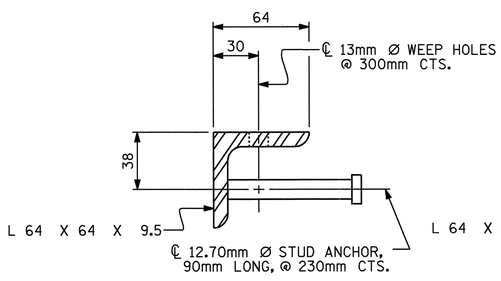

SECTION VIEW OF STUD

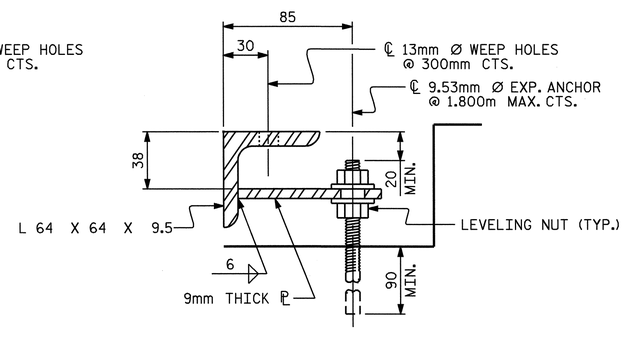

SECTION VIEW OF TAB

ARMORED JOINT ANCHOR ASSEMBLY DETAILS

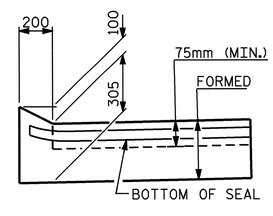

SECTION A-A

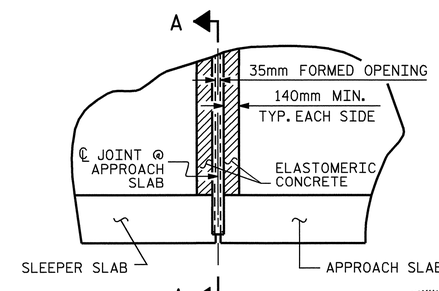

PLAN

PROJECT NO. R-0609IA
GUILFORD COUNTY
STATION: 52+65.808 -L-

STATE OF NORTH CAROLINA
DEPARTMENT OF TRANSPORTATION
RALEIGH

STANDARD ARMORED EVAZOTE JOINT DETAILS

NORTH CAROLINA PROFESSIONAL SEAL 23926 ENGINEER BRIAN C. HANKS
5/22/06

REVISIONS								SHEET NO.
NO.	BY:	DATE:	NO.	BY:	DATE:			S-198
1			3					TOTAL SHEETS
2			4					321

ASSEMBLED BY : R.W. WRIGHT	DATE : 6-05		
CHECKED BY : B.C. HANKS	DATE : 7-01-05		
DRAWN BY : EEM 1/96	REV. 10/17/00	RWW/LES	
CHECKED BY : RGW 1/96	REV. 7/10/01	LES/RDR	
	REV. 5/7/03RR	RWW/JTE	

15-MAY-2006 14:14
G:\STRUCT~1\frye\FINAL_~1\Str6\R0609I~1.DGN
dely

STR. #6

STD. NO. AEJ1SM

F.A. PROJECT: STP-NHF-119-1(15)

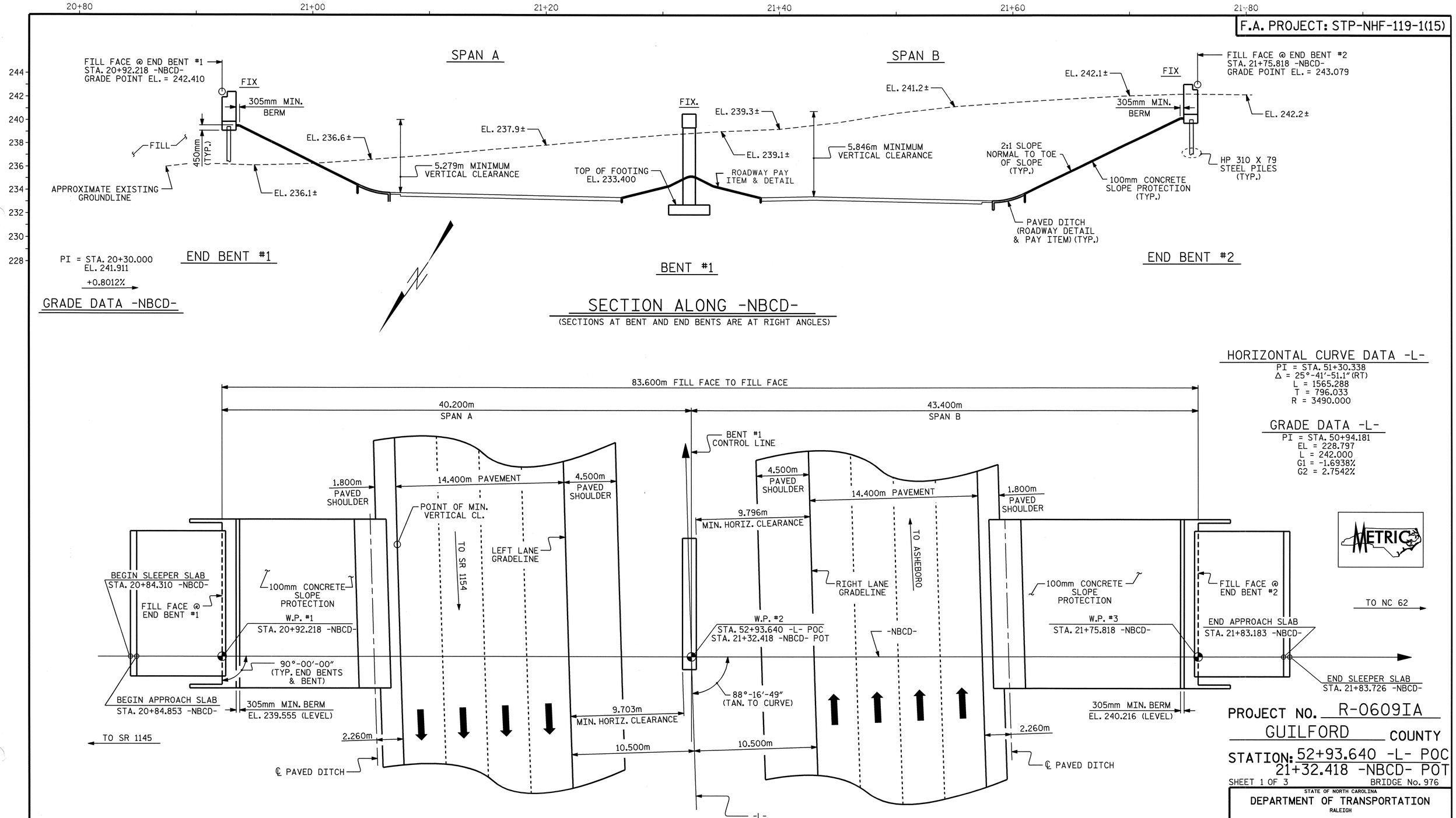

HORIZONTAL CURVE DATA -L-

PI = STA. 51+30.338
Δ = 25°-41'-51.1"(RT)
L = 1565.288
T = 796.033
R = 3490.000

GRADE DATA -L-

PI = STA. 50+94.181
EL = 228.797
L = 242.000
G1 = -1.6938%
G2 = 2.7542%

METRIC

END BENTS AND BENTS SHALL BE CONSTRUCTED AT A SKEW ANGLE OF 90° 00' 00"

NORTH CAROLINA PROFESSIONAL SEAL 11913 ENGINEER JOHN C. FRYE 5-22-06

NORTH CAROLINA PROFESSIONAL SEAL 23926 ENGINEER BRIAN C. HANKS 5/22/06

PROJECT NO. R-0609IA
GUILFORD COUNTY
STATION: 52+93.640 -L- POC
21+32.418 -NBCD- POT

SHEET 1 OF 3 BRIDGE No. 976

STATE OF NORTH CAROLINA
DEPARTMENT OF TRANSPORTATION
RALEIGH

GENERAL DRAWING FOR BRIDGE ON I-85 NORTHBOUND CD OVER US 311 BETWEEN SR 1145 AND NC 62

REVISIONS								SHEET NO.
NO.	BY:	DATE:	NO.	BY:	DATE:			S-199
1			3					TOTAL SHEETS
2			4					321

DRAWN BY : B.N. GRADY/QT NGUYEN DATE : 3-04/5-05
CHECKED BY : R. W. WRIGHT DATE : 5-05

15-MAY-2006 13:47
G:\STRUCT~1\frye\FINAL_~1\Str7\R023D5~1.DGN
dely

STR. #7

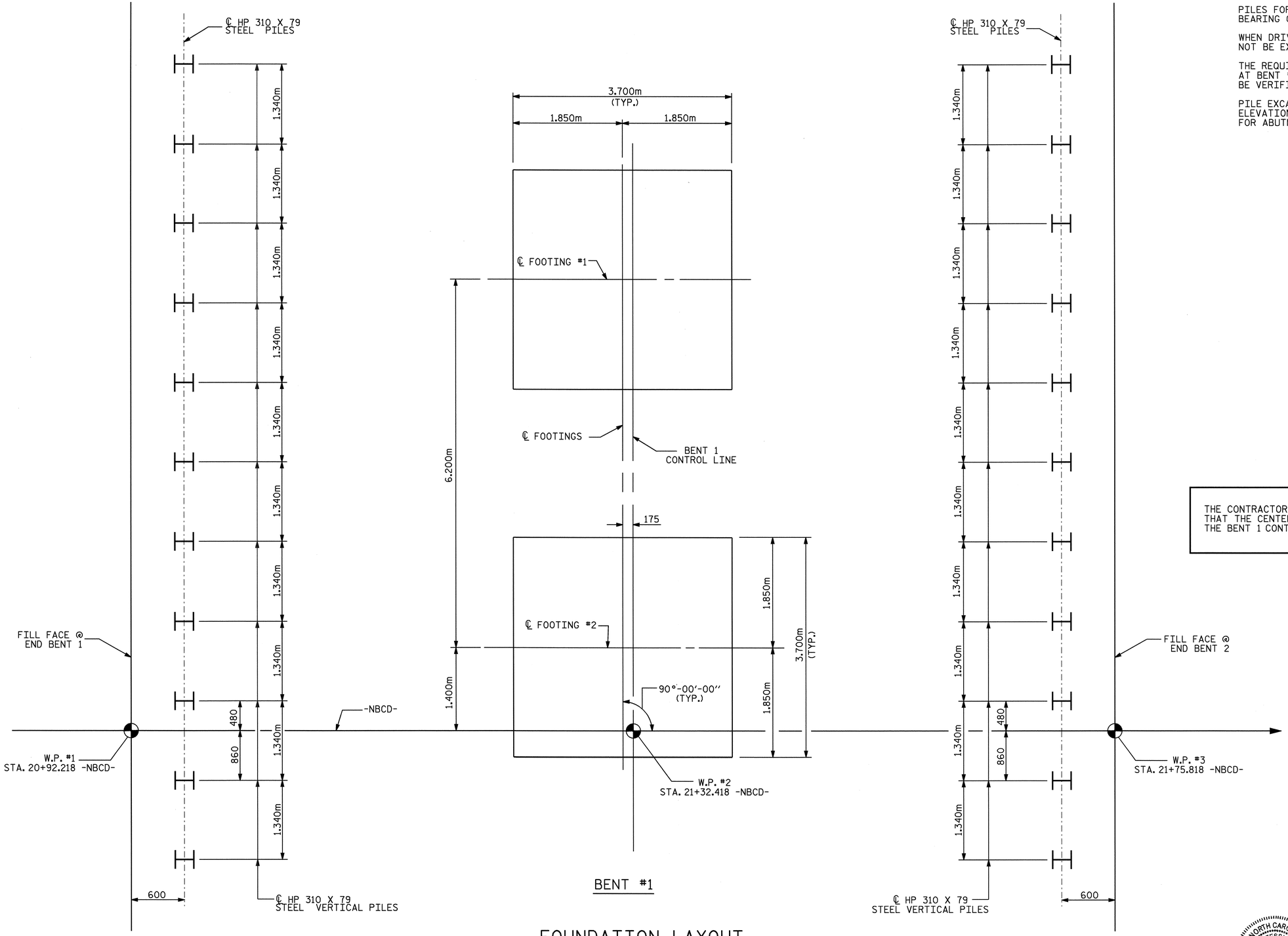

FOUNDATION LAYOUT

ALL PILES ARE HP 310 X 79 STEEL PILES.
DIMENSIONS LOCATING PILES ARE SHOWN TO ℄ PILES.
DIMENSIONS LOCATING FOOTINGS ARE SHOWN TO ℄ FOOTING.

NOTES

PILES FOR END BENT #1 & #2 SHALL BE DRIVEN TO A MINIMUM BEARING CAPACITY OF 530 kN EACH.

WHEN DRIVING PILES, THE MAXIMUM BLOW COUNT SHALL NOT BE EXCEEDED.

THE REQUIRED BEARING CAPACITY OF THE SPREAD FOOTINGS AT BENT #1 IS 480kPA. THE REQUIRED BEARING CAPACITY SHALL BE VERIFIED.

PILE EXCAVATION SHALL BE UTILIZED TO INSTALL PILES TO ELEVATION 235.196 AT END BENT #2. SEE "PILE EXCAVATION FOR ABUTMENT" SPECIAL PROVISION.

THE CONTRACTOR'S ATTENTION IS CALLED TO THE FACT THAT THE CENTERLINE OF THE FOOTINGS IS OFFSET FROM THE BENT 1 CONTROL LINE.

PROJECT NO. R-0609IA
GUILFORD COUNTY
STATION: 52+93.640 -L-

SHEET 2 OF 3

STATE OF NORTH CAROLINA
DEPARTMENT OF TRANSPORTATION
RALEIGH

GENERAL DRAWING FOR BRIDGE ON I-85 NORTHBOUND CD OVER US 311 BETWEEN SR 1145 AND NC 62

NORTH CAROLINA PROFESSIONAL SEAL 23926 ENGINEER BRIAN C. HANKS
5/22/06

REVISIONS							SHEET NO.
NO.	BY:	DATE:	NO.	BY:	DATE:		S-200
1			3				TOTAL SHEETS
2			4				321

DRAWN BY : QT NGUYEN DATE : 4-05
CHECKED BY : R. W. WRIGHT DATE : 5-05

15-MAY-2006 13:47
G:\STRUCT~1\frye\FINAL_~1\Str7\R023D5~1.DGN
dely

STR. #7

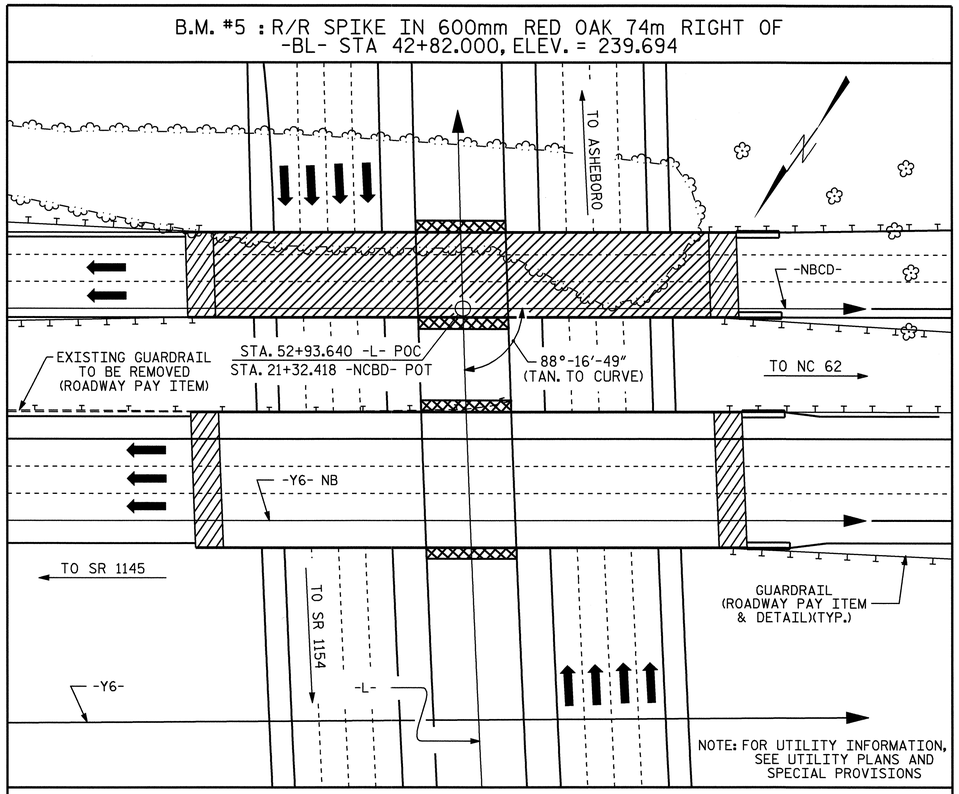

LOCATION SKETCH

NOTES

ALL DIMENSIONS ARE IN MILLIMETERS UNLESS OTHERWISE NOTED.

ALL ELEVATIONS ARE IN METERS.

ASSUMED LIVE LOAD = MS 18 OR ALTERNATE LOADING.

FOR OTHER DESIGN DATA AND GENERAL NOTES, SEE SHEET SNSM.

THIS BRIDGE HAS BEEN DESIGNED BY THE STRENGTH DESIGN METHOD AS SPECIFIED IN AASHTO STANDARD SPECIFICATIONS.

ALL STRUCTURAL STEEL SHALL BE AASHTO M270 GRADE 345W AND PAINTED IN ACCORDANCE WITH SYSTEM 4 OF ARTICLE 442-7 OF THE STANDARD SPECIFICATIONS UNLESS OTHERWISE NOTED ON THE PLANS.

THIS BRIDGE HAS BEEN DESIGNED IN ACCORDANCE WITH THE REQUIREMENTS OF THE AASHTO STANDARD SPECIFICATIONS FOR SEISMIC DESIGN OF HIGHWAY BRIDGES FOR SEISMIC PERFORMANCE CATEGORY A.

THE CONTRACTOR SHALL PROVIDE INDEPENDENT ASSURANCE SAMPLES OF REINFORCING STEEL AS FOLLOWS: FOR PROJECTS REQUIRING UP TO 360,000 kg OF REINFORCING STEEL, ONE 760mm SAMPLE OF EACH SIZE BAR USED, AND FOR PROJECTS REQUIRING OVER 360,000 kg OF REINFORCING STEEL, TWO 760mm SAMPLES OF EACH SIZE BAR USED. THE BARS FROM WHICH THE SAMPLES ARE TAKEN MUST THEN BE SPLICED WITH REPLACEMENT BARS OF THE SIZE AND LENGTH OF THE SAMPLE PLUS A MINIMUM LAP SPLICE OF THIRTY BAR DIAMETERS.

FOR FALSEWORK AND FORMWORK, SEE SPECIAL PROVISIONS.

FOR EROSION CONTROL MEASURES SEE EROSION CONTROL PLANS.

REMOVABLE FORMS MAY BE USED IN LIEU OF METAL STAY-IN-PLACE FORMS IN ACCORDANCE WITH ARTICLE 420-3 OF THE STANDARD SPECIFICATIONS.

THE CLASS AA CONCRETE IN THE BRIDGE DECK SHALL CONTAIN FLY ASH OR GROUND GRANULATED BLAST FURNACE SLAG AT THE SUBSTITUTION RATE SPECIFIED IN ARTICLE 1024-1 AND IN ACCORDANCE WITH ARTICLES 1024-5 AND 1024-6 OF THE STANDARD SPECIFICATIONS. NO PAYMENT WILL BE MADE FOR THIS SUBSTITUTION AS IT IS CONSIDERED INCIDENTAL TO THE COST OF THE REINFORCED CONCRETE DECK SLAB.

NEEDLE BEAMS WILL NOT BE ALLOWED UNLESS OTHERWISE CALLED FOR ON THE PLANS OR APPROVED BY THE ENGINEER.

FOR SUBMITTAL OF WORKING DRAWINGS, SEE SPECIAL PROVISIONS.

FOR METRIC STRUCTURAL STEEL, SEE SPECIAL PROVISIONS.

FOR CRANE SAFETY, SEE SPECIAL PROVISIONS.

WORK SHALL NOT BE STARTED ON THIS BRIDGE UNTIL ROADWAY SECTION HAS BEEN EXCAVATED.

FOR STEEL H PILES, SEE SPECIAL PROVISIONS.

TOTAL BILL OF MATERIAL

	FOUNDATION EXCAVATION	PILE EXCAVATION NOT IN SOIL	REINFORCED CONCRETE DECK SLAB	GROOVING BRIDGE FLOORS	CLASS A CONCRETE	BRIDGE APPROACH SLABS	REINFORCING STEEL	SPIRAL COLUMN REINFORCING STEEL	STRUCTURAL STEEL	HP 310 X 79 STEEL PILES		CONCRETE BARRIER RAIL	100mm SLOPE PROTECTION	POT BEARINGS	ELASTOMERIC BEARINGS	EVAZOTE JOINT SEALS
	LUMP SUM	METERS	SQ. METERS	SQ. METERS	CU. METERS	LUMP SUM	kg	kg	APPROX. kg	NO.	METERS	METERS	SQ. METERS	LUMP SUM	LUMP SUM	LUMP SUM
SUPERSTRUCTURE			1035.8	1031.0		LUMP SUM			184,380			166.180		LUMP SUM	LUMP SUM	LUMP SUM
END BENT 1					19.1		1808			11	66.0		175			
BENT 1	LUMP SUM				55.0		5737	423								
END BENT 2		50.3			18.9		1772			11	50.3		230			
TOTAL	LUMP SUM	50.3	1035.8	1031.0	93.0	LUMP SUM	9317	423	184,380	22	116.3	166.180	405	LUMP SUM	LUMP SUM	LUMP SUM

PROJECT NO. R-0609IA
GUILFORD COUNTY
STATION: 52+93.640 -L-

SHEET 3 OF 3

STATE OF NORTH CAROLINA
DEPARTMENT OF TRANSPORTATION
RALEIGH

GENERAL DRAWING
FOR BRIDGE ON I-85
NORTHBOUND CD OVER
US 311 BETWEEN
SR 1145 AND NC 62

NORTH CAROLINA PROFESSIONAL SEAL 23926 ENGINEER BRIAN C. HANKS
5/22/06

REVISIONS						SHEET NO.
NO.	BY:	DATE:	NO.	BY:	DATE:	S-201
1			3			TOTAL SHEETS
2			4			321

DRAWN BY : B.N. GRADY/QT NGUYEN DATE : 3-04/5-05
CHECKED BY : R. W. WRIGHT DATE : 5-05

15-MAY-2006 13:47
G:\STRUCT~1\frye\FINAL_~1\Str7\R023D5~1.DGN
dely

STR. #7

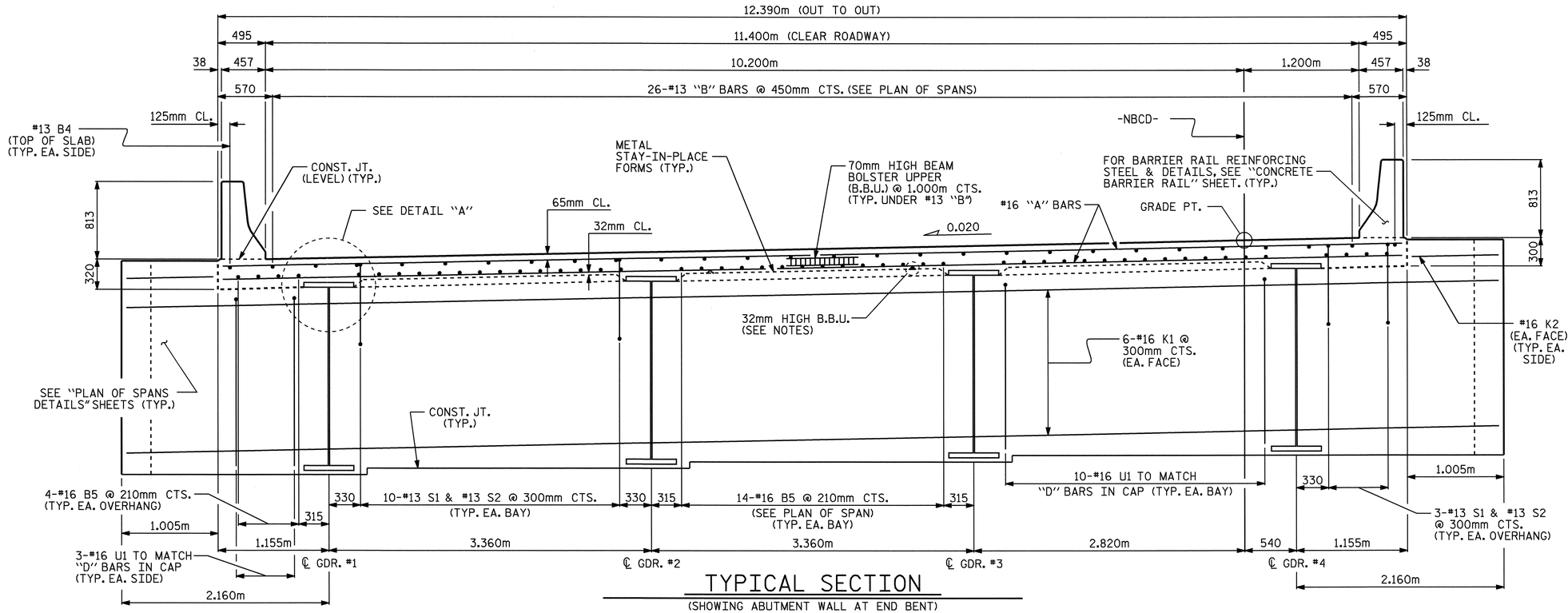

TYPICAL SECTION

(SHOWING ABUTMENT WALL AT END BENT)

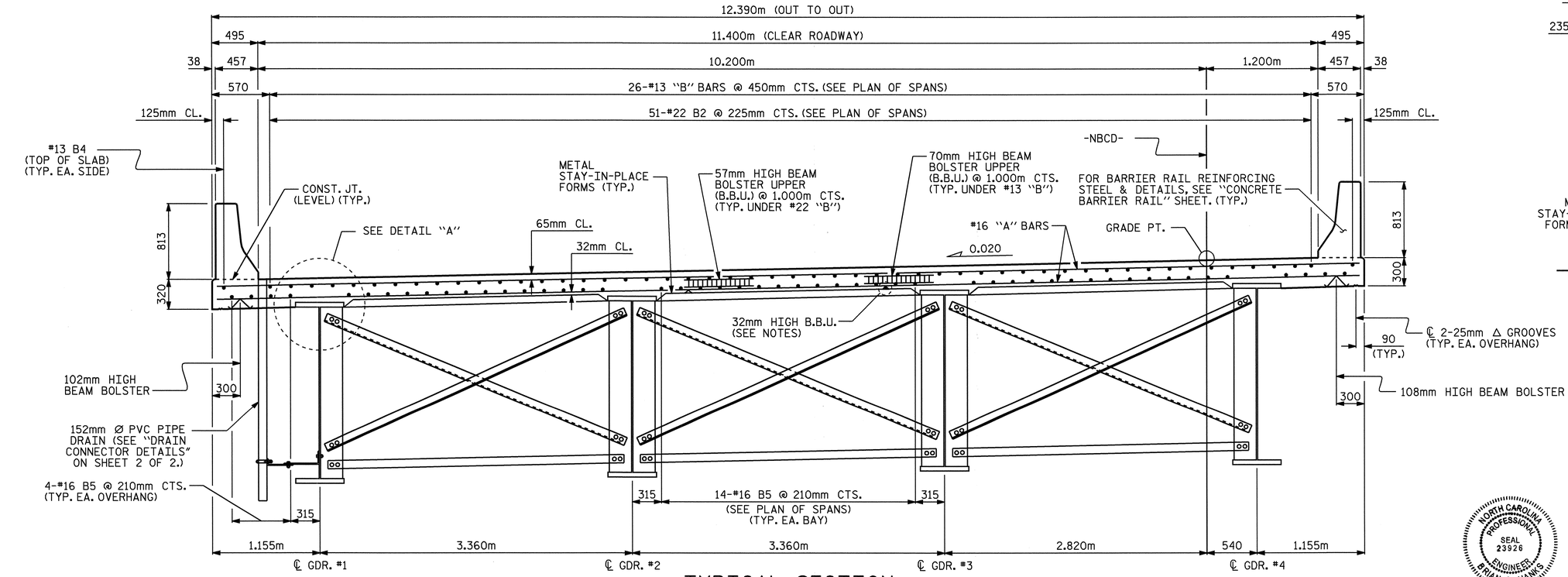

TYPICAL SECTION

(SHOWING BENT & INTERMEDIATE DIAPHRAGMS)

NOTES

PROVIDE 32mm HIGH BEAM BOLSTERS UPPER AT 1.2m CTS. ATOP THE METAL STAY-IN-PLACE FORMS TO SUPPORT THE BOTTOM MAT OF "A" BARS. WHEN USING REMOVABLE FORMS, PROVIDE CONTINUOUS HIGH CHAIRS FOR METAL DECK (C.H.C.M.) @ 1.2m CTS. WITH A HEIGHT TO SUPPORT THE BOTTOM MAT OF "A" BARS A CLEAR DISTANCE OF 65mm ABOVE THE TOP OF THE REMOVABLE FORM.

METAL STAY-IN-PLACE FORMS SHALL NOT BE WELDED TO BEAM OR GIRDER FLANGES IN THE ZONES REQUIRING CHARPY V-NOTCH TEST. SEE STRUCTURAL STEEL DETAIL SHEETS.

PREVIOUSLY CAST CONCRETE IN A CONTINUOUS UNIT SHALL HAVE ATTAINED A MINIMUM COMPRESSIVE STRENGTH OF 20.7 MPa BEFORE ADDITIONAL CONCRETE IS CAST IN THE UNIT.

BARRIER RAIL IN A CONTINUOUS UNIT SHALL NOT BE CAST UNTIL ALL SLAB CONCRETE IN THE UNIT HAS BEEN CAST AND HAS REACHED A MINIMUM COMPRESSIVE STRENGTH OF 20.7 MPa.

STRUCTURAL STEEL ERECTION IN A CONTINUOUS UNIT SHALL BE COMPLETE BEFORE FALSEWORK OR FORMS ARE PLACED ON THE UNIT.

THE CONTRACTOR MAY, WHEN NECESSARY, PROPOSE A SCHEME FOR AVOIDING INTERFERENCE BETWEEN METAL STAY-IN-PLACE FORM SUPPORTS OR FORMS AND BEAM/GIRDER STIFFENERS OR CONNECTOR PLATES. THE PROPOSAL SHALL BE INDICATED, AS APPROPRIATE, ON EITHER THE STEEL WORKING DRAWINGS OR THE METAL STAY-IN-PLACE FORM WORKING DRAWINGS.

REMOVABLE FORMS MAY BE USED IN LIEU OF METAL STAY-IN-PLACE FORMS IN ACCORDANCE WITH ARTICLE 420-3 OF THE STANDARD SPECIFICATIONS.

FOR WING ELEVATIONS AND DETAILS, SEE "PLAN OF SPANS DETAILS" SHEETS.

THE CONTRACTOR SHALL ADJUST THE GIRDER BUILDUPS AS NECESSARY TO INCORPORATE A MAXIMUM PERMISSIBLE VARIATION IN POT BEARING DEPTH OF 13mm, SEE SPECIAL PROVISION FOR POT BEARINGS.

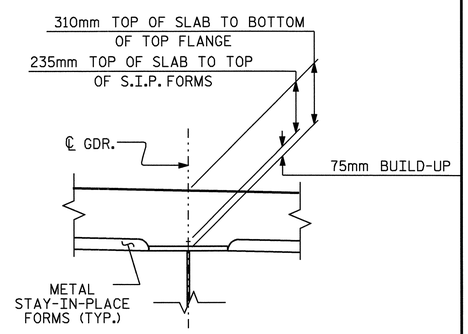

DETAIL "A"

PROJECT NO. R-0609IA

GUILFORD COUNTY

STATION: 52+93.640 -L-

SHEET 1 OF 2

STATE OF NORTH CAROLINA
DEPARTMENT OF TRANSPORTATION
RALEIGH

SUPERSTRUCTURE

TYPICAL SECTION

(NORTHBOUND COLLECTOR)

NORTH CAROLINA PROFESSIONAL SEAL 23926 ENGINEER BRIAN C. HANKS
5/22/06

REVISIONS								SHEET NO.
NO.	BY:	DATE:	NO.	BY:	DATE:			S-202
1			3					TOTAL SHEETS
2			4					321

DRAWN BY : P.C. BREWER/DGE DATE : 9/9/04
CHECKED BY : W.F. PARKER/ABN DATE : 9/24/04

15-MAY-2006 13:46
G:\STRUCT~1\frye\FINAL_~1\Str7\R0709F0~1.DGN
dely

STR. #7

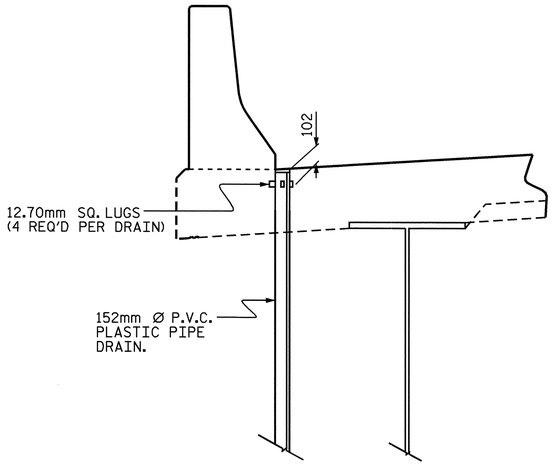

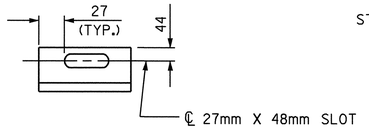

SECTION B-B

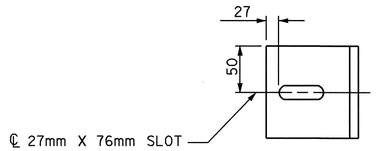

SECTION A-A

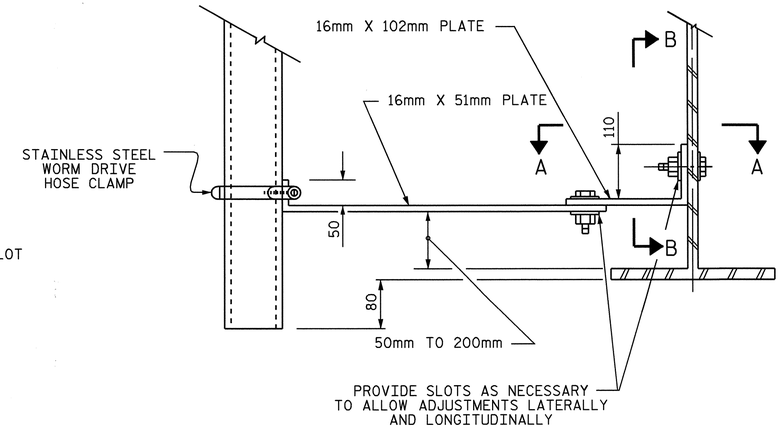

NOTES

BOLT SIZE FOR PIPE DRAIN BRACKETS TO BE SAME AS DIAPHRAGMS AND CROSSFRAME CONNECTIONS. STAINLESS STEEL WORM DRIVE HOSE CLAMP SHALL BE COMMERCIAL QUALITY.

PLATES FOR PIPE DRAIN BRACKETS SHALL CONFORM TO AASHTO M270 GRADE 250 STEEL OR APPROVED EQUAL.

PVC DECK DRAINS SHALL BE PAINTED WITH TWO COATS OF BROWN PRIMER MEETING THE REQUIREMENTS OF ARTICLE 1080-12 OF THE STANDARD SPECIFICATIONS. EACH COAT SHALL BE 0.050mm THICK. DECK DRAINS SHALL BE ROUGHENED PRIOR TO PAINTING. NO SEPARATE PAYMENT SHALL BE MADE FOR PAINTING PVC DECK DRAINS AS THIS IS CONSIDERED INCIDENTAL TO THE PAY ITEM FOR REINFORCED CONCRETE DECK SLAB.

TOP OF FLOOR DRAIN TO BE SET 10mm BELOW SURFACE OF SLAB.

4 - 13mm SQUARE LUGS TO BE GLUED TO THE PVC PLASTIC PIPE AT EQUAL SPACES AROUND THE PIPE DRAIN APPROXIMATELY 100mm FROM THE TOP OF THE PIPE.

COUPLING IN DRAIN PIPE WILL BE PERMITTED AS APPROVED BY THE ENGINEER.

THE 152mm DIA. PVC PIPE AND FITTINGS SHALL BE SCHEDULE 40 AND CONFORM TO ASTM D1785.

DRAIN CONNECTOR DETAILS

(8 DRAINS REQUIRED)

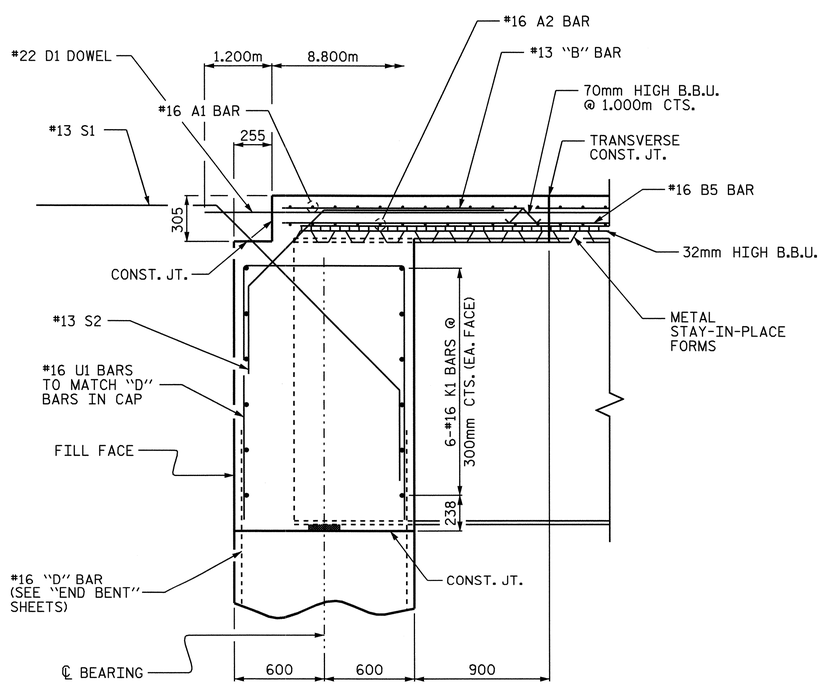

SECTION AT END BENT

(SHOWING ABUTMENT WALL)

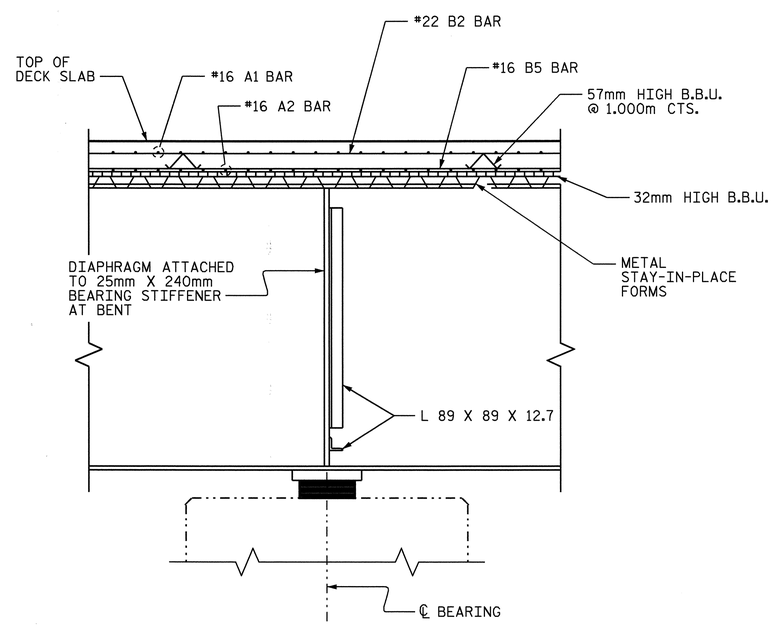

SECTION AT BENT

PROJECT NO. R-0609IA
GUILFORD COUNTY
STATION: 52+93.640 -L-

SHEET 2 OF 2

STATE OF NORTH CAROLINA
DEPARTMENT OF TRANSPORTATION
RALEIGH

SUPERSTRUCTURE
TYPICAL SECTION DETAILS
(NORTHBOUND COLLECTOR)

NORTH CAROLINA PROFESSIONAL SEAL 23926 ENGINEER BRIAN C. HANKS
11/9/06

REVISIONS						SHEET NO.
NO.	BY:	DATE:	NO.	BY:	DATE:	S-203
1			3			TOTAL SHEETS
2			4			321

DRAWN BY : P.C. BREWER/DGE DATE : 9/9/04
CHECKED BY : W.E. PARKER/ABN DATE : 9/24/04

09-NOV-2006 13:56
R:\Structures\frye\FINAL_PLANS\Str7\R0609IA_sd_TS_STR.7REV.dgn
bhanks

STR. #7

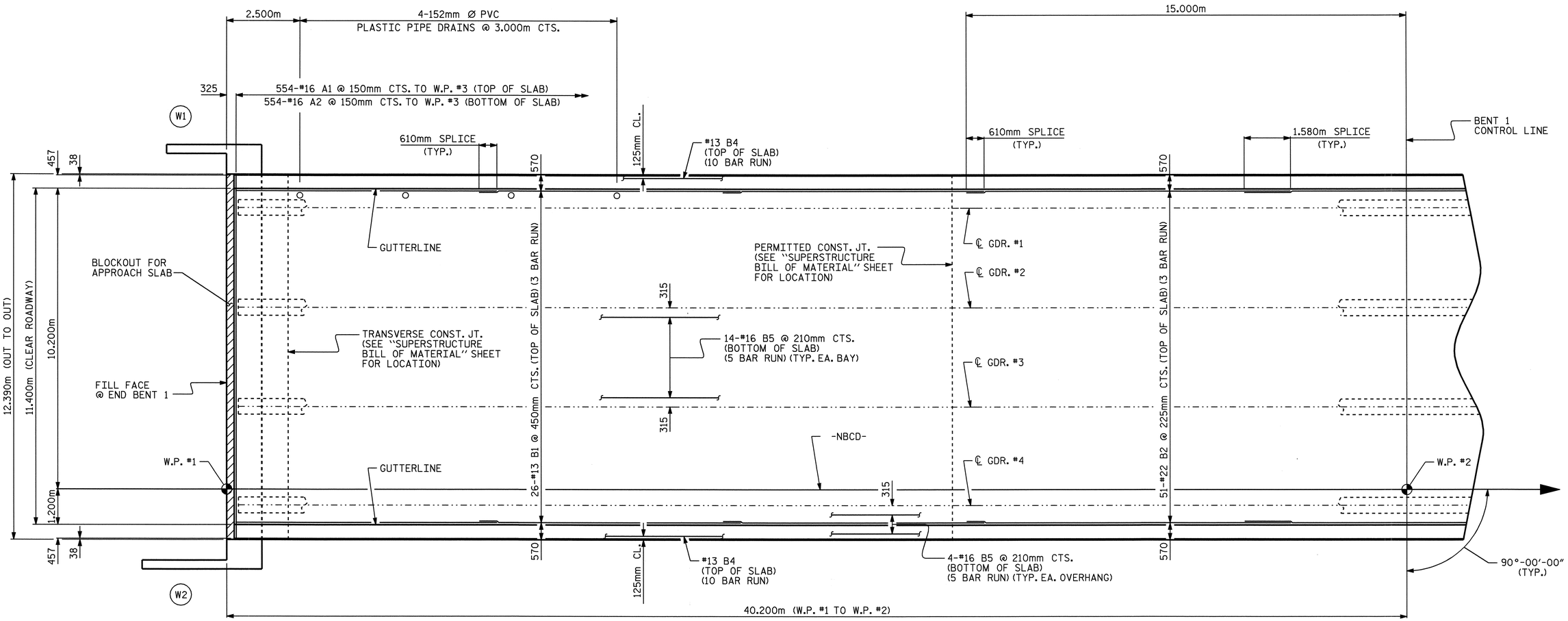

PLAN OF SPAN "A"

NOTES:

FOR BARRIER RAIL REINFORCING STEEL AND DETAILS, SEE "CONCRETE BARRIER RAIL" SHEET.

FOR REINFORCING STEEL IN ABUTMENTS, SEE "PLAN OF SPAN DETAILS" SHEETS.

PROJECT NO. R-0609IA
GUILFORD COUNTY
STATION: 52+93.640 -L-

SHEET 1 OF 5

STATE OF NORTH CAROLINA
DEPARTMENT OF TRANSPORTATION
RALEIGH

SUPERSTRUCTURE

PLAN OF SPANS
SPAN A
(NORTHBOUND COLLECTOR)

NORTH CAROLINA PROFESSIONAL SEAL 23926 ENGINEER BRIAN C. HANKS
5/22/06

REVISIONS						SHEET NO.
NO.	BY:	DATE:	NO.	BY:	DATE:	S-204
1			3			TOTAL SHEETS
2			4			321

DRAWN BY : P.C. BREWER/DGE DATE : 9/10/04
CHECKED BY : W.F. PARKER/ABN DATE : 9/24/04

15-MAY-2006 13:45
G:\STRUCT~1\frye\FINAL_~1\Str7\R07503~1.DGN
dely

STR. #7

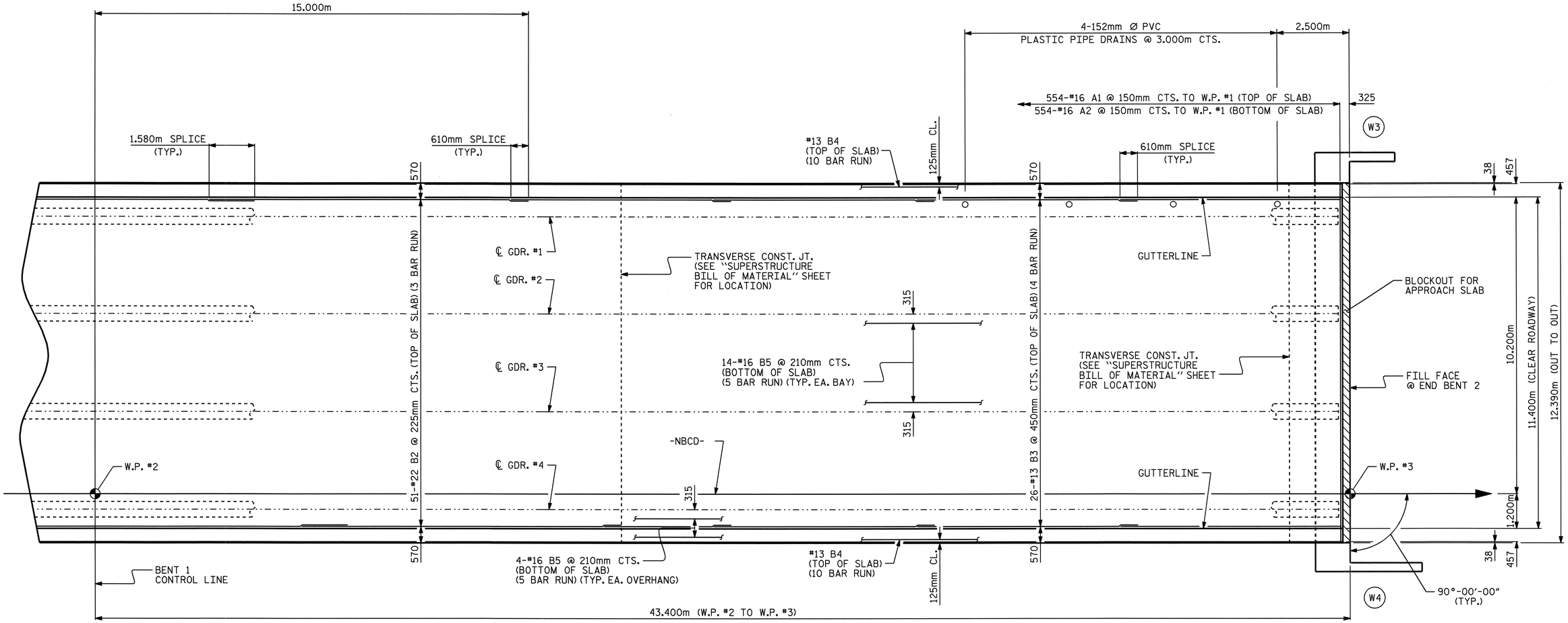

PLAN OF SPAN "B"

NOTES:

FOR BARRIER RAIL REINFORCING STEEL AND DETAILS, SEE "CONCRETE BARRIER RAIL" SHEET.

FOR REINFORCING STEEL IN ABUTMENTS, SEE "PLAN OF SPAN DETAILS" SHEETS.

PROJECT NO. R-0609IA
GUILFORD COUNTY
STATION: 52+93.640 -L-

SHEET 2 OF 5

STATE OF NORTH CAROLINA
DEPARTMENT OF TRANSPORTATION
RALEIGH

SUPERSTRUCTURE

PLAN OF SPANS
SPAN B
(NORTHBOUND COLLECTOR)

NORTH CAROLINA PROFESSIONAL SEAL 23926 ENGINEER BRIAN C. HANKS
5/22/06

REVISIONS						SHEET NO.
NO.	BY:	DATE:	NO.	BY:	DATE:	S-205
1			3			TOTAL SHEETS
2			4			321

DRAWN BY : P.C. BREWER/DGE DATE : 9/10/04
CHECKED BY : W.F. PARKER/ABN DATE : 9/24/04

15-MAY-2006 13:44
G:\STRUCT~1\frye\FINAL_~1\Str7\R07503~1.DGN
dely

STR. #7

NOTES:

FOR SECTION THROUGH ABUTMENT, SEE "TYPICAL SECTION DETAILS", SHEET 2 OF 2.

FOR TRANSVERSE CONSTRUCTION JOINT DETAILS AND LOCATION, SEE "SUPERSTRUCTURE - BILL OF MATERIAL" SHEET.

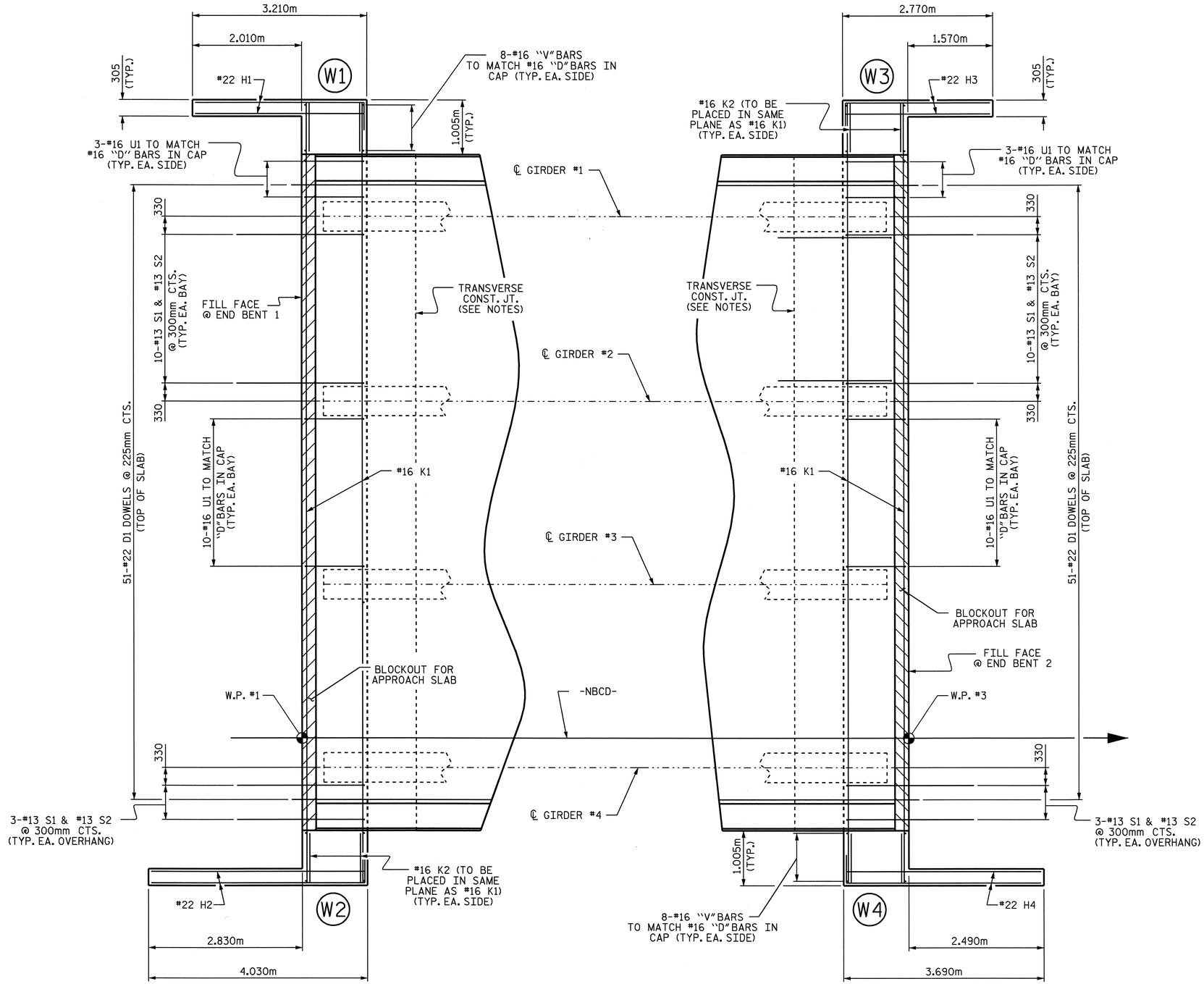

PLAN OF ABUTMENT WALL @ END BENT 1

PLAN OF ABUTMENT WALL @ END BENT 2

PROJECT NO. R-0609IA
GUILFORD COUNTY
STATION: 52+93.640 -L-

SHEET 3 OF 5

STATE OF NORTH CAROLINA
DEPARTMENT OF TRANSPORTATION
RALEIGH

SUPERSTRUCTURE
PLAN OF SPANS
DETAILS
(NORTHBOUND COLLECTOR)

NORTH CAROLINA PROFESSIONAL SEAL 23926 ENGINEER BRIAN C. HANKS
11/9/06

REVISIONS						SHEET NO.
NO.	BY:	DATE:	NO.	BY:	DATE:	S-206
1			3			TOTAL SHEETS
2			4			321

DRAWN BY : P.C. BREWER/DGE DATE : 9/10/04
CHECKED BY : W.E. PARKER/ABN DATE : 9/24/04

09-NOV-2006 13:57
R:\Structures\frye\FINAL_PLANS\Str7\R0609IA_sd_S*_STR.7REV.dgn
bhanks

STR. #7

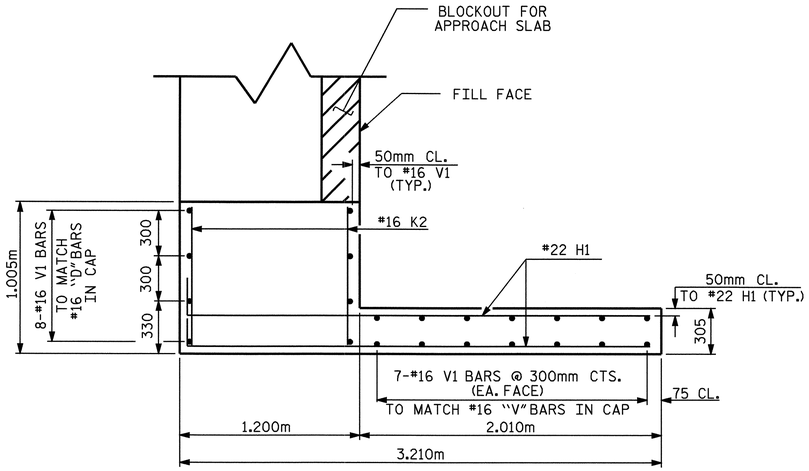

PLAN - W1

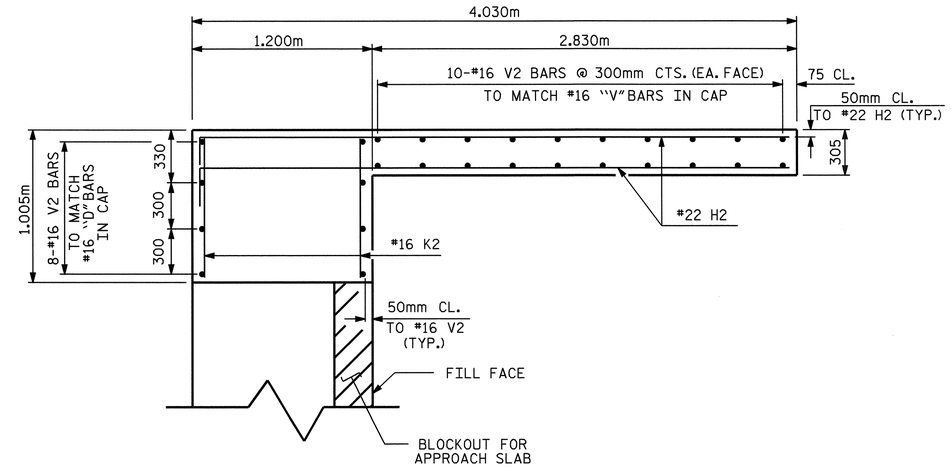

PLAN - W2

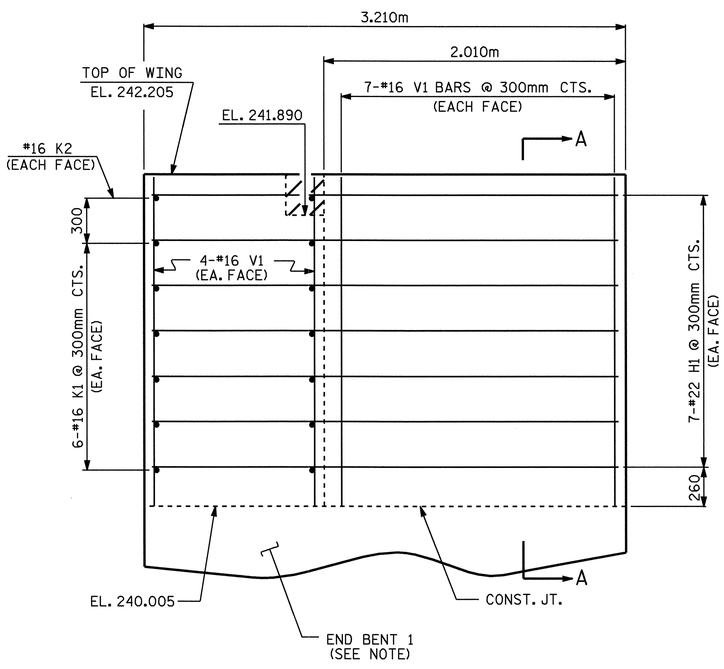

ELEVATION - W1

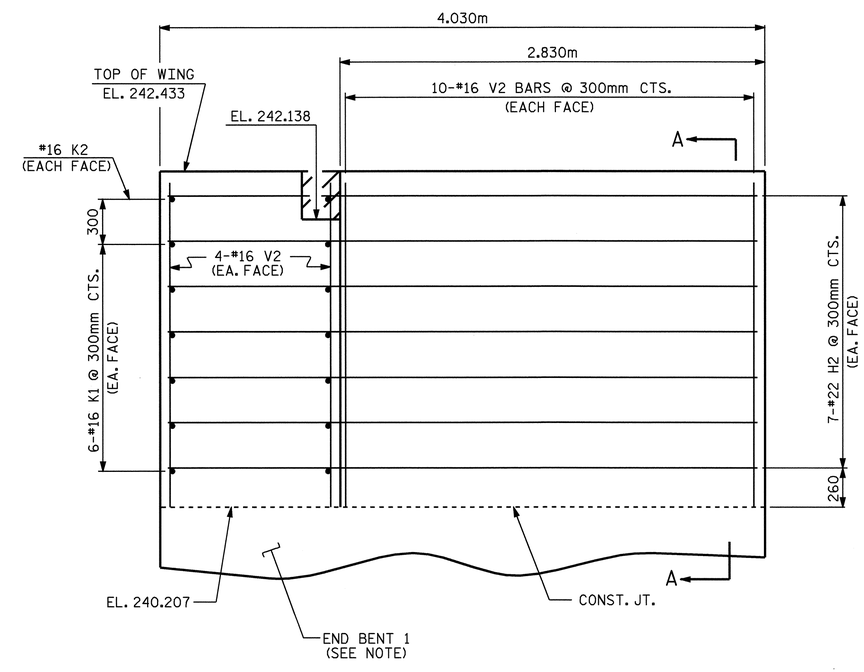

ELEVATION - W2

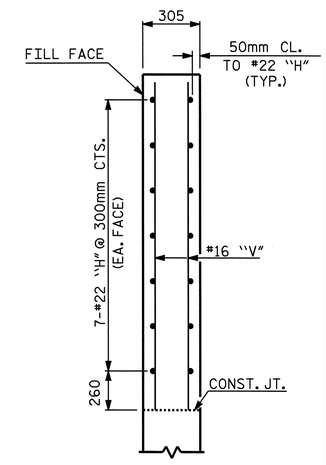

SECTION A-A

ABUTMENT WINGS @ END BENT 1

NOTE: FOR END BENT 1 REINFORCING STEEL AND DETAILS, SEE "SUBSTRUCTURE, END BENT 1" SHEETS.

PROJECT NO. R-0609IA
GUILFORD COUNTY
STATION: 52+93.640 -L-

SHEET 4 OF 5

STATE OF NORTH CAROLINA
DEPARTMENT OF TRANSPORTATION
RALEIGH

SUPERSTRUCTURE
PLAN OF SPANS
DETAILS
(NORTHBOUND COLLECTOR)

NORTH CAROLINA PROFESSIONAL SEAL 23926 ENGINEER BRIAN C. HAWKS
5/22/06

REVISIONS								SHEET NO.
NO.	BY:	DATE:	NO.	BY:	DATE:			S-207
1			3					TOTAL SHEETS
2			4					321

DRAWN BY : P.C.BREWER/DGE DATE : 9/9/04
CHECKED BY : W.F.PARKER/ABN DATE : 9/24/04

15-MAY-2006 13:44
G:\STRUCT~1\frye\FINAL_~1\Str7\R07503~1.DGN
daly

STR. #7

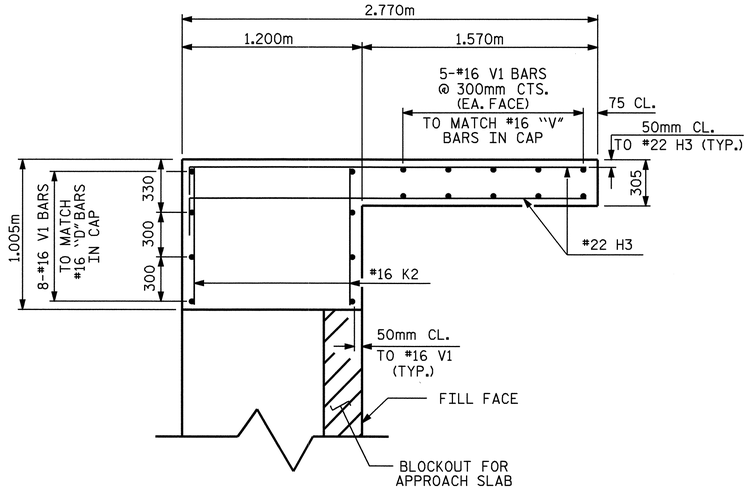

PLAN - W3

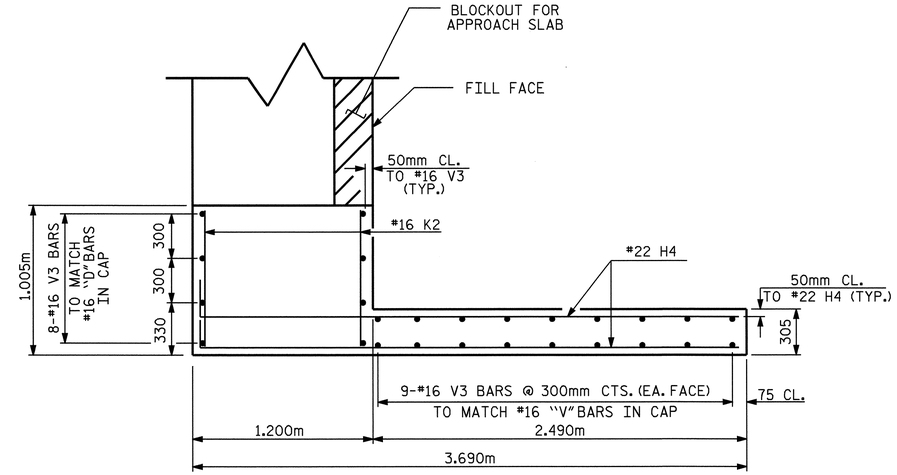

PLAN - W4

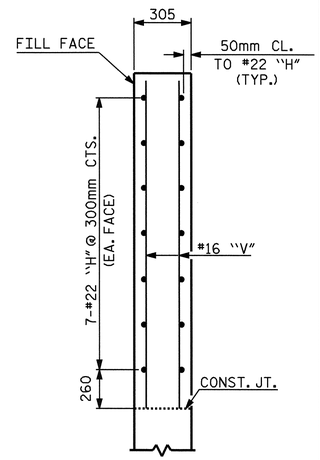

SECTION A-A

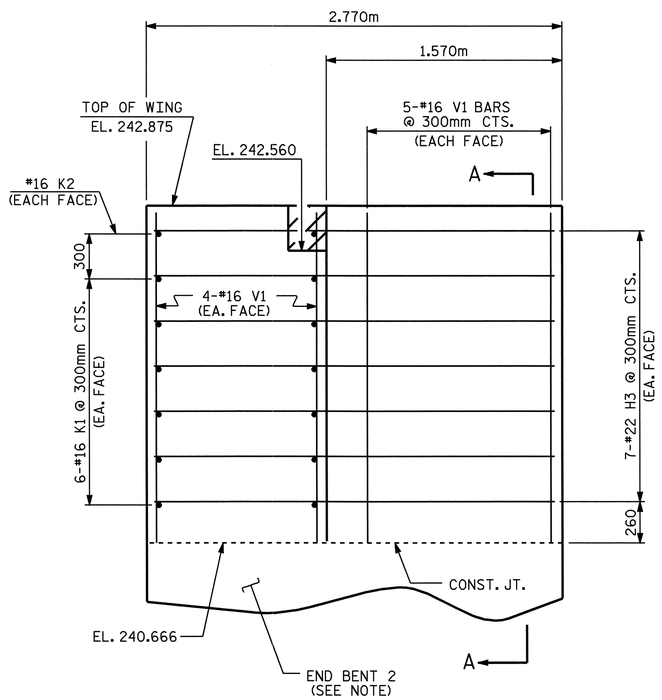

ELEVATION - W3

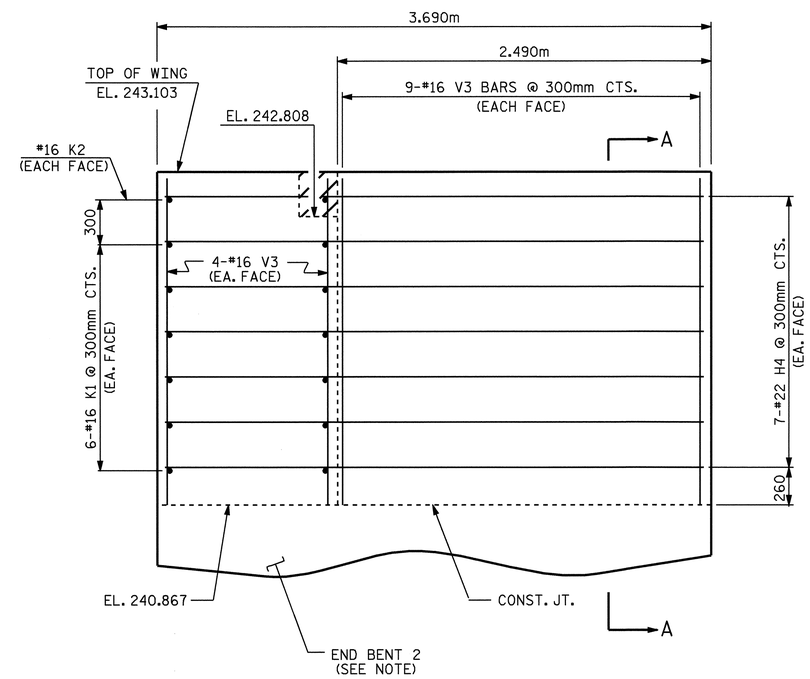

ELEVATION - W4

ABUTMENT WINGS @ END BENT 2

NOTE: FOR END BENT 2 REINFORCING STEEL AND DETAILS, SEE "SUBSTRUCTURE, END BENT 2" SHEETS.

PROJECT NO. R-0609IA
GUILFORD COUNTY
STATION: 52+93.640 -L-

SHEET 5 OF 5

STATE OF NORTH CAROLINA
DEPARTMENT OF TRANSPORTATION
RALEIGH

SUPERSTRUCTURE
PLAN OF SPANS
DETAILS
(NORTHBOUND COLLECTOR)

NORTH CAROLINA PROFESSIONAL SEAL 23926 ENGINEER BRIAN C. HANKS
5/22/06

REVISIONS						SHEET NO.
NO.	BY:	DATE:	NO.	BY:	DATE:	S-208
1			3			TOTAL SHEETS
2			4			321

DRAWN BY : P.C.BREWER/DGE DATE : 9/9/04
CHECKED BY : W.F.PARKER/ABN DATE : 9/24/04

15-MAY-2006 13:44
G:\STRUCT~1\frye\FINAL_~1\Str7\R07503~1.DGN
dely

STR. #7

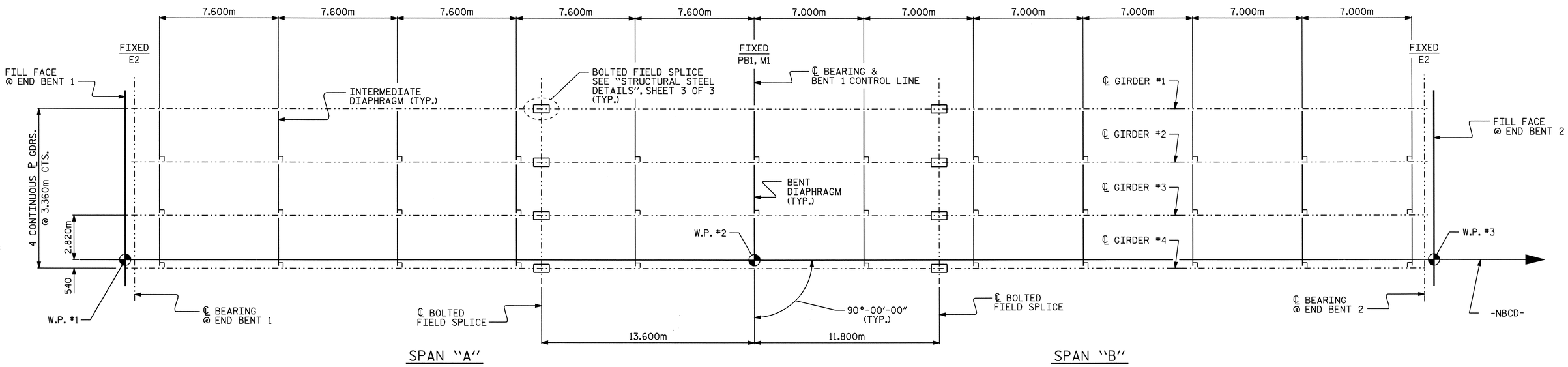

FRAMING PLAN

PROJECT NO. R-0609IA
GUILFORD COUNTY
STATION: 52+93.640 -L-

STATE OF NORTH CAROLINA
DEPARTMENT OF TRANSPORTATION
RALEIGH

SUPERSTRUCTURE

FRAMING PLAN

(NORTHBOUND COLLECTOR)

NORTH CAROLINA PROFESSIONAL SEAL 23926 ENGINEER BRIAN C. HAWKS
5/22/06

REVISIONS						SHEET NO.
NO.	BY:	DATE:	NO.	BY:	DATE:	S-209
1			3			TOTAL SHEETS
2			4			321

DRAWN BY : P.C. BREWER/DGE DATE : 9/10/04
CHECKED BY : W.F. PARKER/ABN DATE : 9/24/04

15-MAY-2006 13:42
G:\STRUCT~1\frye\FINAL_~1\Str7\ROB03I~1.DGN
dely

STR. #7

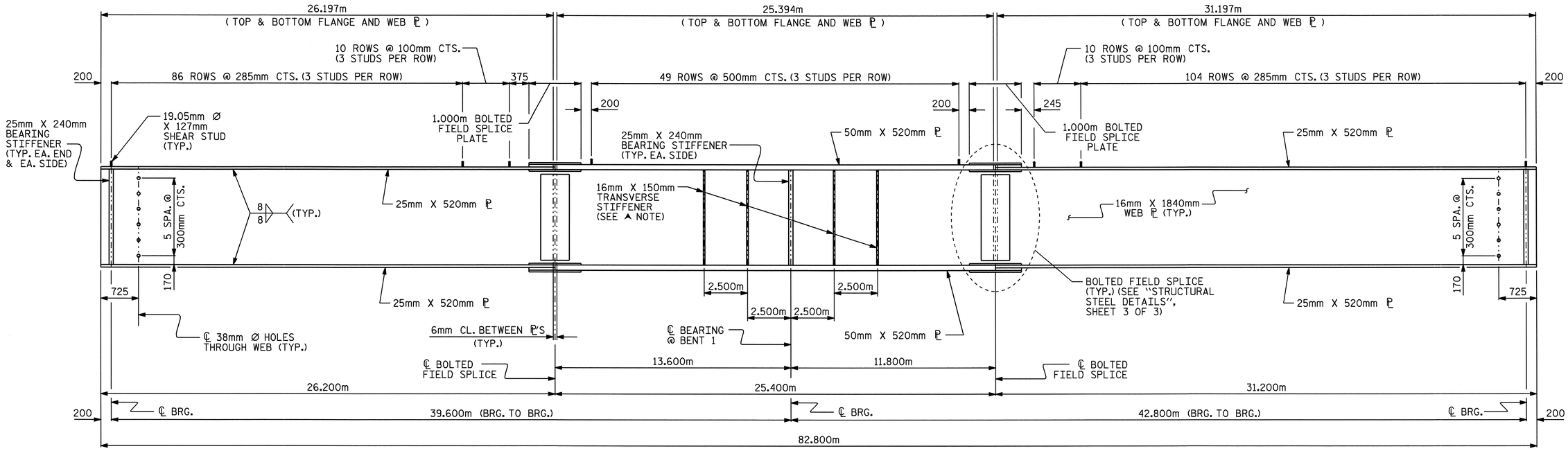

ELEVATION OF GIRDER

▲ NOTE:
TRANSVERSE STIFFENERS ARE TO BE PLACED ON ONE SIDE OF GIRDERS ONLY. TRANSVERSE STIFFENERS ARE NOT TO BE PLACED ON THE OUTSIDE OF EXTERIOR GIRDERS.

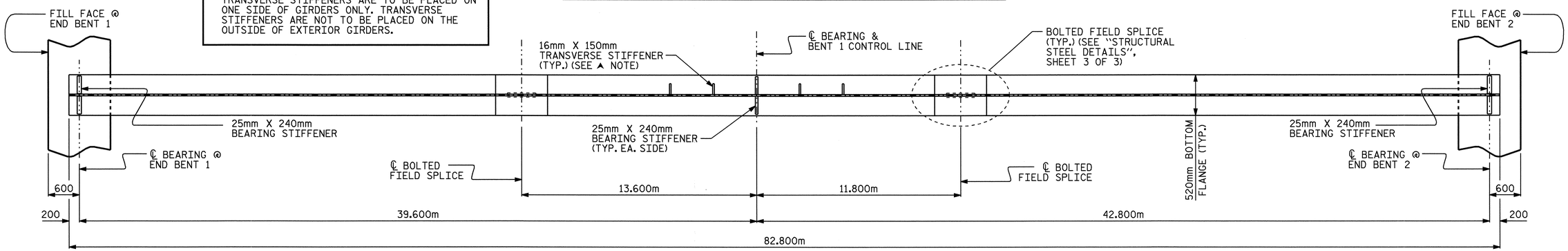

BOTTOM FLANGE DETAIL

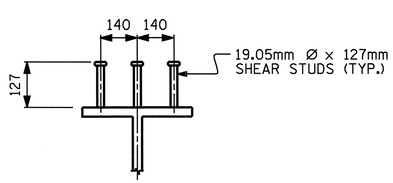

SHEAR STUD DETAILS

(TYP. EA. GIRDER)

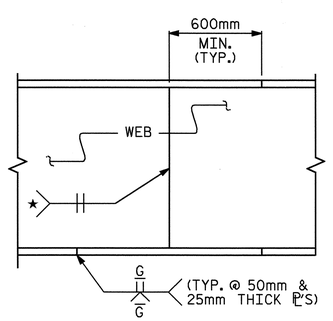

★ GRIND SMOOTH AND FLUSH ON OUTER FACE OF EXTERIOR BEAMS /GIRDERS

PERMISSIBLE SHOP FLANGE AND WEB SPLICE

PROJECT NO. R-0609IA
GUILFORD COUNTY
STATION: 52+93.640 -L-

SHEET 1 OF 3

STATE OF NORTH CAROLINA
DEPARTMENT OF TRANSPORTATION
RALEIGH

SUPERSTRUCTURE
STRUCTURAL STEEL DETAILS
(NORTHBOUND COLLECTOR)

NORTH CAROLINA PROFESSIONAL SEAL 23926 ENGINEER BRIAN C. HANKS
5/22/06

REVISIONS						SHEET NO.
NO.	BY:	DATE:	NO.	BY:	DATE:	S-210
1			3			TOTAL SHEETS
2			4			321

DRAWN BY : P.C. BREWER/DGE DATE : 9/10/04
CHECKED BY : W.F. PARKER/ABN DATE : 9/24/04

15-MAY-2006 13:41
G:\STRUCT~1\frye\FINAL_~1\Str7\R0711I3~1.DGN
dely

STR. #7

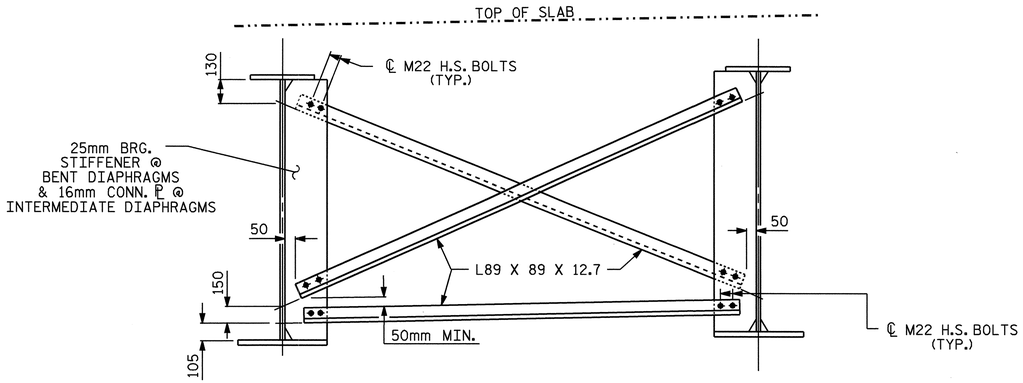

TYPICAL BENT & INTERMEDIATE DIAPHRAGM

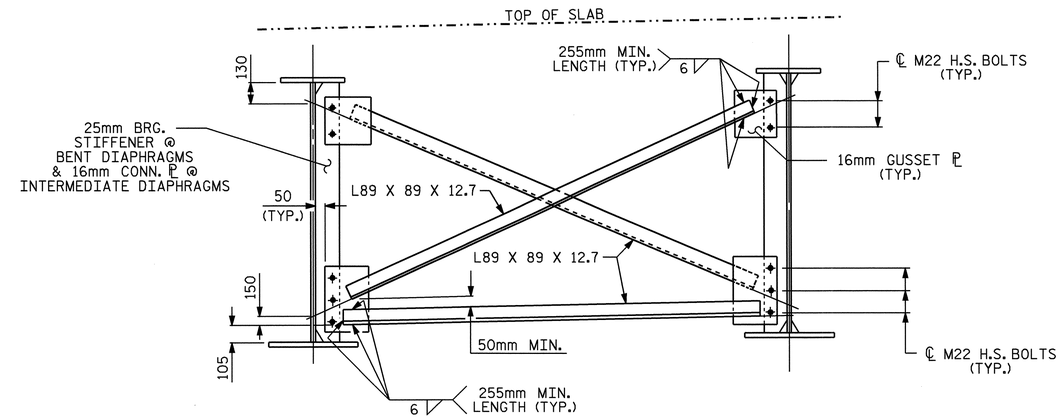

OPTIONAL BENT & INTERMEDIATE DIAPHRAGM

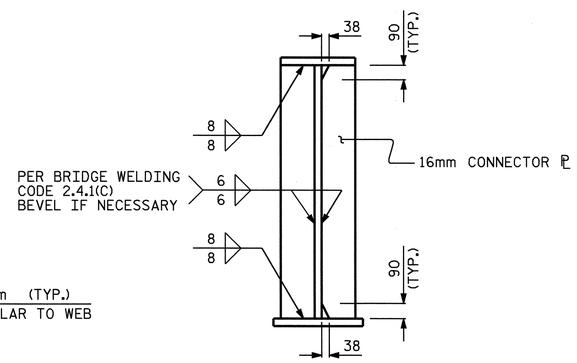

CONNECTOR ℙ

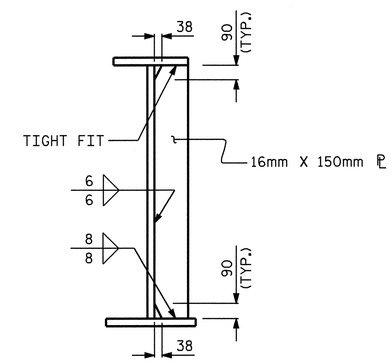

TRANSVERSE STIFFENER

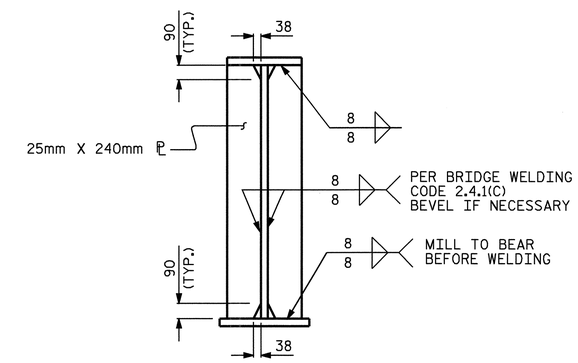

BEARING STIFFENER

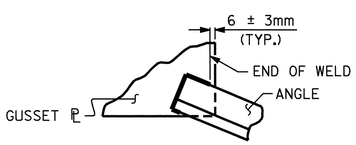

TYPICAL ANGLE TO GUSSET PLATE CONNECTIONS

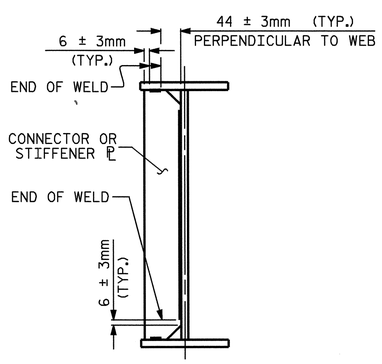

TYPICAL STIFFENER OR CONNECTOR PLATE CONNECTIONS

WELD TERMINATION DETAILS

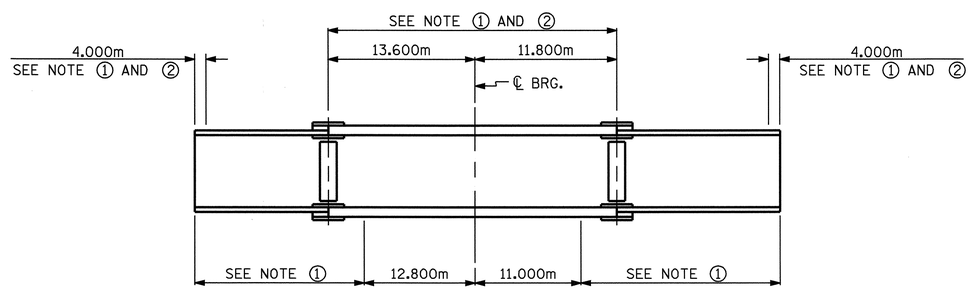

NOTE ①: CHARPY V-NOTCH TESTS ARE REQUIRED FOR ALL TOP OR BOTTOM FLANGE PLATES WHICH FALL WITHIN THESE LIMITS, ALL WEB PLATES, AND ALL SPLICE PLATES. IF A PERMITTED SHOP FLANGE SPLICE IS NOT USED, CHARPY V-NOTCH TESTS WILL BE REQUIRED FOR THE ENTIRE FLANGE PLATE. FOR CHARPY V-NOTCH TESTS, SEE ARTICLE 1072-9 OF THE STANDARD SPECIFICATIONS.

NOTE ②: NO WELDING OF FORMS OR FALSEWORK TO THE TOP FLANGE WILL BE PERMITTED IN THIS REGION.

CHARPY V-NOTCH TESTS FOR CONTINUOUS PLATE GIRDERS

PROJECT NO. R-0609IA
GUILFORD COUNTY
STATION: 52+93.640 -L-

SHEET 2 OF 3

STATE OF NORTH CAROLINA
DEPARTMENT OF TRANSPORTATION
RALEIGH

SUPERSTRUCTURE

STRUCTURAL STEEL DETAILS

(NORTHBOUND COLLECTOR)

NORTH CAROLINA PROFESSIONAL SEAL 23926 ENGINEER BRIAN C. HAWKS
5/22/06

REVISIONS						SHEET NO.
NO.	BY:	DATE:	NO.	BY:	DATE:	S-211
1			3			TOTAL SHEETS
2			4			321

DRAWN BY : P.C. BREWER/DGE DATE : 9/10/04
CHECKED BY : W.F. PARKER/ABN DATE : 9/24/04

15-MAY-2006 13:40
G:\STRUCT~1\frye\FINAL_~1\Str7\R0711I3~1.DGN
dely

STR. #7

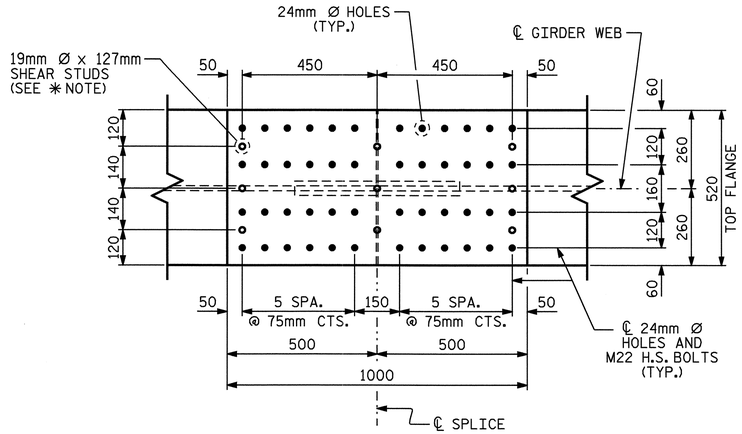

PLAN (TOP OF TOP FLANGE)

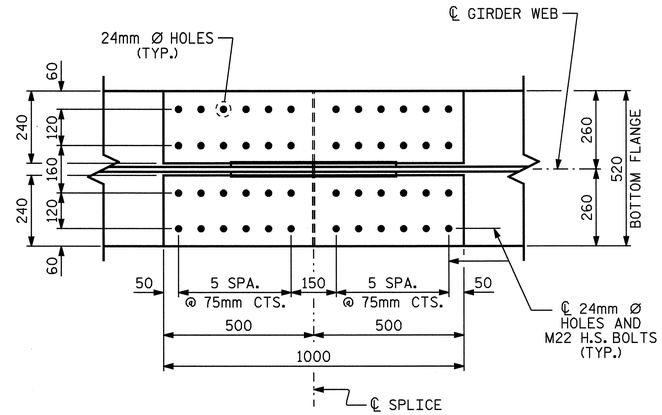

PLAN (TOP OF BOTTOM FLANGE)

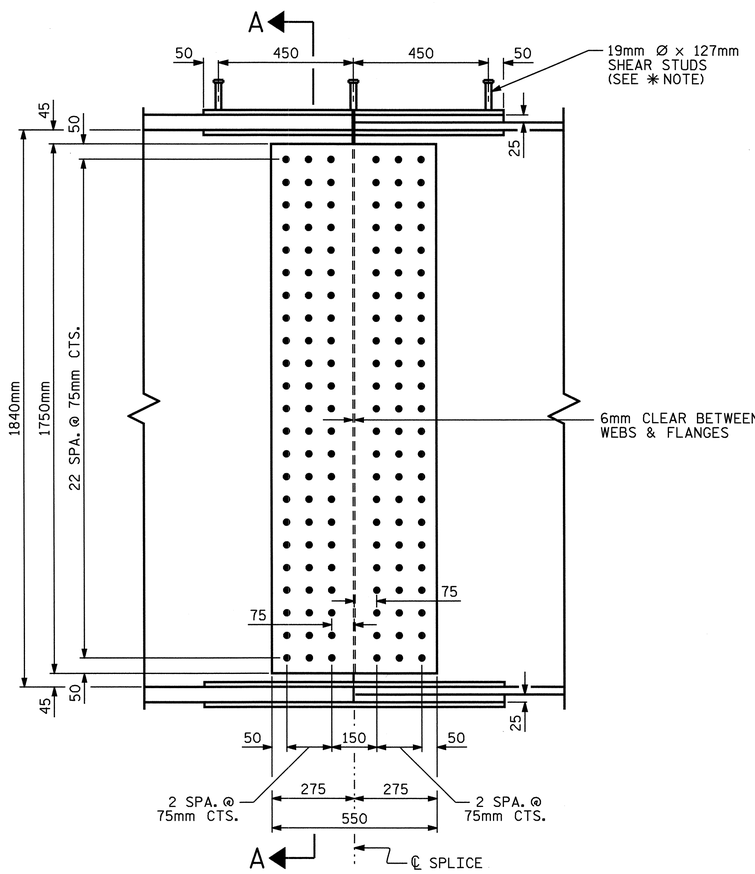

ELEVATION

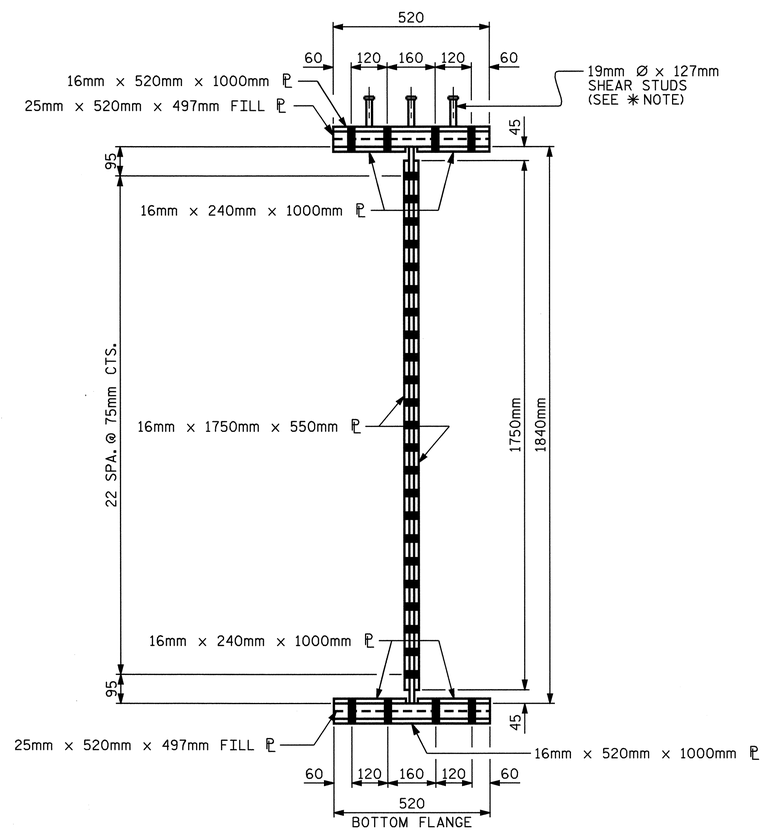

SECTION A-A

BOLTED FIELD SPLICE DETAILS

(TYPICAL EACH FIELD SPLICE)

NOTES:

ALL STRUCTURAL STEEL SHALL BE AASHTO M270 GRADE 345W AND PAINTED IN ACCORDANCE WITH SYSTEM 4 OF ARTICLE 442-7 OF THE STANDARD SPECIFICATIONS UNLESS OTHERWISE NOTED ON THE PLANS.

ALL DIMENSIONS SHOWN ARE HORIZONTAL OR VERTICAL, UNLESS OTHERWISE NOTED.

ALL FIELD CONNECTIONS TO BE 22.23mm HIGH STRENGTH BOLTS UNLESS OTHERWISE NOTED.

BEARING STIFFENERS ARE TO BE PLACED NORMAL TO THE WEB OF THE GIRDER AND SHALL BE PLUMB.

CHARPY V-NOTCH TEST IS REQUIRED, SEE SHEET 2 OF 3.

SHOP SPLICES ARE PERMITTED TO LIMIT THE MAXIMUM REQUIRED FLANGE PIECE LENGTHS TO 18 METERS AND WEB PIECE LENGTHS TO 14 METERS. PERMITTED FLANGE AND WEB SHOP SPLICES SHALL NOT BE LOCATED WITHIN 4.5 METERS OF MAXIMUM DEAD LOAD DEFLECTION NOR WITHIN 4.5 METERS OF INTERMEDIATE BEARINGS OF CONTINUOUS UNITS. KEEP 600mm MINIMUM BETWEEN WEB AND FLANGE SHOP SPLICES. KEEP 150mm MINIMUM BETWEEN CONNECTOR PLATE OR TRANSVERSE STIFFENER WELDS AND WEB OR FLANGE SHOP SPLICES.

STUDS ON GIRDERS MAY BE SHIFTED UP TO 25mm IF NECESSARY TO CLEAR FLANGE SPLICE WELD.

END OF GIRDERS SHALL BE PLUMB.

✳ SHEAR STUDS ARE TO BE SHOP WELDED ON TOP OF PLATE BEFORE FIELD ASSEMBLY.

AT THE CONTRACTOR'S OPTION, THE DIAPHRAGM WITH THE WELDED GUSSET PLATES MAY BE USED IN LIEU OF THE DIAPHRAGM WITH BOLTED ANGLES AT NO ADDITIONAL COST TO THE DEPARTMENT.

TENSION ON THE AASHTO M164 BOLTS SHALL BE CALIBRATED USING DIRECT TENSION INDICATOR WASHERS IN ACCORDANCE WITH ARTICLE 440-10 OF THE STANDARD SPECIFICATIONS.

BEARING STIFFENER MAY REQUIRE COPING IF WIDER THAN BOTTOM FLANGE TO AVOID INTERFERENCE WITH THE ANCHOR BOLT.

TRANSVERSE STIFFENERS SHALL NOT BE PLACED ON THE OUTSIDE OF EXTERIOR GIRDERS.

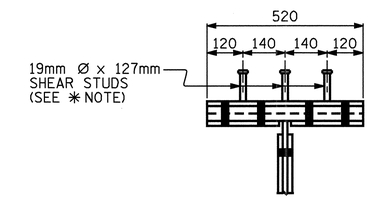

SHEAR STUD DETAIL
FOR TOP FLANGE SPLICE PLATE

PROJECT NO. R-0609IA
GUILFORD COUNTY
STATION: 52+93.640 -L-

SHEET 3 OF 3

STATE OF NORTH CAROLINA
DEPARTMENT OF TRANSPORTATION
RALEIGH

SUPERSTRUCTURE
STRUCTURAL STEEL DETAILS
(NORTHBOUND COLLECTOR)

NORTH CAROLINA PROFESSIONAL SEAL 23926 ENGINEER BRIAN C. HANKS
5/22/06

REVISIONS								SHEET NO.
NO.	BY:	DATE:	NO.	BY:	DATE:			S-212
1			3					TOTAL SHEETS
2			4					321

DRAWN BY : P.C. BREWER/DGE DATE : 9/10/04
CHECKED BY : W.F. PARKER/ABN DATE : 9/24/04

STR. #7

NOTES

FOR ELASTOMERIC BEARINGS, SEE SPECIAL PROVISIONS.

— LOAD RATINGS —	
	MAX.D.L.+L.L.
TYPE III	512 kN

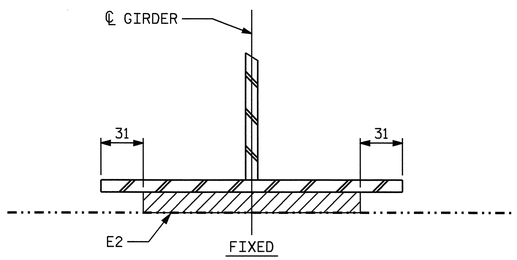

SECTION

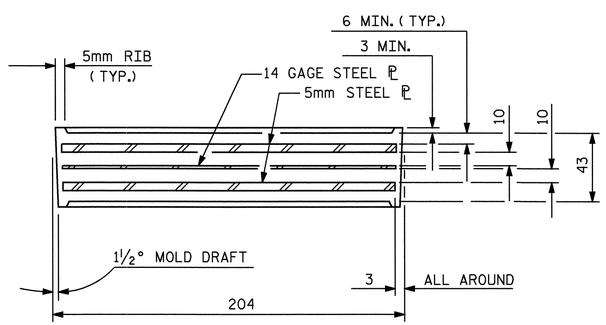

TYPICAL SECTION OF ELASTOMERIC BEARINGS

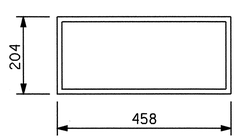

E2 (8 REQ'D)

PLAN VIEW OF ELASTOMERIC BEARING

TYPE III

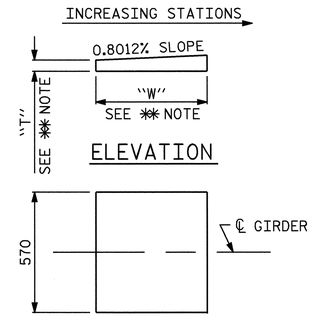

ELEVATION

PLAN

✱✱ NOTE:
DIMENSIONS "W" AND "T" ARE TO BE DETERMINED BY THE MANUFACTURER.

SOLE PLATE DETAILS

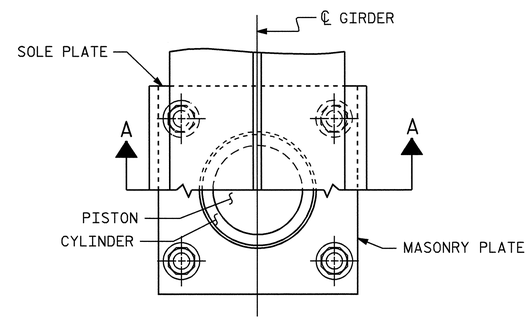

CUT-AWAY PLAN

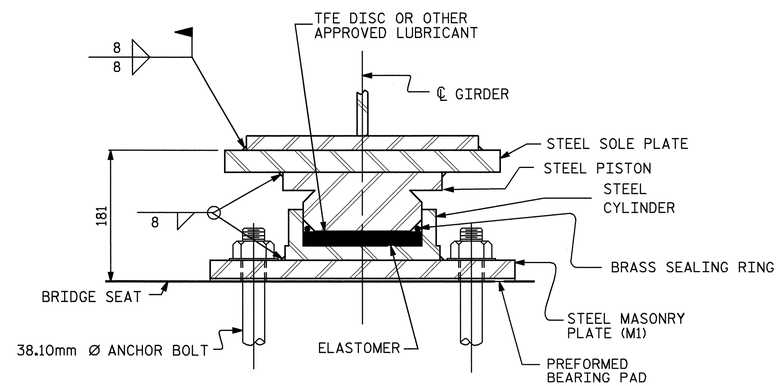

SECTION A-A

PB1, FIXED
(4 REQ'D.)

POT BEARING DETAILS

NOTES

FOR POT BEARINGS, SEE SPECIAL PROVISIONS.

AT ALL POINTS OF SUPPORT, NUTS FOR ANCHOR BOLTS SHALL BE TIGHTENED FINGER TIGHT AND GIVEN AN ADDITIONAL ¼ TURN. THE THREAD OF THE NUT AND BOLT SHALL THEN BE BURRED WITH A SHARP POINTED TOOL.

WHEN WELDING THE SOLE PLATE TO THE GIRDER, USE TEMPERATURE INDICATING WAX PENS, OR OTHER SUITABLE MEANS, TO ENSURE THAT THE TEMPERATURE OF THE BEARING DOES NOT EXCEED 121°C TEMPERATURES ABOVE THIS MAY DAMAGE THE TFE OR ELASTOMER.

ALL SURFACES OF BEARING PLATES SHALL BE SMOOTH AND STRAIGHT.

FOR THERMAL SPRAYED COATINGS (METALLIZATION), SEE SPECIAL PROVISIONS.

THE CONTRACTOR MAY SUBSTITUTE DISC BEARINGS FOR THE POT BEARINGS SHOWN. FOR OPTIONAL DISC BEARINGS, SEE SPECIAL PROVISIONS.

SOLE PLATES SHALL BE WELDED TO THE GIRDER FLANGES BEFORE FALSEWORK IS PLACED.

TABLE FOR LOADS					
BEARING	LOCATION	VERTICAL LOAD (kN)			LATERAL LOAD (kN)
		DEAD	LIVE	TOTAL	
PB1 (FIXED)	BENT 1	1770	620	2390	354

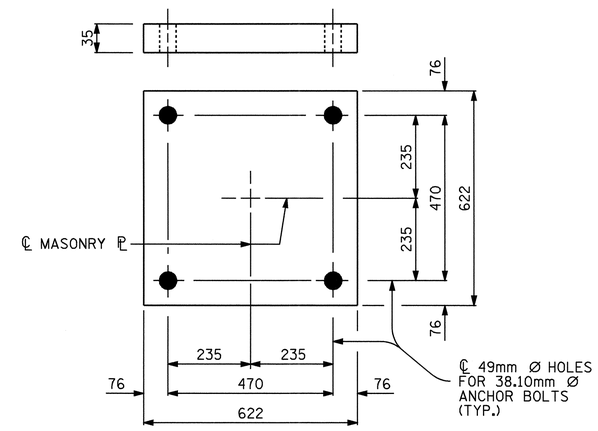

PLAN
M1 (4 REQ'D.)

MASONRY PLATE DETAILS

PROJECT NO. R-0609IA
GUILFORD COUNTY
STATION: 52+93.640 -L-

STATE OF NORTH CAROLINA
DEPARTMENT OF TRANSPORTATION
RALEIGH

SUPERSTRUCTURE

BEARING DETAILS

(NORTHBOUND COLLECTOR)

NORTH CAROLINA PROFESSIONAL SEAL 23926 ENGINEER BRIAN C. HANKS
B. C. Hanks 5/22/06

REVISIONS							SHEET NO.
NO.	BY:	DATE:	NO.	BY:	DATE:		S-213
1			3				TOTAL SHEETS
2			4				321

DRAWN BY : P.C. BREWER/DGE DATE : 9/13/04
CHECKED BY : W.F. PARKER/ABN DATE : 9/24/04

15-MAY-2006 13:39
G:\STRUCT~1\frye\FINAL_~1\Str7\R0609I~4.DGN
dely

STR. #7

DEAD LOAD DEFLECTION TABLE FOR GIRDERS

GIRDER #1

TWENTIETH POINTS	BRG.	.05	.10	.15	.20	.25	.30	.35	.40	.45	.50	.55	.60	.65	.70	.75	.80	.85	.90	.95	BRG.	.05	.10	.15	.20	.25	.30	.35	.40	.45	.50	.55	.60	.65	.70	.75	.80	.85	.90	.95	BRG.
	SPAN "A"																				SPAN "B"																				
DEFLECTION DUE TO WEIGHT OF GIRDER	0.000	0.002	0.003	0.005	0.006	0.007	0.008	0.008	0.008	0.008	0.008	0.007	0.006	0.005	0.004	0.003	0.002	0.001	0.000	0.000	0.000	0.001	0.002	0.003	0.004	0.006	0.008	0.010	0.011	0.012	0.013	0.014	0.014	0.014	0.013	0.012	0.010	0.008	0.005	0.003	0.000
DEFLECTION DUE TO WEIGHT OF SLAB ✳	0.000	0.006	0.012	0.017	0.022	0.025	0.027	0.029	0.029	0.028	0.026	0.024	0.021	0.017	0.013	0.009	0.006	0.003	0.001	0.000	0.000	0.002	0.006	0.011	0.017	0.024	0.029	0.036	0.042	0.046	0.049	0.051	0.051	0.050	0.047	0.042	0.036	0.028	0.020	0.010	0.000
DEFLECTION DUE TO WEIGHT OF RAIL	0.000	0.000	0.001	0.001	0.002	0.002	0.003	0.003	0.003	0.003	0.003	0.002	0.002	0.002	0.001	0.001	0.000	0.000	0.000	0.000	0.000	0.000	0.000	0.001	0.002	0.002	0.003	0.003	0.004	0.005	0.005	0.005	0.005	0.005	0.004	0.004	0.003	0.003	0.002	0.001	0.000
TOTAL DEAD LOAD DEFLECTION	0.000	0.008	0.016	0.023	0.030	0.034	0.038	0.040	0.040	0.039	0.037	0.033	0.029	0.024	0.018	0.013	0.008	0.004	0.001	0.000	0.000	0.003	0.008	0.015	0.023	0.032	0.040	0.049	0.057	0.063	0.067	0.070	0.070	0.069	0.064	0.058	0.049	0.039	0.027	0.014	0.000
REQUIRED CAMBER	0	8	16	23	30	34	38	40	40	39	37	33	29	24	18	13	8	4	1	0	0	3	8	15	23	32	40	49	57	63	67	70	70	69	64	58	49	39	27	14	0

GIRDERS #2 & #3

TWENTIETH POINTS	BRG.	.05	.10	.15	.20	.25	.30	.35	.40	.45	.50	.55	.60	.65	.70	.75	.80	.85	.90	.95	BRG.	.05	.10	.15	.20	.25	.30	.35	.40	.45	.50	.55	.60	.65	.70	.75	.80	.85	.90	.95	BRG.
	SPAN "A"																				SPAN "B"																				
DEFLECTION DUE TO WEIGHT OF GIRDER	0.000	0.002	0.003	0.005	0.006	0.007	0.008	0.008	0.008	0.008	0.008	0.007	0.006	0.005	0.004	0.003	0.002	0.001	0.000	0.000	0.000	0.001	0.002	0.003	0.004	0.006	0.008	0.010	0.011	0.012	0.013	0.014	0.014	0.014	0.013	0.012	0.010	0.008	0.005	0.003	0.000
DEFLECTION DUE TO WEIGHT OF SLAB ✳	0.000	0.006	0.014	0.019	0.024	0.028	0.031	0.033	0.033	0.032	0.029	0.027	0.024	0.019	0.015	0.010	0.006	0.004	0.001	0.000	0.000	0.002	0.006	0.013	0.019	0.027	0.034	0.041	0.047	0.052	0.056	0.058	0.059	0.057	0.053	0.048	0.041	0.032	0.023	0.011	0.000
DEFLECTION DUE TO WEIGHT OF RAIL	0.000	0.001	0.001	0.002	0.002	0.003	0.003	0.003	0.003	0.003	0.003	0.002	0.002	0.002	0.001	0.001	0.001	0.000	0.000	0.000	0.000	0.000	0.001	0.001	0.002	0.002	0.003	0.003	0.004	0.005	0.005	0.005	0.005	0.005	0.005	0.004	0.003	0.003	0.002	0.001	0.000
TOTAL DEAD LOAD DEFLECTION	0.000	0.009	0.018	0.026	0.032	0.038	0.042	0.044	0.044	0.043	0.040	0.036	0.032	0.026	0.020	0.014	0.009	0.005	0.001	0.000	0.000	0.003	0.009	0.017	0.025	0.035	0.045	0.054	0.062	0.069	0.074	0.077	0.078	0.076	0.071	0.064	0.054	0.043	0.030	0.015	0.000
REQUIRED CAMBER	0	9	18	26	32	38	42	44	44	43	40	36	32	26	20	14	9	5	1	0	0	3	9	17	25	35	45	54	62	69	74	77	78	76	71	64	54	43	30	15	0

GIRDER #4

TWENTIETH POINTS	BRG.	.05	.10	.15	.20	.25	.30	.35	.40	.45	.50	.55	.60	.65	.70	.75	.80	.85	.90	.95	BRG.	.05	.10	.15	.20	.25	.30	.35	.40	.45	.50	.55	.60	.65	.70	.75	.80	.85	.90	.95	BRG.
	SPAN "A"																				SPAN "B"																				
DEFLECTION DUE TO WEIGHT OF GIRDER	0.000	0.002	0.003	0.005	0.006	0.007	0.008	0.008	0.008	0.008	0.008	0.007	0.006	0.005	0.004	0.003	0.002	0.001	0.000	0.000	0.000	0.001	0.002	0.003	0.004	0.006	0.008	0.010	0.011	0.012	0.013	0.014	0.014	0.014	0.013	0.012	0.010	0.008	0.005	0.003	0.000
DEFLECTION DUE TO WEIGHT OF SLAB ✳	0.000	0.006	0.012	0.017	0.022	0.025	0.027	0.029	0.029	0.028	0.026	0.024	0.021	0.017	0.013	0.009	0.006	0.003	0.001	0.000	0.000	0.002	0.006	0.011	0.017	0.024	0.029	0.036	0.042	0.046	0.049	0.051	0.051	0.050	0.047	0.042	0.036	0.028	0.020	0.010	0.000
DEFLECTION DUE TO WEIGHT OF RAIL	0.000	0.000	0.001	0.001	0.002	0.002	0.003	0.003	0.003	0.003	0.003	0.002	0.002	0.002	0.001	0.001	0.000	0.000	0.000	0.000	0.000	0.000	0.000	0.001	0.002	0.002	0.003	0.003	0.004	0.005	0.005	0.005	0.005	0.005	0.004	0.004	0.003	0.003	0.002	0.001	0.000
TOTAL DEAD LOAD DEFLECTION	0.000	0.008	0.016	0.023	0.030	0.034	0.038	0.040	0.040	0.039	0.037	0.033	0.029	0.024	0.018	0.013	0.008	0.004	0.001	0.000	0.000	0.003	0.008	0.015	0.023	0.032	0.040	0.049	0.057	0.063	0.067	0.070	0.070	0.069	0.064	0.058	0.049	0.039	0.027	0.014	0.000
REQUIRED CAMBER	0	8	16	23	30	34	38	40	40	39	37	33	29	24	18	13	8	4	1	0	0	3	8	15	23	32	40	49	57	63	67	70	70	69	64	58	49	39	27	14	0

✳ INCLUDES SLAB, BUILDUPS & STAY-IN-PLACE FORMS.
ALL VALUES ARE SHOWN IN METERS, EXCEPT "REQUIRED CAMBER" WHICH IS SHOWN IN MILLIMETERS.

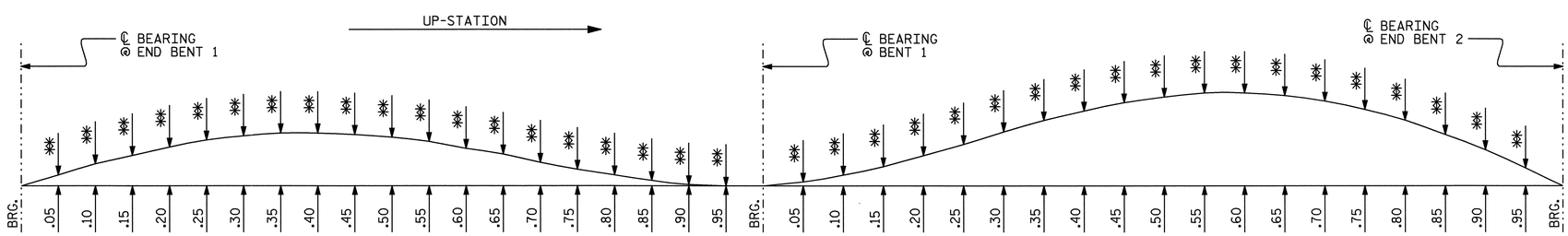

✳✳ FOR CAMBER AT TWENTIETH POINTS, SEE TABLES.

SCHEMATIC CAMBER ORDINATES

PROJECT NO. R-0609IA
GUILFORD COUNTY
STATION: 52+93.640 -L-

STATE OF NORTH CAROLINA
DEPARTMENT OF TRANSPORTATION
RALEIGH

SUPERSTRUCTURE
DEAD LOAD DEFLECTIONS
(NORTHBOUND COLLECTOR)

NORTH CAROLINA PROFESSIONAL SEAL 23926 ENGINEER BRIAN C. HANKS
5/22/06

REVISIONS						SHEET NO.
NO.	BY:	DATE:	NO.	BY:	DATE:	S-214
1			3			TOTAL SHEETS
2			4			321

DRAWN BY : P.C. BREWER/DGE DATE : 9/13/04
CHECKED BY : W.F. PARKER/ABN DATE : 9/24/04

15-MAY-2006 13:38
G:\STRUCT~1\frye\FINAL_~1\Str7\ROBFE2~1.DGN
dely

STR. #7

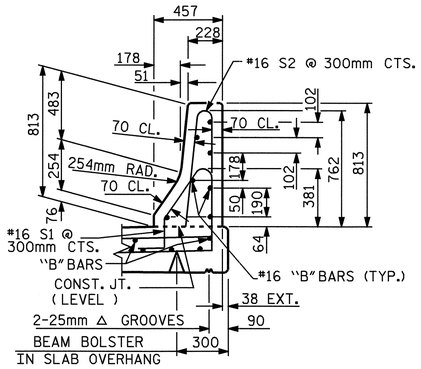

SECTION THRU RAIL

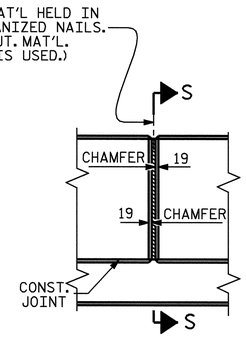

ELEVATION AT EXPANSION JOINTS

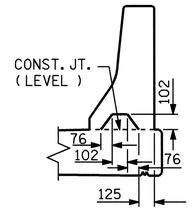

SECTION S-S

AT DAM IN OPEN JOINT
(THIS IS TO BE USED ONLY
WHEN SLIP FORM IS USED)

BARRIER RAIL DETAILS

NOTES

THE BARRIER RAIL IN A CONTINUOUS UNIT SHALL NOT BE CAST UNTIL ALL SLAB CONCRETE IN THE UNIT HAS BEEN CAST AND HAS REACHED A MINIMUM COMPRESSIVE STRENGTH OF 20.7 MPa.

ALL REINFORCING STEEL IN BARRIER RAILS SHALL BE EPOXY COATED.

VERTICAL GROOVED CONTRACTION JOINTS, 12mm IN DEPTH, SHALL BE TOOLED IN ALL EXPOSED FACES OF THE BARRIER RAIL AND IN ACCORDANCE WITH ARTICLE 825-10(B) OF THE STANDARD SPECIFICATIONS. THE CONTRACTION JOINT SHALL BE LOCATED AT EACH THIRD POINT BETWEEN BARRIER RAIL EXPANSION JOINTS. ONLY ONE CONTRACTION JOINT IS REQUIRED AT MIDPOINT OF BARRIER RAIL SEGMENTS LESS THAN 6.1m IN LENGTH AND NO CONTRACTION JOINTS ARE REQUIRED FOR THOSE SEGMENTS LESS THAN 3.5m IN LENGTH.

THE #16 S1 & #16 S2 BARS MAY BE SHIFTED SLIGHTLY AS NECESSARY IN ORDER TO MAINTAIN 50mm CLEARANCE FROM THE 13mm EXPANSION JOINT MATERIAL IN THE BARRIER RAIL.

BAR TYPES

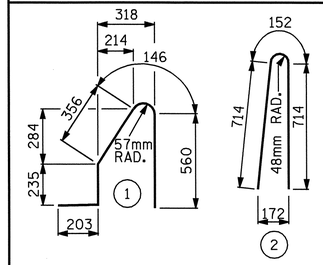

ALL BAR DIMENSIONS ARE OUT TO OUT

BILL OF MATERIAL

BAR	NO.	SIZE	TYPE	LENGTH	WEIGHT
✳ B1	14	#16	STR	3840	83
✳ B2	112	#16	STR	8900	1547
✳ B3	14	#16	STR	7040	153
✳ S1	554	#16	1	1500	1290
✳ S2	554	#16	2	1580	1358

✳ EPOXY COATED REINFORCING STEEL 4,431 kg

CLASS AA CONCRETE 41.7 CU. METER

CONCRETE BARRIER RAIL 166.180m

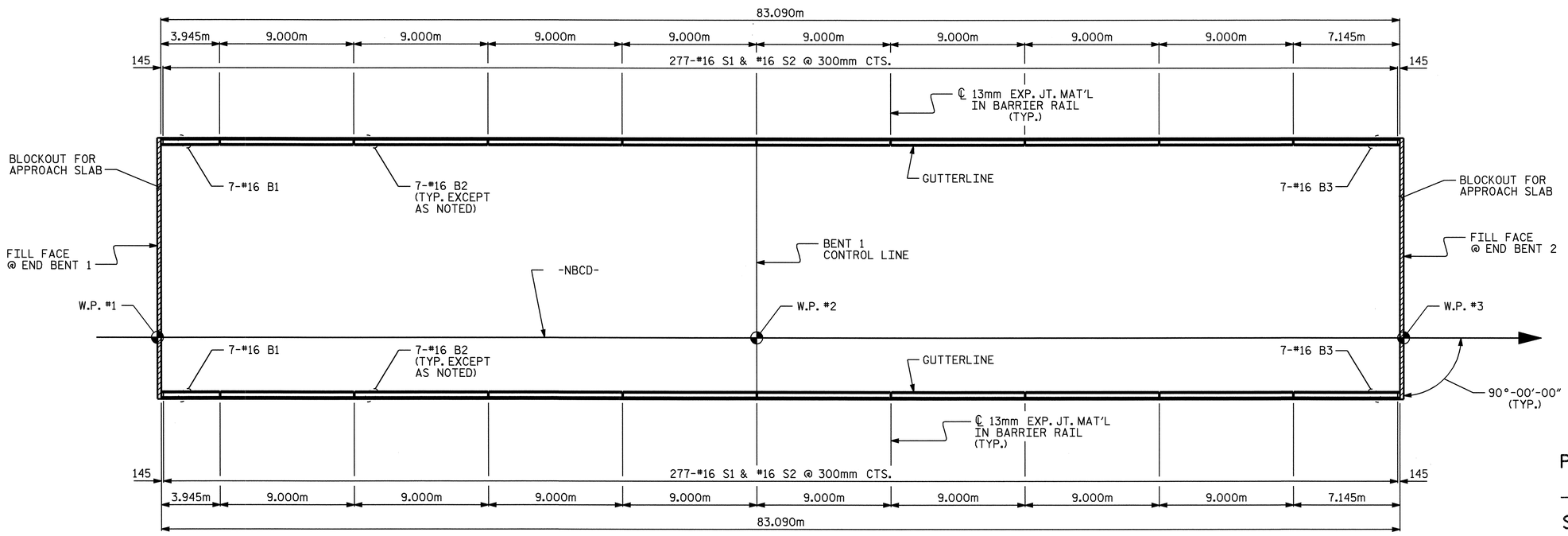

PLAN OF BARRIER RAIL

PROJECT NO. R-0609IA
GUILFORD COUNTY
STATION: 52+93.640 -L-

STATE OF NORTH CAROLINA
DEPARTMENT OF TRANSPORTATION
RALEIGH

SUPERSTRUCTURE
CONCRETE
BARRIER RAIL
(NORTHBOUND COLLECTOR)

NORTH CAROLINA PROFESSIONAL SEAL 23926 ENGINEER BRIAN C. HANKS
5/22/06

REVISIONS						SHEET NO.
NO.	BY:	DATE:	NO.	BY:	DATE:	S-215
1			3			TOTAL SHEETS
2			4			321

ASSEMBLED BY : P.C. BREWER/DGE DATE : 9/13/04
CHECKED BY : W.F. PARKER/ABN DATE : 9/24/04

DRAWN BY : ARB 5/87
CHECKED BY : SJD 9/87

REV. 8/16/99 RWW/LES
REV. 10/17/00 RWW/LES
REV. 5/7/03R RWW/JTE

15-MAY-2006 13:37
G:\STRUCT~1\frye\FINAL_~1\Str7\R0361B~1.DGN
dely

STD. No. CBR1SM

STR. #7

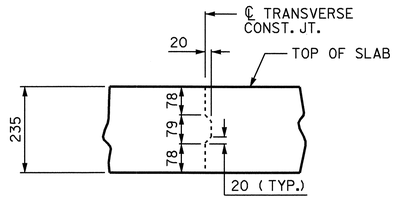

TRANSVERSE CONST. JT. DETAIL

NOTE: REINFORCING STEEL IN SLAB NOT SHOWN. LONGITUDINAL REINFORCING STEEL SHALL BE CONTINUOUS THRU JOINT.

SUPERSTRUCTURE REINFORCING STEEL LENGTHS ARE BASED ON THE FOLLOWING MINIMUM SPLICE LENGTHS

BAR SIZE	SUPERSTRUCTURE EXCEPT APPROACH SLABS, PARAPET, AND BARRIER RAIL		APPROACH SLABS		PARAPET AND BARRIER RAIL
	EPOXY COATED	UNCOATED	EPOXY COATED	UNCOATED	
#13	610	540	610	540	840
#16	770	660	770	660	1050
#19	920	790	1190	790	1330
#22	1580	1060			
#25	2080	1390			

GROOVING BRIDGE FLOORS

APPROACH SLABS	160.0m²
BRIDGE DECK	871.0m²
TOTAL	1,031.0m²

BILL OF MATERIAL

BAR	NO.	SIZE	TYPE	LENGTH	WEIGHT
* A1	554	16	STR	12280	10558
A2	554	16	STR	12280	10558
* B1	78	13	STR	8920	692
* B2	153	22	STR	11060	5148
* B3	104	13	STR	7640	790
* B4	20	13	STR	8860	176
B5	250	16	STR	17140	6650
* D1	102	22	STR	10000	3103
H1	14	22	4	3400	145
H2	14	22	4	4220	180
H3	14	22	4	2960	126
H4	14	22	4	3880	165
K1	24	16	STR	14300	533
K2	8	16	STR	900	11
* S1	72	13	1	3520	252
* S2	72	13	2	2500	179
U1	72	16	3	4500	503
V1	40	16	STR	2140	133
V2	28	16	STR	2160	94
V3	26	16	STR	2180	88
REINFORCING STEEL					19,186 kg
* EPOXY COATED REINFORCING STEEL					20,898 kg

BAR TYPES

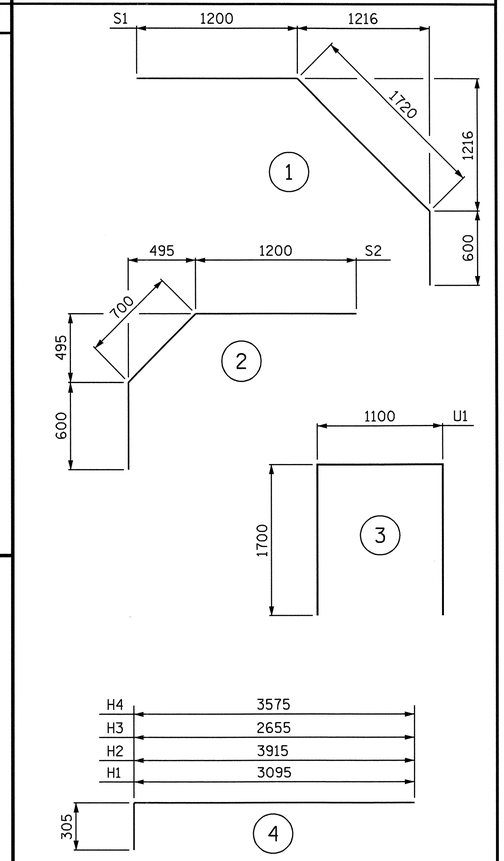

ALL BAR DIMENSIONS ARE OUT TO OUT.

SUPERSTRUCTURE BILL OF MATERIAL

NORTHBOUND COLLECTOR	CLASS AA CONCRETE	REINFORCING STEEL	EPOXY COATED REINFORCING STEEL
	(m3)	(kg)	(kg)
SPANS "A" & "B"		19,186	20,898
POUR #1	79.7		
POUR #2	192.1		
POUR #3	91.0		
TOTALS	362.8	19,186	20,898

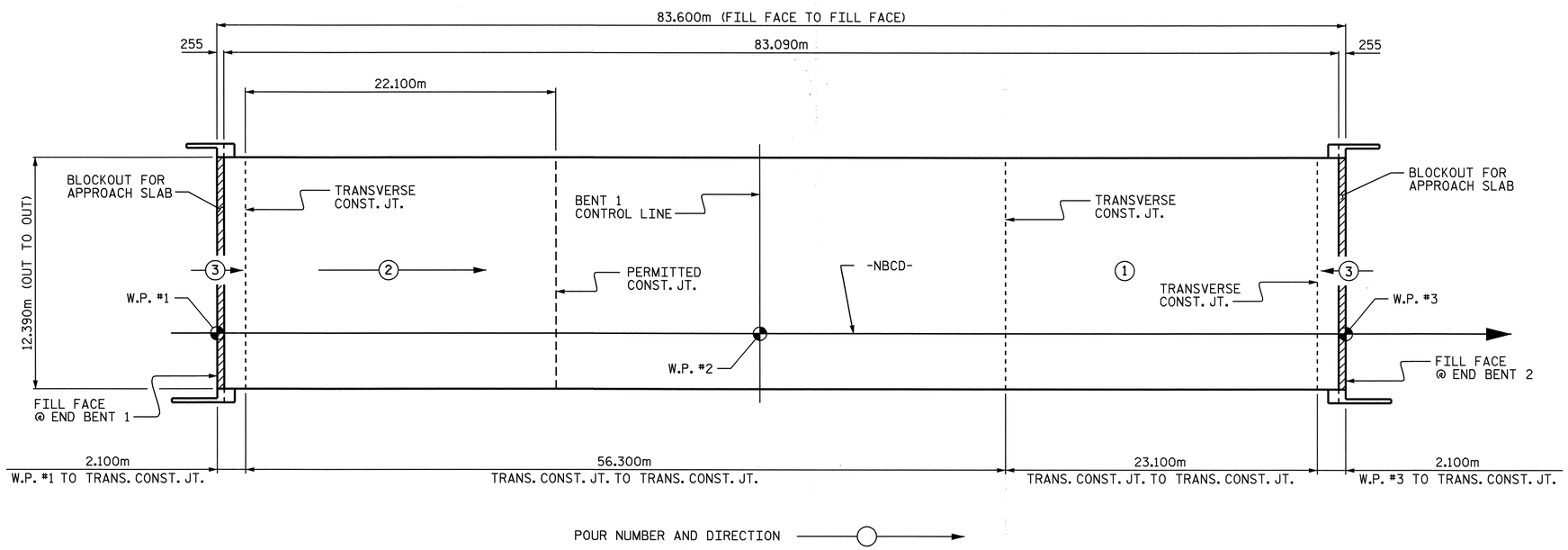

POURING SEQUENCE AND LAYOUT FOR COMPUTING AREA OF REINFORCED CONCRETE DECK SLAB (SQ. METER = 1,035.8)

PROJECT NO. R-0609IA
GUILFORD COUNTY
STATION: 52+93.640 -L-

STATE OF NORTH CAROLINA
DEPARTMENT OF TRANSPORTATION
RALEIGH

SUPERSTRUCTURE
BILL OF MATERIAL
(NORTHBOUND COLLECTOR)

NORTH CAROLINA PROFESSIONAL SEAL 23926 ENGINEER BRIAN C. HANKS
11/9/06

REVISIONS								SHEET NO.
NO.	BY:	DATE:	NO.	BY:	DATE:			S-216
1			3					TOTAL SHEETS
2			4					321

DRAWN BY : P.C. BREWER/DGE DATE : 9/13/04
CHECKED BY : W.F. PARKER/ABN DATE : 9/24/04

09-NOV-2006 13:59
R:\Structures\frye\FINAL_PLANS\Str7\R0609IA_sd_BM_STR.7REV.dgn
bhanks

STR. #7

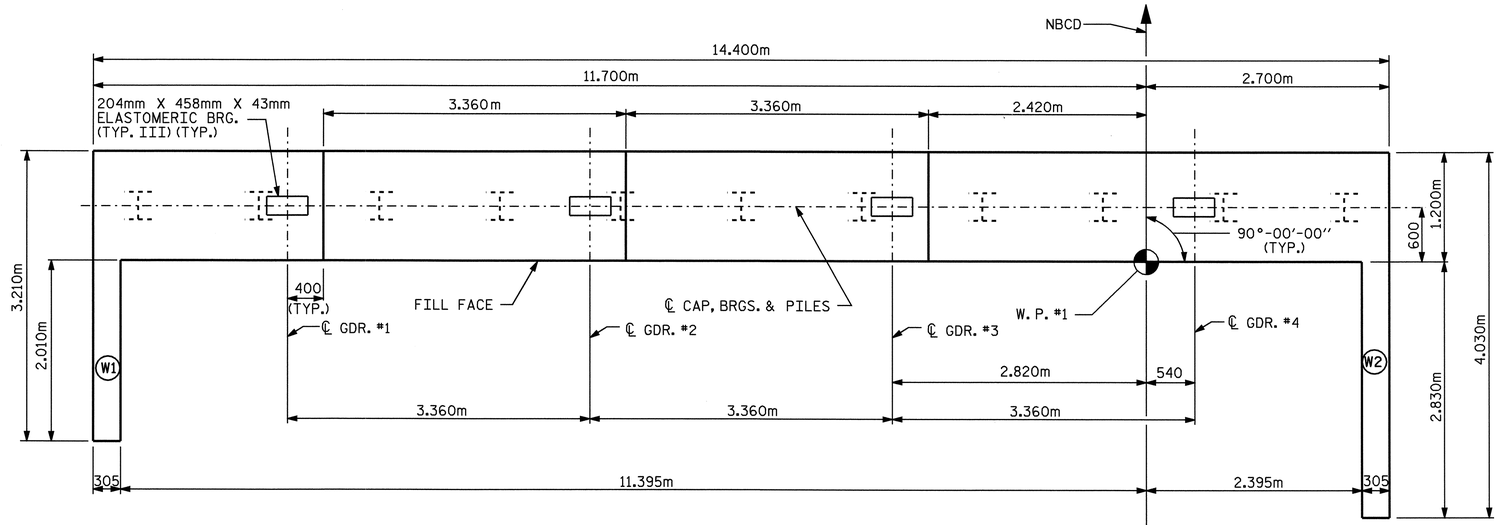

PLAN

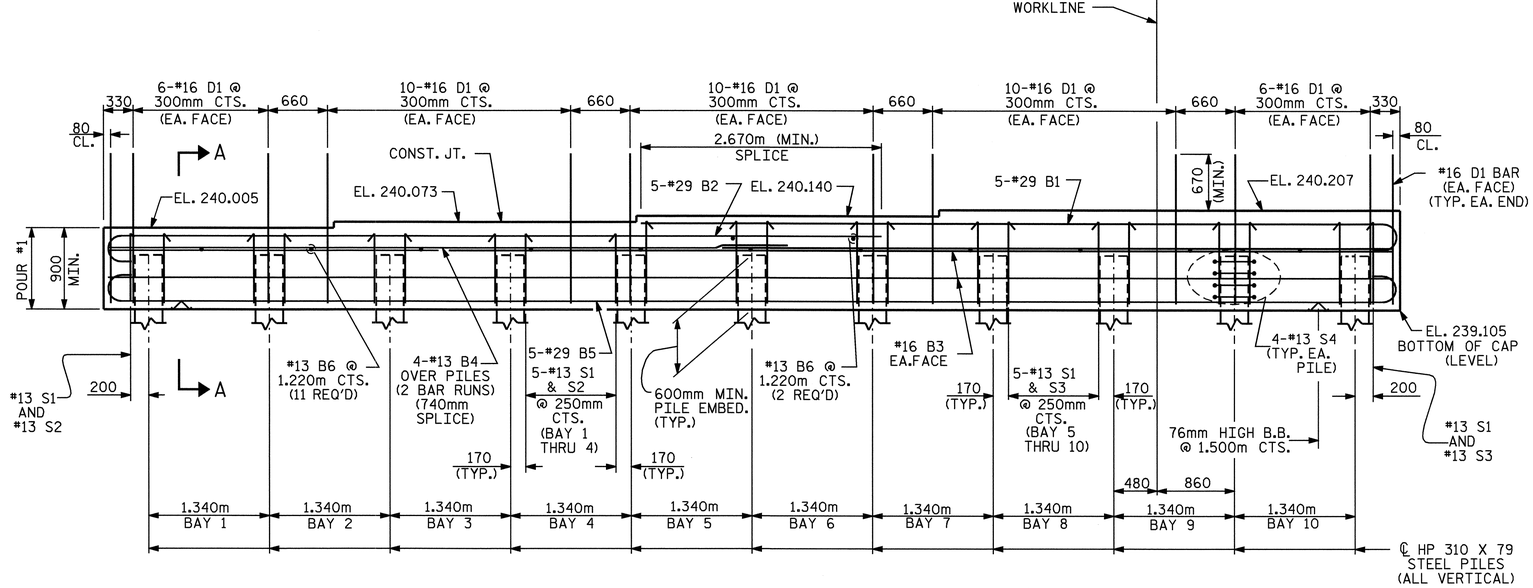

ELEVATION

(WINGS NOT SHOWN FOR CLARITY)
(FOR WING REINFORCING STEEL AND DETAILS, SEE SHEET 2 OF 2)

NOTES:

FOR PILE SPLICE DETAILS, SEE SHEET 2 OF 2.

FOR TEMPORARY DRAINAGE DETAILS, SEE SHEET 2 OF 2.

THE CONTRACTOR SHALL PROVIDE FOR INSTALLATION OF THE 102mm DIAMETER DRAIN PIPE THROUGH THE WING WALL AS REQUIRED FOR REINFORCED BRIDGE APPROACH FILLS, SEE THE ROADWAY PLANS. REINFORCING STEEL IN THE WING WALL MAY BE SHIFTED AS NECESSARY TO CLEAR THE DRAIN PIPE.

THE TOP SURFACE OF THE END BENT CAP AND WINGS, EXCLUDING THE OUTSIDE 4" AND THE BEARING AREA, SHALL BE RAKED TO A DEPTH OF 1/4".

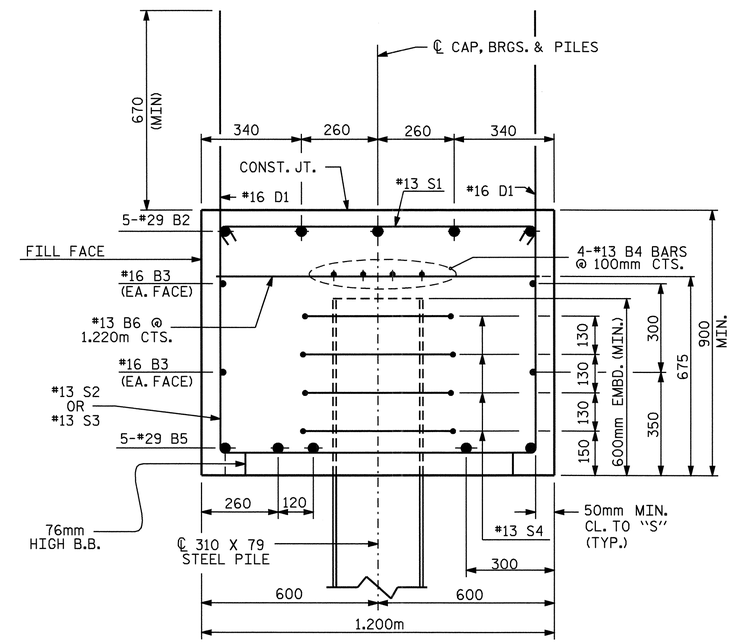

SECTION A-A

PROJECT NO. R-0609IA

GUILFORD COUNTY

STATION: 52+93.640 -L-

SHEET 1 OF 2

STATE OF NORTH CAROLINA
DEPARTMENT OF TRANSPORTATION
RALEIGH

SUBSTRUCTURE
END BENT 1

NORTH CAROLINA PROFESSIONAL SEAL 23926 ENGINEER BRIAN C. HAWKS
5/22/06

REVISIONS								SHEET NO.
NO.	BY:	DATE:	NO.	BY:	DATE:			S-217
1			3					TOTAL SHEETS
2			4					321

STR. #7

DRAWN BY : QT NGUYEN DATE : 02-05
CHECKED BY : RW WRIGHT DATE : 3-05

15-MAY-2006 13:36
G:\STRUCT~1\frye\FINAL_~1\Str7\ROB430~1.DGN
dely

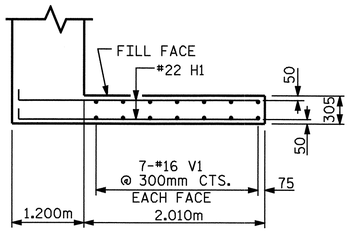

PLAN OF WING W1

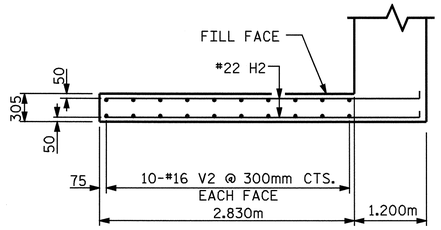

PLAN OF WING W2

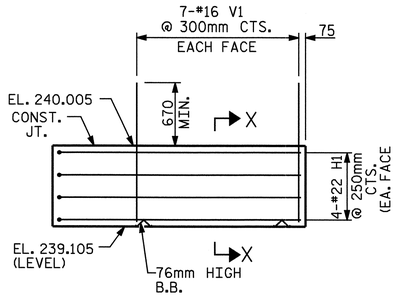

ELEVATION OF WING W1

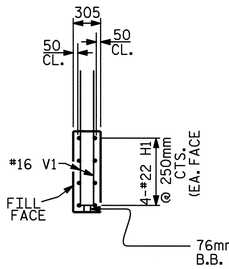

SECTION X-X

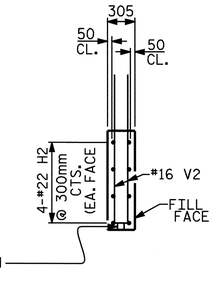

SECTION Y-Y

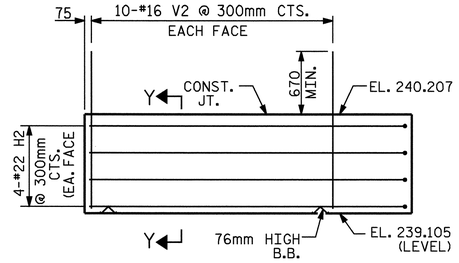

ELEVATION OF WING W2

BAR TYPES

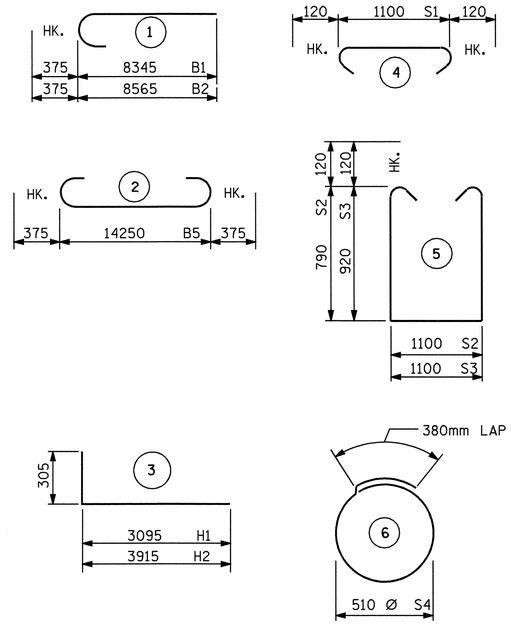

ALL BAR DIMENSIONS ARE OUT TO OUT.

BILL OF MATERIAL
END BENT 1

BAR	NO.	SIZE	TYPE	LENGTH	WEIGHT
B1	5	#29	1	8720	221
B2	5	#29	1	8940	226
B3	4	#16	STR	14300	89
B4	8	#13	STR	7520	60
B5	5	#29	2	15000	379
B6	13	#13	STR	1100	14
D1	88	#16	STR	1700	232
H1	8	#22	3	3400	83
H2	8	#22	3	4220	103
S1	52	#13	4	1340	69
S2	21	#13	5	2920	61
S3	31	#13	5	3180	98
S4	44	#13	6	1980	86
V1	14	#16	STR	1500	33
V2	20	#16	STR	1700	53

REINFORCING STEEL = 1808 KG

CLASS A CONCRETE BREAKDOWN

CAP & LOWER WINGS 19.1 M3

TOTAL CONCRETE 19.1 M3

HP 310 X 79 STEEL PILES
NO. 11 66 METERS

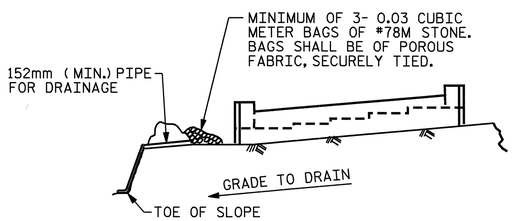

BAGGED STONE AND PIPE SHALL BE PLACED IMMEDIATELY AFTER COMPLETION OF END BENT EXCAVATION. PIPE MAY BE EITHER CONCRETE, CORRUGATED STEEL, CORRUGATED ALUMINUM ALLOY, OR CORRUGATED PLASTIC. PERFORATED PIPE WILL NOT BE ALLOWED.

BAGGED STONE SHALL REMAIN IN PLACE UNTIL THE ENGINEER DIRECTS THAT IT BE REMOVED. THE CONTRACTOR SHALL REMOVE AND DISPOSE OF SILT ACCUMULATIONS AT BAGGED STONE WHEN SO DIRECTED BY THE ENGINEER. BAGS SHALL BE REMOVED AND REPLACED WHENEVER THE ENGINEER DETERMINES THAT THEY HAVE DETERIORATED AND LOST THEIR EFFECTIVENESS.

NO SEPARATE PAYMENT WILL BE MADE FOR THIS WORK AND THE ENTIRE COST OF THIS WORK SHALL BE INCLUDED IN THE UNIT CONTRACT PRICE BID FOR THE SEVERAL PAY ITEMS.

TEMPORARY DRAINAGE AT END BENT

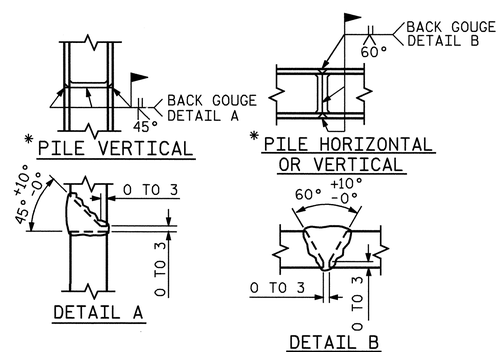

* POSITION OF PILE DURING WELDING.

PILE SPLICE DETAILS

PROJECT NO. R-0609IA
GUILFORD COUNTY
STATION: 52+93.640 -L-

SHEET 2 OF 2

STATE OF NORTH CAROLINA
DEPARTMENT OF TRANSPORTATION
RALEIGH

SUBSTRUCTURE
END BENT 1

NORTH CAROLINA PROFESSIONAL SEAL 23926 ENGINEER BRIAN C. HANKS
5/22/06

REVISIONS							SHEET NO.
NO.	BY:	DATE:	NO.	BY:	DATE:		S-218
1			3				TOTAL SHEETS
2			4				321

STR. #7

DRAWN BY : QT NGUYEN DATE : 02-05
CHECKED BY : RW WRIGHT DATE : 3-05

15-MAY-2006 13:35
G:\STRUCT~1\frye\FINAL_~1\Str7\ROB430~1.DGN
dely

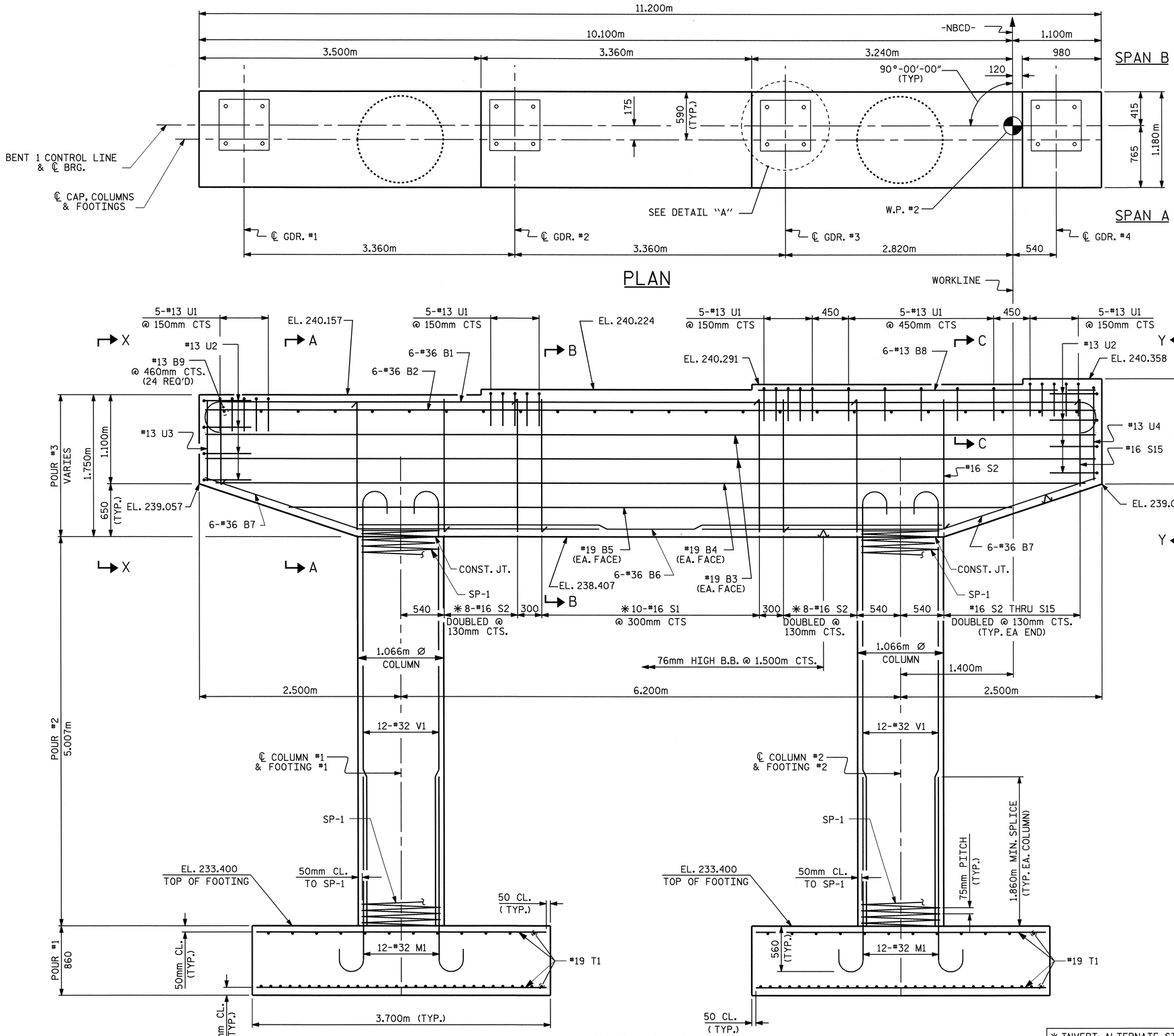

NOTES

STIRRUPS IN CAP MAY BE SHIFTED AS NECESSARY TO CLEAR ANCHOR BOLTS.

HOOKS ON "V1" BARS MAY BE TURNED AS NECESSARY FOR PLACING REINFORCING STEEL.

THE CONTRACTOR'S ATTENTION IS CALLED TO THE FACT THAT THE "M1" IS DETAILED WITH ONE METER OF EXTRA LENGTH.

THE CONTRACTOR'S ATTENTION IS CALLED TO THE FACT THAT THE CENTERLINE OF CAP, COLUMN & FOOTINGS IS OFFSET FROM THE CONTROL LINE OF BENT.

✱ INVERT ALTERNATE STIRRUPS

NORTH CAROLINA PROFESSIONAL SEAL 23926 ENGINEER BRIAN C. HANKS
5/22/06

PROJECT NO. R-0609IA
GUILFORD COUNTY
STATION: 52+93.640 -L-

SHEET 1 OF 2

STATE OF NORTH CAROLINA
DEPARTMENT OF TRANSPORTATION
RALEIGH

SUBSTRUCTURE
BENT 1

REVISIONS								SHEET NO.
NO.	BY:	DATE:	NO.	BY:	DATE:			S-219
1			3					TOTAL SHEETS
2			4					321

DRAWN BY : J.L. WALTON DATE : 1/19/05
CHECKED BY : R. W. WRIGHT DATE : 3/05

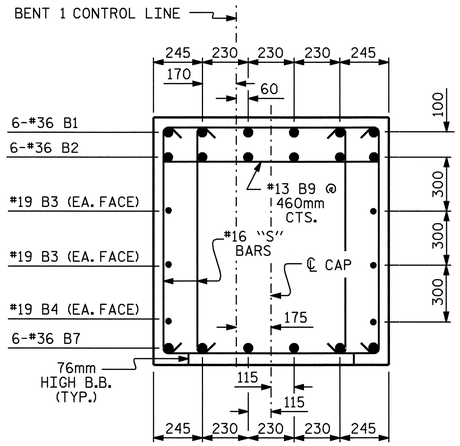

SECTION A-A

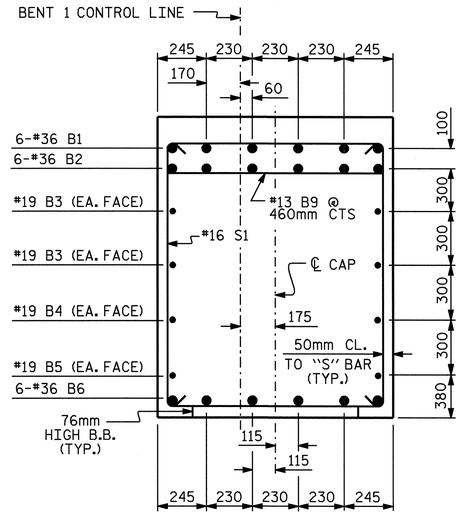

SECTION B-B

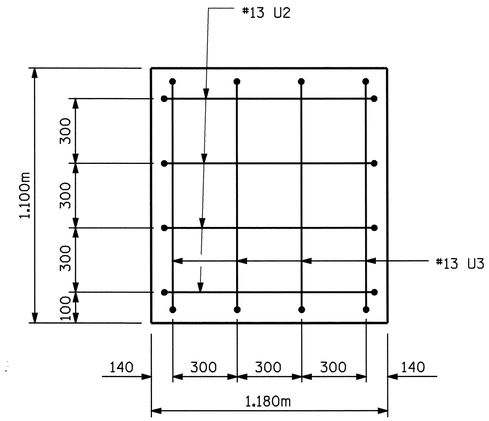

VIEW X-X

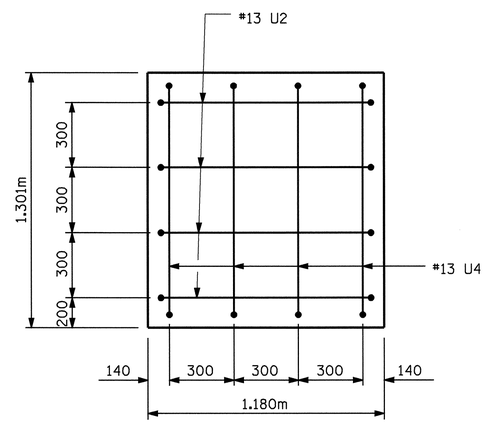

VIEW Y-Y

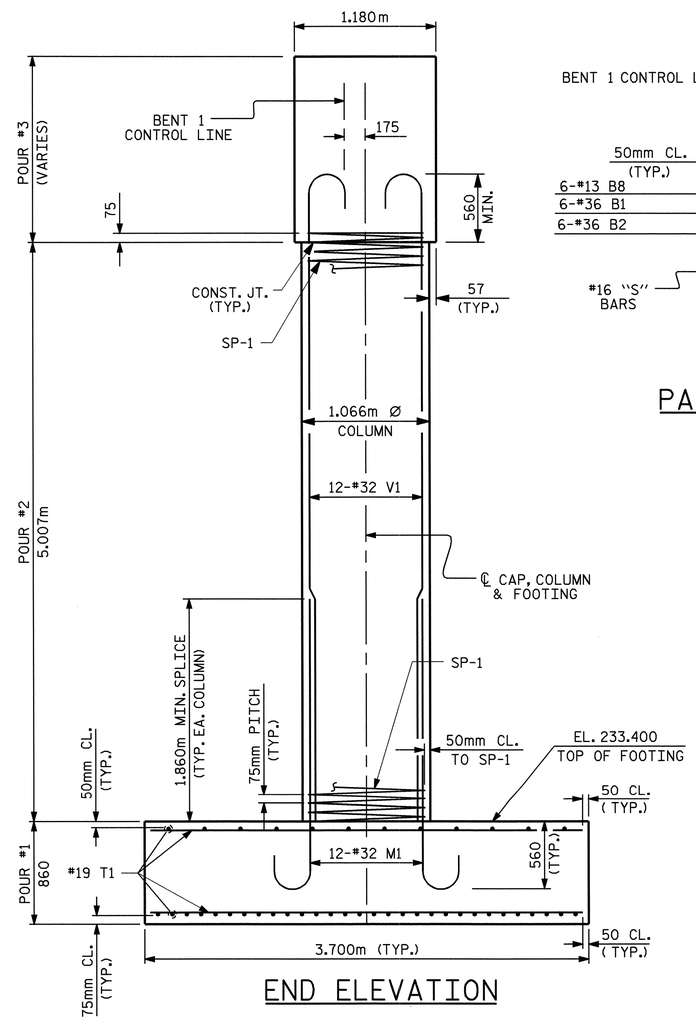

END ELEVATION

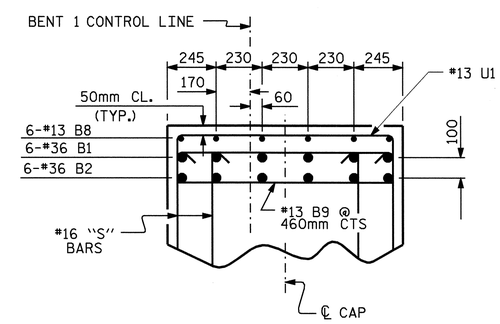

PART SECTION C-C

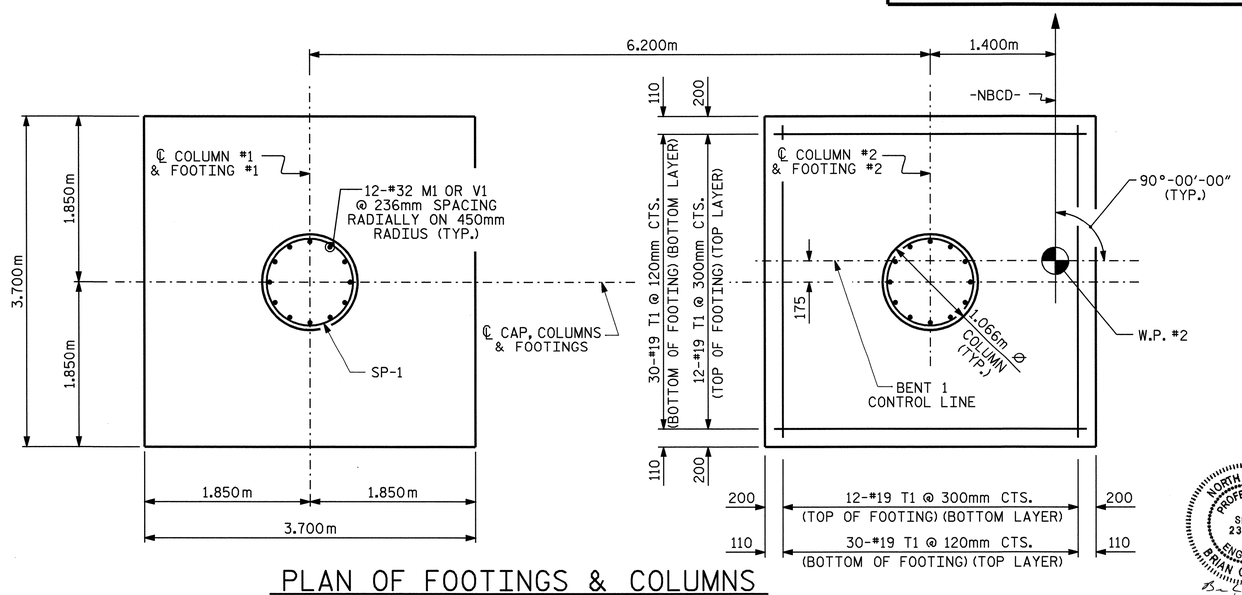

PLAN OF FOOTINGS & COLUMNS

DIMENSIONS AND REINFORCING ARE TYPICAL EACH COLUMN AND FOOTING

BAR TYPES

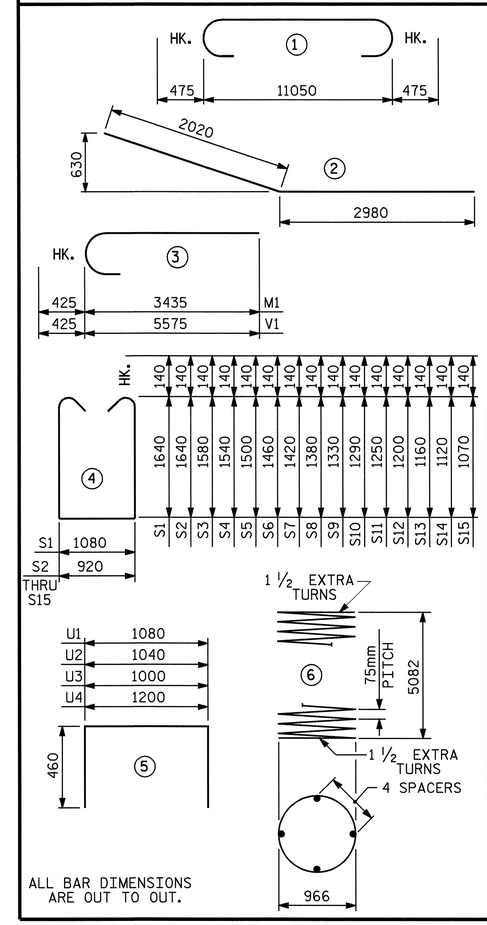

ALL BAR DIMENSIONS ARE OUT TO OUT.

BILL OF MATERIAL BENT 1

BAR	NO.	SIZE	TYPE	LENGTH	WEIGHT
B1	6	#36	1	12000	569
B2	6	#36	STR	11100	527
B3	4	#19	STR	11100	99
B4	2	#19	STR	10880	49
B5	2	#19	STR	9080	41
B6	6	#36	STR	7260	344
B7	12	#36	2	5000	474
B8	6	#13	STR	4240	25
B9	24	#13	STR	1080	26
M1	24	#32	3	3860	593
S1	10	#16	4	4640	72
S2	36	#16	4	4480	250
S3	4	#16	4	4360	27
S4	4	#16	4	4280	27
S5	4	#16	4	4200	26
S6	4	#16	4	4120	26
S7	4	#16	4	4040	25
S8	4	#16	4	3960	25
S9	4	#16	4	3860	24
S10	4	#16	4	3780	23
S11	4	#16	4	3700	23
S12	4	#16	4	3600	22
S13	4	#16	4	3520	22
S14	4	#16	4	3440	21
S15	4	#16	4	3340	21
T1	168	#19	STR	3600	1352
V1	24	#32	3	6000	922
U1	25	#13	5	2000	50
U2	8	#13	5	1960	16
U3	4	#13	5	1920	8
U4	4	#13	5	2120	8
REINFORCING STEEL				KG.	5737
SP-1	2	✻✻	6	212720	423
SPIRAL COLUMN REINFORCING STEEL				KG.	423

CLASS "A" CONCRETE		
POUR #1 (FOOTING)	M3	23.5
POUR #2 (COLUMN)	M3	8.9
POUR #3 (CAP)	M3	22.6
TOTAL CONCRETE	M3	55.0

✻✻ THE SP-1 SPIRAL REINFORCING STEEL SHALL BE W-20 OR D-20 COLD DRAWN WIRE OR #13 PLAIN OR DEFORMED BAR.

FOUNDATION EXCAVATION — LUMP SUM

PROJECT NO. R-0609IA
GUILFORD COUNTY
STATION: 52+93.640 -L-

SHEET 2 OF 2

STATE OF NORTH CAROLINA
DEPARTMENT OF TRANSPORTATION
RALEIGH

SUBSTRUCTURE
BENT 1

NORTH CAROLINA PROFESSIONAL SEAL 23926 ENGINEER BRIAN C. HAWKINS
5/22/06

REVISIONS								SHEET NO.
NO.	BY:	DATE:	NO.	BY:	DATE:			S-220
1			3					TOTAL SHEETS
2			4					321

DRAWN BY : J.L. WALTON DATE : 1/19/05
CHECKED BY : R. W. WRIGHT DATE : 3/05

15-MAY-2006 13:34
G:\STRUCT~1\frye\FINAL_~1\Str7\R0609I~3.DGN
dely

STR. #7

NOTES:

FOR PILE SPLICE DETAILS, SEE SHEET 2 OF 2.

FOR TEMPORARY DRAINAGE DETAILS, SEE SHEET 2 OF 2.

THE CONTRACTOR SHALL PROVIDE FOR INSTALLATION OF THE 102mm DIAMETER DRAIN PIPE THROUGH THE WING WALL AS REQUIRED FOR REINFORCED BRIDGE APPROACH FILLS, SEE THE ROADWAY PLANS. REINFORCING STEEL IN THE WING WALL MAY BE SHIFTED AS NECESSARY TO CLEAR THE DRAIN PIPE.

THE TOP SURFACE OF THE END BENT CAP AND WINGS, EXCLUDING THE OUTSIDE 4" AND THE BEARING AREA, SHALL BE RAKED TO A DEPTH OF 1/4".

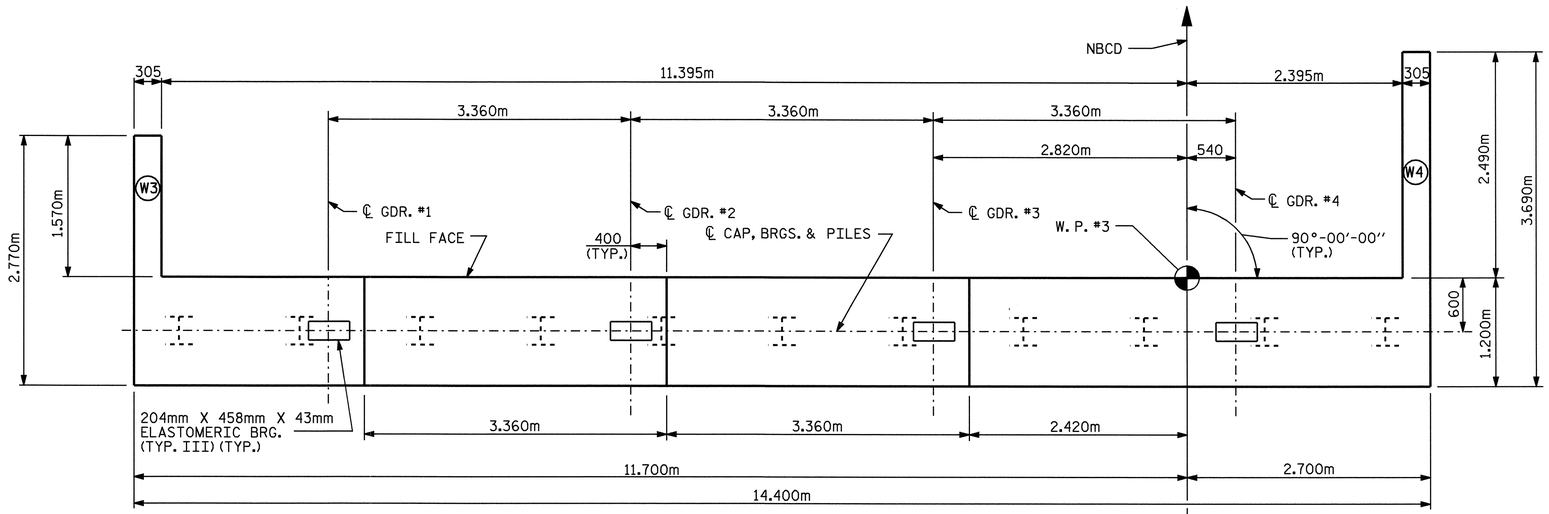

PLAN

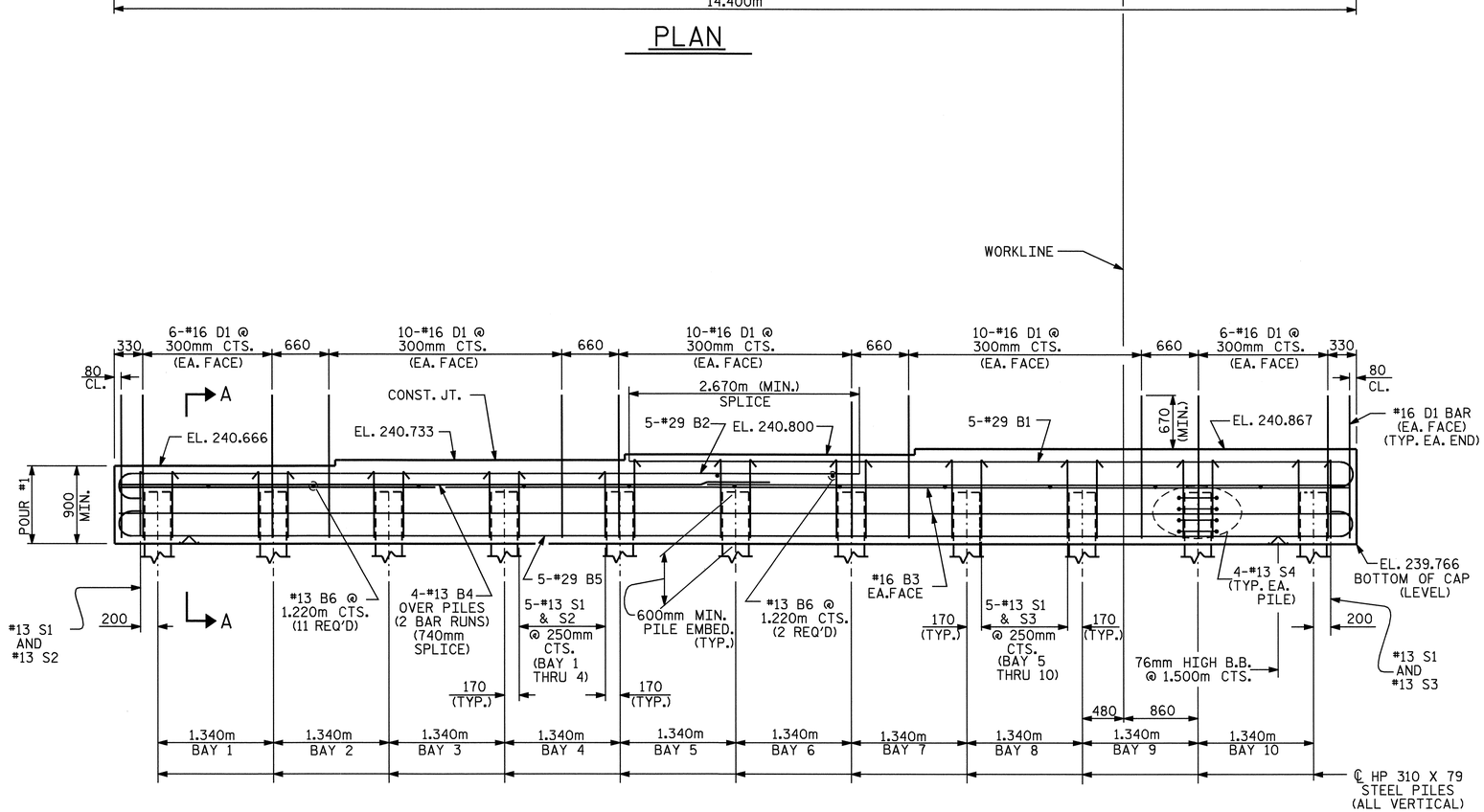

ELEVATION

(WINGS NOT SHOWN FOR CLARITY)
(FOR WING REINFORCING STEEL AND DETAILS, SEE SHEET 2 OF 2)

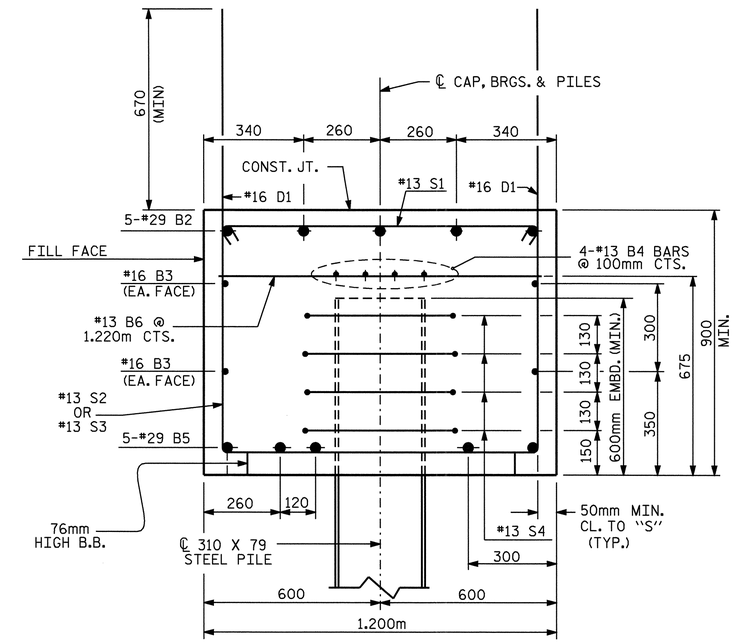

SECTION A-A

PROJECT NO. R-0609IA

GUILFORD COUNTY

STATION: 52+93.640 -L-

SHEET 1 OF 2

STATE OF NORTH CAROLINA
DEPARTMENT OF TRANSPORTATION
RALEIGH

SUBSTRUCTURE
END BENT 2

NORTH CAROLINA PROFESSIONAL SEAL 23926 ENGINEER BRIAN C. HAWKINS
5/22/06

REVISIONS						SHEET NO.
NO.	BY:	DATE:	NO.	BY:	DATE:	S-221
1			3			TOTAL SHEETS
2			4			321

DRAWN BY : QT NGUYEN DATE : 02-05
CHECKED BY : RW WRIGHT DATE : 3-05

15-MAY-2006 13:34
G:\STRUCT~1\frye\FINAL_~1\Str7\ROB430~1.DGN
dely

STR. #7

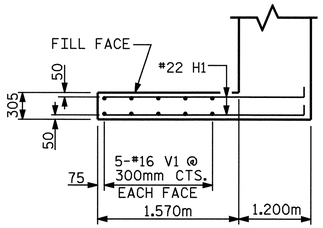

PLAN OF WING W3

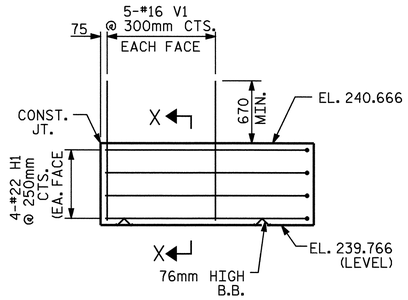

ELEVATION OF WING W3

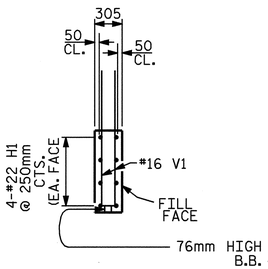

SECTION X-X

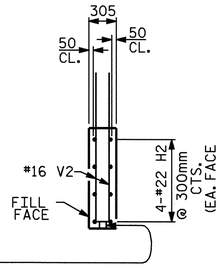

SECTION Y-Y

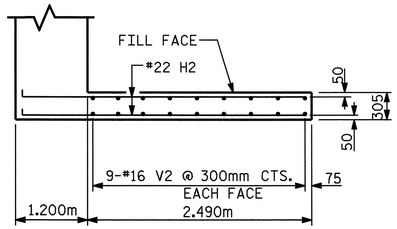

PLAN OF WING W4

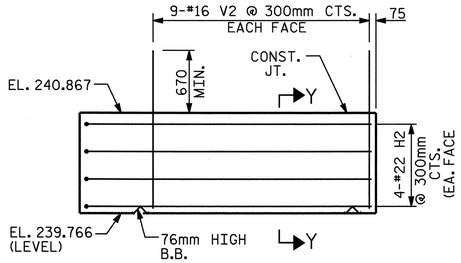

ELEVATION OF WING W4

BAR TYPES

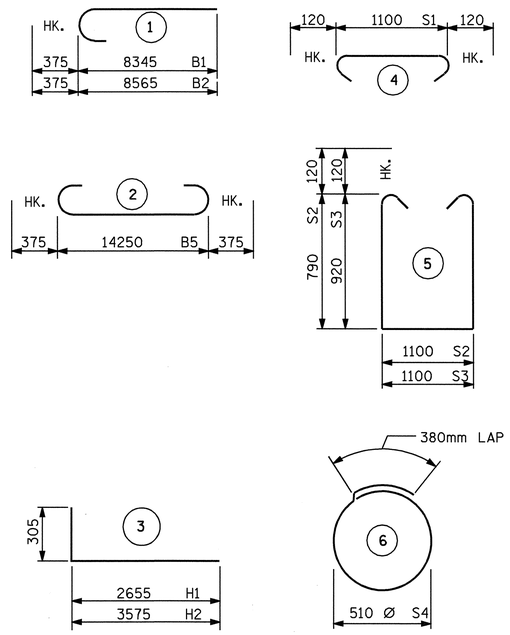

ALL BAR DIMENSIONS ARE OUT TO OUT.

BILL OF MATERIAL
END BENT 2

BAR	NO.	SIZE	TYPE	LENGTH	WEIGHT
B1	5	#29	1	8720	221
B2	5	#29	1	8940	226
B3	4	#16	STR	14300	89
B4	8	#13	STR	7520	60
B5	5	#29	2	15000	379
B6	13	#13	STR	1100	14
D1	88	#16	STR	1700	232
H1	8	#22	3	2960	72
H2	8	#22	3	3880	94
S1	52	#13	4	1340	69
S2	21	#13	5	2920	61
S3	31	#13	5	3180	98
S4	44	#13	6	1980	87
V1	10	#16	STR	1500	23
V2	18	#16	STR	1700	47

REINFORCING STEEL = 1772 KG

CLASS A CONCRETE BREAKDOWN
CAP & LOWER WINGS 18.9 M3

TOTAL CONCRETE 18.9 M3

PILE EXCAVATION NOT IN SOIL
50.3 METERS

HP 310 X 79 STEEL PILES
NO. 11 50.3 METERS

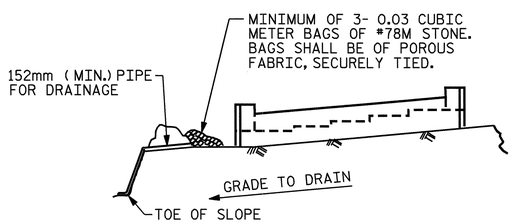

BAGGED STONE AND PIPE SHALL BE PLACED IMMEDIATELY AFTER COMPLETION OF END BENT EXCAVATION. PIPE MAY BE EITHER CONCRETE, CORRUGATED STEEL, CORRUGATED ALUMINUM ALLOY, OR CORRUGATED PLASTIC. PERFORATED PIPE WILL NOT BE ALLOWED.

BAGGED STONE SHALL REMAIN IN PLACE UNTIL THE ENGINEER DIRECTS THAT IT BE REMOVED. THE CONTRACTOR SHALL REMOVE AND DISPOSE OF SILT ACCUMULATIONS AT BAGGED STONE WHEN SO DIRECTED BY THE ENGINEER. BAGS SHALL BE REMOVED AND REPLACED WHENEVER THE ENGINEER DETERMINES THAT THEY HAVE DETERIORATED AND LOST THEIR EFFECTIVENESS.

NO SEPARATE PAYMENT WILL BE MADE FOR THIS WORK AND THE ENTIRE COST OF THIS WORK SHALL BE INCLUDED IN THE UNIT CONTRACT PRICE BID FOR THE SEVERAL PAY ITEMS.

TEMPORARY DRAINAGE AT END BENT

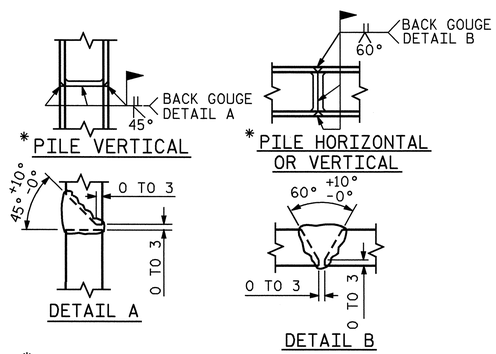

*POSITION OF PILE DURING WELDING.

PILE SPLICE DETAILS

PROJECT NO. R-0609IA
GUILFORD COUNTY
STATION: 52+93.640 -L-

SHEET 2 OF 2

STATE OF NORTH CAROLINA
DEPARTMENT OF TRANSPORTATION
RALEIGH

SUBSTRUCTURE
END BENT 2

NORTH CAROLINA PROFESSIONAL SEAL 23926 ENGINEER BRIAN C. HAWKINS
5/22/06

REVISIONS						SHEET NO.
NO.	BY:	DATE:	NO.	BY:	DATE:	S-222
1			3			TOTAL SHEETS
2			4			321

STR. #7

DRAWN BY : QT NGUYEN DATE : 02-05
CHECKED BY : RW WRIGHT DATE : 3-05

15-MAY-2006 13:33
G:\STRUCT~1\frye\FINAL_~1\Str7\ROB430~1.DGN
dely

NOTES

SLOPE PROTECTION SHALL BE PLACED UNDER THE ENDS OF THE BRIDGE AS SHOWN IN THE DETAILS. METHOD OF MEASUREMENT AND BASIS OF PAYMENT SHALL BE AS PRESCRIBED IN SECTION 462 OF THE STANDARD SPECIFICATIONS. FOR BERM WIDTH, SEE GENERAL DRAWING.

SLOPE PROTECTION SHALL CONSIST OF 100mm POURED-IN-PLACE CONCRETE PAVING AS SHOWN IN THE DETAILS ON THIS SHEET. CONCRETE SHALL BE CLASS "B". THE CONCRETE SURFACE SHALL BE FLOATED WITH A WOODEN FLOAT AND FINISHED. WELDED WIRE FABRIC REINFORCING SHALL BE 152 X 152 - W9.1 X W9.1, 1520mm WIDE. SLOPE PROTECTION SHALL BE POURED IN 1520mm STRIPS AS SHOWN IN THE "POURING DETAIL" WITH 600mm LONG #13 BARS PLACED ALONG THE SLOPE BETWEEN STRIPS AT 450mm MAXIMUM SPACING. SLOPE PROTECTION MAY BE POURED IN ALTERNATE 1220mm AND 1520mm STRIPS AS SHOWN IN THE "OPTIONAL POURING DETAIL" WITH ADJACENT RUNS OF WELDED WIRE FABRIC LAPPING AT LEAST 152mm. THE COST OF THE WELDED WIRE FABRIC AND #13 BARS, IF USED, SHALL BE INCLUDED IN THE CONTRACT UNIT PRICE BID PER SQUARE METER FOR SLOPE PROTECTION.

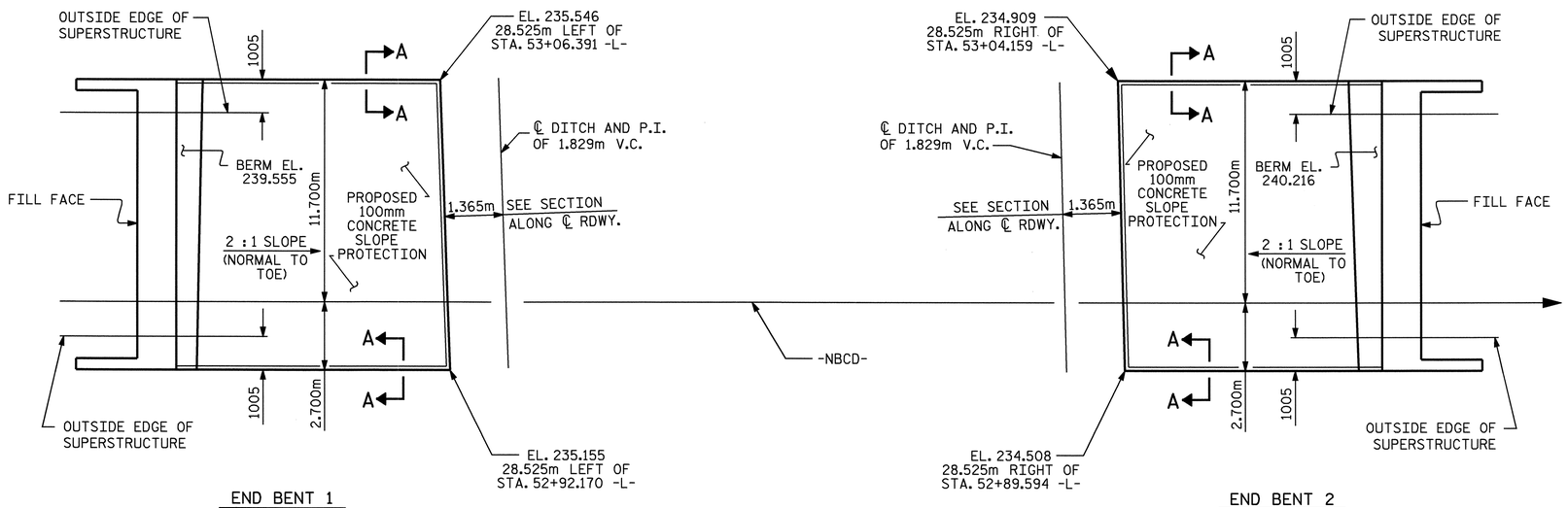

END BENT 1

END BENT 2

PLAN OF SLOPE PROTECTION

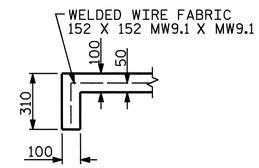

SECTION A-A

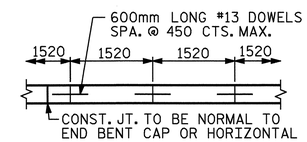

STRIP WIDTHS MAY VARY IN CURVED PORTION.

POURING DETAIL

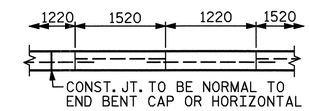

POUR A 1220mm STRIP FIRST. STRIP WIDTHS MAY VARY IN CURVED PORTION.

OPTIONAL POURING DETAIL

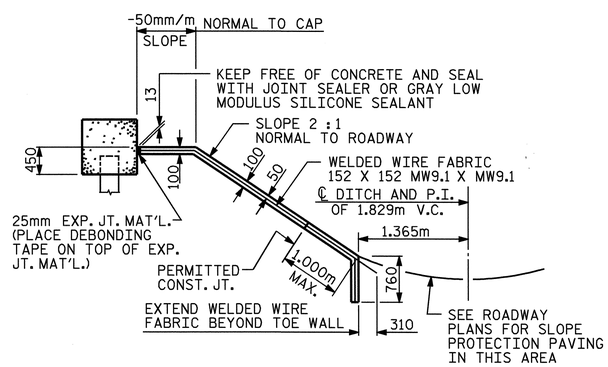

SECTION ALONG ℄ ROADWAY WHEN FILL CATCHES IN DITCH

BRIDGE @ STA. 52+93.640 -L-	100mm SLOPE PROTECTION	* WELDED WIRE FABRIC 1520mm WIDE
	SQUARE METERS	APPROX. METERS
END BENT 1	175	150
END BENT 2	230	190

* QUANTITY SHOWN IS BASED ON 1520mm POURS.

PROJECT NO. R-0609IA
GUILFORD COUNTY
STATION: 52+93.640 -L-

STATE OF NORTH CAROLINA
DEPARTMENT OF TRANSPORTATION
RALEIGH

STANDARD
SLOPE PROTECTION
DETAILS

NORTH CAROLINA PROFESSIONAL SEAL 23926 ENGINEER BRIAN C. HAWKS
3/22/06

REVISIONS							SHEET NO.
NO.	BY:	DATE:	NO.	BY:	DATE:		S-223
1			3				TOTAL SHEETS
2			4				321

ASSEMBLED BY : J.L. WALTON		DATE : 10/7/04	
CHECKED BY : D.G. ELY		DATE : 11/15/04	
DRAWN BY : ELR 5/92	REV. 10/17/00	RWW/LES	
CHECKED BY : GRP 6/92	REV. 7/10/01	LES/RDR	
	REV. 5/7/03	RWW/JTE	

15-MAY-2006 13:32
G:\STRUCT~1\frye\FINAL_~1\Str7\R012ED~1.DGN
dely

STR #7

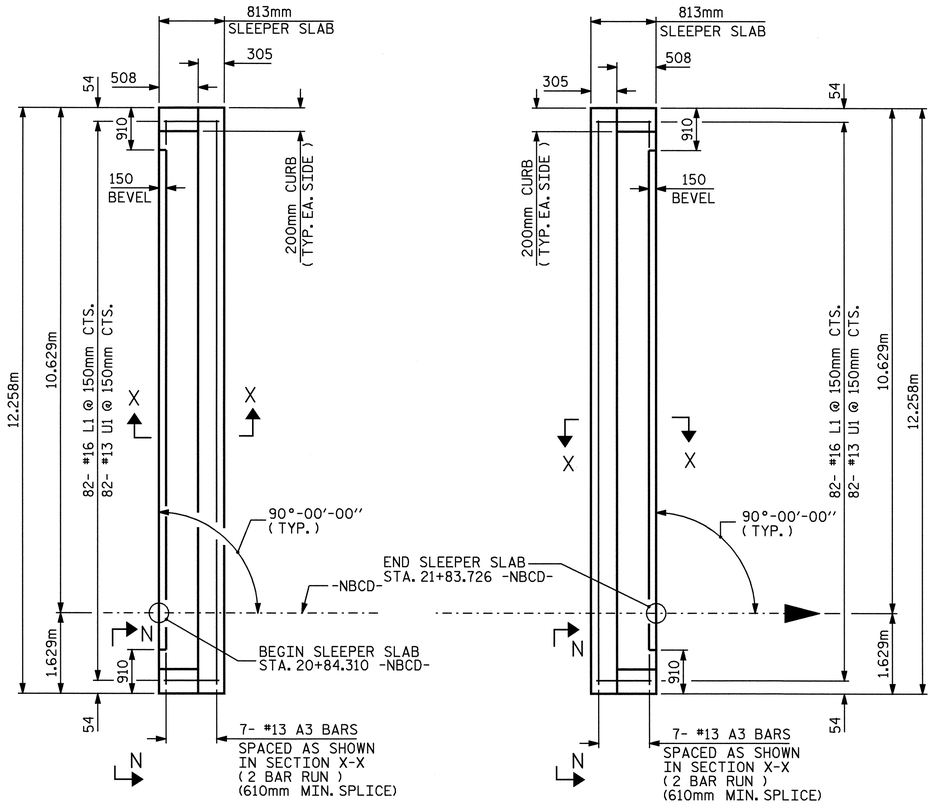

PLAN OF SLEEPER SLAB

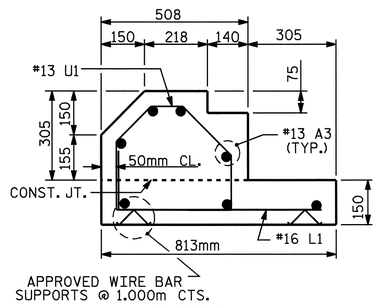

SECTION X-X

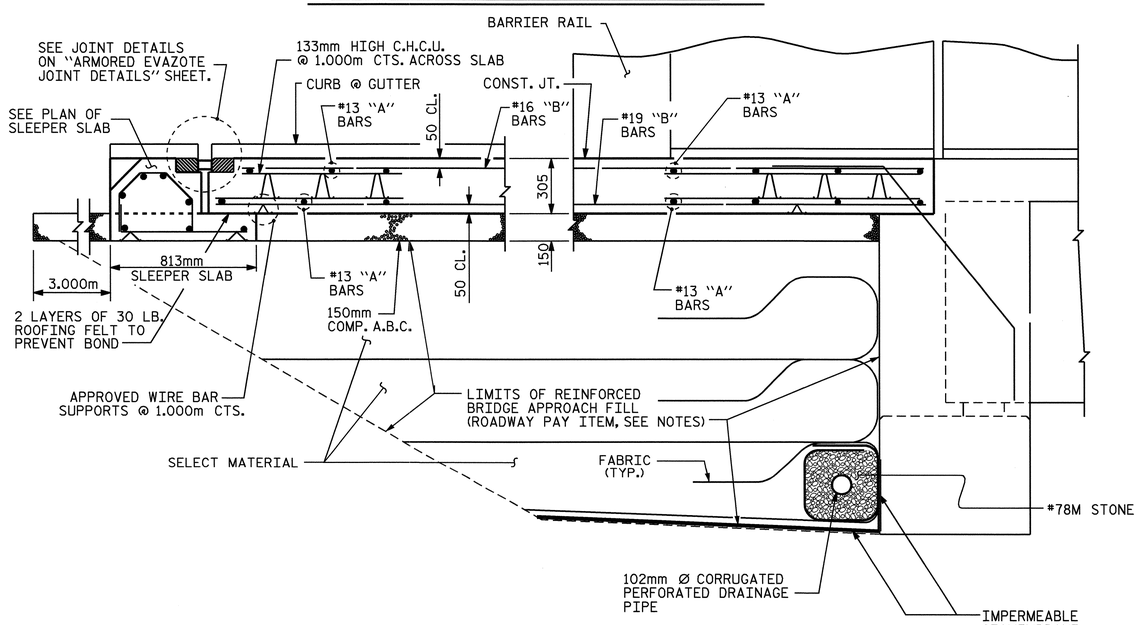

SECTION THRU SLAB

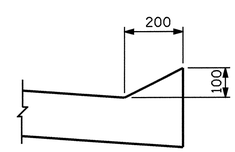

VIEW N-N

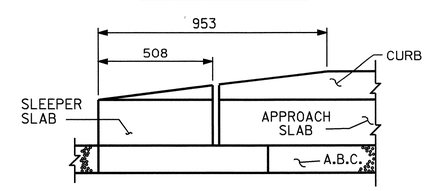

END OF CURB WITHOUT
SHOULDER BERM GUTTER

CURB DETAILS

NOTES

APPROACH SLAB SHALL NOT BE CONSTRUCTED PRIOR TO COMPLETION OF THE BRIDGE DECK.

FOR REINFORCED BRIDGE APPROACH FILL INCLUDING FABRIC, IMPERMEABLE GEOMEMBRANE, 102mm Ø DRAINAGE PIPE, #78M STONE, AND SELECT MATERIAL, SEE ROADWAY PLANS.

TEMPORARY DRAINAGE AND TEMPORARY BERM AND SLOPE DRAINS WILL BE PAID FOR UNDER THE LUMP SUM PRICE FOR BRIDGE APPROACH SLAB.

AREA BETWEEN THE WINGWALL AND APPROACH SLAB SHALL BE GRADED TO DRAIN THE WATER AWAY FROM THE FILL FACE OF THE BRIDGE.

THE 150mm COMP. A.B.C. SHALL EXTEND 3.000m BEYOND THE END OF THE SLEEPER SLAB AND 300mm OUTSIDE OF EACH EDGE OF THE SLEEPER SLAB. THIS MATERIAL ALSO SHALL BE PLACED BETWEEN THE SLEEPER SLAB AND THE ABUTMENT AND 300mm OUTSIDE OF EACH EDGE OF THE APPROACH SLAB.

THE CONTRACTOR MAY USE 100mm TYPE B-25.0B ASPHALT CONCRETE BASE COURSE IN LIEU OF 150mm COMP. A.B.C. IF THIS OPTION IS USED, THE BASE COURSE SHALL EXTEND 300mm BEYOND THE END OF THE SLEEPER SLAB AND THE WIDTH SHALL BE THE SAME AS THAT OF THE SLEEPER SLAB. THIS MATERIAL ALSO SHALL BE PLACED BETWEEN THE SLEEPER SLAB AND THE ABUTMENT AND THE WIDTH SHALL BE THE SAME AS THAT OF THE APPROACH SLAB.

THE CONTRACTOR MAY USE 125mm CLASS "A" CONCRETE BASE IN LIEU OF 150mm COMP. A.B.C. IF THIS OPTION IS USED, THE CONCRETE BASE SHALL EXTEND 300mm BEYOND THE END OF THE SLEEPER SLAB AND THE WIDTH SHALL BE THE SAME AS THAT OF THE SLEEPER SLAB. THIS MATERIAL ALSO SHALL BE PLACED BETWEEN THE SLEEPER SLAB AND THE ABUTMENT AND THE WIDTH SHALL BE THE SAME AS THAT OF THE APPROACH SLAB. THE CONCRETE SHALL BE FINISHED TO A SMOOTH SURFACE AND A LAYER OF 13.6 Kg. ROOFING FELT SHALL BE PLACED BETWEEN THE CONCRETE BASE AND THE APPROACH SLAB TO PREVENT BOND. THE APPROACH SLAB SHALL NOT BE CAST UNTIL THE CONCRETE BASE HAS REACHED AN AGE OF THREE CURING DAYS.

BILL OF MATERIAL

FOR ONE APPROACH SLAB (2 REQ'D)

BAR	NO.	SIZE	TYPE	LENGTH	WEIGHT
✳ A1	52	#13	STR	6380	330
A2	52	#13	STR	6360	329
✳ A3	14	#13	STR	6380	89
✳ B1	82	#16	STR	7380	939
B2	82	#19	STR	7520	1378
✳ B3	14	#16	STR	3560	77
✳ B4	2	#16	3	1940	6
L1	82	#16	1	900	115
✳ S1	50	#16	STR	980	76
✳ S2	50	#16	1	1220	95
✳ S3	20	#16	2	680	21
✳ U1	82	#13	4	1240	101

REINFORCING STEEL = 1822 KG
✳ EPOXY COATED REINF. STEEL = 1734 KG

CLASS AA CONCRETE BREAKDOWN

POUR 1	SLEEPER SLAB AND CURB	3.4 C.M.
POUR 2	SLAB AND CURB	28.7 C.M.
POUR 3	RAIL	1.6 C.M.
CLASS AA CONCRETE		33.7 C.M.

BAR TYPES

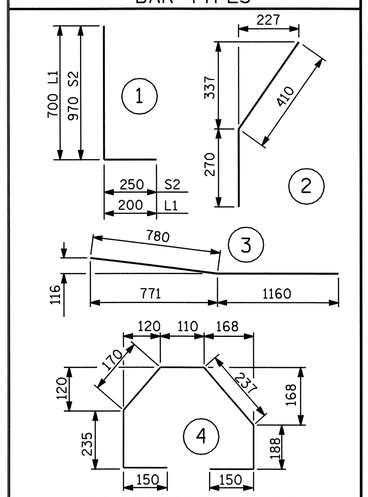

ALL BAR DIMENSIONS ARE OUT TO OUT

PROJECT NO. R-0609IA
GUILFORD COUNTY
STATION: 52+93.640 -L-

SHEET 1 OF 4

STATE OF NORTH CAROLINA
DEPARTMENT OF TRANSPORTATION
RALEIGH

BRIDGE
APPROACH SLAB
FOR FLEXIBLE
PAVEMENT WITH
BARRIER RAIL

NORTH CAROLINA PROFESSIONAL SEAL 23926 ENGINEER BRIAN C. HAWKS
5/22/06

REVISIONS						SHEET NO.
NO.	BY:	DATE:	NO.	BY:	DATE:	S-224
1			3			TOTAL SHEETS
2			4			321

DRAWN BY : M. D. PISO DATE : 08/2004
CHECKED BY : J. L. WALTON DATE : 10/2004

15-MAY-2006 13:32
G:\STRUCT~1\frye\FINAL_~1\Str7\R0609I~2.DGN
dely

STR. #7

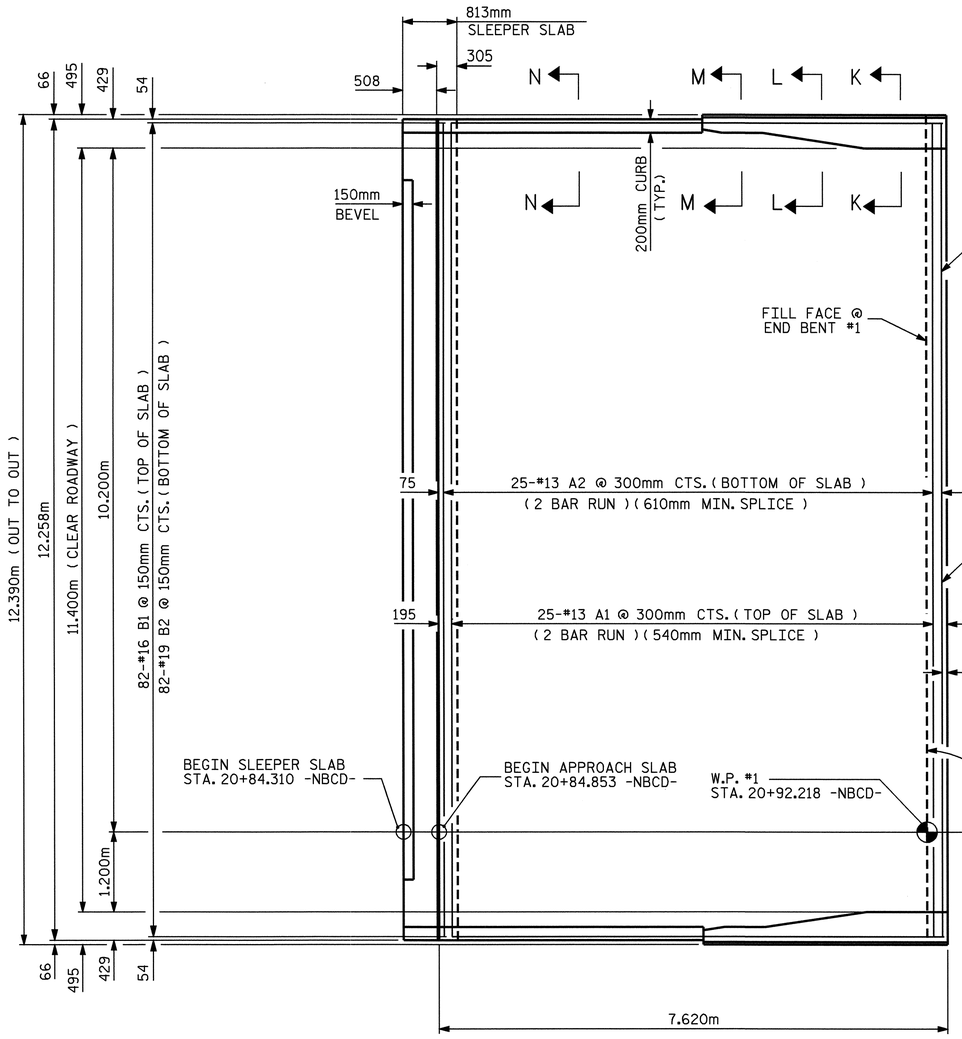

PLAN @ END BENT #1

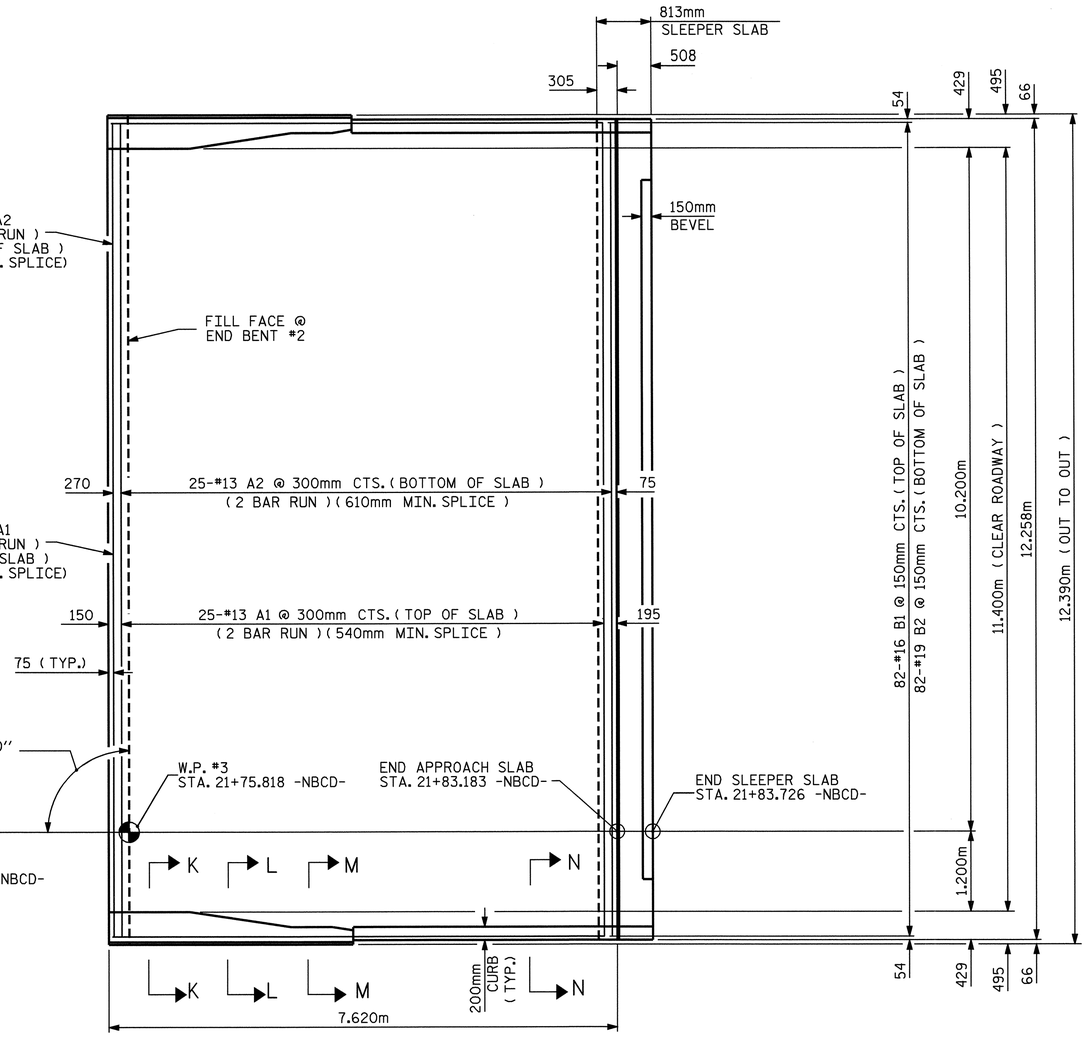

PLAN @ END BENT #2

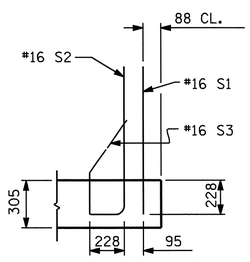

SECTION K-K

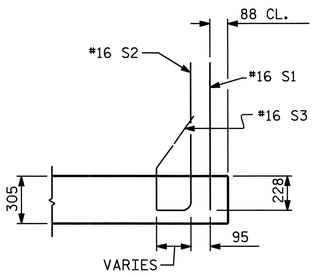

SECTION L-L

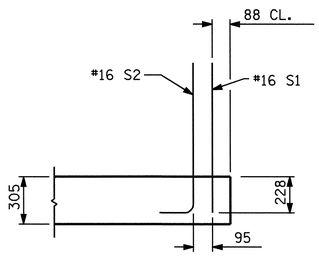

SECTION M-M

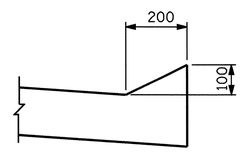

SECTION N-N

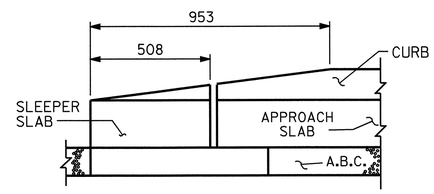

END OF CURB WITHOUT
SHOULDER BERM GUTTER

CURB DETAILS

PROJECT NO. R-0609IA
GUILFORD COUNTY
STATION: 52+93.640 -L-

SHEET 2 OF 4

STATE OF NORTH CAROLINA
DEPARTMENT OF TRANSPORTATION
RALEIGH

BRIDGE APPROACH SLAB FOR FLEXIBLE PAVEMENT WITH BARRIER RAIL

NORTH CAROLINA PROFESSIONAL SEAL 23926 ENGINEER BRIAN C. HAWKS
5/22/06

REVISIONS							
NO.	BY:	DATE:	NO.	BY:	DATE:		
1			3				
2			4				

SHEET NO. S-225
TOTAL SHEETS 321

DRAWN BY : M. D. PISO DATE : 08/2004
CHECKED BY : J. L. WALTON DATE : 10/2004

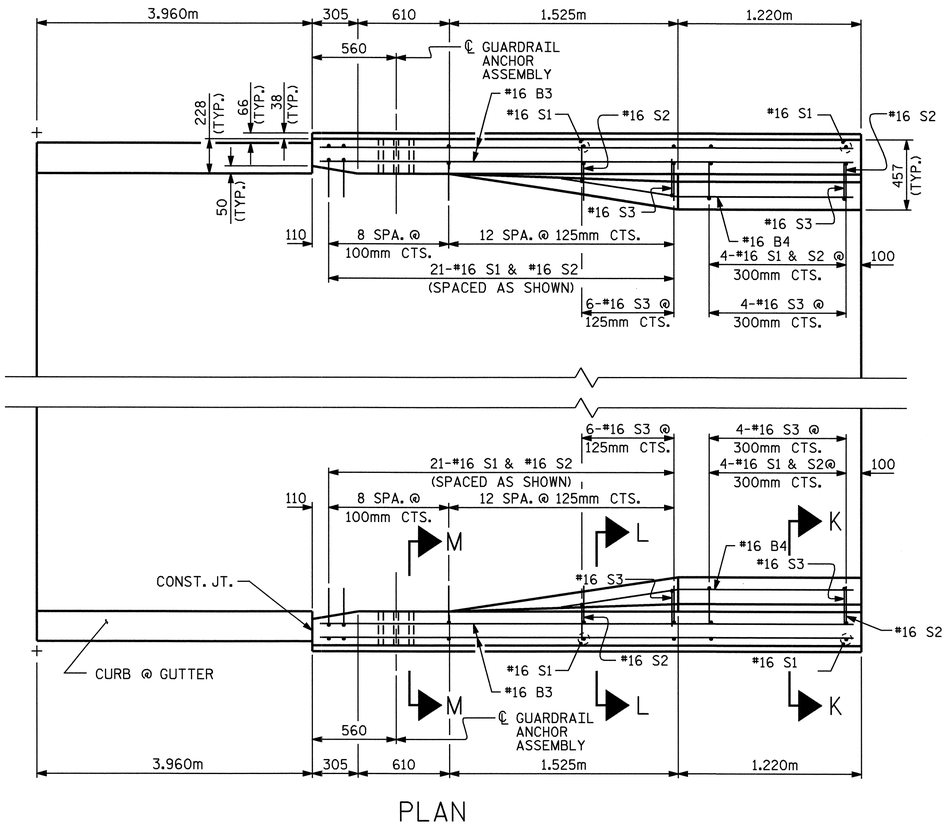

PLAN

BEGIN APPROACH SLAB SHOWN, END APPROACH SLAB SIMILAR

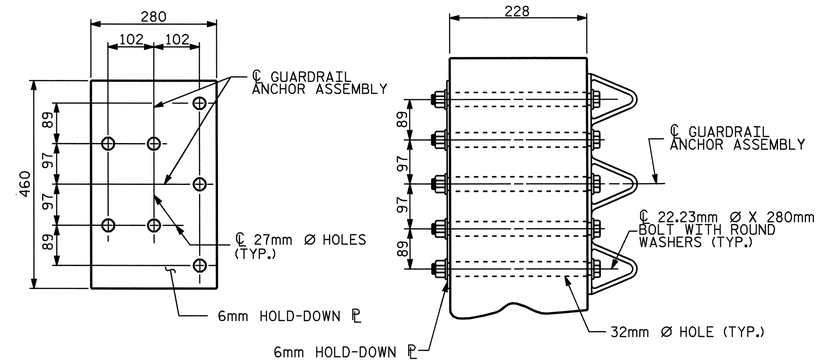

PLAN

SECTION E-E

GUARDRAIL ANCHOR ASSEMBLY DETAILS

NOTES

THE GUARDRAIL ANCHOR ASSEMBLY SHALL CONSIST OF A 6mm HOLD DOWN PLATE AND 7 - 22.23mm Ø BOLTS WITH NUTS AND WASHERS.

THE HOLD-DOWN PLATE SHALL CONFORM TO AASHTO M270 GRADE 250. AFTER FABRICATION, THE HOLD-DOWN PLATE SHALL BE GALVANIZED IN ACCORDANCE WITH AASHTO M111.

BOLTS SHALL CONFORM TO THE REQUIREMENTS OF ASTM A307 AND NUTS SHALL CONFORM TO THE REQUIREMENTS OF AASHTO M291M. BOLTS, NUTS AND WASHERS SHALL BE GALVANIZED. AT THE CONTRACTOR'S OPTION, STAINLESS STEEL BOLTS, NUTS AND WASHERS MAY BE USED AS AN ALTERNATE FOR THE 22.23mm Ø GALVANIZED BOLTS, NUTS AND WASHERS. THEY SHALL CONFORM TO OR EXCEED THE MECHANICAL REQUIREMENTS OF ASTM A307. THE USE OF THIS ALTERNATE SHALL BE APPROVED BY THE ENGINEER.

AFTER INSTALLATION, THE EXPOSED THREAD OF THE BOLT SHALL BE BURRED WITH A SHARP POINTED TOOL.

THE COST OF THE GUARDRAIL ANCHOR ASSEMBLIES WITH BOLTS, NUTS AND WASHERS COMPLETE IN PLACE, SHALL BE INCLUDED IN THE LUMP SUM CONTRACT PRICE BID FOR BRIDGE APPROACH SLABS.

THE 32mm Ø HOLES SHALL BE FORMED OR DRILLED WITH A CORE BIT. IMPACT TOOLS WILL NOT BE PERMITTED. ANY CONCRETE DAMAGED BY THIS WORK SHALL BE REPAIRED TO THE SATISFACTION OF THE ENGINEER.

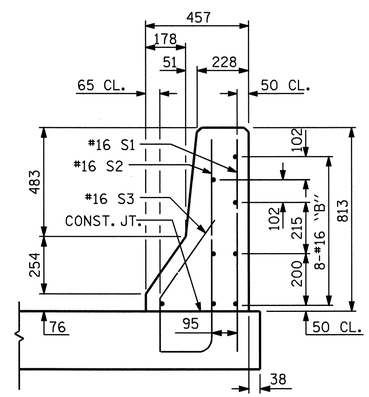

SECTION K-K

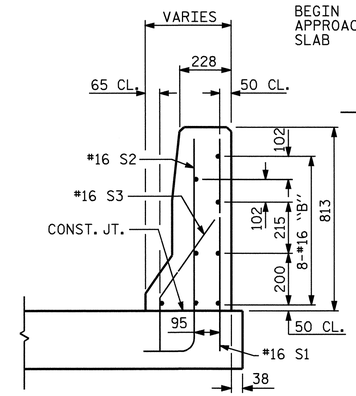

SECTION L-L

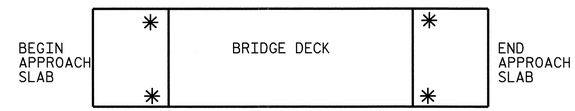

SKETCH SHOWING POINTS OF ATTACHMENT

✱ INDICATES POINTS OF ATTACHMENT

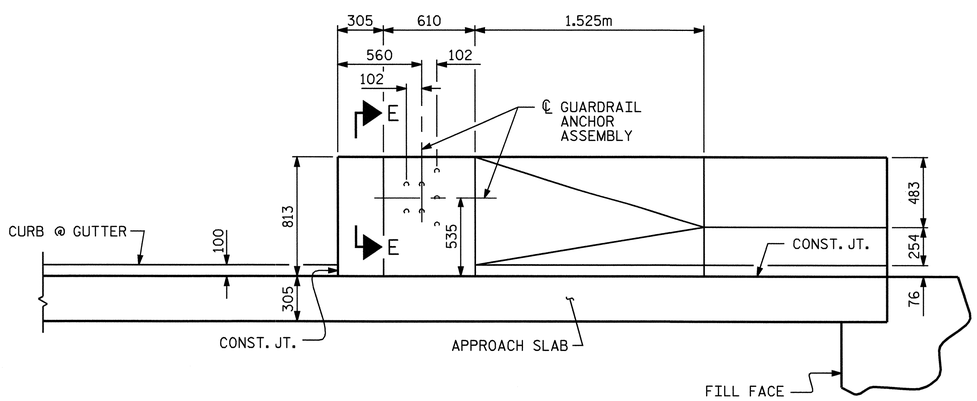

ELEVATION

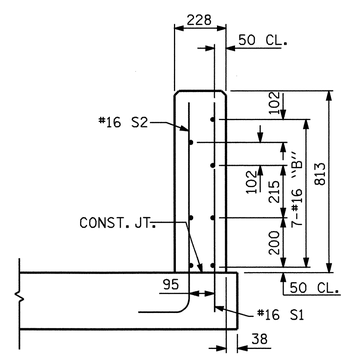

SECTION M-M

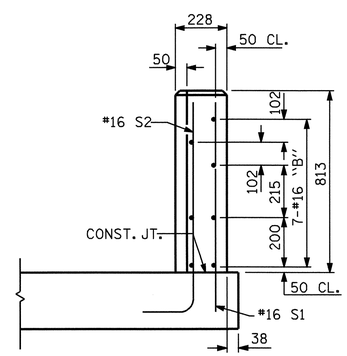

END VIEW

PROJECT NO. R-0609IA

GUILFORD COUNTY

STATION: 52+93.640 -L-

SHEET 3 OF 4

STATE OF NORTH CAROLINA
DEPARTMENT OF TRANSPORTATION
RALEIGH

BRIDGE APPROACH SLAB FOR FLEXIBLE PAVEMENT WITH BARRIER RAIL

NORTH CAROLINA PROFESSIONAL SEAL 23926 ENGINEER BRIAN C. HAWKINS
5/22/06

REVISIONS						SHEET NO.
NO.	BY:	DATE:	NO.	BY:	DATE:	S-226
1			3			TOTAL SHEETS
2			4			321

DRAWN BY : M. D. PISO DATE : 08/2004
CHECKED BY : J. L. WALTON DATE : 10/2004

15-MAY-2006 13:31
G:\STRUCT~1\frye\FINAL_~1\Str7\R0609I~2.DGN
dely

STR. #7

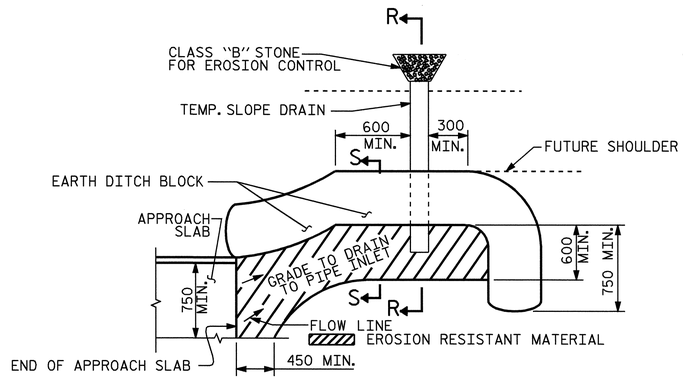

NOTE: IMMEDIATELY AFTER THE CONSTRUCTION OF THE APPROACH SLAB, THE CONTRACTOR SHALL PROVIDE TEMPORARY BERM AND SLOPE DRAIN. CONTRACTOR SHALL GRADE TO PIPE INLET AND PROVIDE EROSION RESISTANT MATERIAL AS SHOWN. THE EROSION RESISTANT MATERIAL SHALL BE EITHER 1) ASPHALT PLANT MIX, TYPE 1 OR TYPE 2, MIN. 50mm DEPTH, 2) EROSION CONTROL MAT, OR 3) CONCRETE, AS DIRECTED BY THE ENGINEER. THE SLOPE DRAIN SHALL CONSIST OF A NON-PERFORATED TEMPORARY DRAINAGE PIPE, 305mm IN DIAMETER.

PLAN VIEW

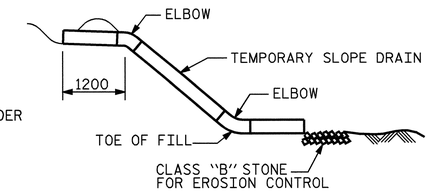

SECTION R-R

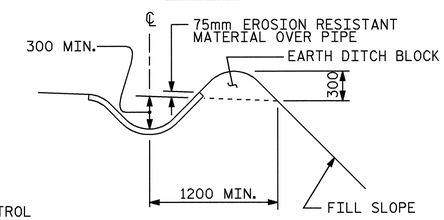

SECTION S-S

TEMPORARY BERM AND SLOPE DRAIN DETAILS

(TO BE USED WHEN SHOULDER BERM GUTTER IS REQUIRED)

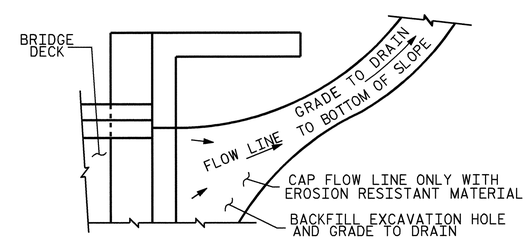

NOTE: IF THE APPROACH SLAB IS NOT CONSTRUCTED IMMEDIATELY AFTER THE BACKFILLING OF THE END BENT EXCAVATION, GRADE TO DRAIN TO THE BOTTOM OF THE SLOPE AND PROVIDE EROSION RESISTANT MATERIAL, SUCH AS FIBERGLASS ROVING OR AS DIRECTED BY THE ENGINEER TO PREVENT SOIL EROSION AND TO PROTECT THE AREA ADJACENT TO THE STRUCTURE. THE CONTRACTOR WILL BE REQUIRED TO REMOVE THESE MATERIALS PRIOR TO CONSTRUCTION OF THE APPROACH SLAB.

TEMPORARY DRAINAGE DETAIL

PROJECT NO. R-0609IA

GUILFORD COUNTY

STATION: 52+93.640 -L-

SHEET 4 OF 4

STATE OF NORTH CAROLINA
DEPARTMENT OF TRANSPORTATION
RALEIGH

BRIDGE APPROACH SLAB DETAILS

NORTH CAROLINA PROFESSIONAL SEAL 23926 ENGINEER BRIAN C. HANKS
5/22/06

REVISIONS						SHEET NO.
NO.	BY:	DATE:	NO.	BY:	DATE:	S-227
1			3			TOTAL SHEETS
2			4			321

DRAWN BY : M. D. PISO DATE : 08/2004
CHECKED BY : J. L. WALTON DATE : 10/2004

15-MAY-2006 13:31
G:\STRUCT~1\frye\FINAL_~1\Str7\R0609I~2.DGN
dely

STR. #7

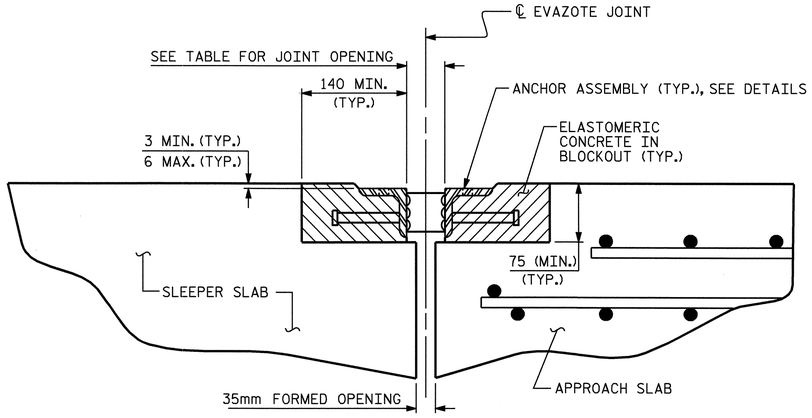

ARMORED JOINT DETAILS

SECTION NORMAL TO JOINT AT APPROACH SLAB

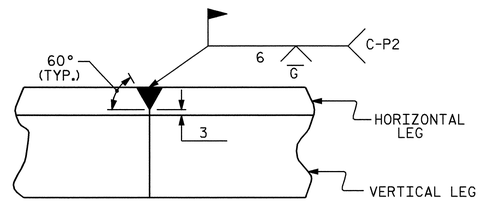

DETAIL- FIELD WELD SPLICE OF ANGLE

NOTES

ANGLES SHALL CONFORM TO AASHTO M270 GRADE 250 STEEL OR APPROVED EQUAL. ALL STUD ANCHORS SHALL CONFORM TO AASHTO M169 GRADES 1010 THRU 1020 OR APPROVED EQUAL.

STUD ANCHORS SHALL BE SHOP WELDED AND ALL HOLES SHALL BE SHOP DRILLED AS SHOWN ON THE PLANS. STUD ANCHORS SHALL BE ELECTRIC ARC END WELDED WITH COMPLETE FUSION.

UPON COMPLETION OF SHOP FABRICATION, THE ENTIRE ANCHOR ASSEMBLY SHALL BE METALLIZED. THE 12.70mm Ø STUD ANCHORS AND ANCHOR TABS NEED NOT BE METALLIZED. SEE SPECIAL PROVISION FOR THERMAL SPRAYED COATINGS (METALLIZATION).

ANCHOR ASSEMBLY SHALL BE MADE CONTINUOUS THE LENGTH OF THE JOINT FROM GUTTER TO GUTTER. FOR FIELD SPLICES AT ALL CROWN BREAK POINTS, THE ENDS OF THE STEEL ANGLES SHALL BE CUT PARALLEL TO THE BRIDGE CENTERLINE. FINISHED FIELD WELDS SHALL BE GROUND SMOOTH AND COATED WITH A MINIMUM THICKNESS OF 0.100mm OF ZINC-RICH PAINT IN ACCORDANCE WITH THE STANDARD SPECIFICATIONS.

ANCHOR ASSEMBLY SEGMENTS SHALL NOT BE LESS 3.6m NOR MORE THAN 6.1m IN LENGTH. SHORTER SEGMENTS MAY BE USED AT THE EDGE OF ROADWAY OR AT POINTS OF STAGED CONSTRUCTION.

THE ANCHOR ASSEMBLY SHALL BE SECURED AND LEVELED AS SHOWN IN THE "ARMORED JOINT ANCHOR ASSEMBLY DETAILS". NO SUBMITTALS ARE REQUIRED FOR 9.53mm Ø EXPANSION ANCHORS, NUTS OR WASHERS. THE CONTRACTOR MAY SUBMIT FOR APPROVAL AN ALTERNATE METHOD OF ALIGNING AND LEVELING THE ANGLES. THE ALTERNATE METHOD SHALL NOT INCLUDE ANY WELDING TO THE OUTSIDE FACE OF THE ANGLES.

AFTER THE ELASTOMERIC CONCRETE HAS BEEN CAST ON BOTH SIDES OF THE JOINT, REMOVE ANY EXCESS CONCRETE THAT COMES THROUGH THE WEEP HOLES AND THOROUGHLY CLEAN THE ANGLES. ANY DAMAGED STEEL SHALL BE COATED WITH A MINIMUM OF 0.100mm OF ZINC-RICH PAINT IN ACCORDANCE WITH THE STANDARD SPECIFICATIONS.

SEE SPECIAL PROVISIONS FOR EVAZOTE JOINT SEALS.

SEE SPECIAL PROVISIONS FOR ELASTOMERIC CONCRETE.

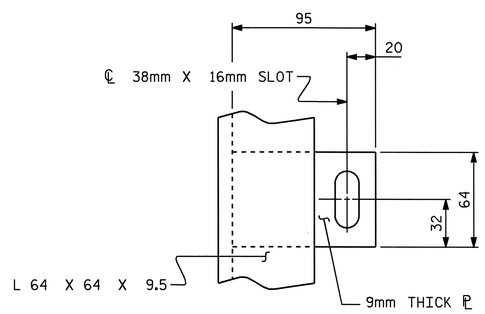

PLAN VIEW OF TAB

MOVEMENT AND SETTING AT EVAZOTE JOINT						
APPROACH SLAB NO.	SKEW ANGLE	NOMINAL UNCOMPRESSED SEAL WIDTH	TOTAL MOVEMENT (ALONG ℄ RDWY)	PERPENDICULAR JOINT OPENING AT 7° C	PERPENDICULAR JOINT OPENING AT 16° C	PERPENDICULAR JOINT OPENING AT 32° C
1	90°-00'-00"	80mm	41mm	67mm	60mm	48mm
2	90°-00'-00"	80mm	41mm	67mm	60mm	48mm

TOTAL MOVEMENT IS CALCULATED ALONG THE CENTERLINE OF ROADWAY.
JOINT OPENINGS ARE MEASURED PERPENDICULAR TO THE JOINT.

BILL OF MATERIAL		
APPROACH SLAB NO.	ELASTOMERIC CONCRETE ✳ (CU. m)	TOTAL LENGTH OF ANGLE (m)
1	0.3	23.000m
2	0.3	23.000m

✳ BASED ON THE MINIMUM BLOCKOUT SHOWN.

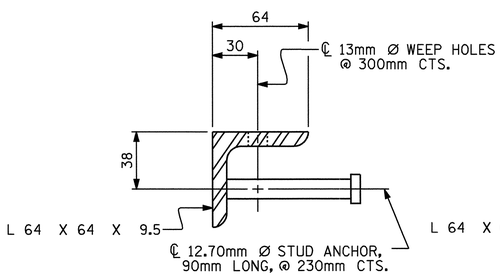

SECTION VIEW OF STUD

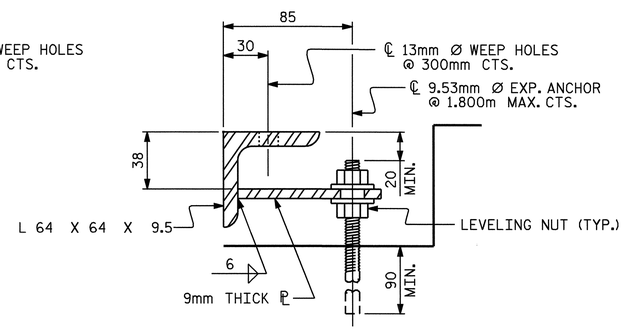

SECTION VIEW OF TAB

ARMORED JOINT ANCHOR ASSEMBLY DETAILS

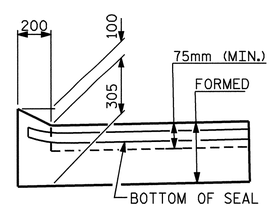

SECTION A-A

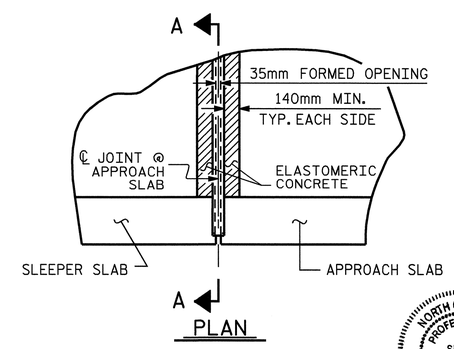

PLAN

PROJECT NO. R-0609IA
GUILFORD COUNTY
STATION: 52+93.640 -L-

STATE OF NORTH CAROLINA
DEPARTMENT OF TRANSPORTATION
RALEIGH

STANDARD ARMORED EVAZOTE JOINT DETAILS

NORTH CAROLINA PROFESSIONAL SEAL 23926 ENGINEER BRIAN C. HANKS
5/22/06

REVISIONS							
NO.	BY:	DATE:	NO.	BY:	DATE:	SHEET NO.	S-228
1			3			TOTAL SHEETS	321
2			4				

ASSEMBLED BY : R.W. WRIGHT		DATE : 6-05	
CHECKED BY : B.C. HANKS		DATE : 7-01-05	
DRAWN BY : EEM 1/96	REV. 10/17/00	RWW/LES	
CHECKED BY : RGW 1/96	REV. 7/10/01	LES/RDR	
	REV. 5/7/03RR	RWW/JTE	

15-MAY-2006 13:20
G:\STRUCT~1\frye\FINAL_~1\Str7\R0609I~1.DGN
dely

STR. #7

STD. NO. AEJ1SM

F. A. PROJECT: STP-NHF-119-1(15)

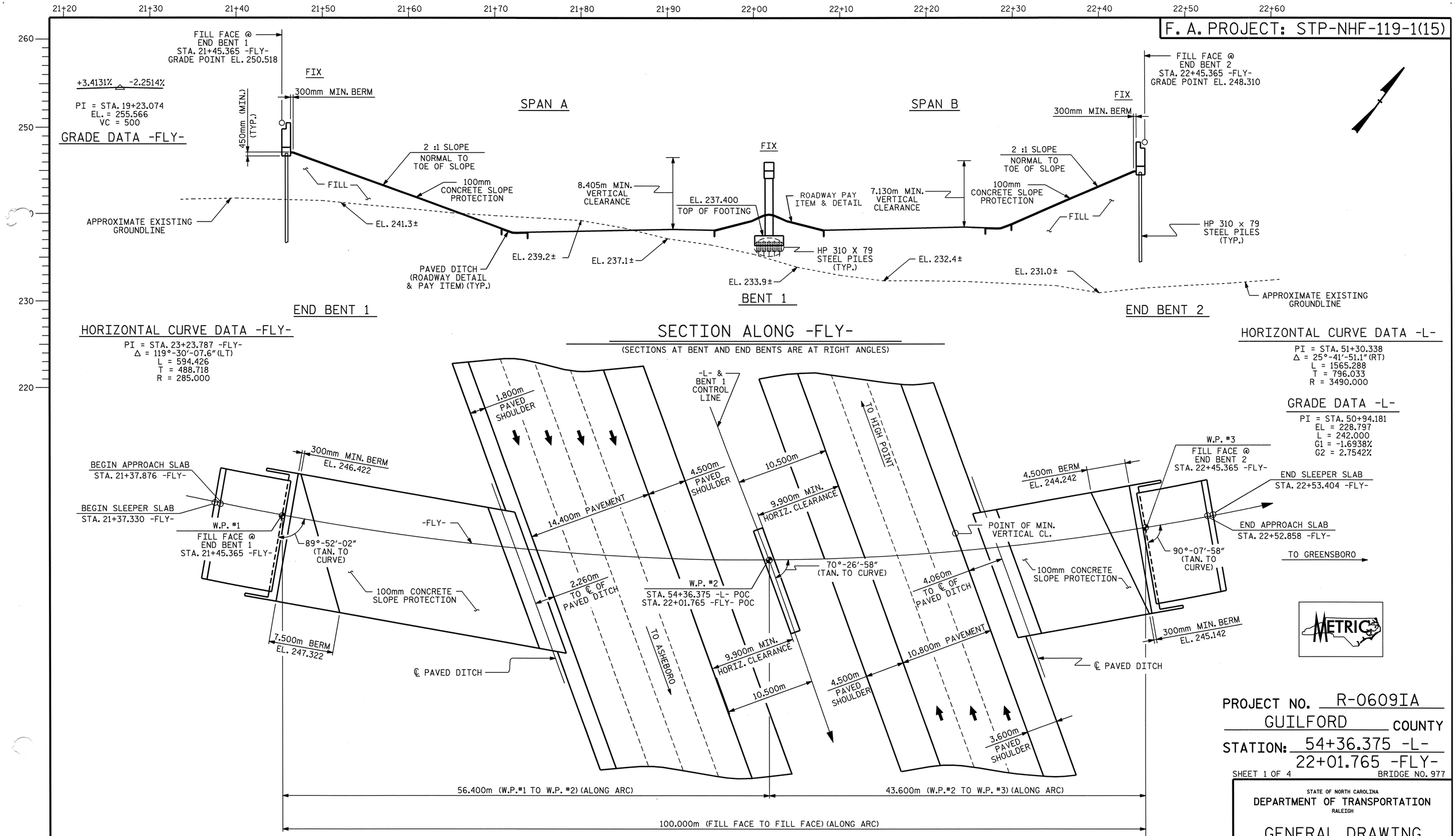

PROJECT NO. R-0609IA

GUILFORD COUNTY

STATION: 54+36.375 -L-
22+01.765 -FLY-

SHEET 1 OF 4

BRIDGE NO. 977

STATE OF NORTH CAROLINA
DEPARTMENT OF TRANSPORTATION
RALEIGH

GENERAL DRAWING FOR FLYOVER BRIDGE OVER US 311 BETWEEN SR 1154 AND I-85

NORTH CAROLINA PROFESSIONAL SEAL 11916 ENGINEER JOHN C. FRYE 5/22/06

NORTH CAROLINA PROFESSIONAL SEAL 23926 ENGINEER BRIAN C. HANNIS 5/22/06

REVISIONS								SHEET NO.
NO.	BY:	DATE:	NO.	BY:	DATE:			S-229
1			3					TOTAL SHEETS
2			4					321

DRAWN BY : D. G. ELY DATE : 3/24/04
CHECKED BY : K. W. ALFORD DATE : 7/27/05

15-MAY-2006 12:46
J:\STRUCT~1\frye\FINAL_~1\Str8\R0609IA_sd_GD_08.dgn
rwwright

STR. #8

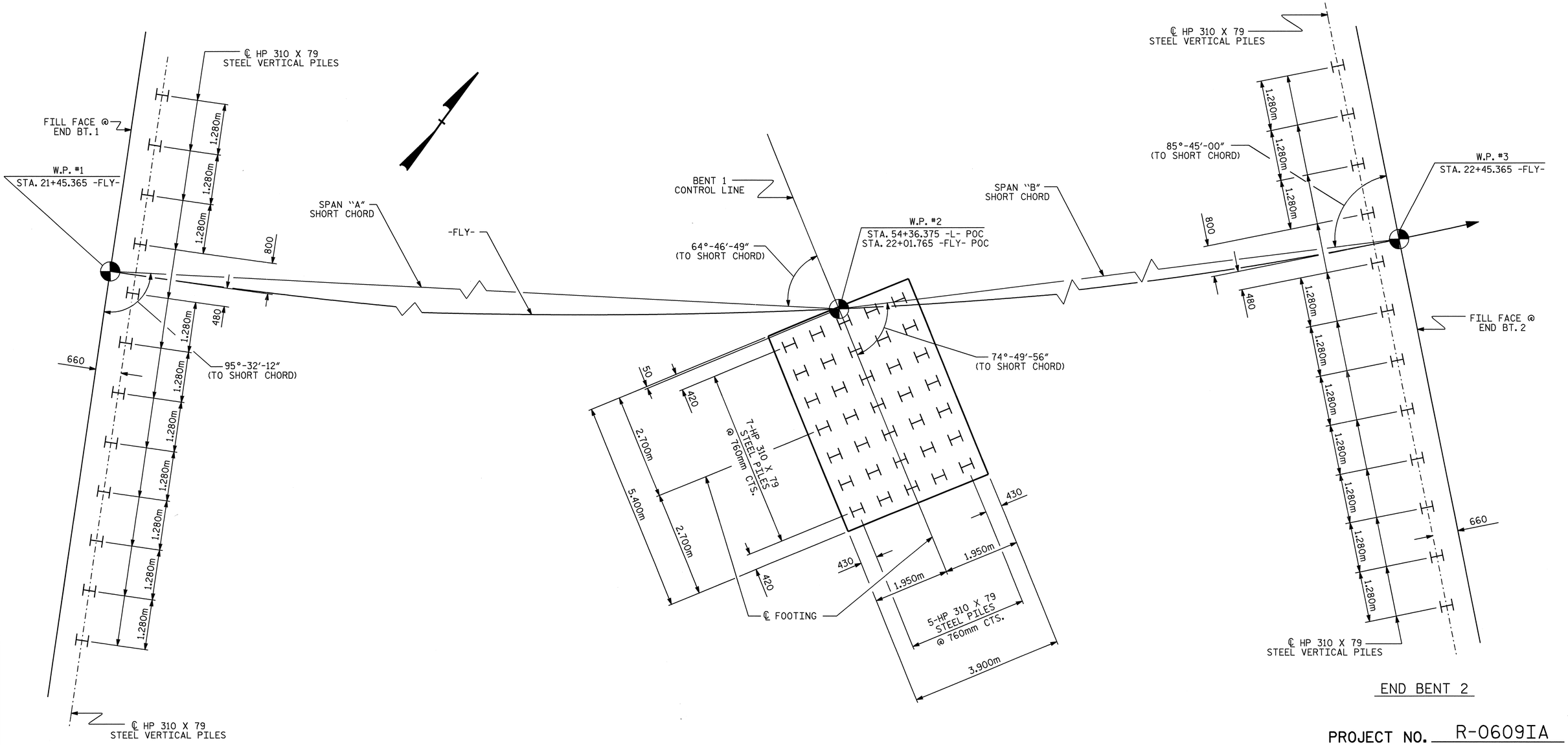

END BENT 1

BENT 1

END BENT 2

NOTES

PILES FOR END BENT NO. 1 SHALL BE DRIVEN TO A MINIMUM BEARING CAPACITY OF 620 kN EACH.

PILES FOR END BENT NO. 2 SHALL BE DRIVEN TO A MINIMUM BEARING CAPACITY OF 530 kN EACH.

PILES FOR BENT NO. 1 SHALL BE DRIVEN TO A MINIMUM BEARING CAPACITY OF 620 kN EACH.

WHEN DRIVING PILES, THE MAXIMUM BLOW COUNT SHALL NOT BE EXCEEDED.

DO NOT START WORK AT BENT NO. 1 UNTIL FILL HAS BEEN PLACED.

EXCAVATION OF ROADWAY FILL REQUIRED TO CONSTRUCT THE PILE FOOTING SHALL BE CONSIDERED INCIDENTAL TO THE COST OF THE BENT CONSTRUCTION.

FOUNDATION LAYOUT

(DIMENSIONS LOCATING PILES ARE SHOWN TO THE PILE CENTERLINE)
(DIMENSIONS LOCATING FOOTING ARE SHOWN TO THE FOOTING CENTERLINE)

PROJECT NO. R-0609IA
GUILFORD COUNTY
STATION: 54+36.375 -L-

SHEET 2 OF 4

STATE OF NORTH CAROLINA
DEPARTMENT OF TRANSPORTATION
RALEIGH

GENERAL DRAWING FOR FLYOVER BRIDGE OVER US 311 BETWEEN SR 1154 AND I-85

NORTH CAROLINA PROFESSIONAL SEAL 23926 ENGINEER BRIAN C. HAWKINS
5/22/06

REVISIONS						SHEET NO.
NO.	BY:	DATE:	NO.	BY:	DATE:	S-230
1			3			TOTAL SHEETS
2			4			321

DRAWN BY : D. G. ELY DATE : 7/8/05
CHECKED BY : K. W. ALFORD DATE : 7/17/05

15-MAY-2006 12:37
J:\STRUCT~1\frye\FINAL_~1\Str8\R0609IA_sd_GD_08.dgn
rwwright

STR. 8

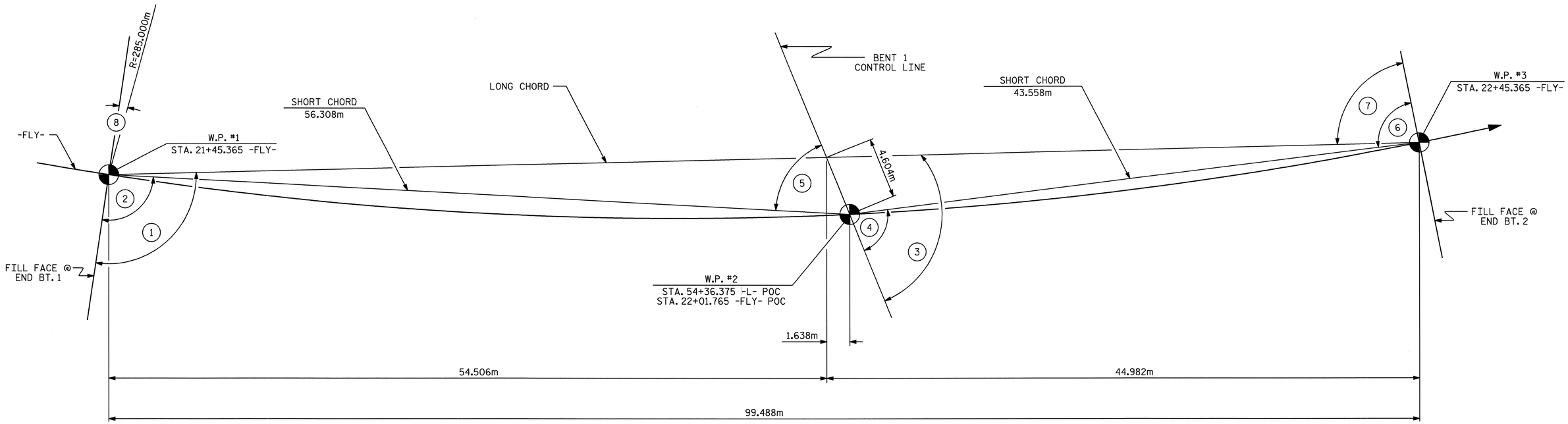

LONG CHORD LAYOUT

ANGLES

	DEG MIN SEC
1	99°-55′-09″
2	95°-32′-12″
3	69°-09′-47″
4	74°-49′-56″
5	64°-46′-49″
6	85°-45′-00″
7	80°-04′-51″
8	0°-07′-58″

HORIZONTAL CURVE DATA -FLY-

PIs STA. 18+01.843	PI = STA. 23+23.787	PIs STA. 24+49.516
Ø = 10°-03′-06.8″	Δ = 119°-30′-07.6″(LT)	Ø = 6°-01′-52.1″
Ls = 100.000m	L = 594.426	Ls = 60.000m
LT = 66.774m	T = 488.718	LT = 40.023m
ST = 33.431m	R = 285.000	ST = 20.021m

PROJECT NO. R-0609IA
GUILFORD COUNTY
STATION: 54+36.375 -L-

SHEET 3 OF 4

STATE OF NORTH CAROLINA
DEPARTMENT OF TRANSPORTATION
RALEIGH

GENERAL DRAWING
FOR FLYOVER BRIDGE
OVER US 311 BETWEEN
SR 1154 AND I-85

NORTH CAROLINA PROFESSIONAL SEAL 23926 ENGINEER BRIAN C. HANKS
5/22/06

REVISIONS						SHEET NO.
NO.	BY:	DATE:	NO.	BY:	DATE:	S-231
1			3			TOTAL SHEETS
2			4			321

DRAWN BY : D. G. ELY DATE : 7/8/05
CHECKED BY : K. W. ALFORD DATE : 7/27/05

15-MAY-2006 12:22
J:\STRUCT~1\frye\FINAL_~1\Str8\R0609IA_sd_GD_08.dgn
rwwright

BENCHMARK #6: RAILROAD SPIKE IN 470mm POPLAR 67m LEFT OF -BL- STA. 49+62.000, EL. 236.930

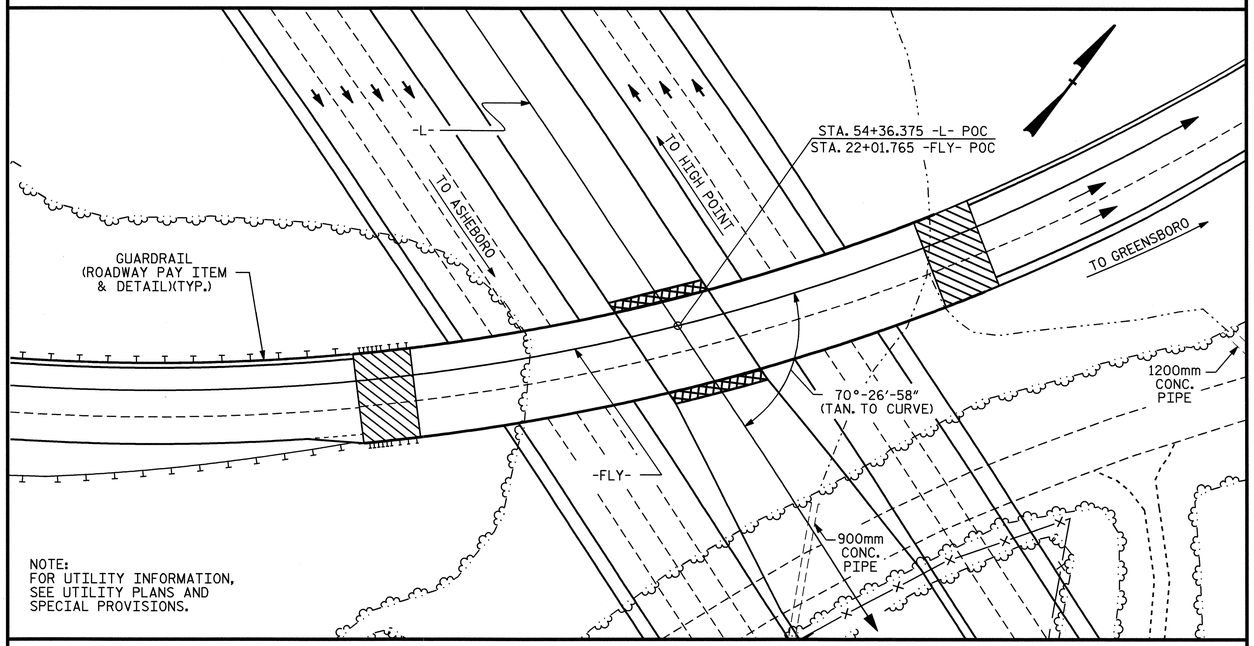

LOCATION SKETCH

NOTES

ALL DIMENSIONS ARE IN MILLIMETERS UNLESS OTHERWISE NOTED.

ALL ELEVATIONS ARE IN METERS.

ASSUMED LIVE LOAD = MS 18 OR ALTERNATE LOADING.

THIS BRIDGE HAS BEEN DESIGNED IN ACCORDANCE WITH THE REQUIREMENTS OF THE AASHTO STANDARD SPECIFICATIONS FOR SEISMIC DESIGN OF HIGHWAY BRIDGES FOR SEISMIC PERFORMANCE CATEGORY A.

THIS BRIDGE HAS BEEN DESIGNED BY THE STRENGTH DESIGN METHOD AS SPECIFIED IN AASHTO STANDARD SPECIFICATIONS.

FOR OTHER DESIGN DATA AND GENERAL NOTES, SEE SHEET SNSM.

FOR EROSION CONTROL MEASURES SEE EROSION CONTROL PLANS.

THE CONTRACTOR SHALL PROVIDE INDEPENDENT ASSURANCE SAMPLES OF REINFORCING STEEL AS FOLLOWS: FOR PROJECTS REQUIRING UP TO 360,000 kg OF REINFORCING STEEL, ONE 760mm SAMPLE OF EACH SIZE BAR USED, AND FOR PROJECTS REQUIRING OVER 360,000 kg OF REINFORCING STEEL, TWO 760mm SAMPLES OF EACH SIZE BAR USED. THE BARS FROM WHICH THE SAMPLES ARE TAKEN MUST THEN BE SPLICED WITH REPLACEMENT BARS OF THE SIZE AND LENGTH OF THE SAMPLE PLUS A MINIMUM LAP SPLICE OF THIRTY BAR DIAMETERS.

REMOVABLE FORMS MAY BE USED IN LIEU OF METAL STAY-IN-PLACE FORMS IN ACCORDANCE WITH ARTICLE 420-3 OF THE STANDARD SPECIFICATIONS.

ALL STRUCTURAL STEEL SHALL BE AASHTO M270 GRADE 345W AND PAINTED IN ACCORDANCE WITH SYSTEM 4 OF ARTICLE 442-7 OF THE STANDARD SPECIFICATIONS UNLESS OTHERWISE NOTED ON THE PLANS.

THE CLASS AA CONCRETE IN THE BRIDGE DECK SHALL CONTAIN FLY ASH OR GROUND GRANULATED BLAST FURNACE SLAG AT THE SUBSTITUTION RATE SPECIFIED IN ARTICLE 1024-1 AND IN ACCORDANCE WITH ARTICLES 1024-5 AND 1024-6 OF THE STANDARD SPECIFICATIONS. NO PAYMENT WILL BE MADE FOR THIS SUBSTITUTION AS IT IS CONSIDERED INCIDENTAL TO THE COST OF THE REINFORCED CONCRETE DECK SLAB.

NEEDLE BEAMS WILL NOT BE ALLOWED UNLESS OTHERWISE CALLED FOR ON THE PLANS OR APPROVED BY THE ENGINEER.

FOR SUBMITTAL OF WORKING DRAWINGS, SEE SPECIAL PROVISIONS.

FOR METRIC STRUCTURAL STEEL, SEE SPECIAL PROVISIONS.

FOR CRANE SAFETY, SEE SPECIAL PROVISIONS.

FOR FALSEWORK AND FORMWORK, SEE SPECIAL PROVISIONS.

FOR STEEL H PILE, SEE SPECIAL PROVISIONS.

TOTAL BILL OF MATERIAL

	REINFORCED CONCRETE DECK SLAB	GROOVING BRIDGE FLOORS	CLASS A CONCRETE	BRIDGE APPROACH SLABS	REINFORCING STEEL	STRUCTURAL STEEL	HP 310 X 79 STEEL PILES		CONCRETE BARRIER RAIL	100mm SLOPE PROTECTION	POT BEARINGS	ELASTOMERIC BEARINGS	EVAZOTE JOINT SEALS	
	SQ. METERS	SQ. METERS	CU. METERS	LUMP SUM	kg	APPROX. kg	NO.	METERS	METERS	SQ. METERS	LUMP SUM	LUMP SUM	LUMP SUM	
SUPERSTRUCTURE	1303.2	1280.5		LUMP SUM		338,050			200.590		LUMP SUM	LUMP SUM	LUMP SUM	
END BENT 1			29.4		2976		12	66.0		430				
BENT 1			84.7		10272		35	122.5						
END BENT 2			28.7		2878		12	180.0		240				
TOTAL	1303.2	1280.5	142.8	LUMP SUM	16126	338,050	59	368.5	200.590	670	LUMP SUM	LUMP SUM	LUMP SUM	

PROJECT NO. R-0609IA
GUILFORD COUNTY
STATION: 54+36.375 -L-

SHEET 4 OF 4

STATE OF NORTH CAROLINA
DEPARTMENT OF TRANSPORTATION
RALEIGH

GENERAL DRAWING
FOR FLYOVER BRIDGE
OVER US 311 BETWEEN
SR 1154 AND I-85

NORTH CAROLINA PROFESSIONAL SEAL 23926 ENGINEER BRIAN C. HAWKS
5/22/06

REVISIONS						SHEET NO.
NO.	BY:	DATE:	NO.	BY:	DATE:	S-232
1			3			TOTAL SHEETS
2			4			321

DRAWN BY : D. G. ELY DATE : 3/24/04
CHECKED BY : K. W. ALFORD DATE : 7/27/05

15-MAY-2006 12:22
J:\STRUCT~1\frye\FINAL_~1\Str8\R0609IA_sd_GD_08.dgn
rwwright

STR. #8

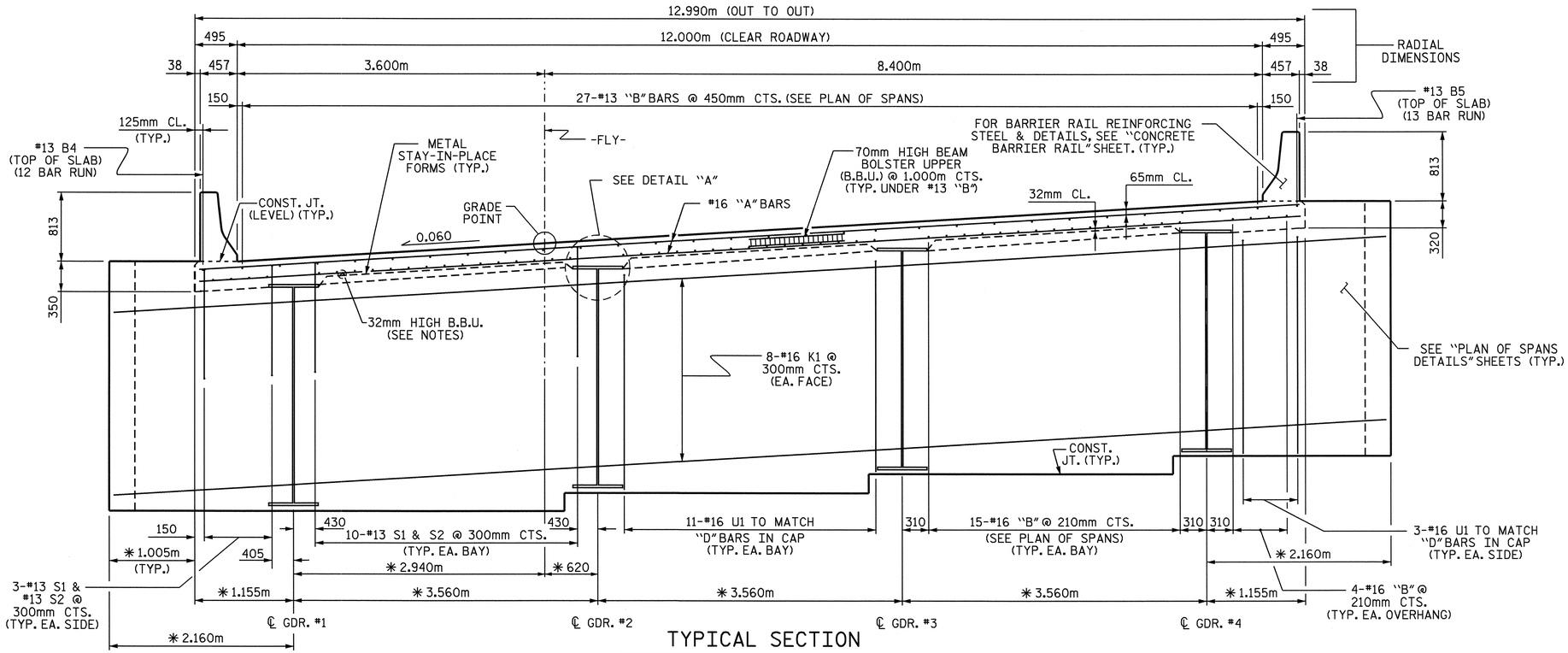

TYPICAL SECTION

(SHOWING ABUTMENT WALL AT END BENT)
(✱ INDICATES RADIAL DIMENSION)

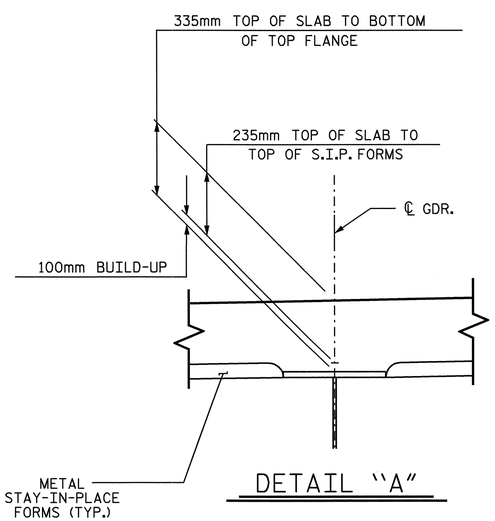

DETAIL "A"

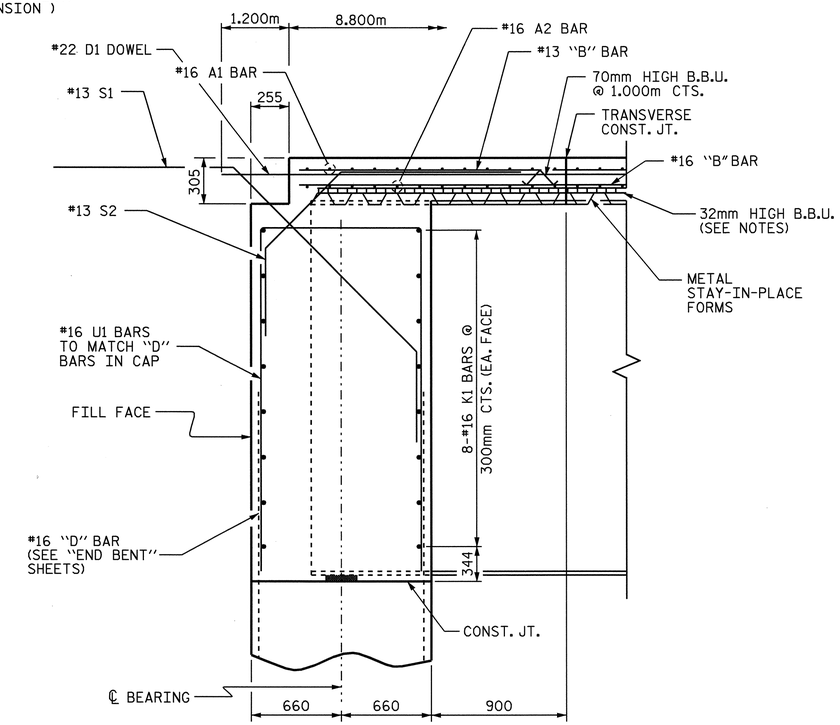

SECTION AT END BENT

(SHOWING ABUTMENT WALL)

NOTES

PROVIDE 32mm HIGH BEAM BOLSTERS UPPER AT 1.2m CTS. ATOP THE METAL STAY-IN-PLACE FORMS TO SUPPORT THE BOTTOM MAT OF 'A' BARS. WHEN USING REMOVABLE FORMS, PROVIDE CONTINUOUS HIGH CHAIRS FOR METAL DECK (C.H.C.M.) @ 1.2m CTS. WITH A HEIGHT TO SUPPORT THE BOTTOM MAT OF 'A' BARS A CLEAR DISTANCE OF 65mm ABOVE THE TOP OF THE REMOVABLE FORM.

THE CONTRACTOR MAY, WHEN NECESSARY, PROPOSE A SCHEME FOR AVOIDING INTERFERENCE BETWEEN METAL STAY-IN-PLACE FORM SUPPORTS OR FORMS AND BEAM/GIRDER STIFFENERS OR CONNECTOR PLATES. THE PROPOSAL SHALL BE INDICATED, AS APPROPRIATE, ON EITHER THE STEEL WORKING DRAWINGS OR THE METAL STAY-IN-PLACE FORM WORKING DRAWINGS.

METAL STAY-IN-PLACE FORMS SHALL NOT BE WELDED TO BEAM OR GIRDER FLANGES IN THE ZONES REQUIRING CHARPY V-NOTCH TEST. SEE STRUCTURAL STEEL DETAIL SHEETS.

PREVIOUSLY CAST CONCRETE IN A CONTINUOUS UNIT SHALL HAVE ATTAINED A MINIMUM COMPRESSIVE STRENGTH OF 20.7 MPa BEFORE ADDITIONAL CONCRETE IS CAST IN THE UNIT.

BARRIER RAIL IN A CONTINUOUS UNIT SHALL NOT BE CAST UNTIL ALL SLAB CONCRETE IN THE UNIT HAS BEEN CAST AND HAS REACHED A MINIMUM COMPRESSIVE STRENGTH OF 20.7 MPa.

STRUCTURAL STEEL ERECTION IN A CONTINUOUS UNIT SHALL BE COMPLETE BEFORE FALSEWORK OR FORMS ARE PLACED ON THE UNIT.

FOR WING ELEVATIONS AND DETAILS, SEE "PLAN OF SPANS DETAILS" SHEETS.

THE CONTRACTOR SHALL ADJUST THE GIRDER BUILDUPS AS NECESSARY TO INCORPORATE A MAXIMUM PERMISSIBLE VARIATION IN POT BEARING DEPTH OF 13mm, SEE SPECIAL PROVISION FOR POT BEARINGS.

REMOVABLE FORMS MAY BE USED IN LIEU OF METAL STAY-IN-PLACE FORMS IN ACCORDANCE WITH ARTICLE 420-3 OF THE STANDARD SPECIFICATIONS.

PROJECT NO. R-0609IA
GUILFORD COUNTY
STATION: 54+36.375 -L-

SHEET 1 OF 2

STATE OF NORTH CAROLINA
DEPARTMENT OF TRANSPORTATION
RALEIGH

SUPERSTRUCTURE
TYPICAL SECTION
(FLYOVER)

NORTH CAROLINA PROFESSIONAL SEAL 23926 ENGINEER BRIAN C. HANKS
11/9/06

REVISIONS						SHEET NO.
NO.	BY:	DATE:	NO.	BY:	DATE:	S-233
1			3			TOTAL SHEETS
2			4			321

DRAWN BY : D. G. ELY DATE : 1/14/05
CHECKED BY : K. W. ALFORD DATE : 3/30/05

09-NOV-2006 14:17
R:\Structures\frye\FINAL_PLANS\Str8\R0609IA_sd_TS_08.dgn
bhanks

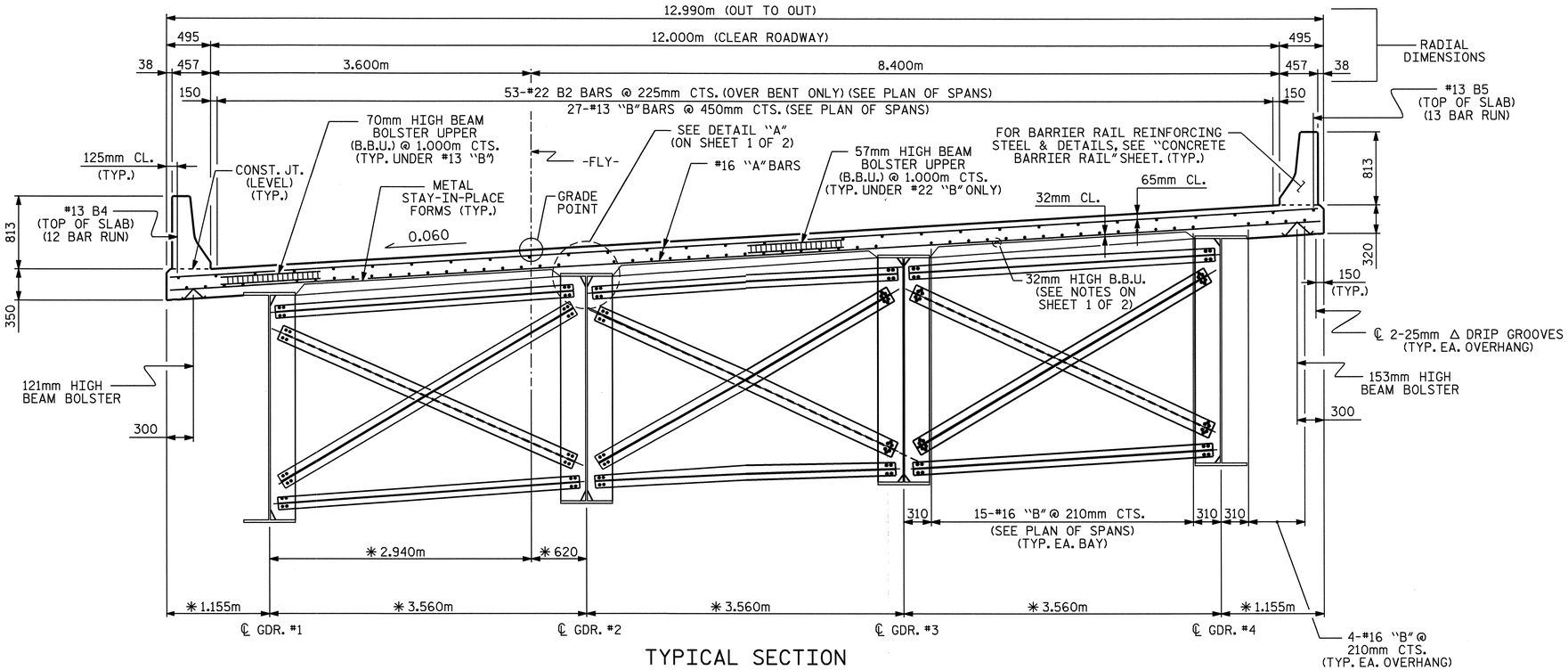

TYPICAL SECTION

(SHOWING BENT & INTERMEDIATE DIAPHRAGMS)
(✳ INDICATES RADIAL DIMENSION)

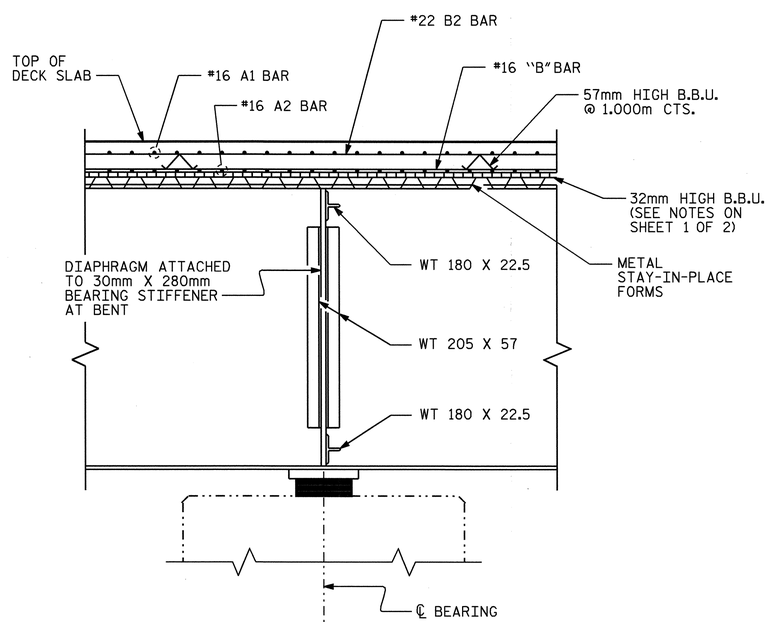

SECTION AT BENT

EXTERIOR GIRDER SHOWN

PROJECT NO. R-0609IA
GUILFORD COUNTY
STATION: 54+36.375 -L-

SHEET 2 OF 2

STATE OF NORTH CAROLINA
DEPARTMENT OF TRANSPORTATION
RALEIGH

SUPERSTRUCTURE
TYPICAL SECTION
(FLYOVER)

NORTH CAROLINA PROFESSIONAL SEAL 23926 ENGINEER BRIAN C. HANKS
5/22/06

REVISIONS						SHEET NO.
NO.	BY:	DATE:	NO.	BY:	DATE:	S-234
1			3			TOTAL SHEETS
2			4			321

DRAWN BY : D. G. ELY DATE : 1/14/05
CHECKED BY : K. W. ALFORD DATE : 3/30/05

15-MAY-2006 12:21
J:\STRUCT~1\frye\FINAL_~1\Str8\R0609IA_sd_TS_08.dgn
rwwright

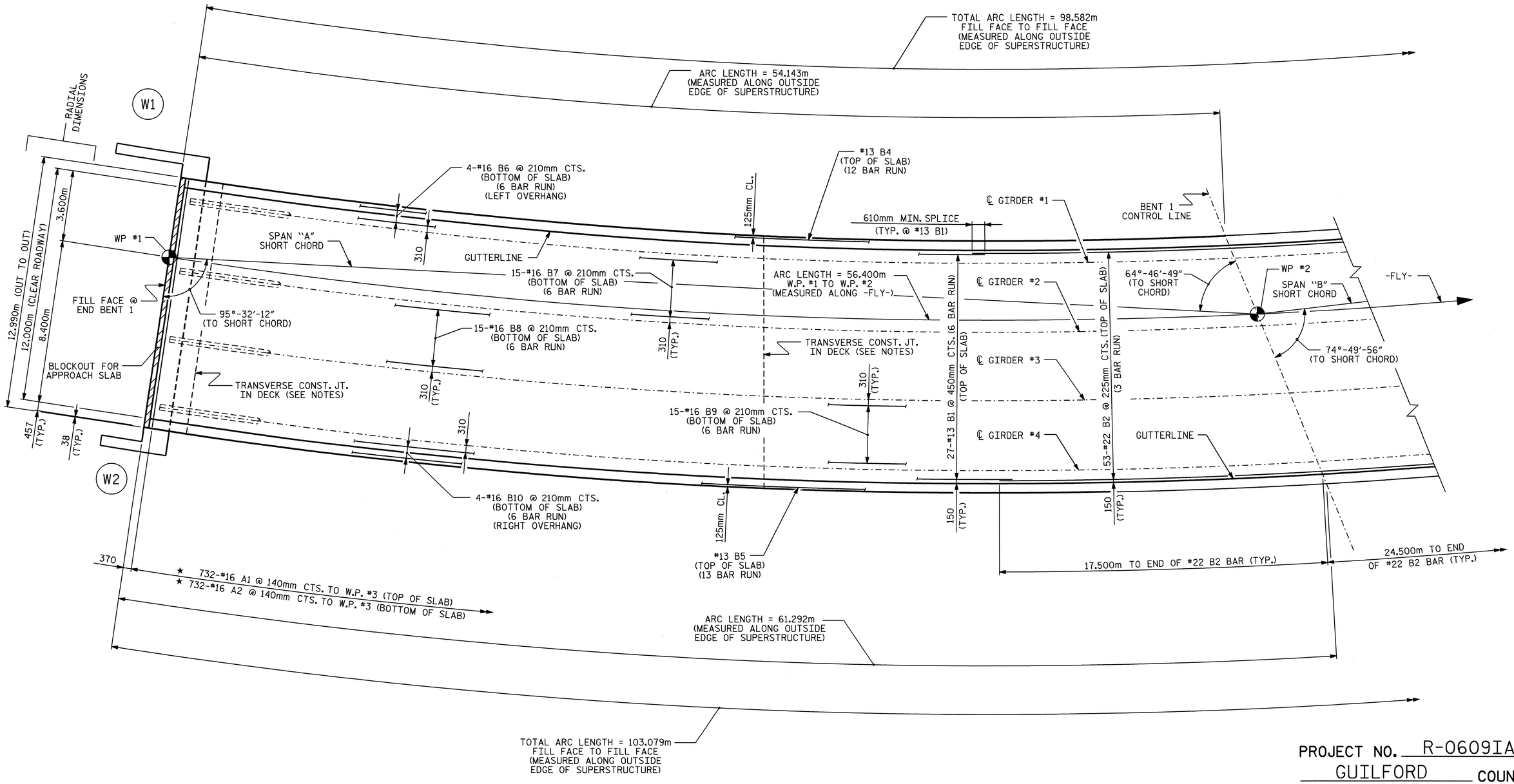

NOTES

FOR BARRIER RAIL REINFORCING STEEL AND DETAILS, SEE "CONCRETE BARRIER RAIL" SHEET.

FOR ABUTMENT REINFORCING STEEL, SEE "PLAN OF SPAN DETAILS" SHEETS.

★ #16 "A" BARS ARE TO BE PLACED RADIALLY ALONG RIGHT OUTSIDE EDGE OF SUPERSTRUCTURE.

FOR TRANSVERSE CONSTRUCTION JOINT DETAILS AND LOCATION, SEE "SUPERSTRUCTURE - BILL OF MATERIAL" SHEET.

PLAN OF SPAN "A"

PROJECT NO. R-0609IA
GUILFORD COUNTY
STATION: 54+36.375 -L-

SHEET 1 OF 5

STATE OF NORTH CAROLINA
DEPARTMENT OF TRANSPORTATION
RALEIGH

SUPERSTRUCTURE
PLAN OF SPANS
SPAN A
(FLYOVER)

NORTH CAROLINA PROFESSIONAL SEAL 23926 ENGINEER BRIAN C. HANKS
5/22/06

REVISIONS						SHEET NO.
NO.	BY:	DATE:	NO.	BY:	DATE:	S-235
1			3			TOTAL SHEETS
2			4			321

DRAWN BY : D. G. ELY DATE : 1/3/05
CHECKED BY : K. W. ALFORD DATE : 3/30/05

15-MAY-2006 12:20
J:\STRUCT~1\frye\FINAL_~1\Str8\R0609IA_sd_S*_08.dgn

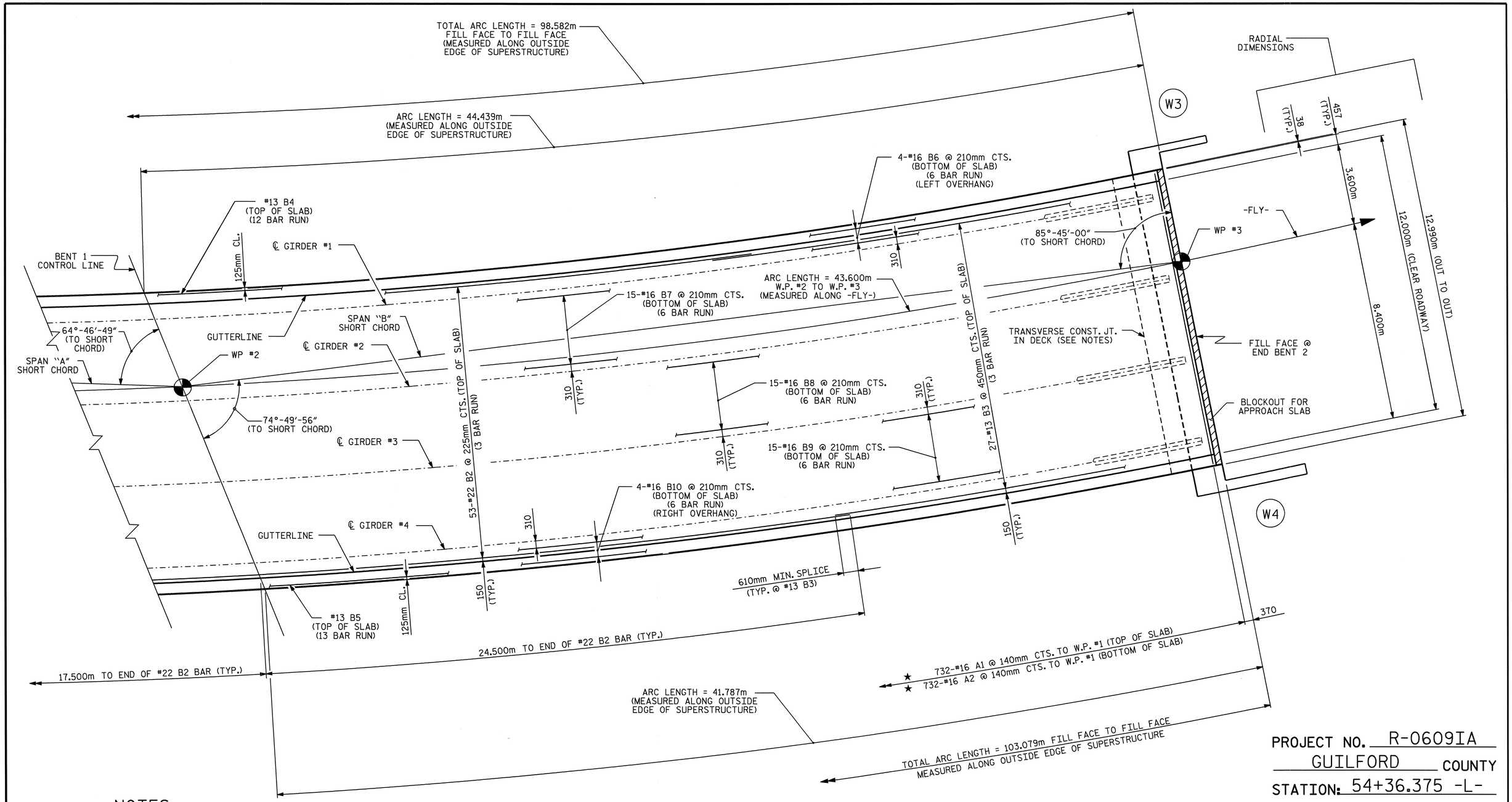

PROJECT NO. R-0609IA
GUILFORD COUNTY
STATION: 54+36.375 -L-

SHEET 2 OF 5

NOTES

FOR BARRIER RAIL REINFORCING STEEL AND DETAILS, SEE "CONCRETE BARRIER RAIL" SHEET.

FOR ABUTMENT REINFORCING STEEL, SEE "PLAN OF SPAN DETAILS" SHEETS.

★ #16 "A" BARS ARE TO BE PLACED RADIALLY ALONG RIGHT OUTSIDE EDGE OF SUPERSTRUCTURE.

FOR TRANSVERSE CONSTRUCTION JOINT DETAILS AND LOCATION, SEE "SUPERSTRUCTURE BILL OF MATERIAL" SHEET.

PLAN OF SPAN "B"

NORTH CAROLINA PROFESSIONAL SEAL 23926 ENGINEER BRIAN C. HANKS
5/22/06

STATE OF NORTH CAROLINA
DEPARTMENT OF TRANSPORTATION
RALEIGH

SUPERSTRUCTURE
PLAN OF SPANS
SPAN B
(FLYOVER)

REVISIONS						SHEET NO.
NO.	BY:	DATE:	NO.	BY:	DATE:	S-236
1			3			TOTAL SHEETS
2			4			321

DRAWN BY : D. G. ELY DATE : 1/3/05
CHECKED BY : K. W. ALFORD DATE : 4/5/05

15-MAY-2006 12:19
J:\STRUCT~1\frye\FINAL_~1\Str8\R0609IA_sd_S*_08.dgn
rwwright

STR. 8

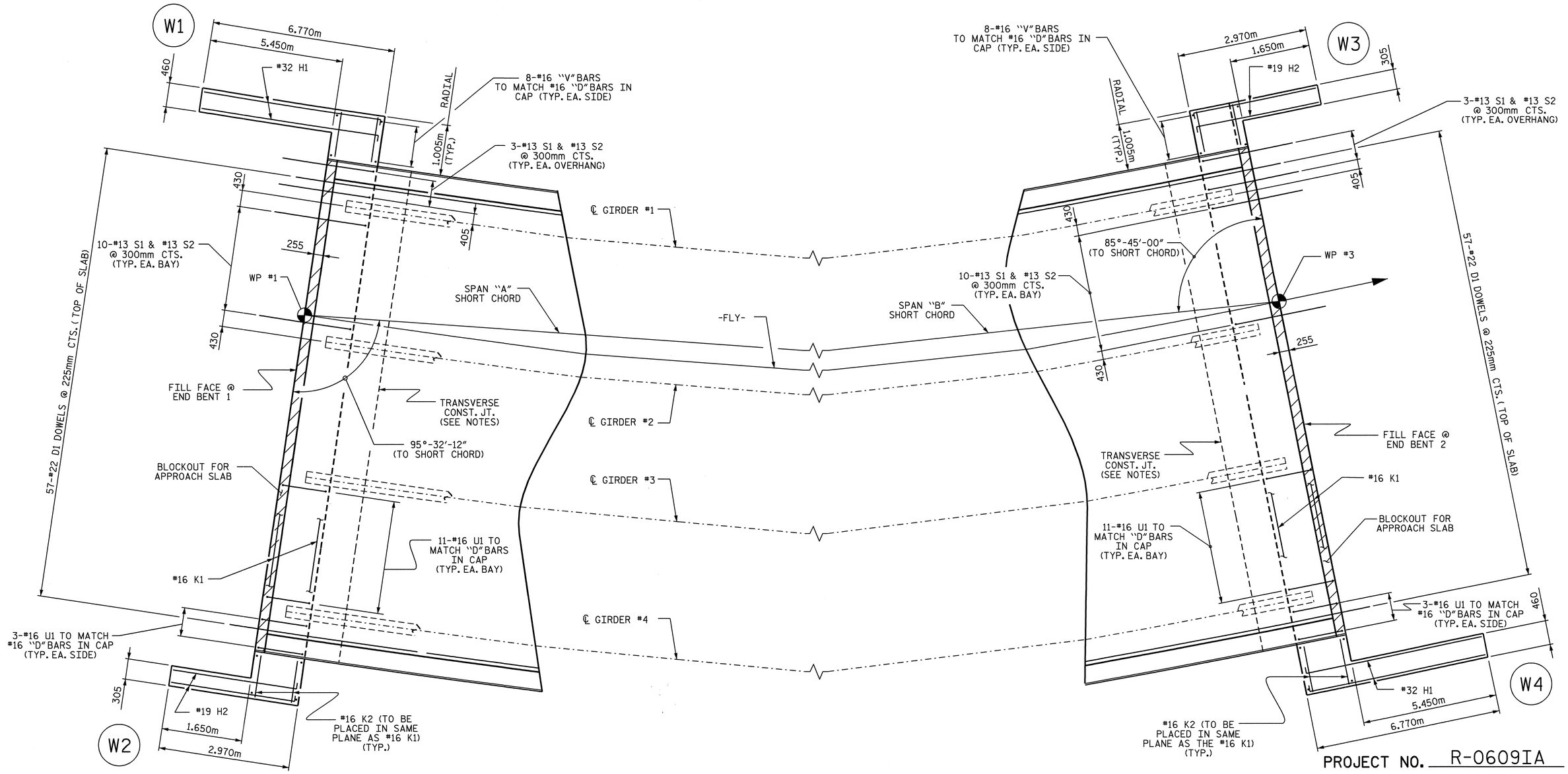

PROJECT NO. R-0609IA

GUILFORD COUNTY

STATION: 54+36.375 -L-

SHEET 3 OF 5

PLAN OF ABUTMENT WALL AT END BENT 1

PLAN OF ABUTMENT WALL AT END BENT 2

NOTES:

FOR SECTION THROUGH ABUTMENT, SEE "TYPICAL SECTION" SHEET 1 OF 2.

FOR TRANSVERSE CONSTRUCTION JOINT DETAILS AND LOCATION, SEE "SUPERSTRUCTURE - BILL OF MATERIAL" SHEET.

NORTH CAROLINA PROFESSIONAL SEAL 23926 ENGINEER BRIAN C. HANKS
11/9/06

STATE OF NORTH CAROLINA
DEPARTMENT OF TRANSPORTATION
RALEIGH

SUPERSTRUCTURE
PLAN OF SPANS
DETAILS
(FLYOVER)

REVISIONS						SHEET NO.
NO.	BY:	DATE:	NO.	BY:	DATE:	S-237
1			3			TOTAL SHEETS
2			4			321

DRAWN BY : D. G. ELY DATE : 3/17/05
CHECKED BY : K. W. ALFORD DATE : 4/6/05

09-NOV-2006 14:19
R:\Structures\frye\FINAL_PLANS\Str8\R0609IA_sd_S*_08.dgn
bhanks

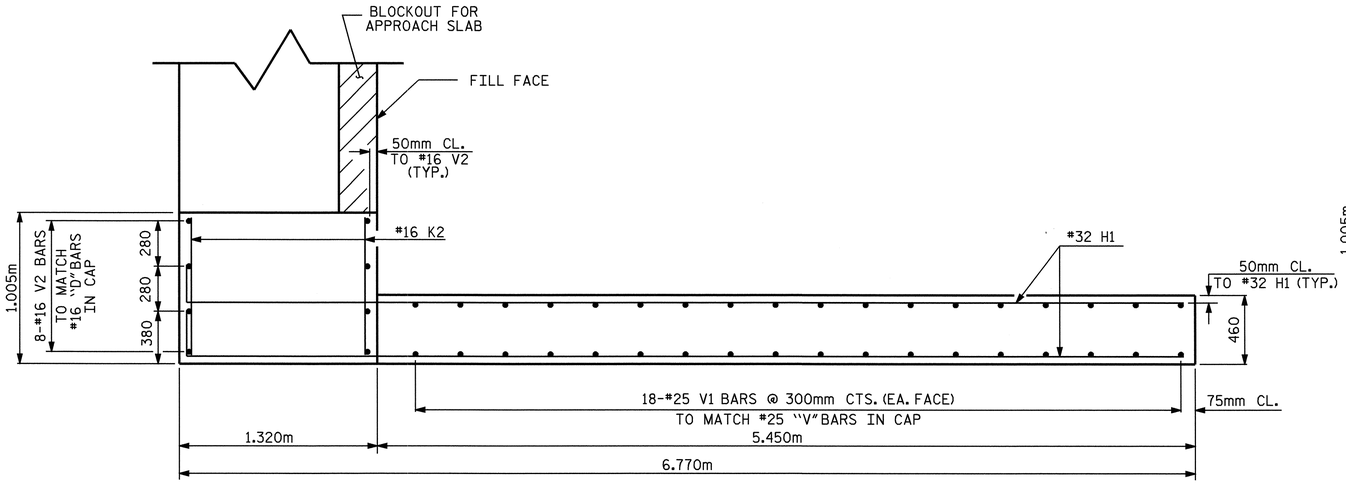

PLAN - W1

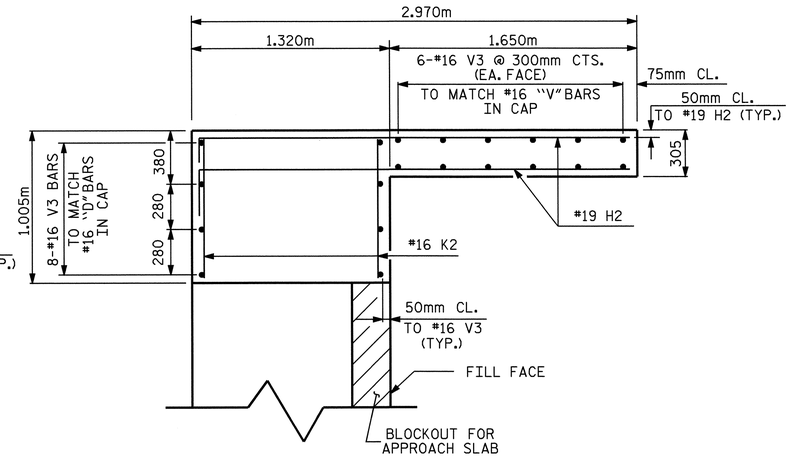

PLAN - W2

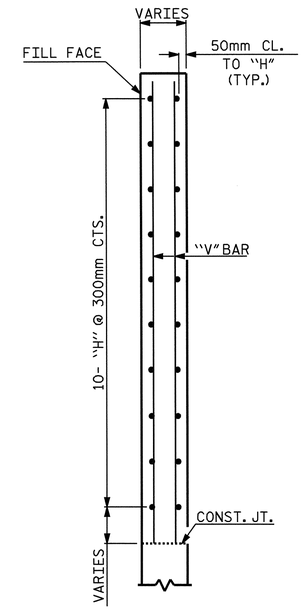

SECTION A-A

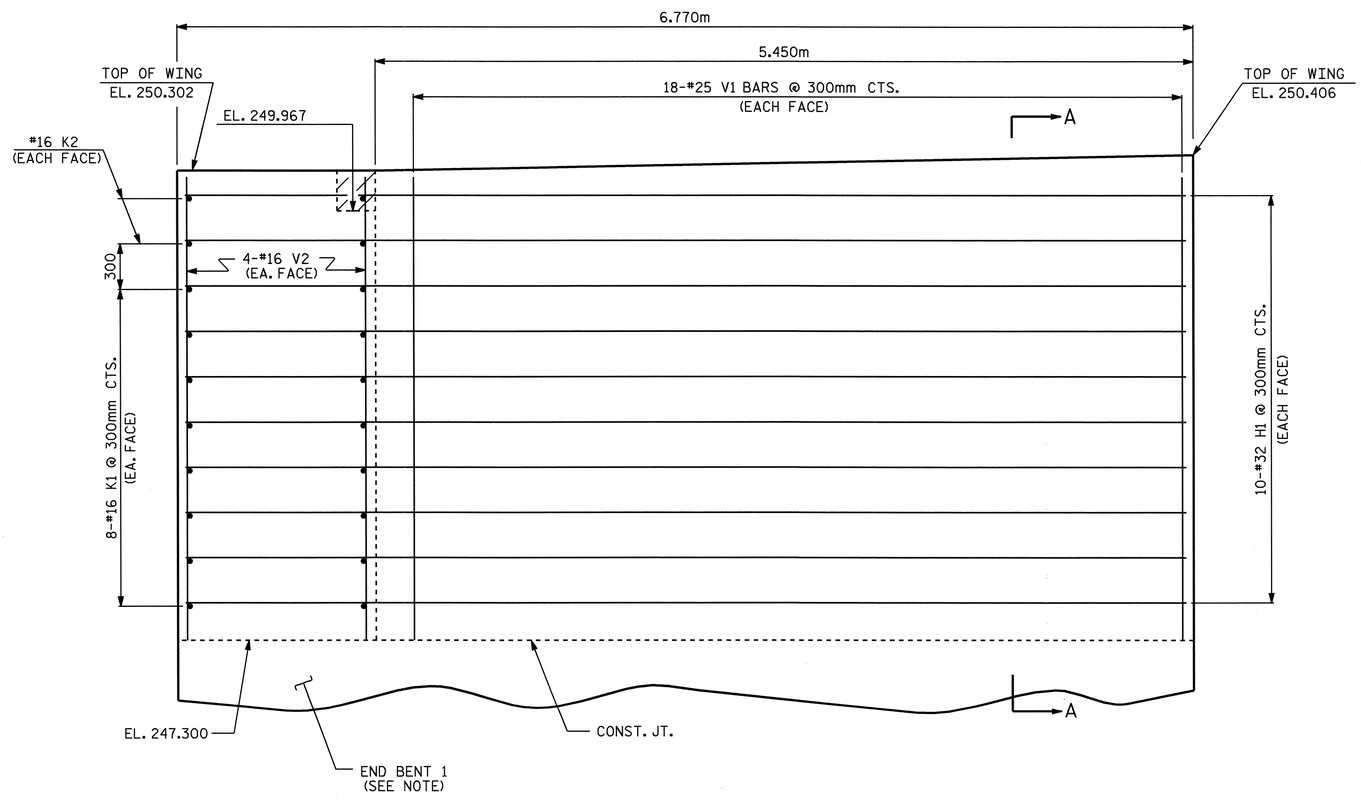

ELEVATION - W1

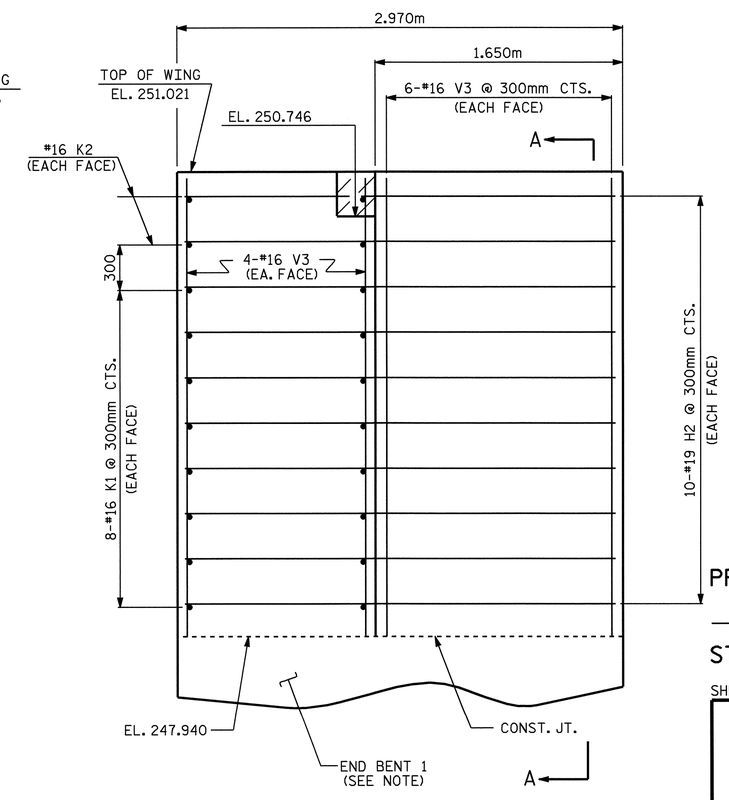

ELEVATION - W2

ABUTMENT WINGS @ END BENT 1

NOTE: FOR END BENT 1 REINFORCING STEEL AND DETAILS, SEE "SUBSTRUCTURE, END BENT 1" SHEETS.

NORTH CAROLINA PROFESSIONAL SEAL 23926 ENGINEER BRIAN C. HANKS
5/22/06

PROJECT NO. R-0609IA
GUILFORD COUNTY
STATION: 54+36.375 -L-

SHEET 4 OF 5

STATE OF NORTH CAROLINA
DEPARTMENT OF TRANSPORTATION
RALEIGH

SUPERSTRUCTURE
PLAN OF SPANS
DETAILS
(FLYOVER)

REVISIONS						SHEET NO.
NO.	BY:	DATE:	NO.	BY:	DATE:	S-238
1			3			TOTAL SHEETS
2			4			321

DRAWN BY : D. G. ELY DATE : 4/4/05
CHECKED BY : K. W. ALFORD DATE : 4/13/05

15-MAY-2006 12:18
J:\STRUCT~1\frye\FINAL_~1\Str8\R0609IA_sd_S*_08.dgn
rwwright

STR. #8

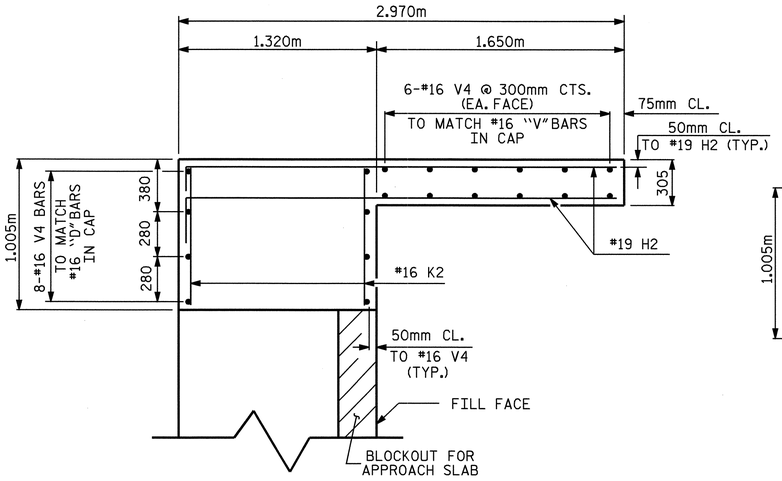

PLAN - W3

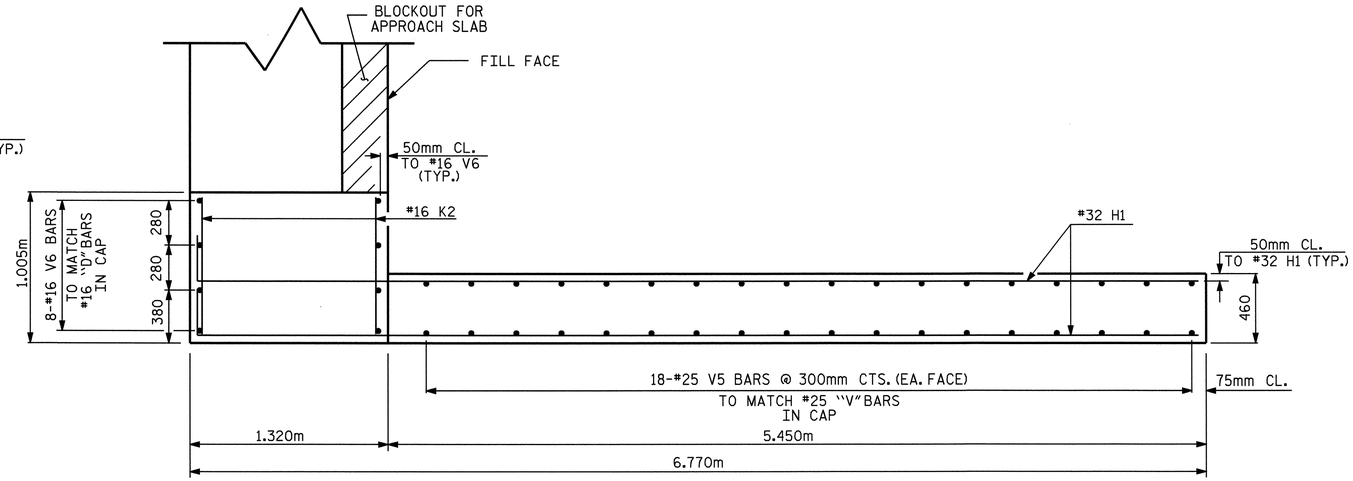

PLAN - W4

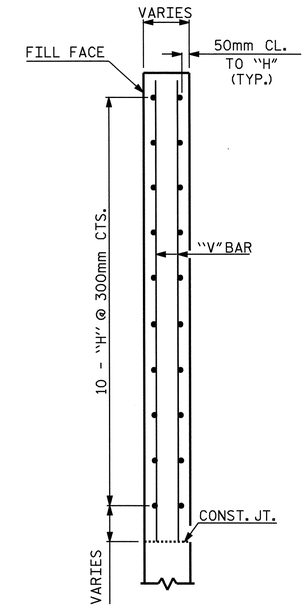

SECTION A-A

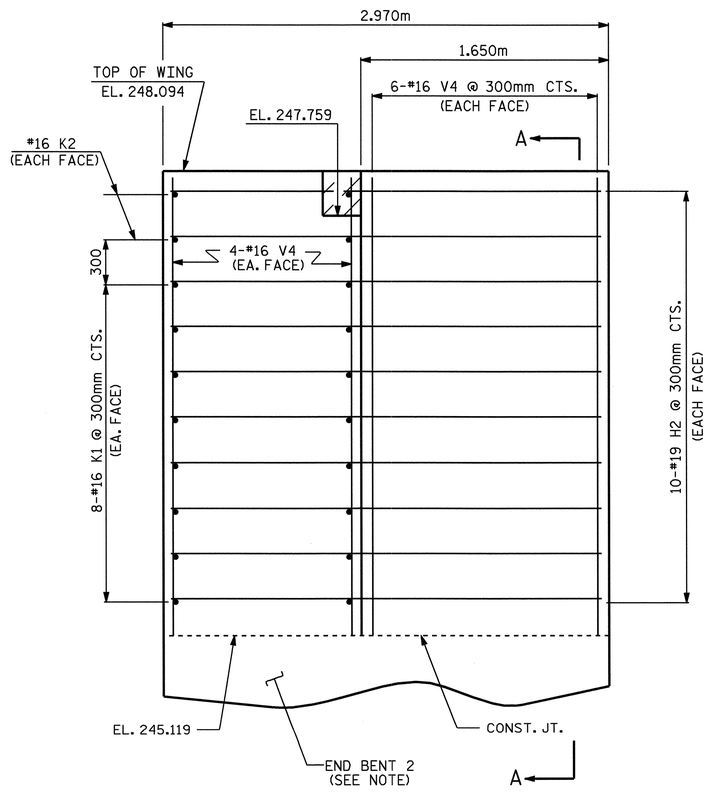

ELEVATION - W3

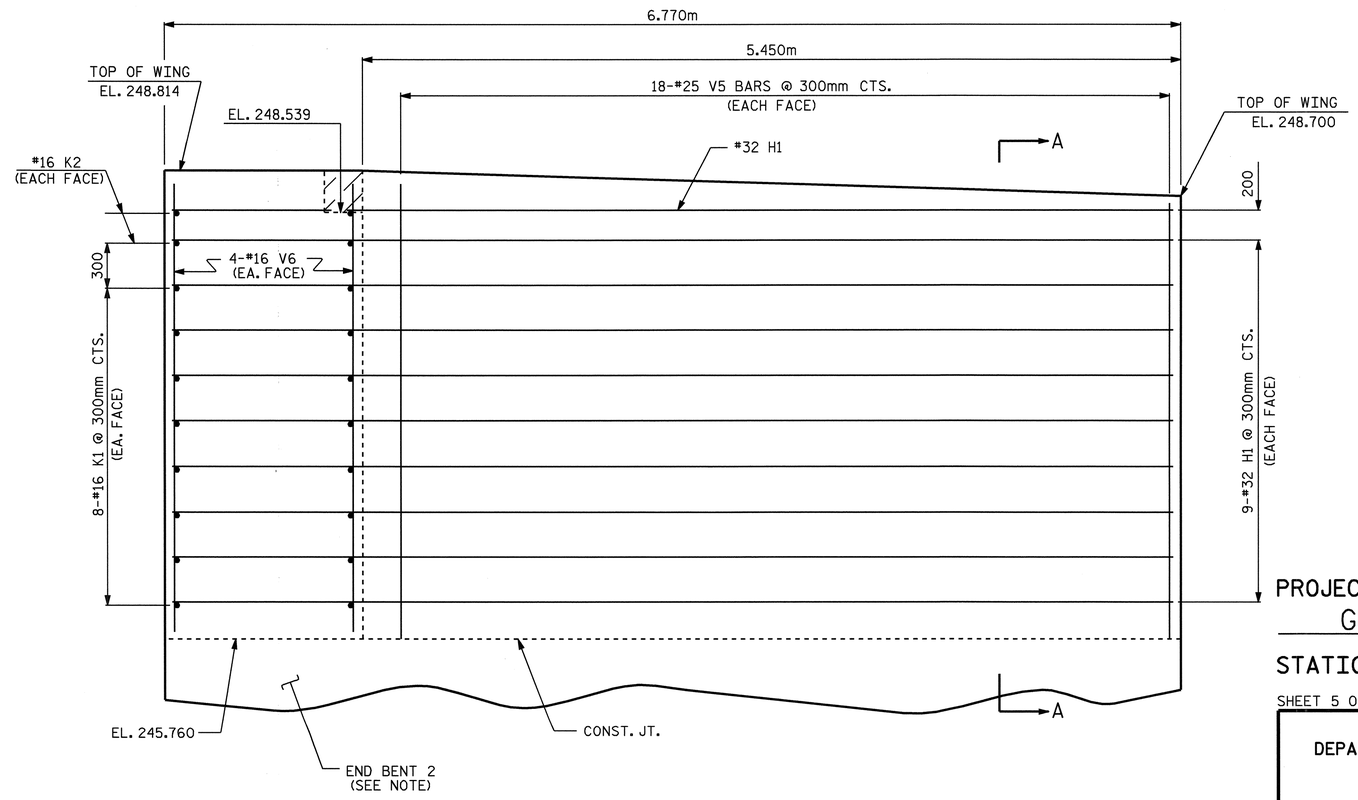

ELEVATION - W4

ABUTMENT WINGS @ END BENT 2

NOTE: FOR END BENT 2 REINFORCING STEEL AND DETAILS, SEE "SUBSTRUCTURE, END BENT 2" SHEETS.

PROJECT NO. R-0609IA
GUILFORD COUNTY
STATION: 54+36.375 -L-

SHEET 5 OF 5

STATE OF NORTH CAROLINA
DEPARTMENT OF TRANSPORTATION
RALEIGH

SUPERSTRUCTURE
PLAN OF SPANS
DETAILS
(FLYOVER)

NORTH CAROLINA PROFESSIONAL SEAL 23926 ENGINEER BRIAN C. HANKS
5/22/06

REVISIONS						SHEET NO.
NO.	BY:	DATE:	NO.	BY:	DATE:	S-239
1			3			TOTAL SHEETS
2			4			321

DRAWN BY : D. G. ELY DATE : 4/4/05
CHECKED BY : K. W. ALFORD DATE : 4/13/05

15-MAY-2006 12:18
J:\STRUCT~1\frye\FINAL_~1\Str8\R0609IA_sd_S#_08.dgn
rwwright

STR. #8

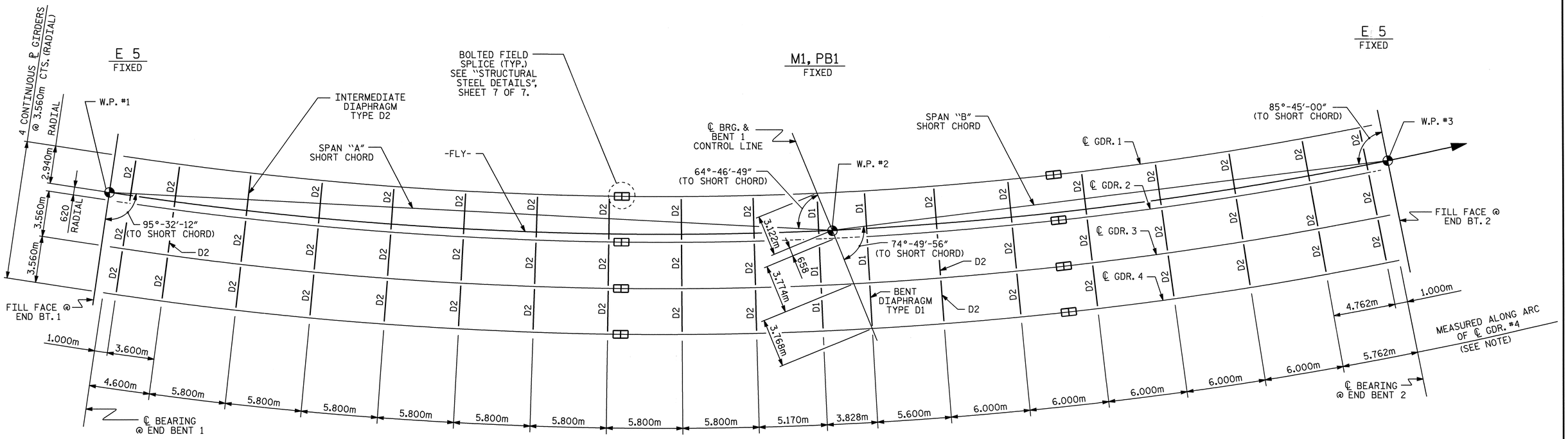

FRAMING PLAN

NOTE: ALL DIAPHRAGMS ARE TO BE PLACED RADIALLY TO ℄ GDR. #4.

PROJECT NO. R-0609IA
GUILFORD COUNTY
STATION: 54+36.375 -L-

STATE OF NORTH CAROLINA
DEPARTMENT OF TRANSPORTATION
RALEIGH

SUPERSTRUCTURE
FRAMING PLAN
(FLYOVER)

NORTH CAROLINA PROFESSIONAL SEAL 23926 ENGINEER BRIAN C. HANKS
B. C. Hanks
5/22/06

REVISIONS						SHEET NO.
NO.	BY:	DATE:	NO.	BY:	DATE:	S-240
1			3			TOTAL SHEETS
2			4			321

DRAWN BY : D. G. ELY DATE : 12/15/04
CHECKED BY : K. W. ALFORD DATE : 3/30/05

15-MAY-2006 12:16
J:\STRUCT~1\frye\FINAL_~1\Str8\R0609IA_sd_FP_08.dgn
rwwright

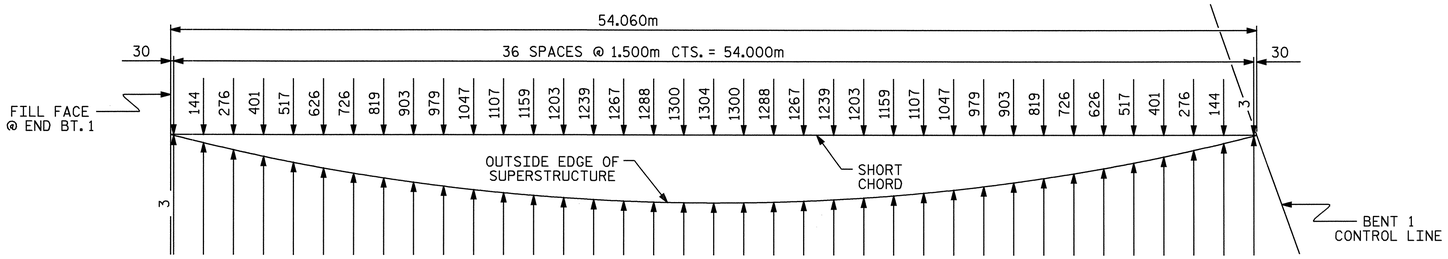

SPAN "A"- LEFT SIDE

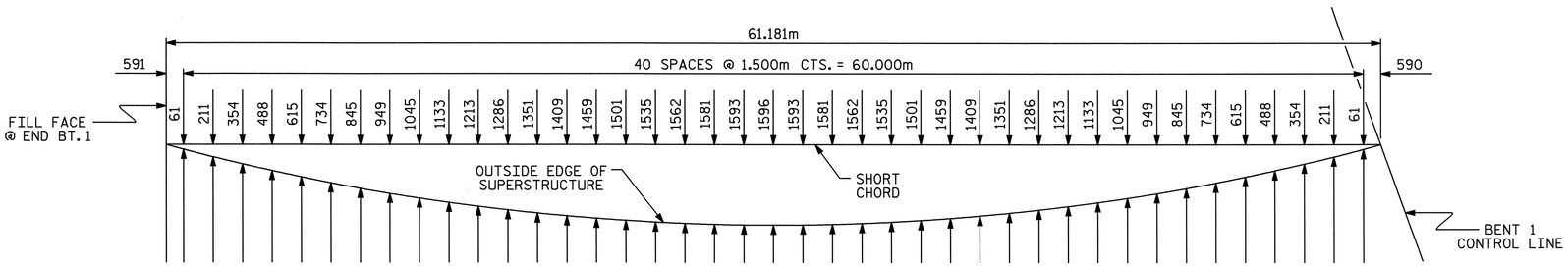

SPAN "A"- RIGHT SIDE

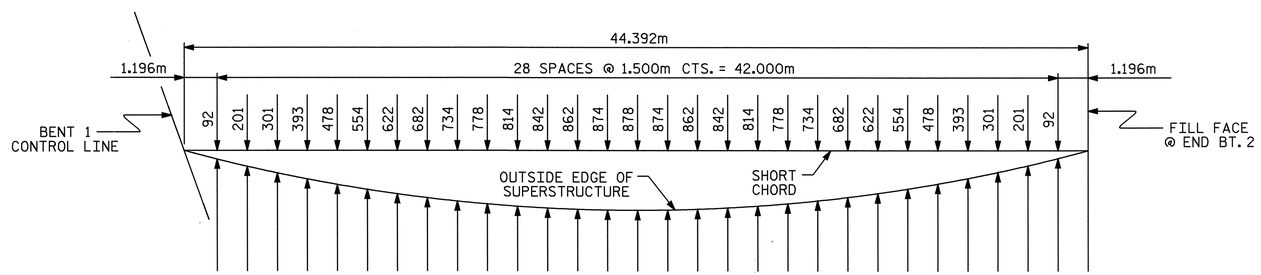

SPAN "B"- LEFT SIDE

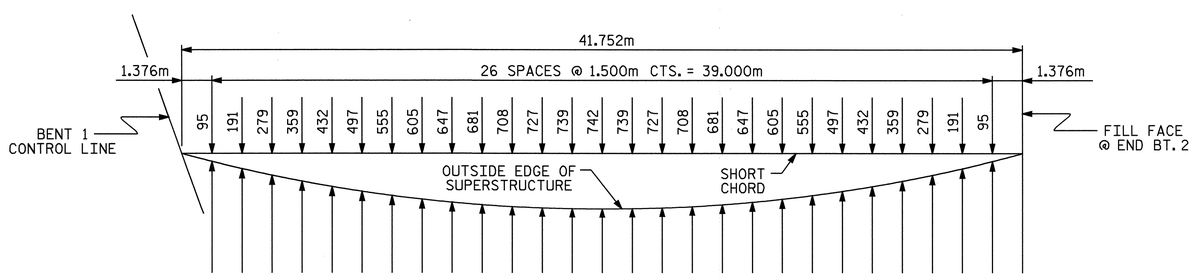

SPAN "B"- RIGHT SIDE

PROJECT NO. R-0609IA
GUILFORD COUNTY
STATION: 54+36.375 -L-

STATE OF NORTH CAROLINA
DEPARTMENT OF TRANSPORTATION
RALEIGH

SUPERSTRUCTURE
ARC OFFSETS
(FLYOVER)

NORTH CAROLINA PROFESSIONAL SEAL 23926 ENGINEER BRIAN C. HANKS
3/22/06

REVISIONS						SHEET NO.
NO.	BY:	DATE:	NO.	BY:	DATE:	S-241
1			3			TOTAL SHEETS
2			4			321

DRAWN BY : D. G. ELY DATE : 4/1/05
CHECKED BY : K. W. ALFORD DATE : 4/8/05

15-MAY-2006 12:16
J:\STRUCT~1\frye\FINAL_~1\Str8\R0609IA_sd_FP_08.dgn
rwwright

STR. #8

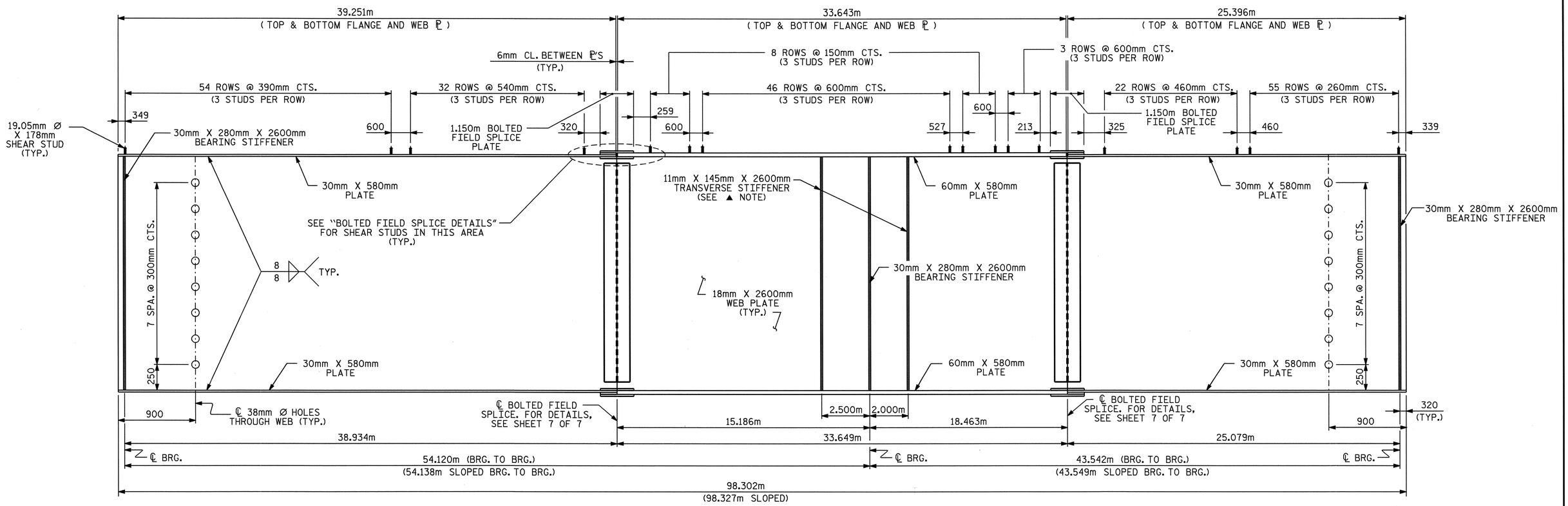

PLATE GIRDER 1 ELEVATION

▲ NOTE:

TRANSVERSE STIFFENERS ARE TO BE PLACE ON ONE SIDE OF GIRDERS ONLY. TRANSVERSE STIFFENERS ARE NOT TO BE PLACED ON THE OUTSIDE OF EXTERIOR GIRDERS.

PROJECT NO. R-0609IA
GUILFORD COUNTY
STATION: 54+36.375 -L-

SHEET 1 OF 7

STATE OF NORTH CAROLINA
DEPARTMENT OF TRANSPORTATION
RALEIGH

(SUPERSTRUCTURE)
STRUCTURAL STEEL DETAILS
(GIRDER 1)
(FLYOVER)

NORTH CAROLINA PROFESSIONAL SEAL 23926 ENGINEER BRIAN C. HAWKS
5/22/06

REVISIONS						SHEET NO.
NO.	BY:	DATE:	NO.	BY:	DATE:	S-242
1			3			TOTAL SHEETS
2			4			321

DRAWN BY : D. G. ELY DATE : 12/22/04
CHECKED BY : K. W. ALFORD DATE : 4/5/05

15-MAY-2006 12:14
J:\STRUCT~1\frye\FINAL_~1\Str8\R0609IA_sd_SS_08.dgn
rwwright

STR. 8

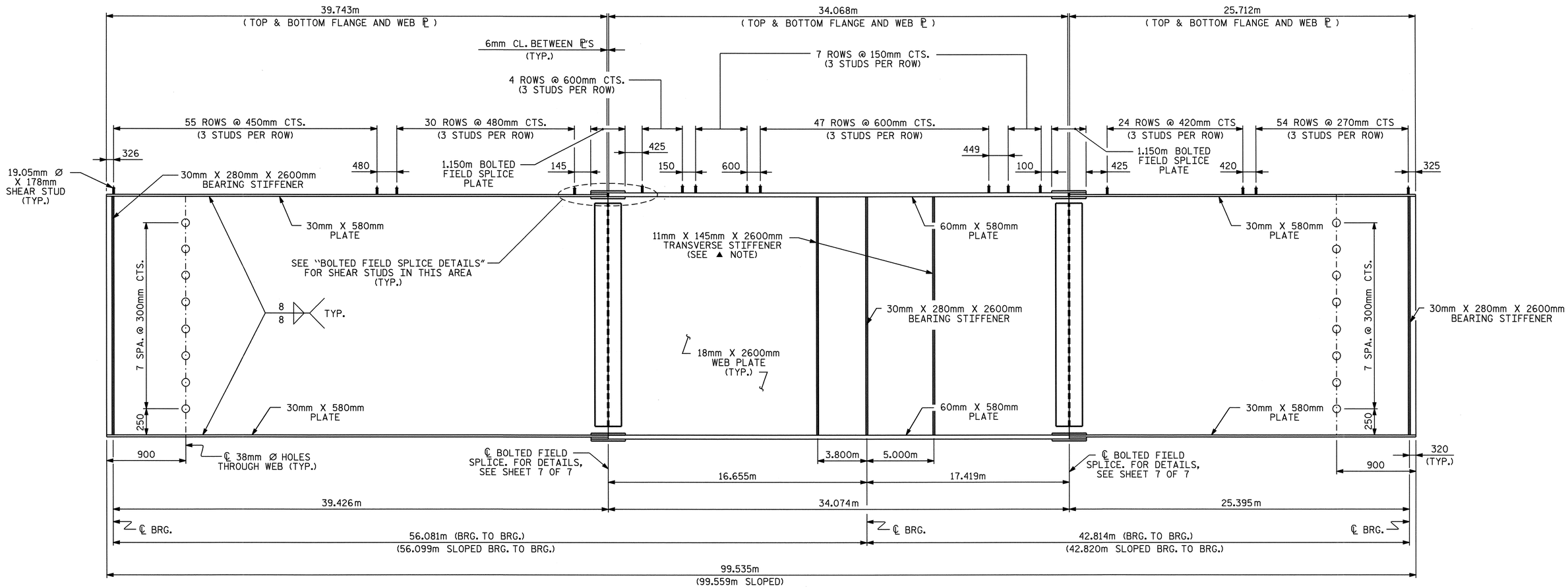

PLATE GIRDER 2 ELEVATION

▲ NOTE:

TRANSVERSE STIFFENERS ARE TO BE PLACE ON ONE SIDE OF GIRDERS ONLY. TRANSVERSE STIFFENERS ARE NOT TO BE PLACED ON THE OUTSIDE OF EXTERIOR GIRDERS.

PROJECT NO. R-0609IA
GUILFORD COUNTY
STATION: 54+36.375 -L-

SHEET 2 OF 7

STATE OF NORTH CAROLINA
DEPARTMENT OF TRANSPORTATION
RALEIGH

(SUPERSTRUCTURE)
STRUCTURAL STEEL DETAILS
(GIRDER 2)
(FLYOVER)

NORTH CAROLINA PROFESSIONAL SEAL 23926 ENGINEER BRIAN C. HANKS
5/22/06

REVISIONS						SHEET NO.
NO.	BY:	DATE:	NO.	BY:	DATE:	S-243
1			3			TOTAL SHEETS
2			4			321

DRAWN BY : D. G. ELY DATE : 12/22/04
CHECKED BY : K. W. ALFORD DATE : 4/5/05

15-MAY-2006 12:14
J:\STRUCT~1\frye\FINAL_~1\Str8\R0609IA_sd_SS_08.dgn
rwwright

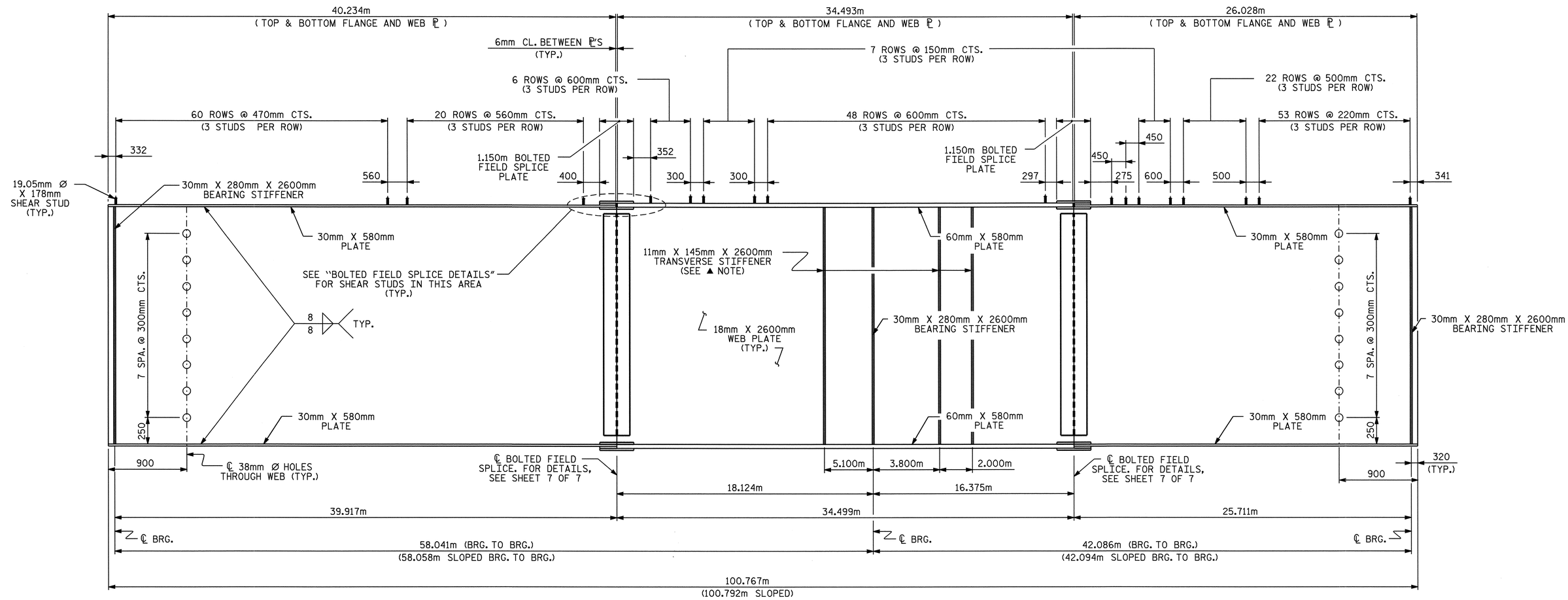

PLATE GIRDER 3 ELEVATION

▲ NOTE:

TRANSVERSE STIFFENERS ARE TO BE PLACE ON ONE SIDE OF GIRDERS ONLY. TRANSVERSE STIFFENERS ARE NOT TO BE PLACED ON THE OUTSIDE OF EXTERIOR GIRDERS.

PROJECT NO. R-0609IA
GUILFORD COUNTY
STATION: 54+36.375 -L-

SHEET 3 OF 7

STATE OF NORTH CAROLINA
DEPARTMENT OF TRANSPORTATION
RALEIGH

(SUPERSTRUCTURE)
STRUCTURAL STEEL DETAILS
(GIRDER 3)
(FLYOVER)

NORTH CAROLINA PROFESSIONAL SEAL 23926 ENGINEER BRIAN C. HANKS
5/22/06

REVISIONS						SHEET NO.
NO.	BY:	DATE:	NO.	BY:	DATE:	S-244
1			3			TOTAL SHEETS
2			4			321

DRAWN BY : D. G. ELY DATE : 12/22/04
CHECKED BY : K. W. ALFORD DATE : 4/5/05

15-MAY-2006 12:14
J:\STRUCT~1\frye\FINAL_~1\Str8\R0609IA_sd_SS_08.dgn
rwwright

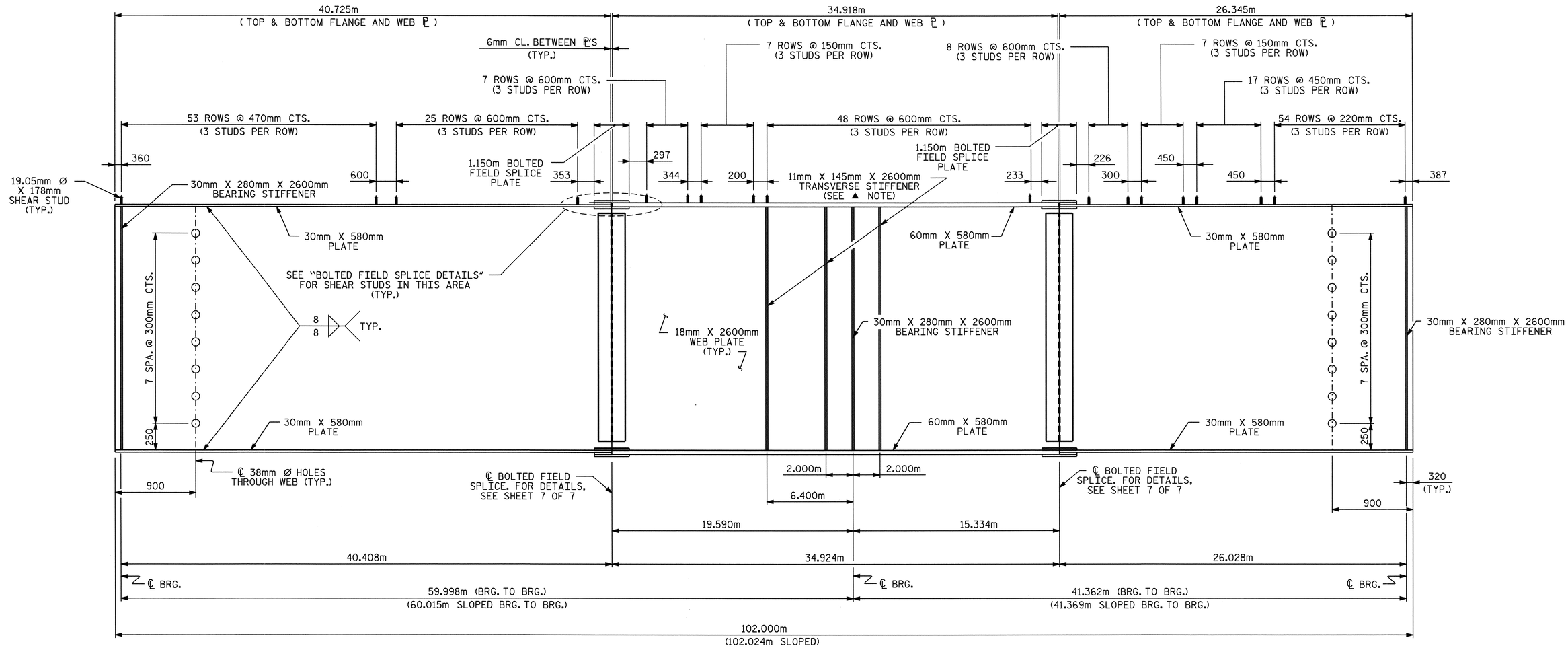

PLATE GIRDER 4 ELEVATION

▲ NOTE:

TRANSVERSE STIFFENERS ARE TO BE PLACE ON ONE SIDE OF GIRDERS ONLY. TRANSVERSE STIFFENERS ARE NOT TO BE PLACED ON THE OUTSIDE OF EXTERIOR GIRDERS.

PROJECT NO. R-0609IA
GUILFORD COUNTY
STATION: 54+36.375 -L-

SHEET 4 OF 7

STATE OF NORTH CAROLINA
DEPARTMENT OF TRANSPORTATION
RALEIGH

(SUPERSTRUCTURE)
STRUCTURAL STEEL DETAILS
(GIRDER 4)
(FLYOVER)

NORTH CAROLINA PROFESSIONAL SEAL 23926 ENGINEER BRIAN C. HANKS
5/22/06

REVISIONS							
NO.	BY:	DATE:	NO.	BY:	DATE:		
1			3				
2			4				

SHEET NO. S-245
TOTAL SHEETS 321

DRAWN BY : D. G. ELY DATE : 12/22/04
CHECKED BY : K. W. ALFORD DATE : 4/5/05

15-MAY-2006 12:13
J:\STRUCT~1\frye\FINAL_~1\Str8\R0609IA_sd_SS_08.dgn
rwwright

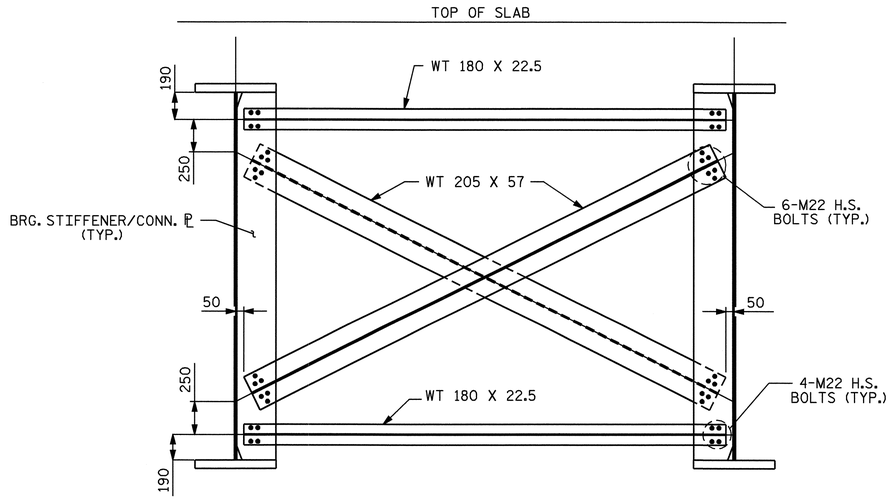

TYPICAL BENT DIAPHRAGM (TYPE D1)

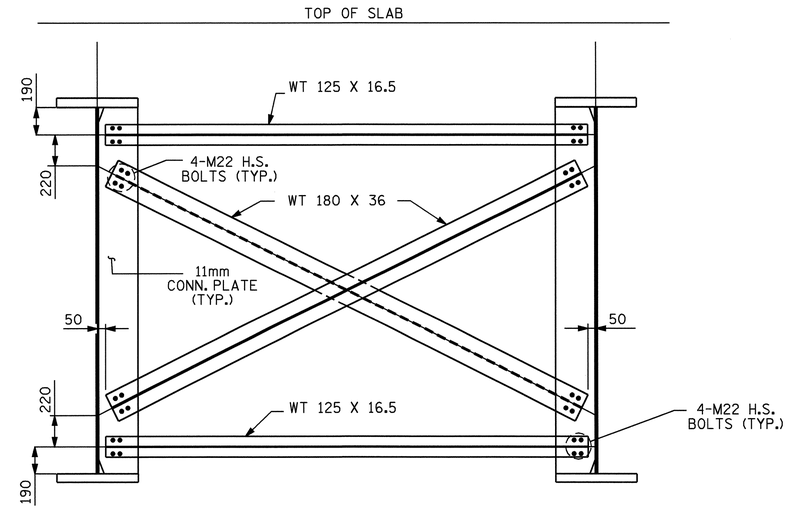

INTERMEDIATE DIAPHRAGM (TYPE D2)

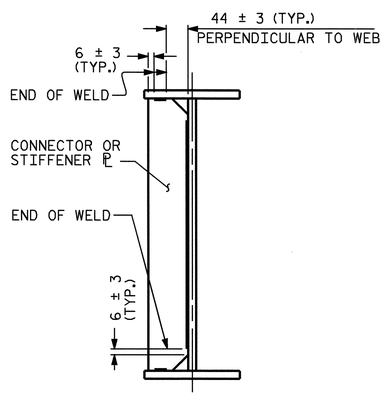

TYPICAL STIFFENER OR CONNECTOR PLATE CONNECTIONS

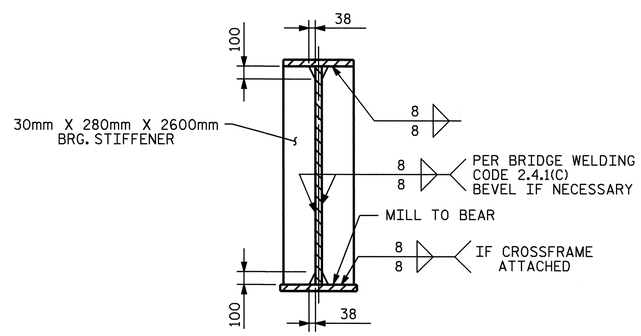

BEARING STIFFENER

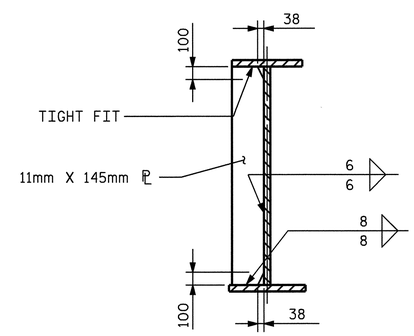

TRANSVERSE STIFFENER

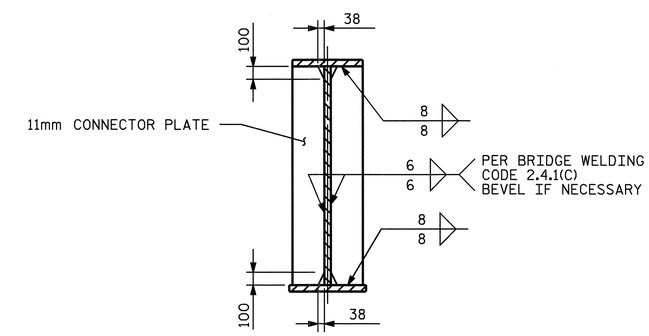

CONNECTOR PL

WELD TERMINATION DETAILS

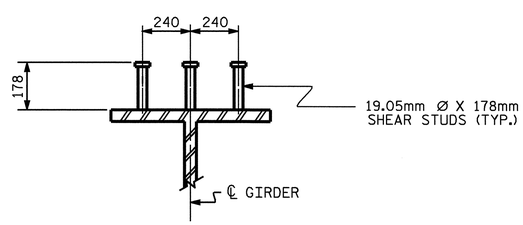

SHEAR STUD DETAILS
(TYP. EA. GDR.)

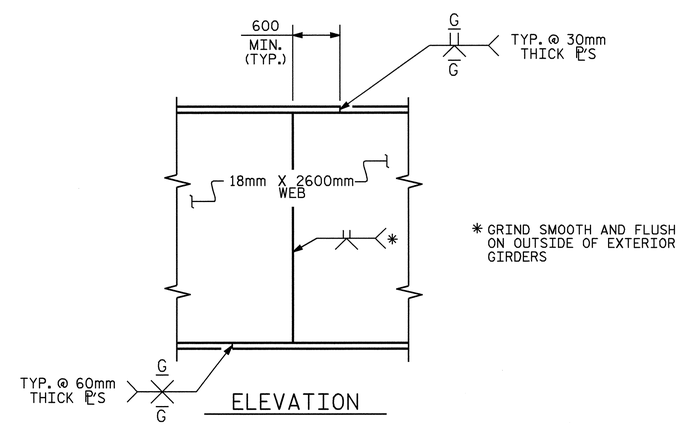

PERMISSIBLE SHOP FLANGE AND WEB SPLICE

PROJECT NO. R-0609IA
GUILFORD COUNTY
STATION: 54+36.375 -L-

SHEET 5 OF 7

STATE OF NORTH CAROLINA
DEPARTMENT OF TRANSPORTATION
RALEIGH

(SUPERSTRUCTURE)

STRUCTURAL STEEL DETAILS

(FLYOVER)

NORTH CAROLINA PROFESSIONAL SEAL 23926 ENGINEER BRIAN C. HAWKS
5/22/06

REVISIONS								SHEET NO.
NO.	BY:	DATE:	NO.	BY:	DATE:			S-246
1			3					TOTAL SHEETS
2			4					321

DRAWN BY : D. G. ELY DATE : 1/21/05
CHECKED BY : K. W. ALFORD DATE : 4/5/05

15-MAY-2006 12:15
J:\STRUCT~1\frye\FINAL_~1\str8\R0609IA_sd_SS_08.dgn

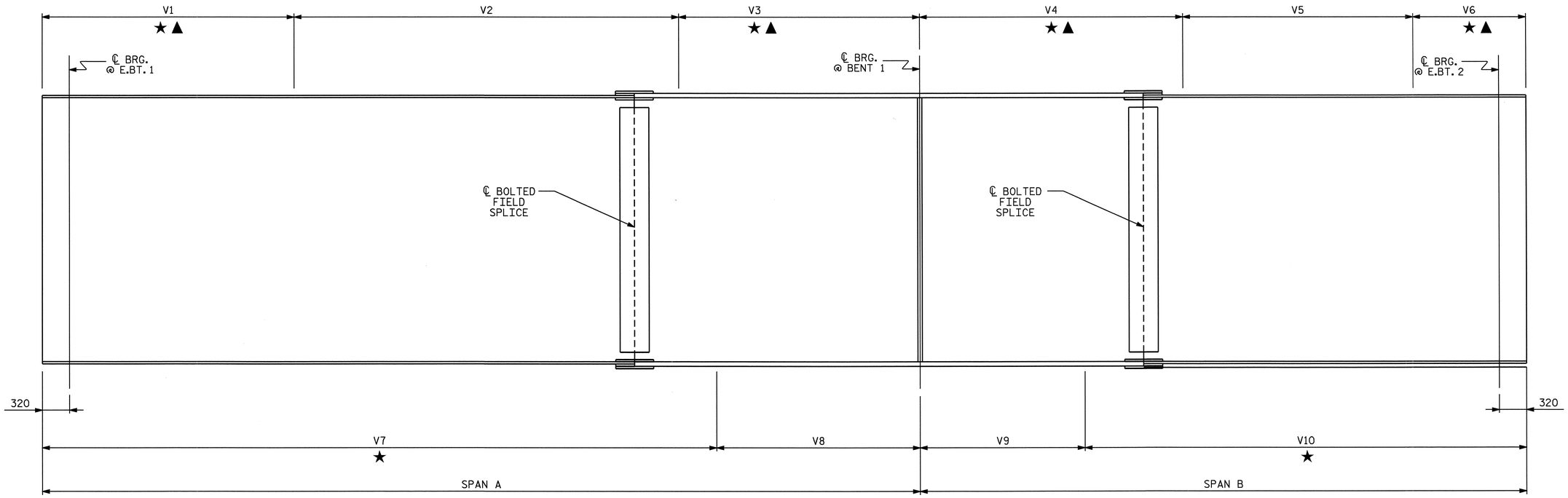

ELEVATION

(SEE TABLE BELOW)

TABLE FOR CHARPY V-NOTCH TEST FOR CONTINUOUS GIRDERS

GIRDER	RADIUS	SPAN A	SPAN B	V1	V2	V3	V4	V5	V6	V7	V8	V9	V10
1	282.060	54.440	43.862	5.180	33.660	15.600	18.400	17.382	8.080	43.880	10.560	11.782	32.080
2	285.620	56.401	43.134	5.180	36.221	15.000	19.700	15.354	8.080	45.780	10.621	11.954	31.180
3	289.180	58.361	42.406	5.180	38.181	15.000	22.000	12.326	8.080	47.380	10.981	12.926	29.480
4	292.740	60.318	41.682	5.180	38.938	16.200	23.500	10.102	8.080	48.680	11.638	13.802	27.880

CHARPY V-NOTCH TEST FOR CONTINUOUS PLATE GIRDERS

★ CHARPY V-NOTCH TESTS ARE REQUIRED FOR ALL TOP OR BOTTOM FLANGE PLATES WHICH FALL WITHIN THESE LIMITS. CHARPY V-NOTCH TESTS ARE REQUIRED FOR ALL WEB PLATES, ALL SPLICE PLATES, AND ALL CROSSFRAME COMPONENTS AND CONNECTOR PLATES. IF A PERMITTED SHOP FLANGE SPLICE IS NOT USED, CHARPY V-NOTCH TESTS WILL BE REQUIRED FOR THE ENTIRE FLANGE PLATE. FOR CHARPY V-NOTCH TESTS, SEE ARTICLE 1072-9 OF THE STANDARD SPECIFICATIONS, AND SPECIAL PROVISIONS.

▲ NO WELDING OF FORMS OR FALSEWORK TO THE TOP FLANGE WILL BE PERMITTED IN THIS REGION.

PROJECT NO. R-0609IA
GUILFORD COUNTY
STATION: 54+36.375 -L-

SHEET 6 OF 7

STATE OF NORTH CAROLINA
DEPARTMENT OF TRANSPORTATION
RALEIGH

(SUPERSTRUCTURE)
STRUCTURAL STEEL DETAILS
(FLYOVER)

NORTH CAROLINA PROFESSIONAL SEAL 23926 ENGINEER BRIAN C. HAWKS
5/22/06

REVISIONS						SHEET NO.
NO.	BY:	DATE:	NO.	BY:	DATE:	S-247
1			3			TOTAL SHEETS
2			4			321

DRAWN BY : D. G. ELY DATE : 1/14/05
CHECKED BY : K. W. ALFORD DATE : 4/6/05

15-MAY-2006 12:13
J:\STRUCT~1\frye\FINAL_~1\Str8\R0609IA_sd_SS_08.dgn
rwwright

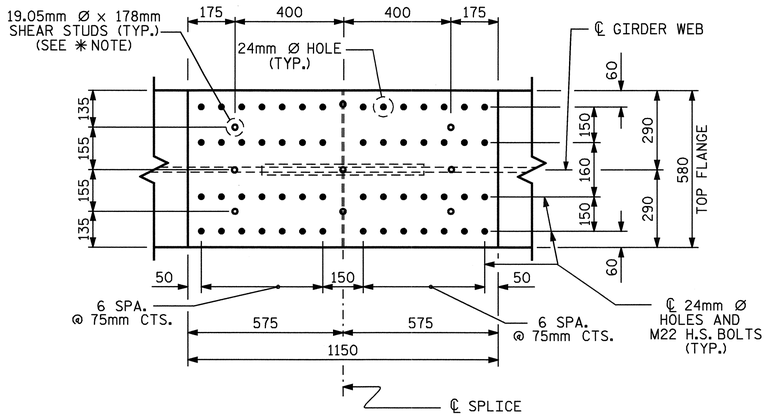

PLAN (TOP OF TOP FLANGE)

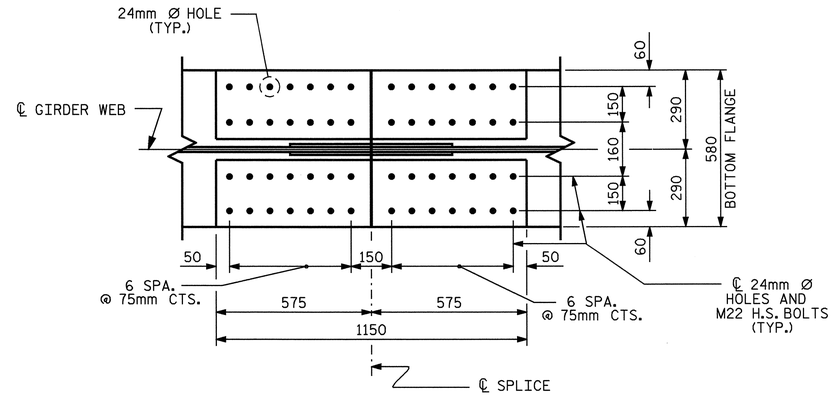

PLAN (TOP OF BOTTOM FLANGE)

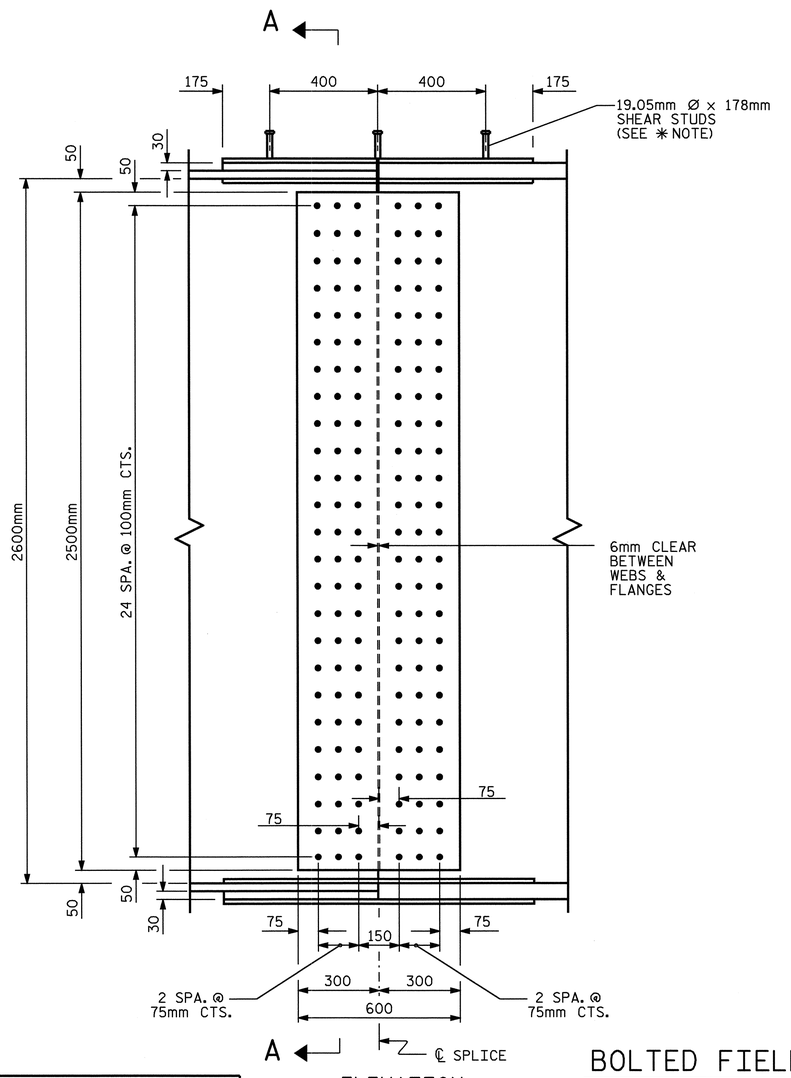

ELEVATION

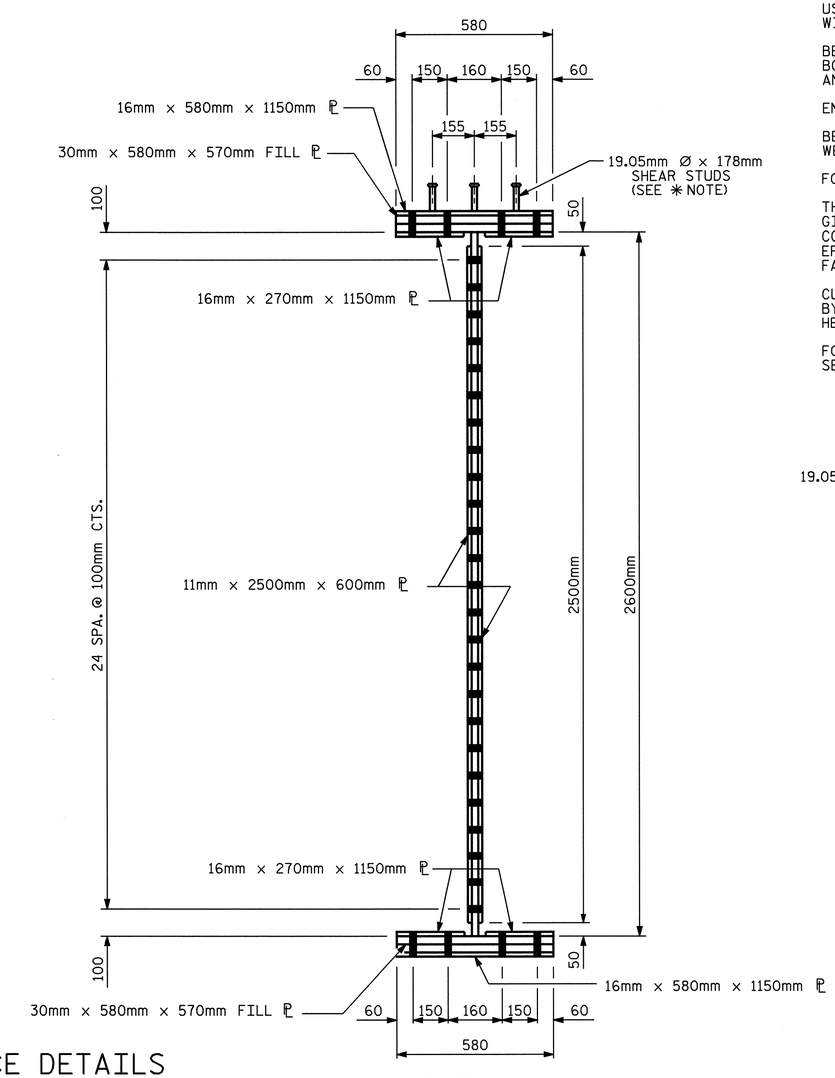

SECTION A-A

BOLTED FIELD SPLICE DETAILS

(TYPICAL EACH FIELD SPLICE)

NOTES :

ALL STRUCTURAL STEEL SHALL BE AASHTO M270 GRADE 345W AND PAINTED IN ACCORDANCE WITH SYSTEM 4 OF ARTICLE 442-7 OF THE STANDARD SPECIFICATIONS UNLESS OTHERWISE NOTED ON THE PLANS.

ALL DIMENSIONS SHOWN ARE HORIZONTAL OR VERTICAL, UNLESS OTHERWISE NOTED.

ALL FIELD CONNECTIONS TO BE 22.23mm HIGH STRENGTH BOLTS UNLESS OTHERWISE NOTED.

SHOP SPLICES ARE PERMITTED TO LIMIT THE MAXIMUM REQUIRED FLANGE PIECE LENGTHS TO 18 METERS AND WEB PIECE LENGTHS TO 14 METERS. PERMITTED FLANGE AND WEB SHOP SPLICES SHALL NOT BE LOCATED WITHIN 4.5 METERS OF MAXIMUM DEAD LOAD DEFLECTION (NOR WITHIN 4.5 METERS OF INTERMEDIATE BEARINGS OF CONTINUOUS UNITS). KEEP 600mm MINIMUM BETWEEN WEB AND FLANGE SHOP SPLICES. KEEP 150mm MINIMUM BETWEEN CONNECTOR PLATE OR TRANSVERSE STIFFENER WELDS AND WEB OR FLANGE SHOP SPLICES.

STUDS ON GIRDERS MAY BE SHIFTED UP TO 25mm IF NECESSARY TO CLEAR FLANGE SPLICE WELD.

✳ SHEAR STUDS ARE TO BE SHOP WELDED ON TOP OF PLATE BEFORE FIELD ASSEMBLY

A CHARPY V-NOTCH TEST IS REQUIRED, SEE SHEET 6 OF 7.

TENSION ON THE AASHTO M164 BOLTS SHALL BE CALIBRATED USING DIRECT TENSION INDICATOR WASHERS IN ACCORDANCE WITH ARTICLE 440-10 OF THE STANDARD SPECIFICATIONS.

BEARING STIFFENER MAY REQUIRE COPING IF WIDER THAN BOTTOM FLANGE TO AVOID INTERFERENCE WITH THE ANCHOR BOLT.

END OF GIRDERS SHALL BE PLUMB.

BEARING STIFFENERS ARE TO BE PLACED NORMAL TO THE WEB OF THE GIRDER AND SHALL BE PLUMB.

FOR CHARPY V-NOTCH TEST, SEE SPECIAL PROVISIONS.

THE CONTRACTOR SHALL MAINTAIN STABILITY OF THE CURVED GIRDERS UNTIL ALL FIELD SPLICES AND CROSSFRAME CONNECTIONS HAVE BEEN COMPLETED. STRUCTURAL STEEL ERECTION IN A CONTINUOUS UNIT SHALL BE COMPLETE BEFORE FALSEWORK OR FORMS ARE PLACED ON THE UNIT.

CURVATURE OF STEEL FLANGE PLATES MAY BE ACCOMPLISHED BY CUTTING PLATES TO THE REQUIRED CURVATURE OR BY HEAT TREATMENT.

FOR HEAT CURVING GIRDERS FOR BRIDGES AT STA. 54+36.375 -L-, SEE SPECIAL PROVISIONS.

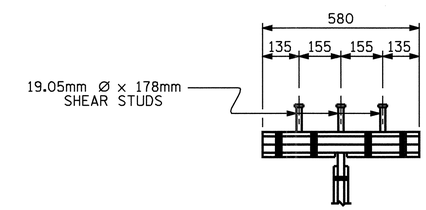

SHEAR STUD DETAIL
FOR TOP FLANGE SPLICE PLATE

PROJECT NO. R-0609IA
GUILFORD COUNTY
STATION: 54+36.375 -L-

SHEET 7 OF 7

STATE OF NORTH CAROLINA
DEPARTMENT OF TRANSPORTATION
RALEIGH

(SUPERSTRUCTURE)

STRUCTURAL STEEL DETAILS

(FLYOVER)

NORTH CAROLINA PROFESSIONAL SEAL 23926 ENGINEER BRIAN C. HANKS
5/22/06

REVISIONS								SHEET NO.
NO.	BY:	DATE:	NO.	BY:	DATE:			S-248
1			3					TOTAL SHEETS
2			4					321

DRAWN BY : D. G. ELY DATE : 12/14/04
CHECKED BY : K. W. ALFORD DATE : 4/6/05

15-MAY-2006 12:12
J:\STRUCT~1\frye\FINAL_~1\Str8\R0609IA_sd_SS_08.dgn
rwwright

STR. 8

NOTES

FOR ELASTOMERIC BEARINGS, SEE SPECIAL PROVISIONS.

TURN 90° TO ALLOW CONCRETE UNDER GIRDER.

— LOAD RATINGS —	
	MAX.D.L.+L.L.
TYPE VI	936 kN

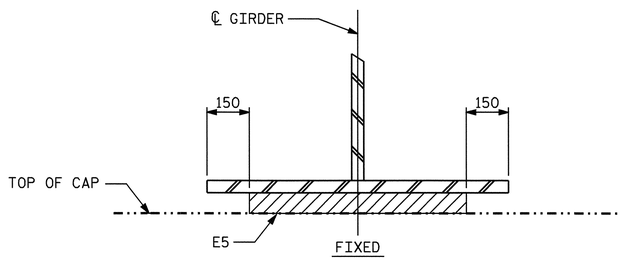

SECTION

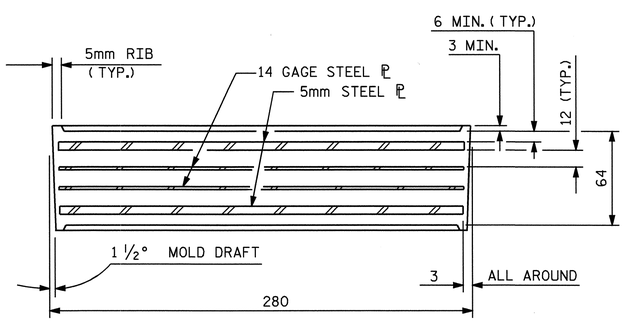

TYPICAL SECTION OF ELASTOMERIC BEARINGS

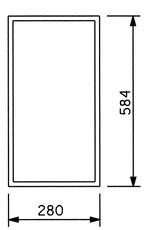

E5 (8 REQ'D)

PLAN VIEW OF ELASTOMERIC BEARING

TYPE VI

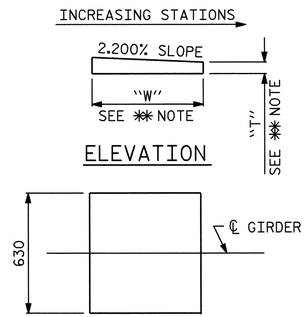

ELEVATION

PLAN

✱✱ NOTE:
DIMENSIONS "W" AND "T" ARE TO BE DETERMINED BY THE MANUFACTURER.

SOLE PLATE DETAILS

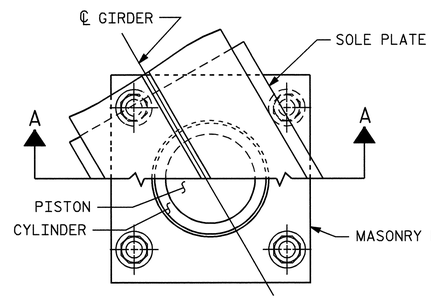

CUT-AWAY PLAN

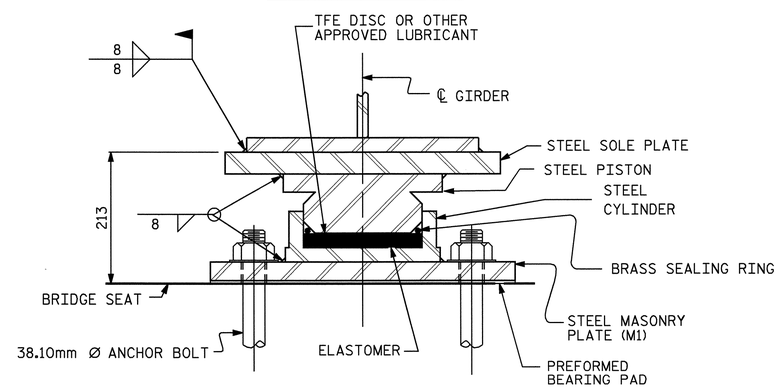

SECTION A-A

PB1, FIXED
(4 REQ'D.)

POT BEARING DETAILS

NOTES

FOR POT BEARINGS, SEE SPECIAL PROVISIONS.

AT ALL POINTS OF SUPPORT, NUTS FOR ANCHOR BOLTS SHALL BE TIGHTENED FINGER TIGHT AND GIVEN AN ADDITIONAL ¼ TURN. THE THREAD OF THE NUT AND BOLT SHALL THEN BE BURRED WITH A SHARP POINTED TOOL.

WHEN WELDING THE SOLE PLATE TO THE GIRDER, USE TEMPERATURE INDICATING WAX PENS, OR OTHER SUITABLE MEANS, TO ENSURE THAT THE TEMPERATURE OF THE BEARING DOES NOT EXCEED 121°C TEMPERATURES ABOVE THIS MAY DAMAGE THE TFE OR ELASTOMER.

ALL SURFACES OF BEARING PLATES SHALL BE SMOOTH AND STRAIGHT.

FOR THERMAL SPRAYED COATINGS (METALLIZATION), SEE SPECIAL PROVISIONS.

THE CONTRACTOR MAY SUBSTITUTE DISC BEARINGS FOR THE POT BEARINGS SHOWN. FOR OPTIONAL DISC BEARINGS, SEE SPECIAL PROVISIONS.

SOLE PLATES SHOULD BE WELDED TO THE GIRDER FLANGES BEFORE FALSEWORK IS PLACED.

TABLE FOR LOADS					
BEARING	LOCATION	VERTICAL LOAD (kN)			LATERAL LOAD (kN)
		DEAD	LIVE	TOTAL	
PB1 (FIXED)	BENT 1	2872	613	3485	841

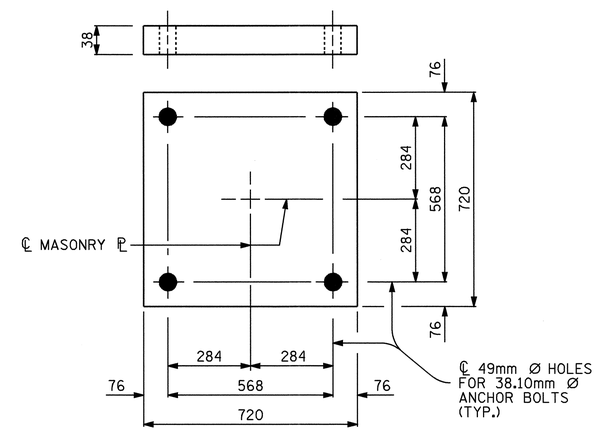

PLAN
M1 (4 REQ'D.)

MASONRY PLATE DETAILS

PROJECT NO. R-0609IA
GUILFORD COUNTY
STATION: 54+36.375 -L-

STATE OF NORTH CAROLINA
DEPARTMENT OF TRANSPORTATION
RALEIGH

SUPERSTRUCTURE

BEARING DETAILS

(FLYOVER)

NORTH CAROLINA PROFESSIONAL SEAL 23926 ENGINEER BRIAN C. HANKS
5/22/06

REVISIONS						
NO.	BY:	DATE:	NO.	BY:	DATE:	
1			3			
2			4			

SHEET NO. S-249
TOTAL SHEETS 321

DRAWN BY : D. G. ELY DATE : 3/24/05
CHECKED BY : K. W. ALFORD DATE : 4/6/05

15-MAY-2006 12:11
J:\STRUCT~1\frye\FINAL_~1\Str8\R0609IA_sd_BG_08.dgn
rwwright

STR. #8

DEAD LOAD DEFLECTION TABLE FOR GIRDERS

GIRDER #1

TWENTIETH POINTS	BRG.	.05	.10	.15	.20	.25	.30	.35	.40	.45	.50	.55	.60	.65	.70	.75	.80	.85	.90	.95	BRG.
	SPAN A																				
DEFLECTION DUE TO WEIGHT OF GIRDER	0.000	-0.003	-0.007	-0.010	-0.012	-0.015	-0.016	-0.018	-0.018	-0.018	-0.018	-0.017	-0.015	-0.014	-0.011	-0.009	-0.007	-0.005	-0.003	-0.001	0.000
DEFLECTION DUE TO WEIGHT OF SLAB ✳	0.000	-0.011	-0.019	-0.028	-0.037	-0.042	-0.048	-0.050	-0.053	-0.053	-0.051	-0.049	-0.045	-0.039	-0.034	-0.027	-0.021	-0.014	-0.008	-0.004	0.000
DEFLECTION DUE TO WEIGHT OF BARRIER RAIL	0.000	0.000	-0.001	-0.001	-0.001	-0.002	-0.002	-0.003	-0.003	-0.003	-0.003	-0.003	-0.003	-0.003	-0.002	-0.002	-0.001	-0.001	-0.001	0.000	0.000
TOTAL DEAD LOAD DEFLECTION	0.000	-0.014	-0.027	-0.039	-0.050	-0.059	-0.066	-0.071	-0.074	-0.074	-0.072	-0.069	-0.063	-0.056	-0.047	-0.038	-0.029	-0.020	-0.012	-0.005	0.000
VERTICAL CURVE ORDINATE	0.000	0.006	0.011	0.015	0.018	0.021	0.023	0.023	0.023	0.022	0.021	0.019	0.017	0.015	0.012	0.010	0.008	0.006	0.004	0.002	0.000
REQUIRED CAMBER	0	20	38	54	68	80	89	94	97	96	93	88	80	71	59	48	37	26	16	7	0

TWENTIETH POINTS	.05	.10	.15	.20	.25	.30	.35	.40	.45	.50	.55	.60	.65	.70	.75	.80	.85	.90	.95	BRG.
	SPAN B																			
DEFLECTION DUE TO WEIGHT OF GIRDER	0.000	0.001	0.000	0.000	-0.001	-0.001	-0.002	-0.002	-0.003	-0.004	-0.004	-0.004	-0.004	-0.004	-0.004	-0.003	-0.003	-0.002	-0.001	0.000
DEFLECTION DUE TO WEIGHT OF SLAB ✳	0.002	0.002	0.002	0.001	0.000	-0.002	-0.002	-0.005	-0.006	-0.007	-0.009	-0.010	-0.010	-0.010	-0.009	-0.008	-0.007	-0.005	-0.003	0.000
DEFLECTION DUE TO WEIGHT OF BARRIER RAIL	0.000	0.000	0.000	0.000	0.000	0.000	-0.001	-0.001	-0.001	-0.001	-0.001	-0.001	-0.001	-0.001	-0.001	-0.001	0.000	0.000	0.000	0.000
TOTAL DEAD LOAD DEFLECTION	0.002	0.003	0.002	0.001	-0.001	-0.003	-0.005	-0.008	-0.010	-0.012	-0.014	-0.015	-0.015	-0.015	-0.014	-0.012	-0.010	-0.007	-0.004	0.000
VERTICAL CURVE ORDINATE	0.000	0.000	0.000	0.000	0.000	0.000	0.000	0.000	0.000	0.000	0.000	0.000	0.000	0.000	0.000	0.000	0.000	0.000	0.000	0.000
REQUIRED CAMBER	-2	-3	-2	-1	1	3	5	8	10	12	14	15	15	15	14	12	10	7	4	0

GIRDER #2

TWENTIETH POINTS	BRG.	.05	.10	.15	.20	.25	.30	.35	.40	.45	.50	.55	.60	.65	.70	.75	.80	.85	.90	.95	BRG.
	SPAN A																				
DEFLECTION DUE TO WEIGHT OF GIRDER	0.000	-0.005	-0.010	-0.014	-0.018	-0.021	-0.023	-0.025	-0.026	-0.026	-0.026	-0.025	-0.023	-0.020	-0.017	-0.014	-0.011	-0.008	-0.005	-0.002	0.000
DEFLECTION DUE TO WEIGHT OF SLAB ✳	0.000	-0.014	-0.027	-0.041	-0.051	-0.061	-0.068	-0.074	-0.076	-0.077	-0.074	-0.070	-0.064	-0.058	-0.049	-0.040	-0.030	-0.021	-0.012	-0.006	0.000
DEFLECTION DUE TO WEIGHT OF BARRIER RAIL	0.000	0.000	-0.001	-0.001	-0.002	-0.002	-0.003	-0.003	-0.004	-0.004	-0.004	-0.004	-0.004	-0.003	-0.003	-0.002	-0.002	-0.001	-0.001	0.000	0.000
TOTAL DEAD LOAD DEFLECTION	0.000	-0.019	-0.038	-0.056	-0.071	-0.084	-0.094	-0.102	-0.106	-0.107	-0.104	-0.099	-0.091	-0.081	-0.069	-0.056	-0.043	-0.030	-0.018	-0.008	0.000
VERTICAL CURVE ORDINATE	0.000	0.006	0.011	0.016	0.019	0.021	0.023	0.024	0.024	0.023	0.021	0.019	0.017	0.015	0.012	0.010	0.008	0.006	0.004	0.002	0.000
REQUIRED CAMBER	0	25	49	72	90	105	117	126	130	130	125	118	108	96	81	66	51	36	22	10	0

TWENTIETH POINTS	.05	.10	.15	.20	.25	.30	.35	.40	.45	.50	.55	.60	.65	.70	.75	.80	.85	.90	.95	BRG.
	SPAN B																			
DEFLECTION DUE TO WEIGHT OF GIRDER	0.001	0.001	0.002	0.001	0.001	0.001	0.000	0.000	-0.001	-0.002	-0.002	-0.002	-0.002	-0.003	-0.002	-0.002	-0.002	-0.001	-0.001	0.000
DEFLECTION DUE TO WEIGHT OF SLAB ✳	0.003	0.005	0.004	0.005	0.004	0.002	0.001	-0.001	-0.001	-0.002	-0.004	-0.005	-0.006	-0.005	-0.006	-0.006	-0.005	-0.004	-0.002	0.000
DEFLECTION DUE TO WEIGHT OF BARRIER RAIL	0.000	0.000	0.000	0.000	0.000	0.000	0.000	0.000	-0.001	-0.001	-0.001	-0.001	-0.001	-0.001	-0.001	0.000	0.000	0.000	0.000	0.000
TOTAL DEAD LOAD DEFLECTION	0.004	0.006	0.006	0.006	0.005	0.003	0.001	-0.001	-0.003	-0.005	-0.007	-0.008	-0.009	-0.009	-0.009	-0.008	-0.007	-0.005	-0.003	0.000
VERTICAL CURVE ORDINATE	0.000	0.000	0.000	0.000	0.000	0.000	0.000	0.000	0.000	0.000	0.000	0.000	0.000	0.000	0.000	0.000	0.000	0.000	0.000	0.000
REQUIRED CAMBER	-4	-6	-6	-6	-5	-3	-1	1	3	5	7	8	9	9	9	8	7	5	3	0

GIRDER #3

TWENTIETH POINTS	BRG.	.05	.10	.15	.20	.25	.30	.35	.40	.45	.50	.55	.60	.65	.70	.75	.80	.85	.90	.95	BRG.
	SPAN A																				
DEFLECTION DUE TO WEIGHT OF GIRDER	0.000	-0.006	-0.013	-0.018	-0.023	-0.027	-0.031	-0.033	-0.034	-0.035	-0.034	-0.032	-0.030	-0.026	-0.022	-0.018	-0.014	-0.010	-0.006	-0.003	0.000
DEFLECTION DUE TO WEIGHT OF SLAB ✳	0.000	-0.019	-0.036	-0.052	-0.067	-0.080	-0.088	-0.095	-0.099	-0.099	-0.097	-0.092	-0.084	-0.075	-0.064	-0.052	-0.040	-0.028	-0.017	-0.008	0.000
DEFLECTION DUE TO WEIGHT OF BARRIER RAIL	0.000	0.000	-0.001	-0.002	-0.002	-0.003	-0.004	-0.004	-0.005	-0.005	-0.005	-0.005	-0.005	-0.004	-0.004	-0.003	-0.002	-0.002	-0.001	0.000	0.000
TOTAL DEAD LOAD DEFLECTION	0.000	-0.025	-0.050	-0.072	-0.092	-0.110	-0.123	-0.132	-0.138	-0.139	-0.136	-0.129	-0.119	-0.105	-0.090	-0.073	-0.056	-0.040	-0.024	-0.011	0.000
VERTICAL CURVE ORDINATE	0.000	0.006	0.012	0.016	0.019	0.022	0.024	0.024	0.024	0.023	0.021	0.019	0.017	0.015	0.013	0.010	0.008	0.006	0.004	0.002	0.000
REQUIRED CAMBER	0	31	62	88	111	132	147	156	162	162	157	148	136	120	103	83	64	46	28	13	0

TWENTIETH POINTS	.05	.10	.15	.20	.25	.30	.35	.40	.45	.50	.55	.60	.65	.70	.75	.80	.85	.90	.95	BRG.
	SPAN B																			
DEFLECTION DUE TO WEIGHT OF GIRDER	0.001	0.002	0.003	0.003	0.003	0.003	0.002	0.002	0.001	0.001	0.000	0.000	-0.001	-0.001	-0.001	-0.001	-0.001	-0.001	0.000	0.000
DEFLECTION DUE TO WEIGHT OF SLAB ✳	0.004	0.006	0.008	0.008	0.008	0.007	0.007	0.005	0.004	0.002	0.001	0.000	0.000	-0.001	-0.003	-0.003	-0.002	-0.001	-0.001	0.000
DEFLECTION DUE TO WEIGHT OF BARRIER RAIL	0.000	0.000	0.000	0.000	0.000	0.000	0.000	0.000	0.000	0.000	0.000	-0.001	-0.001	-0.001	0.000	0.000	0.000	0.000	0.000	0.000
TOTAL DEAD LOAD DEFLECTION	0.005	0.008	0.011	0.011	0.011	0.010	0.009	0.007	0.005	0.003	0.001	-0.001	-0.002	-0.003	-0.004	-0.004	-0.003	-0.002	-0.001	0.000
VERTICAL CURVE ORDINATE	0.000	0.000	0.000	0.000	0.000	0.000	0.000	0.000	0.000	0.000	0.000	0.000	0.000	0.000	0.000	0.000	0.000	0.000	0.000	0.000
REQUIRED CAMBER	-5	-8	-11	-11	-11	-10	-9	-7	-5	-3	-1	1	2	3	4	4	3	2	1	0

GIRDER #4

TWENTIETH POINTS	BRG.	.05	.10	.15	.20	.25	.30	.35	.40	.45	.50	.55	.60	.65	.70	.75	.80	.85	.90	.95	BRG.
	SPAN A																				
DEFLECTION DUE TO WEIGHT OF GIRDER	0.000	-0.008	-0.016	-0.023	-0.029	-0.034	-0.038	-0.041	-0.043	-0.043	-0.042	-0.040	-0.037	-0.032	-0.028	-0.023	-0.017	-0.012	-0.008	-0.003	0.000
DEFLECTION DUE TO WEIGHT OF SLAB ✳	0.000	-0.023	-0.045	-0.065	-0.083	-0.098	-0.111	-0.118	-0.122	-0.123	-0.120	-0.113	-0.103	-0.092	-0.077	-0.062	-0.048	-0.034	-0.021	-0.009	0.000
DEFLECTION DUE TO WEIGHT OF BARRIER RAIL	0.000	0.000	-0.001	-0.002	-0.003	-0.004	-0.004	-0.005	-0.006	-0.006	-0.006	-0.006	-0.006	-0.005	-0.004	-0.004	-0.003	-0.002	-0.001	-0.001	0.000
TOTAL DEAD LOAD DEFLECTION	0.000	-0.031	-0.062	-0.090	-0.115	-0.136	-0.153	-0.164	-0.171	-0.172	-0.168	-0.159	-0.146	-0.129	-0.109	-0.089	-0.068	-0.048	-0.030	-0.013	0.000
VERTICAL CURVE ORDINATE	0.000	0.006	0.012	0.016	0.020	0.022	0.024	0.025	0.024	0.023	0.021	0.019	0.017	0.015	0.012	0.010	0.008	0.006	0.004	0.002	0.000
REQUIRED CAMBER	0	37	74	106	135	158	177	189	195	195	189	178	163	144	121	99	76	54	34	15	0

TWENTIETH POINTS	.05	.10	.15	.20	.25	.30	.35	.40	.45	.50	.55	.60	.65	.70	.75	.80	.85	.90	.95	BRG.
	SPAN B																			
DEFLECTION DUE TO WEIGHT OF GIRDER	0.002	0.003	0.004	0.004	0.004	0.004	0.004	0.004	0.004	0.003	0.002	0.002	0.001	0.001	0.001	0.000	0.000	0.000	0.000	0.000
DEFLECTION DUE TO WEIGHT OF SLAB ✳	0.004	0.008	0.011	0.012	0.013	0.013	0.012	0.011	0.009	0.008	0.007	0.005	0.004	0.002	0.001	0.001	0.000	0.000	0.000	0.000
DEFLECTION DUE TO WEIGHT OF BARRIER RAIL	0.000	0.000	0.000	0.000	0.000	0.000	0.000	0.000	0.000	0.000	0.000	0.000	0.000	0.000	0.000	0.000	0.000	0.000	0.000	0.000
TOTAL DEAD LOAD DEFLECTION	0.006	0.011	0.015	0.016	0.017	0.017	0.016	0.015	0.013	0.011	0.009	0.007	0.005	0.003	0.002	0.001	0.000	0.000	0.000	0.000
VERTICAL CURVE ORDINATE	0.000	0.000	0.000	0.000	0.000	0.000	0.000	0.000	0.000	0.000	0.000	0.000	0.000	0.000	0.000	0.000	0.000	0.000	0.000	0.000
REQUIRED CAMBER	-6	-11	-15	-16	-17	-17	-16	-15	-13	-11	-9	-7	-5	-3	-2	-1	0	0	0	0

✳ INCLUDES SLAB, BUILDUPS & STAY-IN-PLACE FORMS.
ALL VALUES ARE SHOWN IN METERS, EXCEPT "REQUIRED CAMBER" WHICH IS SHOWN IN MILLIMETERS.

THERE IS NO CAMBER DISSIPATION DUE TO HEAT CURVING.

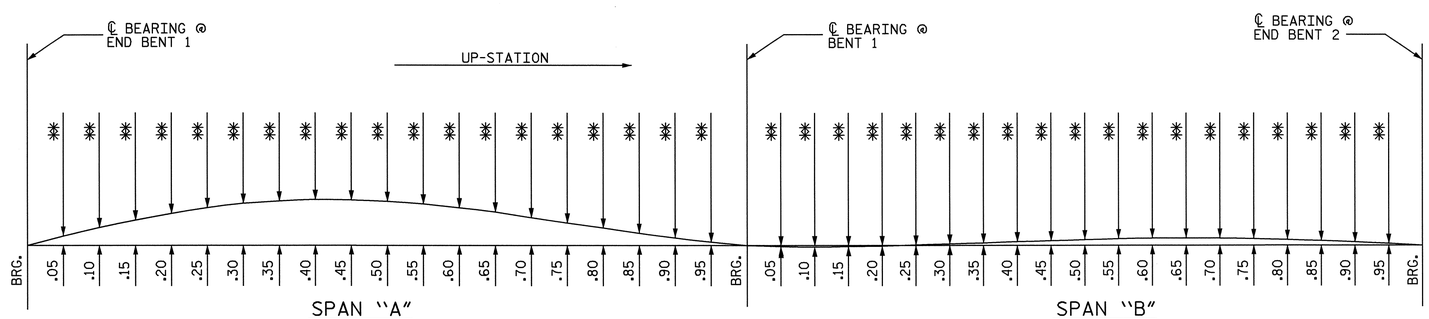

✳✳ FOR CAMBER AT TWENTIETH POINTS, SEE TABLES

SCHEMATIC CAMBER ORDINATES

SLOPE FOR THE ZERO CAMBER BASE LINE VARIES

PROJECT NO. R-0609IA
GUILFORD COUNTY
STATION: 54+36.375 -L-

STATE OF NORTH CAROLINA
DEPARTMENT OF TRANSPORTATION
RALEIGH

SUPERSTRUCTURE
DEAD LOAD
DEFLECTIONS
(FLYOVER)

NORTH CAROLINA PROFESSIONAL SEAL 23926 ENGINEER BRIAN C. HANKS
5/22/06

REVISIONS						SHEET NO.
NO.	BY:	DATE:	NO.	BY:	DATE:	S-250
1			3			TOTAL SHEETS
2			4			321

DRAWN BY : D. G. ELY DATE : 1/10/05
CHECKED BY : K. W. ALFORD DATE : 4/6/05

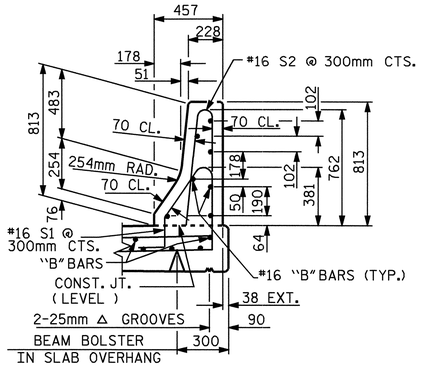

SECTION THRU RAIL

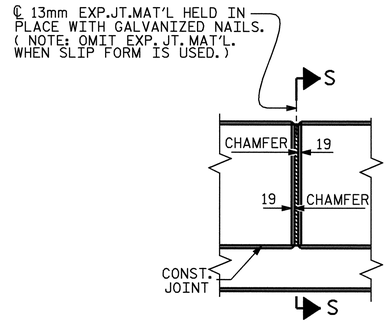

ELEVATION AT EXPANSION JOINTS

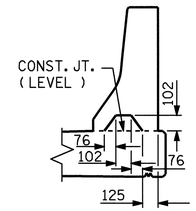

SECTION S-S

AT DAM IN OPEN JOINT
(THIS IS TO BE USED ONLY WHEN SLIP FORM IS USED)

NOTES

THE BARRIER RAIL IN A CONTINUOUS UNIT SHALL NOT BE CAST UNTIL ALL SLAB CONCRETE IN THE UNIT HAS BEEN CAST AND HAS REACHED A MINIMUM COMPRESSIVE STRENGTH OF 20.7 MPa.

ALL REINFORCING STEEL IN BARRIER RAILS SHALL BE EPOXY COATED.

VERTICAL GROOVED CONTRACTION JOINTS, 12mm IN DEPTH, SHALL BE TOOLED IN ALL EXPOSED FACES OF THE BARRIER RAIL AND IN ACCORDANCE WITH ARTICLE 825-10(B) OF THE STANDARD SPECIFICATIONS. THE CONTRACTION JOINT SHALL BE LOCATED AT EACH THIRD POINT BETWEEN BARRIER RAIL EXPANSION JOINTS. ONLY ONE CONTRACTION JOINT IS REQUIRED AT MIDPOINT OF BARRIER RAIL SEGMENTS LESS THAN 6.1m IN LENGTH AND NO CONTRACTION JOINTS ARE REQUIRED FOR THOSE SEGMENTS LESS THAN 3.5m IN LENGTH.

THE #16 S1 & #16 S2 BARS MAY BE SHIFTED SLIGHTLY AS NECESSARY IN ORDER TO MAINTAIN 50mm CLEARANCE FROM THE 13mm EXPANSION JOINT MATERIAL IN THE BARRIER RAIL.

BAR TYPES

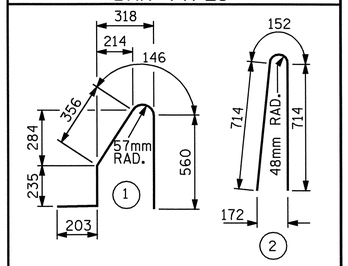

ALL BAR DIMENSIONS ARE OUT TO OUT

BILL OF MATERIAL

FOR CONCRETE BARRIER RAIL ONLY

BAR	NO.	SIZE	TYPE	LENGTH	WEIGHT
* B1	133	#16	STR	8900	1837
* B2	7	#16	STR	6920	75
* B3	7	#16	STR	5400	59
* B4	7	#16	STR	8060	88
* B5	7	#16	STR	8760	95
* S1	669	#16	1	1500	1557
* S2	669	#16	2	1580	1641

* EPOXY COATED REINFORCING STEEL 5352 kg

CLASS AA CONCRETE 50.3 CU. METER

CONCRETE BARRIER RAIL 200.590 METERS

BARRIER RAIL DETAILS

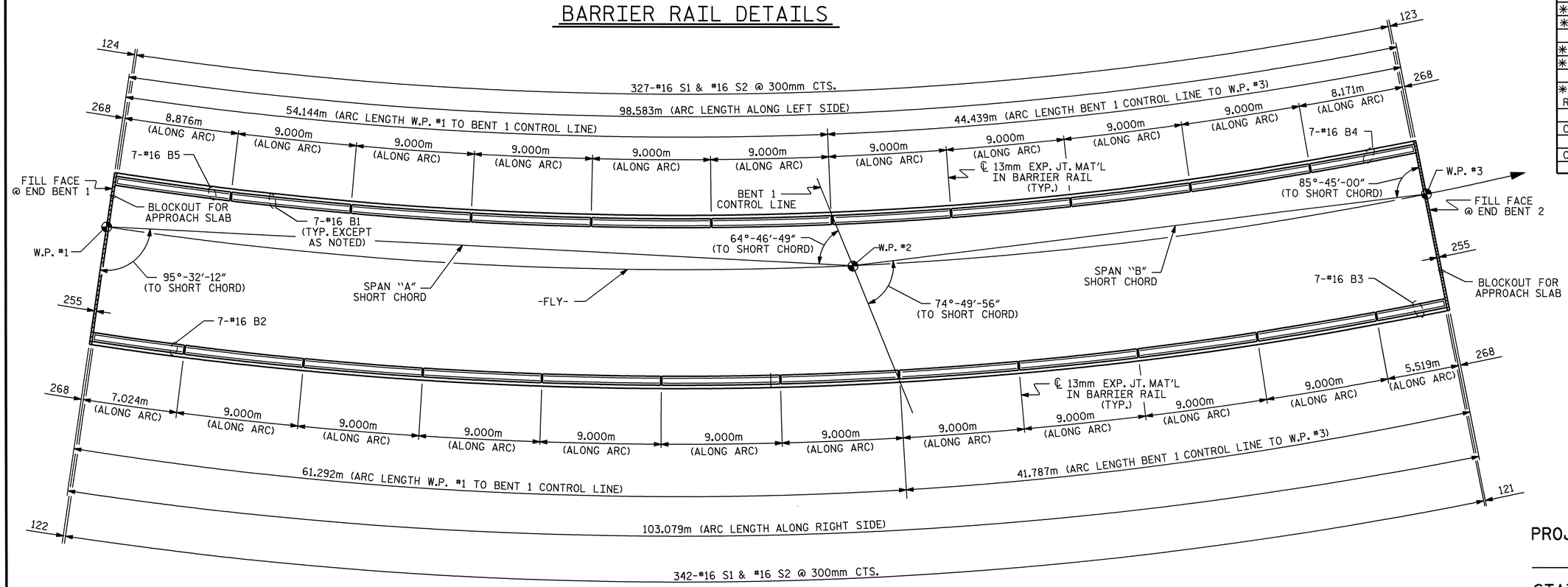

PLAN OF BARRIER RAIL

PROJECT NO. R-0609IA
GUILFORD COUNTY
STATION: 54+36.375 -L-

STATE OF NORTH CAROLINA
DEPARTMENT OF TRANSPORTATION
RALEIGH

SUPERSTRUCTURE
CONCRETE BARRIER RAIL
(FLYOVER)

NORTH CAROLINA PROFESSIONAL SEAL 23926 ENGINEER BRIAN C. HANKS
5/22/06

REVISIONS						SHEET NO.
NO.	BY:	DATE:	NO.	BY:	DATE:	S-251
1			3			TOTAL SHEETS
2			4			321

ASSEMBLED BY : D. G. ELY		DATE : 1/11/05	
CHECKED BY : K. W. ALFORD		DATE : 4/7/05	
DRAWN BY : ARB 5/87	REV. 8/16/99	RWW/LES	
CHECKED BY : SJD 9/87	REV. 10/17/00	RWW/LES	
	REV. 5/7/03R	RWW/JTE	

15-MAY-2006 12:10
J:\STRUCT~1\frye\FINAL_~1\Str8\R0609IA_sd_BR_08.dgn
rwwright

STD. No. CBR1SM

SUPERSTRUCTURE BILL OF MATERIAL

	CLASS AA CONCRETE	REINFORCING STEEL	EPOXY COATED REINFORCING STEEL
	m3	(kg)	(kg)
SPANS "A" & "B"		27,895	27,860
POUR #1	104.5		
POUR #2	224.5		
POUR #3	144.7		
TOTALS **	473.7	27,895	27,860

** QUANTITIES FOR BARRIER RAIL ARE NOT INCLUDED

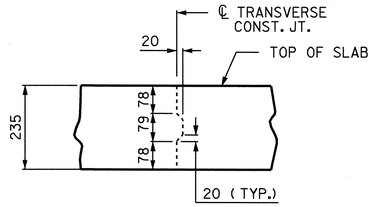

TRANSVERSE CONST. JT. DETAIL

NOTE: REINFORCING STEEL IN SLAB NOT SHOWN. LONGITUDINAL REINFORCING STEEL SHALL BE CONTINUOUS THRU JOINT.

GROOVING BRIDGE FLOORS

APPROACH SLABS	168.9	m^2
BRIDGE DECK	1,111.6	m^2
TOTAL	1280.5	m^2

SUPERSTRUCTURE REINFORCING STEEL LENGTHS ARE BASED ON THE FOLLOWING MINIMUM SPLICE LENGTHS

BAR SIZE	SUPERSTRUCTURE EXCEPT APPROACH SLABS, PARAPET, AND BARRIER RAIL		APPROACH SLABS		PARAPET AND BARRIER RAIL
	EPOXY COATED	UNCOATED	EPOXY COATED	UNCOATED	
#13	610	540	610	540	840
#16	770	660	770	660	1050
#19	920	790	1190	790	1330
#22	1580	1060			
#25	2080	1390			

BILL OF MATERIAL

SPANS A AND B

BAR	NO.	SIZE	TYPE	LENGTH	WEIGHT
* A1	732	16	STR	12880	14633
A2	732	16	STR	12880	14633
* B1	162	13	STR	7700	1240
* B2	159	22	STR	15080	7294
* B3	81	13	STR	6920	557
* B4	12	13	STR	8780	105
* B5	13	13	STR	8500	110
B6	24	16	STR	17020	634
B7	90	16	STR	17220	2405
B8	90	16	STR	17440	2436
B9	90	16	STR	17640	2464
B10	24	16	STR	17720	660
* D1	114	22	STR	10000	3468
H1	40	32	4	6960	1783
H2	40	19	4	3160	283
K1	32	16	STR	14900	740
K2	16	16	STR	900	22
* S1	72	13	1	3700	265
* S2	72	13	2	2620	188
U1	78	16	3	6140	743
V1	36	25	STR	2940	421
V2	8	16	STR	2940	37
V3	20	16	STR	3020	94
V4	20	16	STR	2920	91
V5	36	25	STR	2880	412
V6	8	16	STR	3000	37
REINFORCING STEEL				kg	27895
* EPOXY COATED REINFORCING STEEL				kg	27860

BAR TYPES

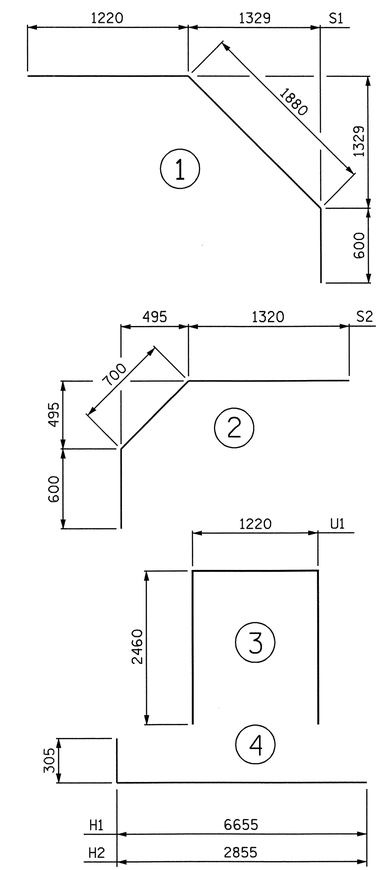

ALL BAR DIMENSIONS ARE OUT TO OUT

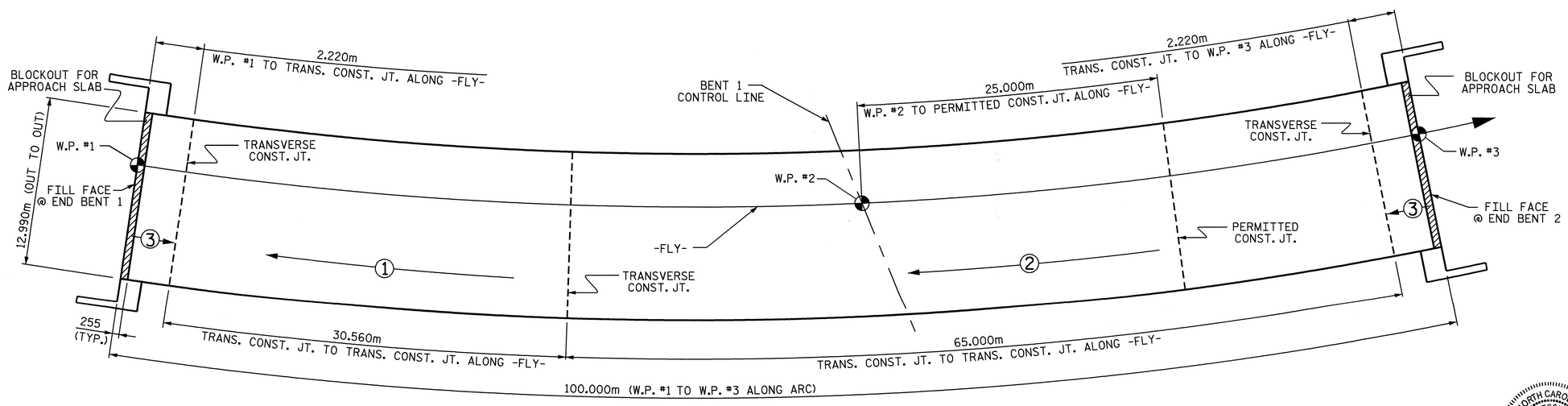

POUR NUMBER AND DIRECTION

POURING SEQUENCE AND LAYOUT FOR COMPUTING AREA OF REINFORCED CONCRETE DECK SLAB (SQ. METER = 1,303.2)

PROJECT NO. R-0609IA
GUILFORD COUNTY
STATION: 54+36.375 -L-

STATE OF NORTH CAROLINA
DEPARTMENT OF TRANSPORTATION
RALEIGH

SUPERSTRUCTURE BILL OF MATERIAL

(FLYOVER)

NORTH CAROLINA PROFESSIONAL SEAL 23926 ENGINEER BRIAN C. HANKS
11/9/06

REVISIONS						
NO.	BY:	DATE:	NO.	BY:	DATE:	
1			3			
2			4			

SHEET NO. S-252
TOTAL SHEETS 321

DRAWN BY : D. G. ELY DATE : 1/6/05
CHECKED BY : K. W. ALFORD DATE : 4/13/05

09-NOV-2006 14:23
R:\Structures\frye\FINAL_PLANS\Str8\R0609IA_sd_BM_08.dgn
bhanks

NOTES:

FOR PILE SPLICE DETAILS, SEE SHEET 2 OF 2.

FOR TEMPORARY DRAINAGE DETAILS, SEE SHEET 2 OF 2.

THE CONTRACTOR SHALL PROVIDE FOR INSTALLATION OF THE 102mm DIAMETER DRAIN PIPE THROUGH THE WING WALL AS REQUIRED FOR REINFORCED BRIDGE APPROACH FILLS, SEE THE ROADWAY PLANS. REINFORCING STEEL IN THE WING WALL MAY BE SHIFTED AS NECESSARY TO CLEAR THE DRAIN PIPE.

THE TOP SURFACE OF THE END BENT CAP AND WINGS, EXCLUDING THE OUTSIDE 4" AND THE BEARING AREA, SHALL BE RAKED TO A DEPTH OF 1/4".

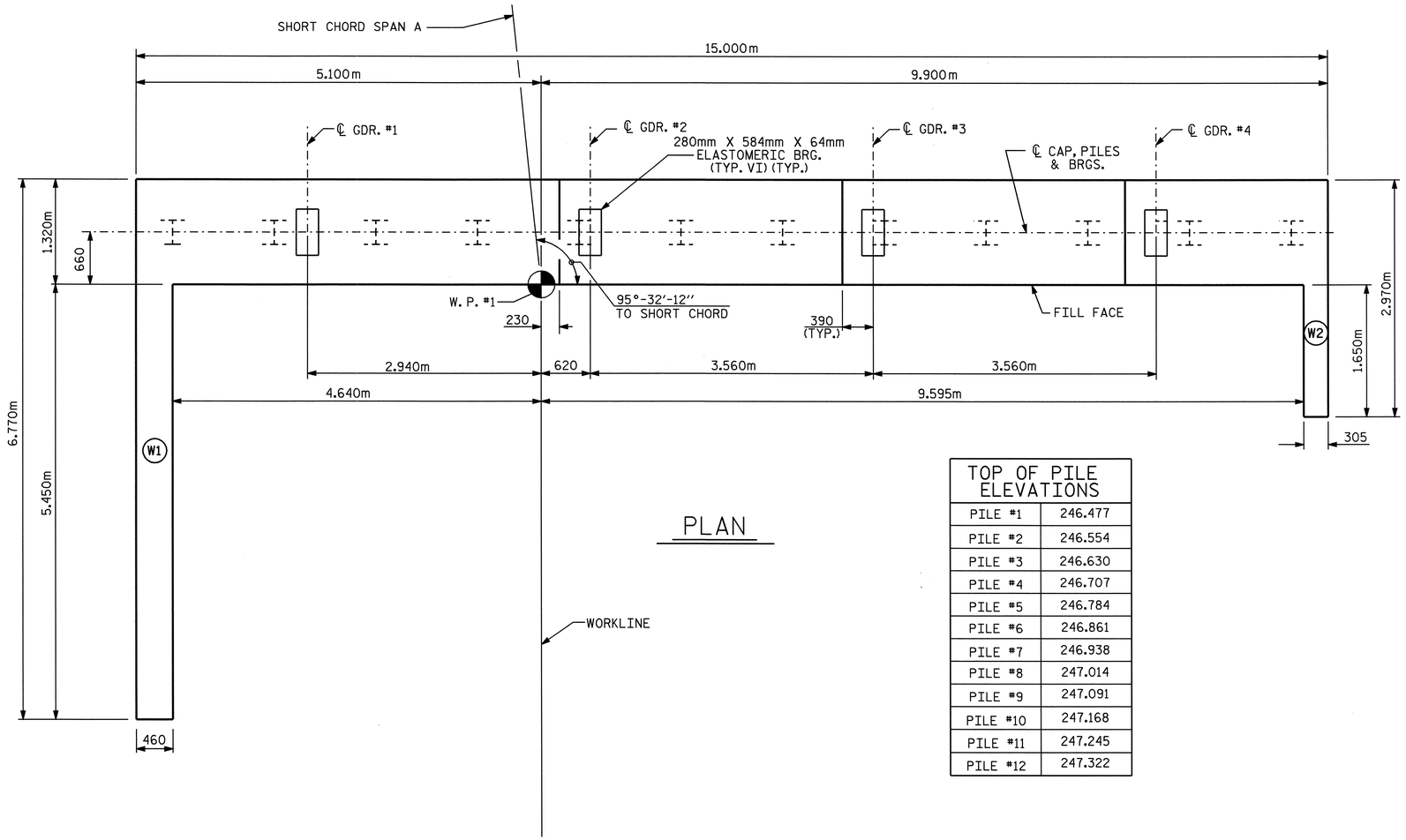

PLAN

TOP OF PILE ELEVATIONS	
PILE #1	246.477
PILE #2	246.554
PILE #3	246.630
PILE #4	246.707
PILE #5	246.784
PILE #6	246.861
PILE #7	246.938
PILE #8	247.014
PILE #9	247.091
PILE #10	247.168
PILE #11	247.245
PILE #12	247.322

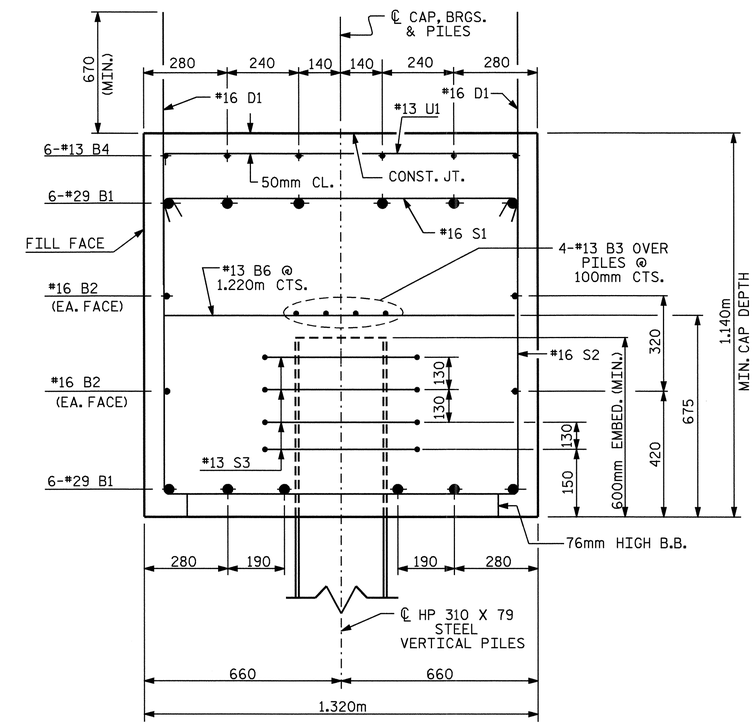

SECTION A-A

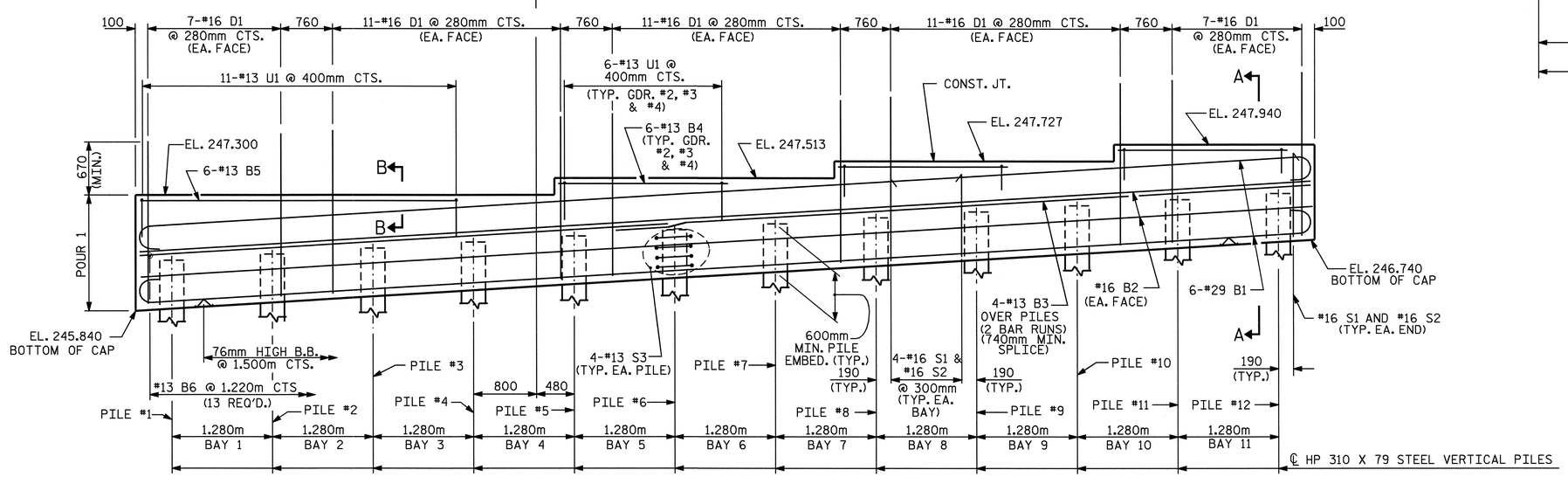

ELEVATION

(WINGS NOT SHOWN FOR CLARITY)
(FOR WING REINFORCING STEEL AND DETAILS, SEE SHEET 2 OF 2)

PROJECT NO. R-0609IA
GUILFORD COUNTY
STATION: 54+36.375 -L-

SHEET 1 OF 2

STATE OF NORTH CAROLINA
DEPARTMENT OF TRANSPORTATION
RALEIGH

SUBSTRUCTURE
END BENT 1

NORTH CAROLINA PROFESSIONAL SEAL 23926 ENGINEER BRIAN C. HANKS
5/22/06

REVISIONS							SHEET NO.
NO.	BY:	DATE:	NO.	BY:	DATE:		S-253
1			3				TOTAL SHEETS
2			4				321

DRAWN BY : QT NGUYEN DATE : 2-05
CHECKED BY : RW WRIGHT DATE : 4-05

15-MAY-2006 12:08
J:\STRUCT~1\frye\FINAL_~1\Str8\R0609IA_sd_E_08.dgn
rwwright

STR.#8

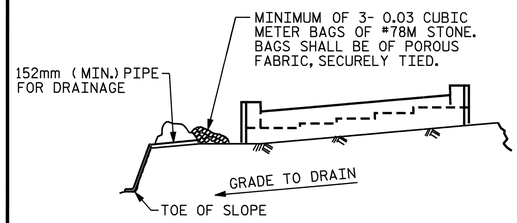

BAGGED STONE AND PIPE SHALL BE PLACED IMMEDIATELY AFTER COMPLETION OF END BENT EXCAVATION. PIPE MAY BE EITHER CONCRETE, CORRUGATED STEEL, CORRUGATED ALUMINUM ALLOY, OR CORRUGATED PLASTIC. PERFORATED PIPE WILL NOT BE ALLOWED.

BAGGED STONE SHALL REMAIN IN PLACE UNTIL THE ENGINEER DIRECTS THAT IT BE REMOVED. THE CONTRACTOR SHALL REMOVE AND DISPOSE OF SILT ACCUMULATIONS AT BAGGED STONE WHEN SO DIRECTED BY THE ENGINEER. BAGS SHALL BE REMOVED AND REPLACED WHENEVER THE ENGINEER DETERMINES THAT THEY HAVE DETERIORATED AND LOST THEIR EFFECTIVENESS.

NO SEPARATE PAYMENT WILL BE MADE FOR THIS WORK AND THE ENTIRE COST OF THIS WORK SHALL BE INCLUDED IN THE UNIT CONTRACT PRICE BID FOR THE SEVERAL PAY ITEMS.

TEMPORARY DRAINAGE AT END BENT

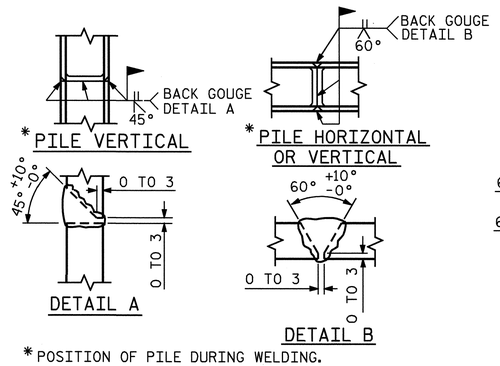

PILE SPLICE DETAILS

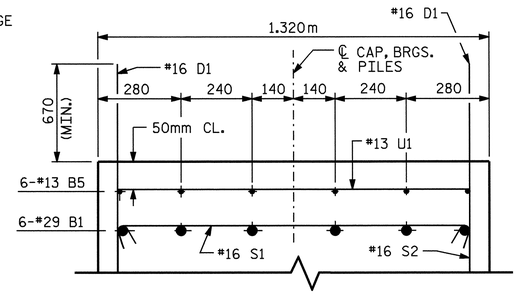

PARTIAL SECTION B-B

BAR TYPES

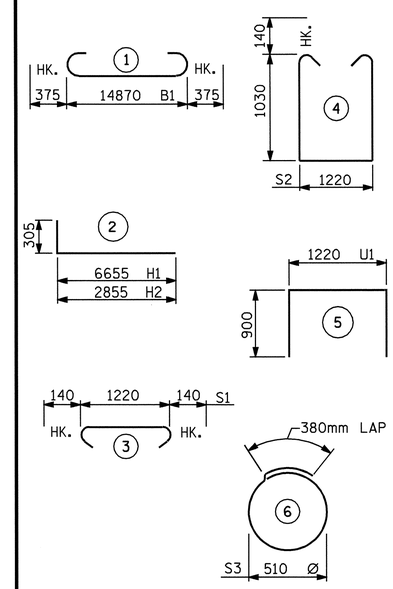

ALL BAR DIMENSIONS ARE OUT TO OUT.

BILL OF MATERIAL
END BENT 1

BAR	NO.	SIZE	TYPE	LENGTH	WEIGHT
B1	12	#29	1	15620	948
B2	4	#16	STR	14800	92
B3	8	#13	STR	7760	62
B4	18	#13	STR	2160	39
B5	6	#13	STR	4040	24
B6	13	#13	STR	1220	16
D1	94	#16	STR	2060	301
H1	10	#32	2	6960	446
H2	8	#19	2	3160	57
S1	46	#16	3	1500	107
S2	46	#16	4	3560	254
S3	48	#13	6	1980	94
U1	29	#13	5	3020	87
V1	36	#25	STR	2900	415
V2	12	#16	STR	1820	34

REINFORCING STEEL = 2976 KG

CLASS A CONCRETE BREAKDOWN

CAP & LOWER WINGS 29.4 M3

TOTAL CONCRETE 29.4 M3

HP 310 X 79 STEEL PILES
NO. 12 66.0 METERS

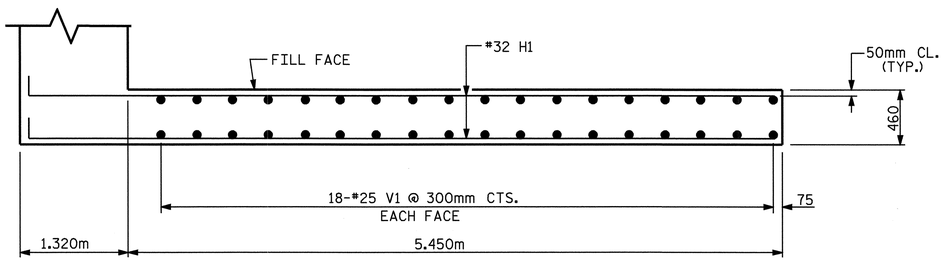

PLAN OF WING W1

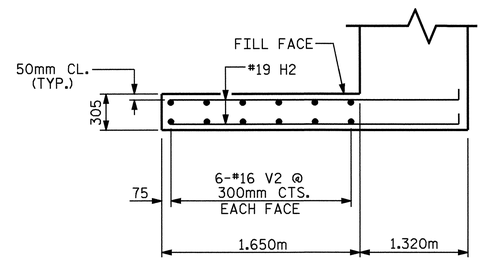

PLAN OF WING W2

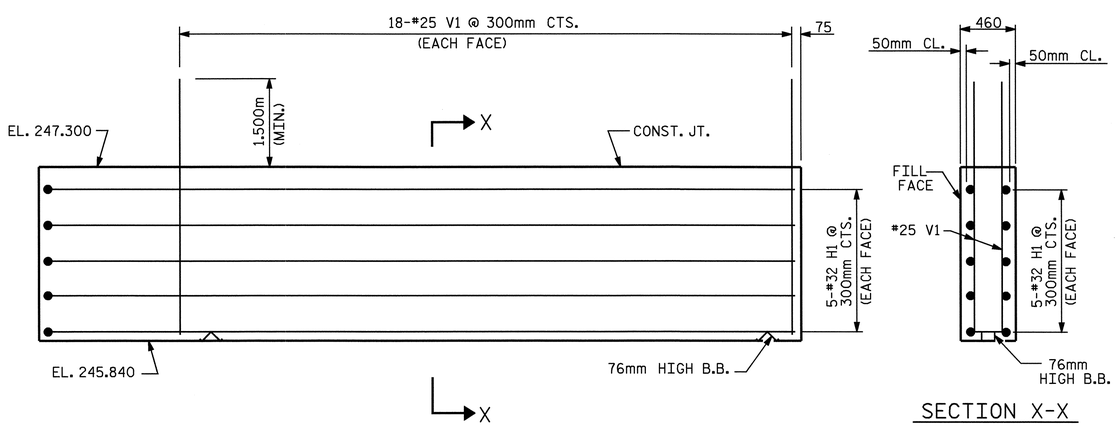

ELEVATION OF WING W1

SECTION X-X

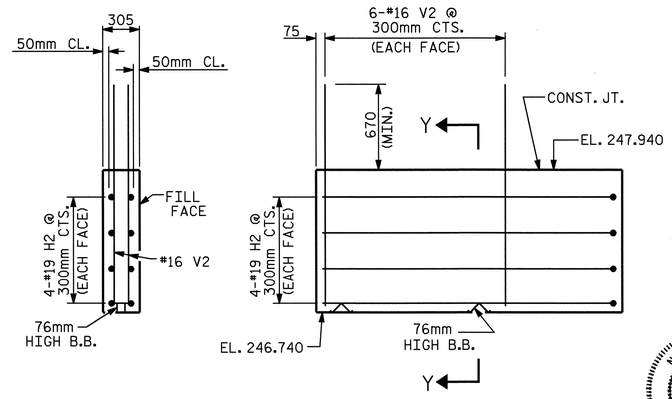

SECTION Y-Y

ELEVATION OF WING W2

NORTH CAROLINA PROFESSIONAL SEAL 23926 ENGINEER BRIAN C. HANKS
5/22/06

PROJECT NO. R-0609IA
GUILFORD COUNTY
STATION: 54+36.375 -L-

SHEET 2 OF 2

STATE OF NORTH CAROLINA
DEPARTMENT OF TRANSPORTATION
RALEIGH

SUBSTRUCTURE
END BENT 1

REVISIONS								SHEET NO.
NO.	BY:	DATE:	NO.	BY:	DATE:			S-254
1			3					TOTAL SHEETS
2			4					321

DRAWN BY : QT NGUYEN DATE : 2-05
CHECKED BY : RW WRIGHT DATE : 4-05

STR. #8

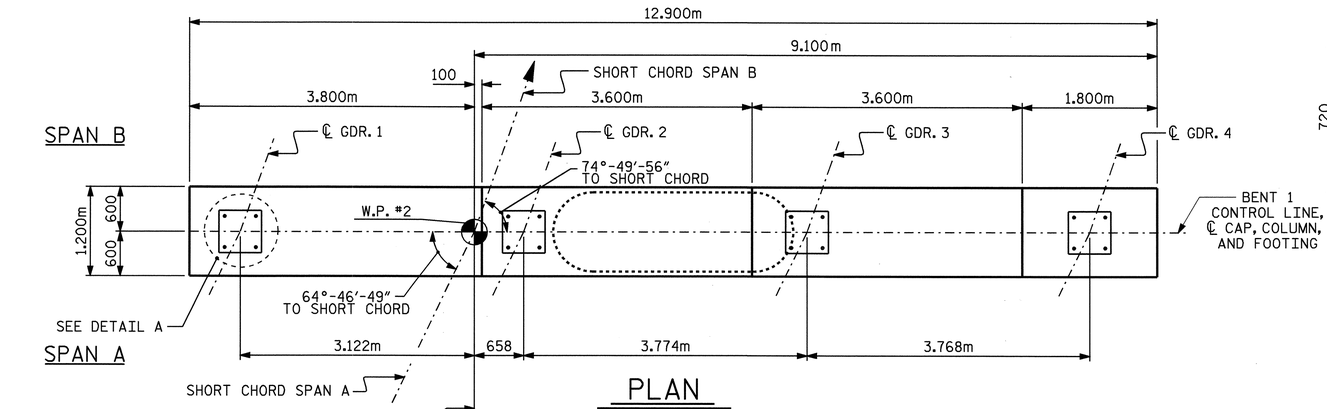

PLAN

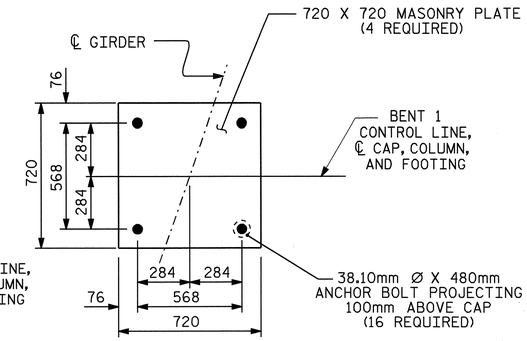

DETAIL A

NOTES

STIRRUPS IN CAP MAY BE SHIFTED AS NECESSARY TO CLEAR ANCHOR BOLTS.

HOOKS ON "V" BARS MAY BE TURNED AS NECESSARY FOR PLACING REINFORCING STEEL.

DETAILED DRAWINGS FOR FALSEWORK AND FORMS FOR THIS HAMMERHEAD BENT SHALL BE SUBMITTED. SEE SHEET SNSM.

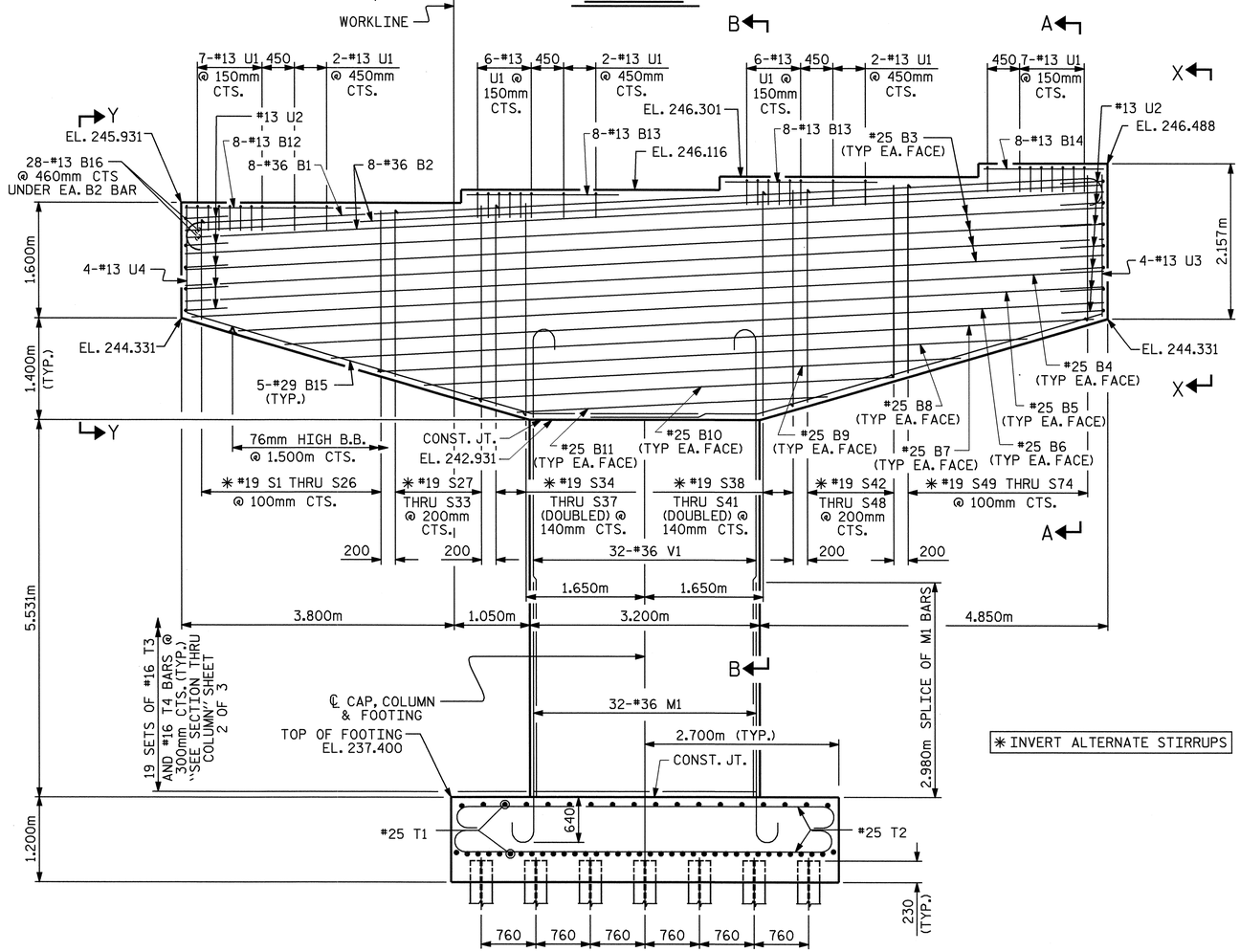

✳ INVERT ALTERNATE STIRRUPS

ELEVATION

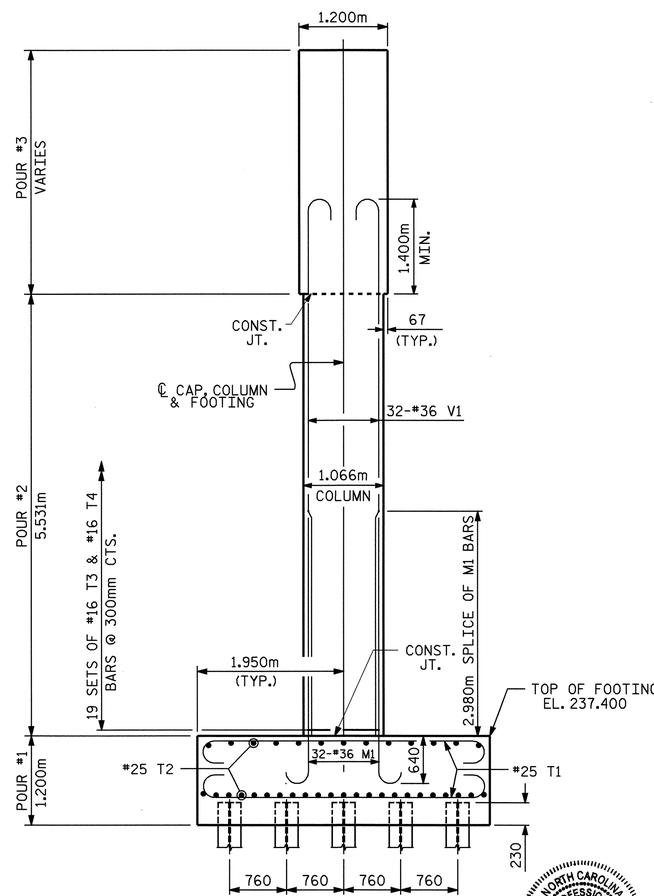

END ELEVATION

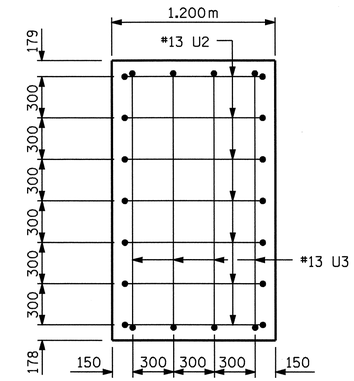

END VIEW X-X

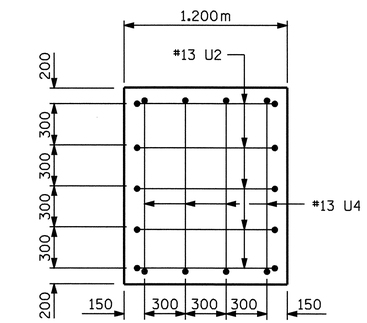

END VIEW Y-Y

PROJECT NO. R-0609IA
GUILFORD COUNTY
STATION: 54+36.375 -L-

SHEET 1 OF 3

STATE OF NORTH CAROLINA
DEPARTMENT OF TRANSPORTATION
RALEIGH

SUBSTRUCTURE
BENT 1

NORTH CAROLINA PROFESSIONAL SEAL 23926 ENGINEER BRIAN C. HAWKS
5/22/06

REVISIONS							SHEET NO.
NO.	BY:	DATE:	NO.	BY:	DATE:		S-255
1			3				TOTAL SHEETS
2			4				321

DRAWN BY : J.L. WALTON DATE : 4/25/05
CHECKED BY : R.W. WRIGHT DATE : 5/2/05

15-MAY-2006 12:08
J:\STRUCT~1\frye\FINAL_~1\Str8\R0609IA_sd_B*_08.dgn
rwwright

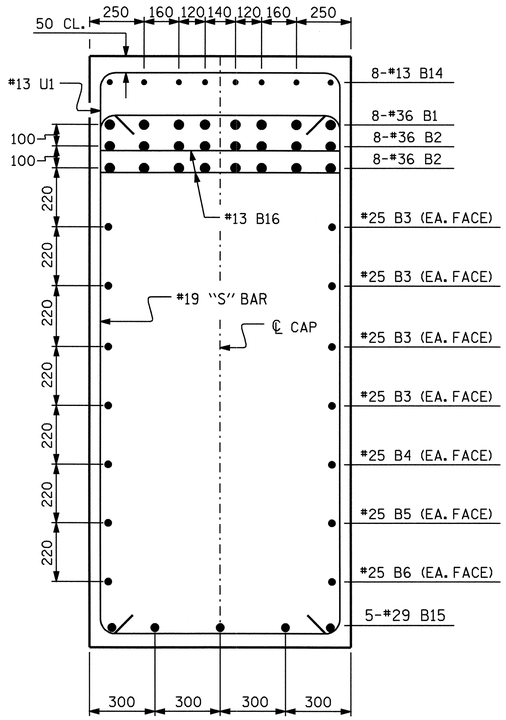

SECTION A-A

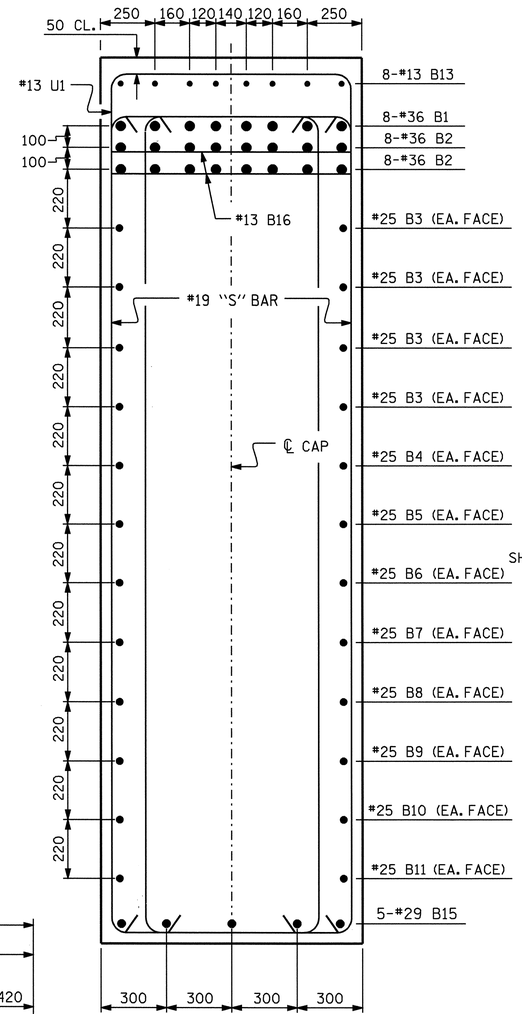

SECTION B-B

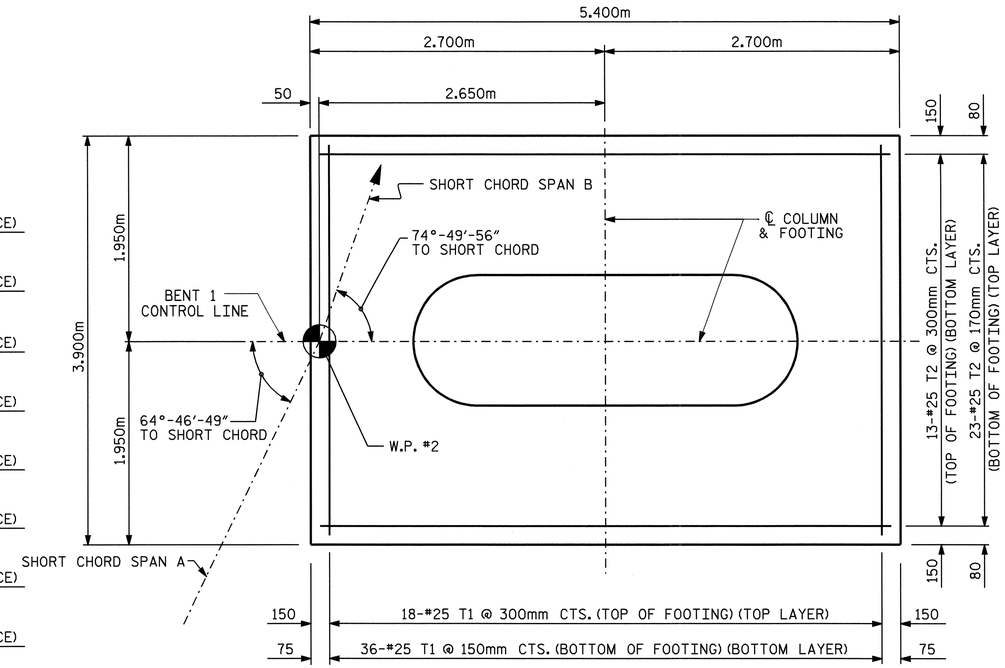

PLAN OF FOOTING

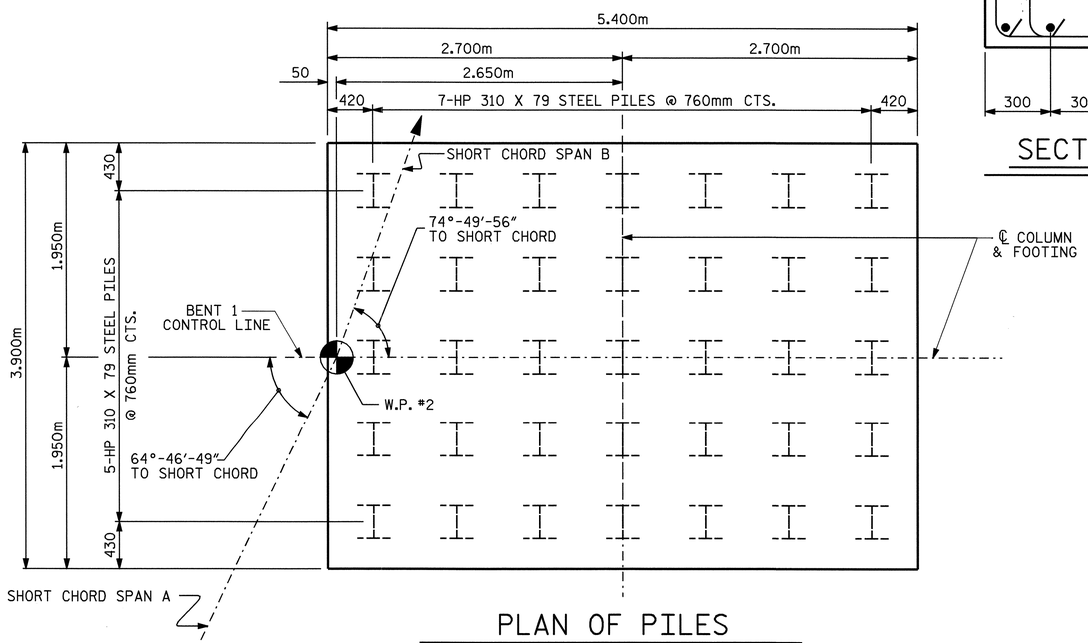

PLAN OF PILES

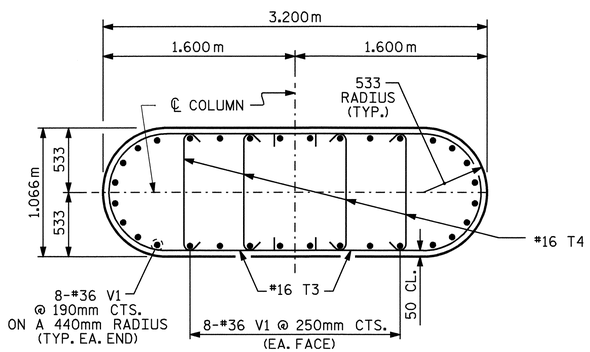

SECTION THRU COLUMN

(M1 BARS TO MATCH V1 BARS IN COLUMN)

PROJECT NO. R-0609IA
GUILFORD COUNTY
STATION: 54+36.375 -L-

SHEET 2 OF 3

STATE OF NORTH CAROLINA
DEPARTMENT OF TRANSPORTATION
RALEIGH

SUBSTRUCTURE
BENT 1

NORTH CAROLINA PROFESSIONAL SEAL 23926 ENGINEER BRIAN C. HANKS
5/22/06

REVISIONS						SHEET NO.
NO.	BY:	DATE:	NO.	BY:	DATE:	S-256
1			3			TOTAL SHEETS
2			4			321

DRAWN BY : J.L. WALTON DATE : 2/25/05
CHECKED BY : R.W. WRIGHT DATE : 5/2/05

15-MAY-2006 12:08
J:\STRUCT~1\frye\FINAL_~1\Str8\R0609IA_sd_B*_08.dgn
rwwright

STR. #8

BAR TYPES

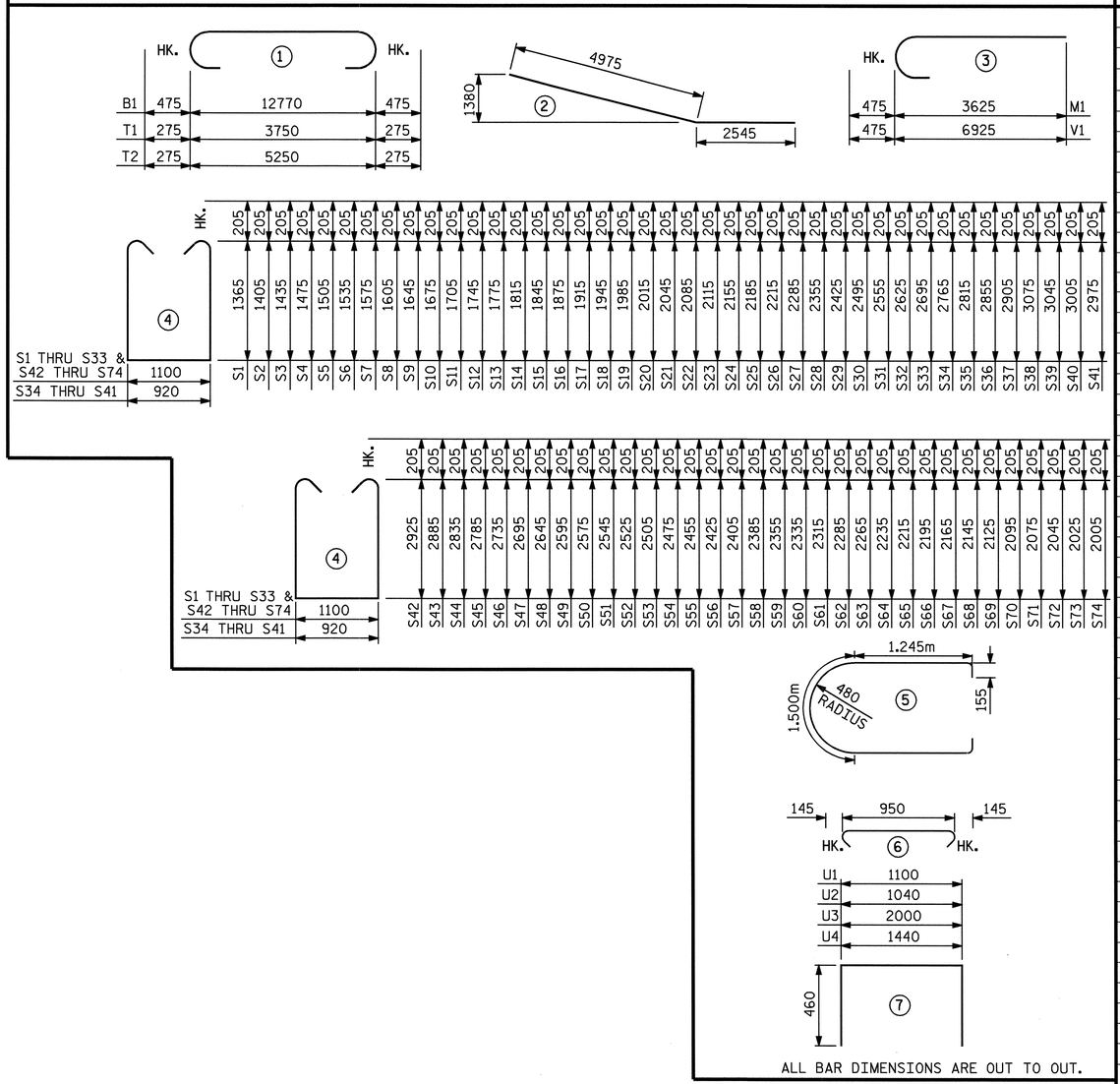

ALL BAR DIMENSIONS ARE OUT TO OUT.

BILL OF MATERIAL BENT 1

BAR	NO.	SIZE	TYPE	LENGTH	WEIGHT
B1	8	#36	1	13720	868
B2	16	#36	STR	12820	1622
B3	8	#25	STR	12820	407
B4	2	#25	STR	12640	100
B5	2	#25	STR	12000	95
B6	2	#25	STR	11360	90
B7	2	#25	STR	10460	83
B8	2	#25	STR	8880	71
B9	2	#25	STR	7300	58
B10	2	#25	STR	5720	45
B11	2	#25	STR	4160	33
B12	8	#13	STR	2440	19
B13	16	#13	STR	2120	34
B14	8	#13	STR	1660	13
B15	10	#29	2	7520	381
B16	56	#13	STR	1100	61
M1	32	#36	3	4100	1037
S1	1	#19	4	4240	9
S2	1	#19	4	4320	10
S3	1	#19	4	4380	10
S4	1	#19	4	4460	10
S5	1	#19	4	4520	10
S6	1	#19	4	4580	10
S7	1	#19	4	4660	10
S8	1	#19	4	4720	11
S9	1	#19	4	4800	11
S10	1	#19	4	4860	11
S11	1	#19	4	4920	11
S12	1	#19	4	5000	11
S13	1	#19	4	5060	11
S14	1	#19	4	5140	11
S15	1	#19	4	5200	12
S16	1	#19	4	5260	12
S17	1	#19	4	5340	12
S18	1	#19	4	5400	12
S19	1	#19	4	5480	12
S20	1	#19	4	5540	12
S21	1	#19	4	5600	13
S22	1	#19	4	5680	13
S23	1	#19	4	5740	13
S24	1	#19	4	5820	13
S25	1	#19	4	5880	13
S26	1	#19	4	5940	13
S27	1	#19	4	6080	14
S28	1	#19	4	6220	14
S29	1	#19	4	6360	14
S30	1	#19	4	6500	15
S31	1	#19	4	6620	15
S32	1	#19	4	6760	15
S33	1	#19	4	6900	15
S34	2	#19	4	6860	31
S35	2	#19	4	6960	31
S36	2	#19	4	7040	31
S37	2	#19	4	7140	32
S38	2	#19	4	7480	33
S39	2	#19	4	7420	33
S40	2	#19	4	7340	33
S41	2	#19	4	7280	33
S42	1	#19	4	7360	16
S43	1	#19	4	7280	16
S44	1	#19	4	7180	16
S45	1	#19	4	7080	16
S46	1	#19	4	6980	16
S47	1	#19	4	6900	15
S48	1	#19	4	6800	15
S49	1	#19	4	6700	15
S50	1	#19	4	6660	15
S51	1	#19	4	6600	15
S52	1	#19	4	6560	15

BAR	NO.	SIZE	TYPE	LENGTH	WEIGHT
S53	1	#19	4	6520	15
S54	1	#19	4	6460	14
S55	1	#19	4	6420	14
S56	1	#19	4	6360	14
S57	1	#19	4	6320	14
S58	1	#19	4	6280	14
S59	1	#19	4	6220	14
S60	1	#19	4	6180	14
S61	1	#19	4	6140	14
S62	1	#19	4	6080	14
S63	1	#19	4	6040	13
S64	1	#19	4	5980	13
S65	1	#19	4	5940	13
S66	1	#19	4	5900	13
S67	1	#19	4	5840	13
S68	1	#19	4	5800	13
S69	1	#19	4	5760	13
S70	1	#19	4	5700	13
S71	1	#19	4	5660	13
S72	1	#19	4	5600	13
S73	1	#19	4	5560	12
S74	1	#19	4	5520	12
T1	54	#25	1	4300	923
T2	36	#25	1	5800	830
T3	38	#16	5	4300	254
T4	76	#16	6	1240	146
U1	33	#13	7	2020	66
U2	12	#13	7	1960	23
U3	4	#13	7	2920	12
U4	4	#13	7	2360	9
V1	32	#36	3	7400	1872
REINFORCING STEEL				KG.	10272

CLASS "A" CONCRETE		
POUR #1 (FOOTING)	M3	25.3
POUR #2 (COLUMN)	M3	17.5
POUR #3 (CAP)	M3	41.9
TOTAL CONCRETE	M3	84.7

HP 310 X 79 STEEL PILES	
NO. 35	METERS 122.5

PROJECT NO. R-0609IA
GUILFORD COUNTY
STATION: 54+36.375 -L-

SHEET 3 OF 3

STATE OF NORTH CAROLINA
DEPARTMENT OF TRANSPORTATION
RALEIGH

SUBSTRUCTURE
BENT 1

NORTH CAROLINA PROFESSIONAL SEAL 23926 ENGINEER BRIAN C. HAINES
5/22/06

REVISIONS								SHEET NO.
NO.	BY:	DATE:	NO.	BY:	DATE:			S-257
1			3					TOTAL SHEETS
2			4					321

DRAWN BY : J.L. WALTON DATE : 4/25/05
CHECKED BY : R.W. WRIGHT DATE : 5/2/05

15-MAY-2006 12:08
J:\STRUCT~1\frye\FINAL_~1\Str8\R0609IA_sd_B*_08.dgn
rwwright

STR. #8

NOTES:

FOR PILE SPLICE DETAILS, SEE SHEET 2 OF 2.

FOR TEMPORARY DRAINAGE DETAILS, SEE SHEET 2 OF 2.

THE CONTRACTOR SHALL PROVIDE FOR INSTALLATION OF THE 102mm DIAMETER DRAIN PIPE THROUGH THE WING WALL AS REQUIRED FOR REINFORCED BRIDGE APPROACH FILLS, SEE THE ROADWAY PLANS. REINFORCING STEEL IN THE WING WALL MAY BE SHIFTED AS NECESSARY TO CLEAR THE DRAIN PIPE.

THE TOP SURFACE OF THE END BENT CAP AND WINGS, EXCLUDING THE OUTSIDE 4" AND THE BEARING AREA, SHALL BE RAKED TO A DEPTH OF 1/4".

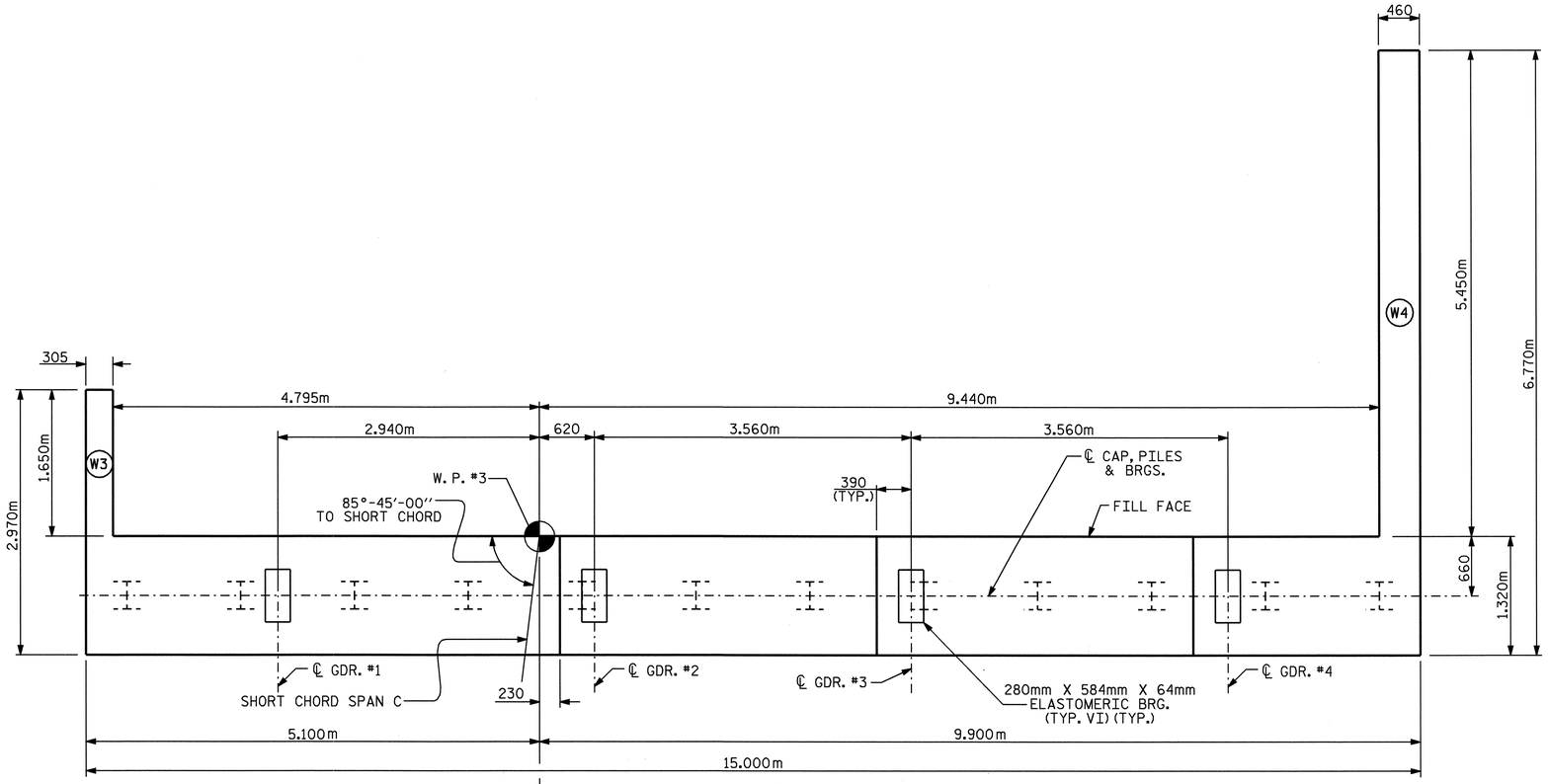

PLAN

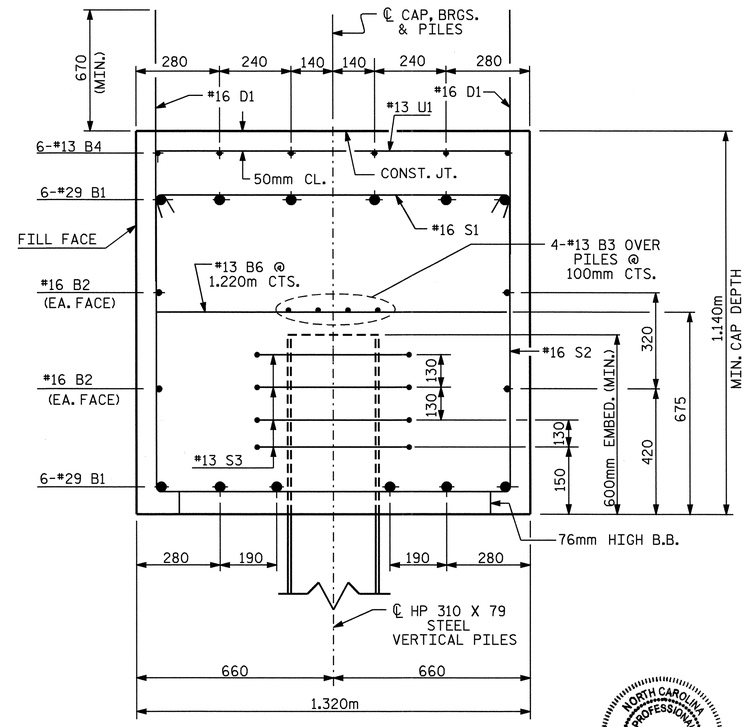

SECTION A-A

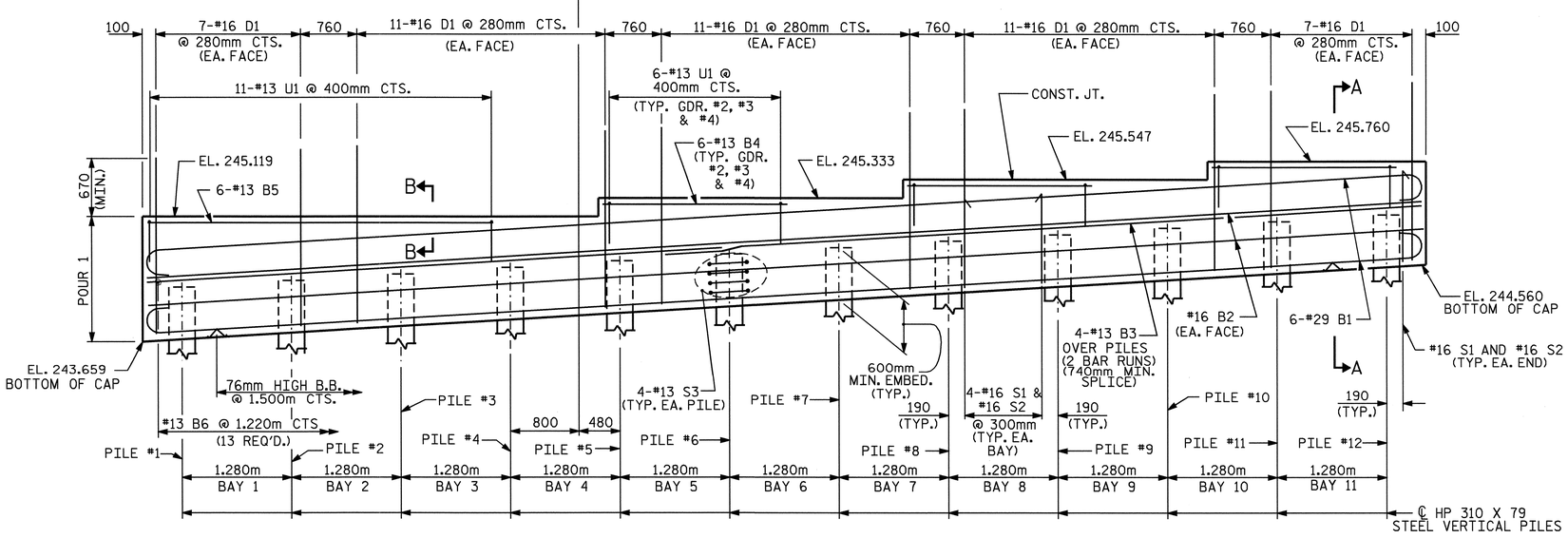

ELEVATION

(WINGS NOT SHOWN FOR CLARITY)
(FOR WING REINFORCING STEEL AND DETAILS, SEE SHEET 2 OF 2)

TOP OF PILE ELEVATIONS	
PILE #1	244.295
PILE #2	244.372
PILE #3	244.449
PILE #4	244.526
PILE #5	244.603
PILE #6	244.680
PILE #7	244.757
PILE #8	244.834
PILE #9	244.911
PILE #10	244.988
PILE #11	245.065
PILE #12	245.141

NORTH CAROLINA PROFESSIONAL SEAL 23926 ENGINEER BRIAN C. HANKS
5/22/06

PROJECT NO. R-0609IA
GUILFORD COUNTY
STATION: 54+36.375 -L-

SHEET 1 OF 2

STATE OF NORTH CAROLINA
DEPARTMENT OF TRANSPORTATION
RALEIGH

SUBSTRUCTURE
END BENT 2

REVISIONS						SHEET NO.
NO.	BY:	DATE:	NO.	BY:	DATE:	S-258
1			3			TOTAL SHEETS
2			4			321

DRAWN BY : QT NGUYEN DATE : 2-05
CHECKED BY : RW WRIGHT DATE : 4-05

15-MAY-2006 12:43
J:\STRUCT~1\frye\FINAL_~1\Str8\R0609IA_sd_E_08.dgn
rwwright

STR.#8

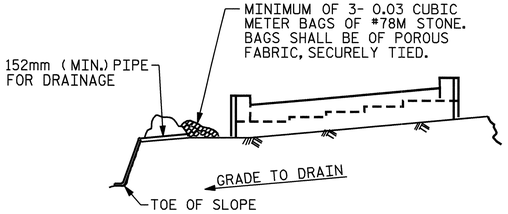

BAGGED STONE AND PIPE SHALL BE PLACED IMMEDIATELY AFTER COMPLETION OF END BENT EXCAVATION. PIPE MAY BE EITHER CONCRETE, CORRUGATED STEEL, CORRUGATED ALUMINUM ALLOY, OR CORRUGATED PLASTIC. PERFORATED PIPE WILL NOT BE ALLOWED.

BAGGED STONE SHALL REMAIN IN PLACE UNTIL THE ENGINEER DIRECTS THAT IT BE REMOVED. THE CONTRACTOR SHALL REMOVE AND DISPOSE OF SILT ACCUMULATIONS AT BAGGED STONE WHEN SO DIRECTED BY THE ENGINEER. BAGS SHALL BE REMOVED AND REPLACED WHENEVER THE ENGINEER DETERMINES THAT THEY HAVE DETERIORATED AND LOST THEIR EFFECTIVENESS.

NO SEPARATE PAYMENT WILL BE MADE FOR THIS WORK AND THE ENTIRE COST OF THIS WORK SHALL BE INCLUDED IN THE UNIT CONTRACT PRICE BID FOR THE SEVERAL PAY ITEMS.

TEMPORARY DRAINAGE AT END BENT

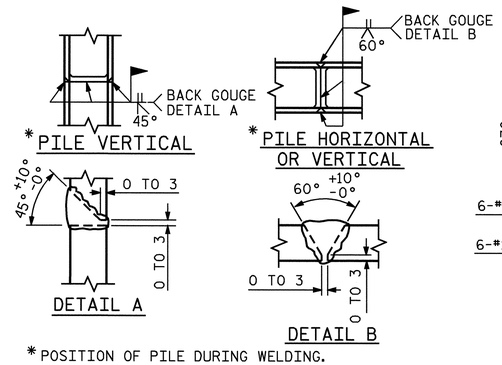

* POSITION OF PILE DURING WELDING.

PILE SPLICE DETAILS

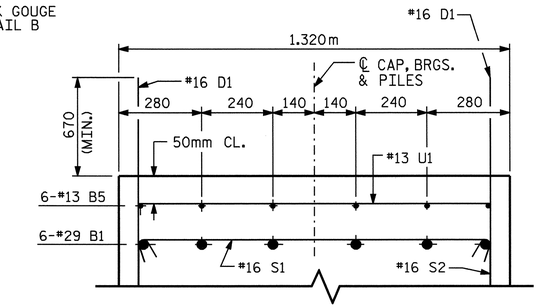

PARTIAL SECTION B-B

BAR TYPES

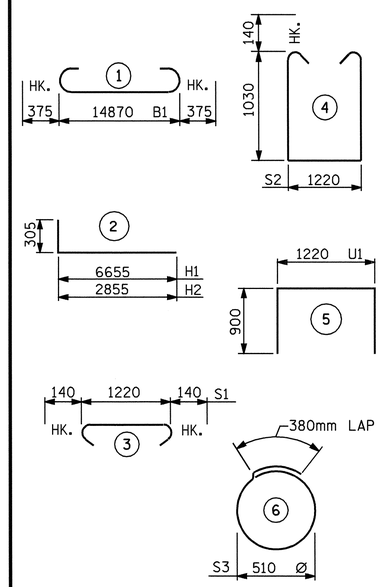

ALL BAR DIMENSIONS ARE OUT TO OUT.

BILL OF MATERIAL
END BENT 2

BAR	NO.	SIZE	TYPE	LENGTH	WEIGHT
B1	12	#29	1	15620	948
B2	4	#16	STR	14800	92
B3	8	#13	STR	7760	62
B4	18	#13	STR	2160	39
B5	6	#13	STR	4040	24
B6	13	#13	STR	1220	16
D1	94	#16	STR	2060	301
H1	8	#32	2	6960	357
H2	10	#19	2	3160	71
S1	46	#16	3	1500	107
S2	46	#16	4	3560	254
S3	48	#13	6	1980	94
U1	29	#13	5	3020	87
V1	12	#16	STR	2140	40
V2	36	#25	STR	2700	386

REINFORCING STEEL = 2878 KG

CLASS A CONCRETE BREAKDOWN

CAP & LOWER WINGS 28.7 M3

TOTAL CONCRETE BREAKDOWN 28.7 M3

HP 310 X 79 STEEL PILES
NO. 12 180.0 METERS

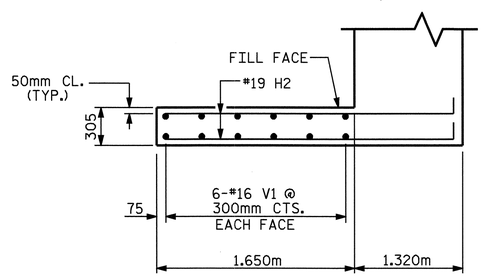

PLAN OF WING W3

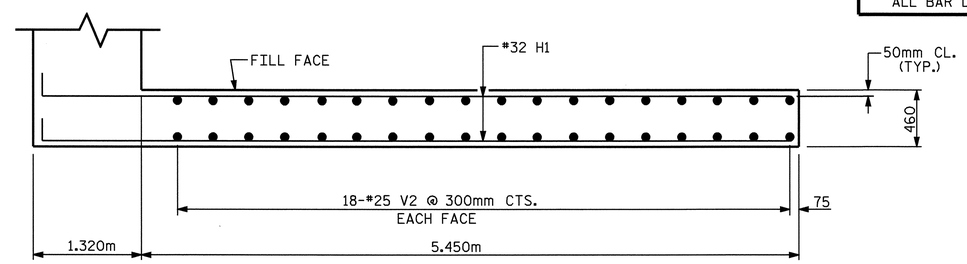

PLAN OF WING W4

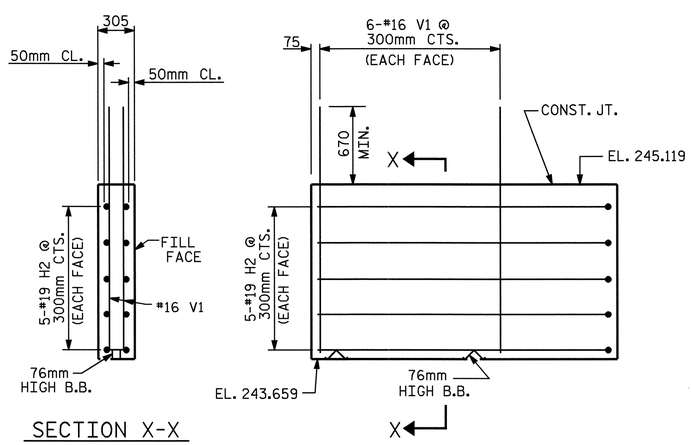

ELEVATION OF WING W3

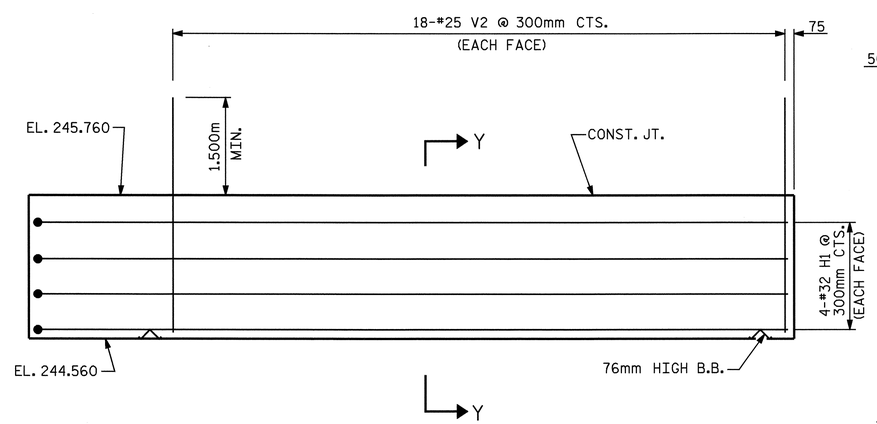

ELEVATION OF WING W4

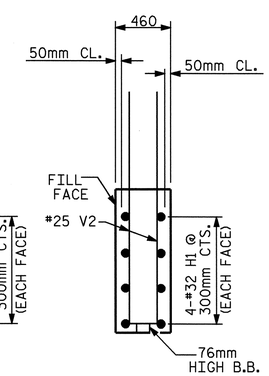

SECTION Y-Y

PROJECT NO. R-0609IA
GUILFORD COUNTY
STATION: 54+36.375 -L-

SHEET 2 OF 2

STATE OF NORTH CAROLINA
DEPARTMENT OF TRANSPORTATION
RALEIGH

SUBSTRUCTURE
END BENT 2

NORTH CAROLINA PROFESSIONAL SEAL 23926 ENGINEER BRIAN C. HANKS
5/22/06

REVISIONS						SHEET NO.
NO.	BY:	DATE:	NO.	BY:	DATE:	S-259
1			3			TOTAL SHEETS
2			4			321

DRAWN BY : QT NGUYEN DATE : 2-05
CHECKED BY : RW WRIGHT DATE : 4-05

NOTES

SLOPE PROTECTION SHALL BE PLACED UNDER THE ENDS OF THE BRIDGE AS SHOWN IN THE DETAILS. METHOD OF MEASUREMENT AND BASIS OF PAYMENT SHALL BE AS PRESCRIBED IN SECTION 462 OF THE STANDARD SPECIFICATIONS. FOR BERM WIDTH, SEE GENERAL DRAWING.

SLOPE PROTECTION SHALL CONSIST OF 100mm POURED-IN-PLACE CONCRETE PAVING AS SHOWN IN THE DETAILS ON THIS SHEET. CONCRETE SHALL BE CLASS "B". THE CONCRETE SURFACE SHALL BE FLOATED WITH A WOODEN FLOAT AND FINISHED. WELDED WIRE FABRIC REINFORCING SHALL BE 152 X 152 - W9.1 X W9.1, 1520mm WIDE. SLOPE PROTECTION SHALL BE POURED IN 1520mm STRIPS AS SHOWN IN THE "POURING DETAIL" WITH 600mm LONG #13 BARS PLACED ALONG THE SLOPE BETWEEN STRIPS AT 450mm MAXIMUM SPACING. SLOPE PROTECTION MAY BE POURED IN ALTERNATE 1220mm AND 1520mm STRIPS AS SHOWN IN THE "OPTIONAL POURING DETAIL" WITH ADJACENT RUNS OF WELDED WIRE FABRIC LAPPING AT LEAST 152mm. THE COST OF THE WELDED WIRE FABRIC AND #13 BARS, IF USED, SHALL BE INCLUDED IN THE CONTRACT UNIT PRICE BID PER SQUARE METER FOR SLOPE PROTECTION.

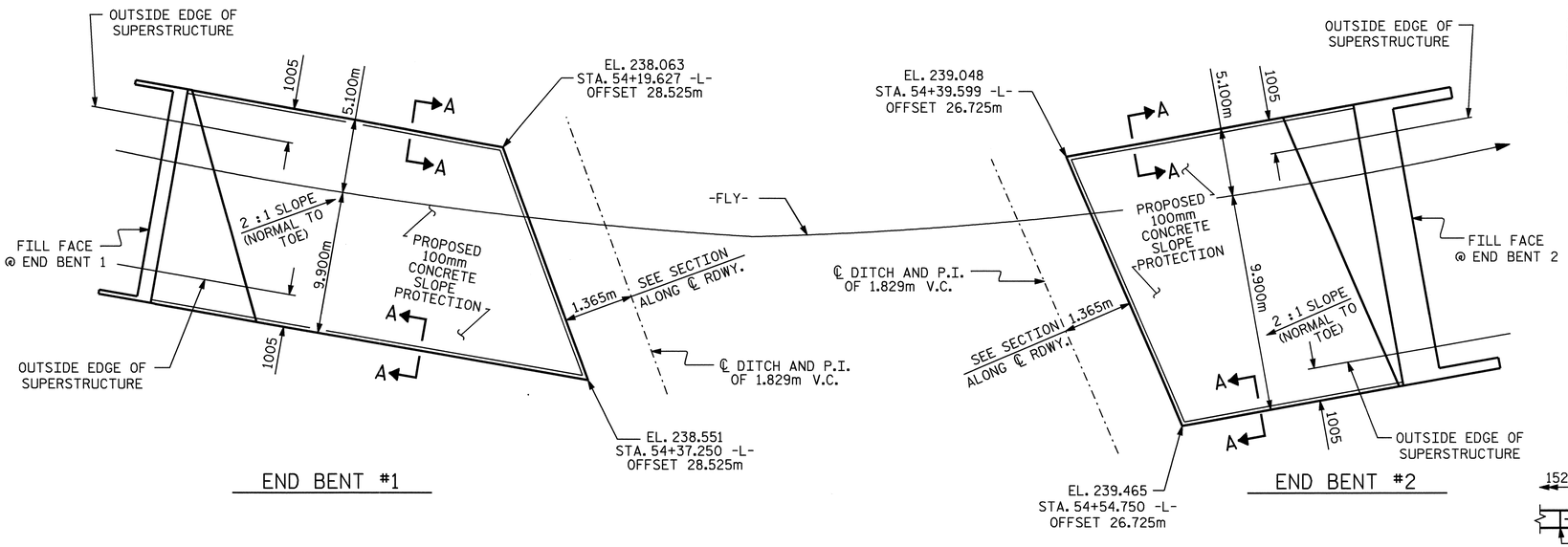

PLAN OF SLOPE PROTECTION

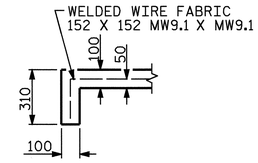

SECTION A-A

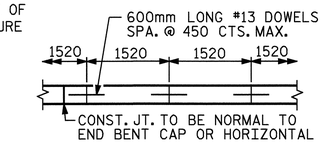

STRIP WIDTHS MAY VARY IN CURVED PORTION.

POURING DETAIL

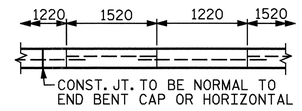

POUR A 1220mm STRIP FIRST. STRIP WIDTHS MAY VARY IN CURVED PORTION.

OPTIONAL POURING DETAIL

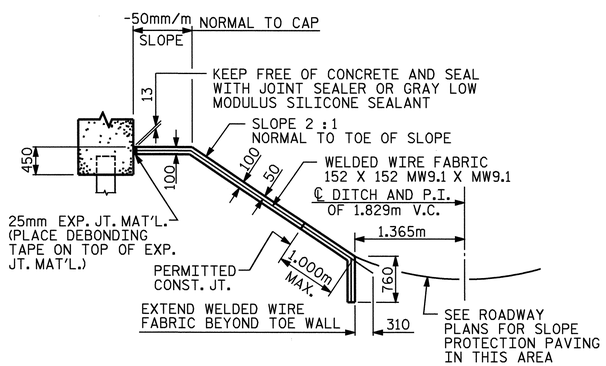

SECTION ALONG ℄ ROADWAY WHEN FILL CATCHES IN DITCH

BRIDGE @ STA. 54+36.375 -L-	100mm SLOPE PROTECTION	* WELDED WIRE FABRIC 1520mm WIDE
	SQUARE METERS	APPROX. METERS
END BENT 1	430	360
END BENT 2	240	200

* QUANTITY SHOWN IS BASED ON 1520mm POURS.

PROJECT NO. R-0609IA
GUILFORD COUNTY
STATION: 54+36.375 -L-

STATE OF NORTH CAROLINA
DEPARTMENT OF TRANSPORTATION
RALEIGH

STANDARD
SLOPE PROTECTION
DETAILS

NORTH CAROLINA PROFESSIONAL SEAL 23926 ENGINEER BRIAN C. HAWKINS
5/22/06

REVISIONS								SHEET NO.
NO.	BY:	DATE:	NO.	BY:	DATE:			S-260
1			3					TOTAL SHEETS
2			4					321

ASSEMBLED BY : J.L. WALTON	DATE : 10/12/04		
CHECKED BY : W.F. PARKER	DATE : 1/28/05		
DRAWN BY : ELR 5/92	REV. 10/17/00	RWW/LES	
CHECKED BY : GRP 6/92	REV. 7/10/01	LES/RDR	
	REV. 5/7/03	RWW/JTE	

15-MAY-2006 12:06
J:\STRUCT~1\frye\FINAL_~1\Str8\R0609IA_sd_SP_08.dgn
rwwright

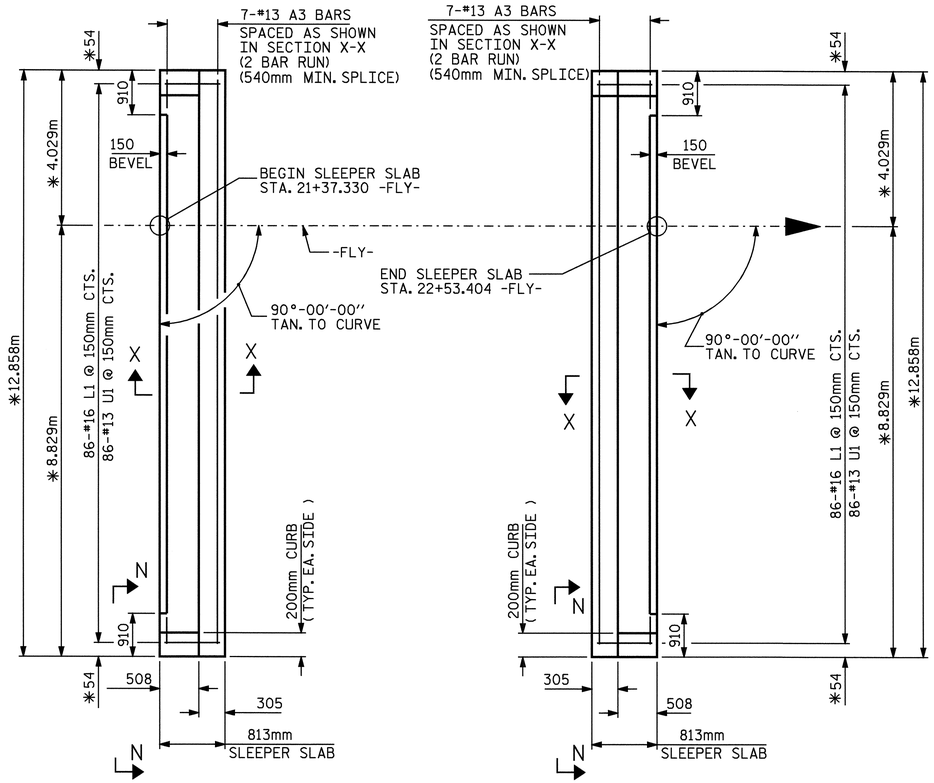

PLAN OF SLEEPER SLAB

✳ MEASURED RADIALLY

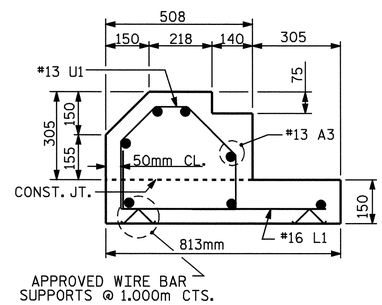

SECTION X-X

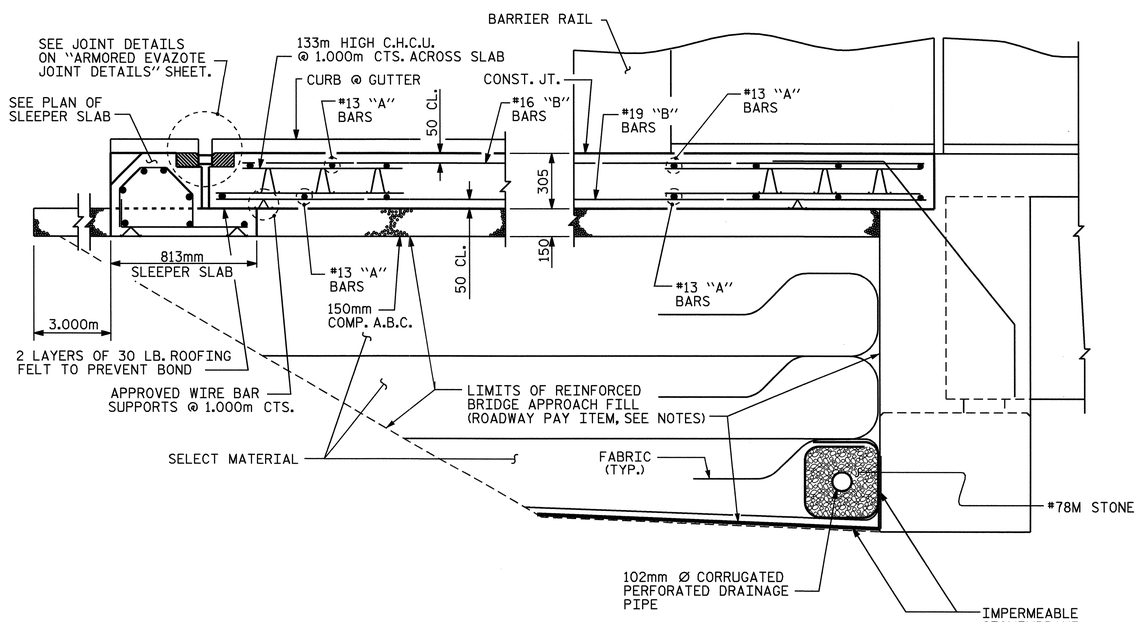

SECTION THRU SLAB

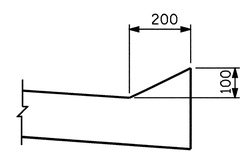

VIEW N-N

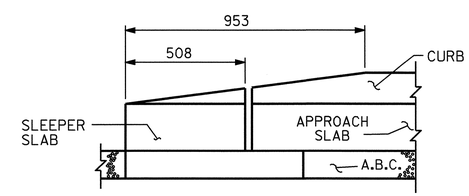

END OF CURB WITHOUT
SHOULDER BERM GUTTER

CURB DETAILS

NOTES

THE COST OF THE BARRIER RAIL ON THE APPROACH SLAB SHALL BE INCLUDED IN THE LUMP SUM CONTRACT PRICE BID FOR BRIDGE APPROACH SLABS.

APPROACH SLAB SHALL NOT BE CONSTRUCTED PRIOR TO COMPLETION OF THE BRIDGE DECK.

FOR REINFORCED BRIDGE APPROACH FILL INCLUDING FABRIC, IMPERMEABLE GEOMEMBRANE, 102mm Ø DRAINAGE PIPE, #78M STONE, AND SELECT MATERIAL, SEE ROADWAY PLANS.

TEMPORARY DRAINAGE AND TEMPORARY BERM AND SLOPE DRAINS WILL BE PAID FOR UNDER THE LUMP SUM PRICE FOR BRIDGE APPROACH SLAB.

AREA BETWEEN THE WINGWALL AND APPROACH SLAB SHALL BE GRADED TO DRAIN THE WATER AWAY FROM THE FILL FACE OF THE BRIDGE.

THE 150mm COMP. A.B.C. SHALL EXTEND 3.000m BEYOND THE END OF THE SLEEPER SLAB AND 300mm OUTSIDE OF EACH EDGE OF THE SLEEPER SLAB. THIS MATERIAL ALSO SHALL BE PLACED BETWEEN THE SLEEPER SLAB AND THE ABUTMENT AND 300mm OUTSIDE OF EACH EDGE OF THE APPROACH SLAB.

THE CONTRACTOR MAY USE 100mm TYPE B-25.0B ASPHALT CONCRETE BASE COURSE IN LIEU OF 150mm COMP. A.B.C. IF THIS OPTION IS USED, THE BASE COURSE SHALL EXTEND 300mm BEYOND THE END OF THE SLEEPER SLAB AND THE WIDTH SHALL BE THE SAME AS THAT OF THE SLEEPER SLAB. THIS MATERIAL ALSO SHALL BE PLACED BETWEEN THE SLEEPER SLAB AND THE ABUTMENT AND THE WIDTH SHALL BE THE SAME AS THAT OF THE APPROACH SLAB.

THE CONTRACTOR MAY USE 125mm CLASS "A" CONCRETE BASE IN LIEU OF 150mm COMP. A.B.C. IF THIS OPTION IS USED, THE CONCRETE BASE SHALL EXTEND 300mm BEYOND THE END OF THE SLEEPER SLAB AND THE WIDTH SHALL BE THE SAME AS THAT OF THE SLEEPER SLAB. THIS MATERIAL ALSO SHALL BE PLACED BETWEEN THE SLEEPER SLAB AND THE ABUTMENT AND THE WIDTH SHALL BE THE SAME AS THAT OF THE APPROACH SLAB. THE CONCRETE SHALL BE FINISHED TO A SMOOTH SURFACE AND A LAYER OF 13.6 Kg. ROOFING FELT SHALL BE PLACED BETWEEN THE CONCRETE BASE AND THE APPROACH SLAB TO PREVENT BOND. THE APPROACH SLAB SHALL NOT BE CAST UNTIL THE CONCRETE BASE HAS REACHED AN AGE OF THREE CURING DAYS.

BILL OF MATERIAL

FOR ONE APPROACH SLAB (2 REQ'D)

BAR	NO.	SIZE	TYPE	LENGTH	WEIGHT
✳A1	54	#13	STR	6760	363
A2	54	#13	STR	6660	357
✳A3	14	#13	STR	6700	93
✳B1	172	#16	STR	4340	1159
B2	172	#19	STR	4600	1768
✳B3	14	#16	STR	3560	77
✳B4	2	#16	3	1940	6
L1	86	#16	1	900	120
✳S1	50	#16	STR	980	76
✳S2	50	#16	1	1220	95
✳S3	20	#16	2	680	21
✳U1	86	#13	4	1240	106

REINFORCING STEEL = 2245 KG

✳EPOXY COATED REINF. STEEL = 1890 KG

CLASS AA CONCRETE BREAKDOWN

POUR 1	SLEEPER SLAB AND CURB	3.6 C.M.
POUR 2	SLAB AND CURB	30.8 C.M.
POUR 3	RAIL	1.6 C.M.
CLASS AA CONCRETE		36.0 C.M.

BAR TYPES

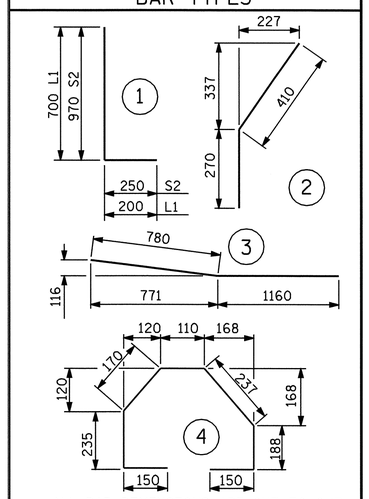

ALL BAR DIMENSIONS ARE OUT TO OUT

PROJECT NO. R-0609IA

GUILFORD COUNTY

STATION: 54+36.375 -L-

SHEET 1 OF 4

STATE OF NORTH CAROLINA
DEPARTMENT OF TRANSPORTATION
RALEIGH

BRIDGE APPROACH SLAB FOR FLEXIBLE PAVEMENT WITH BARRIER RAIL

NORTH CAROLINA PROFESSIONAL SEAL 23926 ENGINEER BRIAN C. HAWKS
5/22/06

REVISIONS							SHEET NO.
NO.	BY:	DATE:	NO.	BY:	DATE:		S-261
1			3				TOTAL SHEETS
2			4				321

DRAWN BY : J. L. WALTON DATE : 5/23/05
CHECKED BY : R. W. WRIGHT DATE : 6-6-05

15-MAY-2006 12:06
J:\STRUCT~1\frye\FINAL_~1\Str8\R0609IA_sd_AS_08.dgn
rwwright

STR. #8

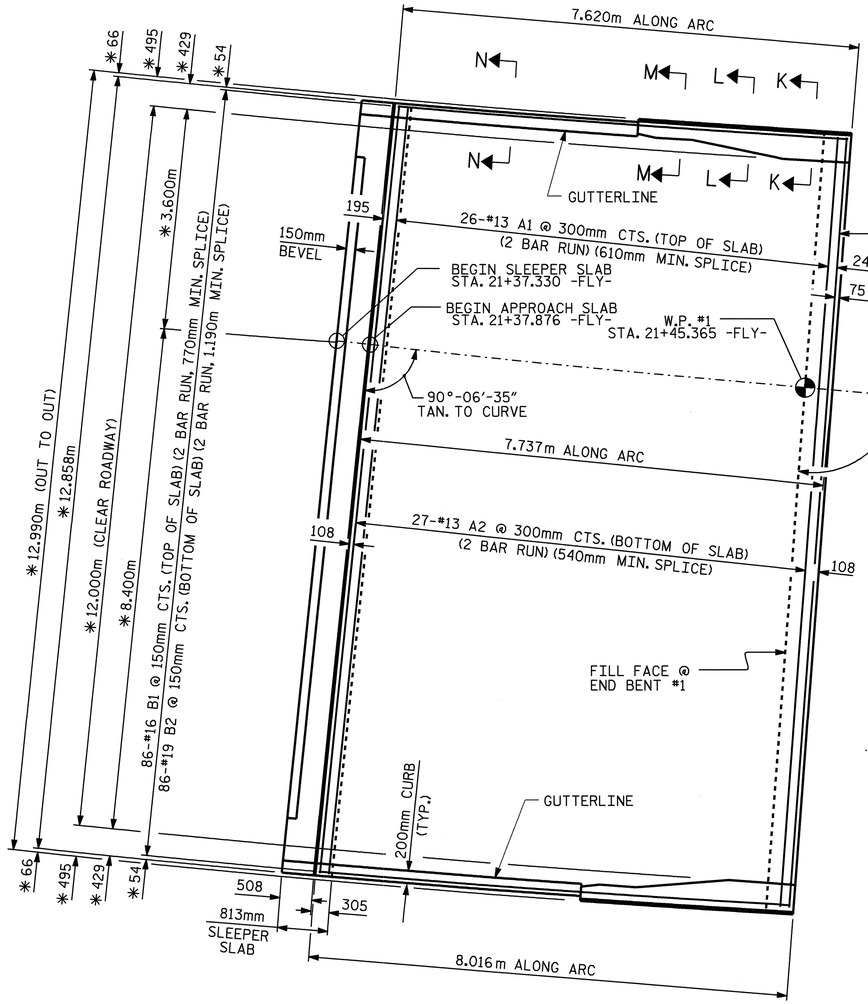

PLAN @ END BENT #1

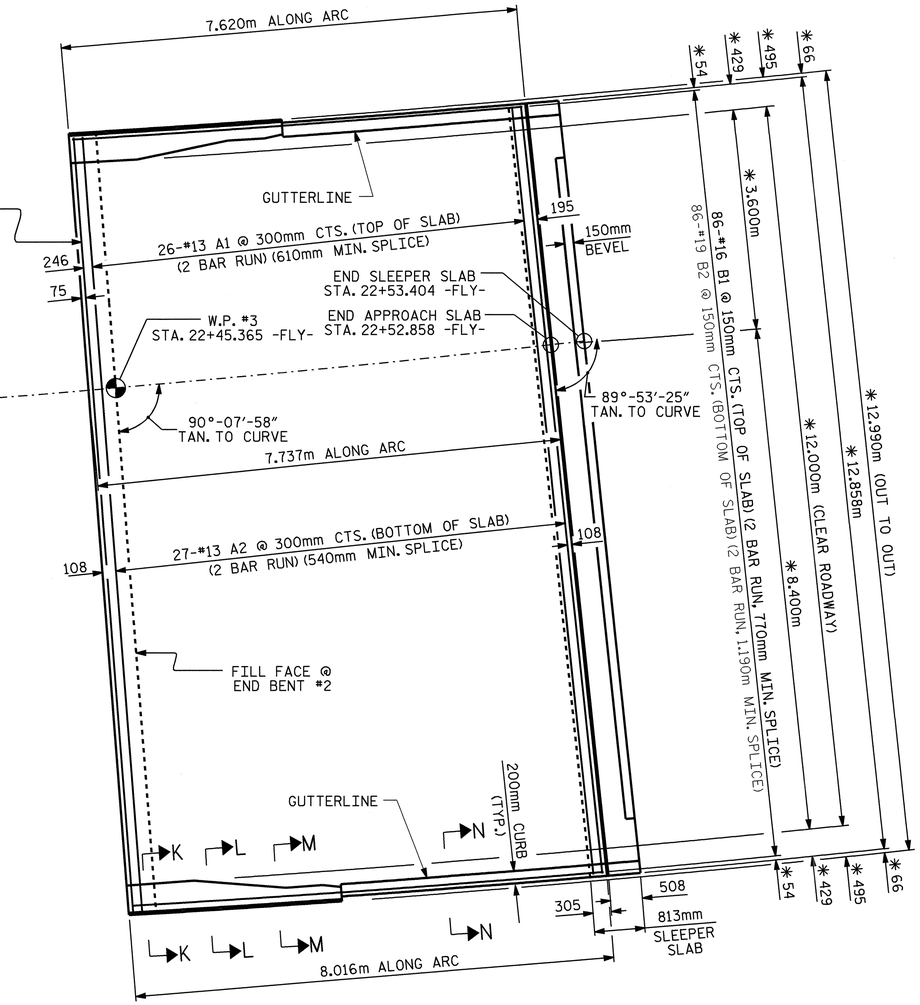

PLAN @ END BENT #2

✳ MEASURED RADIALLY

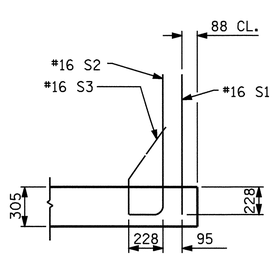

SECTION K-K

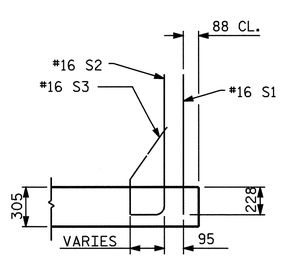

SECTION L-L

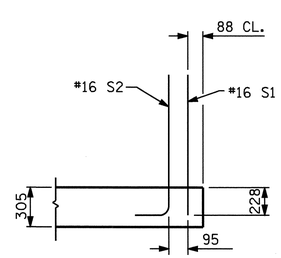

SECTION M-M

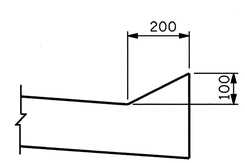

SECTION N-N

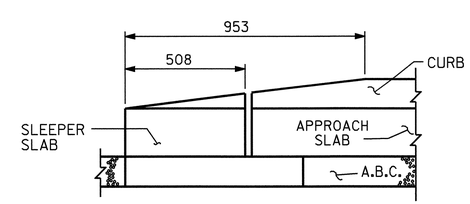

END OF CURB WITHOUT SHOULDER BERM GUTTER

CURB DETAILS

PROJECT NO. R-0609IA
GUILFORD COUNTY
STATION: 54+36.375 -L-

SHEET 2 OF 4

STATE OF NORTH CAROLINA
DEPARTMENT OF TRANSPORTATION
RALEIGH

BRIDGE APPROACH SLAB FOR FLEXIBLE PAVEMENT WITH BARRIER RAIL

NORTH CAROLINA PROFESSIONAL SEAL 23926 ENGINEER BRIAN C. HANKS
5/22/06

REVISIONS								SHEET NO.
NO.	BY:	DATE:	NO.	BY:	DATE:			S-262
1			3					TOTAL SHEETS
2			4					321

DRAWN BY : J.L. WALTON DATE : 5/19/05
CHECKED BY : R.W. WRIGHT DATE : 11-2-05

15-MAY-2006 12:06
J:\STRUCT~1\frye\FINAL_~1\Str8\R0609IA_sd_AS_08.dgn
rwwright

STR #8

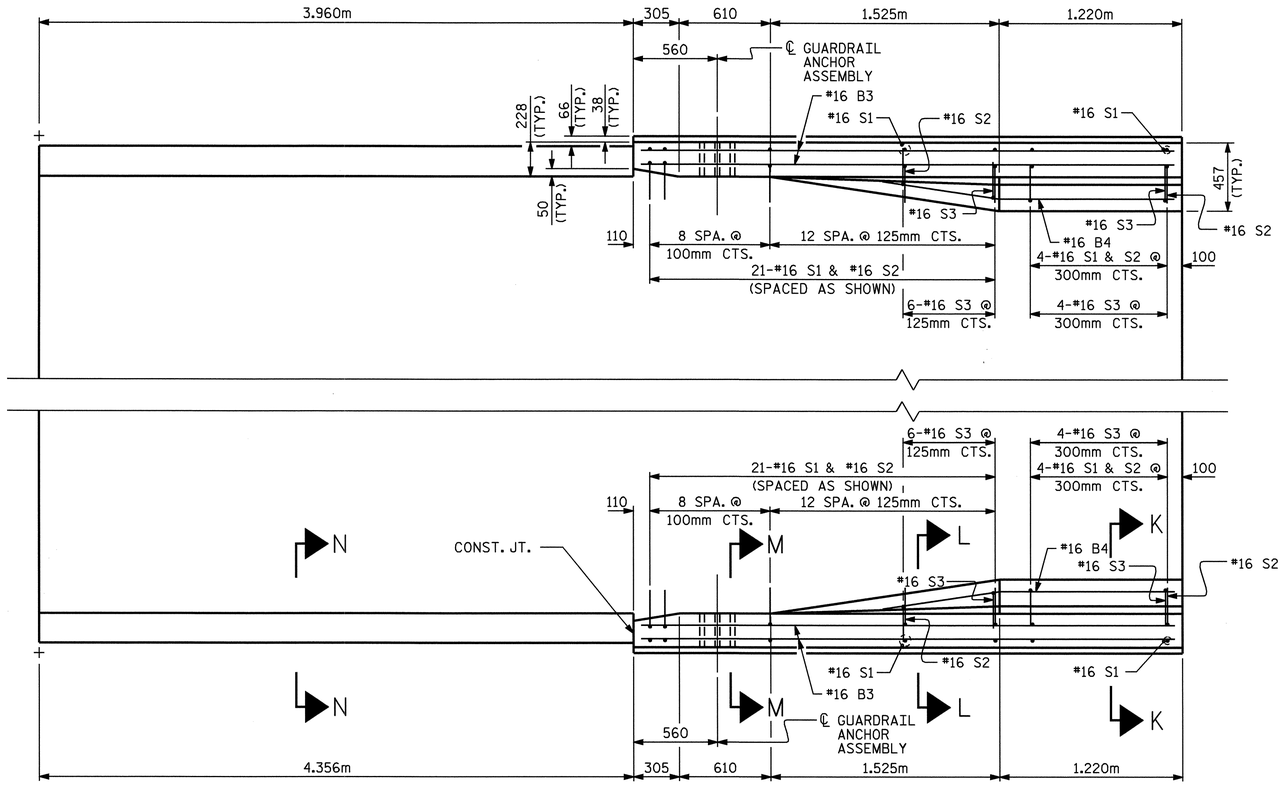

PLAN

BEGIN APPROACH SLAB SHOWN, END APPROACH SLAB SIMILAR

NOTES

THE GUARDRAIL ANCHOR ASSEMBLY SHALL CONSIST OF A 6mm HOLD DOWN PLATE AND 7 - 22.23mm Ø BOLTS WITH NUTS AND WASHERS.

THE HOLD-DOWN PLATE SHALL CONFORM TO AASHTO M270 GRADE 250. AFTER FABRICATION, THE HOLD-DOWN PLATE SHALL BE GALVANIZED IN ACCORDANCE WITH AASHTO M111.

BOLTS SHALL CONFORM TO THE REQUIREMENTS OF ASTM A307 AND NUTS SHALL CONFORM TO THE REQUIREMENTS OF AASHTO M291M. BOLTS, NUTS AND WASHERS SHALL BE GALVANIZED. AT THE CONTRACTOR'S OPTION, STAINLESS STEEL BOLTS, NUTS AND WASHERS MAY BE USED AS AN ALTERNATE FOR THE 22.23mm Ø GALVANIZED BOLTS, NUTS AND WASHERS. THEY SHALL CONFORM TO OR EXCEED THE MECHANICAL REQUIREMENTS OF ASTM A307. THE USE OF THIS ALTERNATE SHALL BE APPROVED BY THE ENGINEER.

AFTER INSTALLATION, THE EXPOSED THREAD OF THE BOLT SHALL BE BURRED WITH A SHARP POINTED TOOL.

THE COST OF THE GUARDRAIL ANCHOR ASSEMBLIES WITH BOLTS, NUTS AND WASHERS COMPLETE IN PLACE, SHALL BE INCLUDED IN THE LUMP SUM CONTRACT PRICE BID FOR BRIDGE APPROACH SLABS.

THE 32mm Ø HOLES SHALL BE FORMED OR DRILLED WITH A CORE BIT. IMPACT TOOLS WILL NOT BE PERMITTED. ANY CONCRETE DAMAGED BY THIS WORK SHALL BE REPAIRED TO THE SATISFACTION OF THE ENGINEER.

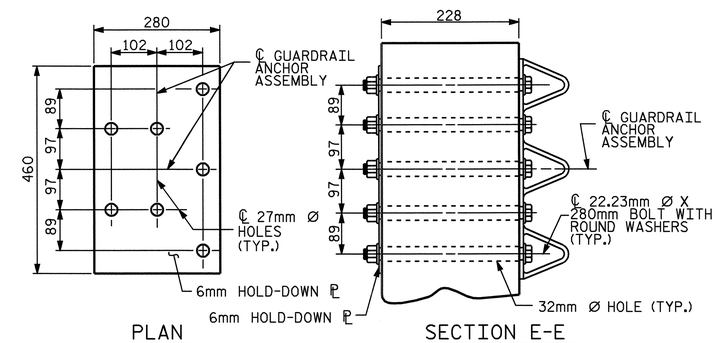

PLAN

SECTION E-E

GUARDRAIL ANCHOR ASSEMBLY DETAILS

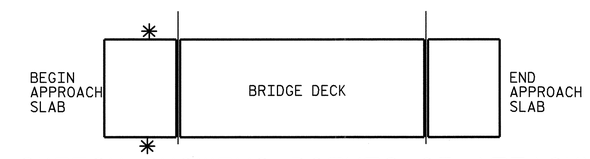

SKETCH SHOWING POINTS OF ATTACHMENT

✱ INDICATES POINTS OF ATTACHMENT

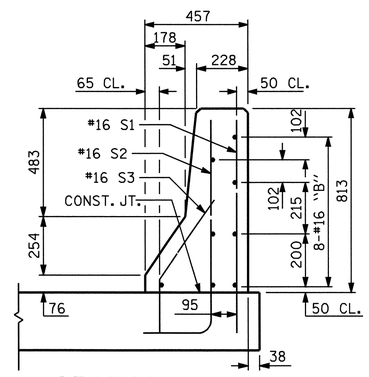

SECTION K-K

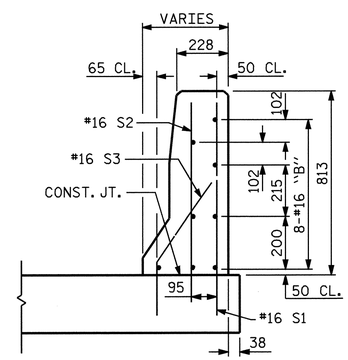

SECTION L-L

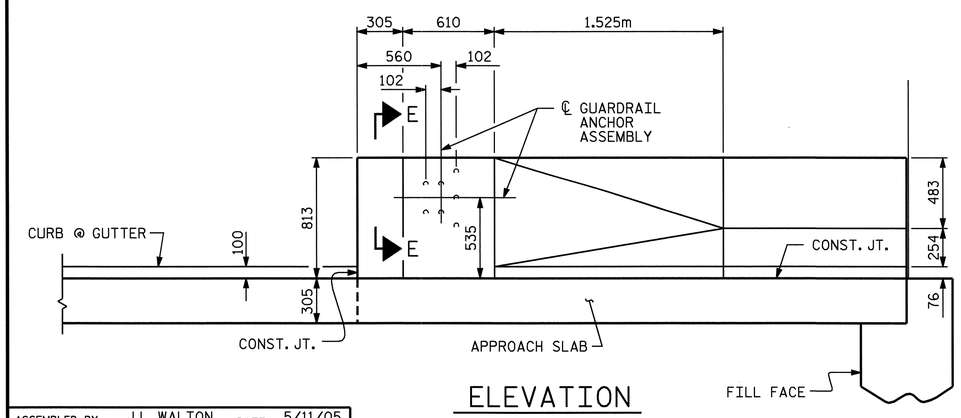

ELEVATION

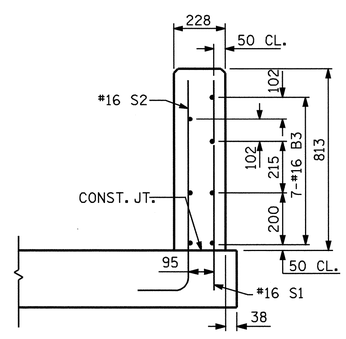

SECTION M-M

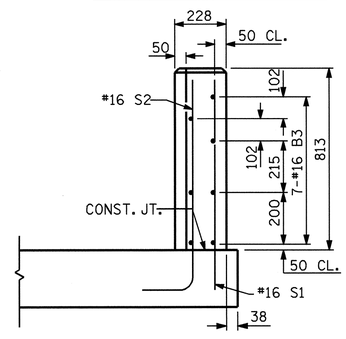

END VIEW

PROJECT NO. R-0609IA

GUILFORD COUNTY

STATION: 54+36.375 -L-

SHEET 3 OF 4

STATE OF NORTH CAROLINA
DEPARTMENT OF TRANSPORTATION
RALEIGH

BRIDGE APPROACH SLAB DETAILS FOR FLEXIBLE PAVEMENT WITH BARRIER RAIL

NORTH CAROLINA PROFESSIONAL SEAL 23926 ENGINEER BRIAN C. HANKS
5/22/06

REVISIONS						SHEET NO.
NO.	BY:	DATE:	NO.	BY:	DATE:	S-263
1			3			TOTAL SHEETS
2			4			321

ASSEMBLED BY : J.L. WALTON DATE : 5/11/05
CHECKED BY : R. W. WRIGHT DATE : 11-2-05

15-MAY-2006 12:05
J:\STRUCT~1\frye\FINAL_~1\Str8\R0609IA_sd_AS_08.dgn
rwwright

STR #8

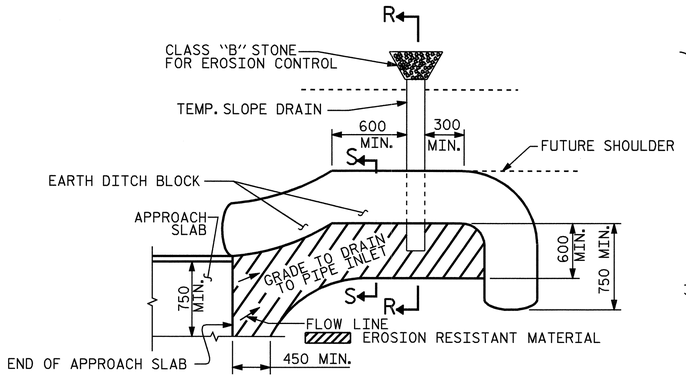

NOTE: IMMEDIATELY AFTER THE CONSTRUCTION OF THE APPROACH SLAB, THE CONTRACTOR SHALL PROVIDE TEMPORARY BERM AND SLOPE DRAIN. CONTRACTOR SHALL GRADE TO PIPE INLET AND PROVIDE EROSION RESISTANT MATERIAL AS SHOWN. THE EROSION RESISTANT MATERIAL SHALL BE EITHER 1) ASPHALT PLANT MIX, TYPE 1 OR TYPE 2, MIN. 50mm DEPTH, 2) EROSION CONTROL MAT, OR 3) CONCRETE, AS DIRECTED BY THE ENGINEER. THE SLOPE DRAIN SHALL CONSIST OF A NON-PERFORATED TEMPORARY DRAINAGE PIPE, 305mm IN DIAMETER.

PLAN VIEW

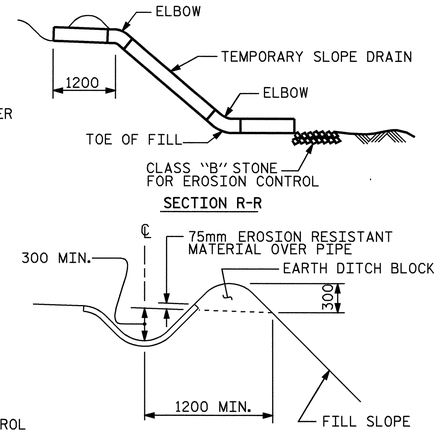

SECTION S-S

TEMPORARY BERM AND SLOPE DRAIN DETAILS

(TO BE USED WHEN SHOULDER BERM GUTTER IS REQUIRED)

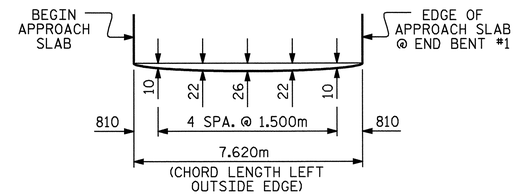

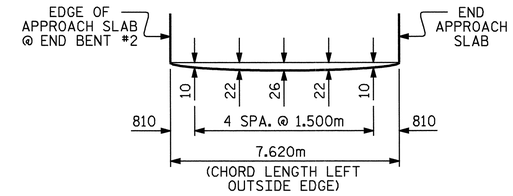

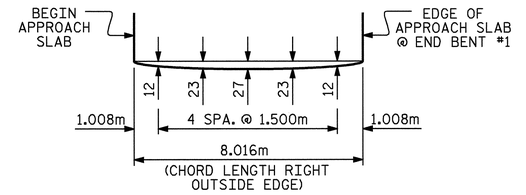

ARC OFFSETS @ END BENT #1

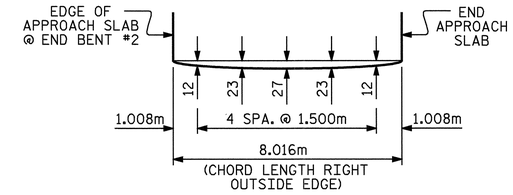

ARC OFFSETS @ END BENT #2

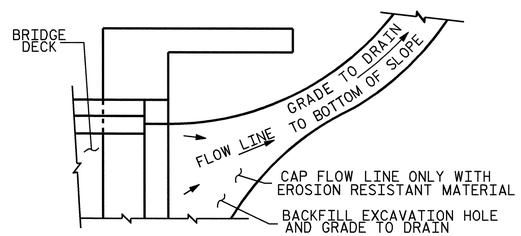

NOTE: IF THE APPROACH SLAB IS NOT CONSTRUCTED IMMEDIATELY AFTER THE BACKFILLING OF THE END BENT EXCAVATION, GRADE TO DRAIN TO THE BOTTOM OF THE SLOPE AND PROVIDE EROSION RESISTANT MATERIAL, SUCH AS FIBERGLASS ROVING OR AS DIRECTED BY THE ENGINEER TO PREVENT SOIL EROSION AND TO PROTECT THE AREA ADJACENT TO THE STRUCTURE. THE CONTRACTOR WILL BE REQUIRED TO REMOVE THESE MATERIALS PRIOR TO CONSTRUCTION OF THE APPROACH SLAB.

TEMPORARY DRAINAGE DETAIL

PROJECT NO. R-0609IA
GUILFORD COUNTY
STATION: 54+36.375 -L-

SHEET 4 OF 4

STATE OF NORTH CAROLINA
DEPARTMENT OF TRANSPORTATION
RALEIGH

BRIDGE APPROACH SLAB DETAILS

NORTH CAROLINA PROFESSIONAL SEAL 23926 ENGINEER BRIAN C. HAINKS
5/22/06

REVISIONS						SHEET NO.
NO.	BY:	DATE:	NO.	BY:	DATE:	S-264
1			3			TOTAL SHEETS
2			4			321

ASSEMBLED BY : J.L. WALTON DATE : 5/11/05
CHECKED BY : R. W. WRIGHT DATE : 11-2-05

15-MAY-2006 12:05
J:\STRUCT~1\frye\FINAL_~1\Str8\R0609IA_sd_AS_08.dgn
rwwright

STR #8

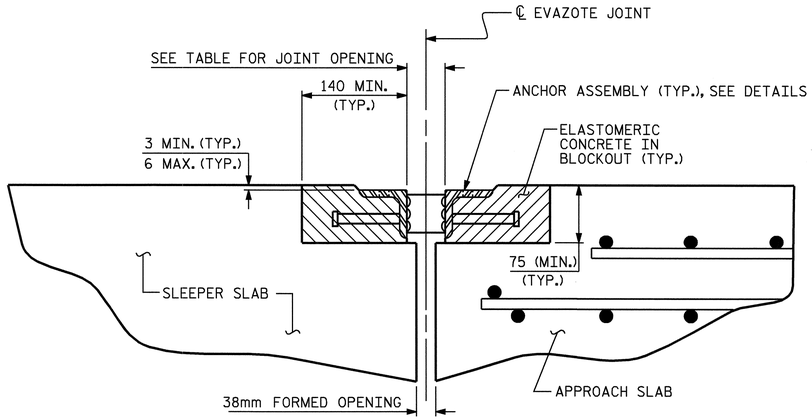

ARMORED JOINT DETAILS

SECTION NORMAL TO JOINT AT APPROACH SLAB

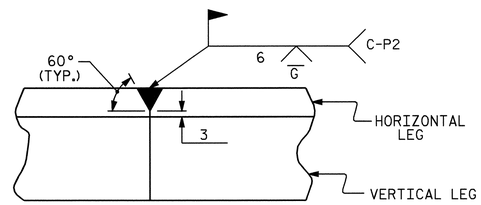

DETAIL- FIELD WELD SPLICE OF ANGLE

NOTES

ANGLES SHALL CONFORM TO AASHTO M270 GRADE 250 STEEL OR APPROVED EQUAL. ALL STUD ANCHORS SHALL CONFORM TO AASHTO M169 GRADES 1010 THRU 1020 OR APPROVED EQUAL.

STUD ANCHORS SHALL BE SHOP WELDED AND ALL HOLES SHALL BE SHOP DRILLED AS SHOWN ON THE PLANS. STUD ANCHORS SHALL BE ELECTRIC ARC END WELDED WITH COMPLETE FUSION.

UPON COMPLETION OF SHOP FABRICATION, THE ENTIRE ANCHOR ASSEMBLY SHALL BE METALLIZED. THE 12.70mm Ø STUD ANCHORS AND ANCHOR TABS NEED NOT BE METALLIZED. SEE SPECIAL PROVISION FOR THERMAL SPRAYED COATINGS (METALLIZATION).

ANCHOR ASSEMBLY SHALL BE MADE CONTINUOUS THE LENGTH OF THE JOINT FROM GUTTER TO GUTTER. FOR FIELD SPLICES AT ALL CROWN BREAK POINTS, THE ENDS OF THE STEEL ANGLES SHALL BE CUT PARALLEL TO THE BRIDGE CENTERLINE. FINISHED FIELD WELDS SHALL BE GROUND SMOOTH AND COATED WITH A MINIMUM THICKNESS OF 0.100mm OF ZINC-RICH PAINT IN ACCORDANCE WITH THE STANDARD SPECIFICATIONS.

ANCHOR ASSEMBLY SEGMENTS SHALL NOT BE LESS 3.6m NOR MORE THAN 6.1m IN LENGTH. SHORTER SEGMENTS MAY BE USED AT THE EDGE OF ROADWAY OR AT POINTS OF STAGED CONSTRUCTION.

THE ANCHOR ASSEMBLY SHALL BE SECURED AND LEVELED AS SHOWN IN THE "ARMORED JOINT ANCHOR ASSEMBLY DETAILS". NO SUBMITTALS ARE REQUIRED FOR 9.53mm Ø EXPANSION ANCHORS, NUTS OR WASHERS. THE CONTRACTOR MAY SUBMIT FOR APPROVAL AN ALTERNATE METHOD OF ALIGNING AND LEVELING THE ANGLES. THE ALTERNATE METHOD SHALL NOT INCLUDE ANY WELDING TO THE OUTSIDE FACE OF THE ANGLES.

AFTER THE ELASTOMERIC CONCRETE HAS BEEN CAST ON BOTH SIDES OF THE JOINT, REMOVE ANY EXCESS CONCRETE THAT COMES THROUGH THE WEEP HOLES AND THOROUGHLY CLEAN THE ANGLES. ANY DAMAGED STEEL SHALL BE COATED WITH A MINIMUM OF 0.100mm OF ZINC-RICH PAINT IN ACCORDANCE WITH THE STANDARD SPECIFICATIONS.

SEE SPECIAL PROVISIONS FOR EVAZOTE JOINT SEALS.

SEE SPECIAL PROVISIONS FOR ELASTOMERIC CONCRETE.

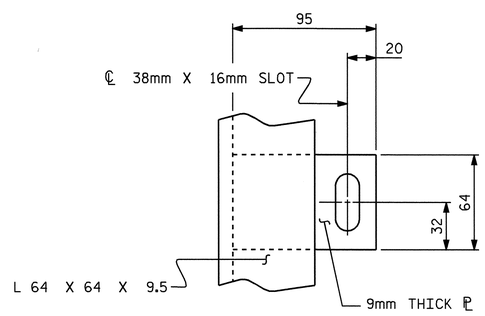

PLAN VIEW OF TAB

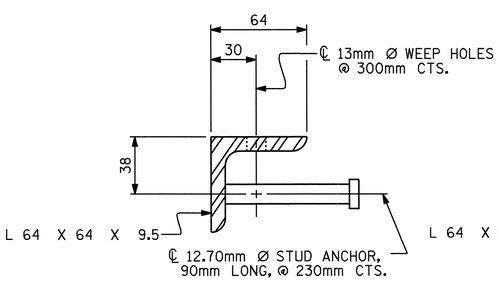

SECTION VIEW OF STUD

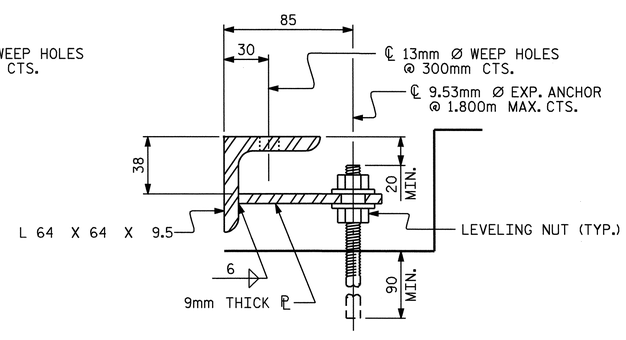

SECTION VIEW OF TAB

ARMORED JOINT ANCHOR ASSEMBLY DETAILS

MOVEMENT AND SETTING AT EVAZOTE JOINT

APPROACH SLAB NO.	SKEW ANGLE	NOMINAL UNCOMPRESSED SEAL WIDTH	TOTAL MOVEMENT (ALONG ℄ RDWY)	PERPENDICULAR JOINT OPENING AT 7° C	PERPENDICULAR JOINT OPENING AT 16° C	PERPENDICULAR JOINT OPENING AT 32° C
1	90°-00'-00"	87mm	42mm	72mm	65mm	53mm
2	90°-00'-00"	87mm	42mm	72mm	65mm	53mm

TOTAL MOVEMENT IS CALCULATED ALONG THE CENTERLINE OF ROADWAY.
JOINT OPENINGS ARE MEASURED PERPENDICULAR TO THE JOINT.

BILL OF MATERIAL

APPROACH SLAB NO.	ELASTOMERIC CONCRETE ✳ (CU. m)	TOTAL LENGTH OF ANGLE (m)
1	0.3	24.100m
2	0.3	24.100m

✳ BASED ON THE MINIMUM BLOCKOUT SHOWN.

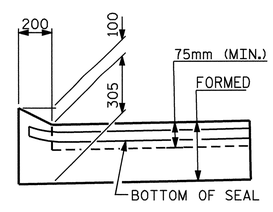

SECTION A-A

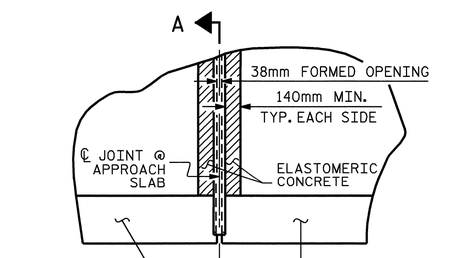

PLAN

PROJECT NO. R-0609IA
GUILFORD COUNTY
STATION: 54+36.375 -L-

STATE OF NORTH CAROLINA
DEPARTMENT OF TRANSPORTATION
RALEIGH

STANDARD ARMORED EVAZOTE JOINT DETAILS

NORTH CAROLINA PROFESSIONAL SEAL 23926 ENGINEER BRIAN C. HANKS
5/22/06

ASSEMBLED BY : R.W. WRIGHT	DATE : 6-05		
CHECKED BY : B.C. HANKS	DATE : 7-08-05		
DRAWN BY : EEM 1/96	REV. 10/17/00	RWW/LES	
CHECKED BY : RGW 1/96	REV. 7/10/01	LES/RDR	
	REV. 5/7/03RR	RWW/JTE	

REVISIONS								SHEET NO.
NO.	BY:	DATE:	NO.	BY:	DATE:			S-265
1			3					TOTAL SHEETS
2			4					321

STR. #8

STD. NO. AEJ1SM

F.A. PROJECT: STP-NHF-119-1(15)

+3.4131% -2.2514%

PI = STA. 19+23.074 -FLY-
EL. = 255.566
VC = 500

GRADE DATA -FLY-

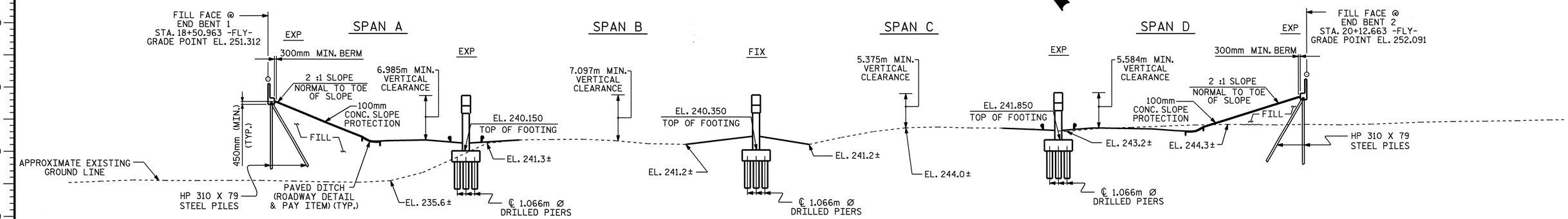

SECTION ALONG -FLY-

(SECTIONS AT BENTS AND END BENTS ARE AT RIGHT ANGLES)

HORIZONTAL CURVE DATA -FLY-

PI = STA. 23+23.787
Δ = 119°-30′-07.6″(LT)
L = 594.426
T = 488.718
R = 285.000

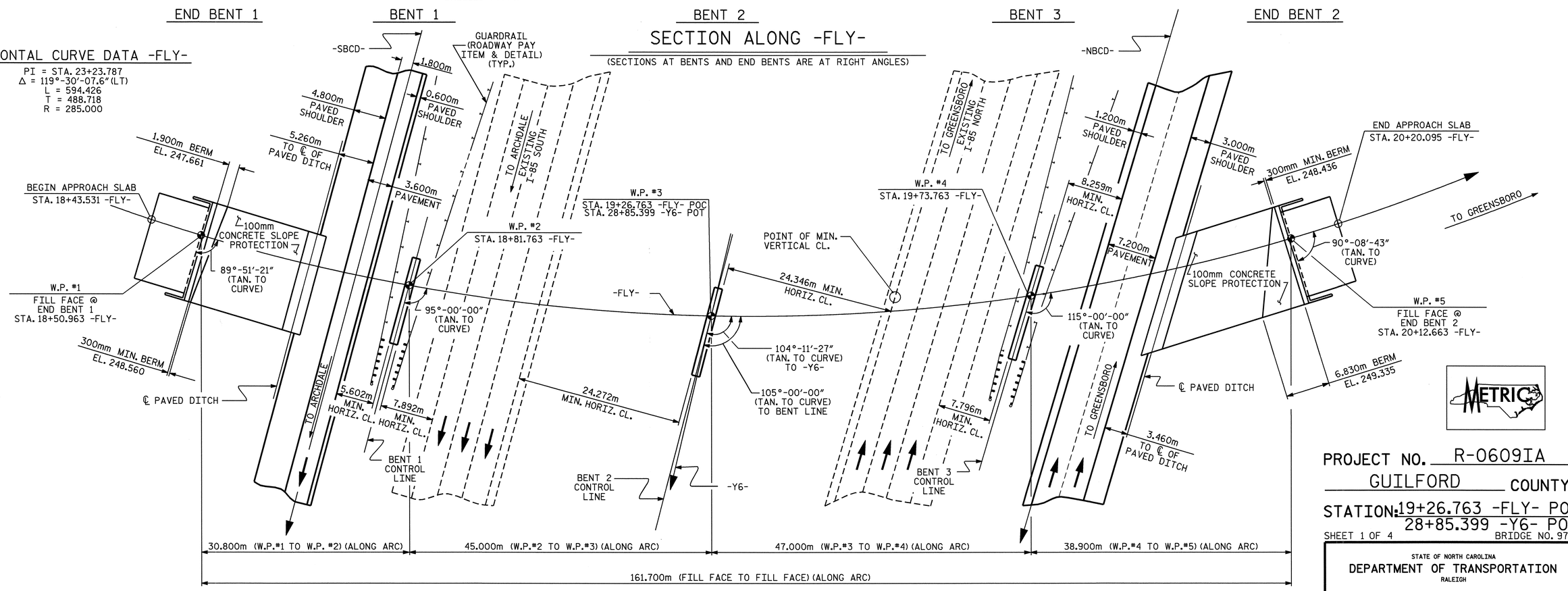

PLAN

(PILES & FOOTINGS NOT SHOWN IN PLAN VIEW FOR CLARITY)

PROJECT NO. R-0609IA
GUILFORD COUNTY
STATION: 19+26.763 -FLY- POC
28+85.399 -Y6- POT

SHEET 1 OF 4 BRIDGE NO. 978

STATE OF NORTH CAROLINA
DEPARTMENT OF TRANSPORTATION
RALEIGH

GENERAL DRAWING FOR FLYOVER BRIDGE OVER I-85 BETWEEN SR 1154 AND I-85

NORTH CAROLINA PROFESSIONAL SEAL 19916 ENGINEER JOHN C. FRYE 5-22-06

NORTH CAROLINA PROFESSIONAL SEAL 23926 ENGINEER BRIAN C. HAMKS 5/22/06

REVISIONS							SHEET NO.
NO.	BY:	DATE:	NO.	BY:	DATE:		S-266
1			3				TOTAL SHEETS
2			4				321

DRAWN BY : D. G. ELY DATE : 7/11/05
CHECKED BY : K. W. ALFORD DATE : 7/25/05

15-MAY-2006 11:54
J:\STRUCT~1\frye\FINAL_~1\Str9\R0609IA_sd_GD_STR.9.dgn
rwwright

STR. #9

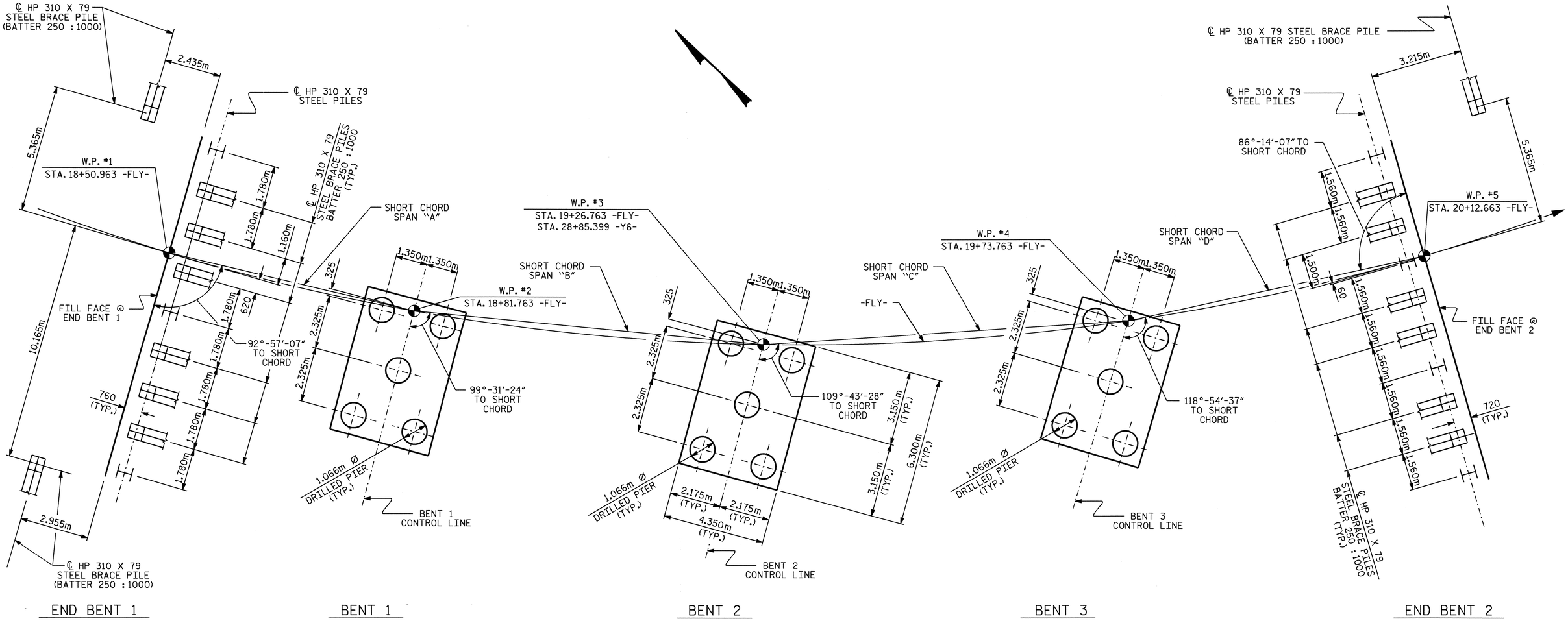

FOUNDATION LAYOUT

(DIMENSIONS LOCATING PILES ARE SHOWN TO THE PILE CENTERLINE)
(DIMENSIONS LOCATING DRILLED PIERS ARE SHOWN TO THE DRILLED PIER CENTERLINE)
(DIMENSIONS LOCATING THE FOOTINGS ARE SHOWN TO THE FOOTING CENTERLINE)

NOTES

PILES FOR END BENT NOS. 1 & 2 SHALL BE DRIVEN TO A MINIMUM BEARING CAPACITY OF 530 kN EACH.

WHEN DRIVING PILES, THE MAXIMUM BLOW COUNT SHALL NOT BE EXCEEDED.

THE DRILLED PIERS FOR BENT NO. 1, BENT NO. 2, AND BENT NO. 3 HAVE BEEN DESIGNED FOR SKIN FRICTION AND TIP BEARING. THE REQUIRED TIP BEARING CAPACITY IS 1700 kPa.

DRILLED PIERS FOR BENT NO. 1, BENT NO. 2, AND BENT NO. 3 HAVE BEEN DESIGNED FOR AN APPLIED LOAD OF 2936 kN, 3380 kN, AND 3114 kN EACH AT THE TOP OF THE PIER.

DRILLED PIERS FOR BENT NO. 1 SHALL EXTEND TO AN ELEVATION NO HIGHER THAN 235.0 AND SATISFY THE REQUIRED TIP BEARING CAPACITY.

DRILLED PIERS FOR BENT NO. 2 SHALL EXTEND TO AN ELEVATION NO HIGHER THAN 231.5 AND SATISFY THE REQUIRED TIP BEARING CAPACITY.

DO NOT START WORK AT BENT NO. 1 UNTIL FILL HAS BEEN PLACED.

DRILLED PIERS FOR BENT NO. 3 SHALL EXTEND TO AN ELEVATION NO HIGHER THAN 235.0 AND SATISFY THE REQUIRED TIP BEARING CAPACITY.

PERMANENT STEEL CASING IS NOT REQUIRED FOR DRILLED PIERS AT BENT NO. 1, BENT NO. 2, AND BENT NO. 3.

FOR DRILLED PIERS, SEE SPECIAL PROVISIONS.

SPT TESTING IS NOT REQUIRED TO DETERMINE THE TIP BEARING CAPACITY OF THE DRILLED PIERS AT BENT NO. 1, BENT NO. 2, AND BENT NO. 3.

SLURRY CONSTRUCTION SHALL NOT BE USED FOR THIS PROJECT.

SID INSPECTIONS MAY BE REQUIRED TO DETERMINE THE BOTTOM CLEANLINESS OF THE DRILLED PIERS AT BENT NO. 1, BENT NO. 2, AND BENT NO. 3.

CSL TUBES ARE REQUIRED AND CSL TESTING MAY BE REQUIRED FOR DRILLED PIERS AT BENT NO. 1, BENT NO. 2, AND BENT NO. 3. SEE SPECIAL PROVISION FOR CROSSHOLE SONIC LOGGING.

THE REQUIRED TIP BEARING CAPACITY AT BENT NO. 1, BENT NO. 2, AND BENT NO. 3 SHALL BE VERIFIED.

NORTH CAROLINA PROFESSIONAL SEAL 23926 ENGINEER BRIAN C. HANNS
5/22/06

PROJECT NO. R-0609IA
GUILFORD COUNTY
STATION: 19+26.763 -FLY-

SHEET 2 OF 4

STATE OF NORTH CAROLINA
DEPARTMENT OF TRANSPORTATION
RALEIGH

GENERAL DRAWING FOR FLYOVER BRIDGE OVER I-85 BETWEEN SR 1154 AND I-85

REVISIONS						SHEET NO.
NO.	BY:	DATE:	NO.	BY:	DATE:	S-267
1			3			TOTAL SHEETS
2			4			321

DRAWN BY : D. G. ELY DATE : 7/15/05
CHECKED BY : K. W. ALFORD DATE : 7/22/05

15-MAY-2006 11:54
J:\STRUCT~1\frye\FINAL_~1\Str9\R0609IA_sd_GD_STR.9.dgn
rwwright

STR. #9

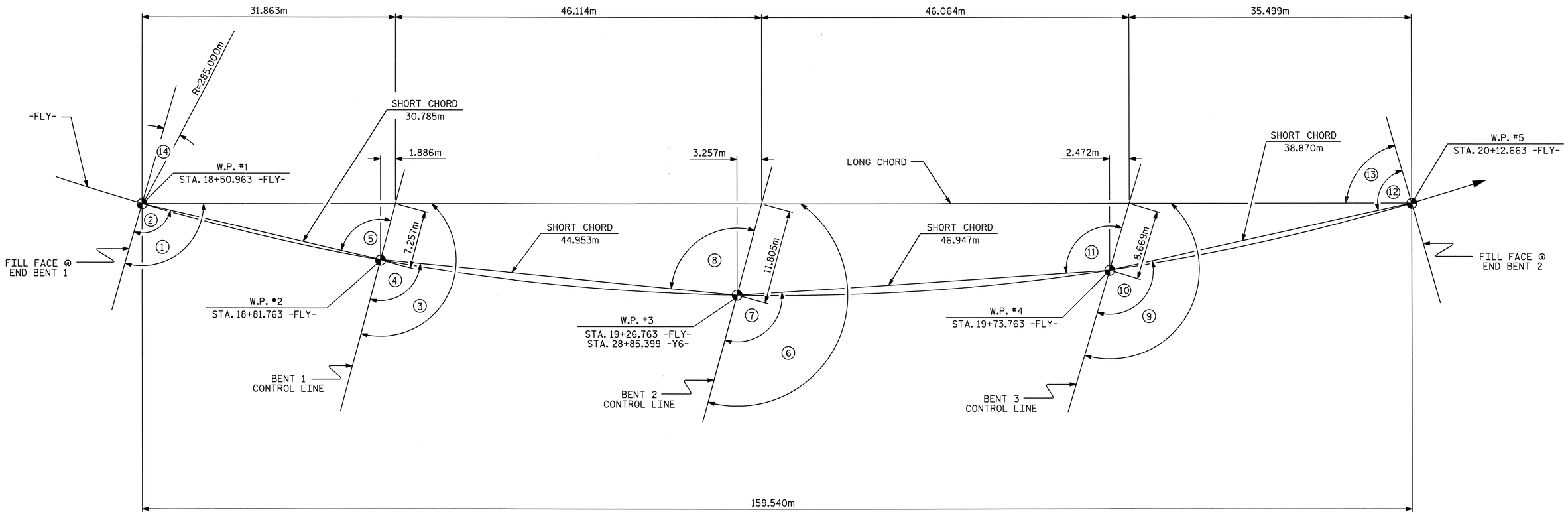

LONG CHORD LAYOUT

ANGLES

	DEG MIN SEC
1	106°-06′-35″
2	92°-57′-07″
3	105°-03′-43″
4	99°-31′-24″
5	91°-54′-15″
6	106°-00′-55″
7	109°-43′-28″
8	100°-28′-36″
9	106°-33′-59″
10	118°-54′-37″
11	110°-16′-32″
12	86°-14′-07″
13	73°-53′-29″
14	00°-08′-39″

HORIZONTAL CURVE DATA -FLY-

PIs STA. 18+01.843	PI = STA. 23+23.787	PIs STA. 24+49.516
Ø = 10°-03′-06.8″	Δ = 119°-30′-07.6″(LT)	Ø = 6°-01′-52.1″
Ls = 100.000m	L = 594.426	Ls = 60.000m
LT = 66.774m	T = 488.718	LT = 40.023m
ST = 33.431m	R = 285.000	ST = 20.021m

PROJECT NO. R-0609IA
GUILFORD COUNTY
STATION: 19+26.763 -FLY-

SHEET 3 OF 4

STATE OF NORTH CAROLINA
DEPARTMENT OF TRANSPORTATION
RALEIGH

GENERAL DRAWING FOR FLYOVER BRIDGE OVER I-85 BETWEEN SR 1154 AND I-85

NORTH CAROLINA PROFESSIONAL SEAL 23926 ENGINEER BRIAN C. HANKS
5/22/06

REVISIONS							SHEET NO.
NO.	BY:	DATE:	NO.	BY:	DATE:		S-268
1			3				TOTAL SHEETS
2			4				321

DRAWN BY : D. G. ELY DATE : 7/12/05
CHECKED BY : K. W. ALFORD DATE : 7/25/05

15-MAY-2006 11:54
J:\STRUCT~1\frye\FINAL_~1\Str9\R0609IA_sd_GD_STR.9.dgn
rwwright

STR. #9

BENCH MARK #5: RAILROAD SPIKE IN 600mm RED OAK 74m RIGHT -BL- STA. 42+82.000, ELEV. 239.694

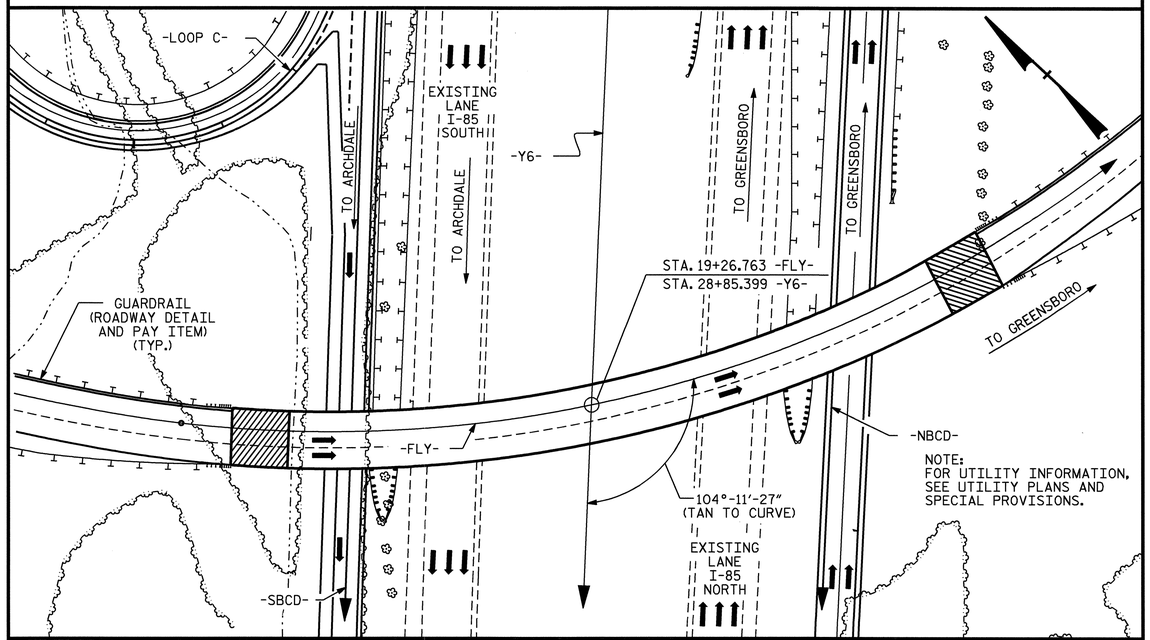

LOCATION SKETCH

NOTES

ALL DIMENSIONS ARE IN MILLIMETERS UNLESS OTHERWISE NOTED.

ALL ELEVATIONS ARE IN METERS.

ASSUMED LIVE LOAD = MS 18 OR ALTERNATE LOADING.

THIS BRIDGE HAS BEEN DESIGNED IN ACCORDANCE WITH THE REQUIREMENTS OF THE AASHTO STANDARD SPECIFICATIONS FOR SEISMIC DESIGN OF HIGHWAY BRIDGES FOR SEISMIC PERFORMANCE CATEGORY A.

THIS BRIDGE HAS BEEN DESIGNED BY THE STRENGTH DESIGN METHOD AS SPECIFIED IN AASHTO STANDARD SPECIFICATIONS.

FOR OTHER DESIGN DATA AND GENERAL NOTES, SEE SHEET SNSM.

FOR EROSION CONTROL MEASURES SEE EROSION CONTROL PLANS.

THE CONTRACTOR SHALL PROVIDE INDEPENDENT ASSURANCE SAMPLES OF REINFORCING STEEL AS FOLLOWS: FOR PROJECTS REQUIRING UP TO 360,000 kg OF REINFORCING STEEL, ONE 760mm SAMPLE OF EACH SIZE BAR USED, AND FOR PROJECTS REQUIRING OVER 360,000 kg OF REINFORCING STEEL, TWO 760mm SAMPLES OF EACH SIZE BAR USED. THE BARS FROM WHICH THE SAMPLES ARE TAKEN MUST THEN BE SPLICED WITH REPLACEMENT BARS OF THE SIZE AND LENGTH OF THE SAMPLE PLUS A MINIMUM LAP SPLICE OF THIRTY BAR DIAMETERS.

REMOVABLE FORMS MAY BE USED IN LIEU OF METAL STAY-IN-PLACE FORMS IN ACCORDANCE WITH ARTICLE 420-3 OF THE STANDARD SPECIFICATIONS.

ALL STRUCTURAL STEEL SHALL BE AASHTO M270 GRADE 345W AND PAINTED IN ACCORDANCE WITH SYSTEM 4 OF ARTICLE 442-7 OF THE STANDARD SPECIFICATIONS UNLESS OTHERWISE NOTED ON THE PLANS.

THE CLASS AA CONCRETE IN THE BRIDGE DECK SHALL CONTAIN FLY ASH OR GROUND GRANULATED BLAST FURNACE SLAG AT THE SUBSTITUTION RATE SPECIFIED IN ARTICLE 1024-1 AND IN ACCORDANCE WITH ARTICLES 1024-5 AND 1024-6 OF THE STANDARD SPECIFICATIONS. NO PAYMENT WILL BE MADE FOR THIS SUBSTITUTION AS IT IS CONSIDERED INCIDENTAL TO THE COST OF THE REINFORCED CONCRETE DECK SLAB.

NEEDLE BEAMS WILL NOT BE ALLOWED UNLESS OTHERWISE CALLED FOR ON THE PLANS OR APPROVED BY THE ENGINEER.

FOR SUBMITTAL OF WORKING DRAWINGS, SEE SPECIAL PROVISIONS.

FOR METRIC STRUCTURAL STEEL, SEE SPECIAL PROVISIONS.

FOR CRANE SAFETY, SEE SPECIAL PROVISIONS.

FOR MAINTENANCE AND PROTECTION OF TRAFFIC BENEATH PROPOSED STRUCTURE, SEE SPECIAL PROVISIONS.

FOR FALSEWORK AND FORMS OVER OR ADJACENT TO TRAFFIC, SEE SPECIAL PROVISIONS.

FOR FALSEWORK AND FORMWORK, SEE SPECIAL PROVISIONS.

FOR STEEL H-PILES, SEE SPECIAL PROVISIONS.

TOTAL BILL OF MATERIAL

	FOUNDATION EXCAVATION	1066mm Ø DRILLED PIERS IN SOIL	1066mm Ø DRILLED PIERS NOT IN SOIL	SID INSPECTIONS	CROSSHOLE SONIC LOGGING	REINFORCED CONCRETE DECK SLAB	GROOVING BRIDGE FLOORS	CLASS A CONCRETE	BRIDGE APPROACH SLABS	SPIRAL COLUMN REINFORCING STEEL	REINFORCING STEEL	STRUCTURAL STEEL	HP 310 X 79 STEEL PILES		CONCRETE BARRIER RAIL	100mm SLOPE PROTECTION	POT BEARINGS	EXPANSION JOINT SEALS
	LUMP SUM	METERS	METERS	EA	EA	SQ. METERS	SQ. METERS	CU. METERS	LUMP SUM	kg	kg	APPROX. kg	NO.	METERS	METERS	SQ. METERS	LUMP SUM	LUMP SUM
SUPERSTRUCTURE						2108.6	1965.7		LUMP SUM			442,000			324.2		LUMP SUM	LUMP SUM
END BENT 1								41.5			3988		11	187		230		
BENT 1	LUMP SUM		18.0					99.2		622	13210							
BENT 2	LUMP SUM	13.4	23.0	1	1			99.8		1245	14704							
BENT 3	LUMP SUM	6.4	20.0					95.3		913	13477							
END BENT 2								39.1			3674		11	66		270		
TOTAL	LUMP SUM	19.8	61.0	1	1	2108.6	1965.7	374.9	LUMP SUM	2780	49,053	442,000	22	253	324.2	500	LUMP SUM	LUMP SUM

PROJECT NO. R-0609IA

GUILFORD COUNTY

STATION: 19+26.763 -FLY-

SHEET 4 OF 4

STATE OF NORTH CAROLINA
DEPARTMENT OF TRANSPORTATION
RALEIGH

GENERAL DRAWING FOR FLYOVER BRIDGE OVER I-85 BETWEEN SR 1154 AND I-85

NORTH CAROLINA PROFESSIONAL SEAL 23926 ENGINEER BRIAN C. HANKS
5/22/06

REVISIONS						SHEET NO.
NO.	BY:	DATE:	NO.	BY:	DATE:	S-269
1			3			TOTAL SHEETS
2			4			321

DRAWN BY : D. G. ELY DATE : 7/11/05
CHECKED BY : K. W. ALFORD DATE : 8/05

15-MAY-2006 11:53
J:\STRUCT~1\frye\FINAL_~1\Str9\R0609IA_sd_GD_STR.9.dgn
rwwright

STR. #9

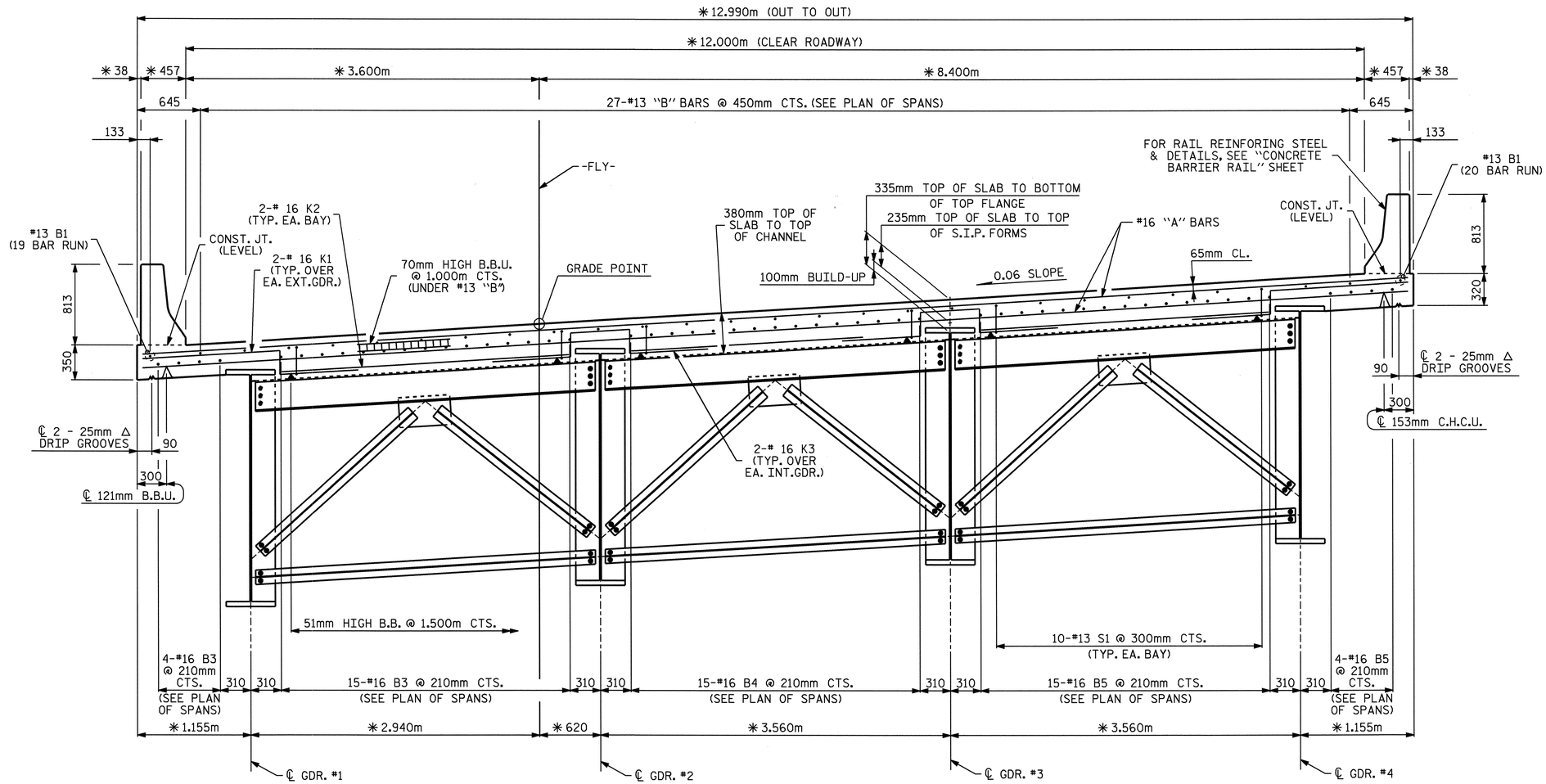

TYPICAL SECTION

SHOWING END BENT DIAPHRAGMS
(✱ INDICATES RADIAL DIMENSION)

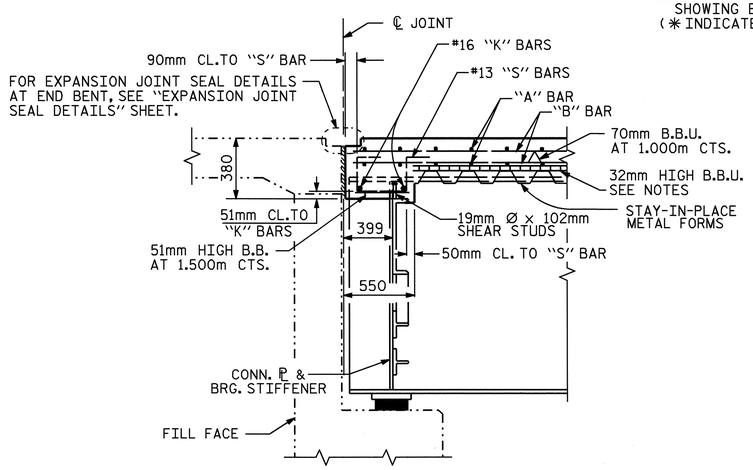

SECTION @ END BENT

FOR "J" BAR PLACEMENT IN SLAB, SEE "EXPANSION JOINT SEAL DETAILS" SHEET.

NOTES

PROVIDE 32mm HIGH BEAM BOLSTERS UPPER AT 1.2m CTS. ATOP THE METAL STAY-IN-PLACE FORMS TO SUPPORT THE BOTTOM MAT OF 'A' BARS. WHEN USING REMOVABLE FORMS, PROVIDE CONTINUOUS HIGH CHAIRS FOR METAL DECK (C.H.C.M.) @ 1.2m CTS. WITH A HEIGHT TO SUPPORT THE BOTTOM MAT OF 'A' BARS A CLEAR DISTANCE OF 65mm ABOVE THE TOP OF THE REMOVABLE FORM.

METAL STAY-IN-PLACE FORMS SHALL NOT BE WELDED TO BEAM OR GIRDER FLANGES IN THE ZONES REQUIRING CHARPY V-NOTCH TEST. SEE STRUCTURAL STEEL DETAIL SHEETS.

PREVIOUSLY CAST CONCRETE IN A CONTINUOUS UNIT SHALL HAVE ATTAINED A MINIMUM COMPRESSIVE STRENGTH OF 20.7 MPa BEFORE ADDITIONAL CONCRETE IS CAST IN THE UNIT.

BARRIER RAIL IN A CONTINUOUS UNIT SHALL NOT BE CAST UNTIL ALL SLAB CONCRETE IN THE UNIT HAS BEEN CAST AND HAS REACHED A MINIMUM COMPRESSIVE STRENGTH OF 20.7 MPa.

STRUCTURAL STEEL ERECTION IN A CONTINUOUS UNIT SHALL BE COMPLETE BEFORE FALSEWORK OR FORMS ARE PLACED ON THE UNIT.

THE CONTRACTOR MAY, WHEN NECESSARY, PROPOSE A SCHEME FOR AVOIDING INTERFERENCE BETWEEN METAL STAY-IN-PLACE FORM SUPPORTS OR FORMS AND BEAM/GIRDER STIFFENERS OR CONNECTOR PLATES. THE PROPOSAL SHALL BE INDICATED, AS APPROPRIATE, ON EITHER THE STEEL WORKING DRAWINGS OR THE METAL STAY-IN-PLACE FORM WORKING DRAWINGS.

THE CONTRACTOR SHALL ADJUST THE GIRDER BUILDUPS AS NECESSARY TO INCORPORATE A MAXIMUM PERMISSIBLE VARIATION IN POT BEARING DEPTH OF 13mm, SEE SPECIAL PROVISION FOR POT BEARINGS.

REMOVABLE FORMS MAY BE USED IN LIEU OF METAL STAY-IN-PLACE FORMS IN ACCORDANCE WITH ARTICLE 420-3 OF THE STANDARD SPECIFICATIONS.

PROJECT NO. R-0609IA
GUILFORD COUNTY
STATION: 19+26.763 -FLY-

SHEET 1 OF 2

STATE OF NORTH CAROLINA
DEPARTMENT OF TRANSPORTATION
RALEIGH

SUPERSTRUCTURE
TYPICAL SECTION & DETAILS

NORTH CAROLINA PROFESSIONAL SEAL 23926 ENGINEER BRIAN C. HAWKINS
5/22/06

REVISIONS						SHEET NO.
NO.	BY:	DATE:	NO.	BY:	DATE:	S-270
1			3			TOTAL SHEETS
2			4			321

DRAWN BY : William T. Parker DATE : 06/01/05
CHECKED BY : K.W.ALFORD DATE : 6/10/05

15-MAY-2006 11:51
J:\STRUCT~1\frye\FINAL_~1\Str9\r0609a_sd_09_ts.dgn
rwwright

STR. #9

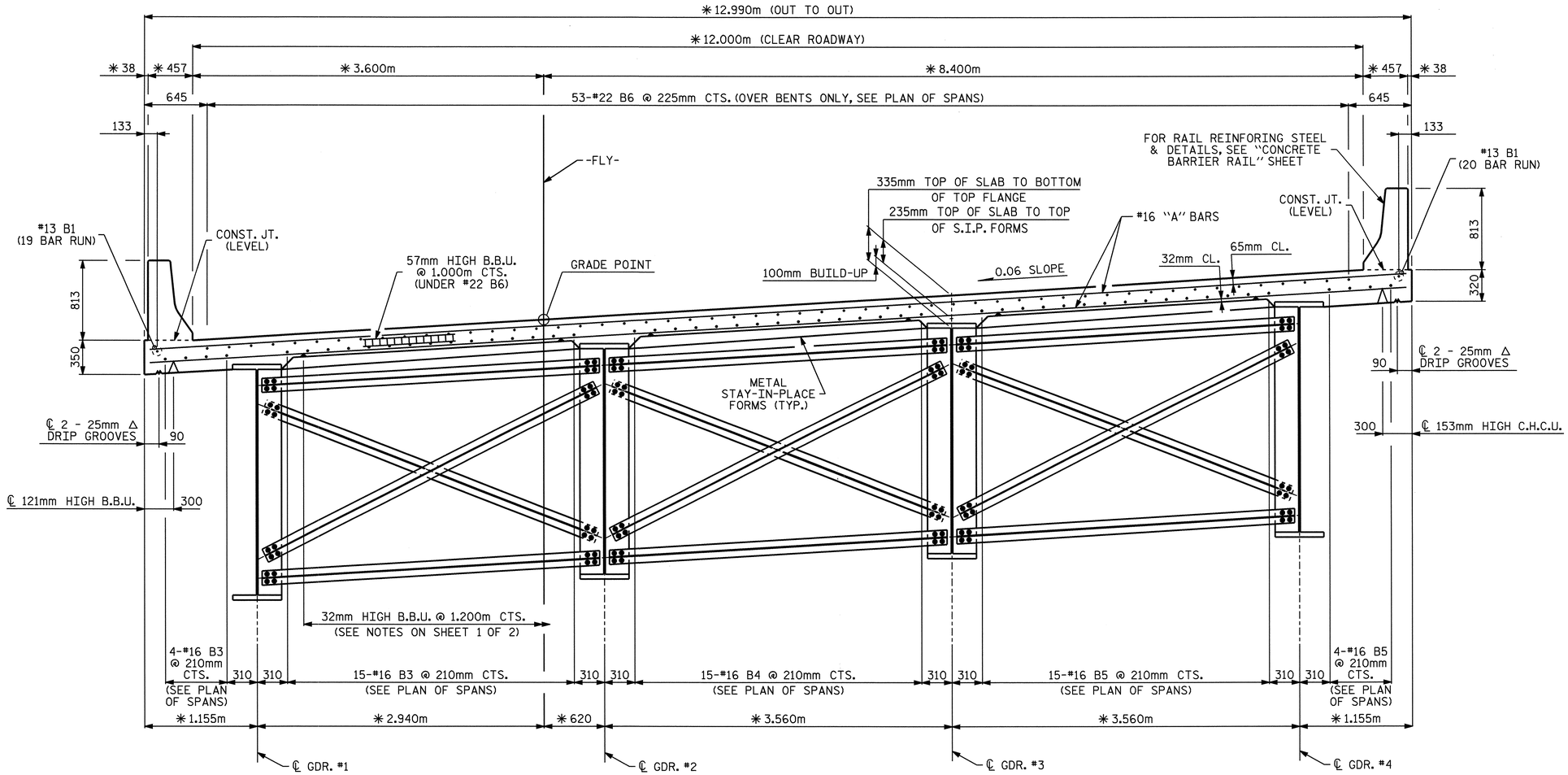

TYPICAL SECTION

SHOWING INTERMEDIATE & BENT DIAPHRAGMS
(✳ INDICATES RADIAL DIMENSION)

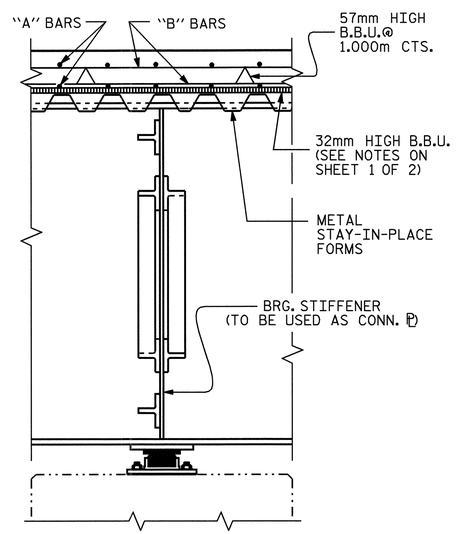

SECTION @ BENT

(EXTERIOR GIRDER SHOWN)

PROJECT NO. R-0609IA
GUILFORD COUNTY
STATION: 19+26.763 -FLY-

SHEET 2 OF 2

STATE OF NORTH CAROLINA
DEPARTMENT OF TRANSPORTATION
RALEIGH

SUPERSTRUCTURE
TYPICAL SECTION & DETAILS

NORTH CAROLINA PROFESSIONAL SEAL 23926 ENGINEER BRIAN C. HAWKS
5/22/06

REVISIONS						SHEET NO.
NO.	BY:	DATE:	NO.	BY:	DATE:	S-271
1			3			TOTAL SHEETS
2			4			321

DRAWN BY : William T. Parker DATE : 06/01/05
CHECKED BY : K.W.ALFORD DATE : 6/10/05

15-MAY-2006 11:51
J:\STRUCT~1\frye\FINAL_~1\Str9\r0609a_sd_09_ts.dgn
rwwright

STR. #9

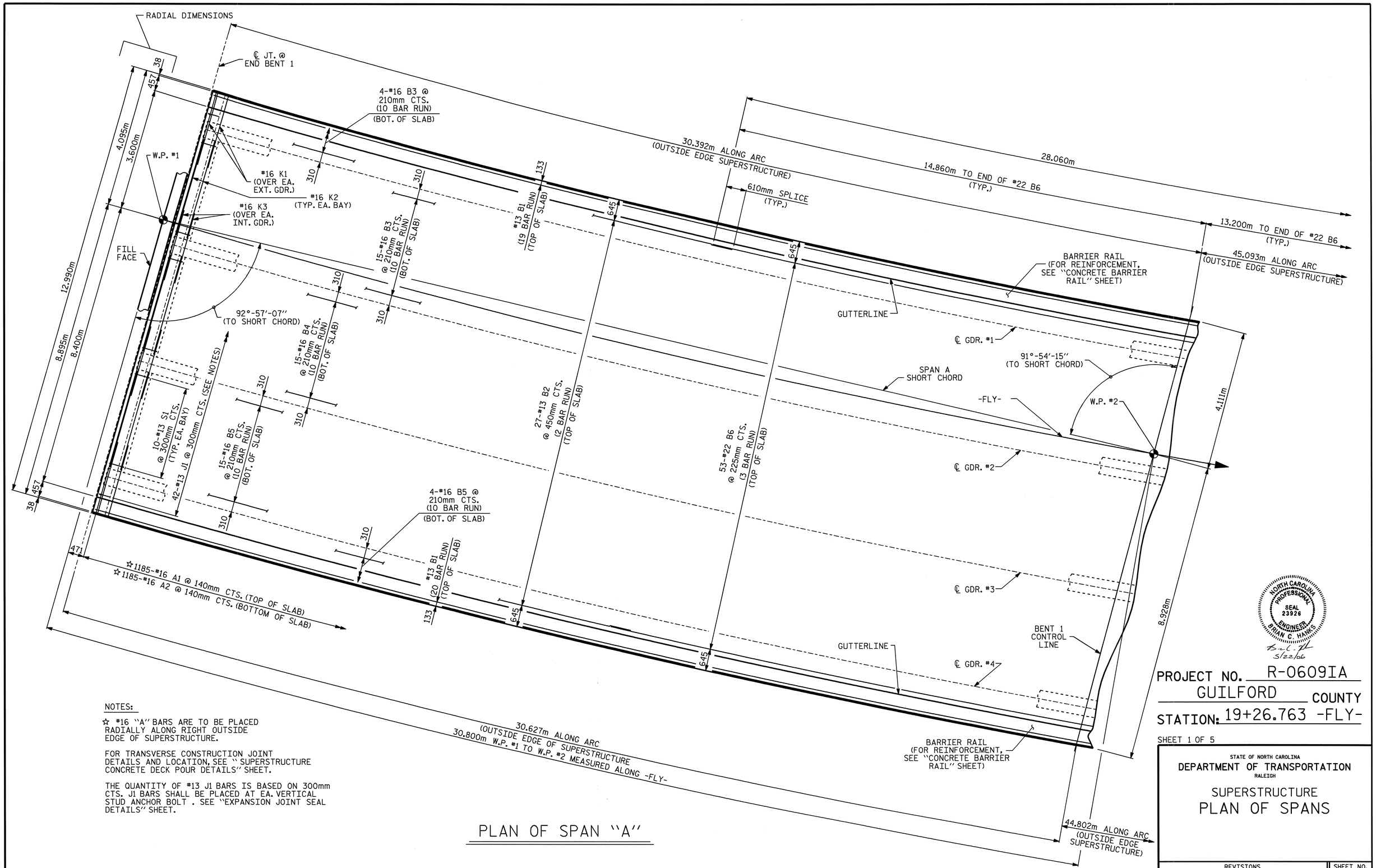

NOTES:

☆ #16 "A" BARS ARE TO BE PLACED RADIALLY ALONG RIGHT OUTSIDE EDGE OF SUPERSTRUCTURE.

FOR TRANSVERSE CONSTRUCTION JOINT DETAILS AND LOCATION, SEE "SUPERSTRUCTURE CONCRETE DECK POUR DETAILS" SHEET.

THE QUANTITY OF #13 J1 BARS IS BASED ON 300mm CTS. J1 BARS SHALL BE PLACED AT EA. VERTICAL STUD ANCHOR BOLT . SEE "EXPANSION JOINT SEAL DETAILS" SHEET.

PLAN OF SPAN "A"

NORTH CAROLINA PROFESSIONAL SEAL 23926 ENGINEER BRIAN C. HAWKS
5/22/06

PROJECT NO. R-0609IA
GUILFORD COUNTY
STATION: 19+26.763 -FLY-

SHEET 1 OF 5

STATE OF NORTH CAROLINA
DEPARTMENT OF TRANSPORTATION
RALEIGH

SUPERSTRUCTURE
PLAN OF SPANS

REVISIONS						SHEET NO.
NO.	BY:	DATE:	NO.	BY:	DATE:	S-272
1			3			TOTAL SHEETS
2			4			321

DRAWN BY : William T. Parker DATE : 06/01/05
CHECKED BY : K.W.ALFORD DATE : 6/15/05

15-MAY-2006 11:50
J:\STRUCT~1\frye\FINAL_~1\Str9\r0609a_sd_09_ps.dgn
rwwright

STR. #9

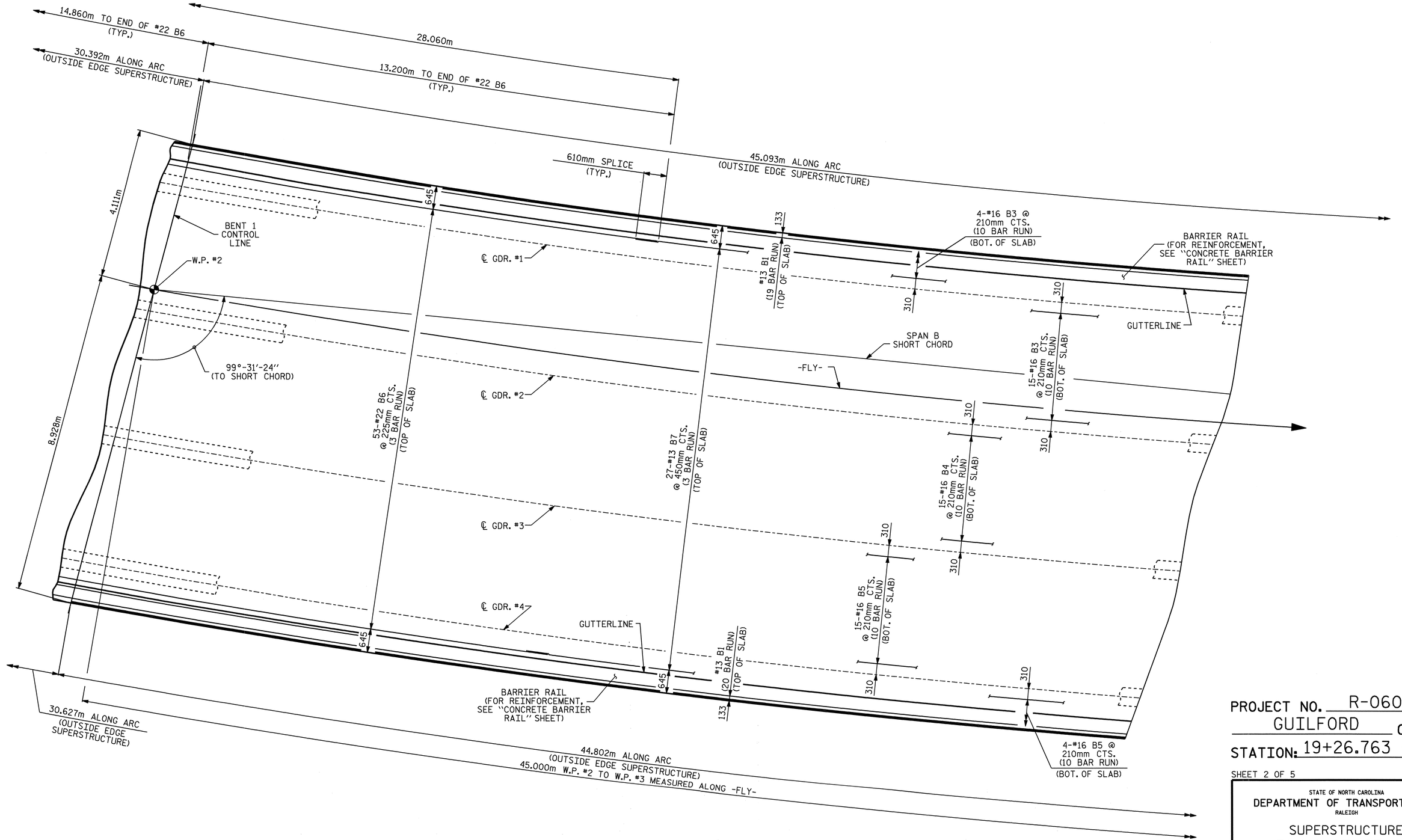

PLAN OF SPAN "B"

PROJECT NO. R-0609IA
GUILFORD COUNTY
STATION: 19+26.763 -FLY-

SHEET 2 OF 5

STATE OF NORTH CAROLINA
DEPARTMENT OF TRANSPORTATION
RALEIGH

SUPERSTRUCTURE
PLAN OF SPANS

NORTH CAROLINA PROFESSIONAL SEAL 23926 ENGINEER BRIAN C. HAWKS
5/22/06

REVISIONS							SHEET NO.
NO.	BY:	DATE:	NO.	BY:	DATE:		S-273
1			3				TOTAL SHEETS
2			4				321

DRAWN BY : William T. Parker DATE : 06/01/05
CHECKED BY : K.W.ALFORD DATE : 6/15/05

15-MAY-2006 11:50
J:\STRUCT~1\frye\FINAL_~1\Str9\r0609a_sd_09_ps.dgn
rwwright

STR. #9

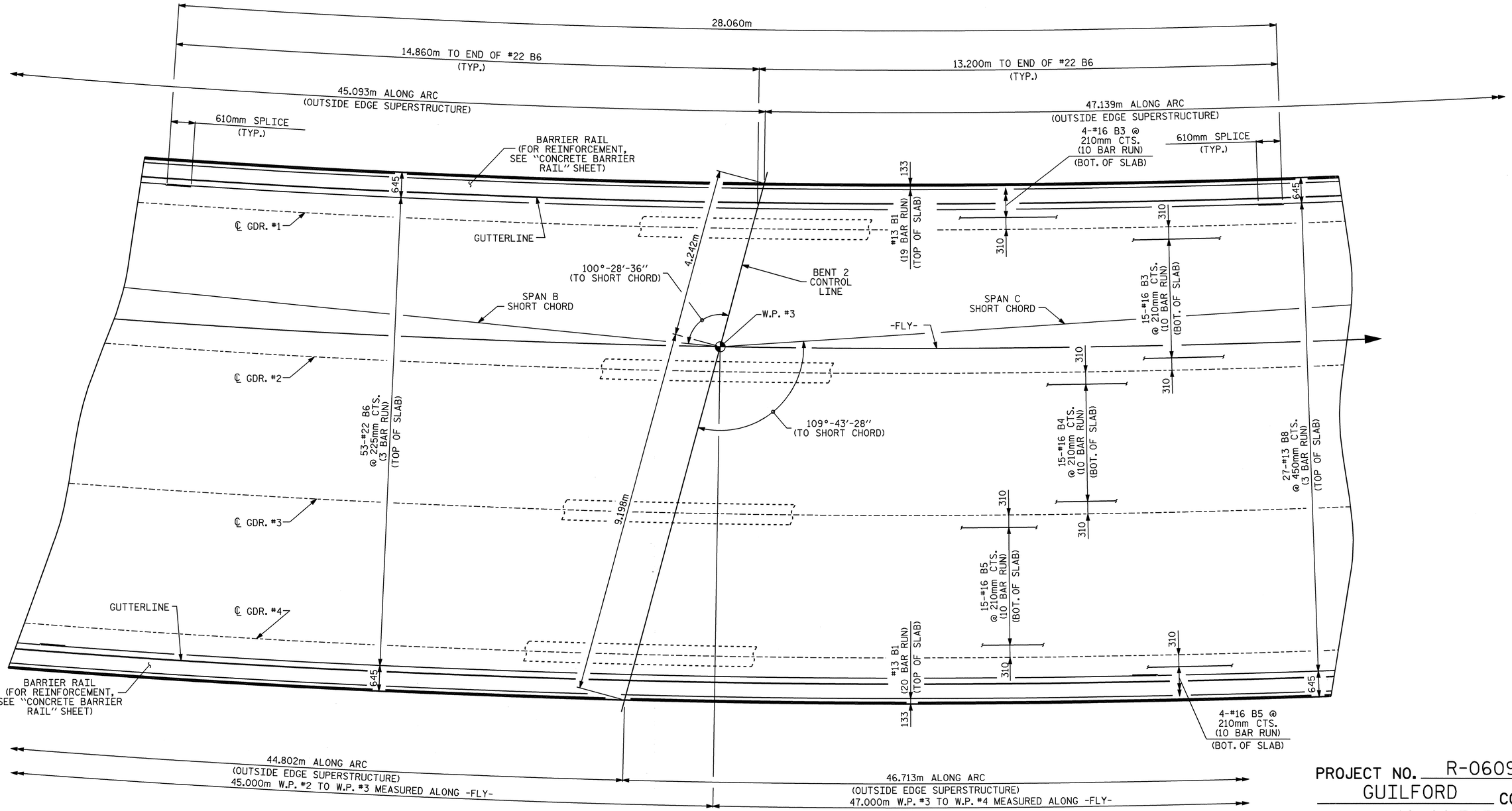

PLAN OF SPAN "B"

PLAN OF SPAN "C"

PROJECT NO. R-0609IA

GUILFORD COUNTY

STATION: 19+26.763 -FLY-

SHEET 3 OF 5

STATE OF NORTH CAROLINA
DEPARTMENT OF TRANSPORTATION
RALEIGH

SUPERSTRUCTURE
PLAN OF SPANS

NORTH CAROLINA PROFESSIONAL SEAL 23926 ENGINEER BRIAN C. HANKINS
5/22/06

REVISIONS							SHEET NO.
NO.	BY:	DATE:	NO.	BY:	DATE:		S-274
1			3				TOTAL SHEETS
2			4				321

DRAWN BY : William T. Parker DATE : 06/01/05
CHECKED BY : K.W.ALFORD DATE : 6/15/05

15-MAY-2006 11:50
J:\STRUCT~1\frye\FINAL_~1\Str9\r0609a_sd_09_ps.dgn
rwwright

STR. #9

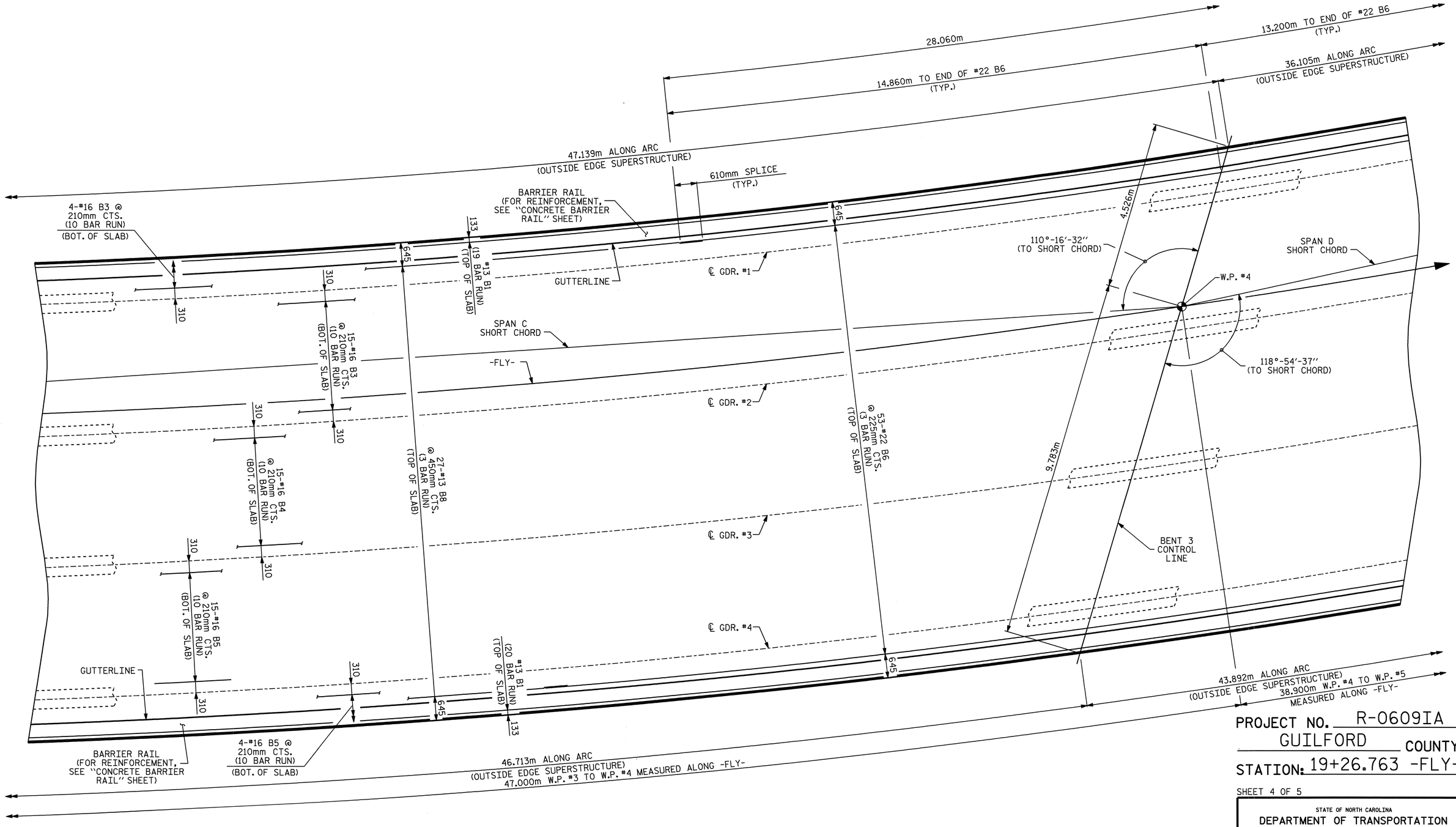

PROJECT NO. R-0609IA
GUILFORD COUNTY
STATION: 19+26.763 -FLY-

SHEET 4 OF 5

STATE OF NORTH CAROLINA
DEPARTMENT OF TRANSPORTATION
RALEIGH

SUPERSTRUCTURE
PLAN OF SPANS

PLAN OF SPAN "C"

NORTH CAROLINA PROFESSIONAL SEAL 23926 ENGINEER BRIAN C. HANKS
5/22/06

REVISIONS						SHEET NO.
NO.	BY:	DATE:	NO.	BY:	DATE:	S-275
1			3			TOTAL SHEETS
2			4			321

DRAWN BY : William T. Parker DATE : 06/01/05
CHECKED BY : K.W.ALFORD DATE : 6/15/05

15-MAY-2006 11:50
J:\STRUCT~1\frye\FINAL_~1\Str9\r0609ia_sd_09_ps.dgn
rwwright

STR. #9

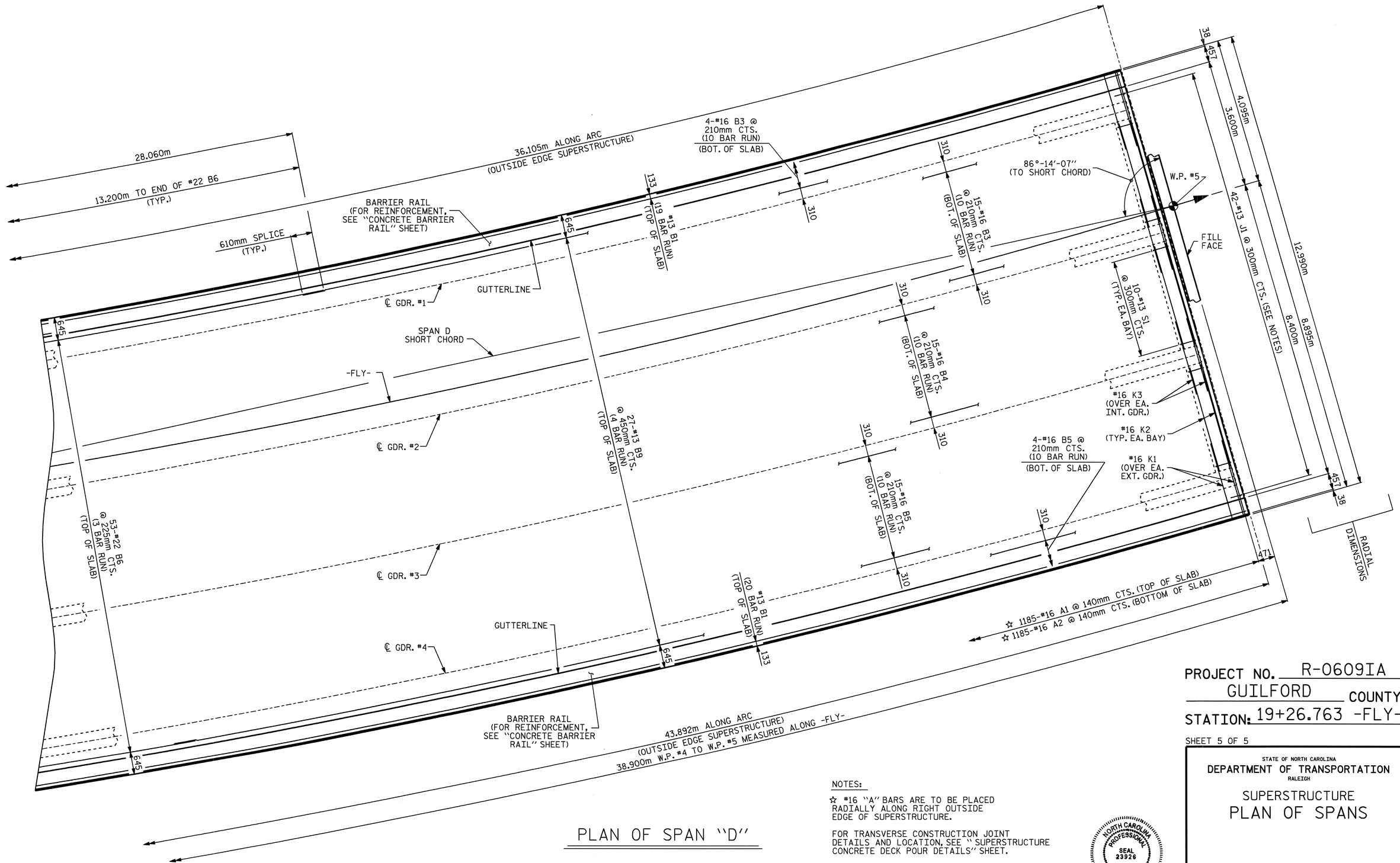

PLAN OF SPAN "D"

NOTES:

☆ #16 "A" BARS ARE TO BE PLACED RADIALLY ALONG RIGHT OUTSIDE EDGE OF SUPERSTRUCTURE.

FOR TRANSVERSE CONSTRUCTION JOINT DETAILS AND LOCATION, SEE "SUPERSTRUCTURE CONCRETE DECK POUR DETAILS" SHEET.

THE QUANTITY OF #13 J1 BARS IS BASED ON 300mm CTS. J1 BARS SHALL BE PLACED AT EA. VERTICAL STUD ANCHOR BOLT . SEE "EXPANSION JOINT SEAL DETAILS" SHEET.

NORTH CAROLINA PROFESSIONAL SEAL 23926 ENGINEER BRIAN C. HANKS
5/22/06

PROJECT NO. R-0609IA
GUILFORD COUNTY
STATION: 19+26.763 -FLY-

SHEET 5 OF 5

STATE OF NORTH CAROLINA
DEPARTMENT OF TRANSPORTATION
RALEIGH

SUPERSTRUCTURE
PLAN OF SPANS

REVISIONS							SHEET NO.
NO.	BY:	DATE:	NO.	BY:	DATE:		S-276
1			3				TOTAL SHEETS
2			4				321

DRAWN BY : William T. Parker DATE : 06/01/05
CHECKED BY : K.W.ALFORD DATE : 6/15/05

15-MAY-2006 11:50
J:\STRUCT~1\frye\FINAL_~1\Str9\r0609ia_sd_09_ps.dgn
rwwright

STR. #9

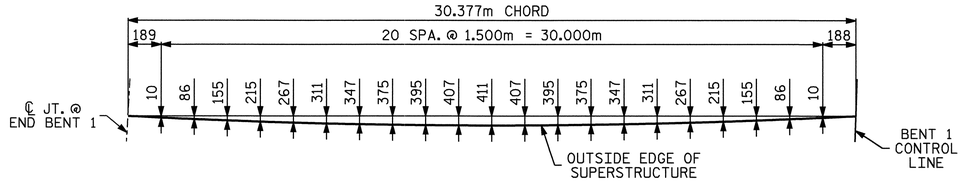

SPAN A - LEFT SIDE

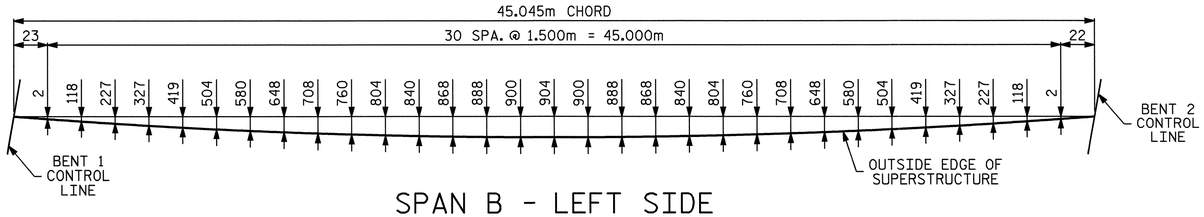

SPAN B - LEFT SIDE

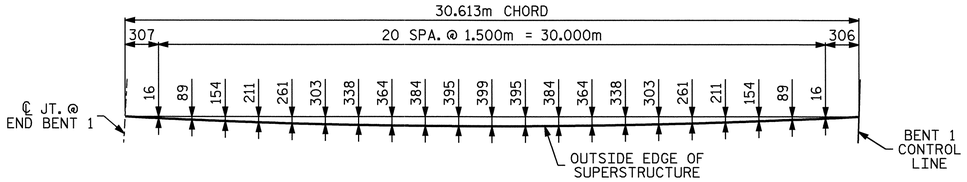

SPAN A - RIGHT SIDE

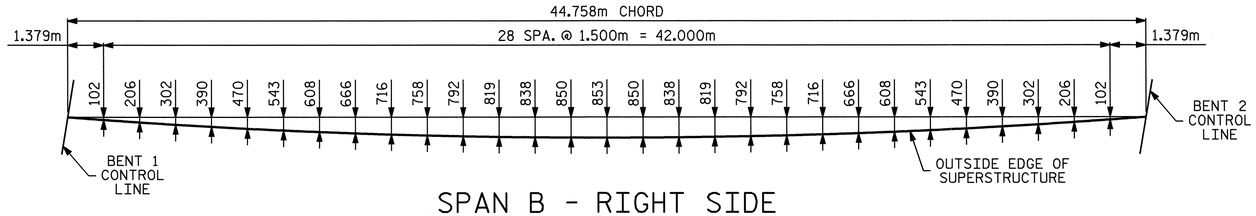

SPAN B - RIGHT SIDE

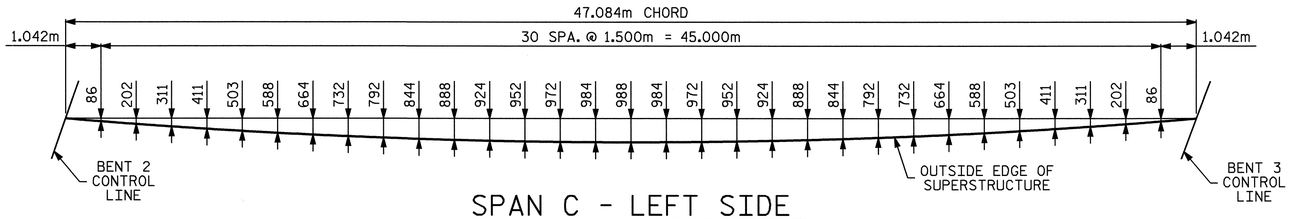

SPAN C - LEFT SIDE

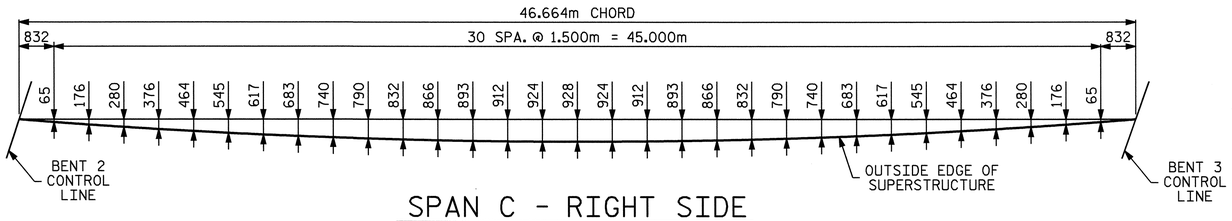

SPAN C - RIGHT SIDE

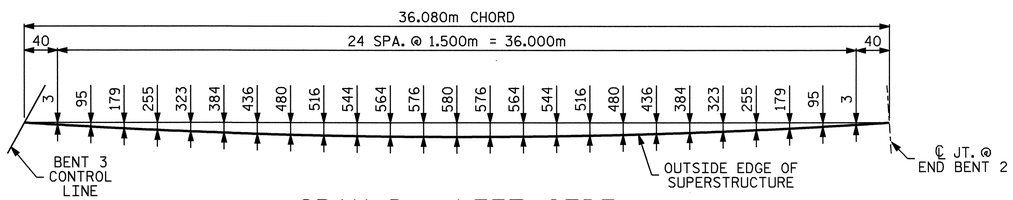

SPAN D - LEFT SIDE

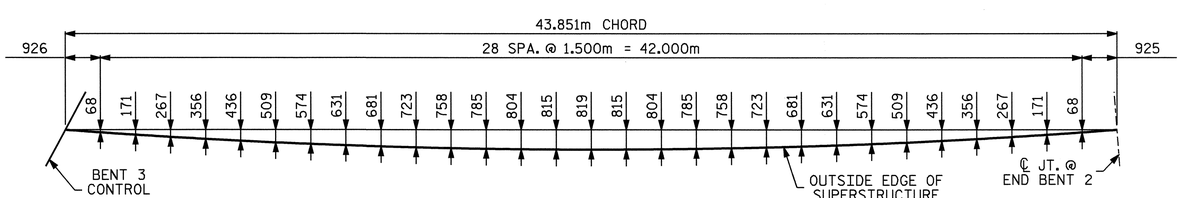

SPAN D - RIGHT SIDE

PROJECT NO. R-0609IA
GUILFORD COUNTY
STATION: 19+26.763 -FLY-

STATE OF NORTH CAROLINA
DEPARTMENT OF TRANSPORTATION
RALEIGH

SUPERSTRUCTURE
ARC OFFSETS

NORTH CAROLINA PROFESSIONAL SEAL 23926 ENGINEER BRIAN C. HANKS
5/22/06

REVISIONS							SHEET NO.
NO.	BY:	DATE:	NO.	BY:	DATE:		S-277
1			3				TOTAL SHEETS
2			4				321

DRAWN BY : William T. Parker DATE : 06/01/05
CHECKED BY : K.W.ALFORD DATE : 6/16/05

15-MAY-2006 11:49
J:\STRUCT~1\frye\FINAL_~1\Str9\r0609a_sd_09_ps.dgn
rwwright

STR. #9

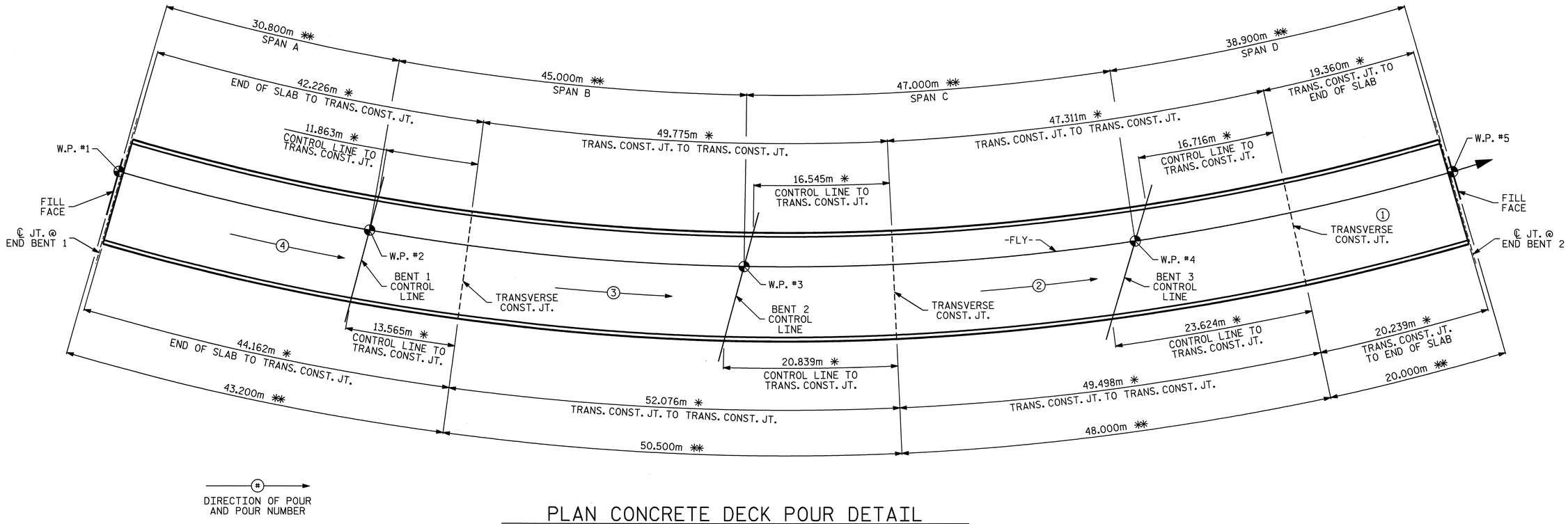

DIRECTION OF POUR AND POUR NUMBER

PLAN CONCRETE DECK POUR DETAIL

✱ DIMENSIONS MEASURED ALONG ARC OUTSIDE EDGE OF SUPERSTRUCTURE
✱✱ DIMENSIONS MEASURED ALONG ARC -FLY- LINE

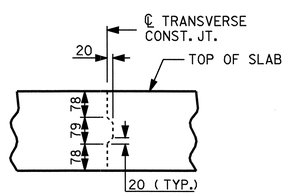

TRANSVERSE CONSTRUCTION JOINT DETAIL

NOTE: REINFORCING STEEL IN SLAB NOT SHOWN. LONGITUDINAL REINFORCING STEEL SHALL BE CONTINUOUS THRU JOINT.

PROJECT NO. R-0609IA
GUILFORD COUNTY
STATION: 19+26.763 -FLY-

STATE OF NORTH CAROLINA
DEPARTMENT OF TRANSPORTATION
RALEIGH

SUPERSTRUCTURE
CONCRETE DECK
POUR DETAILS

NORTH CAROLINA PROFESSIONAL SEAL 23926 ENGINEER BRIAN C. HANKS
5/22/06

REVISIONS						SHEET NO.
NO.	BY:	DATE:	NO.	BY:	DATE:	S-278
1			3			TOTAL SHEETS
2			4			321

DRAWN BY : William T. Parker DATE : 06/01/05
CHECKED BY : K.W.ALFORD DATE : 6/17/05

15-MAY-2006 11:49
J:\STRUCT~1\frye\FINAL_~1\Str9\r0609a_sd_09_ps.dgn
rwwright

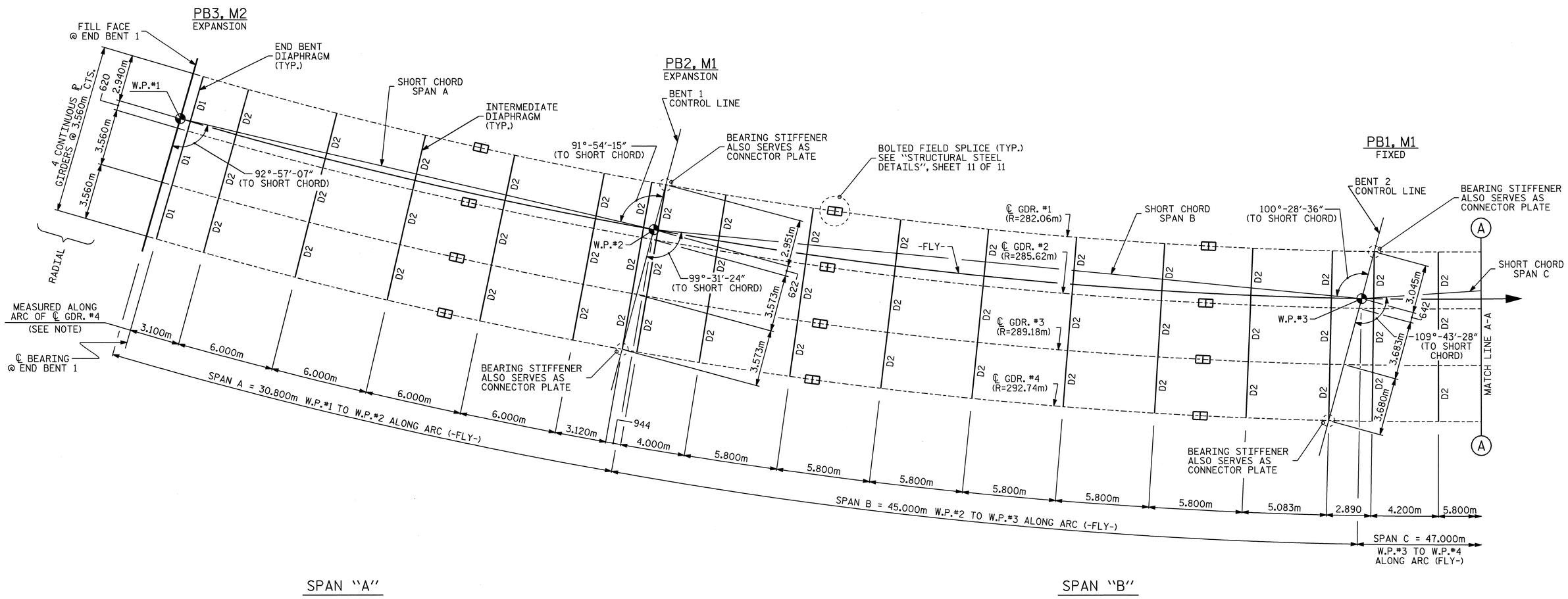

FRAMING PLAN

NOTE: ALL DIAPHRAGMS ARE TO BE PLACED RADIALLY TO ℄ GDR.#4.

PROJECT NO. R-0609IA
GUILFORD COUNTY
STATION: 19+26.763 -FLY-

SHEET 1 OF 2

STATE OF NORTH CAROLINA
DEPARTMENT OF TRANSPORTATION
RALEIGH

SUPERSTRUCTURE
FRAMING PLAN

NORTH CAROLINA PROFESSIONAL SEAL 23926 ENGINEER BRIAN C. HAWKS
3/22/06

REVISIONS						SHEET NO.
NO.	BY:	DATE:	NO.	BY:	DATE:	S-279
1			3			TOTAL SHEETS
2			4			321

DRAWN BY : William T. Parker DATE : 06/01/05
CHECKED BY : K.W.ALFORD DATE : 6/17/05

15-MAY-2006 11:48
J:\STRUCT~1\frye\FINAL_~1\Str9\r0609ia_sd_09_fp.dgn
rwwright

STR. #9

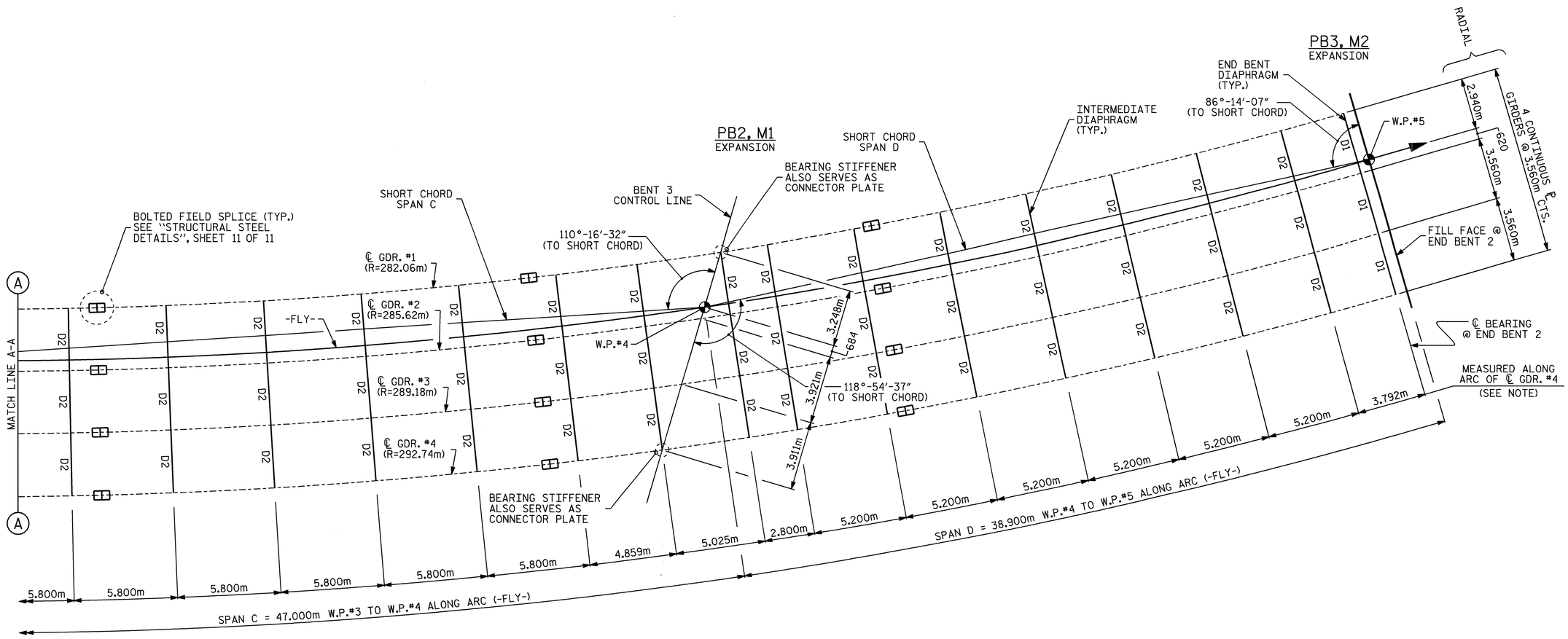

FRAMING PLAN

NOTE: ALL DIAPHRAGMS ARE TO BE PLACED RADIALLY TO ℄ GDR.#4.

PROJECT NO. R-0609IA
GUILFORD COUNTY
STATION: 19+26.763 -FLY-

SHEET 2 OF 2

STATE OF NORTH CAROLINA
DEPARTMENT OF TRANSPORTATION
RALEIGH

SUPERSTRUCTURE
FRAMING PLAN

NORTH CAROLINA PROFESSIONAL SEAL 23926 ENGINEER BRIAN C. HAWKS
5/22/06

REVISIONS						SHEET NO.
NO.	BY:	DATE:	NO.	BY:	DATE:	S-280
1			3			TOTAL SHEETS
2			4			321

DRAWN BY : William T. Parker DATE : 06/01/05
CHECKED BY : K.W.ALFORD DATE : 6/17/05

15-MAY-2006 11:48
J:\STRUCT~1\frye\FINAL_~1\Str9\r0609a_sd_09_fp.dgn
rwwright

STR. #9

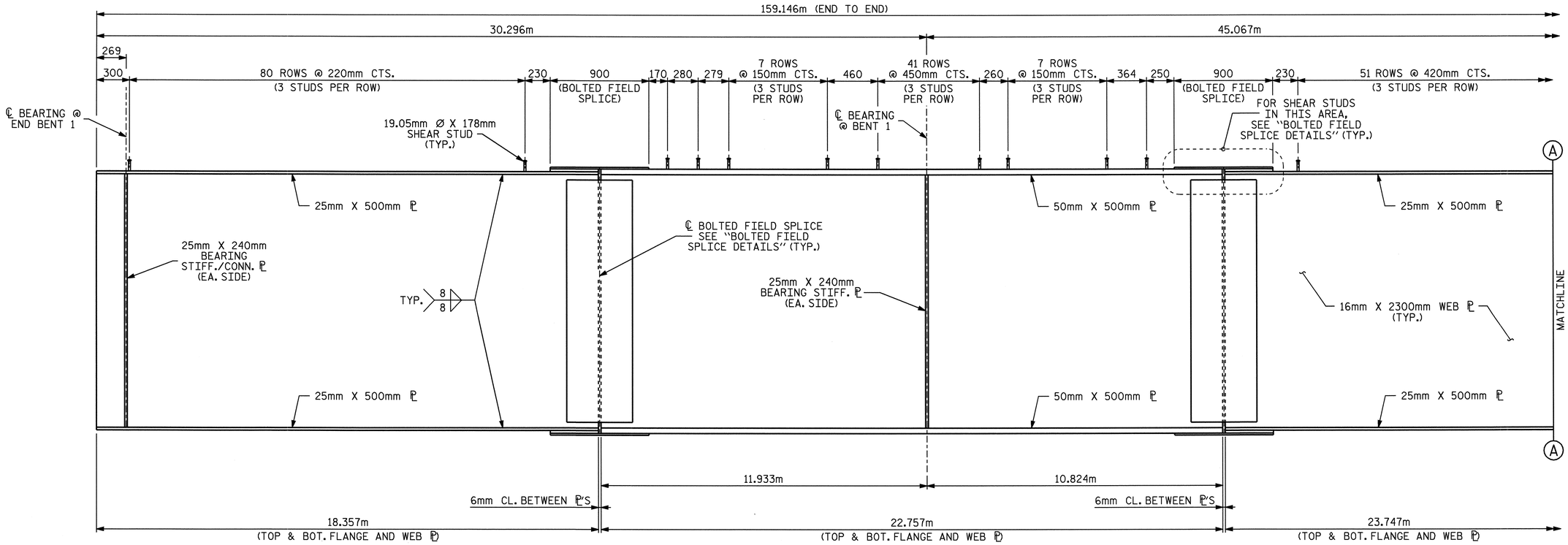

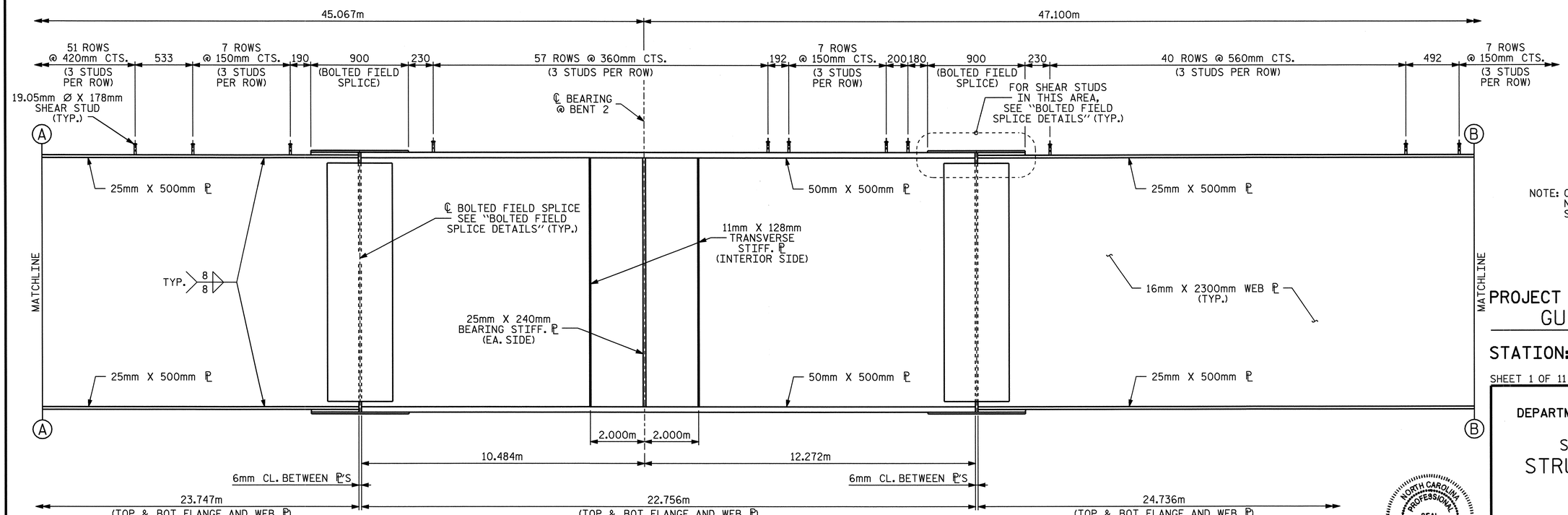

PLATE GIRDER ELEVATION

NOTE: CONNECTOR PLATES ARE NOT SHOWN. FOR PLACEMENT, SEE "FRAMING PLAN" SHEETS

PROJECT NO. R-0609IA
GUILFORD COUNTY
STATION: 19+26.763 -FLY-

SHEET 1 OF 11

STATE OF NORTH CAROLINA
DEPARTMENT OF TRANSPORTATION
RALEIGH

SUPERSTRUCTURE
STRUCTURAL STEEL DETAILS
(GIRDER 1)

NORTH CAROLINA PROFESSIONAL SEAL 23926 ENGINEER BRIAN C. HANKS
5/22/06

REVISIONS							SHEET NO.
NO.	BY:	DATE:	NO.	BY:	DATE:		S-281
1			3				TOTAL SHEETS
2			4				321

DRAWN BY : William T. Parker DATE : 06/01/05
CHECKED BY : K.W.ALFORD DATE : 6/21/05

15-MAY-2006 11:47
J:\STRUCT~1\frye\FINAL_~1\Str9\r0609ia_sd_09_ss.dgn
rwwright

STR. #9

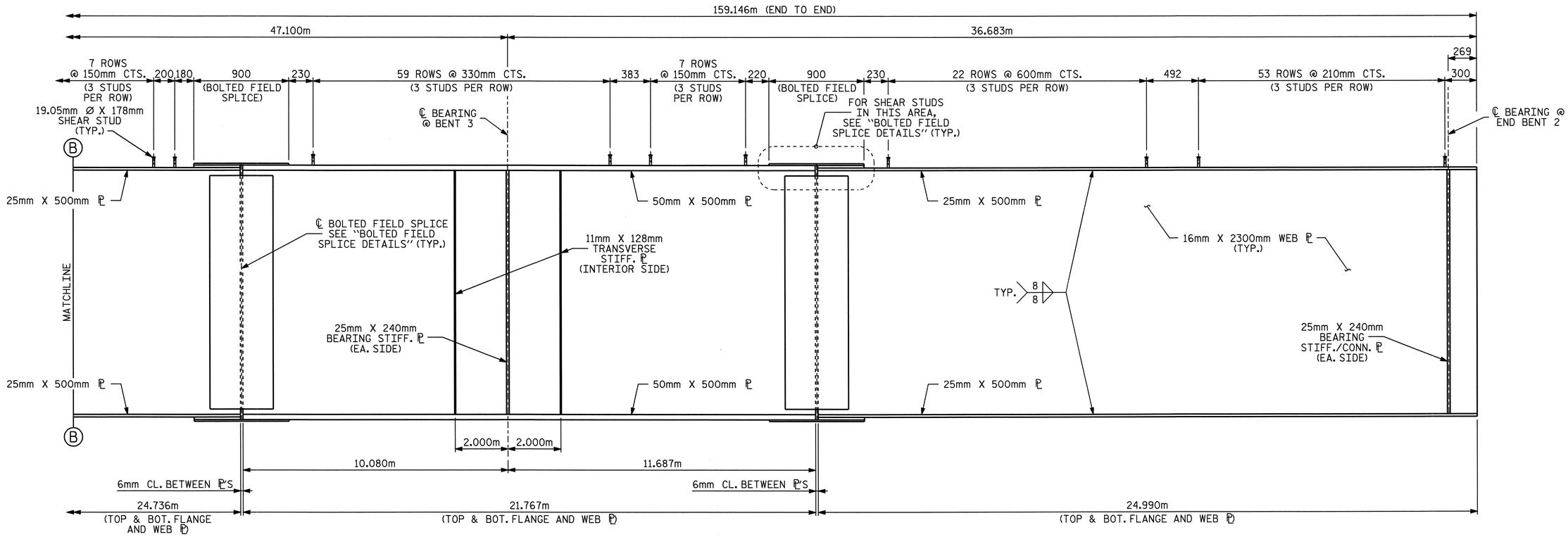

PLATE GIRDER ELEVATION

NOTE: CONNECTOR PLATES ARE NOT SHOWN. FOR PLACEMENT, SEE "FRAMING PLAN" SHEETS

PROJECT NO. R-0609IA
GUILFORD COUNTY
STATION: 19+26.763 -FLY-

SHEET 2 OF 11

STATE OF NORTH CAROLINA
DEPARTMENT OF TRANSPORTATION
RALEIGH

SUPERSTRUCTURE
STRUCTURAL STEEL DETAILS
(GIRDER 1)

NORTH CAROLINA PROFESSIONAL SEAL 23926 ENGINEER BRIAN C. HANKS
5/22/06

REVISIONS						SHEET NO.
NO.	BY:	DATE:	NO.	BY:	DATE:	S-282
1			3			TOTAL SHEETS
2			4			321

DRAWN BY : William T. Parker DATE : 06/01/05
CHECKED BY : K.W.ALFORD DATE : 6/21/05

15-MAY-2006 11:46
J:\STRUCT~1\frye\FINAL_~1\Str9\r0609a_sd_09_ss.dgn
rwwright

STR. #9

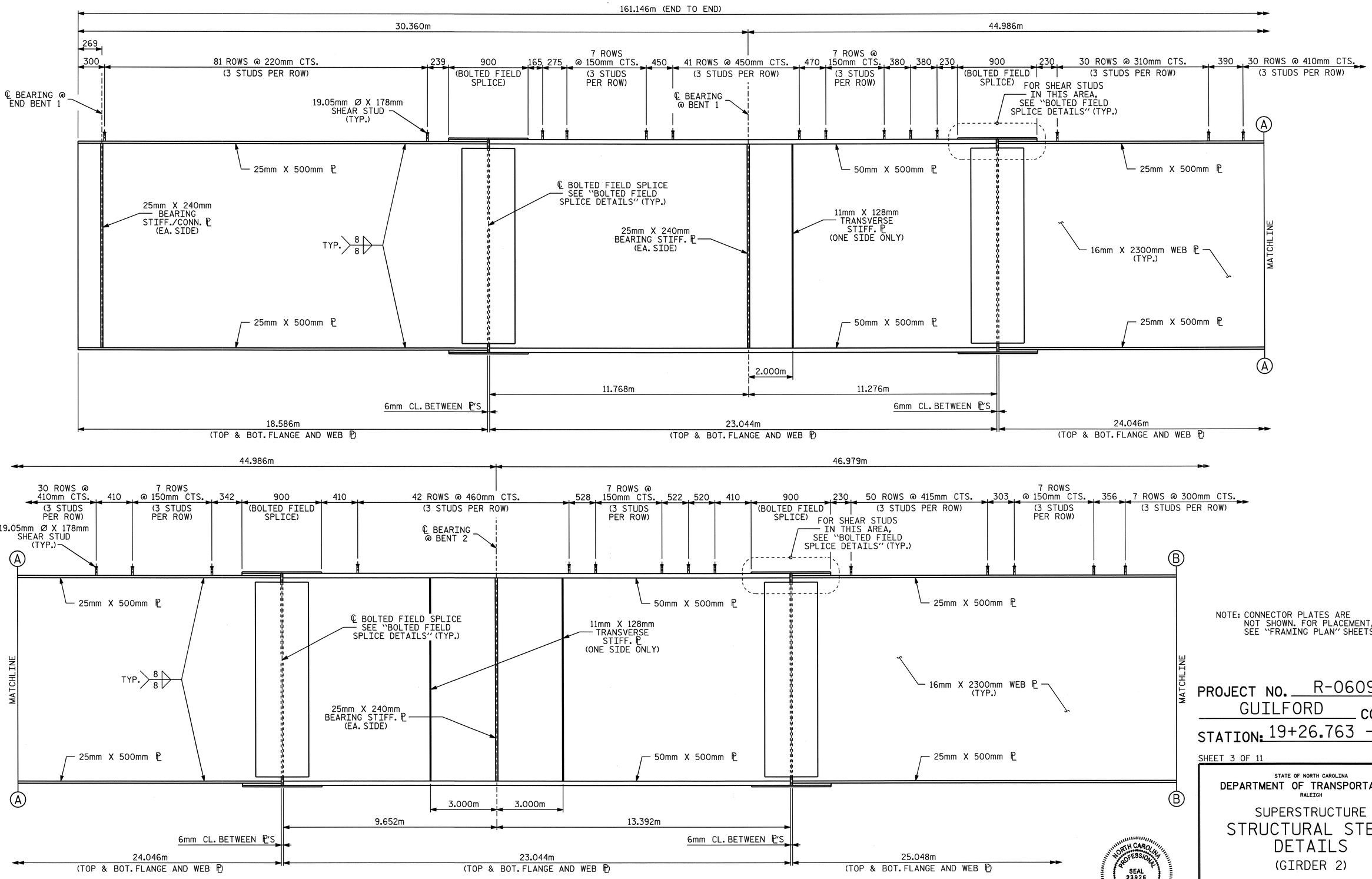

NOTE: CONNECTOR PLATES ARE NOT SHOWN. FOR PLACEMENT, SEE "FRAMING PLAN" SHEETS

PLATE GIRDER ELEVATION

PROJECT NO. R-0609IA
GUILFORD COUNTY
STATION: 19+26.763 -FLY-

SHEET 3 OF 11

STATE OF NORTH CAROLINA
DEPARTMENT OF TRANSPORTATION
RALEIGH

SUPERSTRUCTURE
STRUCTURAL STEEL DETAILS
(GIRDER 2)

NORTH CAROLINA PROFESSIONAL SEAL 23926 ENGINEER BRIAN C. HANKS
5/22/06

REVISIONS								SHEET NO.
NO.	BY:	DATE:	NO.	BY:	DATE:			S-283
1			3					TOTAL SHEETS
2			4					321

DRAWN BY : William T. Parker DATE : 06/01/05
CHECKED BY : K.W.ALFORD DATE : 6/21/05

15-MAY-2006 11:47
J:\STRUCT~1\frye\FINAL_~1\Str9\r0609ia_sd_09_ss.dgn
rwwright

STR. #9

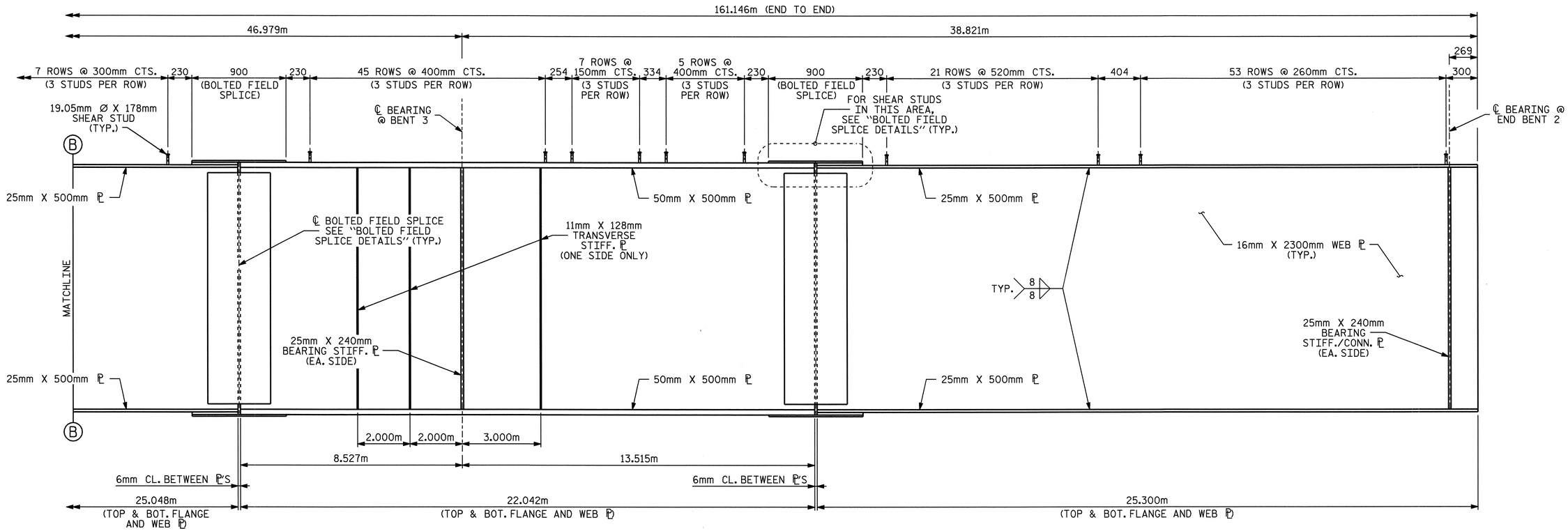

PLATE GIRDER ELEVATION

NOTE: CONNECTOR PLATES ARE NOT SHOWN. FOR PLACEMENT, SEE "FRAMING PLAN" SHEETS

PROJECT NO. R-0609IA
GUILFORD COUNTY
STATION: 19+26.763 -FLY-

SHEET 4 OF 11

STATE OF NORTH CAROLINA
DEPARTMENT OF TRANSPORTATION
RALEIGH

SUPERSTRUCTURE
STRUCTURAL STEEL DETAILS
(GIRDER 2)

NORTH CAROLINA PROFESSIONAL SEAL 23926 ENGINEER BRIAN C. HAWKINS
3/22/06

REVISIONS						SHEET NO.
NO.	BY:	DATE:	NO.	BY:	DATE:	S-284
1			3			TOTAL SHEETS
2			4			321

DRAWN BY : William T. Parker DATE : 06/01/05
CHECKED BY : K.W.ALFORD DATE : 6/21/05

15-MAY-2006 11:46
J:\STRUCT~1\frye\FINAL_~1\Str9\r0609a_sd_09_ss.dgn
rwwright

STR. #9

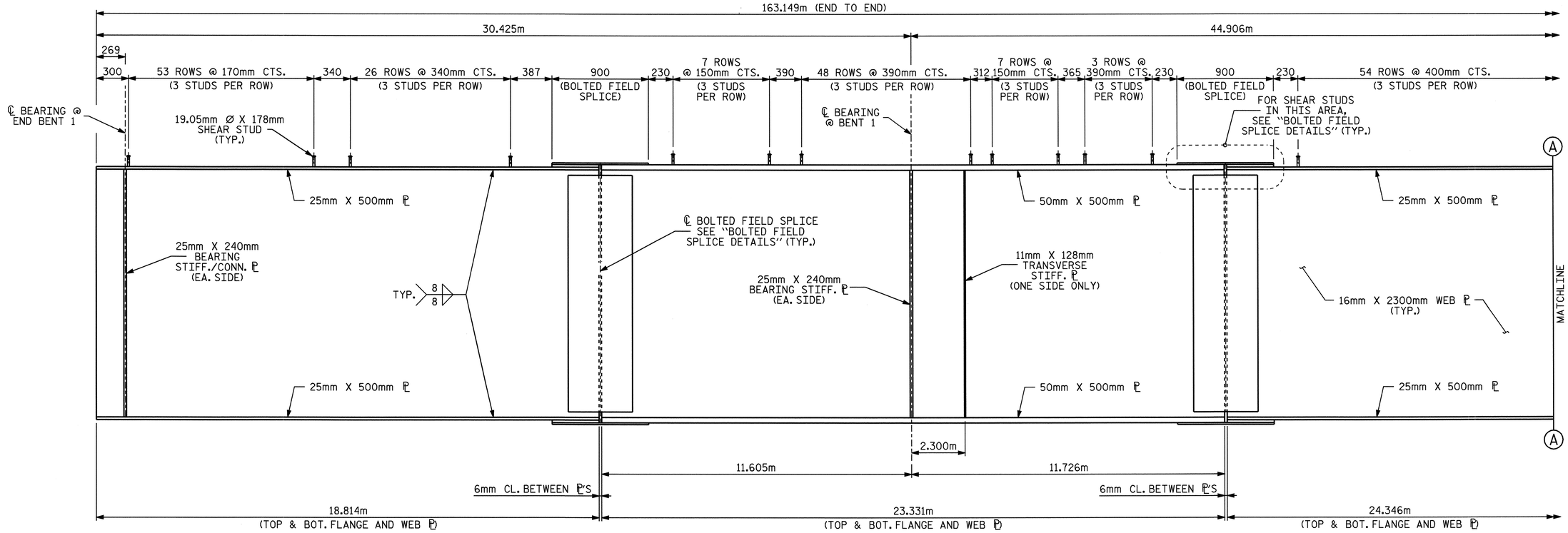

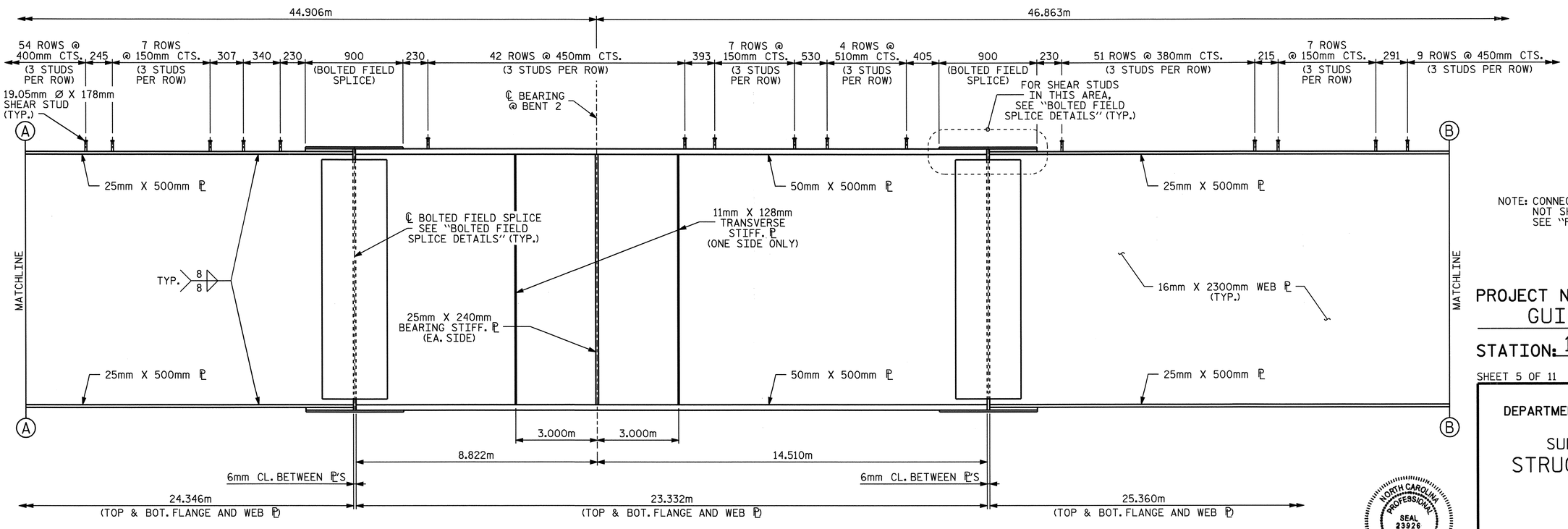

NOTE: CONNECTOR PLATES ARE NOT SHOWN. FOR PLACEMENT, SEE "FRAMING PLAN" SHEETS

PLATE GIRDER ELEVATION

PROJECT NO. R-0609IA
GUILFORD COUNTY
STATION: 19+26.763 -FLY-

SHEET 5 OF 11

STATE OF NORTH CAROLINA
DEPARTMENT OF TRANSPORTATION
RALEIGH

SUPERSTRUCTURE
STRUCTURAL STEEL DETAILS
(GIRDER 3)

NORTH CAROLINA PROFESSIONAL SEAL 23926 ENGINEER BRIAN C. HAWKS
3/22/06

REVISIONS							SHEET NO.
NO.	BY:	DATE:	NO.	BY:	DATE:		S-285
1			3				TOTAL SHEETS
2			4				321

DRAWN BY : William T. Parker DATE : 06/01/05
CHECKED BY : K.W.ALFORD DATE : 6/21/05

15-MAY-2006 11:46
J:\STRUCT~1\frye\FINAL_~1\Str9\r0609a_sd_09_ss.dgn
rwwright

STR. #9

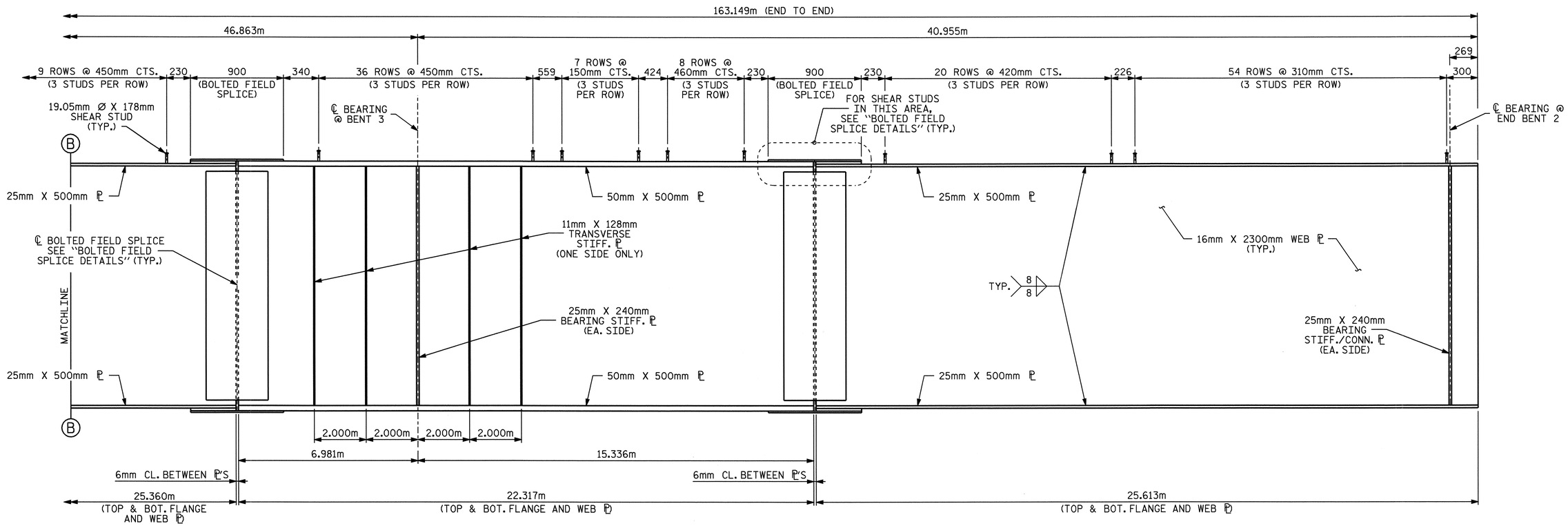

PLATE GIRDER ELEVATION

NOTE: CONNECTOR PLATES ARE NOT SHOWN. FOR PLACEMENT, SEE "FRAMING PLAN" SHEETS

PROJECT NO. R-0609IA
GUILFORD COUNTY
STATION: 19+26.763 -FLY-

SHEET 6 OF 11

STATE OF NORTH CAROLINA
DEPARTMENT OF TRANSPORTATION
RALEIGH

SUPERSTRUCTURE
STRUCTURAL STEEL DETAILS
(GIRDER 3)

NORTH CAROLINA PROFESSIONAL SEAL 23926 ENGINEER BRIAN C. HANKS
5/22/06

REVISIONS							SHEET NO.
NO.	BY:	DATE:	NO.	BY:	DATE:		S-286
1			3				TOTAL SHEETS
2			4				321

DRAWN BY : William T. Parker DATE : 06/01/05
CHECKED BY : K.W.ALFORD DATE : 6/21/05

15-MAY-2006 11:46
J:\STRUCT~1\frye\FINAL_~1\Str9\r0609a_sd_09_ss.dgn
rwwright

STR. #9

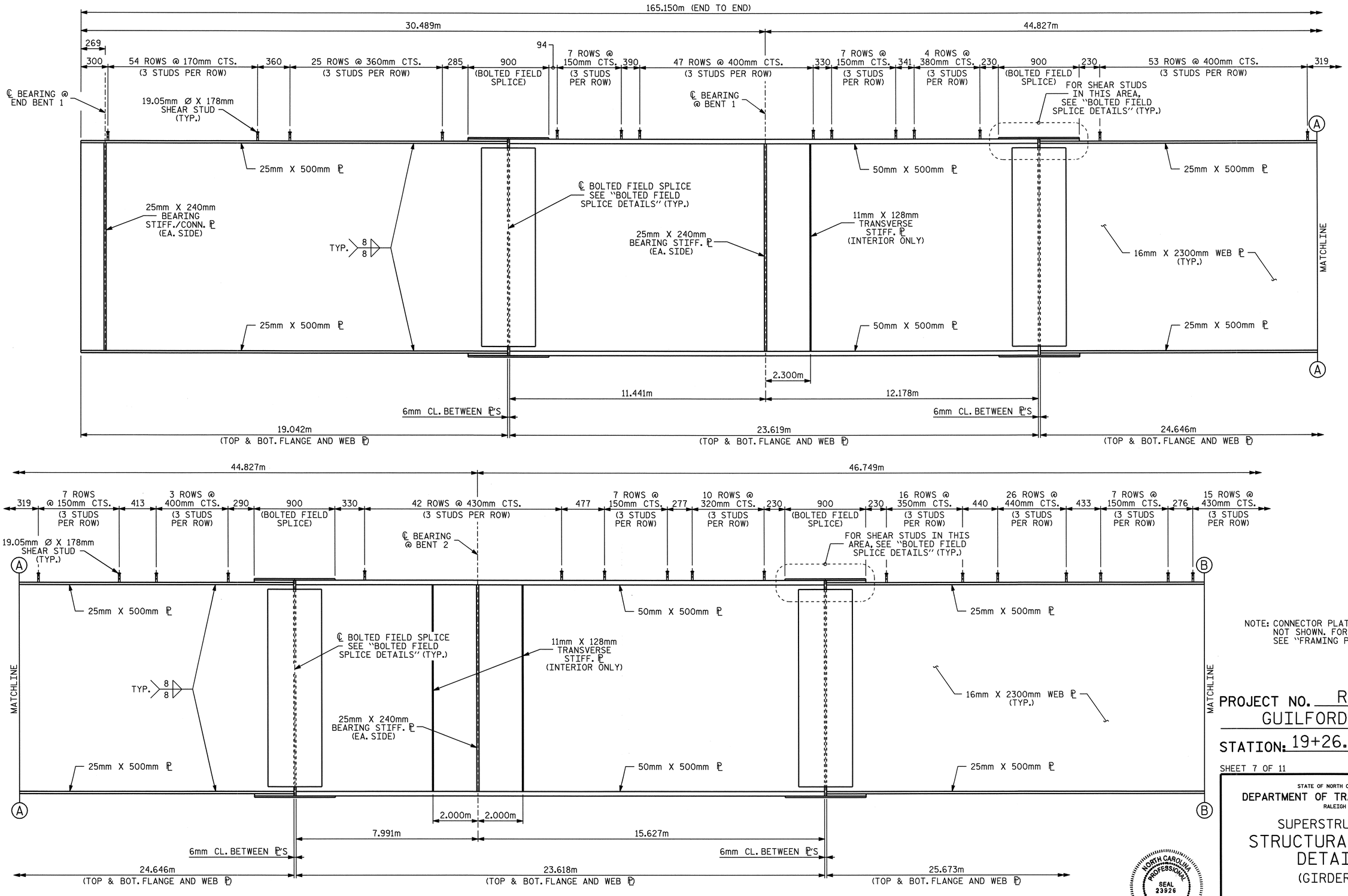

NOTE: CONNECTOR PLATES ARE NOT SHOWN. FOR PLACEMENT, SEE "FRAMING PLAN" SHEETS

PROJECT NO. R-0609IA
GUILFORD COUNTY
STATION: 19+26.763 -FLY-

SHEET 7 OF 11

STATE OF NORTH CAROLINA
DEPARTMENT OF TRANSPORTATION
RALEIGH

SUPERSTRUCTURE
STRUCTURAL STEEL DETAILS
(GIRDER 4)

NORTH CAROLINA PROFESSIONAL SEAL 23926 ENGINEER BRIAN C. HANKS
5/22/06

REVISIONS								SHEET NO.
NO.	BY:	DATE:	NO.	BY:	DATE:			S-287
1			3					TOTAL SHEETS
2			4					321

PLATE GIRDER ELEVATION

DRAWN BY : William T. Parker DATE : 06/01/05
CHECKED BY : K.W.ALFORD DATE : 6/21/05

15-MAY-2006 11:46
J:\STRUCT~1\frye\FINAL_~1\Str9\r0609ia_sd_09_ss.dgn
rwwright

STR. #9

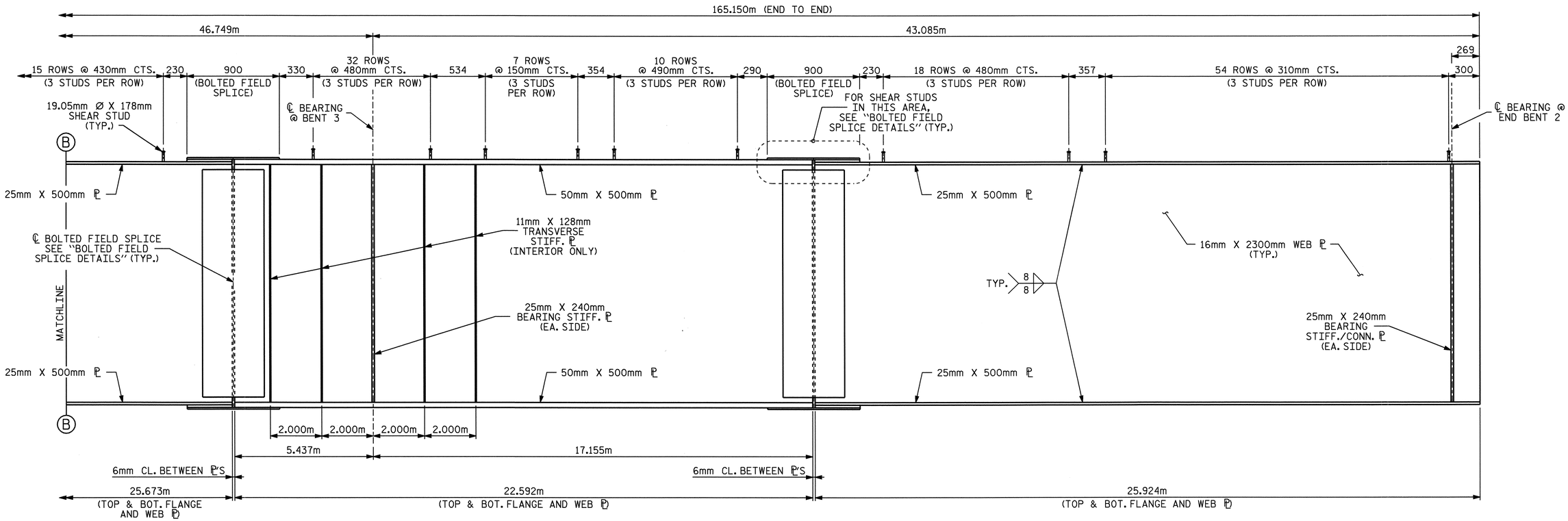

PLATE GIRDER ELEVATION

NOTE: CONNECTOR PLATES ARE NOT SHOWN. FOR PLACEMENT, SEE "FRAMING PLAN" SHEETS

PROJECT NO. R-0609IA
GUILFORD COUNTY
STATION: 19+26.763 -FLY-

SHEET 8 OF 11

STATE OF NORTH CAROLINA
DEPARTMENT OF TRANSPORTATION
RALEIGH

SUPERSTRUCTURE
STRUCTURAL STEEL DETAILS
(GIRDER 4)

NORTH CAROLINA PROFESSIONAL SEAL 23926 ENGINEER BRIAN C. HAWKS
5/22/06

REVISIONS						SHEET NO.
NO.	BY:	DATE:	NO.	BY:	DATE:	S-288
1			3			TOTAL SHEETS
2			4			321

DRAWN BY : William T. Parker DATE : 06/01/05
CHECKED BY : K.W.ALFORD DATE : 6/21/05

15-MAY-2006 11:45
J:\STRUCT~1\frye\FINAL_~1\Str9\r0609a_sd_09_ss.dgn
rwwright

STR. #9

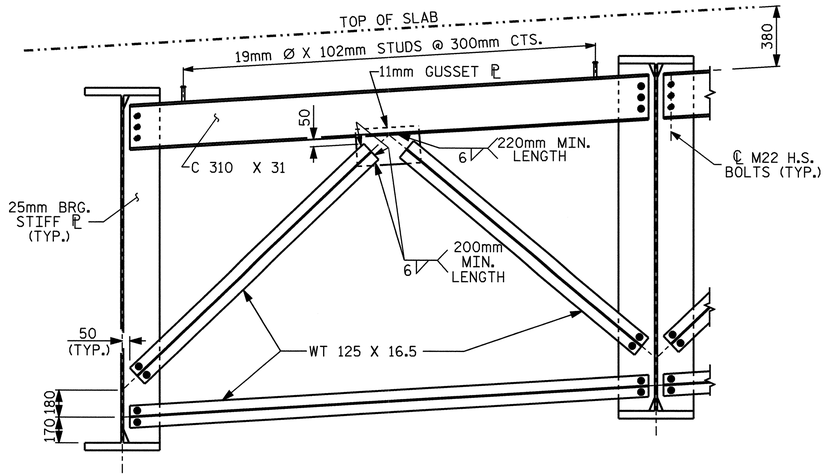

END BENT DIAPHRAGM (D1)

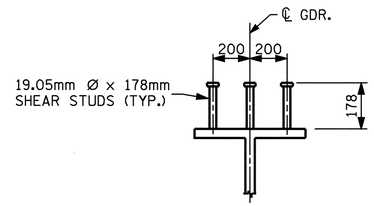

SHEAR STUD DETAILS

(TYP. ALL GIRDERS)

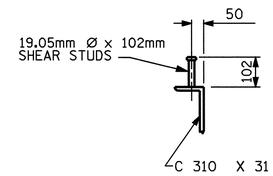

SHEAR STUD DETAILS

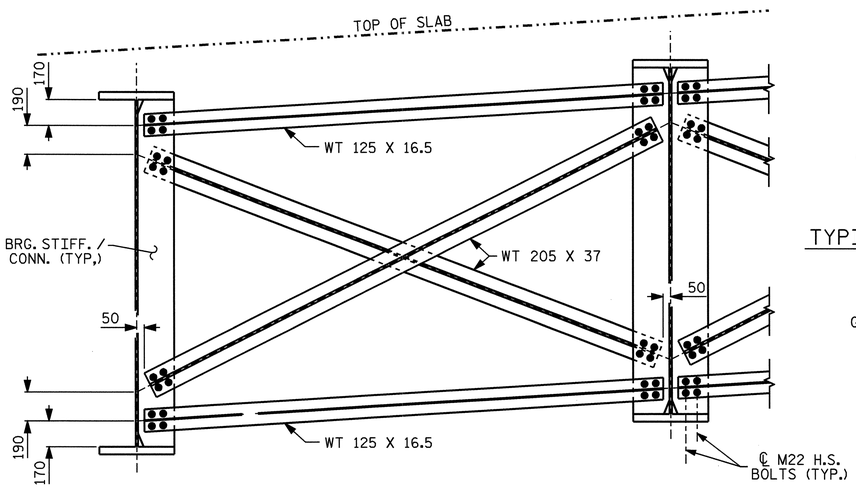

INTERMEDIATE DIAPHRAGM (D2)

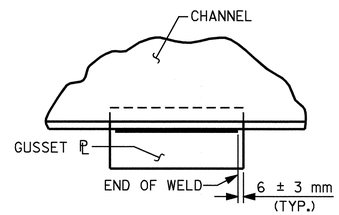

TYPICAL GUSSET PLATE CONNECTION

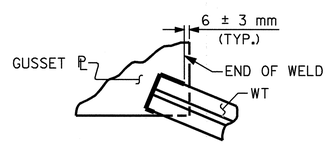

TYPICAL "TEE" TO GUSSET PLATE CONNECTION

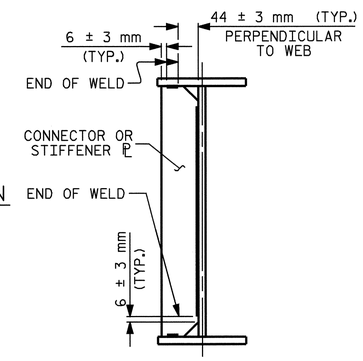

TYPICAL STIFFENER OR CONNECTOR PLATE CONNECTIONS

WELD TERMINATION DETAILS

NOTES

ALL STRUCTURAL STEEL SHALL BE AASHTO M270 GRADE 345W AND PAINTED IN ACCORDANCE WITH SYSTEM 4 OF ARTICLE 442-7 OF THE STANDARD SPECIFICATIONS UNLESS OTHERWISE NOTED ON THE PLANS.

ALL DIMENSIONS SHOWN ARE HORIZONTAL OR VERTICAL, UNLESS OTHERWISE NOTED.

ALL FIELD CONNECTIONS TO BE 22.23mm DIA. HIGH STRENGTH BOLTS UNLESS OTHERWISE NOTED.

BEARING STIFFENERS ARE TO BE PLACED NORMAL TO THE WEB OF THE GIRDER AND SHALL BE PLUMB.

SHOP SPLICES ARE PERMITTED TO LIMIT THE MAXIMUM REQUIRED FLANGE PIECE LENGTHS TO 18 METERS AND WEB PIECE LENGTHS TO 14 METERS. PERMITTED FLANGE AND WEB SHOP SPLICES SHALL NOT BE LOCATED WITHIN 4.5 METERS OF MAXIMUM DEAD LOAD DEFLECTION (NOR WITHIN 4.5 METERS OF INTERMEDIATE BEARINGS OF CONTINUOUS UNITS). KEEP 600mm MINIMUM BETWEEN WEB AND FLANGE SHOP SPLICES. KEEP 150mm MINIMUM BETWEEN CONNECTOR PLATE OR TRANSVERSE STIFFENER WELDS AND WEB OR FLANGE SHOP SPLICES.

STUDS ON GIRDERS MAY BE SHIFTED UP TO 25mm IF NECESSARY TO CLEAR FLANGE SPLICE WELD.

TENSION ON THE AASHTO M164 BOLTS SHALL BE CALIBRATED USING DIRECT TENSION INDICATOR WASHERS IN ACCORDANCE WITH ARTICLE 440-10 OF THE STANDARD SPECIFICATIONS.

END OF GIRDERS SHALL BE PLUMB.

FOR CHARPY V-NOTCH TEST, SEE SPECIAL PROVISIONS.

THE CONTRACTOR SHALL MAINTAIN STABILITY OF THE CURVED GIRDERS UNTIL ALL FIELD SPLICES AND CROSSFRAME CONNECTIONS HAVE BEEN COMPLETED. STRUCTURAL STEEL ERECTION IN A CONTINUOUS UNIT SHALL BE COMPLETE BEFORE FALSEWORK OR FORMS ARE PLACED ON THE UNIT.

CURVATURE OF STEEL FLANGE PLATES MAY BE ACCOMPLISHED BY CUTTING PLATES TO THE REQUIRED CURVATURE OR BY HEAT TREATMENT.

FOR HEAT CURVING FOR BRIDGE AT STA. 19+26.763 -FLY-, SEE SPECIAL PROVISIONS.

FOR METRIC STRUCTURAL STEEL, SEE SPECIAL PROVISIONS.

BEARING STIFFENER MAY REQUIRE COPING IF WIDER THAN BOTTOM FLANGE TO AVOID INTERFERENCE WITH THE ANCHOR BOLT.

STIFFENERS ARE NOT REQUIRED ON THE OUTSIDE OF EXTERIOR GIRDERS.

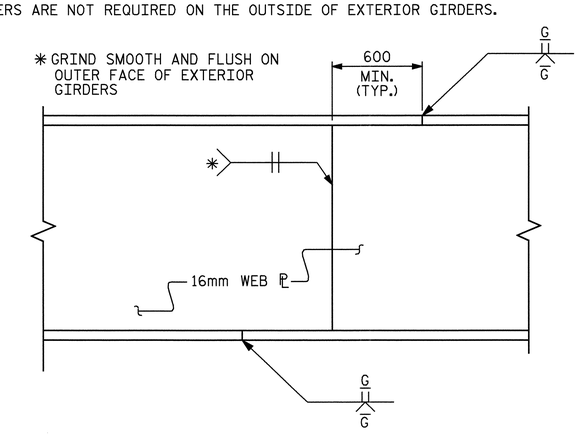

ELEVATION

PERMISSIBLE SHOP FLANGE AND WEB SPLICE

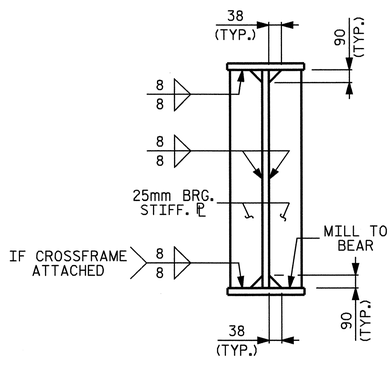

BEARING STIFFENER

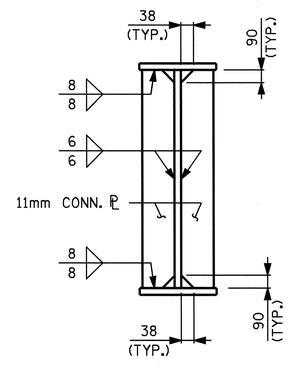

CONNECTOR PLATE

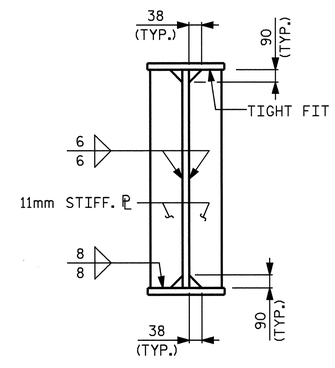

TRANSVERSE STIFFENER

PROJECT NO. R-0609IA
GUILFORD COUNTY
STATION: 19+26.763 -FLY-

SHEET 9 OF 11

STATE OF NORTH CAROLINA
DEPARTMENT OF TRANSPORTATION
RALEIGH

SUPERSTRUCTURE
STRUCTURAL STEEL DETAILS

NORTH CAROLINA PROFESSIONAL SEAL 23926 ENGINEER BRIAN C. HAWKS
5/22/06

REVISIONS								SHEET NO.
NO.	BY:	DATE:	NO.	BY:	DATE:			S-289
1			3					TOTAL SHEETS
2			4					321

DRAWN BY : William T. Parker DATE : 06/01/05
CHECKED BY : K.W.ALFORD DATE : 6/21/05

15-MAY-2006 11:45
J:\STRUCT~1\frye\FINAL_~1\Str9\r0609ia_sd_09_ss.dgn
rwwright

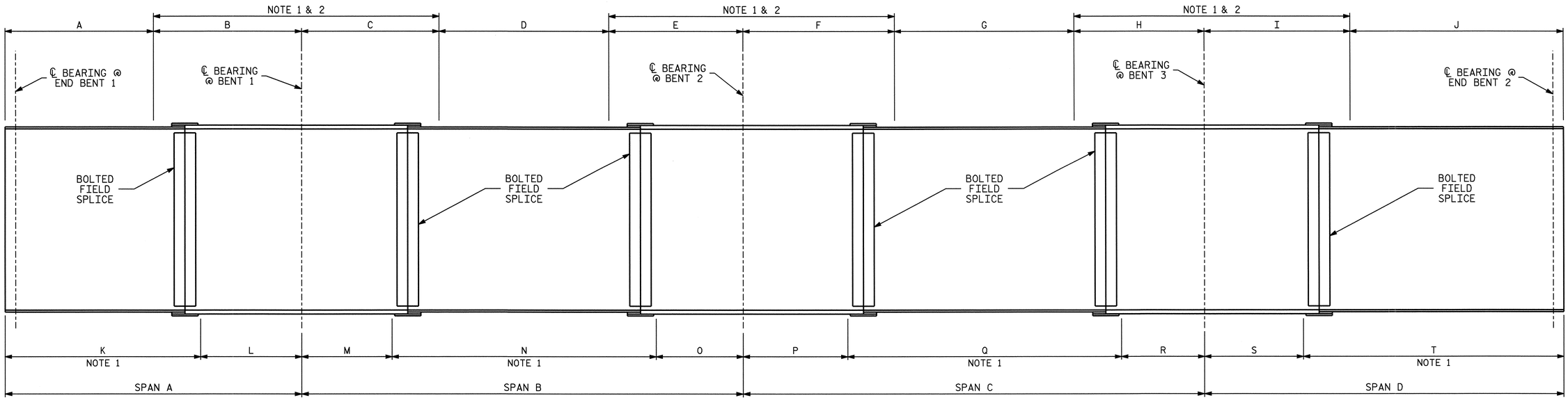

ELEVATION

TABLE FOR CHARPY V-NOTCH TEST																									
GIRDER	RADIUS	SPAN A	SPAN B	SPAN C	SPAN D	A	B	C	D	E	F	G	H	I	J	K	L	M	N	O	P	Q	R	S	T
1	282.060	30.296	45.067	47.100	36.683	13.096	17.200	12.600	15.667	16.800	15.900	15.900	15.300	16.200	20.483	23.200	7.096	7.090	29.800	8.177	8.210	30.610	8.280	7.783	28.900
2	285.620	30.360	44.986	46.979	38.821	13.360	17.000	12.300	16.586	16.100	16.000	14.479	16.500	15.000	23.821	23.400	6.960	6.900	30.400	7.686	8.030	30.360	8.589	7.821	31.000
3	289.180	30.425	44.906	46.863	40.955	12.725	17.700	12.400	16.506	16.000	16.800	12.263	17.800	14.800	26.155	23.400	7.025	6.980	30.400	7.526	7.910	29.910	9.043	7.955	33.000
4	292.740	30.489	44.827	46.749	43.085	9.989	20.500	13.200	13.727	17.900	46.749	0.000	0.000	16.200	26.885	23.600	6.889	7.050	30.500	7.277	7.950	29.750	9.049	8.285	34.800

NOTE 1 : CHARPY V-NOTCH TESTS ARE REQUIRED FOR ALL TOP OR BOTTOM FLANGE PLATES WHICH FALL WITHIN THESE LIMITS, ALL WEB PLATES, ALL SPLICE PLATES, AND ALL CROSSFRAME COMPONENTS AND CONNECTOR PLATES. IF A PERMITTED SHOP FLANGE SPLICE IS NOT USED, CHARPY V-NOTCH TESTS WILL BE REQUIRED FOR THE ENTIRE FLANGE PLATE. FOR CHARPY V-NOTCH TESTS, SEE ARTICLE 1072-9 OF THE STANDARD SPECIFICATIONS, AND SPECIAL PROVISIONS.

NOTE 2 : NO WELDING OF FORMS OR FALSEWORK TO THE TOP FLANGE WILL BE PERMITTED IN THIS REGION.

CHARPY V-NOTCH TEST FOR CONTINUOUS PLATE GIRDERS

PROJECT NO. R-0609IA
GUILFORD COUNTY
STATION: 19+26.763 -FLY-

SHEET 10 OF 11

STATE OF NORTH CAROLINA
DEPARTMENT OF TRANSPORTATION
RALEIGH

SUPERSTRUCTURE
STRUCTURAL STEEL DETAILS

NORTH CAROLINA PROFESSIONAL SEAL 23926 ENGINEER BRIAN C. HANKINS
5/22/06

REVISIONS						SHEET NO.
NO.	BY:	DATE:	NO.	BY:	DATE:	S-290
1			3			TOTAL SHEETS
2			4			321

DRAWN BY : William T. Parker DATE : 06/01/05
CHECKED BY : K.W.ALFORD DATE : 6/21/05

15-MAY-2006 11:44
J:\STRUCT~1\frye\FINAL_~1\Str9\r0609a_sd_09_ss.dgn
rwwright

STR. #9

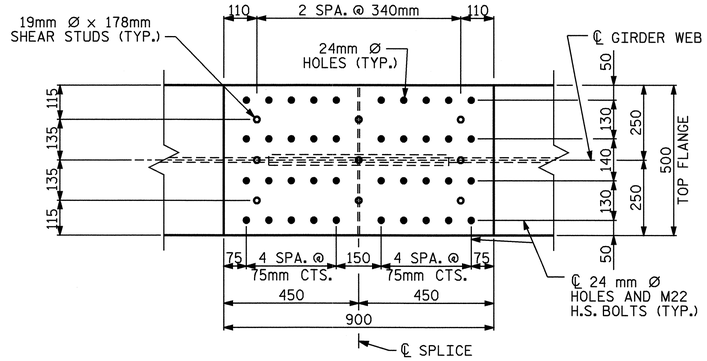

PLAN (TOP OF TOP FLANGE)

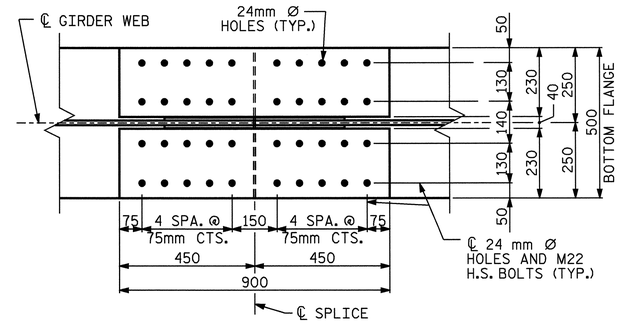

PLAN (TOP OF BOTTOM FLANGE)

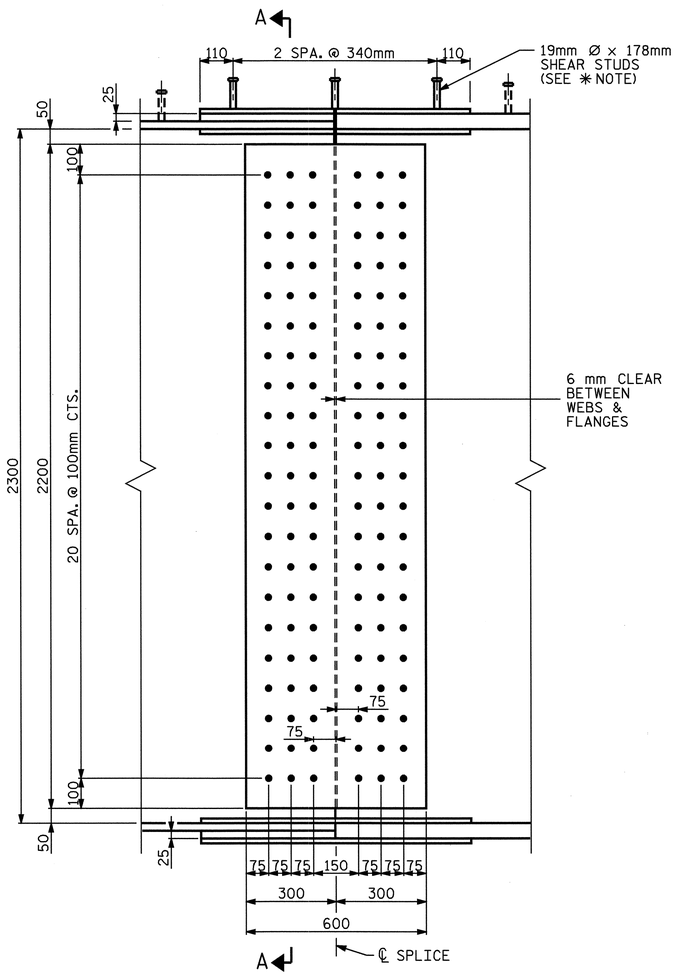

ELEVATION

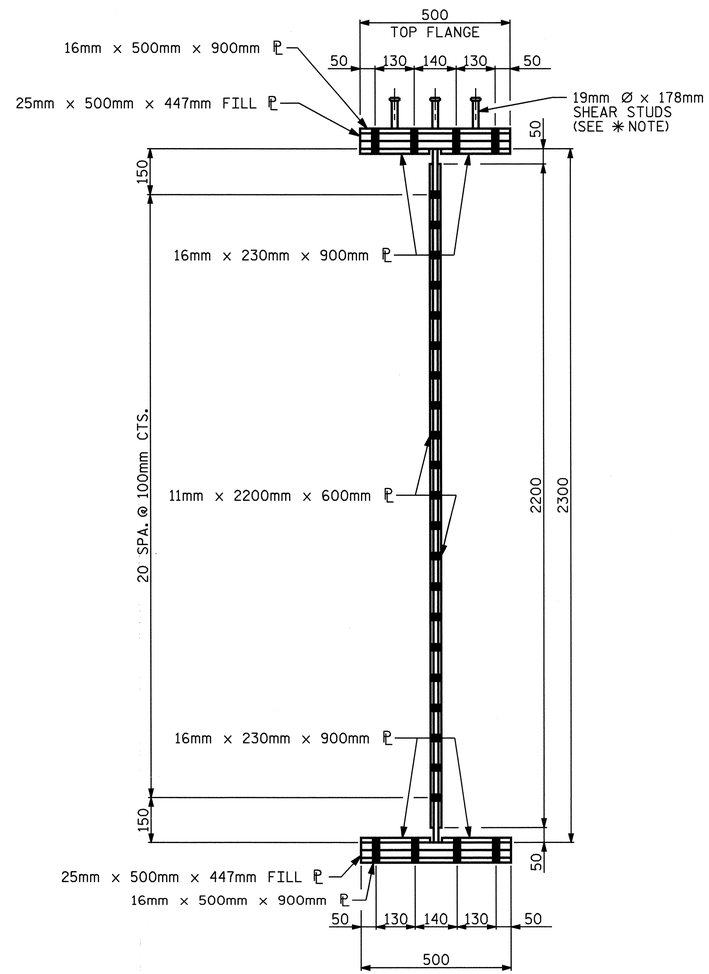

SECTION A-A

✳ NOTE: SHEAR STUDS ARE TO BE SHOP WELDED ON TOP OF PLATE BEFORE FIELD ASSEMBLY

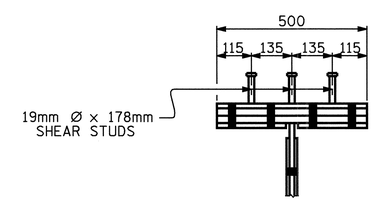

SHEAR STUD DETAIL
FOR TOP FLANGE SPLICE PLATE

BOLTED FIELD SPLICE DETAILS

(TYPICAL EACH FIELD SPLICE)

PROJECT NO. R-0609IA
GUILFORD COUNTY
STATION: 19+26.763 -FLY-

SHEET 11 OF 11

STATE OF NORTH CAROLINA
DEPARTMENT OF TRANSPORTATION
RALEIGH

SUPERSTRUCTURE
STRUCTURAL STEEL DETAILS
BOLTED FIELD SPLICE

NORTH CAROLINA PROFESSIONAL SEAL 23926 ENGINEER BRIAN C. HANKS
5/22/06

REVISIONS						SHEET NO.
NO.	BY:	DATE:	NO.	BY:	DATE:	S-291
1			3			TOTAL SHEETS
2			4			321

DRAWN BY : William T. Parker DATE : 06/01/05
CHECKED BY : K.W.ALFORD DATE : 6/21/05

15-MAY-2006 11:43
J:\STRUCT~1\frye\FINAL_~1\Str9\r0609a_sd_09_ss.dgn
rwwright

STR. #9

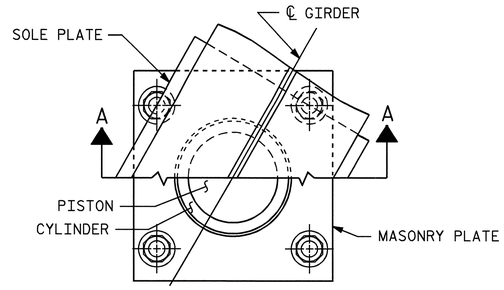

CUT-AWAY PLAN

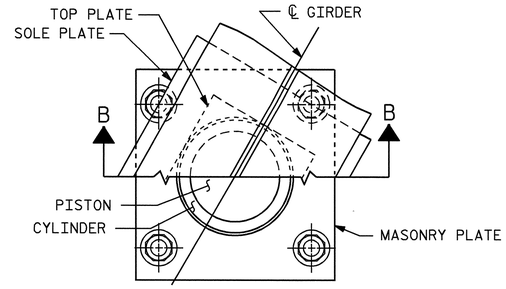

CUT-AWAY PLAN

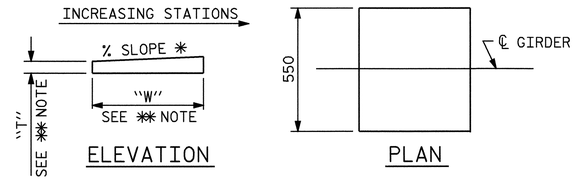

ELEVATION

PLAN

✱✱ NOTE:
DIMENSIONS "W" AND "T" ARE TO BE DETERMINED BY THE MANUFACTURER.

SOLE PLATE DETAILS

✱ AT END BENT 1, USE 1.200% SLOPE
AT BENT 1, USE 1.000% SLOPE
AT BENT 2, USE 0.550% SLOPE
AT BENT 3, USE 0.050% SLOPE
AT END BENT 2, USE -0.200% SLOPE

NOTES

FOR POT BEARINGS, SEE SPECIAL PROVISIONS.

AT ALL POINTS OF SUPPORT, NUTS FOR ANCHOR BOLTS SHALL BE TIGHTENED FINGER TIGHT AND GIVEN AN ADDITIONAL 1/4 TURN. THE THREAD OF THE NUT AND BOLT SHALL THEN BE BURRED WITH A SHARP POINTED TOOL.

WHEN WELDING THE SOLE PLATE TO THE GIRDER, USE TEMPERATURE INDICATING WAX PENS, OR OTHER SUITABLE MEANS, TO ENSURE THAT THE TEMPERATURE OF THE BEARING DOES NOT EXCEED 121°C TEMPERATURES ABOVE THIS MAY DAMAGE THE TFE OR ELASTOMER.

AFTER BEARING ASSEMBLY IS IN PLACE AND ANCHOR BOLTS HAVE BEEN FINALLY POSITIONED, THEY SHALL BE GROUTED IN PLACE AS SHOWN.

THE CLOSURE PLATE, GROUT PIPE AND STANDARD PIPE FOR THIS ASSEMBLY NEED NOT BE GALVANIZED.

SOLE PLATES SHOULD BE WELDED TO BEAM FLANGES AND ANCHOR BOLTS SHOULD BE GROUTED BEFORE FALSEWORK IS PLACED.

ALL SURFACES OF BEARING PLATES SHALL BE SMOOTH AND STRAIGHT.

FOR THERMAL SPRAYED COATINGS (METALLIZATION), SEE SPECIAL PROVISIONS.

THE CONTRACTOR MAY SUBSTITUTE DISC BEARINGS FOR THE POT BEARINGS SHOWN. FOR OPTIONAL DISC BEARINGS, SEE SPECIAL PROVISIONS.

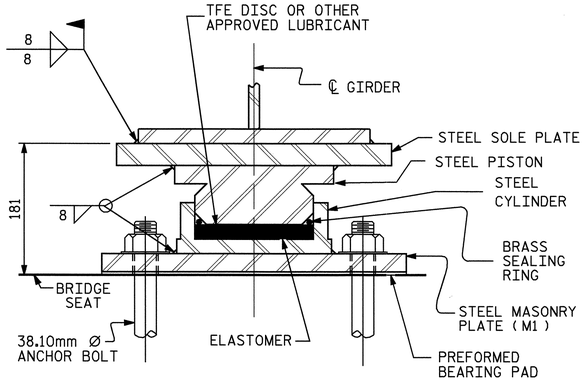

SECTION A-A

PB1, FIXED
(4 REQ'D.)

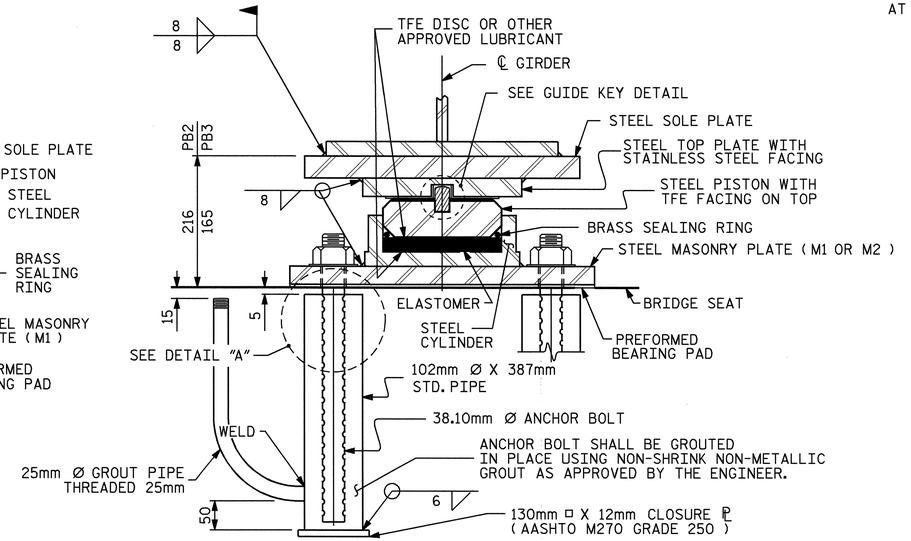

SECTION B-B

PB2, EXP.
(8 REQ'D.)

PB3, EXP.
(8 REQ'D.)

POT BEARING DETAILS

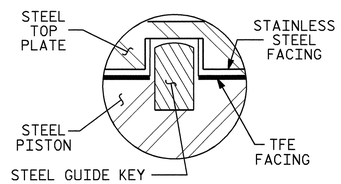

GUIDE KEY DETAIL

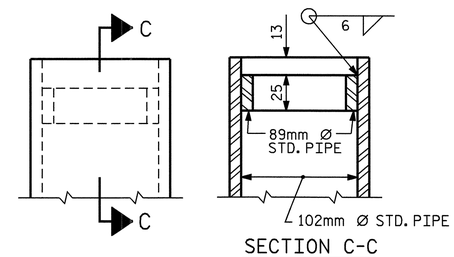

SECTION C-C

DETAIL "A"

TABLE FOR LOADS AND MOVEMENTS						
BEARING	LOCATION	VERTICAL LOAD (kN)			LATERAL LOAD (kN)	TOTAL MOVEMENT (mm)
		DEAD	LIVE	TOTAL		
PB3 (EXP.)	END BENT 1	346	274	620	69	63
PB2 (EXP.)	BENT 1	1568	538	2106	314	38
PB1 (FIXED)	BENT 2	1690	581	2271	338	0
PB2 (EXP.)	BENT 3	1964	597	2561	393	40
PB3 (EXP.)	END BENT 2	586	326	912	117	75

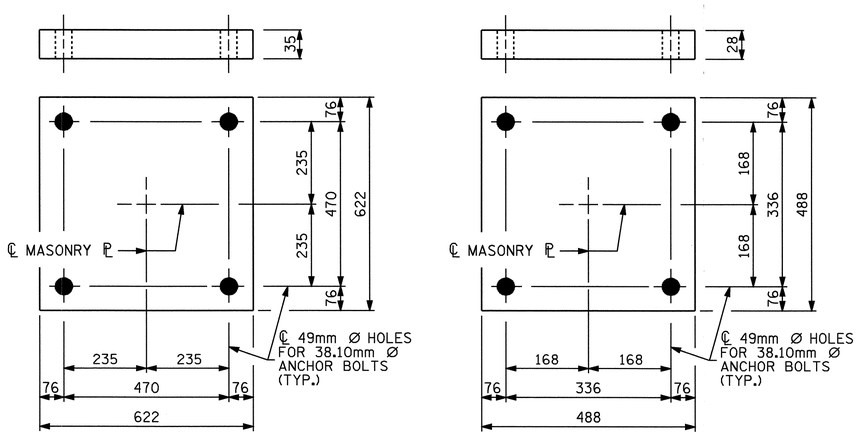

PLAN
M1 (12 REQ'D.)

PLAN
M2 (8 REQ'D.)

MASONRY PLATE DETAILS

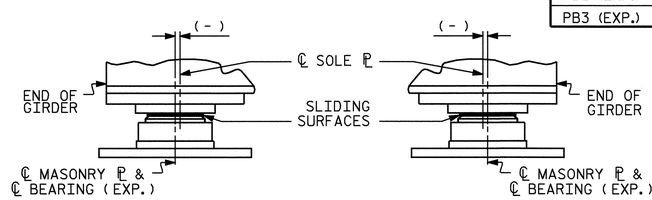

END BENT 1 & BENT 1

BENT 3 & END BENT 2

TABLE FOR PLATE SETTING DATA (EXPANSION POT BEARINGS)				
TEMPERATURE AT TIME OF SETTING	0° C	16° C	32° C	✱
END BENT 1	-18	0	18	-8
BENT 1	-11	0	11	-6
BENT 3	-10	0	10	-4
END BENT 2	-22	0	22	-14

✱CORRECTION FOR END ROTATION DUE TO WEIGHT OF SLAB AND COMPOSITE DEAD LOAD.

TEMPERATURE SETTING DETAIL

PROJECT NO. R-0609IA
GUILFORD COUNTY
STATION: 19+26.763 -FLY-

STATE OF NORTH CAROLINA
DEPARTMENT OF TRANSPORTATION
RALEIGH

SUPERSTRUCTURE
POT BEARING DETAILS

NORTH CAROLINA PROFESSIONAL SEAL 23926 ENGINEER BRIAN C. HANKS
5/22/06

ASSEMBLED BY : William T. Parker	DATE : 06/01/05
CHECKED BY : K.W.ALFORD	DATE : 6/22/05
DRAWN BY : RWW 8/99	REV. 10/17/00 RWW/LES
CHECKED BY : LES 8/99	REV. 7/10/01 LES/RWW
	REV. 5/7/03 RWW/JTE

REVISIONS								SHEET NO.
NO.	BY:	DATE:	NO.	BY:	DATE:			S-292
1			3					TOTAL SHEETS
2			4					321

STR. #9

PB1SM.STD

15-MAY-2006 11:42
J:\STRUCT~1\frye\FINAL_~1\Str9\r0609ia_sd_09_bg.dgn
rwwright

DEAD LOAD DEFLECTION TABLE FOR GIRDERS

GIRDER #1

SPAN A

TWENTIETH POINTS	BRG.	.05	.10	.15	.20	.25	.30	.35	.40	.45	.50	.55	.60	.65	.70	.75	.80	.85	.90	.95	BRG.
DEFLECTION DUE TO GIRDER	0	0	-0.001	-0.001	-0.001	-0.001	-0.001	-0.002	-0.002	-0.001	-0.001	-0.001	-0.001	-0.001	-0.001	0	0	0	0	0	0
DEFLECTION DUE TO SLAB ✳	0	-0.002	-0.002	-0.003	-0.004	-0.005	-0.006	-0.005	-0.005	-0.006	-0.005	-0.004	-0.003	-0.002	-0.001	-0.001	-0.001	0	0.001	0.001	0
DEFLECTION DUE TO RAIL	0	0	0	0	0	0	0	0	0	0	0	0	0	0	0	0	0	0	0	0	0
TOTAL DEAD LOAD DEFLECTION	0	-0.002	-0.003	-0.004	-0.005	-0.006	-0.007	-0.007	-0.007	-0.007	-0.006	-0.005	-0.004	-0.003	-0.002	-0.001	-0.001	0	0.001	0.001	0
VERTICAL CURVE ORDINATE	0	0.003	0.005	0.007	0.008	0.010	0.011	0.012	0.013	0.013	0.013	0.013	0.013	0.012	0.011	0.010	0.008	0.007	0.005	0.003	0
REQUIRED CAMBER	0	5	8	11	13	16	18	19	20	20	19	18	17	15	13	11	9	7	4	2	0

SPAN B

TWENTIETH POINTS	BRG.	.05	.10	.15	.20	.25	.30	.35	.40	.45	.50	.55	.60	.65	.70	.75	.80	.85	.90	.95	BRG.
DEFLECTION DUE TO GIRDER	0	0	-0.001	-0.002	-0.002	-0.003	-0.004	-0.005	-0.005	-0.005	-0.005	-0.005	-0.005	-0.004	-0.003	-0.003	-0.002	-0.001	-0.001	0	0
DEFLECTION DUE TO SLAB ✳	0	-0.002	-0.004	-0.005	-0.009	-0.012	-0.014	-0.015	-0.017	-0.019	-0.019	-0.018	-0.016	-0.015	-0.013	-0.009	-0.006	-0.005	-0.002	-0.001	0
DEFLECTION DUE TO RAIL	0	0	0	-0.001	-0.001	-0.001	-0.001	-0.002	-0.002	-0.002	-0.002	-0.002	-0.002	-0.001	-0.001	-0.001	-0.001	0	0	0	0
TOTAL DEAD LOAD DEFLECTION	0	-0.002	-0.005	-0.008	-0.012	-0.016	-0.019	-0.022	-0.024	-0.026	-0.026	-0.025	-0.023	-0.020	-0.017	-0.013	-0.009	-0.006	-0.003	-0.001	0
VERTICAL CURVE ORDINATE	0	0.006	0.011	0.015	0.019	0.022	0.025	0.027	0.028	0.029	0.029	0.029	0.028	0.027	0.025	0.022	0.019	0.015	0.011	0.006	0
REQUIRED CAMBER	0	8	16	23	31	38	44	49	52	55	55	54	51	47	42	35	28	21	14	7	0

SPAN C

TWENTIETH POINTS	BRG.	.05	.10	.15	.20	.25	.30	.35	.40	.45	.50	.55	.60	.65	.70	.75	.80	.85	.90	.95	BRG.
DEFLECTION DUE TO GIRDER	0	0	-0.001	-0.002	-0.002	-0.003	-0.004	-0.005	-0.005	-0.005	-0.006	-0.005	-0.005	-0.004	-0.004	-0.003	-0.002	-0.001	-0.001	0	0
DEFLECTION DUE TO SLAB ✳	0	-0.001	-0.002	-0.004	-0.008	-0.011	-0.014	-0.015	-0.018	-0.019	-0.019	-0.019	-0.018	-0.016	-0.013	-0.011	-0.007	-0.005	-0.002	-0.001	0
DEFLECTION DUE TO RAIL	0	0	0	-0.001	-0.001	-0.001	-0.001	-0.002	-0.002	-0.002	-0.002	-0.002	-0.002	-0.002	-0.001	-0.001	-0.001	-0.001	0	0	0
TOTAL DEAD LOAD DEFLECTION	0	-0.001	-0.003	-0.007	-0.011	-0.015	-0.019	-0.022	-0.025	-0.026	-0.027	-0.026	-0.025	-0.022	-0.018	-0.015	-0.010	-0.007	-0.003	-0.001	0
VERTICAL CURVE ORDINATE	0	0.006	0.012	0.016	0.021	0.024	0.027	0.029	0.031	0.032	0.032	0.032	0.031	0.029	0.027	0.024	0.021	0.016	0.012	0.006	0
REQUIRED CAMBER	0	7	15	23	32	39	46	51	56	58	59	58	56	51	45	39	31	23	15	7	0

SPAN D

TWENTIETH POINTS	BRG.	.05	.10	.15	.20	.25	.30	.35	.40	.45	.50	.55	.60	.65	.70	.75	.80	.85	.90	.95	BRG.
DEFLECTION DUE TO GIRDER	0	0	0	-0.001	-0.001	-0.002	-0.002	-0.003	-0.003	-0.004	-0.004	-0.004	-0.004	-0.004	-0.004	-0.004	-0.003	-0.002	-0.002	-0.001	0
DEFLECTION DUE TO SLAB ✳	0	0	-0.002	-0.003	-0.005	-0.006	-0.008	-0.010	-0.013	-0.014	-0.015	-0.016	-0.016	-0.016	-0.015	-0.013	-0.011	-0.009	-0.005	-0.003	0
DEFLECTION DUE TO RAIL	0	0	0	0	0	-0.001	-0.001	-0.001	-0.001	-0.001	-0.001	-0.001	-0.001	-0.001	-0.001	-0.001	-0.001	-0.001	-0.001	0	0
TOTAL DEAD LOAD DEFLECTION	0	0	-0.002	-0.004	-0.006	-0.009	-0.011	-0.014	-0.017	-0.019	-0.020	-0.021	-0.021	-0.021	-0.020	-0.018	-0.015	-0.012	-0.008	-0.004	0
VERTICAL CURVE ORDINATE	0	0.004	0.007	0.010	0.012	0.014	0.016	0.017	0.018	0.019	0.019	0.019	0.018	0.017	0.016	0.014	0.012	0.010	0.007	0.004	0
REQUIRED CAMBER	0	4	9	14	18	23	27	31	35	38	39	40	39	38	36	32	27	22	15	8	0

DEAD LOAD DEFLECTION TABLE FOR GIRDERS

GIRDER #2

SPAN A

TWENTIETH POINTS	BRG.	.05	.10	.15	.20	.25	.30	.35	.40	.45	.50	.55	.60	.65	.70	.75	.80	.85	.90	.95	BRG.
DEFLECTION DUE TO GIRDER	0	0	-0.001	-0.001	-0.001	-0.001	-0.001	-0.002	-0.002	-0.001	-0.001	-0.001	-0.001	-0.001	-0.001	0	0	0	0	0	0
DEFLECTION DUE TO SLAB ✳	0	-0.002	-0.002	-0.004	-0.005	-0.006	-0.006	-0.005	-0.005	-0.006	-0.005	-0.005	-0.004	-0.002	-0.001	-0.001	-0.001	0	0.001	0.001	0
DEFLECTION DUE TO RAIL	0	0	0	0	0	0	0	0	0	0	0	0	0	0	0	0	0	0	0	0	0
TOTAL DEAD LOAD DEFLECTION	0	-0.002	-0.003	-0.005	-0.006	-0.007	-0.007	-0.007	-0.007	-0.007	-0.006	-0.006	-0.005	-0.003	-0.002	-0.001	-0.001	0	0.001	0.001	0
VERTICAL CURVE ORDINATE	0	0.002	0.005	0.007	0.008	0.010	0.011	0.012	0.012	0.013	0.013	0.013	0.012	0.012	0.011	0.010	0.008	0.007	0.005	0.002	0
REQUIRED CAMBER	0	4	8	12	14	17	18	19	19	20	19	19	17	15	13	11	9	7	4	1	0

SPAN B

TWENTIETH POINTS	BRG.	.05	.10	.15	.20	.25	.30	.35	.40	.45	.50	.55	.60	.65	.70	.75	.80	.85	.90	.95	BRG.
DEFLECTION DUE TO GIRDER	0	0	-0.001	-0.002	-0.003	-0.003	-0.004	-0.005	-0.005	-0.006	-0.006	-0.005	-0.005	-0.004	-0.004	-0.003	-0.002	-0.001	-0.001	0	0
DEFLECTION DUE TO SLAB ✳	0	-0.002	-0.004	-0.006	-0.009	-0.013	-0.016	-0.017	-0.020	-0.020	-0.020	-0.020	-0.018	-0.017	-0.014	-0.011	-0.008	-0.006	-0.003	-0.001	0
DEFLECTION DUE TO RAIL	0	0	0	-0.001	-0.001	-0.001	-0.001	-0.002	-0.002	-0.002	-0.002	-0.002	-0.002	-0.002	-0.001	-0.001	-0.001	0	0	0	0
TOTAL DEAD LOAD DEFLECTION	0	-0.002	-0.005	-0.009	-0.013	-0.017	-0.021	-0.024	-0.027	-0.028	-0.028	-0.027	-0.025	-0.023	-0.019	-0.015	-0.011	-0.007	-0.004	-0.001	0
VERTICAL CURVE ORDINATE	0	0.005	0.010	0.015	0.018	0.021	0.024	0.026	0.027	0.028	0.029	0.028	0.027	0.026	0.024	0.021	0.018	0.015	0.010	0.005	0
REQUIRED CAMBER	0	7	15	24	31	38	45	50	54	56	57	55	52	49	43	36	29	22	14	6	0

SPAN C

TWENTIETH POINTS	BRG.	.05	.10	.15	.20	.25	.30	.35	.40	.45	.50	.55	.60	.65	.70	.75	.80	.85	.90	.95	BRG.
DEFLECTION DUE TO GIRDER	0	0	-0.001	-0.001	-0.002	-0.003	-0.004	-0.004	-0.005	-0.005	-0.005	-0.005	-0.004	-0.004	-0.003	-0.002	-0.002	-0.001	0	0	0
DEFLECTION DUE TO SLAB ✳	0	-0.001	-0.002	-0.005	-0.007	-0.009	-0.012	-0.015	-0.016	-0.017	-0.018	-0.017	-0.016	-0.014	-0.012	-0.009	-0.005	-0.003	-0.002	0	0
DEFLECTION DUE TO RAIL	0	0	0	0	-0.001	-0.001	-0.001	-0.001	-0.002	-0.002	-0.002	-0.002	-0.002	-0.001	-0.001	-0.001	-0.001	0	0	0	0
TOTAL DEAD LOAD DEFLECTION	0	-0.001	-0.003	-0.006	-0.010	-0.013	-0.017	-0.020	-0.023	-0.024	-0.025	-0.024	-0.022	-0.019	-0.016	-0.012	-0.008	-0.004	-0.002	0	0
VERTICAL CURVE ORDINATE	0	0.006	0.011	0.016	0.020	0.023	0.026	0.028	0.030	0.031	0.031	0.031	0.030	0.028	0.026	0.023	0.020	0.016	0.011	0.006	0
REQUIRED CAMBER	0	7	14	22	30	36	43	48	53	55	56	55	52	47	42	35	28	20	13	6	0

SPAN D

TWENTIETH POINTS	BRG.	.05	.10	.15	.20	.25	.30	.35	.40	.45	.50	.55	.60	.65	.70	.75	.80	.85	.90	.95	BRG.
DEFLECTION DUE TO GIRDER	0	0	-0.001	-0.002	-0.002	-0.003	-0.004	-0.005	-0.006	-0.006	-0.007	-0.007	-0.007	-0.007	-0.006	-0.006	-0.005	-0.004	-0.003	-0.001	0
DEFLECTION DUE TO SLAB ✳	0	-0.002	-0.003	-0.005	-0.009	-0.012	-0.015	-0.018	-0.019	-0.022	-0.024	-0.025	-0.025	-0.024	-0.023	-0.020	-0.018	-0.014	-0.009	-0.006	0
DEFLECTION DUE TO RAIL	0	0	0	-0.001	-0.001	-0.001	-0.001	-0.001	-0.002	-0.002	-0.002	-0.002	-0.002	-0.002	-0.002	-0.002	-0.001	-0.001	-0.001	0	0
TOTAL DEAD LOAD DEFLECTION	0	-0.002	-0.004	-0.008	-0.012	-0.016	-0.020	-0.024	-0.027	-0.030	-0.033	-0.034	-0.034	-0.033	-0.031	-0.028	-0.024	-0.019	-0.013	-0.007	0
VERTICAL CURVE ORDINATE	0	0.004	0.008	0.011	0.013	0.016	0.018	0.019	0.020	0.021	0.021	0.021	0.020	0.019	0.018	0.016	0.013	0.011	0.008	0.004	0
REQUIRED CAMBER	0	6	12	19	25	32	38	43	47	51	54	55	54	52	49	44	37	30	21	11	0

✳ INCLUDES SLAB, BUILDUPS & STAY-IN-PLACE FORMS.

ALL VALUES ARE SHOWN IN METERS, EXCEPT "FINAL CAMBER" WHICH IS SHOWN IN MILLIMETERS.

THERE IS NO CAMBER DISSIPATION DUE TO HEAT CURVING.

PROJECT NO. R-0609IA

GUILFORD COUNTY

STATION: 19+26.763 -FLY-

SHEET 1 OF 4

STATE OF NORTH CAROLINA
DEPARTMENT OF TRANSPORTATION
RALEIGH

SUPERSTRUCTURE
DEAD LOAD
DEFLECTIONS

NORTH CAROLINA PROFESSIONAL SEAL 23926 ENGINEER BRIAN C. HAWKINS
5/22/06

REVISIONS							SHEET NO.
NO.	BY:	DATE:	NO.	BY:	DATE:		S-293
1			3				TOTAL SHEETS
2			4				321

DRAWN BY : William T. Parker DATE : 06/01/05
CHECKED BY : K.W.ALFORD DATE : 6/22/05

15-MAY-2006 11:41
J:\STRUCT~1\frye\FINAL_~1\Str9\r0609a_sd_09_dld.dgn
rwwright

STR. #9

DEAD LOAD DEFLECTION TABLE FOR GIRDERS

GIRDER #3

SPAN A

TWENTIETH POINTS	BRG.	.05	.10	.15	.20	.25	.30	.35	.40	.45	.50	.55	.60	.65	.70	.75	.80	.85	.90	.95	BRG.
DEFLECTION DUE TO GIRDER	0	0	-0.001	-0.001	-0.001	-0.001	-0.001	-0.001	-0.001	-0.001	-0.001	-0.001	-0.001	-0.001	0	0	0	0	0	0	0
DEFLECTION DUE TO SLAB ✳	0	-0.002	-0.002	-0.004	-0.005	-0.006	-0.006	-0.006	-0.006	-0.006	-0.005	-0.004	-0.003	-0.002	-0.002	-0.001	0	0	0.001	0.001	0
DEFLECTION DUE TO RAIL	0	0	0	0	0	0	0	0	0	0	0	0	0	0	0	0	0	0	0	0	0
TOTAL DEAD LOAD DEFLECTION	0	-0.002	-0.003	-0.005	-0.006	-0.007	-0.007	-0.007	-0.007	-0.007	-0.006	-0.005	-0.004	-0.003	-0.002	-0.001	0	0	0.001	0.001	0
VERTICAL CURVE ORDINATE	0	0.002	0.005	0.006	0.008	0.009	0.011	0.011	0.012	0.012	0.013	0.012	0.012	0.011	0.011	0.009	0.008	0.006	0.005	0.002	0
REQUIRED CAMBER	0	4	8	11	14	16	18	18	19	19	19	17	16	14	13	10	8	6	4	1	0

SPAN B

TWENTIETH POINTS	BRG.	.05	.10	.15	.20	.25	.30	.35	.40	.45	.50	.55	.60	.65	.70	.75	.80	.85	.90	.95	BRG.
DEFLECTION DUE TO GIRDER	0	-0.001	-0.001	-0.002	-0.003	-0.004	-0.004	-0.005	-0.006	-0.006	-0.006	-0.006	-0.005	-0.005	-0.004	-0.003	-0.002	-0.001	-0.001	0	0
DEFLECTION DUE TO SLAB ✳	0	-0.001	-0.005	-0.007	-0.010	-0.013	-0.017	-0.019	-0.021	-0.022	-0.022	-0.021	-0.020	-0.017	-0.016	-0.012	-0.009	-0.006	-0.003	-0.002	0
DEFLECTION DUE TO RAIL	0	0	0	-0.001	-0.001	-0.001	-0.002	-0.002	-0.002	-0.002	-0.002	-0.002	-0.002	-0.002	-0.001	-0.001	-0.001	-0.001	0	0	0
TOTAL DEAD LOAD DEFLECTION	0	-0.002	-0.006	-0.010	-0.014	-0.018	-0.023	-0.026	-0.029	-0.030	-0.030	-0.029	-0.027	-0.024	-0.021	-0.016	-0.012	-0.008	-0.004	-0.002	0
VERTICAL CURVE ORDINATE	0	0.005	0.010	0.014	0.018	0.021	0.023	0.025	0.027	0.028	0.028	0.028	0.027	0.025	0.023	0.021	0.018	0.014	0.010	0.005	0
REQUIRED CAMBER	0	7	16	24	32	39	46	51	56	58	58	57	54	49	44	37	30	22	14	7	0

SPAN C

TWENTIETH POINTS	BRG.	.05	.10	.15	.20	.25	.30	.35	.40	.45	.50	.55	.60	.65	.70	.75	.80	.85	.90	.95	BRG.
DEFLECTION DUE TO GIRDER	0	0	-0.001	-0.001	-0.002	-0.003	-0.003	-0.004	-0.004	-0.004	-0.004	-0.004	-0.004	-0.003	-0.002	-0.002	-0.001	0	0	0	0
DEFLECTION DUE TO SLAB ✳	0	0	-0.001	-0.004	-0.006	-0.008	-0.012	-0.014	-0.016	-0.016	-0.016	-0.016	-0.014	-0.013	-0.010	-0.006	-0.005	-0.002	0	0.001	0
DEFLECTION DUE TO RAIL	0	0	0	0	-0.001	-0.001	-0.001	-0.001	-0.001	-0.002	-0.002	-0.001	-0.001	-0.001	-0.001	-0.001	0	0	0	0	0
TOTAL DEAD LOAD DEFLECTION	0	0	-0.002	-0.005	-0.009	-0.012	-0.016	-0.019	-0.021	-0.022	-0.022	-0.021	-0.019	-0.017	-0.013	-0.009	-0.006	-0.002	0	0.001	0
VERTICAL CURVE ORDINATE	0	0.006	0.011	0.015	0.019	0.023	0.025	0.028	0.029	0.030	0.030	0.030	0.029	0.028	0.025	0.023	0.019	0.015	0.011	0.006	0
REQUIRED CAMBER	0	6	13	20	28	35	41	47	50	52	52	51	48	45	38	32	25	17	11	5	0

SPAN D

TWENTIETH POINTS	BRG.	.05	.10	.15	.20	.25	.30	.35	.40	.45	.50	.55	.60	.65	.70	.75	.80	.85	.90	.95	BRG.
DEFLECTION DUE TO GIRDER	0	-0.001	-0.001	-0.002	-0.004	-0.005	-0.006	-0.007	-0.008	-0.009	-0.009	-0.010	-0.010	-0.009	-0.009	-0.008	-0.007	-0.005	-0.004	-0.002	0
DEFLECTION DUE TO SLAB ✳	0	-0.002	-0.005	-0.008	-0.012	-0.016	-0.020	-0.024	-0.028	-0.030	-0.033	-0.033	-0.033	-0.033	-0.030	-0.028	-0.023	-0.018	-0.012	-0.006	0
DEFLECTION DUE TO RAIL	0	0	0	-0.001	-0.001	-0.001	-0.002	-0.002	-0.002	-0.003	-0.003	-0.003	-0.003	-0.003	-0.003	-0.002	-0.002	-0.002	-0.001	-0.001	0
TOTAL DEAD LOAD DEFLECTION	0	-0.003	-0.006	-0.011	-0.017	-0.022	-0.028	-0.033	-0.038	-0.042	-0.045	-0.046	-0.046	-0.045	-0.042	-0.038	-0.032	-0.025	-0.017	-0.009	0
VERTICAL CURVE ORDINATE	0	0.004	0.008	0.012	0.015	0.017	0.019	0.021	0.022	0.023	0.023	0.023	0.022	0.021	0.019	0.017	0.015	0.012	0.008	0.004	0
REQUIRED CAMBER	0	7	14	23	32	39	47	54	60	65	68	69	68	66	61	55	47	37	25	13	0

DEAD LOAD DEFLECTION TABLE FOR GIRDERS

GIRDER #4

SPAN A

TWENTIETH POINTS	BRG.	.05	.10	.15	.20	.25	.30	.35	.40	.45	.50	.55	.60	.65	.70	.75	.80	.85	.90	.95	BRG.
DEFLECTION DUE TO GIRDER	0	0	-0.001	-0.001	-0.001	-0.001	-0.001	-0.001	-0.001	-0.001	-0.001	-0.001	-0.001	-0.001	0	0	0	0	0	0	0
DEFLECTION DUE TO SLAB ✳	0	-0.002	-0.002	-0.003	-0.005	-0.005	-0.006	-0.006	-0.006	-0.005	-0.005	-0.004	-0.003	-0.002	-0.002	-0.001	0	0.001	0.001	0.001	0
DEFLECTION DUE TO RAIL	0	0	0	0	0	0	0	0	0	0	0	0	0	0	0	0	0	0	0	0	0
TOTAL DEAD LOAD DEFLECTION	0	-0.002	-0.003	-0.004	-0.006	-0.006	-0.007	-0.007	-0.007	-0.006	-0.006	-0.005	-0.004	-0.003	-0.002	-0.001	0	0.001	0.001	0.001	0
VERTICAL CURVE ORDINATE	0	0.002	0.004	0.006	0.008	0.009	0.010	0.011	0.012	0.012	0.012	0.012	0.012	0.011	0.010	0.009	0.008	0.006	0.004	0.002	0
REQUIRED CAMBER	0	4	7	10	14	15	17	18	19	18	18	17	16	14	12	10	8	5	3	1	0

SPAN B

TWENTIETH POINTS	BRG.	.05	.10	.15	.20	.25	.30	.35	.40	.45	.50	.55	.60	.65	.70	.75	.80	.85	.90	.95	BRG.
DEFLECTION DUE TO GIRDER	0	-0.001	-0.001	-0.002	-0.003	-0.004	-0.005	-0.005	-0.006	-0.006	-0.006	-0.006	-0.006	-0.005	-0.004	-0.003	-0.002	-0.002	-0.001	0	0
DEFLECTION DUE TO SLAB ✳	0	-0.002	-0.005	-0.007	-0.011	-0.014	-0.017	-0.020	-0.022	-0.024	-0.024	-0.023	-0.021	-0.019	-0.017	-0.013	-0.010	-0.005	-0.004	-0.002	0
DEFLECTION DUE TO RAIL	0	0	0	-0.001	-0.001	-0.001	-0.002	-0.002	-0.002	-0.002	-0.002	-0.002	-0.002	-0.002	-0.001	-0.001	-0.001	-0.001	0	0	0
TOTAL DEAD LOAD DEFLECTION	0	-0.003	-0.006	-0.010	-0.015	-0.019	-0.024	-0.027	-0.030	-0.032	-0.032	-0.031	-0.029	-0.026	-0.022	-0.017	-0.013	-0.008	-0.005	-0.002	0
VERTICAL CURVE ORDINATE	0	0.005	0.010	0.014	0.017	0.020	0.023	0.025	0.026	0.027	0.027	0.027	0.026	0.025	0.023	0.020	0.017	0.014	0.010	0.005	0
REQUIRED CAMBER	0	8	16	24	32	39	47	52	56	59	59	58	55	51	45	37	30	22	15	7	0

SPAN C

TWENTIETH POINTS	BRG.	.05	.10	.15	.20	.25	.30	.35	.40	.45	.50	.55	.60	.65	.70	.75	.80	.85	.90	.95	BRG.
DEFLECTION DUE TO GIRDER	0	0	-0.001	-0.001	-0.002	-0.002	-0.003	-0.003	-0.004	-0.004	-0.004	-0.004	-0.003	-0.002	-0.002	-0.001	0	0	0.001	0	0
DEFLECTION DUE TO SLAB ✳	0	0	-0.001	-0.003	-0.004	-0.008	-0.010	-0.013	-0.014	-0.015	-0.015	-0.014	-0.013	-0.011	-0.007	-0.004	-0.003	0	0.001	0.002	0
DEFLECTION DUE TO RAIL	0	0	0	0	-0.001	-0.001	-0.001	-0.001	-0.001	-0.001	-0.001	-0.001	-0.001	-0.001	-0.001	-0.001	0	0	0	0	0
TOTAL DEAD LOAD DEFLECTION	0	0	-0.002	-0.004	-0.007	-0.011	-0.014	-0.017	-0.019	-0.020	-0.020	-0.019	-0.017	-0.014	-0.010	-0.006	-0.003	0	0.002	0.002	0
VERTICAL CURVE ORDINATE	0	0.006	0.011	0.015	0.019	0.022	0.025	0.027	0.028	0.029	0.029	0.029	0.028	0.027	0.025	0.022	0.019	0.015	0.011	0.006	0
REQUIRED CAMBER	0	6	13	19	26	33	39	44	47	49	49	48	45	41	35	28	22	15	9	4	0

SPAN D

TWENTIETH POINTS	BRG.	.05	.10	.15	.20	.25	.30	.35	.40	.45	.50	.55	.60	.65	.70	.75	.80	.85	.90	.95	BRG.
DEFLECTION DUE TO GIRDER	0	-0.001	-0.002	-0.003	-0.005	-0.006	-0.008	-0.009	-0.010	-0.011	-0.012	-0.012	-0.012	-0.012	-0.011	-0.010	-0.008	-0.007	-0.005	-0.002	0
DEFLECTION DUE TO SLAB ✳	0	-0.003	-0.005	-0.010	-0.015	-0.020	-0.025	-0.030	-0.035	-0.039	-0.041	-0.043	-0.043	-0.041	-0.040	-0.035	-0.030	-0.023	-0.016	-0.008	0
DEFLECTION DUE TO RAIL	0	0	-0.001	-0.001	-0.001	-0.002	-0.002	-0.003	-0.003	-0.003	-0.004	-0.004	-0.004	-0.004	-0.003	-0.003	-0.003	-0.002	-0.001	-0.001	0
TOTAL DEAD LOAD DEFLECTION	0	-0.004	-0.008	-0.014	-0.021	-0.028	-0.035	-0.042	-0.048	-0.053	-0.057	-0.059	-0.059	-0.057	-0.054	-0.048	-0.041	-0.032	-0.022	-0.011	0
VERTICAL CURVE ORDINATE	0	0.005	0.009	0.013	0.016	0.019	0.021	0.022	0.024	0.024	0.025	0.024	0.024	0.022	0.021	0.019	0.016	0.013	0.009	0.005	0
REQUIRED CAMBER	0	9	17	27	37	47	56	64	72	77	82	83	83	79	75	67	57	45	31	16	0

PROJECT NO. R-0609IA

GUILFORD COUNTY

STATION: 19+26.763 -FLY-

SHEET 2 OF 4

STATE OF NORTH CAROLINA
DEPARTMENT OF TRANSPORTATION
RALEIGH

SUPERSTRUCTURE
DEAD LOAD DEFLECTIONS

NORTH CAROLINA PROFESSIONAL SEAL 23926 ENGINEER BRIAN C. HAWKS
5/22/06

REVISIONS								SHEET NO.
NO.	BY:	DATE:	NO.	BY:	DATE:			S-294
1			3					TOTAL SHEETS
2			4					321

DRAWN BY : William T. Parker DATE : 06/01/05
CHECKED BY : K.W.ALFORD DATE : 6/22/05

15-MAY-2006 11:41
J:\STRUCT~1\frye\FINAL_~1\Str9\r0609a_sd_09_dld.dgn
rwwright

STR. #9

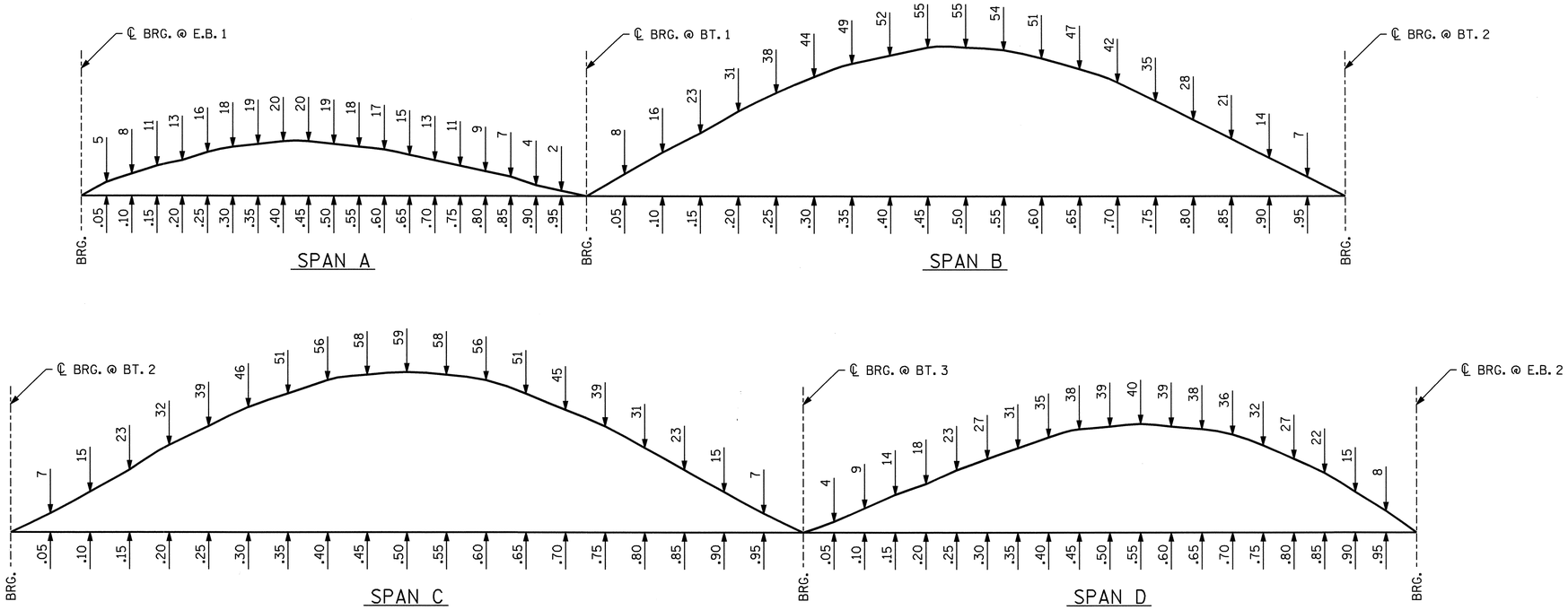

SCHEMATIC CAMBER ORDINATES - GIRDER #1

SLOPE FOR THE ZERO CAMBER BASELINE VARIES

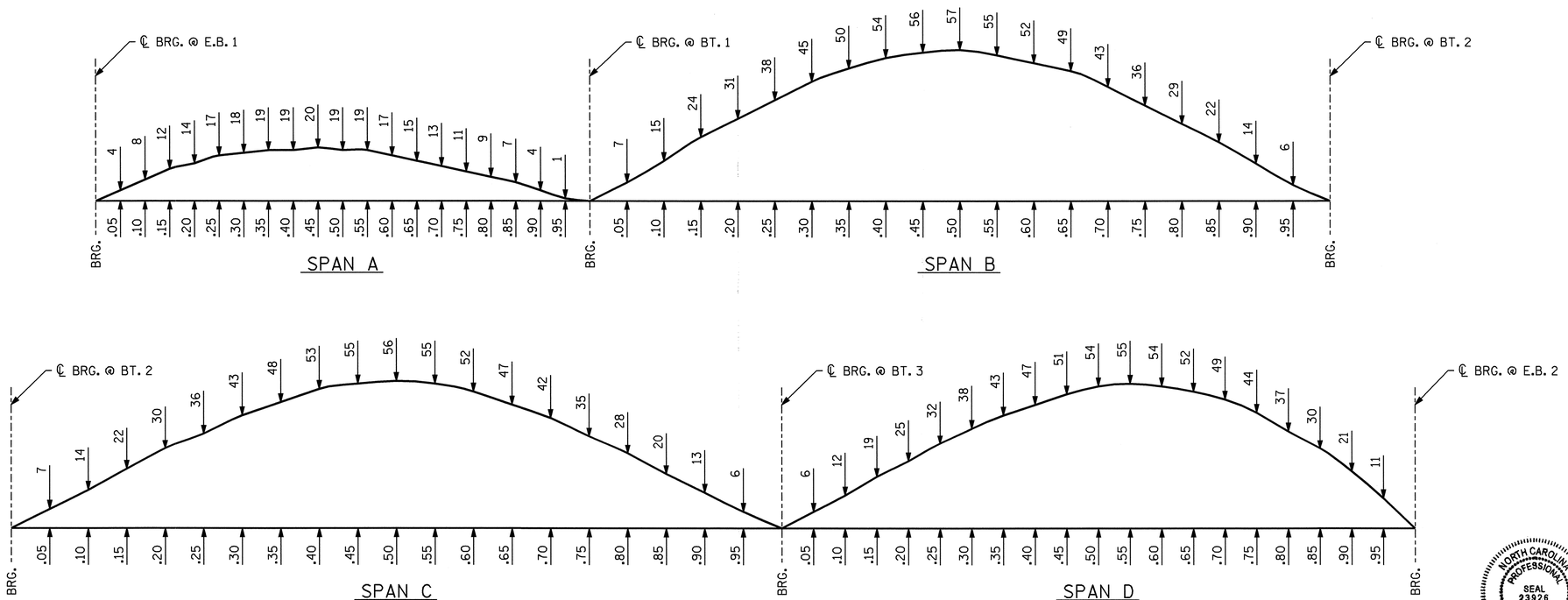

SCHEMATIC CAMBER ORDINATES - GIRDER #2

SLOPE FOR THE ZERO CAMBER BASELINE VARIES

PROJECT NO. R-0609IA
GUILFORD COUNTY
STATION: 19+26.763 -FLY-

SHEET 3 OF 4

STATE OF NORTH CAROLINA
DEPARTMENT OF TRANSPORTATION
RALEIGH

SUPERSTRUCTURE
DEAD LOAD
DEFLECTIONS
(SCHEMATIC CAMBER ORDINATES)

NORTH CAROLINA PROFESSIONAL SEAL 23926 ENGINEER BRIAN C. HANKS
5/22/06

REVISIONS						SHEET NO.
NO.	BY:	DATE:	NO.	BY:	DATE:	S-295
1			3			TOTAL SHEETS
2			4			321

DRAWN BY : William T. Parker DATE : 06/01/05
CHECKED BY : K.W.ALFORD DATE : 6/22/05

15-MAY-2006 11:41
J:\STRUCT~1\frye\FINAL_~1\Str9\r0609a_sd_09_dld.dgn
rwwright

STR. #9

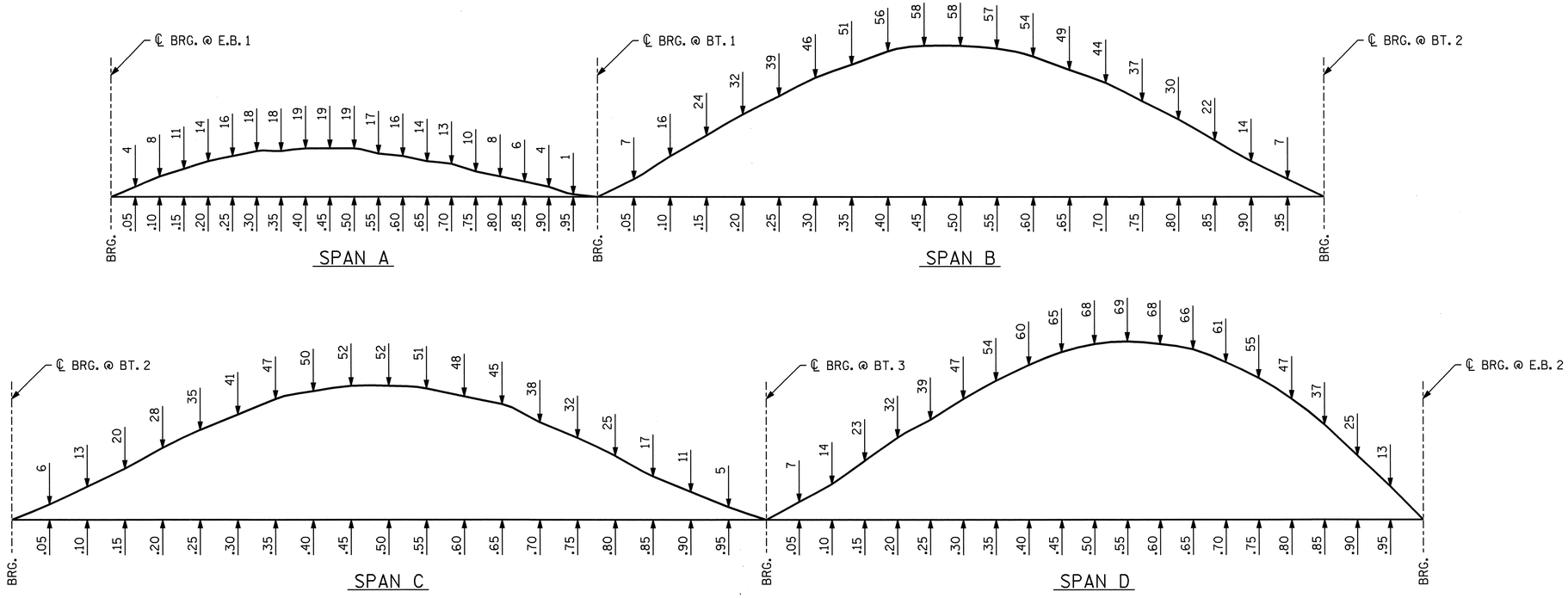

SCHEMATIC CAMBER ORDINATES - GIRDER #3

SLOPE FOR THE ZERO CAMBER BASELINE VARIES

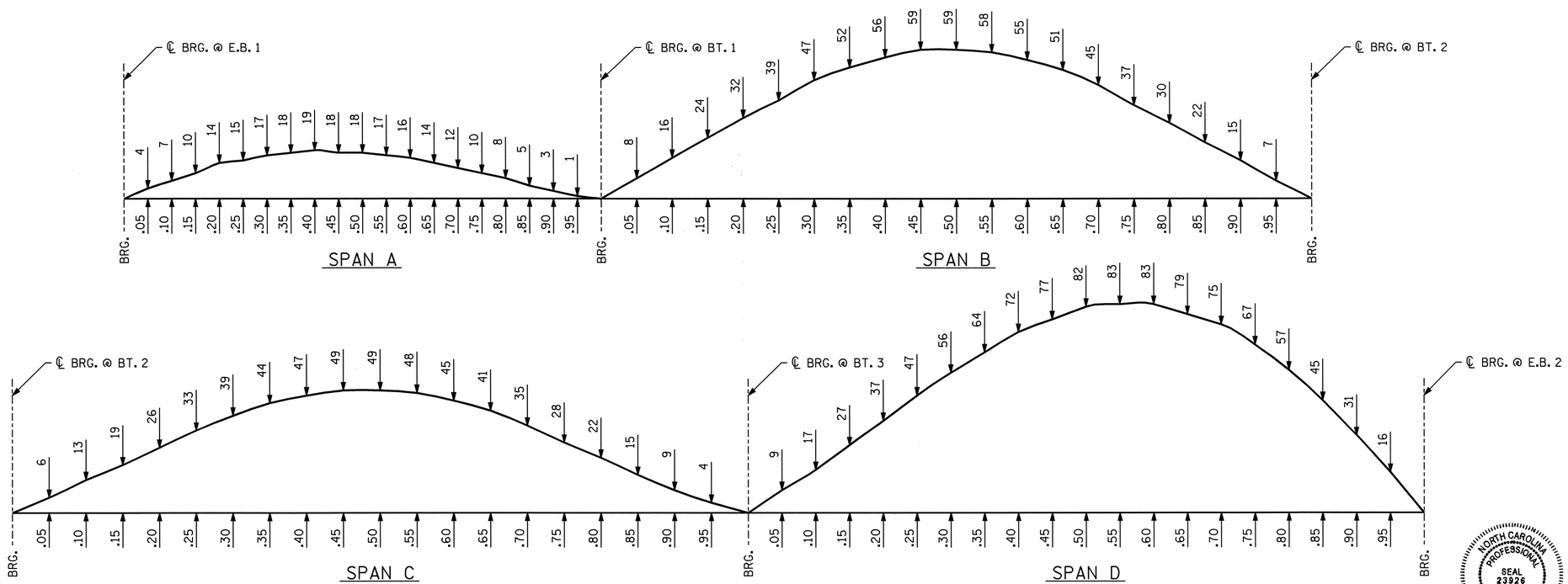

SCHEMATIC CAMBER ORDINATES - GIRDER #4

SLOPE FOR THE ZERO CAMBER BASELINE VARIES

PROJECT NO. R-0609IA
GUILFORD COUNTY
STATION: 19+26.763 -FLY-

SHEET 4 OF 4

STATE OF NORTH CAROLINA
DEPARTMENT OF TRANSPORTATION
RALEIGH

SUPERSTRUCTURE
DEAD LOAD
DEFLECTIONS
(SCHEMATIC CAMBER ORDINATES)

NORTH CAROLINA PROFESSIONAL SEAL 23926 ENGINEER BRIAN C. HANKS
5/22/06

REVISIONS							SHEET NO.
NO.	BY:	DATE:	NO.	BY:	DATE:		S-296
1			3				TOTAL SHEETS
2			4				321

DRAWN BY : William T. Parker DATE : 06/01/05
CHECKED BY : K.W.ALFORD DATE : 6/22/05

15-MAY-2006 11:41
J:\STRUCT~1\frye\FINAL_~1\Str9\r0609a_sd_09_dld.dgn
rwwright

STR. #9

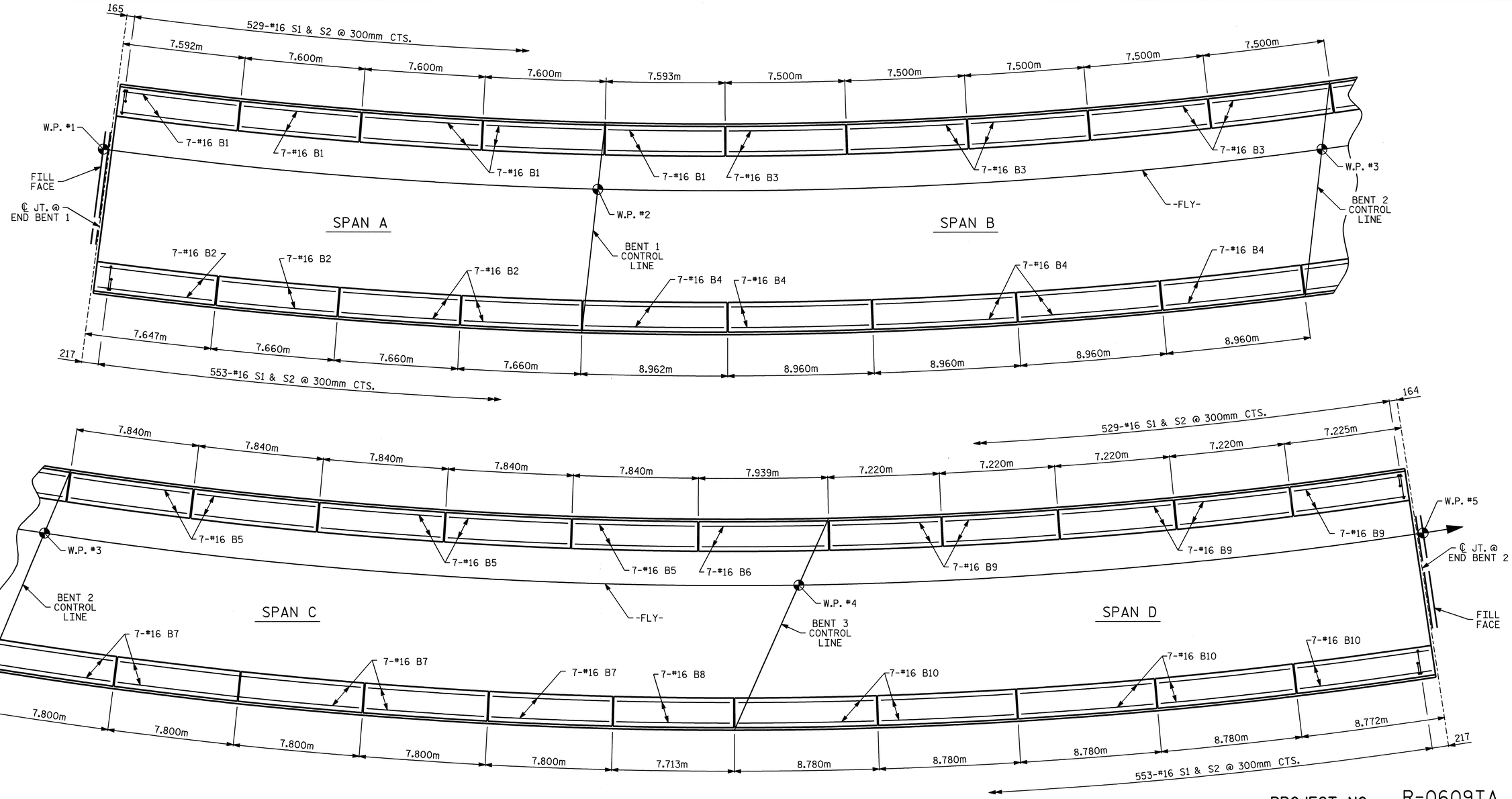

PLAN OF BARRIER RAIL

PROJECT NO. R-0609IA

GUILFORD COUNTY

STATION: 19+26.763 -FLY-

SHEET 1 OF 2

STATE OF NORTH CAROLINA
DEPARTMENT OF TRANSPORTATION
RALEIGH

SUPERSTRUCTURE
CONCRETE
BARRIER
RAIL

NORTH CAROLINA PROFESSIONAL SEAL 23926 ENGINEER BRIAN C. HANKS
5/22/06

REVISIONS								SHEET NO.
NO.	BY:	DATE:	NO.	BY:	DATE:			S-297
1			3					TOTAL SHEETS
2			4					321

DRAWN BY : William T. Parker DATE : 06/01/05
CHECKED BY : K.W.ALFORD DATE : 6/24/05

15-MAY-2006 11:40
J:\STRUCT~1\frye\FINAL_~1\Str9\r0609a_sd_09_br.dgn
rwwright

STR. #9

NOTES

THE BARRIER RAIL IN EACH SPAN SHALL NOT BE CAST UNTIL ALL SLAB CONCRETE IN THAT SPAN HAS BEEN CAST AND HAS REACHED A MINIMUM COMPRESSIVE STRENGTH OF 20.7 MPa.

ALL REINFORCING STEEL IN BARRIER RAILS SHALL BE EPOXY COATED.

VERTICAL GROOVED CONTRACTION JOINTS, 12mm IN DEPTH, SHALL BE TOOLED IN ALL EXPOSED FACES OF THE BARRIER RAIL AND IN ACCORDANCE WITH ARTICLE 825-10(B) OF THE STANDARD SPECIFICATIONS. THE CONTRACTION JOINT SHALL BE LOCATED AT EACH THIRD POINT BETWEEN BARRIER RAIL EXPANSION JOINTS. ONLY ONE CONTRACTION JOINT IS REQUIRED AT MIDPOINT OF BARRIER RAIL SEGMENTS LESS THAN 6.1m IN LENGTH AND NO CONTRACTION JOINTS ARE REQUIRED FOR THOSE SEGMENTS LESS THAN 3.5m IN LENGTH.

THE #16 S1 & S2 BARS MAY BE SHIFTED SLIGHTLY IN ORDER TO MAINTAIN A 50mm MINIMUM CLEARANCE TO THE 13mm EXPANSION JOINT IN THE RAIL.

BAR TYPES

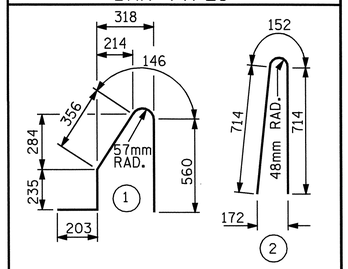

ALL BAR DIMENSIONS ARE OUT TO OUT

BILL OF MATERIAL

FOR CONCRETE BARRIER RAIL ONLY

BAR	NO.	SIZE	TYPE	LENGTH	WEIGHT
* B1	35	#16	STR.	7480	406
* B2	28	#16	STR.	7520	327
* B3	35	#16	STR.	7380	401
* B4	35	#16	STR.	8820	479
* B5	35	#16	STR.	7720	419
* B6	7	#16	STR.	7820	85
* B7	35	#16	STR.	7660	416
* B8	7	#16	STR.	7580	82
* B9	35	#16	STR.	7100	386
* B10	35	#16	STR.	8640	469
* S1	1082	#16	1	1500	2519
* S2	1082	#16	2	1580	2653

* EPOXY COATED REINFORCING STEEL 8642 kg

CLASS AA CONCRETE 81.4 CU. METER

CONCRETE BARRIER RAIL 324.2 METERS

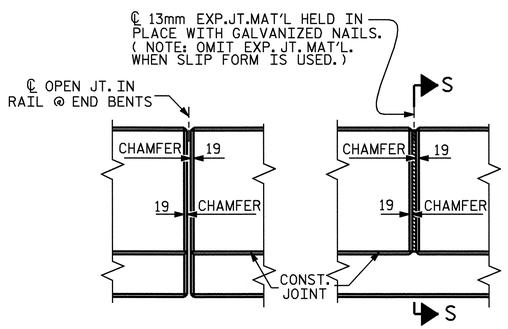

ELEVATION AT EXPANSION JOINTS

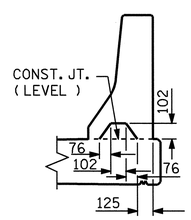

SECTION S-S

AT DAM IN OPEN JOINT
(THIS IS TO BE USED ONLY WHEN SLIP FORM IS USED)

BARRIER RAIL DETAILS

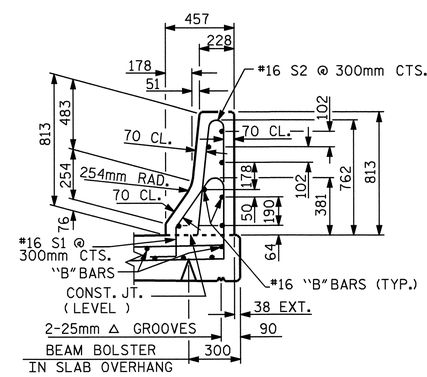

SECTION THRU RAIL

PROJECT NO. R-0609IA
GUILFORD COUNTY
STATION: 19+26.763 -FLY-

SHEET 2 OF 2

STATE OF NORTH CAROLINA
DEPARTMENT OF TRANSPORTATION
RALEIGH

SUPERSTRUCTURE

CONCRETE BARRIER RAIL

NORTH CAROLINA PROFESSIONAL SEAL 23926 ENGINEER BRIAN C. HANKS
5/22/06

REVISIONS							SHEET NO.
NO.	BY:	DATE:	NO.	BY:	DATE:		S-298
1			3				TOTAL SHEETS
2			4				321

ASSEMBLED BY : William T. Parker DATE : 06/01/05
CHECKED BY : K.W.ALFORD DATE : 6/24/05

DRAWN BY : ARB 5/87
CHECKED BY : SJD 9/87

REV. 8/16/99 RWW/LES
REV. 10/17/00 RWW/LES
REV. 5/7/03R RWW/JTE

STR. #9

STD. No. CBR1SM

15-MAY-2006 11:39
J:\STRUCT~1\frye\FINAL_~1\Str9\r0609a_sd_09_br.dgn
rwwright

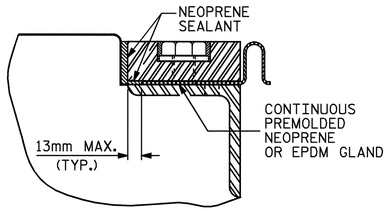

DETAIL "A"

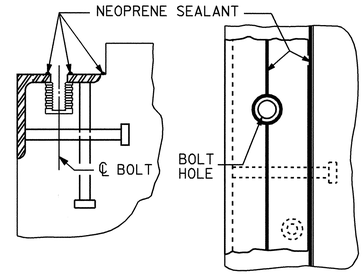

INSTALLATION SKETCH

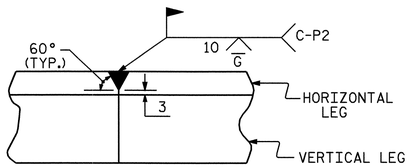

DETAIL- FIELD WELD SPLICE OF BASE ANGLE

INSTALLATION PROCEDURE

1. A TEMPLATE OR OTHER SUITABLE DEVICE SHALL BE USED TO FORM THE TOP OF THE EXPANSION JOINT SEAL BLOCKOUT TO THE PROPER DEPTH AND WIDTH. THE TEMPLATE SHALL BE 105mm TO 108mm WIDE AND OF SUCH THICKNESS AS TO PROVIDE FOR CORRECT FINAL ELEVATION OF TOP OF HOLD-DOWN PLATES. THE TEMPLATE SHALL BE ATTACHED TO THE BASE ANGLE ASSEMBLY WITH THE 19.05mm DIA. HEX HEAD BOLTS PROVIDED FOR THE HOLD-DOWN PLATES. A 25mm DIA. HOLE SHALL BE PROVIDED IN THE TEMPLATE CENTERED OVER EACH WEEPHOLE IN THE 102mm X 102mm X 12.7mm BASE ANGLE. OTHER METHODS OF INSURING DRAINAGE THROUGH WEEP HOLES MAY BE EMPLOYED SUBJECT TO ENGINEER'S APPROVAL.
2. AFTER THE CONCRETE HAS BEEN CAST ON BOTH SIDES OF THE JOINT, REMOVE THE TEMPLATE. THOROUGHLY CLEAN THE BOLT HOLES AND THE ANGLE PLATE. REMOVE ANY EXCESS CONCRETE THAT COMES OUT OF THE WEEP HOLES. ANY DAMAGED STEEL SHALL BE COATED WITH A MINIMUM THICKNESS OF 0.100mm (DRY) OF ZINC-RICH PAINT IN ACCORDANCE WITH THE STANDARD SPECIFICATIONS.
3. LAY THE GLAND ON THE BASE ANGLE AND FIELD MARK THE GLAND FOR THE BOLT HOLES. HOLES IN THE GLAND SHALL BE PUNCHED 22mm IN DIAMETER WITH A HAND PUNCH.
4. IN ORDER TO CHECK FOR PROPER ALIGNMENT, PLACE THE GLAND AND HOLD-DOWN PLATES ON THE BASE ANGLE. DO NOT APPLY NEOPRENE SEALANT. BOLT THE HOLD-DOWN PLATES TO THE BASE ANGLE BUT DO NOT TIGHTEN. THE ENGINEER SHALL INSPECT THE JOINT SEAL DEVICE FOR PROPER ALIGNMENT.
5. AFTER INSPECTION, REMOVE THE HOLD-DOWN PLATES AND GLAND. APPLY NEOPRENE SEALANT TO THE BASE ANGLE IN ACCORDANCE WITH THE "INSTALLATION SKETCH". PLACE GLAND AND HOLD-DOWN PLATES ON THE BASE ANGLE. BOLT THE HOLD-DOWN PLATES TO THE BASE ANGLE ASSEMBLY AND TORQUE THE BOLTS TO 119.3 N-m WITH A TORQUE WRENCH. THE TORQUE WRENCH SHALL BE CALIBRATED IN ACCORDANCE WITH SECTION 440-10 (D) OF THE STANDARD SPECIFICATIONS. CHECK THE TORQUE AFTER THREE (3) HOURS AND, IF NECESSARY, RETIGHTEN TO 119.3 N-m. A FINAL CHECK SHALL BE MADE AT SEVEN (7) DAYS. TORQUE SHALL NOT BE LESS THAN 108.5 N-m AFTER SEVEN (7) DAYS.
6. AFTER PROPER TORQUING, CLEAN THE BOLT HOLE RECESSES AND THE RECESS BETWEEN THE JOINT SEAL DEVICE AND CONCRETE. COMPLETELY FILL THESE RECESSES WITH NEOPRENE SEALANT.

GENERAL NOTES

1. FOR EXPANSION JOINT SEALS, SEE SPECIAL PROVISIONS.
2. ALL PLATES AND ANGLES SHALL CONFORM TO AASHTO M270 GRADE 250 STEEL OR APPROVED EQUAL. ALL HOLD-DOWN BOLTS SHALL CONFORM TO ASTM F593 ALLOY 304 STAINLESS STEEL. WASHERS SHALL CONFORM TO ASTM F844 EXCEPT THEY SHALL BE MADE FROM ALLOY 304 STAINLESS STEEL. ALL STUD ANCHORS SHALL CONFORM TO AASHTO M169, GRADES 1010 THRU 1020 OR APPROVED EQUAL. ALL CONCRETE INSERTS SHALL BE CLOSED END AND SHALL CONFORM TO AASHTO M169, GRADE 12L14. TENSILE CAPACITY SHALL BE 13.3 kN MIN.
3. A PREMOLDED CORRUGATED OR NON-CORRUGATED GLAND SHALL BE USED FOR JOINTS SKEWED BETWEEN 50° THRU 130° . FOR JOINTS SKEWED LESS THAN 50° OR MORE THAN 130° , ONLY A CORRUGATED GLAND SHALL BE USED.
4. CLOSED END FERRULES AND STUD ANCHORS SHALL BE SHOP WELDED AND ALL HOLES SHALL BE SHOP DRILLED AS SHOWN ON PLANS. STUD ANCHORS SHALL BE ELECTRIC ARC END WELDED WITH COMPLETE FUSION.
5. SURFACES COMING IN CONTACT WITH NEOPRENE SHALL BE GROUND SMOOTH PRIOR TO METALLIZING.
6. UPON COMPLETION OF SHOP FABRICATION, THE HOLD DOWN PLATE AND BASE ANGLE ASSEMBLY AS SHOWN IN THE "TYPICAL SECTION OF BASE ANGLE ASSEMBLY", SHALL BE METALLIZED. SEE SPECIAL PROVISION FOR THERMAL SPRAYED COATINGS (METALLIZATION).
7. BASE ANGLE ASSEMBLY SHALL BE CONTINUOUS FOR THE LENGTH OF THE JOINT. AT CROWN BREAKS, THE ENDS OF THE BASE ANGLE ASSEMBLY SHALL BE CUT PARALLEL TO THE BRIDGE CENTERLINE FOR SKEWS LESS THAN 80° AND GREATER THAN 100°. FINISHED WELD SHALL BE GROUND SMOOTH AND COATED WITH A MINIMUM THICKNESS OF 0.100mm (DRY) OF ZINC-RICH PAINT IN ACCORDANCE WITH THE STANDARD SPECIFICATIONS.
8. FIELD SPLICES OF HOLD-DOWN PLATES SHALL BE KEPT TO A MINIMUM. CONTRACTOR SHALL FURNISH DETAILED PLANS SHOWING PROPOSED SPLICE LOCATIONS FOR APPROVAL. HOLD-DOWN PLATES SHALL NOT EXCEED 6.1m LENGTHS UNLESS APPROVED BY THE ENGINEER.
9. NO ALTERNATE JOINT DETAILS SHALL BE PERMITTED IN LIEU OF THOSE SHOWN ON THESE PLANS.
10. THE CONTRACTOR MAY, AT HIS OPTION, USE ADHESIVELY ANCHORED ANCHOR BOLTS IN PLACE OF CONCRETE INSERTS FOR COVER PLATES. SEE SPECIAL PROVISION FOR ADHESIVELY ANCHORED ANCHOR BOLT OR DOWELS. THE YIELD LOAD OF THE 19.05mm DIA. BOLT IS 44.5 kN. FIELD TESTING OF THE ADHESIVE BONDING SYSTEM IS NOT REQUIRED.
11. NO SEPARATE PAYMENT WILL BE MADE FOR FURNISHING AND INSTALLING THE COVER PLATE. THE ENTIRE COST OF THIS WORK SHALL BE INCLUDED IN THE LUMP SUM PRICE FOR "EXPANSION JOINT SEAL".

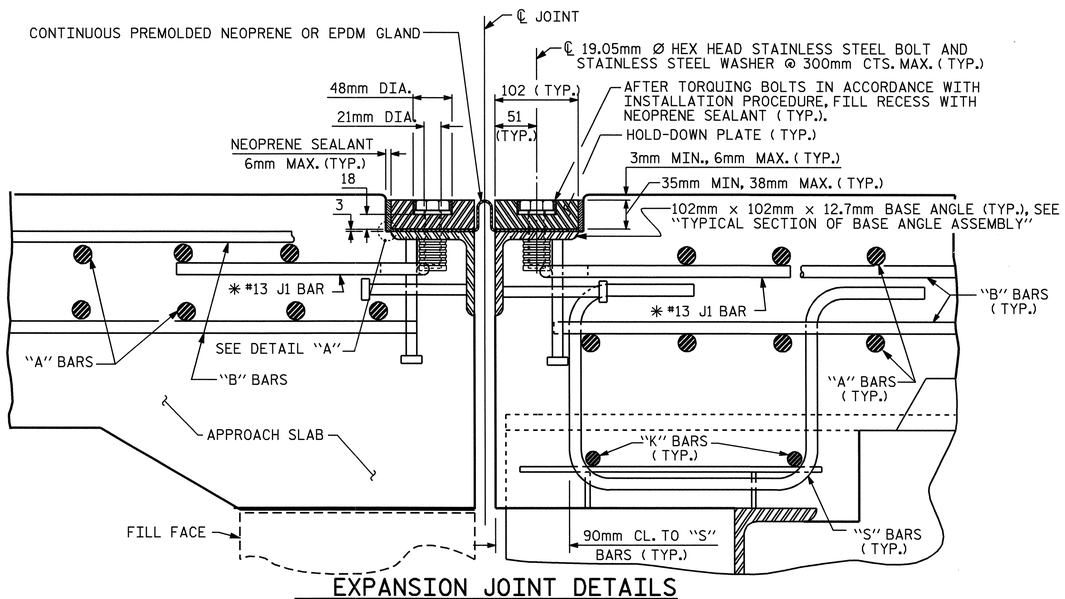

EXPANSION JOINT DETAILS

SECTION NORMAL TO JOINT -- STEEL SUPERSTRUCTURE
(END BENT #1 SHOWN; END BENT #2 SIMILAR)

✳ THE QUANTITY OF #13 J1 BARS ON THE BILL OF MATERIAL IS BASED ON 300mm CENTERS. J1 BARS SHALL BE PLACED AT EACH VERTICAL STUD ANCHOR BOLT. IN THE EVENT THAT THE NUMBER OF VERTICAL STUD ANCHOR BOLTS EXCEEDS THE NUMBER OF J1 BARS SPECIFIED, ADDITIONAL J1 BARS WILL NOT BE REQUIRED.

MOVEMENT AND SETTING AT JOINT					
END BENT NO.	SKEW ANGLE (TO SHORT CHORD)	TOTAL MOVEMENT (ALONG ℄ RDWY)	PERPENDICULAR JOINT OPENING AT 0° C	PERPENDICULAR JOINT OPENING AT 16° C	PERPENDICULAR JOINT OPENING AT 32° C
1	92°-57'-7"	65	77	58	38
2	86°-14'-7"	65	77	58	38

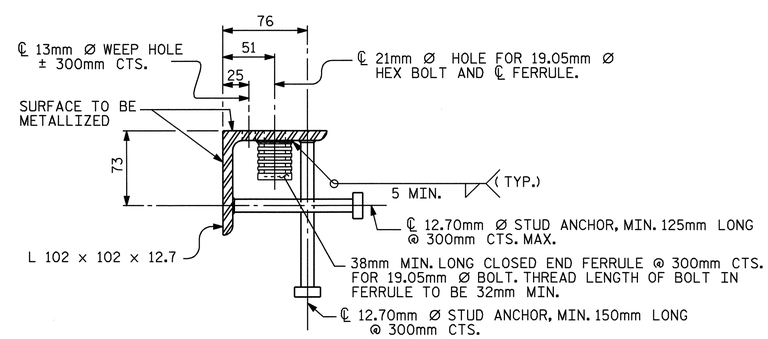

TYPICAL SECTION OF BASE ANGLE ASSEMBLY

PROJECT NO. R-0609IA
GUILFORD COUNTY
STATION: 19+26.763 -FLY-

SHEET 1 OF 2

STATE OF NORTH CAROLINA
DEPARTMENT OF TRANSPORTATION
RALEIGH

SUPERSTRUCTURE

EXPANSION JOINT SEAL DETAILS

NORTH CAROLINA PROFESSIONAL SEAL 23926 ENGINEER BRIAN C. HAWKS
5/22/06

REVISIONS								SHEET NO.
NO.	BY:	DATE:	NO.	BY:	DATE:			S-299
1			3					TOTAL SHEETS
2			4					321

ASSEMBLED BY : K.W. ALFORD		DATE : 07/14/05	
CHECKED BY : R.W. WRIGHT		DATE : 07/20/05	
DRAWN BY : REK 9/87	REV. 8/16/99	RWW/LES	
CHECKED BY : CRK 10/87	REV. 10/17/00	RWW/LES	
	REV. 5/7/03R	RWW/JTE	

15-MAY-2006 11:39
J:\STRUCT~1\frye\FINAL_~1\Str9\R0609IA_sd_JS_09.dgn
rwwright

STR. #9

STD. NO. EJS1SM

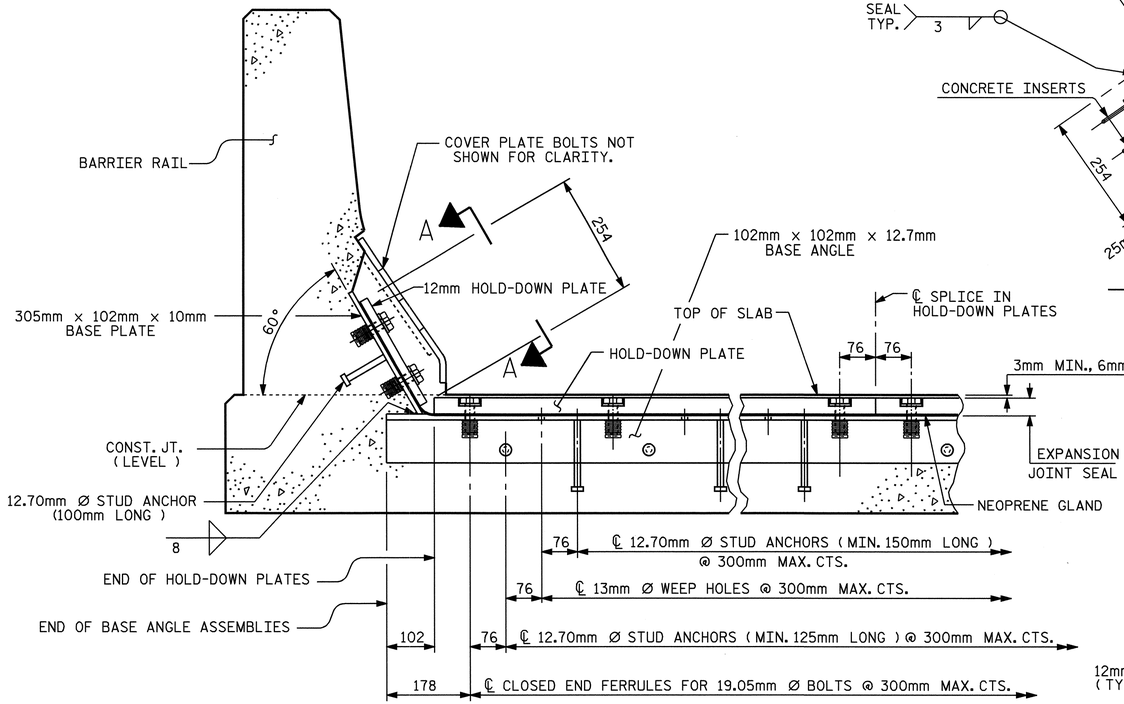

SECTION THRU RAIL NORMAL TO JOINT

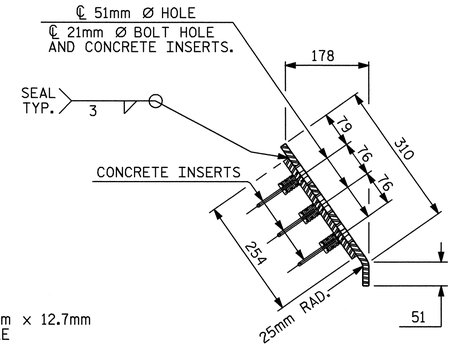

END VIEW

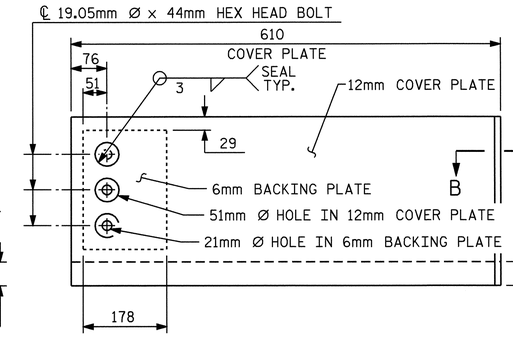

TYPE I - ELEVATION VIEW

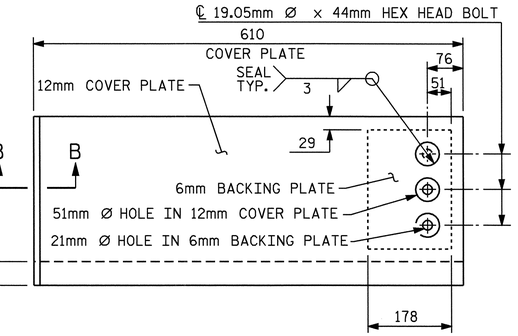

TYPE II - ELEVATION VIEW

COVER PLATE DETAILS

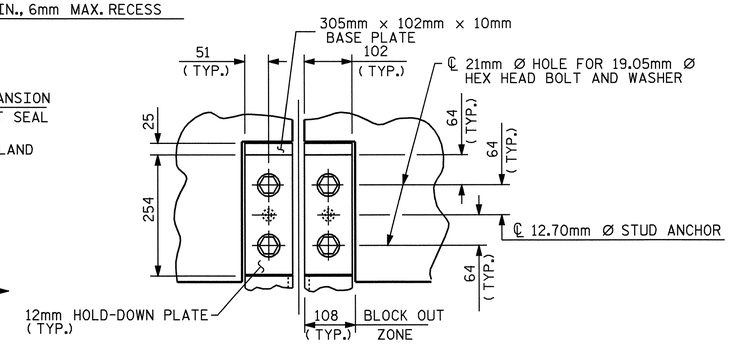

SECTION A - A

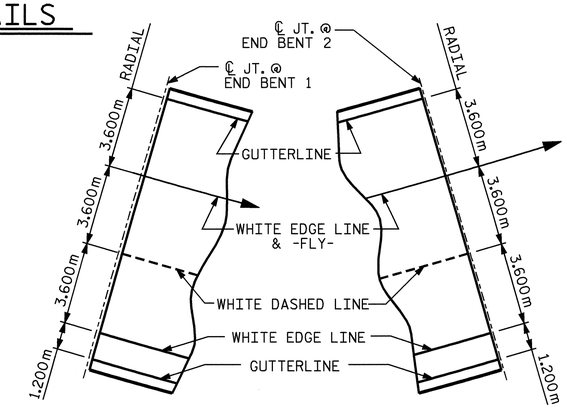

PAVEMENT MARKING ALIGNMENT

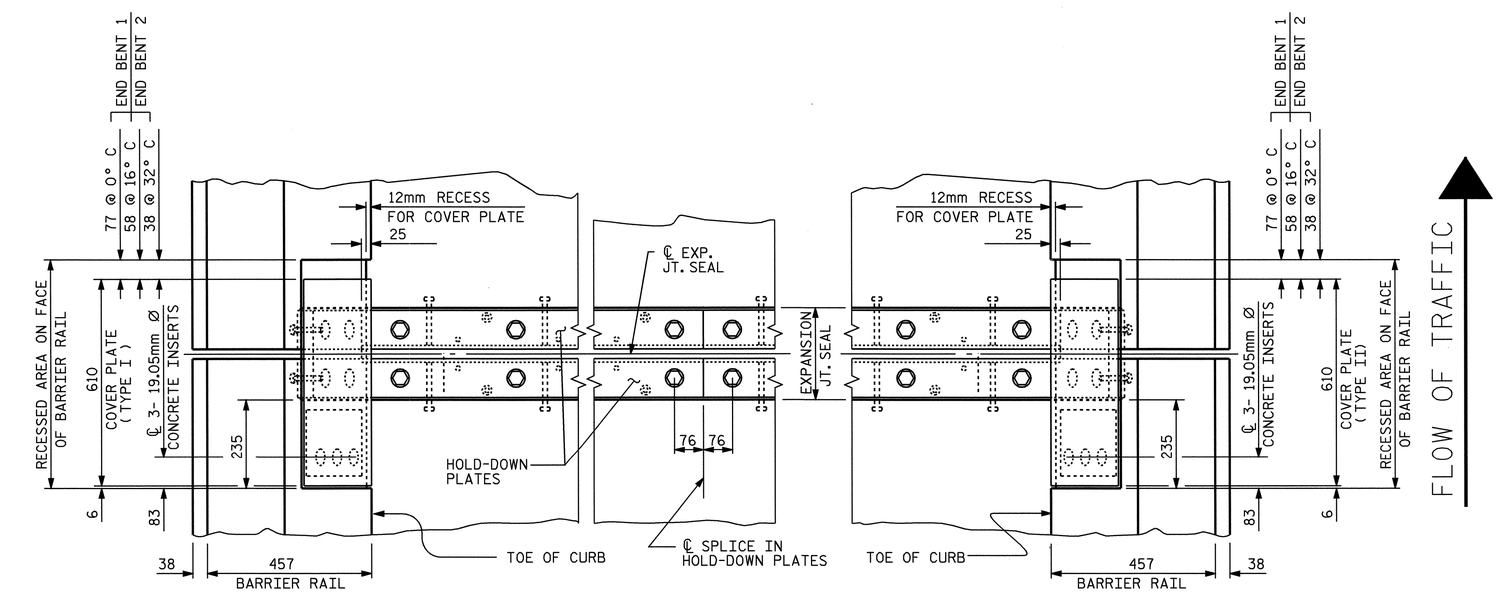

PLAN OF EXPANSION JOINT SEAL - LEFT SIDE

PLAN OF EXPANSION JOINT SEAL - RIGHT SIDE

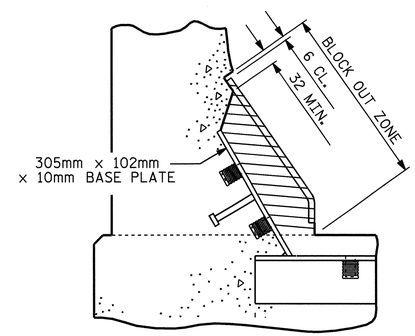

BLOCK OUT DETAIL

SEE "SECTION A - A" FOR OTHER DETAILS.

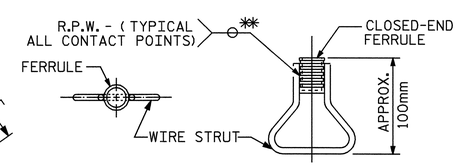

PLAN ELEVATION

CONCRETE INSERT

** EACH WELDED ATTACHMENT OF WIRE TO FERRULE SHALL DEVELOP THE TENSILE STRENGTH OF THE WIRE

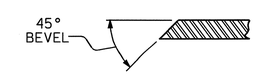

SECTION B - B

PROJECT NO. R-0609IA

GUILFORD COUNTY

STATION: 19+26.763 -FLY-

SHEET 2 OF 2

STATE OF NORTH CAROLINA
DEPARTMENT OF TRANSPORTATION
RALEIGH

SUPERSTRUCTURE

EXPANSION JOINT SEAL DETAILS FOR BARRIER RAIL

NORTH CAROLINA PROFESSIONAL SEAL 23926 ENGINEER BRIAN C. HANKS
5/22/06

ASSEMBLED BY : K.W. ALFORD	DATE : 07/14/05		
CHECKED BY : R.W. WRIGHT	DATE : 07/20/05		
DRAWN BY : REK 9/87	REV. 5/16/97	EEM/RGW	
CHECKED BY : CRK 10/87	REV. 7/17/98	RWW/LES	
	REV. 10/17/00	RWW/LES	

REVISIONS						SHEET NO.
NO.	BY:	DATE:	NO.	BY:	DATE:	S-300
1			3			TOTAL SHEETS
2			4			321

STR. #9

STD. NO. EJS2SM

15-MAY-2006 11:38
J:\STRUCT~1\frye\FINAL_~1\Str9\R0609IA_sd_JS_09.dgn
rwwright

NOTES:

FOR CONCRETE DECK POUR DETAILS, SEE "CONCRETE DECK POUR DETAILS" SHEET.

BILL OF MATERIAL

SPANS A, B, C, & D

BAR	NO.	SIZE	TYPE	LENGTH	WEIGHT
✳ A1	1185	#16	STR	12880	23688
A2	1185	#16	STR	12880	23688
✳ B1	39	#13	STR	8940	347
✳ B2	54	#13	STR	8440	453
B3	190	#16	STR	16700	4924
B4	150	#16	STR	16900	3934
B5	190	#16	STR	17180	5066
✳ B6	477	#22	STR	10420	15120
✳ B7	81	#13	STR	6960	560
✳ B8	81	#13	STR	7180	578
✳ B9	108	#13	STR	8160	876
✳ J1	84	#13	4	440	37
✳ K1	8	#16	2	2660	33
✳ K2	12	#16	STR	2960	55
✳ K3	8	#16	1	2420	30
✳ S1	60	#13	3	1160	69

REINFORCING STEEL - 37612 kg

EPOXY COATED REINFORCING STEEL - 41846 kg

BAR TYPES

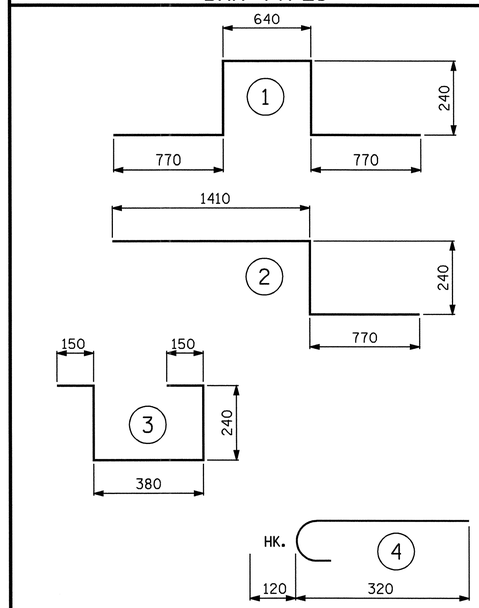

ALL BAR DIMENSIONS ARE OUT TO OUT

SUPERSTRUCTURE BILL OF MATERIAL

	CLASS AA CONCRETE	REINFORCING STEEL	EPOXY COATED REINFORCING STEEL
	(CU.METER)	(kg)	(kg)
POUR #1	71.7	37612	41846
POUR #2	173.4		
POUR #3	182.4		
POUR #4	155.6		
TOTALS✳✳	583.1	37612	41846

✳✳ QUANTITIES FOR BARRIER RAIL ARE NOT INCLUDED

SUPERSTRUCTURE REINFORCING STEEL LENGTHS ARE BASED ON THE FOLLOWING MINIMUM SPLICE LENGTHS

BAR SIZE	SUPERSTRUCTURE EXCEPT APPROACH SLABS, PARAPET, AND BARRIER RAIL		APPROACH SLABS		PARAPET AND BARRIER RAIL
	EPOXY COATED	UNCOATED	EPOXY COATED	UNCOATED	
#13	610	540	610	540	840
#16	770	660	770	660	1050
#19	920	790	1190	790	1330
#22	1580	1060			
#25	2080	1390			

GROOVING BRIDGE FLOORS

APPROACH SLABS	167.4	SQ.METER
BRIDGE DECK	1798.3	SQ.METER
TOTAL	1965.7	SQ.METER

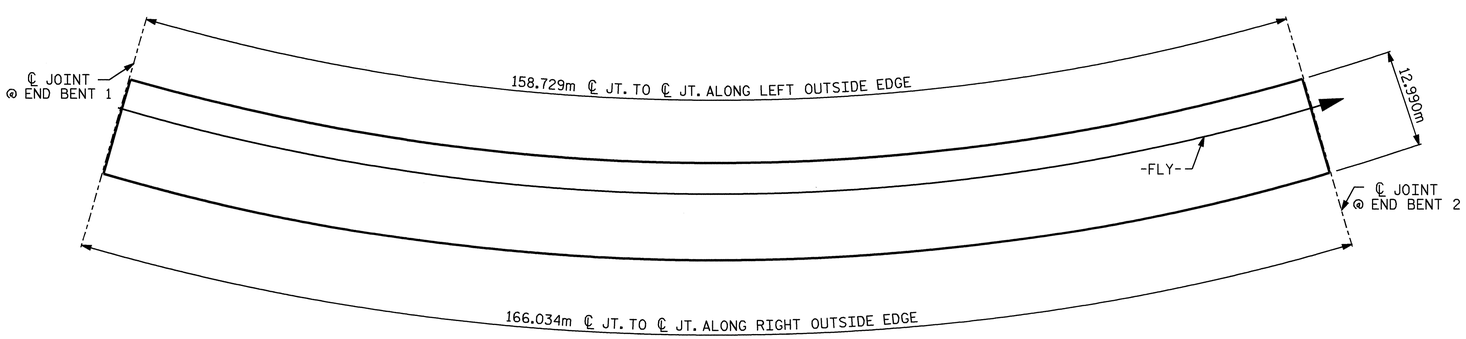

LAYOUT FOR COMPUTING AREA
OF REINFORCED CONCRETE DECK SLAB
(SQ. METER = 2108.6)

PROJECT NO. R-0609IA
GUILFORD COUNTY
STATION: 19+26.763 -FLY-

STATE OF NORTH CAROLINA
DEPARTMENT OF TRANSPORTATION
RALEIGH

SUPERSTRUCTURE
BILL OF MATERIAL

NORTH CAROLINA PROFESSIONAL SEAL 23926 ENGINEER BRIAN C. HAWKS
5/22/06

REVISIONS								SHEET NO.
NO.	BY:	DATE:	NO.	BY:	DATE:			S-301
1			3					TOTAL SHEETS
2			4					321

DRAWN BY : William T. Parker DATE : 06/01/05
CHECKED BY : K.W.ALFORD DATE : 6/30/05

15-MAY-2006 11:37
J:\STRUCT~1\frye\FINAL_~1\Str9\r0609a_sd_09_bom.dgn
rwwright

STR. #9

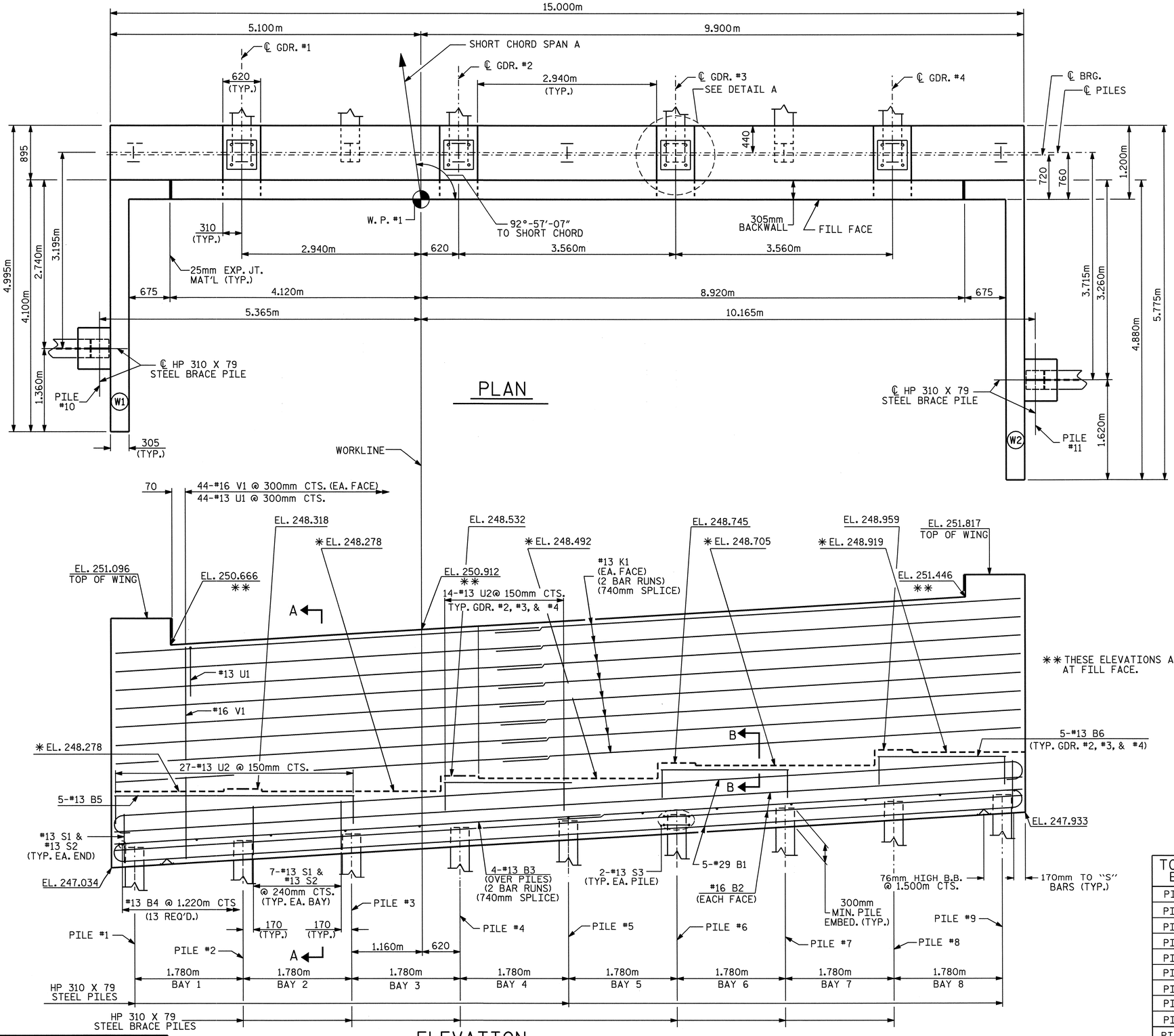

NOTES

STIRRUPS IN CAP MAY BE SHIFTED AS NECESSARY TO CLEAR ANCHOR BOLTS.

FOR PILE SPLICE DETAILS, SEE SHEET 3 OF 3.

BACKWALL SHALL BE PLACED BEFORE APPLYING THE EPOXY PROTECTIVE COATING.

THE TOP SURFACE AREAS OF THE END BENT CAPS SHALL BE CURED IN ACCORDANCE WITH THE STANDARD SPECIFICATIONS EXCEPT THE MEMBRANE CURING COMPOUND METHOD SHALL NOT BE USED.

✳ THE TOP SURFACE OF THE CAP EXCEPT THE BRIDGE SEAT BUILDUPS SHALL BE SLOPED TRANSVERSELY FROM THE FILL FACE TO THE BACK FACE AT THE RATE OF 2 %.

FOR TEMPORARY DRAINAGE AT END BENT, SEE SHEET 3 OF 3.

THE CONTRACTOR SHALL PROVIDE FOR INSTALLATION OF THE 102mm DIAMETER DRAIN PIPE THROUGH THE WING WALL AS REQUIRED FOR REINFORCED BRIDGE APPROACH FILLS, SEE THE ROADWAY PLANS. REINFORCING STEEL IN THE WING WALL MAY BE SHIFTED AS NECESSARY TO CLEAR THE DRAIN PIPE.

FOR EPOXY PROTECTIVE COATING, SEE SPECIAL PROVISIONS.

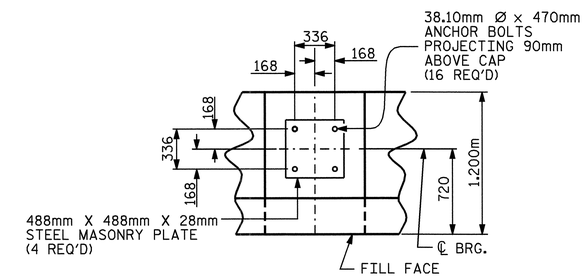

DETAIL A
(TYP. EA. GIRDER)

TOP OF PILE ELEVATIONS	
PILE #1	247.366
PILE #2	247.473
PILE #3	247.579
PILE #4	247.686
PILE #5	247.793
PILE #6	247.899
PILE #7	248.006
PILE #8	248.113
PILE #9	248.219
PILE #10	247.339
PILE #11	248.238

NORTH CAROLINA PROFESSIONAL SEAL 23926 ENGINEER BRIAN C. HANKS
5/22/06

PROJECT NO. R-0609IA
GUILFORD COUNTY
STATION: 19+26.763 -FLY-

SHEET 1 OF 3

STATE OF NORTH CAROLINA
DEPARTMENT OF TRANSPORTATION
RALEIGH

SUBSTRUCTURE
END BENT 1

REVISIONS						SHEET NO.
NO.	BY:	DATE:	NO.	BY:	DATE:	S-302
1			3			TOTAL SHEETS
2			4			321

DRAWN BY : QT NGUYEN DATE : 2-05
CHECKED BY : RW WRIGHT DATE : 4-05

15-MAY-2006 11:34
J:\STRUCT~1\frye\FINAL_~1\Str9\R0609IA_sd_E_09.dgn
rwwright

STR.#9

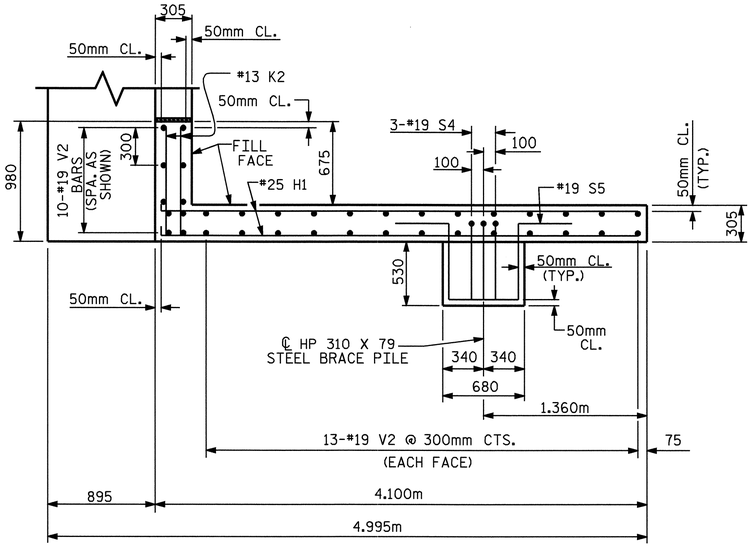

PLAN OF WING W1

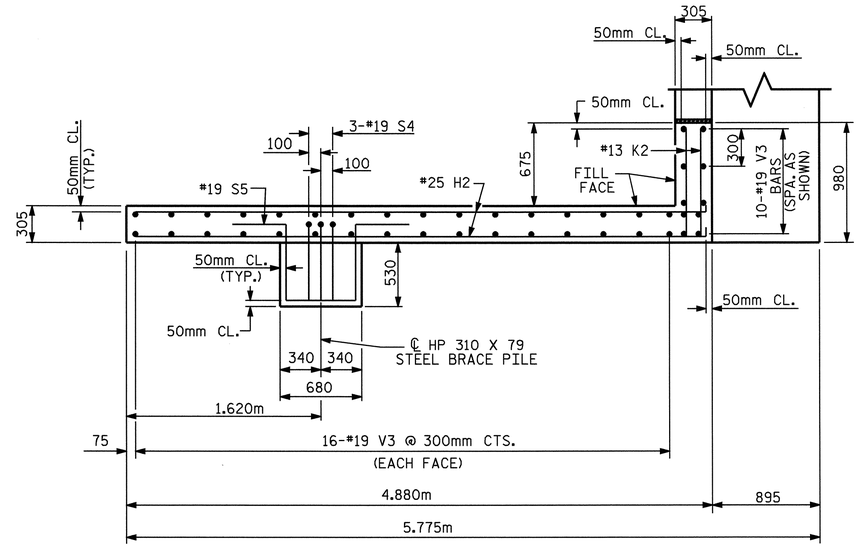

PLAN OF WING W2

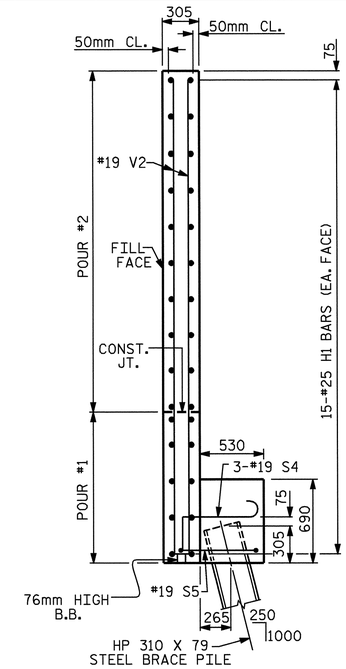

SECTION X-X

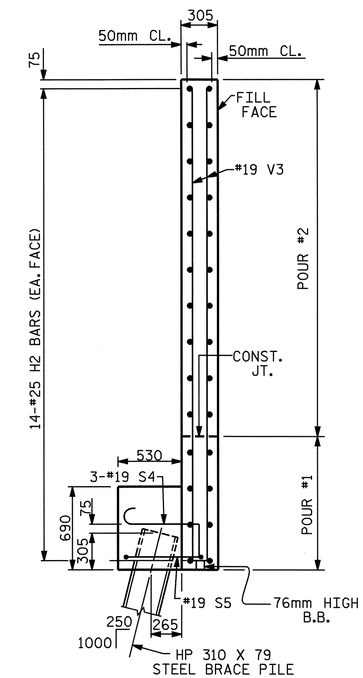

SECTION Y-Y

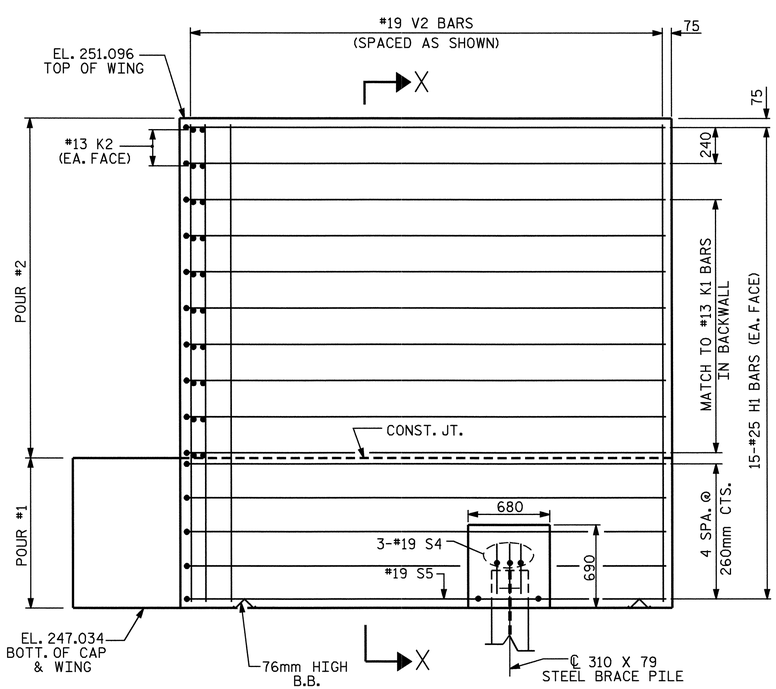

ELEVATION OF WING W1

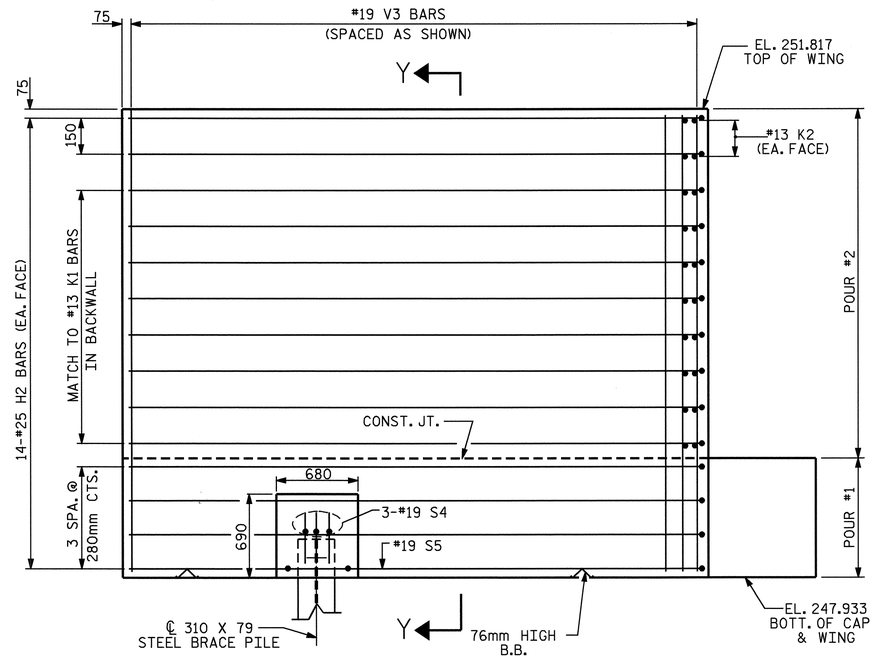

ELEVATION OF WING W2

PROJECT NO. R-0609IA
GUILFORD COUNTY
STATION: 19+26.763 -FLY-

SHEET 2 OF 3

STATE OF NORTH CAROLINA
DEPARTMENT OF TRANSPORTATION
RALEIGH

SUBSTRUCTURE
END BENT 1

NORTH CAROLINA PROFESSIONAL SEAL 23926 ENGINEER BRIAN C. HANKS
5/22/06

REVISIONS								SHEET NO.
NO.	BY:	DATE:	NO.	BY:	DATE:			S-303
1			3					TOTAL SHEETS
2			4					321

STR. #9

DRAWN BY : QT NGUYEN DATE : 2-05
CHECKED BY : RW WRIGHT DATE : 4-05

15-MAY-2006 11:33
J:\STRUCT~1\frye\FINAL_~1\Str9\R0609IA_sd_E_09.dgn
rwwright

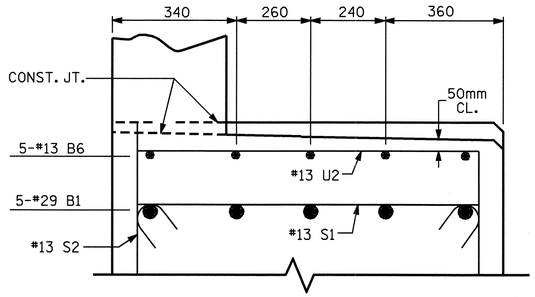

PARTIAL SECTION B-B

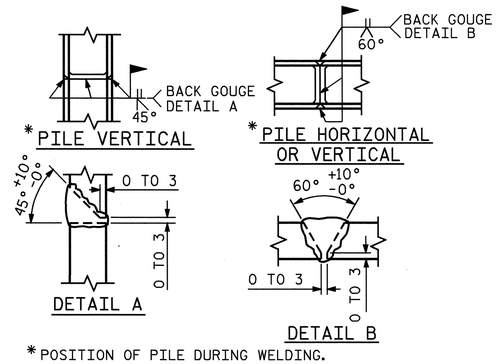

* POSITION OF PILE DURING WELDING.

PILE SPLICE DETAILS

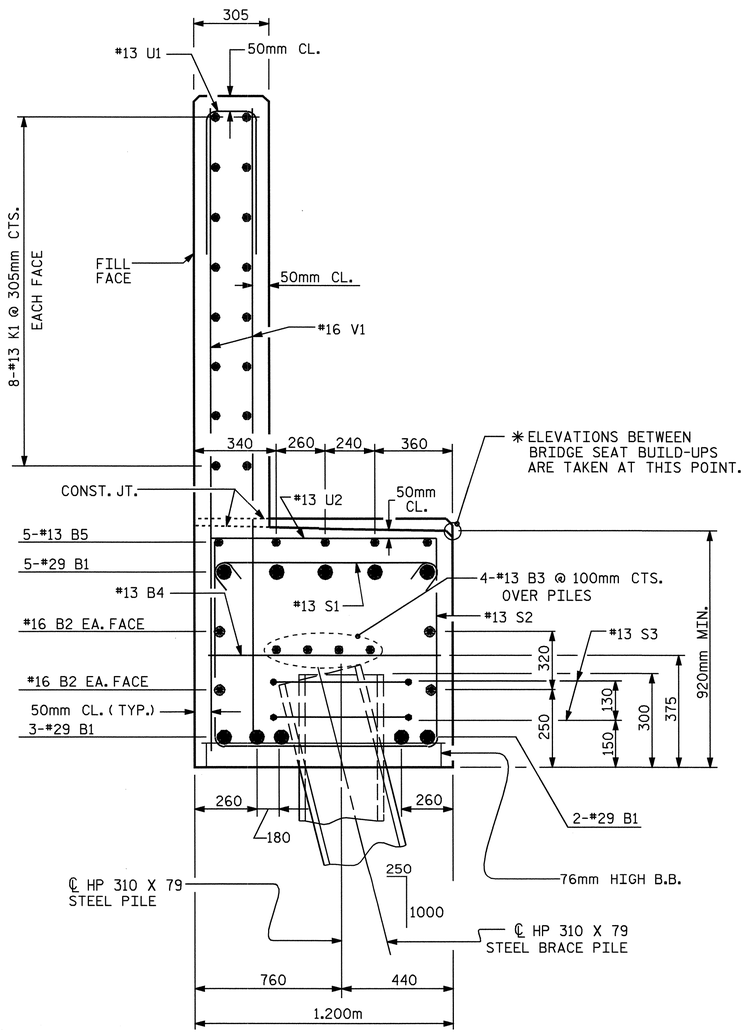

SECTION A-A

BAR TYPES

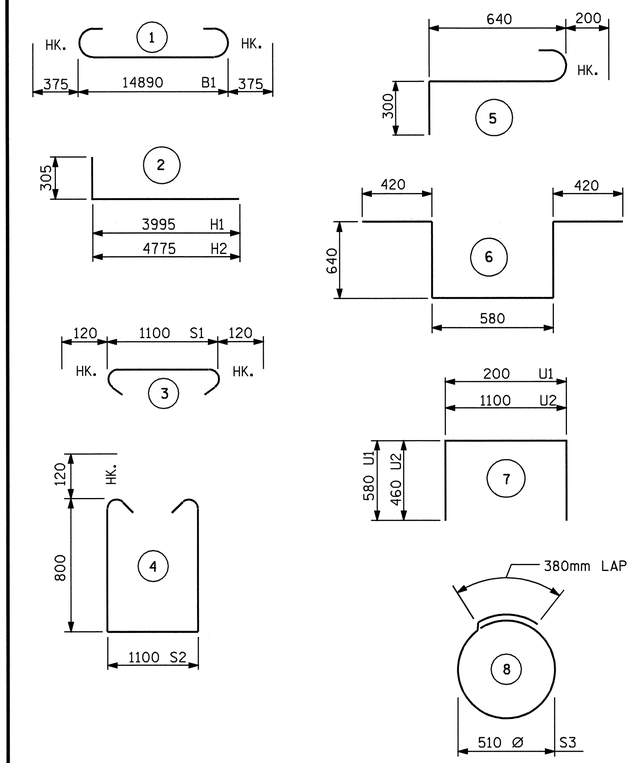

ALL BAR DIMENSIONS ARE OUT TO OUT.

BILL OF MATERIAL
END BENT 1

BAR	NO.	SIZE	TYPE	LENGTH	WEIGHT
B1	10	#29	1	15640	791
B2	4	#16	STR	14800	92
B3	8	#13	STR	7820	62
B4	13	#13	STR	1100	14
B5	5	#13	STR	3940	20
B6	15	#13	STR	2100	31
H1	30	#25	2	4300	513
H2	28	#25	2	5080	565
K1	32	#13	STR	7820	249
K2	8	#13	STR	880	7
S1	58	#13	3	1340	77
S2	58	#13	4	2940	169
S3	18	#13	8	1980	35
S4	6	#19	5	1140	15
S5	2	#19	6	2700	12
U1	44	#13	7	1360	59
U2	69	#13	7	2020	139
V1	88	#16	STR	3400	464
V2	36	#19	STR	3960	319
V3	42	#19	STR	3780	355

REINFORCING STEEL = 3988 KG

CLASS A CONCRETE BREAKDOWN

POUR #1 (CAP & LOWER WINGS)	M3	22.4
POUR #2 (BACKWALL & UPPER WINGS)	M3	19.1
TOTAL	M3	41.5

HP 310 X 79 STEEL PILES
NO 11 187 METERS

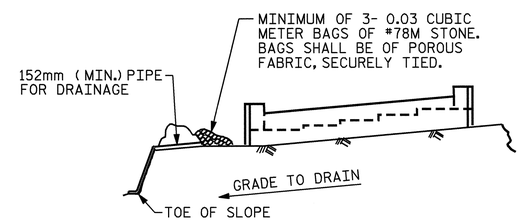

BAGGED STONE AND PIPE SHALL BE PLACED IMMEDIATELY AFTER COMPLETION OF END BENT EXCAVATION. PIPE MAY BE EITHER CONCRETE, CORRUGATED STEEL, CORRUGATED ALUMINUM ALLOY, OR CORRUGATED PLASTIC. PERFORATED PIPE WILL NOT BE ALLOWED.

BAGGED STONE SHALL REMAIN IN PLACE UNTIL THE ENGINEER DIRECTS THAT IT BE REMOVED. THE CONTRACTOR SHALL REMOVE AND DISPOSE OF SILT ACCUMULATIONS AT BAGGED STONE WHEN SO DIRECTED BY THE ENGINEER. BAGS SHALL BE REMOVED AND REPLACED WHENEVER THE ENGINEER DETERMINES THAT THEY HAVE DETERIORATED AND LOST THEIR EFFECTIVENESS.

NO SEPARATE PAYMENT WILL BE MADE FOR THIS WORK AND THE ENTIRE COST OF THIS WORK SHALL BE INCLUDED IN THE UNIT CONTRACT PRICE BID FOR THE SEVERAL PAY ITEMS.

TEMPORARY DRAINAGE AT END BENT

PROJECT NO. R-0609IA
GUILFORD COUNTY
STATION: 19+26.763 -FLY-

SHEET 3 OF 3

STATE OF NORTH CAROLINA
DEPARTMENT OF TRANSPORTATION
RALEIGH

SUBSTRUCTURE
END BENT 1

NORTH CAROLINA PROFESSIONAL SEAL 23926 ENGINEER BRIAN C. HANKS
5/22/06

REVISIONS						SHEET NO.
NO.	BY:	DATE:	NO.	BY:	DATE:	S-304
1			3			TOTAL SHEETS
2			4			321

STR. #9

DRAWN BY : QT NGUYEN DATE : 2-05
CHECKED BY : RW WRIGHT DATE : 4-05

15-MAY-2006 11:33
J:\STRUCT~1\frye\FINAL_~1\Str9\R0609IA_sd_E_09.dgn
rwwright

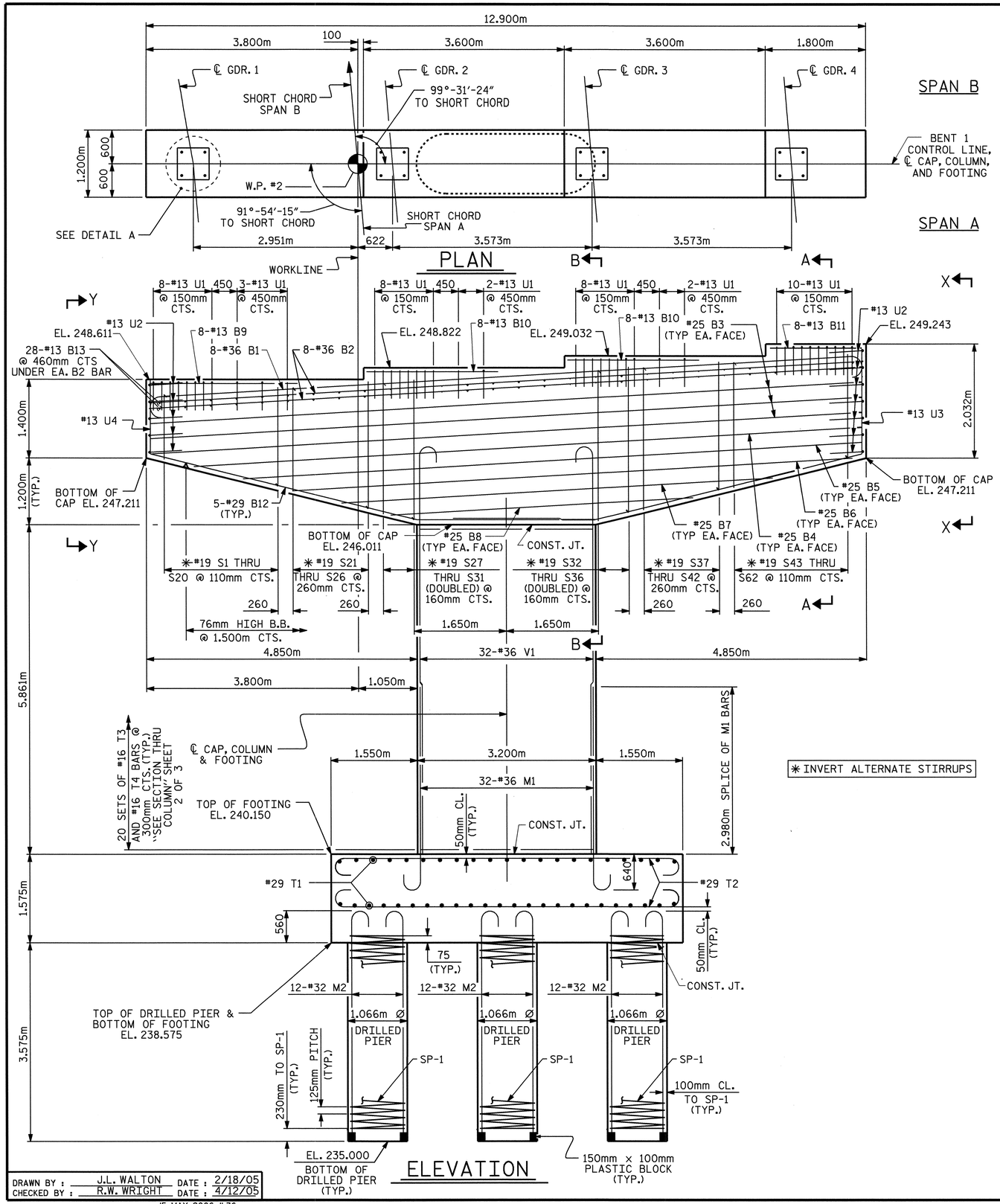

✳ INVERT ALTERNATE STIRRUPS

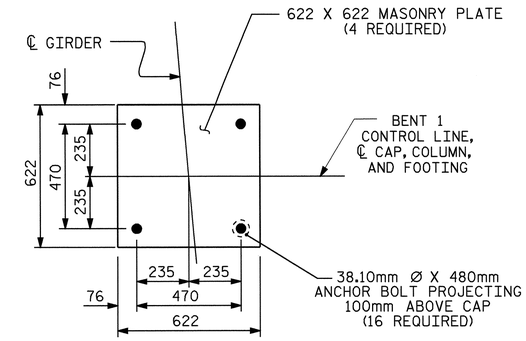

NOTES

STIRRUPS IN CAP MAY BE SHIFTED AS NECESSARY TO CLEAR ANCHOR BOLTS.

HOOKS ON "V" BARS MAY BE TURNED AS NECESSARY FOR PLACING REINFORCING STEEL.

ALL STEEL IN THE DRILLED PIERS IS INCLUDED IN THE PAY ITEMS FOR "REINFORCING STEEL" AND "SPIRAL COLUMN REINFORCING STEEL".

THE CONTRACTOR'S ATTENTION IS CALLED TO THE FACT THAT THE LONGITUDINAL REINFORCEMENT FOR THE DRILLED PIERS IS DETAILED WITH ONE METER OF EXTRA LENGTH.

DETAILED DRAWINGS FOR FALSEWORK AND FORMS FOR THIS HAMMERHEAD BENT SHALL BE SUBMITTED. SEE SHEET SNSM.

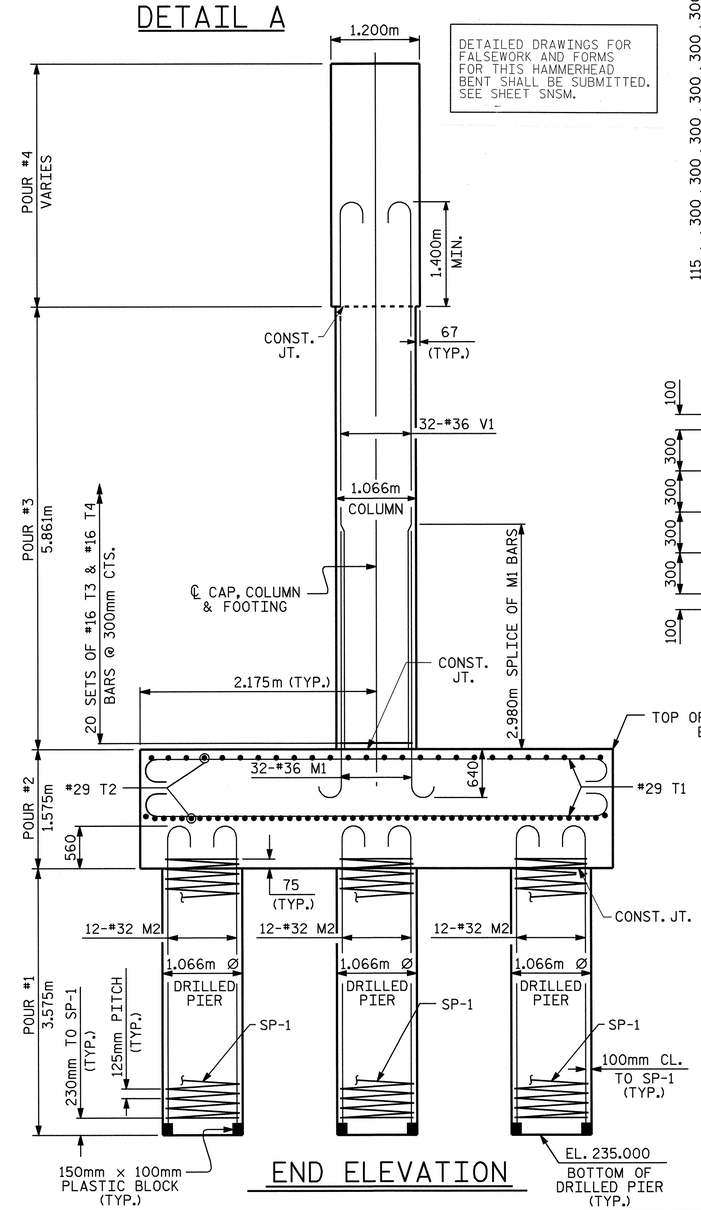

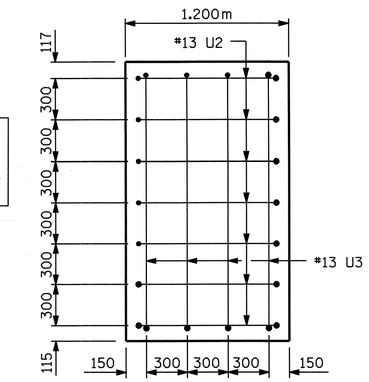

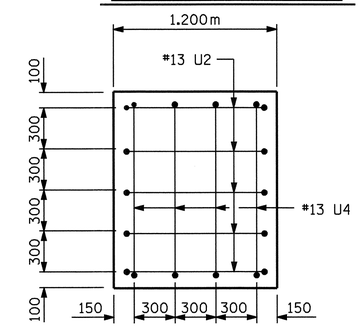

NORTH CAROLINA PROFESSIONAL SEAL 23926 ENGINEER BRIAN C. HAWKS 3/22/06

PROJECT NO. R-0609IA
GUILFORD COUNTY
STATION: 19+26.763 -FLY-

SHEET 1 OF 3

STATE OF NORTH CAROLINA
DEPARTMENT OF TRANSPORTATION
RALEIGH

SUBSTRUCTURE
BENT 1

REVISIONS							SHEET NO.
NO.	BY:	DATE:	NO.	BY:	DATE:		S-305
1			3				TOTAL SHEETS
2			4				321

DRAWN BY : J.L. WALTON DATE : 2/18/05
CHECKED BY : R.W. WRIGHT DATE : 4/12/05

15-MAY-2006 11:36
J:\STRUCT-1\frye\FINAL_~1\Str9\R-0609IA_sd_B*_09.dgn
rwwright

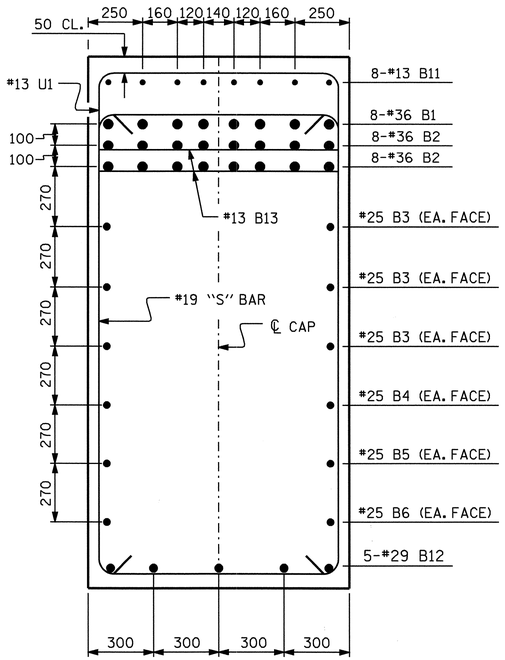

SECTION A-A

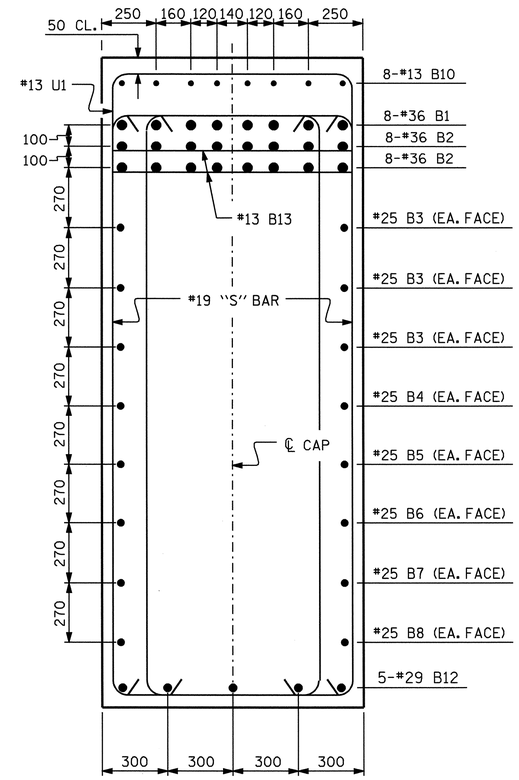

SECTION B-B

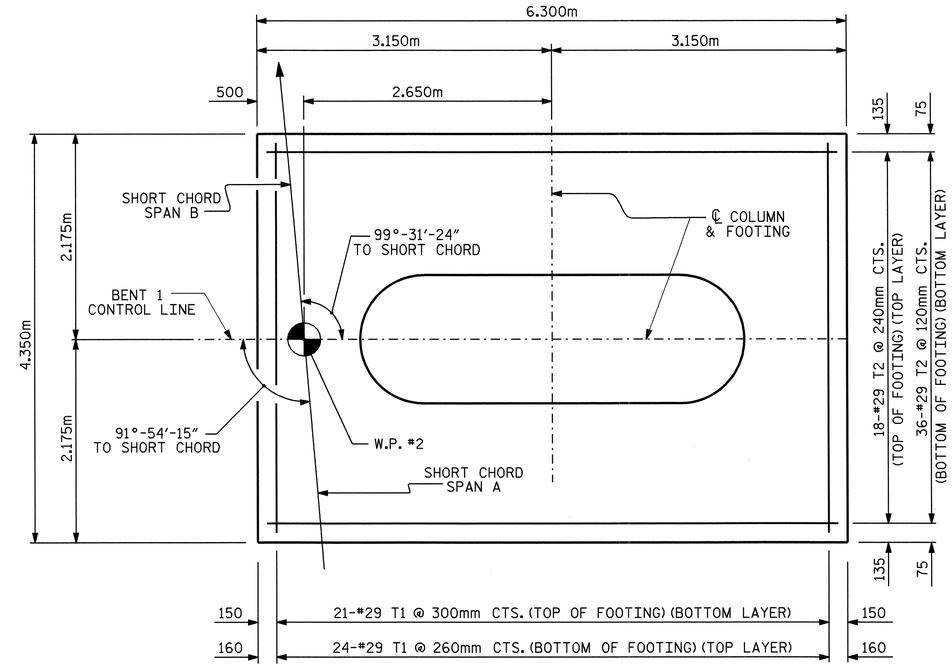

PLAN OF FOOTING

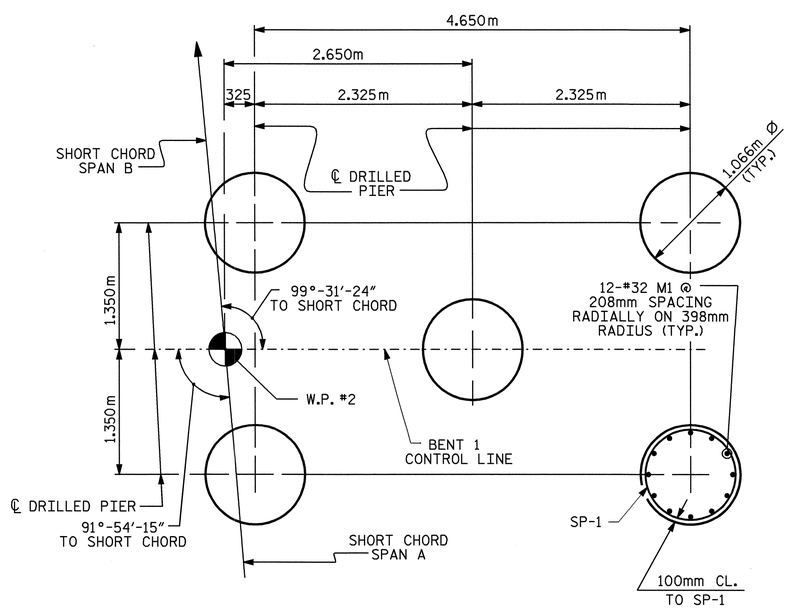

PLAN OF DRILLED PIERS

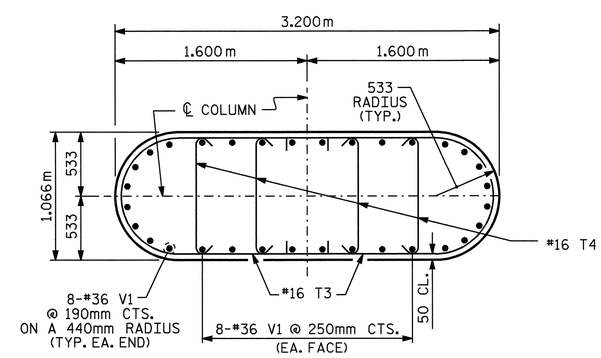

SECTION THRU COLUMN

(M1 BARS TO MATCH V1 BARS IN COLUMN)

PROJECT NO. R-0609IA
GUILFORD COUNTY
STATION: 19+26.763 -FLY-

SHEET 2 OF 3

STATE OF NORTH CAROLINA
DEPARTMENT OF TRANSPORTATION
RALEIGH

SUBSTRUCTURE
BENT 1

NORTH CAROLINA PROFESSIONAL SEAL 23926 ENGINEER BRIAN C. HANKS
5/22/06

REVISIONS						SHEET NO.
NO.	BY:	DATE:	NO.	BY:	DATE:	S-306
1			3			TOTAL SHEETS
2			4			321

DRAWN BY : J.L. WALTON DATE : 2/18/05
CHECKED BY : R.W. WRIGHT DATE : 4/12/05

15-MAY-2006 11:36
J:\STRUCT~1\frye\FINAL_~1\Str9\R-0609IA_sd_B*_09.dgn
rwwright

STR. #9

BAR TYPES

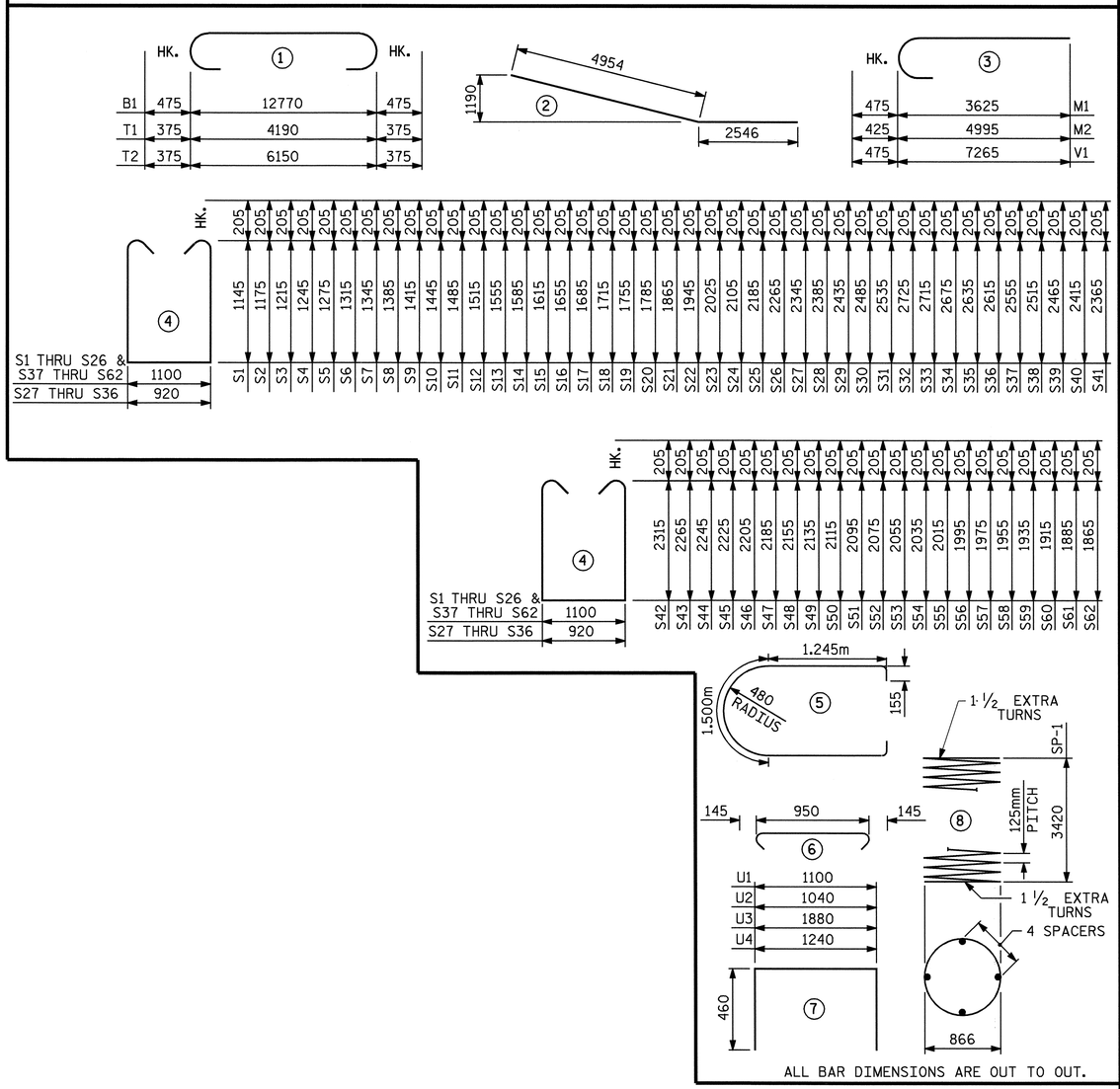

ALL BAR DIMENSIONS ARE OUT TO OUT.

BILL OF MATERIAL BENT 1

BAR	NO.	SIZE	TYPE	LENGTH	WEIGHT
B1	8	#36	1	13720	868
B2	16	#36	STR	12820	1622
B3	6	#25	STR	12820	306
B4	2	#25	STR	12040	96
B5	2	#25	STR	11160	89
B6	2	#25	STR	10120	80
B7	2	#25	STR	7800	62
B8	2	#25	STR	5500	44
B9	8	#13	STR	2640	21
B10	16	#13	STR	2360	38
B11	8	#13	STR	1540	12
B12	10	#29	2	7500	379
B13	56	#13	STR	1100	61
M1	32	#36	3	4100	1037
M2	60	#32	3	5420	2083
S1	1	#19	4	3800	8
S2	1	#19	4	3860	9
S3	1	#19	4	3940	9
S4	1	#19	4	4000	9
S5	1	#19	4	4060	9
S6	1	#19	4	4140	9
S7	1	#19	4	4200	9
S8	1	#19	4	4280	10
S9	1	#19	4	4340	10
S10	1	#19	4	4400	10
S11	1	#19	4	4480	10
S12	1	#19	4	4540	10
S13	1	#19	4	4620	10
S14	1	#19	4	4680	10
S15	1	#19	4	4740	11
S16	1	#19	4	4820	11
S17	1	#19	4	4880	11
S18	1	#19	4	4940	11
S19	1	#19	4	5020	11
S20	1	#19	4	5080	11
S21	1	#19	4	5240	12
S22	1	#19	4	5400	12
S23	1	#19	4	5560	12
S24	1	#19	4	5720	13
S25	1	#19	4	5880	13
S26	1	#19	4	6040	13
S27	2	#19	4	6020	27
S28	2	#19	4	6100	27
S29	2	#19	4	6200	28
S30	2	#19	4	6300	28
S31	2	#19	4	6400	29
S32	2	#19	4	6780	30
S33	2	#19	4	6760	30
S34	2	#19	4	6680	30
S35	2	#19	4	6600	30
S36	2	#19	4	6560	29
S37	1	#19	4	6620	15
S38	1	#19	4	6540	15
S39	1	#19	4	6440	14
S40	1	#19	4	6340	14
S41	1	#19	4	6240	14
S42	1	#19	4	6140	14
S43	1	#19	4	6040	13
S44	1	#19	4	6000	13
S45	1	#19	4	5960	13
S46	1	#19	4	5920	13
S47	1	#19	4	5880	13
S48	1	#19	4	5820	13
S49	1	#19	4	5780	13
S50	1	#19	4	5740	13
S51	1	#19	4	5700	13
S52	1	#19	4	5660	13
S53	1	#19	4	5620	13
S54	1	#19	4	5580	12

BAR	NO.	SIZE	TYPE	LENGTH	WEIGHT
S55	1	#19	4	5540	12
S56	1	#19	4	5500	12
S57	1	#19	4	5460	12
S58	1	#19	4	5420	12
S59	1	#19	4	5380	12
S60	1	#19	4	5340	12
S61	1	#19	4	5280	12
S62	1	#19	4	5240	12
T1	45	#29	1	4940	1125
T2	54	#29	1	6900	1885
T3	40	#16	5	4300	267
T4	80	#16	6	1240	154
U1	41	#13	7	2020	82
U2	12	#13	7	1960	23
U3	4	#13	7	2800	11
U4	4	#13	7	2160	9
V1	32	#36	3	7740	1958

REINFORCING STEEL	KG.	13210
SP-1 5 ✱✱ 8 80200		622
SPIRAL COLUMN REINFORCING STEEL	KG.	622
CLASS "A" CONCRETE		
POUR #2 (FOOTING)	M3	43.2
POUR #3 (COLUMN)	M3	18.6
POUR #4 (CAP)	M3	37.4
TOTAL CONCRETE	M3	99.2

DRILLED PIER QUANTITIES

DRILLED PIER CONCRETE		
POUR #1 (DRILLED PIERS)	M3	16.0
1066mm Ø DRILLED PIER IN SOIL	METERS	0.0
1066mm Ø DRILLED PIER NOT IN SOIL	METERS	18.0
CSL TUBES	METERS	86.7

✱✱ THE SP-1 SPIRAL REINFORCING STEEL SHALL BE W31 OR D-31 COLD DRAWN WIRE OR #16 PLAIN OR DEFORMED BAR.

FOUNDATION EXCAVATION LUMP SUM

PROJECT NO. R-0609IA
GUILFORD COUNTY
STATION: 19+26.763 -FLY-

SHEET 3 OF 3

STATE OF NORTH CAROLINA
DEPARTMENT OF TRANSPORTATION
RALEIGH

SUBSTRUCTURE
BENT 1

NORTH CAROLINA PROFESSIONAL SEAL 23926 ENGINEER BRIAN C. HANKS
5/22/06

REVISIONS								SHEET NO.
NO.	BY:	DATE:	NO.	BY:	DATE:			S-307
1			3					TOTAL SHEETS
2			4					321

DRAWN BY : J.L. WALTON DATE : 2/18/05
CHECKED BY : R.W. WRIGHT DATE : 4/12/05

15-MAY-2006 11:36
J:\STRUCT~1\frye\FINAL_~1\Str9\R-0609IA_sd_B*_09.dgn
rwwright

STR. #9

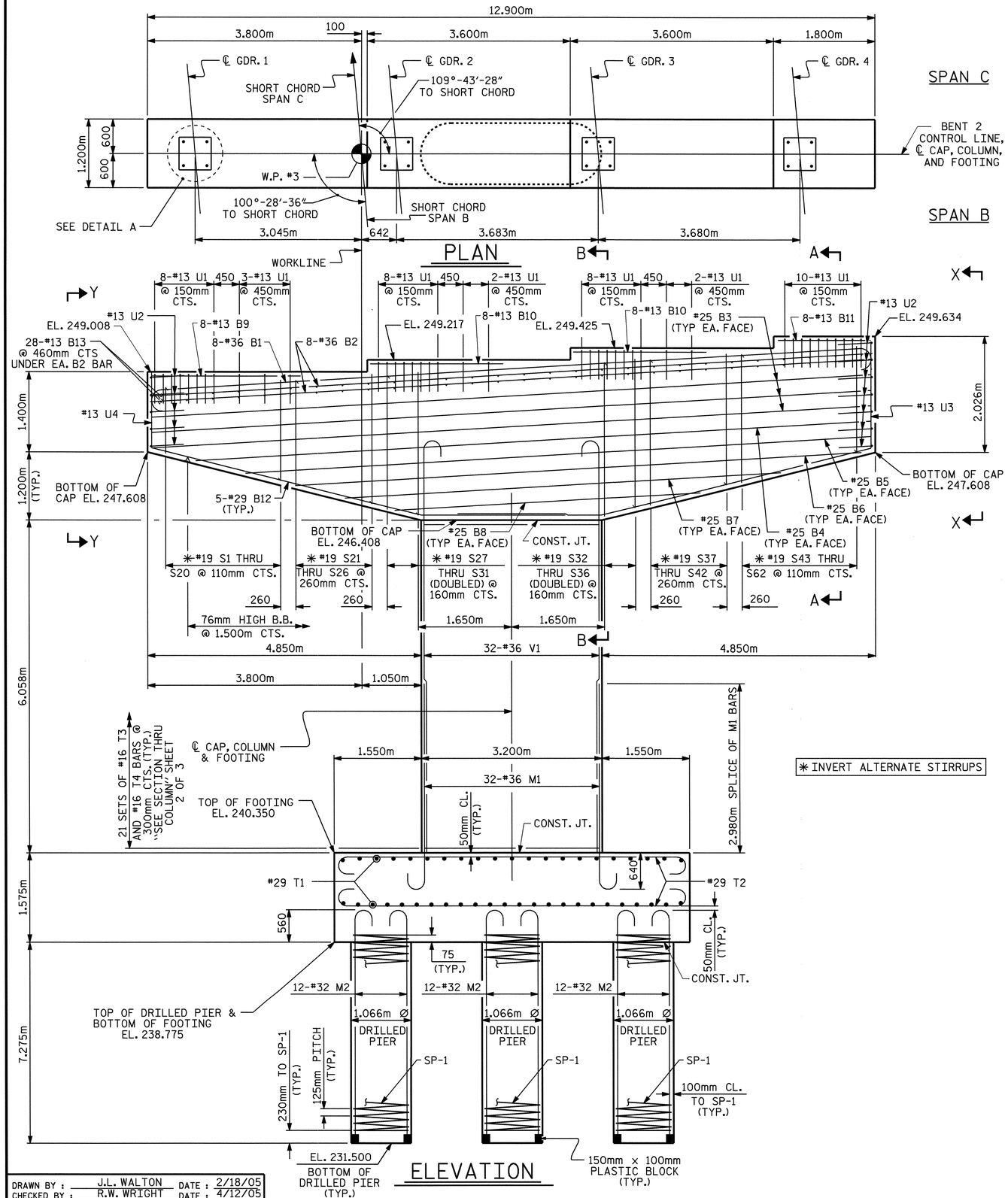

✳ INVERT ALTERNATE STIRRUPS

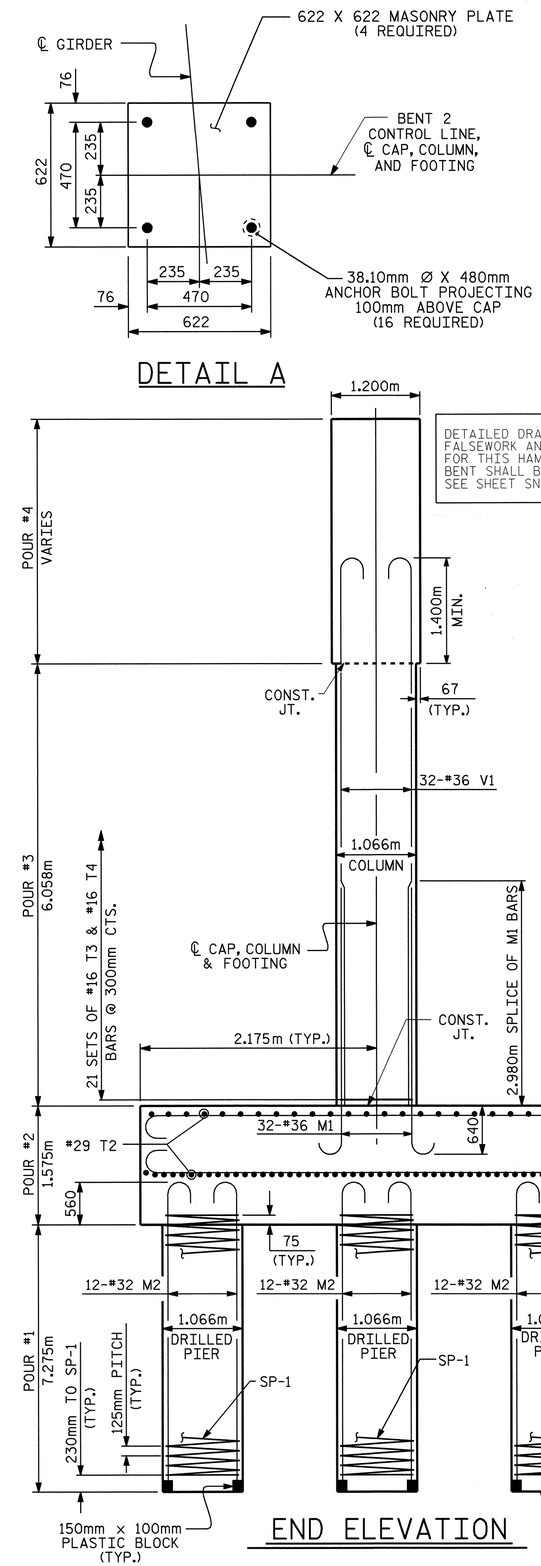

DETAILED DRAWINGS FOR FALSEWORK AND FORMS FOR THIS HAMMERHEAD BENT SHALL BE SUBMITTED. SEE SHEET SNSM.

NOTES

STIRRUPS IN CAP MAY BE SHIFTED AS NECESSARY TO CLEAR ANCHOR BOLTS.

HOOKS ON "V" BARS MAY BE TURNED AS NECESSARY FOR PLACING REINFORCING STEEL.

ALL STEEL IN THE DRILLED PIERS IS INCLUDED IN THE PAY ITEMS FOR "REINFORCING STEEL" AND "SPIRAL COLUMN REINFORCING STEEL".

THE CONTRACTOR'S ATTENTION IS CALLED TO THE FACT THAT THE LONGITUDINAL REINFORCEMENT FOR THE DRILLED PIERS IS DETAILED WITH ONE METER OF EXTRA LENGTH.

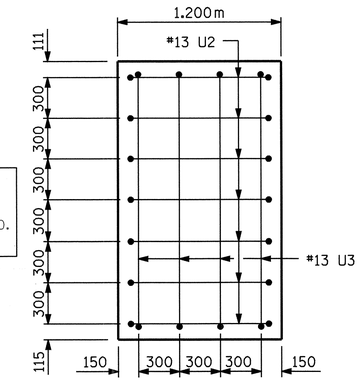

END VIEW X-X

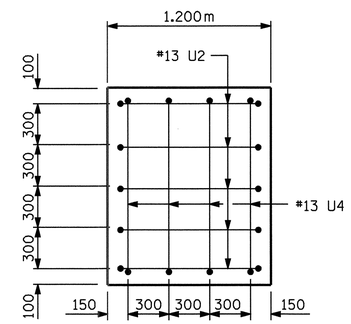

END VIEW Y-Y

NORTH CAROLINA PROFESSIONAL SEAL 23926 ENGINEER BRIAN C. HANKS 3/22/06

PROJECT NO. R-0609IA

GUILFORD COUNTY

STATION: 19+26.763 -FLY-

SHEET 1 OF 3

STATE OF NORTH CAROLINA
DEPARTMENT OF TRANSPORTATION
RALEIGH

SUBSTRUCTURE
BENT 2

REVISIONS						SHEET NO.
NO.	BY:	DATE:	NO.	BY:	DATE:	S-308
1			3			TOTAL SHEETS
2			4			321

DRAWN BY : J.L. WALTON DATE : 2/18/05
CHECKED BY : R.W. WRIGHT DATE : 4/12/05

15-MAY-2006 11:35
J:\STRUCT~1\frye\FINAL_~1\Str9\R-0609IA_sd_B*_09.dgn
rwwright

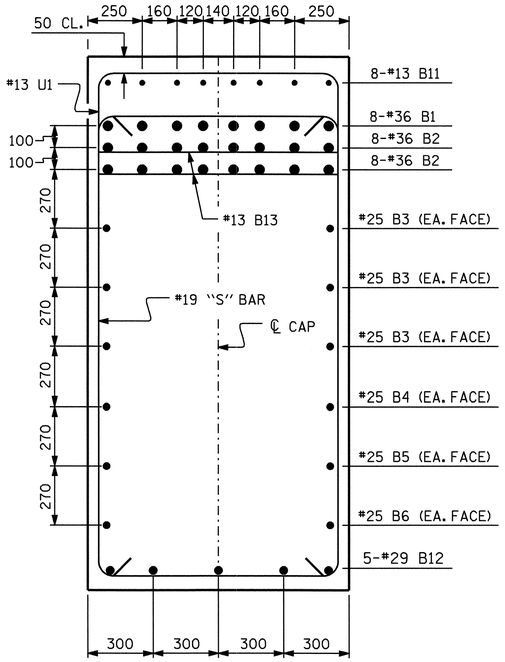

SECTION A-A

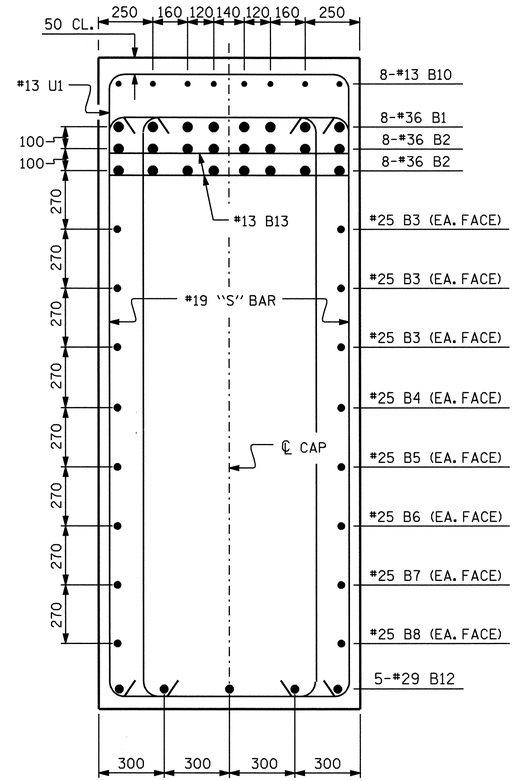

SECTION B-B

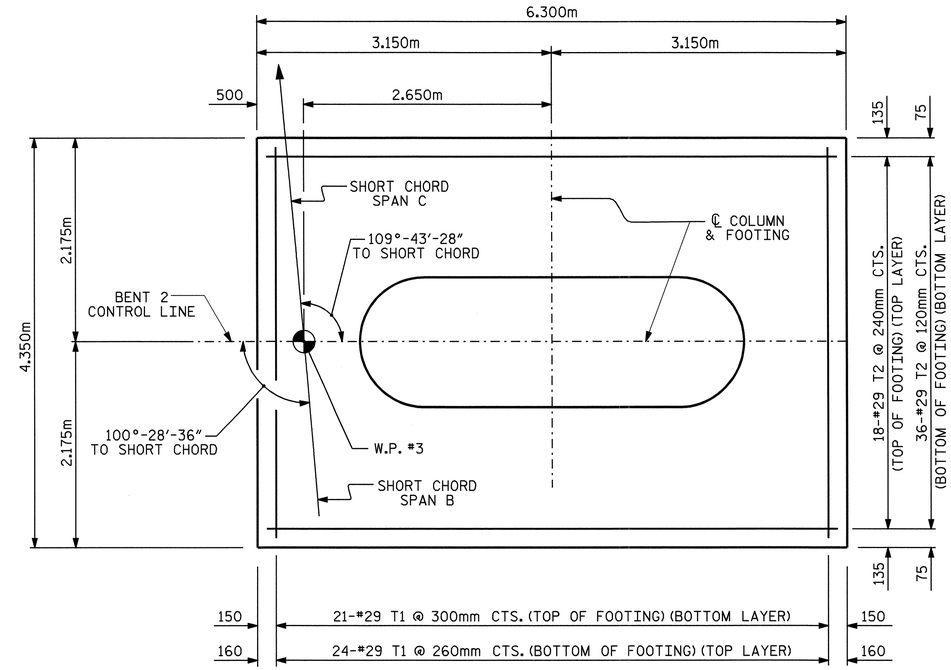

PLAN OF FOOTING

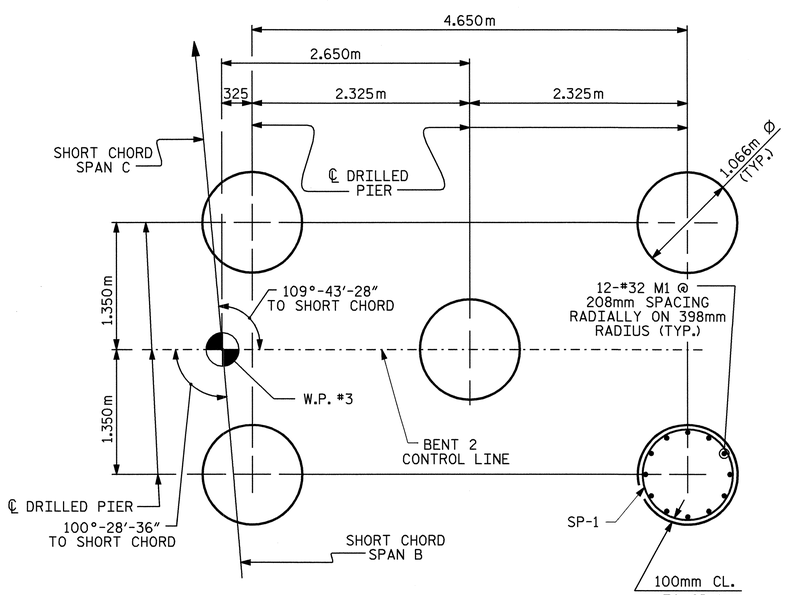

PLAN OF DRILLED PIERS

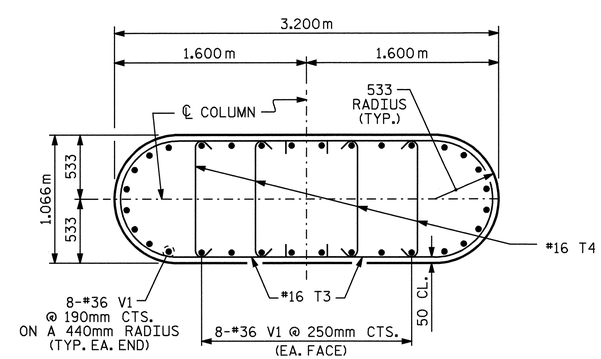

SECTION THRU COLUMN

(M1 BARS TO MATCH V1 BARS IN COLUMN)

PROJECT NO. R-0609IA
GUILFORD COUNTY
STATION: 19+26.763 -FLY-

SHEET 2 OF 3

STATE OF NORTH CAROLINA
DEPARTMENT OF TRANSPORTATION
RALEIGH

SUBSTRUCTURE
BENT 2

NORTH CAROLINA PROFESSIONAL SEAL 23926 ENGINEER BRIAN C. HANNS
5/22/06

REVISIONS						
NO.	BY:	DATE:	NO.	BY:	DATE:	
1			3			
2			4			

SHEET NO. S-309
TOTAL SHEETS 321

DRAWN BY : J.L. WALTON DATE : 2/18/05
CHECKED BY : R.W. WRIGHT DATE : 4/12/05

15-MAY-2006 11:35
J:\STRUCT~1\frye\FINAL_~1\Str9\R-0609IA_sd_B#_09.dgn
rwwright

STR. #9

BAR TYPES

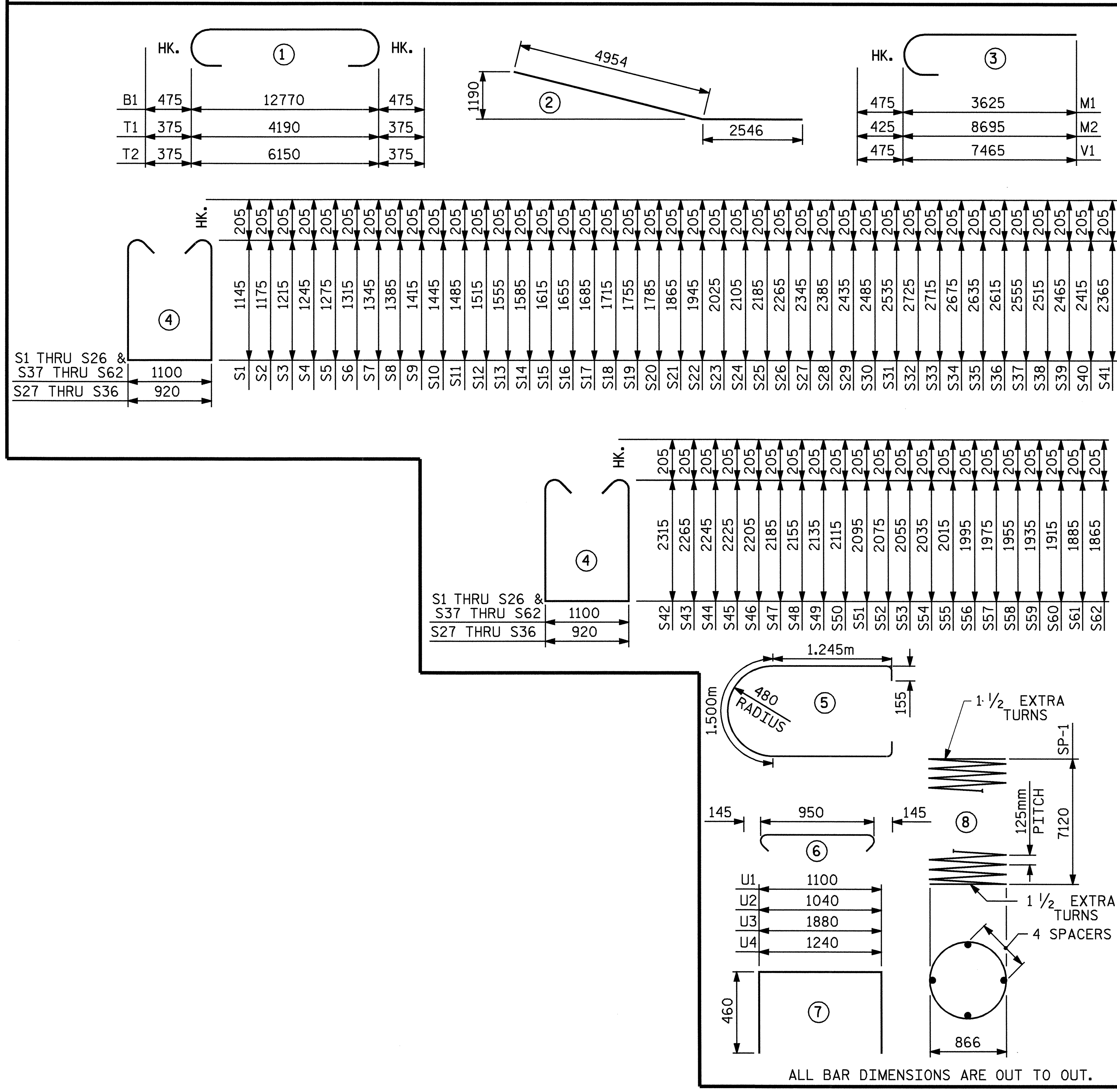

BILL OF MATERIAL BENT 2

BAR	NO.	SIZE	TYPE	LENGTH	WEIGHT
B1	8	#36	1	13720	868
B2	16	#36	STR	12820	1622
B3	6	#25	STR	12820	306
B4	2	#25	STR	12040	96
B5	2	#25	STR	11160	89
B6	2	#25	STR	10120	80
B7	2	#25	STR	7800	62
B8	2	#25	STR	5500	44
B9	8	#13	STR	2640	21
B10	16	#13	STR	2360	38
B11	8	#13	STR	1540	12
B12	10	#29	2	7500	379
B13	56	#13	STR	1100	61
M1	32	#36	3	4100	1037
M2	60	#32	3	9120	3505
S1	1	#19	4	3800	8
S2	1	#19	4	3860	9
S3	1	#19	4	3940	9
S4	1	#19	4	4000	9
S5	1	#19	4	4060	9
S6	1	#19	4	4140	9
S7	1	#19	4	4200	9
S8	1	#19	4	4280	10
S9	1	#19	4	4340	10
S10	1	#19	4	4400	10
S11	1	#19	4	4480	10
S12	1	#19	4	4540	10
S13	1	#19	4	4620	10
S14	1	#19	4	4680	10
S15	1	#19	4	4740	11
S16	1	#19	4	4820	11
S17	1	#19	4	4880	11
S18	1	#19	4	4940	11
S19	1	#19	4	5020	11
S20	1	#19	4	5080	11
S21	1	#19	4	5240	12
S22	1	#19	4	5400	12
S23	1	#19	4	5560	12
S24	1	#19	4	5720	13
S25	1	#19	4	5880	13
S26	1	#19	4	6040	13
S27	2	#19	4	6020	27
S28	2	#19	4	6100	27
S29	2	#19	4	6200	28
S30	2	#19	4	6300	28
S31	2	#19	4	6400	29
S32	2	#19	4	6780	30
S33	2	#19	4	6760	30
S34	2	#19	4	6680	30
S35	2	#19	4	6600	30
S36	2	#19	4	6560	29
S37	1	#19	4	6620	15
S38	1	#19	4	6540	15
S39	1	#19	4	6440	14
S40	1	#19	4	6340	14
S41	1	#19	4	6240	14
S42	1	#19	4	6140	14
S43	1	#19	4	6040	13
S44	1	#19	4	6000	13
S45	1	#19	4	5960	13
S46	1	#19	4	5920	13
S47	1	#19	4	5880	13
S48	1	#19	4	5820	13
S49	1	#19	4	5780	13
S50	1	#19	4	5740	13
S51	1	#19	4	5700	13
S52	1	#19	4	5660	13
S53	1	#19	4	5620	13
S54	1	#19	4	5580	12

BAR	NO.	SIZE	TYPE	LENGTH	WEIGHT
S55	1	#19	4	5540	12
S56	1	#19	4	5500	12
S57	1	#19	4	5460	12
S58	1	#19	4	5420	12
S59	1	#19	4	5380	12
S60	1	#19	4	5340	12
S61	1	#19	4	5280	12
S62	1	#19	4	5240	12
T1	45	#29	1	4940	1125
T2	54	#29	1	6900	1885
T3	42	#16	5	4300	280
T4	84	#16	6	1240	162
U1	41	#13	7	2020	82
U2	12	#13	7	1960	23
U3	4	#13	7	2800	11
U4	4	#13	7	2160	9
V1	32	#36	3	7940	2009
REINFORCING STEEL				KG.	14704
SP-1	5	⁂	8	160420	1245
SPIRAL COLUMN REINFORCING STEEL				KG.	1245

CLASS "A" CONCRETE		
POUR #2 (FOOTING)	M3	43.2
POUR #3 (COLUMN)	M3	19.2
POUR #4 (CAP)	M3	37.4
TOTAL CONCRETE	M3	99.8

DRILLED PIER QUANTITIES

DRILLED PIER CONCRETE		
POUR #1 (DRILLED PIERS)	M3	32.5
1066mm Ø DRILLED PIER IN SOIL	METERS	13.4
1066mm Ø DRILLED PIER NOT IN SOIL	METERS	23.0
CROSSHOLE SONIC LOGGING	EA.	1
CSL TUBES	METERS	160.7
SID INSPECTIONS	EA.	1

⁂ THE SP-1 SPIRAL REINFORCING STEEL SHALL BE W31 OR D-31 COLD DRAWN WIRE OR #16 PLAIN OR DEFORMED BAR.

FOUNDATION EXCAVATION LUMP SUM

PROJECT NO. R-0609IA
GUILFORD COUNTY
STATION: 19+26.763 -FLY-

SHEET 3 OF 3

STATE OF NORTH CAROLINA
DEPARTMENT OF TRANSPORTATION
RALEIGH

SUBSTRUCTURE
BENT 2

NORTH CAROLINA PROFESSIONAL SEAL 23926 ENGINEER BRIAN C. HANKS
5/22/06

REVISIONS					
NO.	BY:	DATE:	NO.	BY:	DATE:
1			3		
2			4		

SHEET NO. S-310
TOTAL SHEETS 321

DRAWN BY : J.L. WALTON DATE : 2/18/05
CHECKED BY : R.W. WRIGHT DATE : 4/12/05

15-MAY-2006 11:35
J:\STRUCT~1\frye\FINAL_~1\Str9\R-0609IA_sd_B#_09.dgn
rwwright

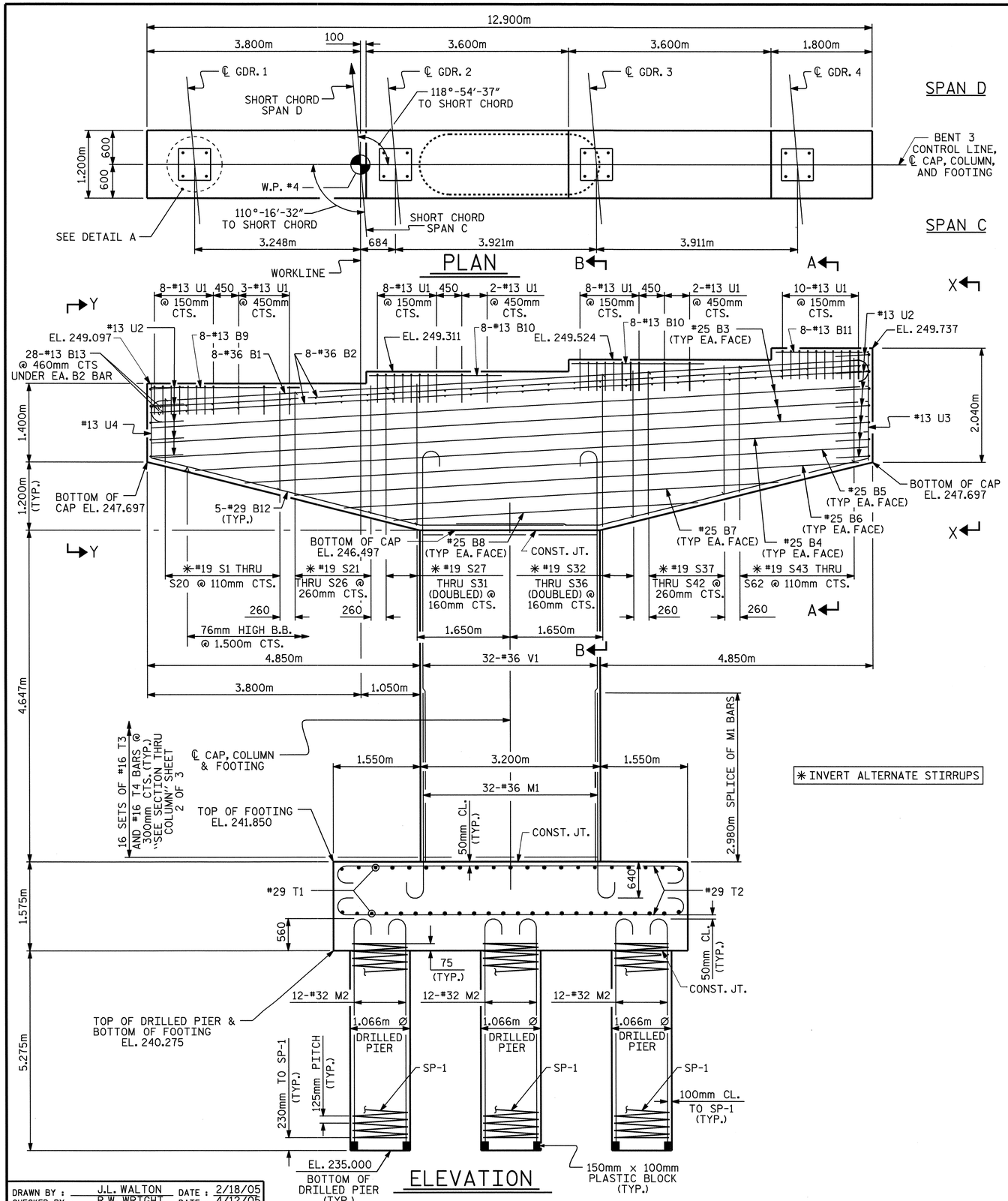

✳ INVERT ALTERNATE STIRRUPS

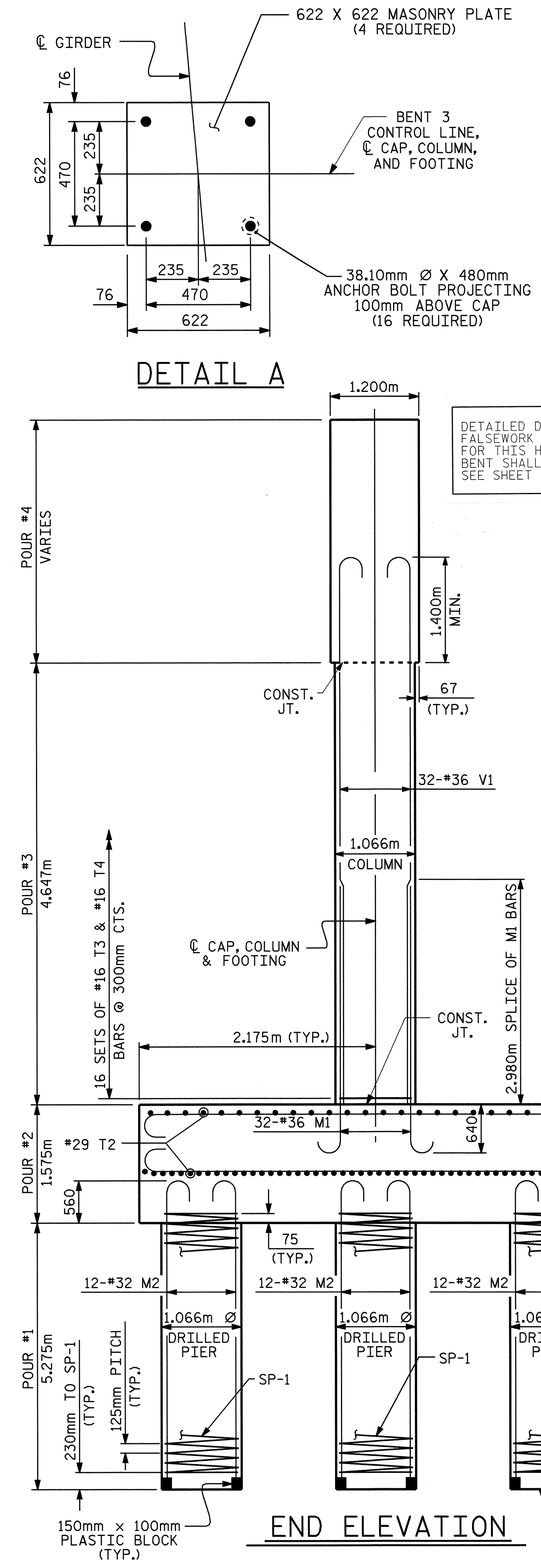

DETAILED DRAWINGS FOR FALSEWORK AND FORMS FOR THIS HAMMERHEAD BENT SHALL BE SUBMITTED. SEE SHEET SNSM.

NOTES

STIRRUPS IN CAP MAY BE SHIFTED AS NECESSARY TO CLEAR ANCHOR BOLTS.

HOOKS ON "V" BARS MAY BE TURNED AS NECESSARY FOR PLACING REINFORCING STEEL.

ALL STEEL IN THE DRILLED PIERS IS INCLUDED IN THE PAY ITEMS FOR "REINFORCING STEEL" AND "SPIRAL COLUMN REINFORCING STEEL".

THE CONTRACTOR'S ATTENTION IS CALLED TO THE FACT THAT THE LONGITUDINAL REINFORCEMENT FOR THE DRILLED PIERS IS DETAILED WITH ONE METER OF EXTRA LENGTH.

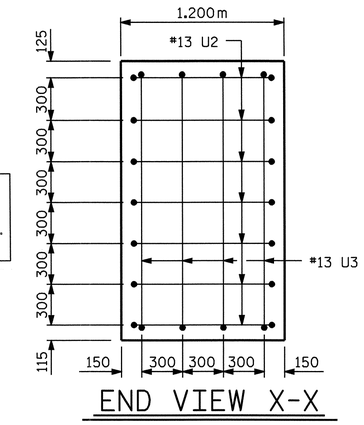

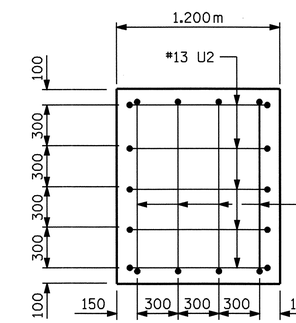

NORTH CAROLINA PROFESSIONAL SEAL 23926 ENGINEER BRIAN C. HAWKS 3/29/06

PROJECT NO. R-0609IA
GUILFORD COUNTY
STATION: 19+26.763 -FLY-

SHEET 1 OF 3

STATE OF NORTH CAROLINA
DEPARTMENT OF TRANSPORTATION
RALEIGH

SUBSTRUCTURE
BENT 3

REVISIONS								SHEET NO.
NO.	BY:	DATE:	NO.	BY:	DATE:			S-311
1			3					TOTAL SHEETS
2			4					321

DRAWN BY : J.L. WALTON DATE : 2/18/05
CHECKED BY : R.W. WRIGHT DATE : 4/12/05

15-MAY-2006 11:35
J:\STRUCT~1\frye\FINAL_~1\Str9\R-0609IA_sd_B*_09.dgn
rwwright

STR #9

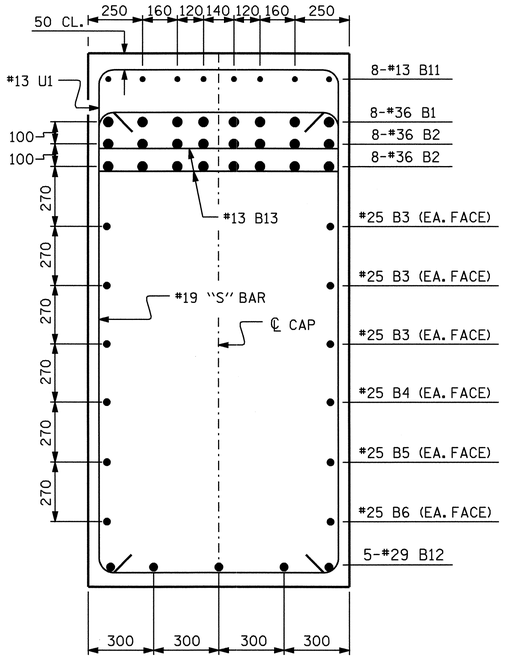

SECTION A-A

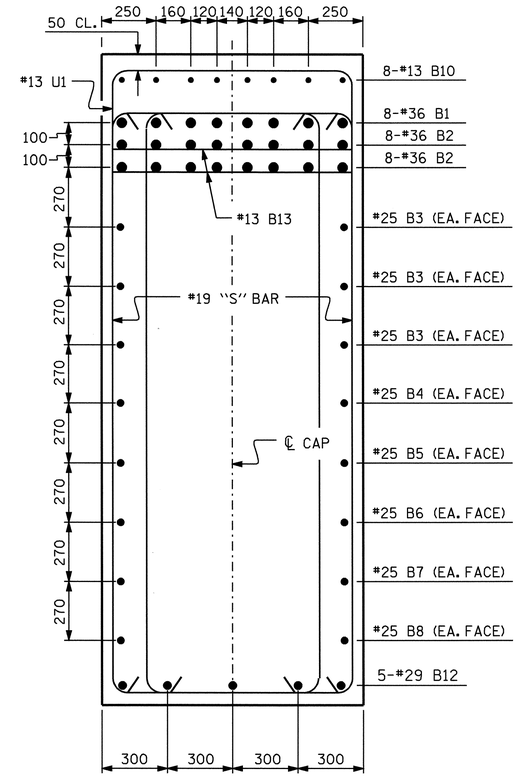

SECTION B-B

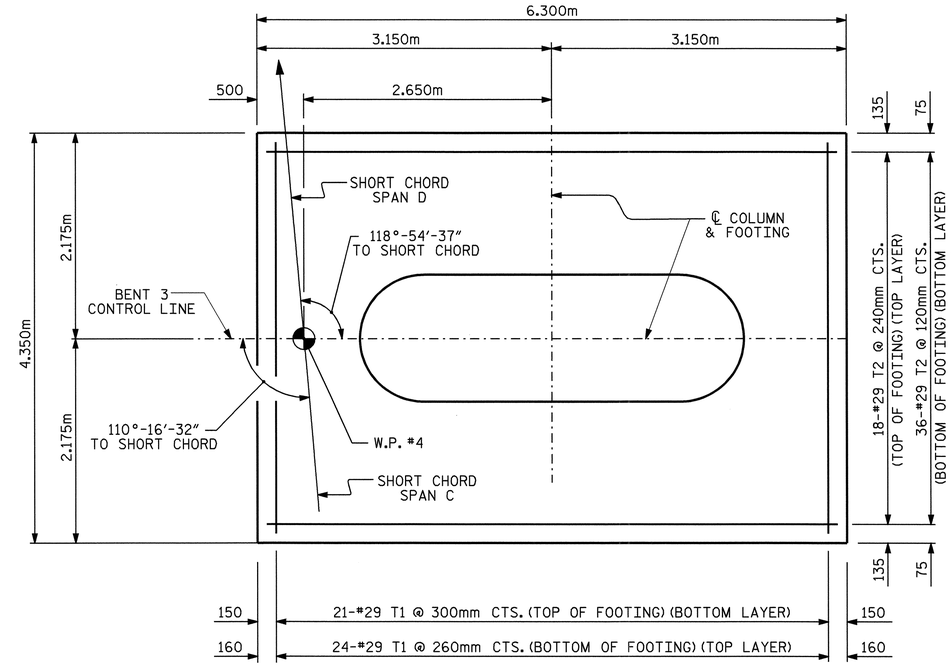

PLAN OF FOOTING

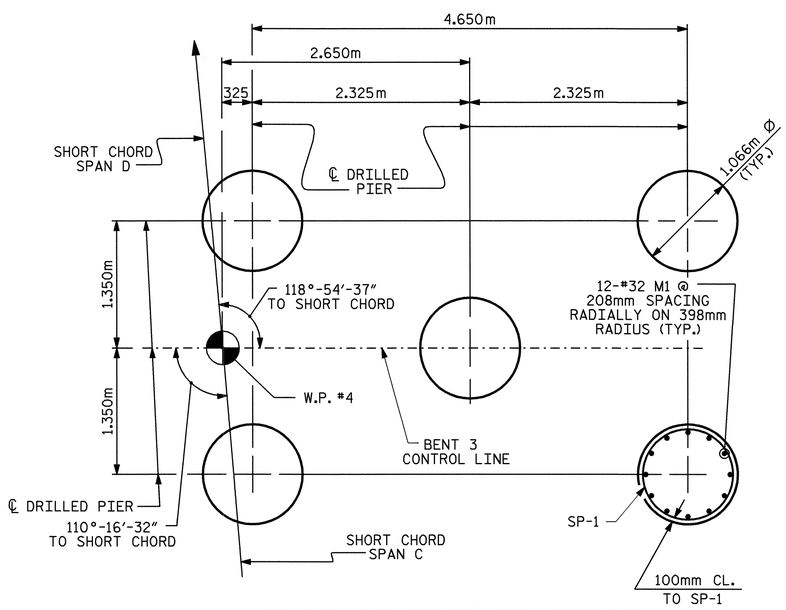

PLAN OF DRILLED PIERS

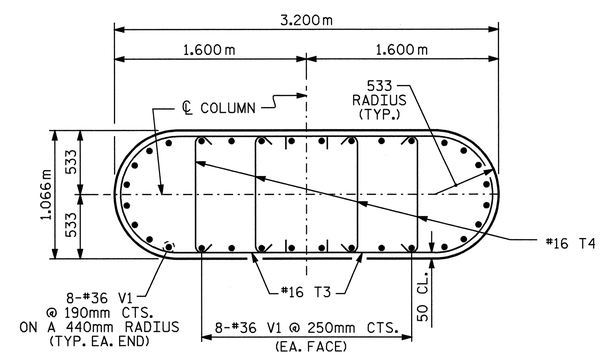

SECTION THRU COLUMN

(M1 BARS TO MATCH V1 BARS IN COLUMN)

PROJECT NO. R-0609IA
GUILFORD COUNTY
STATION: 19+26.763 -FLY-

SHEET 2 OF 3

STATE OF NORTH CAROLINA
DEPARTMENT OF TRANSPORTATION
RALEIGH

SUBSTRUCTURE
BENT 3

NORTH CAROLINA PROFESSIONAL SEAL 23926 ENGINEER BRIAN C. HAWKS
5/22/06

REVISIONS						SHEET NO.
NO.	BY:	DATE:	NO.	BY:	DATE:	S-312
1			3			TOTAL SHEETS
2			4			321

DRAWN BY : J.L. WALTON DATE : 2/18/05
CHECKED BY : R.W. WRIGHT DATE : 4/12/05

15-MAY-2006 11:35
J:\STRUCT~1\frye\FINAL_~1\Str9\R-0609IA_sd_B*_09.dgn
rwwright

STR. #9

BAR TYPES

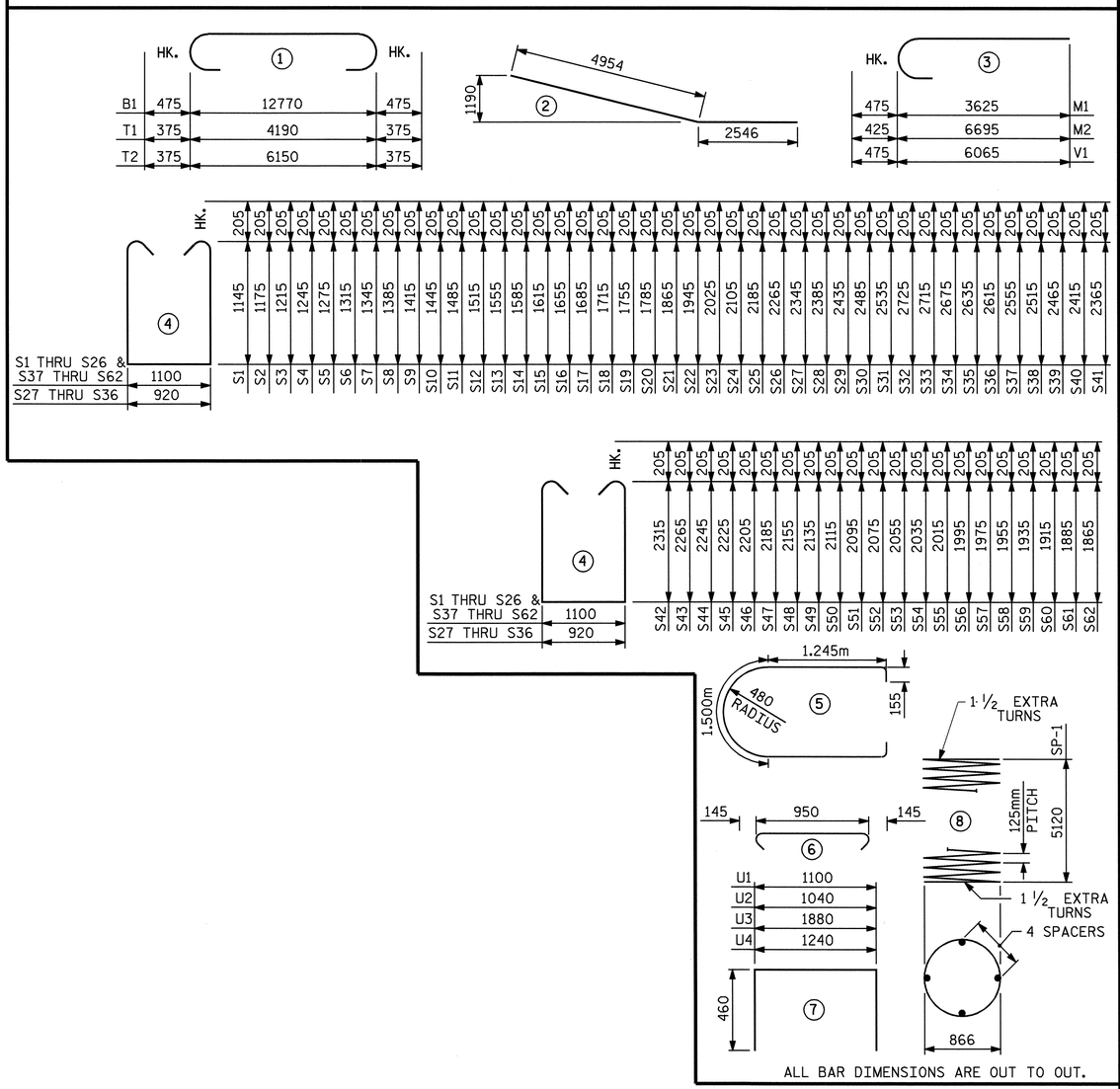

ALL BAR DIMENSIONS ARE OUT TO OUT.

BILL OF MATERIAL BENT 3

BAR	NO.	SIZE	TYPE	LENGTH	WEIGHT
B1	8	#36	1	13720	868
B2	16	#36	STR	12820	1622
B3	6	#25	STR	12820	306
B4	2	#25	STR	12040	96
B5	2	#25	STR	11160	89
B6	2	#25	STR	10120	80
B7	2	#25	STR	7800	62
B8	2	#25	STR	5500	44
B9	8	#13	STR	2640	21
B10	16	#13	STR	2360	38
B11	8	#13	STR	1540	12
B12	10	#29	2	7500	379
B13	56	#13	STR	1100	61
M1	32	#36	3	4100	1037
M2	60	#32	3	7120	2737
S1	1	#19	4	3800	8
S2	1	#19	4	3860	9
S3	1	#19	4	3940	9
S4	1	#19	4	4000	9
S5	1	#19	4	4060	9
S6	1	#19	4	4140	9
S7	1	#19	4	4200	9
S8	1	#19	4	4280	10
S9	1	#19	4	4340	10
S10	1	#19	4	4400	10
S11	1	#19	4	4480	10
S12	1	#19	4	4540	10
S13	1	#19	4	4620	10
S14	1	#19	4	4680	10
S15	1	#19	4	4740	11
S16	1	#19	4	4820	11
S17	1	#19	4	4880	11
S18	1	#19	4	4940	11
S19	1	#19	4	5020	11
S20	1	#19	4	5080	11
S21	1	#19	4	5240	12
S22	1	#19	4	5400	12
S23	1	#19	4	5560	12
S24	1	#19	4	5720	13
S25	1	#19	4	5880	13
S26	1	#19	4	6040	13
S27	2	#19	4	6020	27
S28	2	#19	4	6100	27
S29	2	#19	4	6200	28
S30	2	#19	4	6300	28
S31	2	#19	4	6400	29
S32	2	#19	4	6780	30
S33	2	#19	4	6760	30
S34	2	#19	4	6680	30
S35	2	#19	4	6600	30
S36	2	#19	4	6560	29
S37	1	#19	4	6620	15
S38	1	#19	4	6540	15
S39	1	#19	4	6440	14
S40	1	#19	4	6340	14
S41	1	#19	4	6240	14
S42	1	#19	4	6140	14
S43	1	#19	4	6040	13
S44	1	#19	4	6000	13
S45	1	#19	4	5960	13
S46	1	#19	4	5920	13
S47	1	#19	4	5880	13
S48	1	#19	4	5820	13
S49	1	#19	4	5780	13
S50	1	#19	4	5740	13
S51	1	#19	4	5700	13
S52	1	#19	4	5660	13
S53	1	#19	4	5620	13
S54	1	#19	4	5580	12

BAR	NO.	SIZE	TYPE	LENGTH	WEIGHT
S55	1	#19	4	5540	12
S56	1	#19	4	5500	12
S57	1	#19	4	5460	12
S58	1	#19	4	5420	12
S59	1	#19	4	5380	12
S60	1	#19	4	5340	12
S61	1	#19	4	5280	12
S62	1	#19	4	5240	12
T1	45	#29	1	4940	1125
T2	54	#29	1	6900	1885
T3	32	#16	5	4300	214
T4	64	#16	6	1240	123
U1	41	#13	7	2020	82
U2	12	#13	7	1960	23
U3	4	#13	7	2800	11
U4	4	#13	7	2160	9
V1	32	#36	3	6540	1655

REINFORCING STEEL	KG.	13477
SP-1 5 ✱✱ 8 117640		913
SPIRAL COLUMN REINFORCING STEEL	KG.	913

CLASS "A" CONCRETE		
POUR #2 (FOOTING)	M3	43.2
POUR #3 (COLUMN)	M3	14.7
POUR #4 (CAP)	M3	37.4
TOTAL CONCRETE	M3	95.3

DRILLED PIER QUANTITIES

DRILLED PIER CONCRETE		
POUR #1 (DRILLED PIERS)	M3	23.5
1066mm Ø DRILLED PIER IN SOIL	METERS	6.4
1066mm Ø DRILLED PIER NOT IN SOIL	METERS	20.0
CSL TUBES	METERS	120.7

✱✱ THE SP-1 SPIRAL REINFORCING STEEL SHALL BE W31 OR D-31 COLD DRAWN WIRE OR #16 PLAIN OR DEFORMED BAR.

FOUNDATION EXCAVATION	LUMP SUM

PROJECT NO. R-0609IA
GUILFORD COUNTY
STATION: 19+26.763 -FLY-

SHEET 3 OF 3

STATE OF NORTH CAROLINA
DEPARTMENT OF TRANSPORTATION
RALEIGH

SUBSTRUCTURE
BENT 3

NORTH CAROLINA PROFESSIONAL SEAL 23926 ENGINEER BRIAN C. HAINES
5/22/06

REVISIONS								SHEET NO.
NO.	BY:	DATE:	NO.	BY:	DATE:			S-313
1			3					TOTAL SHEETS
2			4					321

DRAWN BY : J.L. WALTON DATE : 2/18/05
CHECKED BY : R.W. WRIGHT DATE : 4/12/05

15-MAY-2006 11:35
J:\STRUCT~1\frye\FINAL_~1\Str9\R-0609IA_sd_B*_09.dgn
rwwright

STR. #9

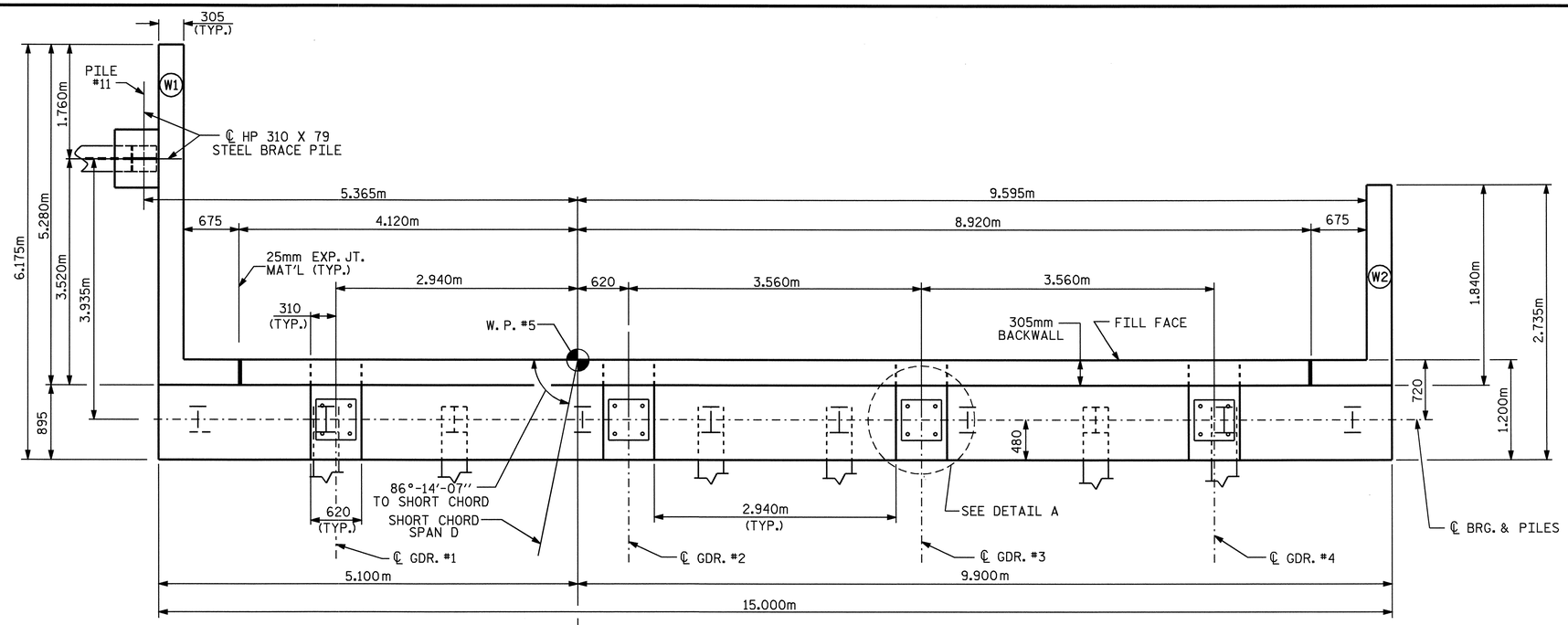

PLAN

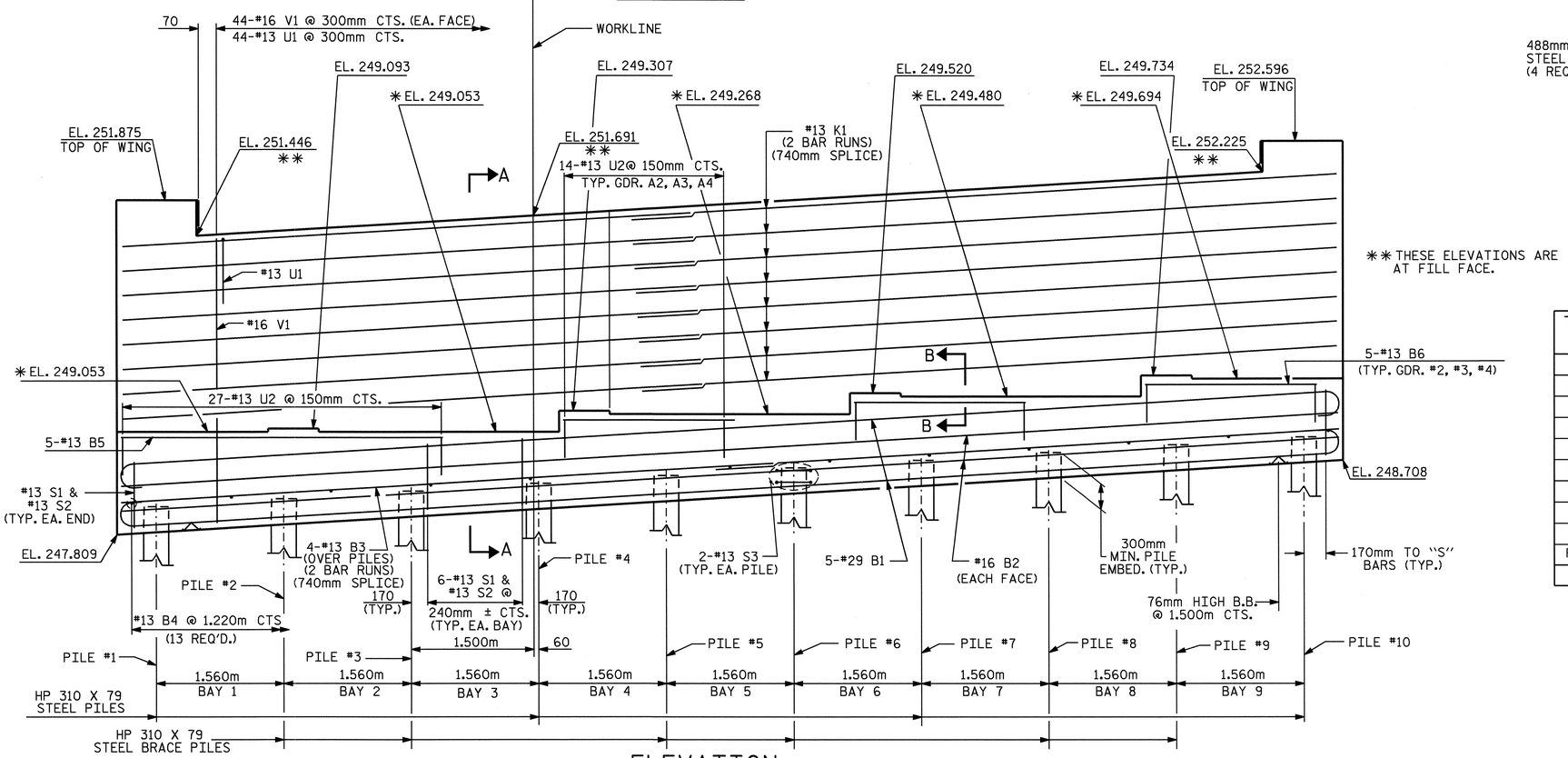

ELEVATION

WINGS AND WING BRACE PILE NOT SHOWN FOR CLARITY.

NOTES

STIRRUPS IN CAP MAY BE SHIFTED AS NECESSARY TO CLEAR ANCHOR BOLTS.

FOR PILE SPLICE DETAILS, SEE SHEET 3 OF 3.

BACKWALL SHALL BE PLACED BEFORE APPLYING THE EPOXY PROTECTIVE COATING.

THE TOP SURFACE AREAS OF THE END BENT CAPS SHALL BE CURED IN ACCORDANCE WITH THE STANDARD SPECIFICATIONS EXCEPT THE MEMBRANE CURING COMPOUND METHOD SHALL NOT BE USED.

✳ THE TOP SURFACE OF THE CAP EXCEPT THE BRIDGE SEAT BUILDUPS SHALL BE SLOPED TRANSVERSELY FROM THE FILL FACE TO THE BACK FACE AT THE RATE OF 2 %.

FOR TEMPORARY DRAINAGE AT END BENT, SEE SHEET 3 OF 3.

THE CONTRACTOR SHALL PROVIDE FOR INSTALLATION OF THE 102mm DIAMETER DRAIN PIPE THROUGH THE WING WALL AS REQUIRED FOR REINFORCED BRIDGE APPROACH FILLS. SEE THE ROADWAY PLANS. REINFORCING STEEL IN THE WING WALL MAY BE SHIFTED AS NECESSARY TO CLEAR THE DRAIN PIPE.

FOR EPOXY PROTECTIVE COATING, SEE SPECIAL PROVISIONS.

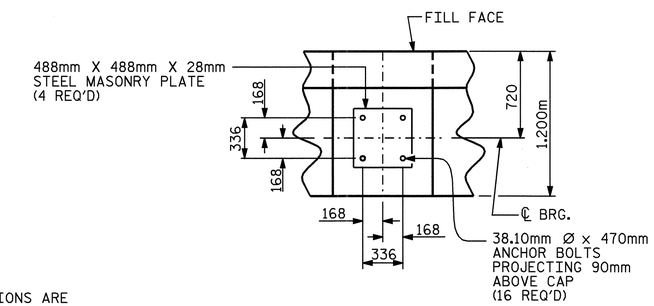

DETAIL A

(TYP. EA. GIRDER)

TOP OF PILE ELEVATIONS	
PILE #1	248.147
PILE #2	248.240
PILE #3	248.334
PILE #4	248.427
PILE #5	248.521
PILE #6	248.614
PILE #7	248.708
PILE #8	248.801
PILE #9	248.895
PILE #10	248.988
PILE #11	248.114

PROJECT NO. R-0609IA
GUILFORD COUNTY
STATION: 19+26.763 -FLY-

SHEET 1 OF 3

STATE OF NORTH CAROLINA
DEPARTMENT OF TRANSPORTATION
RALEIGH

SUBSTRUCTURE
END BENT 2

NORTH CAROLINA PROFESSIONAL SEAL 23926 ENGINEER BRIAN C. HANKS
5/22/06

REVISIONS							SHEET NO.
NO.	BY:	DATE:	NO.	BY:	DATE:		S-314
1			3				TOTAL SHEETS
2			4				321

STR.#9

DRAWN BY : QT NGUYEN DATE : 2-05
CHECKED BY : RW WRIGHT DATE : 4-05

15-MAY-2006 11:32
J:\STRUCT~1\frye\FINAL_~1\Str9\R0609IA_sd_E_09.dgn
rwwright

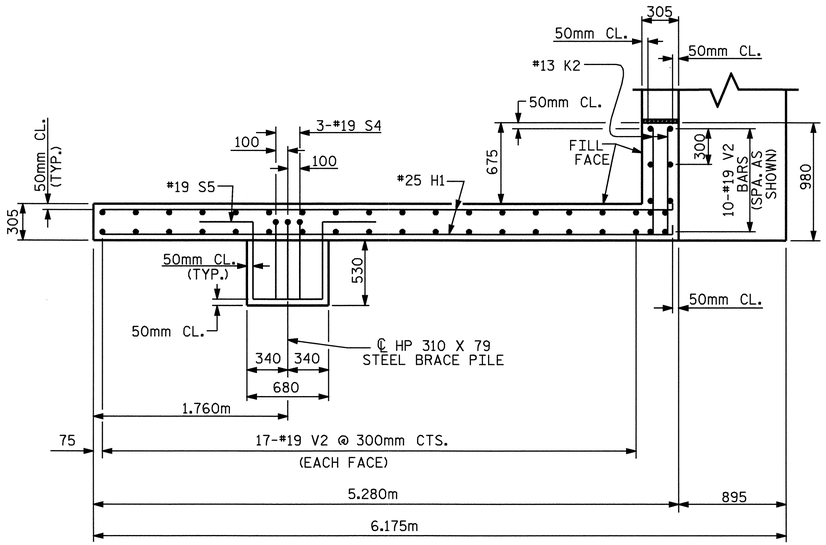

PLAN OF WING W1

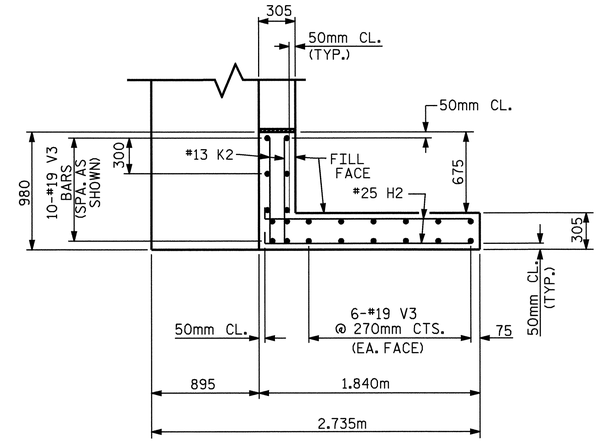

PLAN OF WING W2

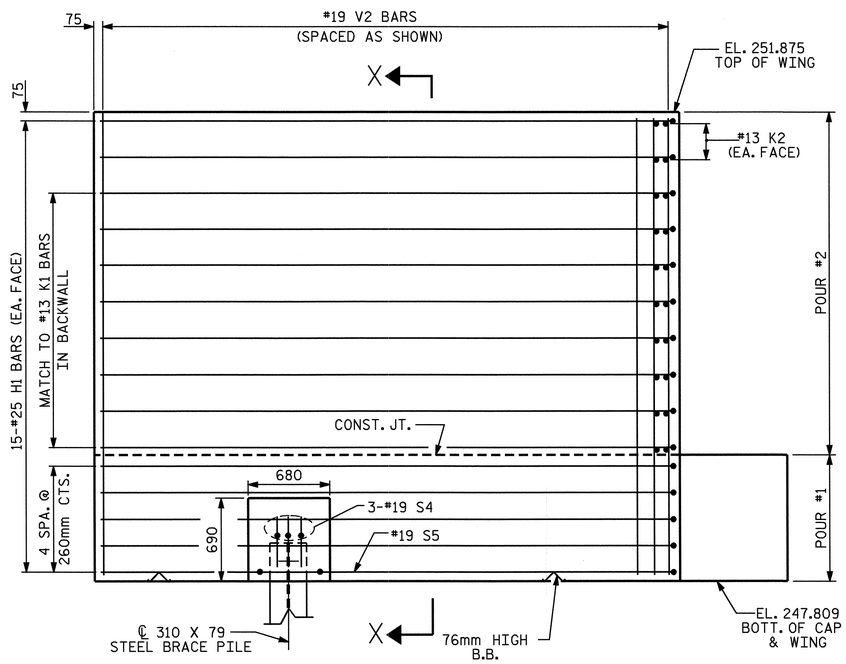

ELEVATION OF WING W1

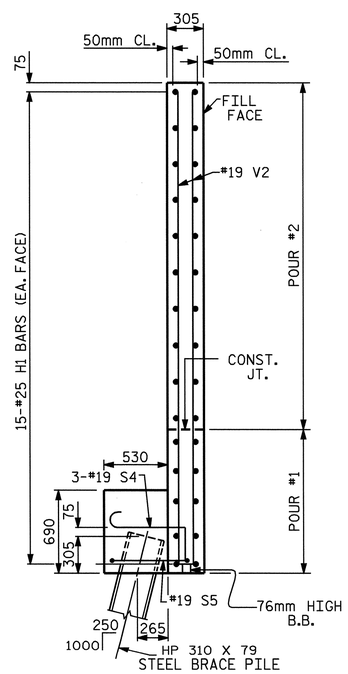

SECTION X-X

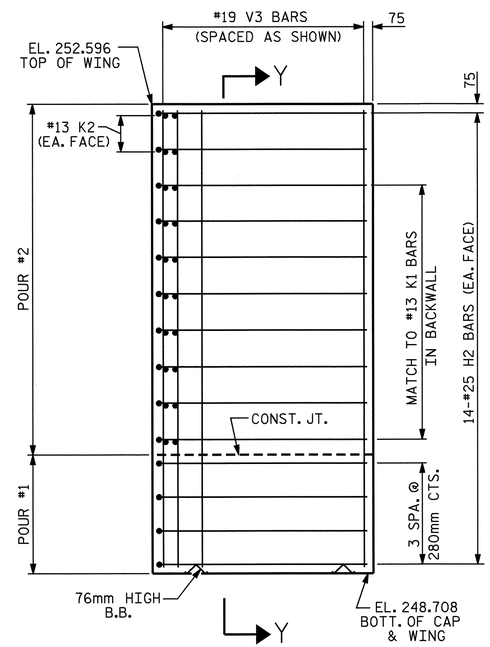

ELEVATION OF WING W2

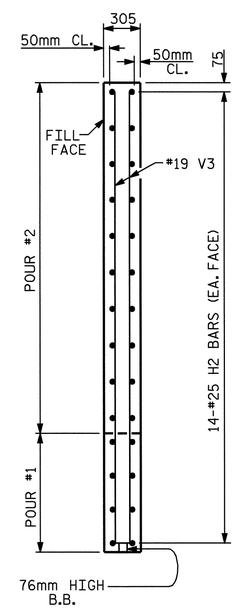

SECTION Y-Y

PROJECT NO. R-0609IA
GUILFORD COUNTY
STATION: 19+26.763 -FLY-

SHEET 2 OF 3

STATE OF NORTH CAROLINA
DEPARTMENT OF TRANSPORTATION
RALEIGH

SUBSTRUCTURE
END BENT 2

NORTH CAROLINA PROFESSIONAL SEAL 23926 ENGINEER BRIAN C. HAWKS
5/22/06

REVISIONS						SHEET NO.
NO.	BY:	DATE:	NO.	BY:	DATE:	S-315
1			3			TOTAL SHEETS
2			4			321

DRAWN BY : QT NGUYEN DATE : 2-05
CHECKED BY : RW WRIGHT DATE : 4-05

15-MAY-2006 11:32
J:\STRUCT~1\frye\FINAL_~1\Str9\R0609IA_sd_E_09.dgn
cwwright

STR. #9

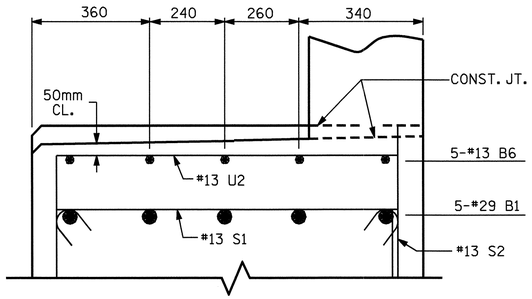

PARTIAL SECTION B-B

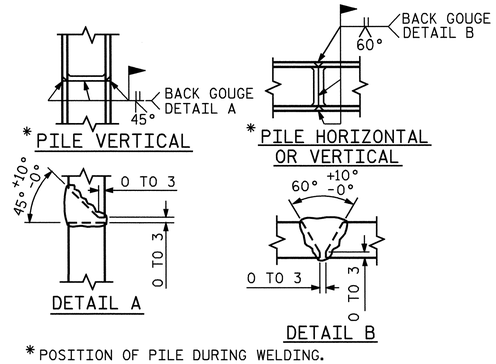

* POSITION OF PILE DURING WELDING.

PILE SPLICE DETAILS

BAR TYPES

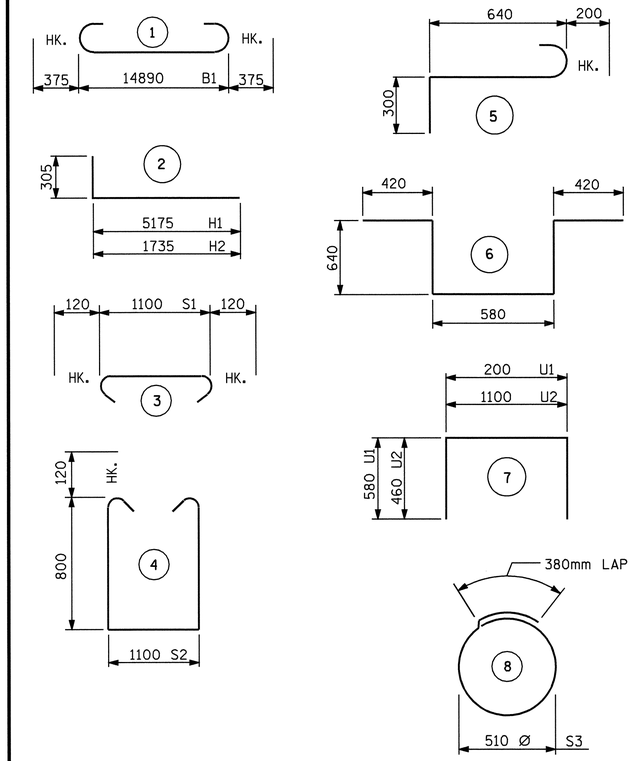

ALL BAR DIMENSIONS ARE OUT TO OUT.

BILL OF MATERIAL
END BENT 2

BAR	NO.	SIZE	TYPE	LENGTH	WEIGHT
B1	10	#29	1	15640	791
B2	4	#16	STR	14800	92
B3	8	#13	STR	7820	62
B4	13	#13	STR	1100	14
B5	5	#13	STR	3940	20
B6	15	#13	STR	2100	31
H1	30	#25	2	5480	653
H2	28	#25	2	2040	227
K1	32	#13	STR	7820	249
K2	8	#13	STR	880	7
S1	56	#13	3	1340	75
S2	56	#13	4	2940	164
S3	20	#13	8	1980	39
S4	3	#19	5	1140	8
S5	1	#19	6	2700	6
U1	44	#13	7	1360	59
U2	69	#13	7	2020	139
V1	88	#16	STR	3400	464
V2	44	#19	STR	3960	389
V3	22	#19	STR	3780	186

REINFORCING STEEL = 3674 KG

CLASS A CONCRETE BREAKDOWN

POUR #1 (CAP & LOWER WINGS)	M3	21.7
POUR #2 (BACKWALL & UPPER WINGS)	M3	17.4
TOTAL	M3	39.1

HP 310 X 79 STEEL PILES
NO 11 66 METERS

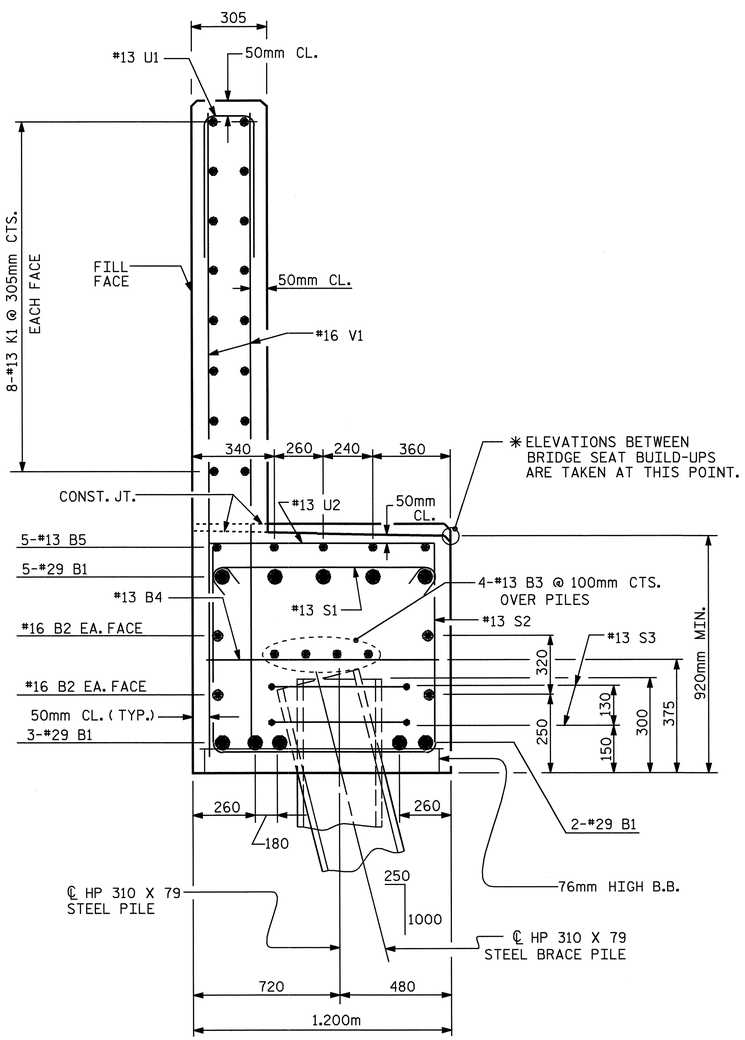

SECTION A-A

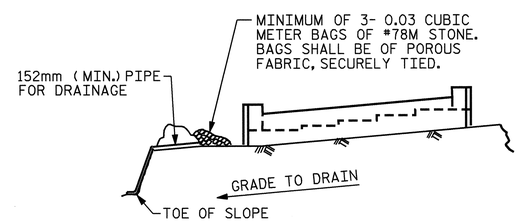

BAGGED STONE AND PIPE SHALL BE PLACED IMMEDIATELY AFTER COMPLETION OF END BENT EXCAVATION. PIPE MAY BE EITHER CONCRETE, CORRUGATED STEEL, CORRUGATED ALUMINUM ALLOY, OR CORRUGATED PLASTIC. PERFORATED PIPE WILL NOT BE ALLOWED.

BAGGED STONE SHALL REMAIN IN PLACE UNTIL THE ENGINEER DIRECTS THAT IT BE REMOVED. THE CONTRACTOR SHALL REMOVE AND DISPOSE OF SILT ACCUMULATIONS AT BAGGED STONE WHEN SO DIRECTED BY THE ENGINEER. BAGS SHALL BE REMOVED AND REPLACED WHENEVER THE ENGINEER DETERMINES THAT THEY HAVE DETERIORATED AND LOST THEIR EFFECTIVENESS.

NO SEPARATE PAYMENT WILL BE MADE FOR THIS WORK AND THE ENTIRE COST OF THIS WORK SHALL BE INCLUDED IN THE UNIT CONTRACT PRICE BID FOR THE SEVERAL PAY ITEMS.

TEMPORARY DRAINAGE AT END BENT

PROJECT NO. R-0609IA
GUILFORD COUNTY
STATION: 19+26.763 -FLY-

SHEET 3 OF 3

STATE OF NORTH CAROLINA
DEPARTMENT OF TRANSPORTATION
RALEIGH

SUBSTRUCTURE
END BENT 2

NORTH CAROLINA PROFESSIONAL SEAL 23926 ENGINEER BRIAN C. HANKS
5/22/06

REVISIONS								SHEET NO.
NO.	BY:	DATE:	NO.	BY:	DATE:			S-316
1			3					TOTAL SHEETS
2			4					321

STR. #9

DRAWN BY : QT NGUYEN DATE : 2-05
CHECKED BY : RW WRIGHT DATE : 4-05

15-MAY-2006 11:32
J:\STRUCT~1\frye\FINAL_~1\Str9\R0609IA_sd_E_09.dgn
rwwright

NOTES

SLOPE PROTECTION SHALL BE PLACED UNDER THE ENDS OF THE BRIDGE AS SHOWN IN THE DETAILS. METHOD OF MEASUREMENT AND BASIS OF PAYMENT SHALL BE AS PRESCRIBED IN SECTION 462 OF THE STANDARD SPECIFICATIONS. FOR BERM WIDTH, SEE GENERAL DRAWING.

SLOPE PROTECTION SHALL CONSIST OF 100mm POURED-IN-PLACE CONCRETE PAVING AS SHOWN IN THE DETAILS ON THIS SHEET. CONCRETE SHALL BE CLASS "B". THE CONCRETE SURFACE SHALL BE FLOATED WITH A WOODEN FLOAT AND FINISHED. WELDED WIRE FABRIC REINFORCING SHALL BE 152 X 152 - W9.1 X W9.1, 1520mm WIDE. SLOPE PROTECTION SHALL BE POURED IN 1520mm STRIPS AS SHOWN IN THE "POURING DETAIL" WITH 600mm LONG #13 BARS PLACED ALONG THE SLOPE BETWEEN STRIPS AT 450mm MAXIMUM SPACING. SLOPE PROTECTION MAY BE POURED IN ALTERNATE 1220mm AND 1520mm STRIPS AS SHOWN IN THE "OPTIONAL POURING DETAIL" WITH ADJACENT RUNS OF WELDED WIRE FABRIC LAPPING AT LEAST 152mm. THE COST OF THE WELDED WIRE FABRIC AND #13 BARS, IF USED, SHALL BE INCLUDED IN THE CONTRACT UNIT PRICE BID PER SQUARE METER FOR SLOPE PROTECTION.

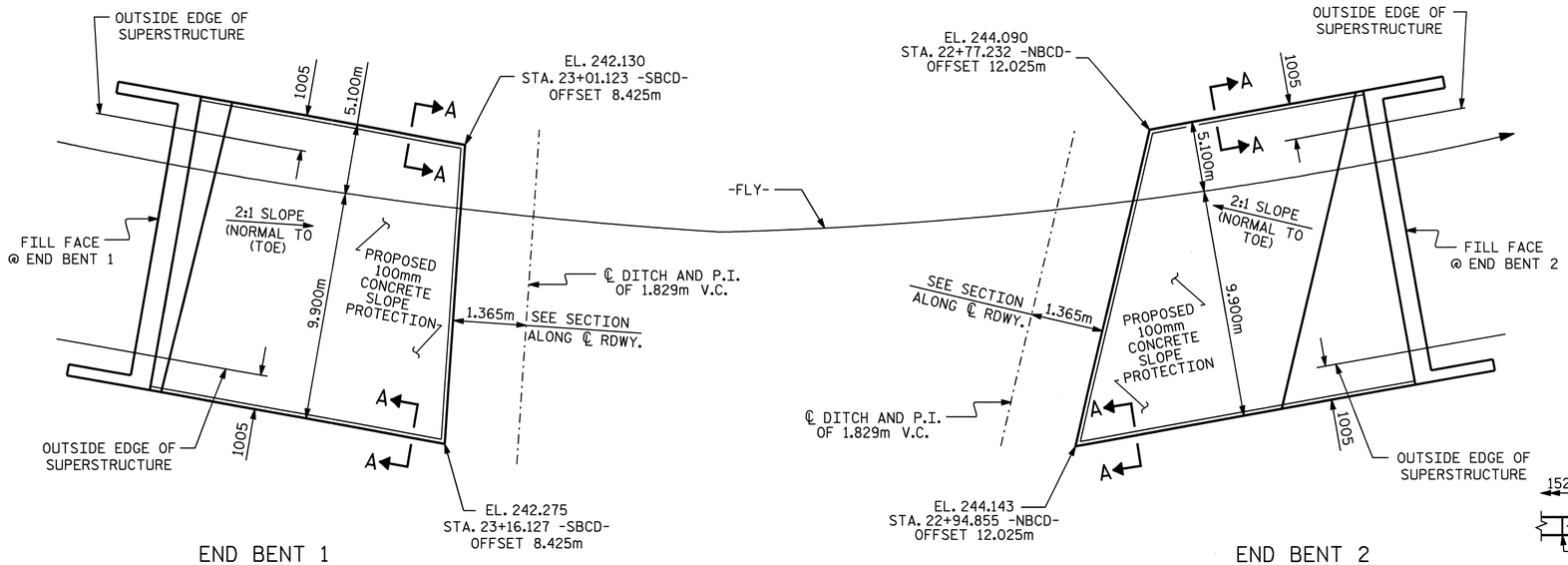

PLAN OF SLOPE PROTECTION

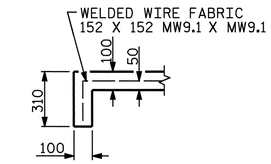

SECTION A-A

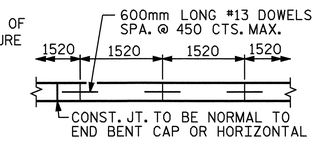

STRIP WIDTHS MAY VARY IN CURVED PORTION.

POURING DETAIL

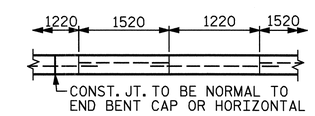

POUR A 1220mm STRIP FIRST. STRIP WIDTHS MAY VARY IN CURVED PORTION.

OPTIONAL POURING DETAIL

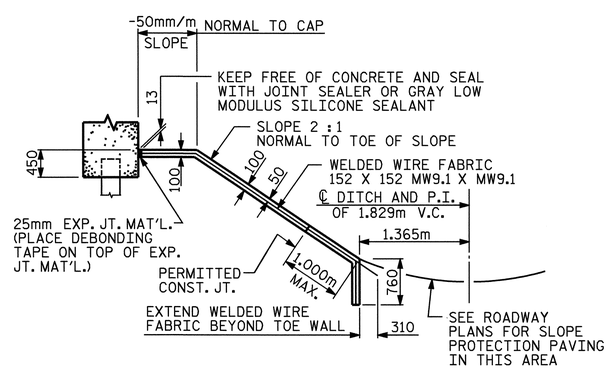

SECTION ALONG ℄ ROADWAY WHEN FILL CATCHES IN DITCH

BRIDGE @ STA. 19+26.763 -FLY-	100mm SLOPE PROTECTION	* WELDED WIRE FABRIC 1520mm WIDE
	SQUARE METERS	APPROX. METERS
END BENT 1	230	190
END BENT 2	270	220

* QUANTITY SHOWN IS BASED ON 1520mm POURS.

PROJECT NO. R-0609IA
GUILFORD COUNTY
STATION: 19+26.763 -FLY-

STATE OF NORTH CAROLINA
DEPARTMENT OF TRANSPORTATION
RALEIGH

STANDARD
SLOPE PROTECTION
DETAILS

NORTH CAROLINA PROFESSIONAL SEAL 23926 ENGINEER BRIAN C. HANKS
5/22/06

REVISIONS							SHEET NO.
NO.	BY:	DATE:	NO.	BY:	DATE:		S-317
1			3				TOTAL SHEETS
2			4				321

ASSEMBLED BY : J.L. WALTON		DATE : 10/12/04	
CHECKED BY : W.F. PARKER		DATE : 1/28/05	
DRAWN BY : ELR 5/92	REV. 10/17/00	RWW/LES	
CHECKED BY : GRP 6/92	REV. 7/10/01	LES/RDR	
	REV. 5/7/03	RWW/JTE	

15-MAY-2006 11:29
J:\STRUCT~1\frye\FINAL_~1\Str9\R-0609IA_sd_SP_09.dgn
rwwright

STR #9

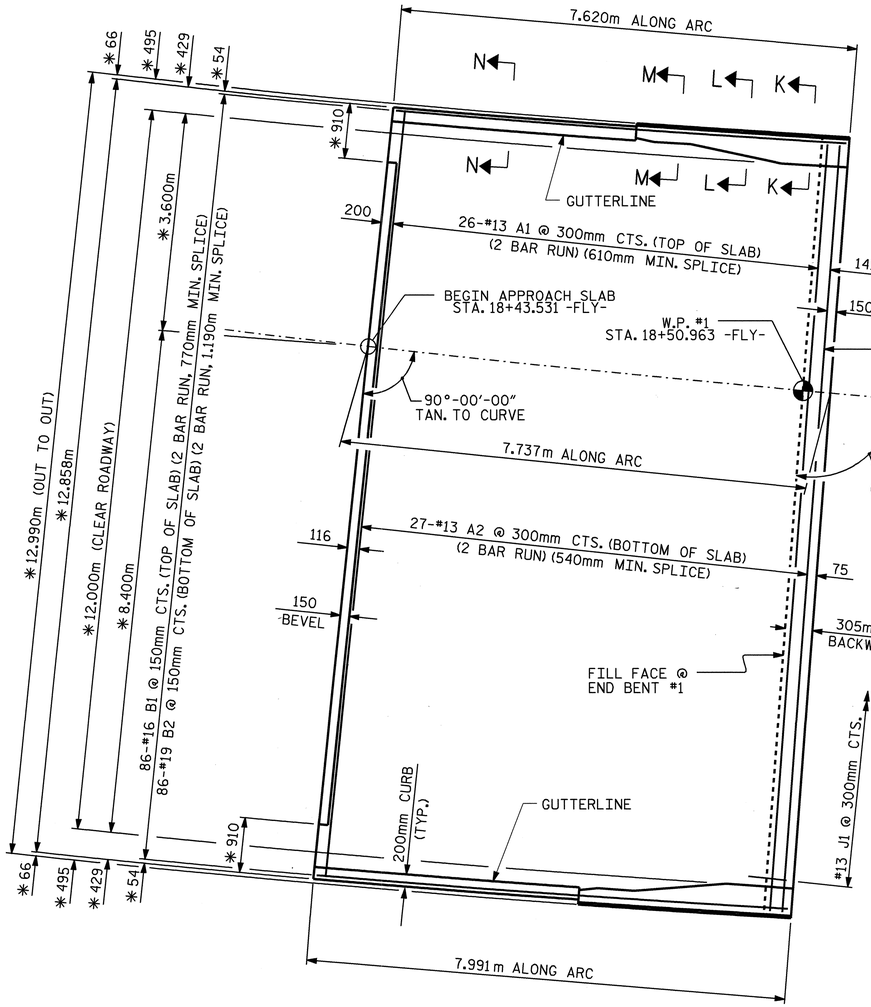

PLAN @ END BENT #1

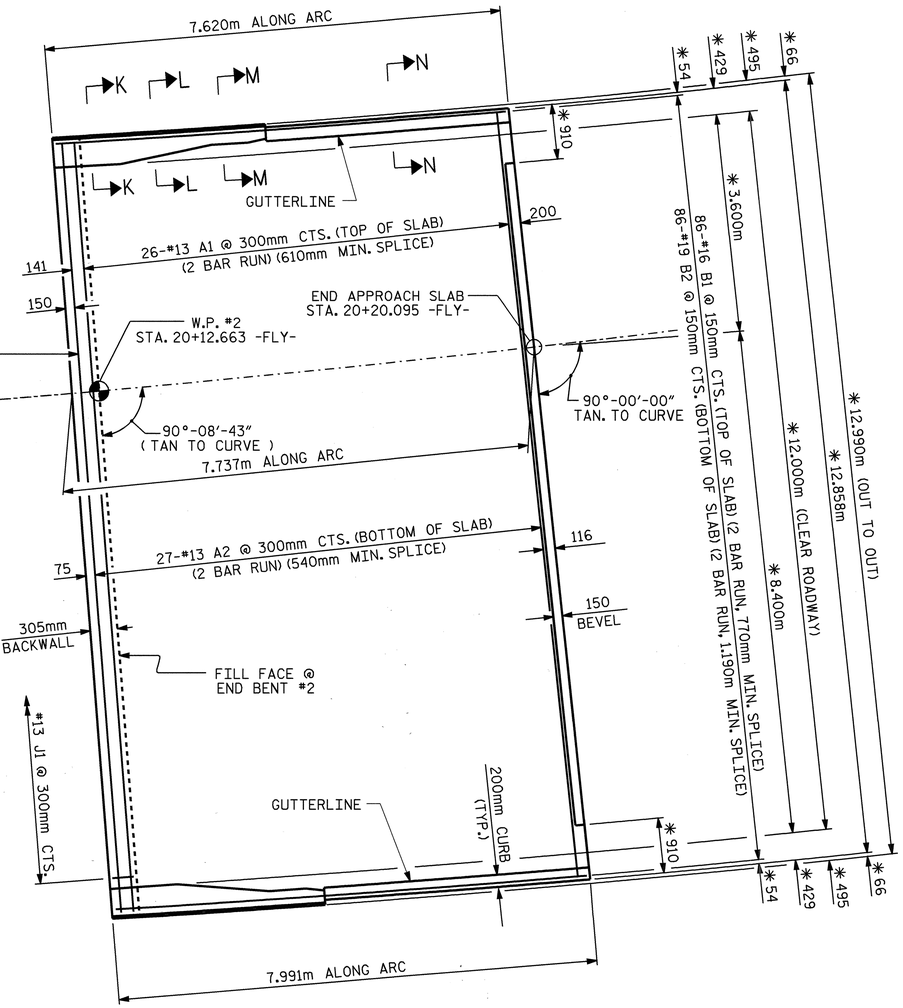

PLAN @ END BENT #2

✳ MEASURED RADIALLY

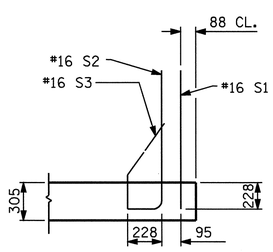

SECTION K-K

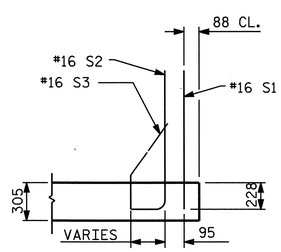

SECTION L-L

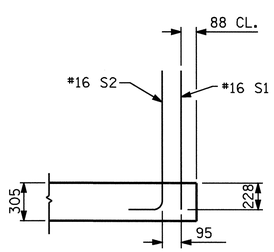

SECTION M-M

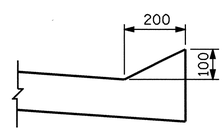

SECTION N-N

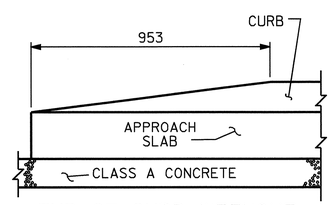

END OF CURB WITHOUT
SHOULDER BERM GUTTER

CURB DETAILS

PROJECT NO. R-0609IA
GUILFORD COUNTY
STATION: 19+26.763 -FLY-

SHEET 1 OF 4

STATE OF NORTH CAROLINA
DEPARTMENT OF TRANSPORTATION
RALEIGH

BRIDGE APPROACH SLAB FOR FLEXIBLE PAVEMENT WITH BARRIER RAIL

NORTH CAROLINA PROFESSIONAL SEAL 23926 ENGINEER BRIAN C. HANKS
5/22/06

REVISIONS								SHEET NO.
NO.	BY:	DATE:	NO.	BY:	DATE:			S-318
1			3					TOTAL SHEETS
2			4					321

DRAWN BY : J.L. WALTON DATE : 5/11/05
CHECKED BY : R. W. WRIGHT DATE : 11/05

15-MAY-2006 11:28
J:\STRUCT~1\frye\FINAL_~1\Str9\R-0609IA_sd_AS_09.dgn
rwwright

STR #9

NOTES

THE COST OF THE BARRIER RAIL ON THE APPROACH SLAB SHALL BE INCLUDED IN THE LUMP SUM CONTRACT PRICE BID FOR BRIDGE APPROACH SLABS.

APPROACH SLAB SHALL NOT BE CONSTRUCTED PRIOR TO COMPLETION OF THE BRIDGE DECK.

FOR REINFORCED BRIDGE APPROACH FILL INCLUDING FABRIC, IMPERMEABLE GEOMEMBRANE, 102mm Ø DRAINAGE PIPE, #78M STONE, AND SELECT MATERIAL, SEE ROADWAY PLANS.

TEMPORARY DRAINAGE AND TEMPORARY BERM AND SLOPE DRAINS WILL BE PAID FOR UNDER THE LUMP SUM PRICE FOR BRIDGE APPROACH SLAB.

AREA BETWEEN THE WINGWALL AND APPROACH SLAB SHALL BE GRADED TO DRAIN THE WATER AWAY FROM THE FILL FACE OF THE BRIDGE.

THE 150mm COMP. A.B.C. SHALL EXTEND 3m BEYOND THE END OF THE APPROACH SLAB AND 300mm OUTSIDE OF EACH EDGE OF THE SLAB.

THE CONTRACTOR MAY USE 100mm TYPE B-25.0B ASPHALT CONCRETE COURSE IN LIEU OF 150mm COMP. A.B.C. IF THIS OPTION IS USED, THE BASE COURSE SHALL EXTEND 300mm BEYOND THE END OF THE APPROACH SLAB AND THE WIDTH SHALL BE THE SAME AS THAT OF THE APPROACH SLAB.

THE CONTRACTOR MAY USE 125mm CLASS "A" CONCRETE BASE IN LIEU OF 150mm COMP. A.B.C. IF THIS OPTION IS USED, THE CONCRETE BASE SHALL EXTEND 300mm BEYOND THE END OF THE APPROACH SLAB AND THE WIDTH SHALL BE THE SAME AS THAT OF THE APPROACH SLAB. THE CONCRETE SHALL BE FINISHED TO A SMOOTH SURFACE AND A LAYER OF 13.6 kg. ROOFING FELT SHALL BE PLACED BETWEEN THE CONCRETE BASE AND THE APPROACH SLAB TO PREVENT BOND. THE APPROACH SLAB SHALL NOT BE CAST UNTIL THE CONCRETE BASE HAS REACHED AN AGE OF THREE CURING DAYS.

FOR BLOCKOUT OF COVERPLATE IN BARRIER RAIL SEE "EXPANSION JOINT SEAL DETAILS" SHEET.

BAR TYPES

ALL BAR DIMENSIONS ARE OUT TO OUT

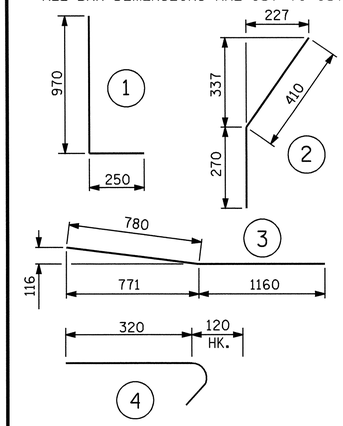

BILL OF MATERIAL

FOR ONE APPROACH SLAB (2 REQ'D)

BAR	NO.	SIZE	TYPE	LENGTH	WEIGHT
✳A1	54	#13	STR	6760	363
A2	54	#13	STR	6660	357
✳B1	172	#16	STR	4340	1159
B2	172	#19	STR	4600	1768
✳B3	14	#16	STR	3560	77
✳B4	2	#16	3	1940	6
✳J1	42	#13	4	440	18
✳S1	50	#16	STR	980	76
✳S2	50	#16	1	1220	95
✳S3	20	#16	2	680	21

REINFORCING STEEL	2125 kg.
✳EPOXY COATED REINFORCING STEEL	1815
CLASS AA CONCRETE BREAKDOWN	
POUR 1 SLAB & CURBS	31.3 C.M.
POUR 2 RAIL	1.6 C.M.
CLASS AA CONCRETE	32.9 C.M.

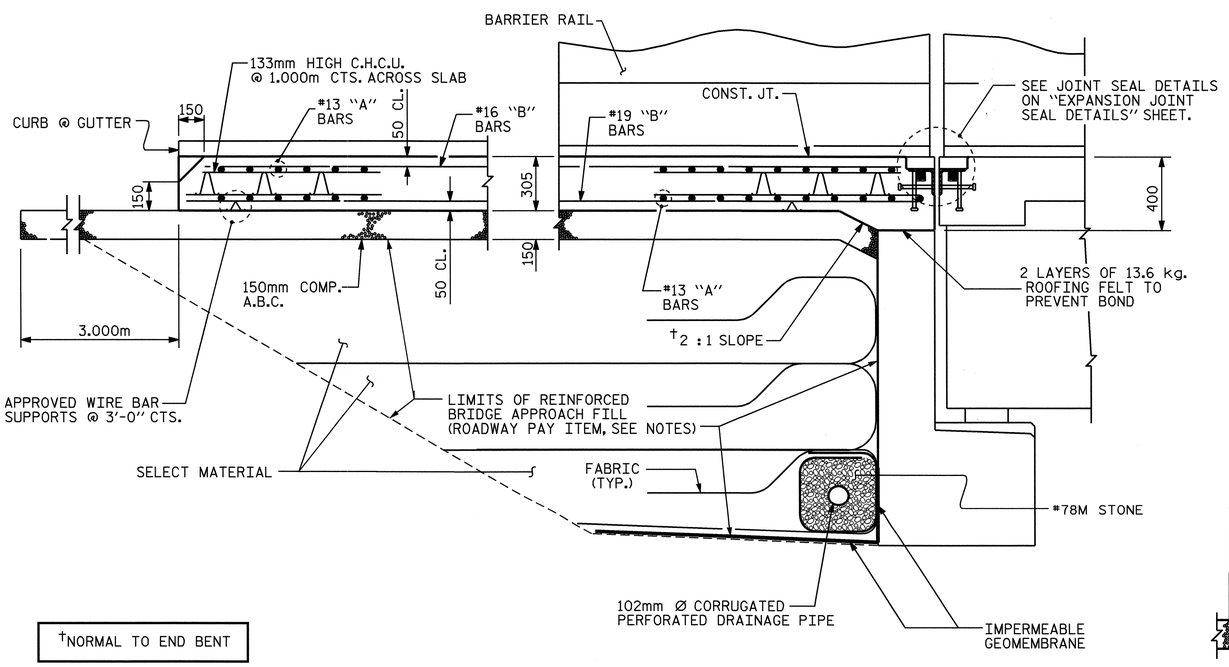

†NORMAL TO END BENT

SECTION THRU SLAB

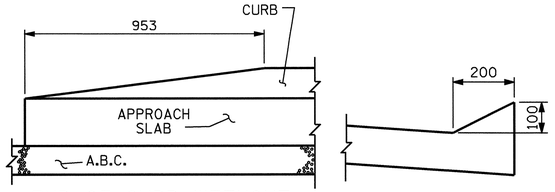

END OF CURB WITHOUT SHOULDER BERM GUTTER

SECTION N-N

CURB DETAILS

NORTH CAROLINA PROFESSIONAL SEAL 23926 ENGINEER BRIAN C. HANKS
5/22/06

PROJECT NO. R-0609IA
GUILFORD COUNTY
STATION: 19+26.763 -FLY-

SHEET 2 OF 4

STATE OF NORTH CAROLINA
DEPARTMENT OF TRANSPORTATION
RALEIGH

BRIDGE APPROACH SLAB FOR FLEXIBLE PAVEMENT WITH BARRIER RAIL

REVISIONS							SHEET NO.
NO.	BY:	DATE:	NO.	BY:	DATE:		S-319
1			3				TOTAL SHEETS
2			4				321

ASSEMBLED BY : J.L. WALTON DATE : 5/11/05
CHECKED BY : R.W. WRIGHT DATE : 11/05

15-MAY-2006 11:28
J:\STRUCT~1\frye\FINAL_~1\Str9\R-0609IA_sd_AS_09.dgn
rwwright

STR. #9 STD. NO. BAS5SM

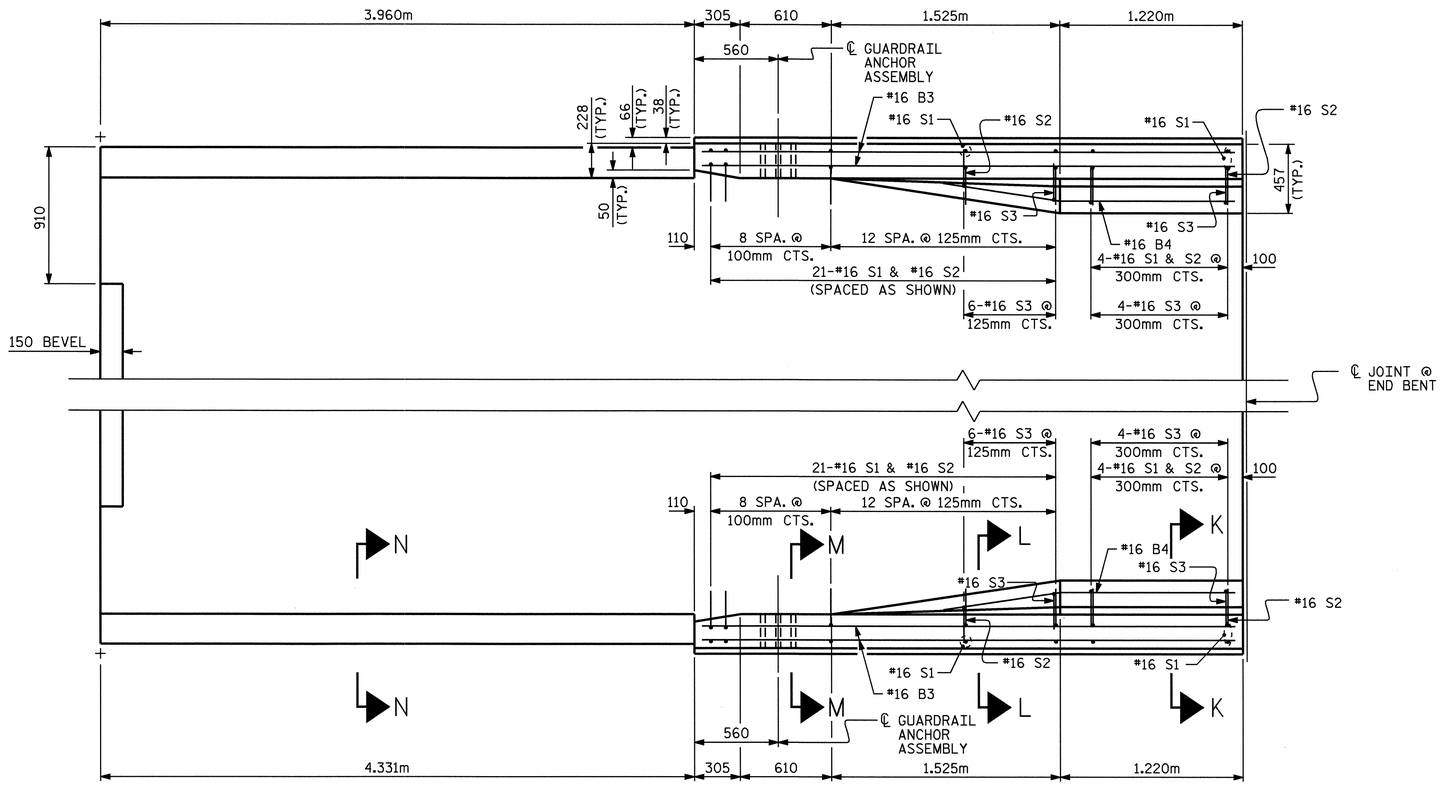

PLAN

BEGIN APPROACH SLAB SHOWN, END APPROACH SLAB SIMILAR

NOTES

THE GUARDRAIL ANCHOR ASSEMBLY SHALL CONSIST OF A 6mm HOLD DOWN PLATE AND 7 - 22.23mm Ø BOLTS WITH NUTS AND WASHERS.

THE HOLD-DOWN PLATE SHALL CONFORM TO AASHTO M270 GRADE 250. AFTER FABRICATION, THE HOLD-DOWN PLATE SHALL BE GALVANIZED IN ACCORDANCE WITH AASHTO M111.

BOLTS SHALL CONFORM TO THE REQUIREMENTS OF ASTM A307 AND NUTS SHALL CONFORM TO THE REQUIREMENTS OF AASHTO M291M. BOLTS, NUTS AND WASHERS SHALL BE GALVANIZED. AT THE CONTRACTOR'S OPTION, STAINLESS STEEL BOLTS, NUTS AND WASHERS MAY BE USED AS AN ALTERNATE FOR THE 22.23mm Ø GALVANIZED BOLTS, NUTS AND WASHERS. THEY SHALL CONFORM TO OR EXCEED THE MECHANICAL REQUIREMENTS OF ASTM A307. THE USE OF THIS ALTERNATE SHALL BE APPROVED BY THE ENGINEER.

AFTER INSTALLATION, THE EXPOSED THREAD OF THE BOLT SHALL BE BURRED WITH A SHARP POINTED TOOL.

THE COST OF THE GUARDRAIL ANCHOR ASSEMBLIES WITH BOLTS, NUTS AND WASHERS COMPLETE IN PLACE, SHALL BE INCLUDED IN THE LUMP SUM CONTRACT PRICE BID FOR BRIDGE APPROACH SLABS.

THE 32mm Ø HOLES SHALL BE FORMED OR DRILLED WITH A CORE BIT. IMPACT TOOLS WILL NOT BE PERMITTED. ANY CONCRETE DAMAGED BY THIS WORK SHALL BE REPAIRED TO THE SATISFACTION OF THE ENGINEER.

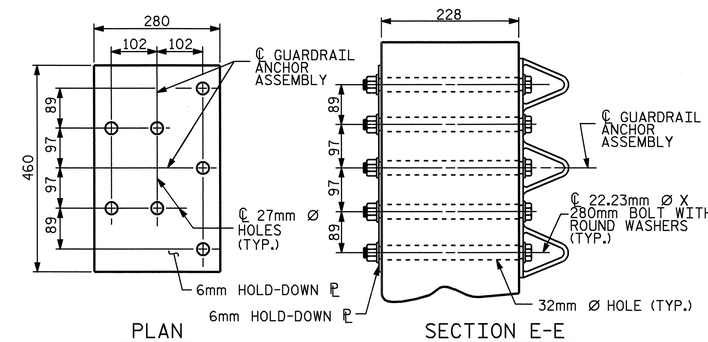

PLAN

SECTION E-E

GUARDRAIL ANCHOR ASSEMBLY DETAILS

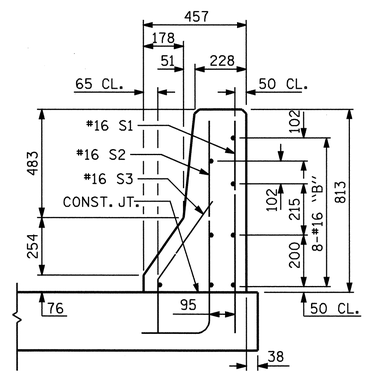

SECTION K-K

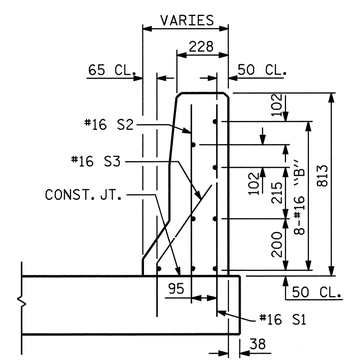

SECTION L-L

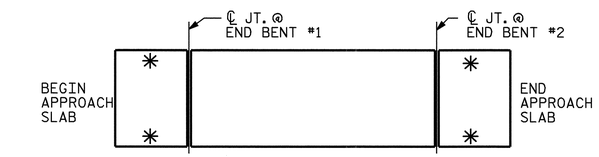

SKETCH SHOWING POINTS OF ATTACHMENT

✱ INDICATES POINTS OF ATTACHMENT

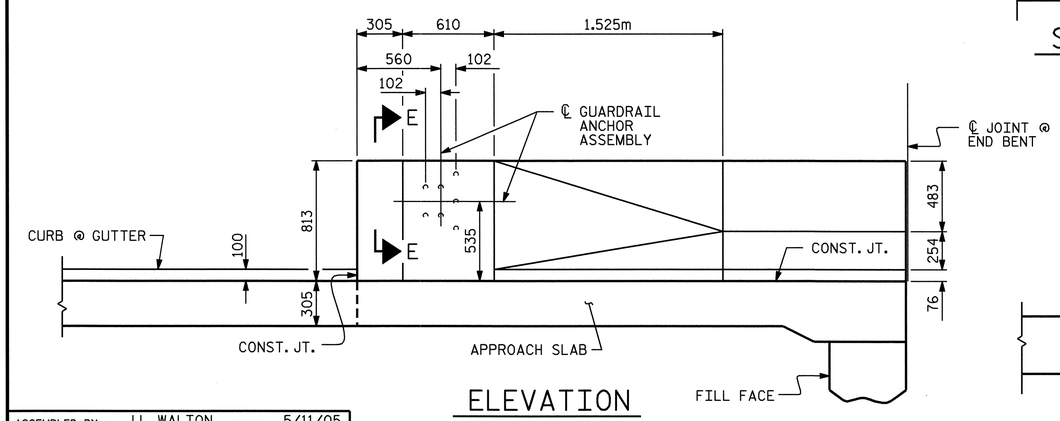

ELEVATION

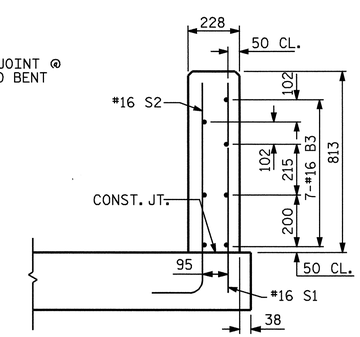

SECTION M-M

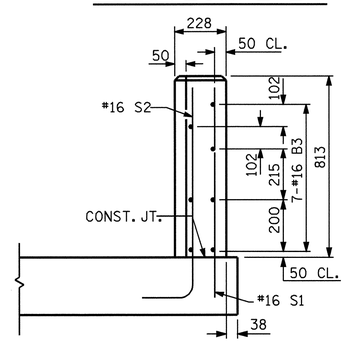

END VIEW

PROJECT NO. R-0609IA

GUILFORD COUNTY

STATION: 19+26.763 -FLY-

SHEET 3 OF 4

STATE OF NORTH CAROLINA
DEPARTMENT OF TRANSPORTATION
RALEIGH

BRIDGE APPROACH SLAB DETAILS FOR FLEXIBLE PAVEMENT WITH BARRIER RAIL

NORTH CAROLINA PROFESSIONAL SEAL 23926 ENGINEER BRIAN C. HANKS 5/22/06

REVISIONS						
NO.	BY:	DATE:	NO.	BY:	DATE:	
1			3			
2			4			

SHEET NO. S-320

TOTAL SHEETS 321

ASSEMBLED BY : J.L. WALTON DATE : 5/11/05
CHECKED BY : R.W. WRIGHT DATE : 11/05

15-MAY-2006 11:27
J:\STRUCT~1\frye\FINAL_~1\Str9\R-0609IA_sd_AS_09.dgn
rwwright

STR #9

STD. NO. BAS6SM

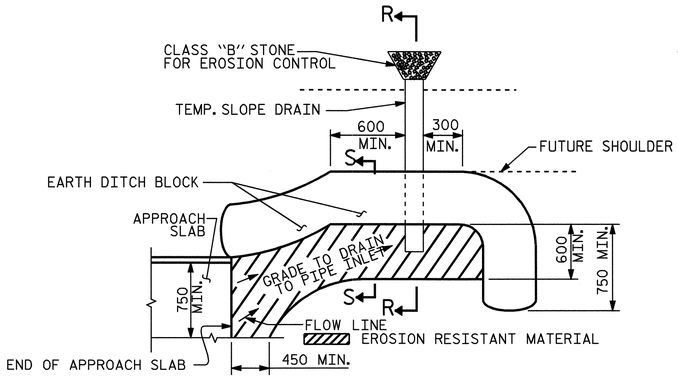

NOTE: IMMEDIATELY AFTER THE CONSTRUCTION OF THE APPROACH SLAB, THE CONTRACTOR SHALL PROVIDE TEMPORARY BERM AND SLOPE DRAIN. CONTRACTOR SHALL GRADE TO PIPE INLET AND PROVIDE EROSION RESISTANT MATERIAL AS SHOWN. THE EROSION RESISTANT MATERIAL SHALL BE EITHER 1) ASPHALT PLANT MIX, TYPE 1 OR TYPE 2, MIN. 50mm DEPTH, 2) EROSION CONTROL MAT, OR 3) CONCRETE, AS DIRECTED BY THE ENGINEER. THE SLOPE DRAIN SHALL CONSIST OF A NON-PERFORATED TEMPORARY DRAINAGE PIPE, 305mm IN DIAMETER.

PLAN VIEW

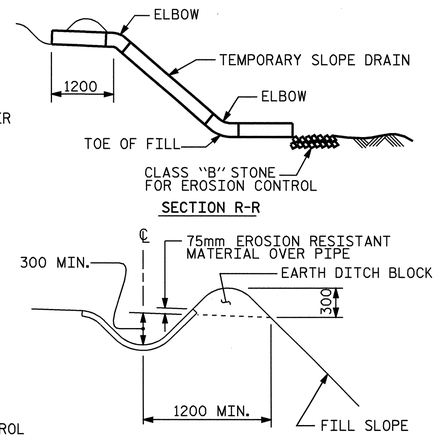

SECTION S-S

TEMPORARY BERM AND SLOPE DRAIN DETAILS

(TO BE USED WHEN SHOULDER BERM GUTTER IS REQUIRED)

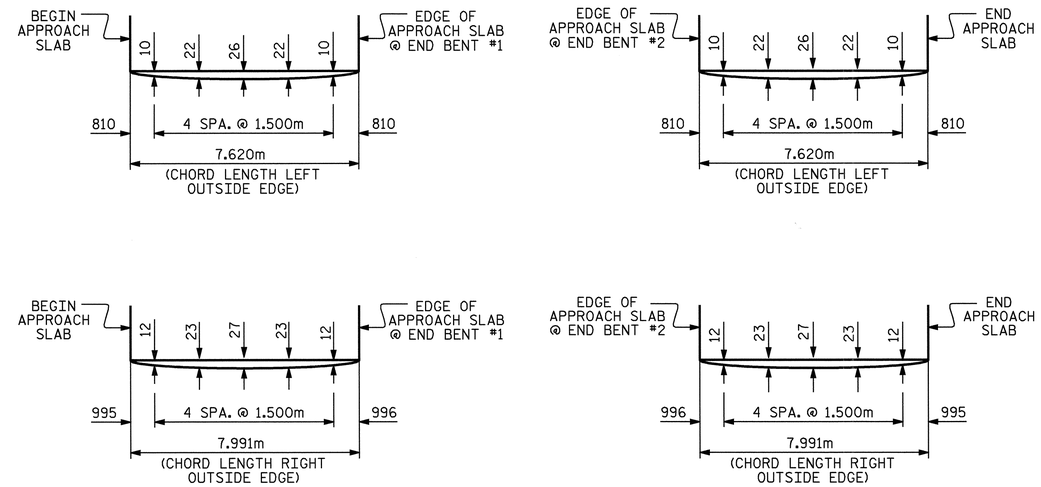

ARC OFFSETS @ END BENT #1

ARC OFFSETS @ END BENT #2

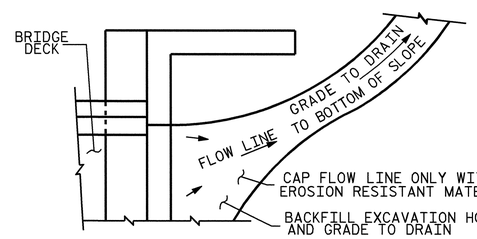

NOTE: IF THE APPROACH SLAB IS NOT CONSTRUCTED IMMEDIATELY AFTER THE BACKFILLING OF THE END BENT EXCAVATION, GRADE TO DRAIN TO THE BOTTOM OF THE SLOPE AND PROVIDE EROSION RESISTANT MATERIAL, SUCH AS FIBERGLASS ROVING OR AS DIRECTED BY THE ENGINEER TO PREVENT SOIL EROSION AND TO PROTECT THE AREA ADJACENT TO THE STRUCTURE. THE CONTRACTOR WILL BE REQUIRED TO REMOVE THESE MATERIALS PRIOR TO CONSTRUCTION OF THE APPROACH SLAB.

TEMPORARY DRAINAGE DETAIL

PROJECT NO. R-0609IA
GUILFORD COUNTY
STATION: 19+26.763 -FLY-

SHEET 4 OF 4

STATE OF NORTH CAROLINA
DEPARTMENT OF TRANSPORTATION
RALEIGH

STANDARD BRIDGE APPROACH SLAB DETAILS

NORTH CAROLINA PROFESSIONAL SEAL 23926 ENGINEER BRIAN C. HAWKS
5/22/06

REVISIONS						SHEET NO.
NO.	BY:	DATE:	NO.	BY:	DATE:	S-321
1			3			TOTAL SHEETS
2			4			321

ASSEMBLED BY : J.L. WALTON	DATE : 5/11/05		
CHECKED BY : R.W. WRIGHT	DATE : 11/05		
DRAWN BY : FCJ 11/88	REV. 8/16/99	RAL/LES	
CHECKED BY : ARB 11/88	REV. 10/17/00	RWW/LES	
	REV. 5/7/03	RWW/JTE	

STR #9

STD. NO. BAS10SM

BM #3 RR SPIKE IN 400mm HICKORY 67m LEFT OF -BL- STA. 28+30.000 EL. 224.450

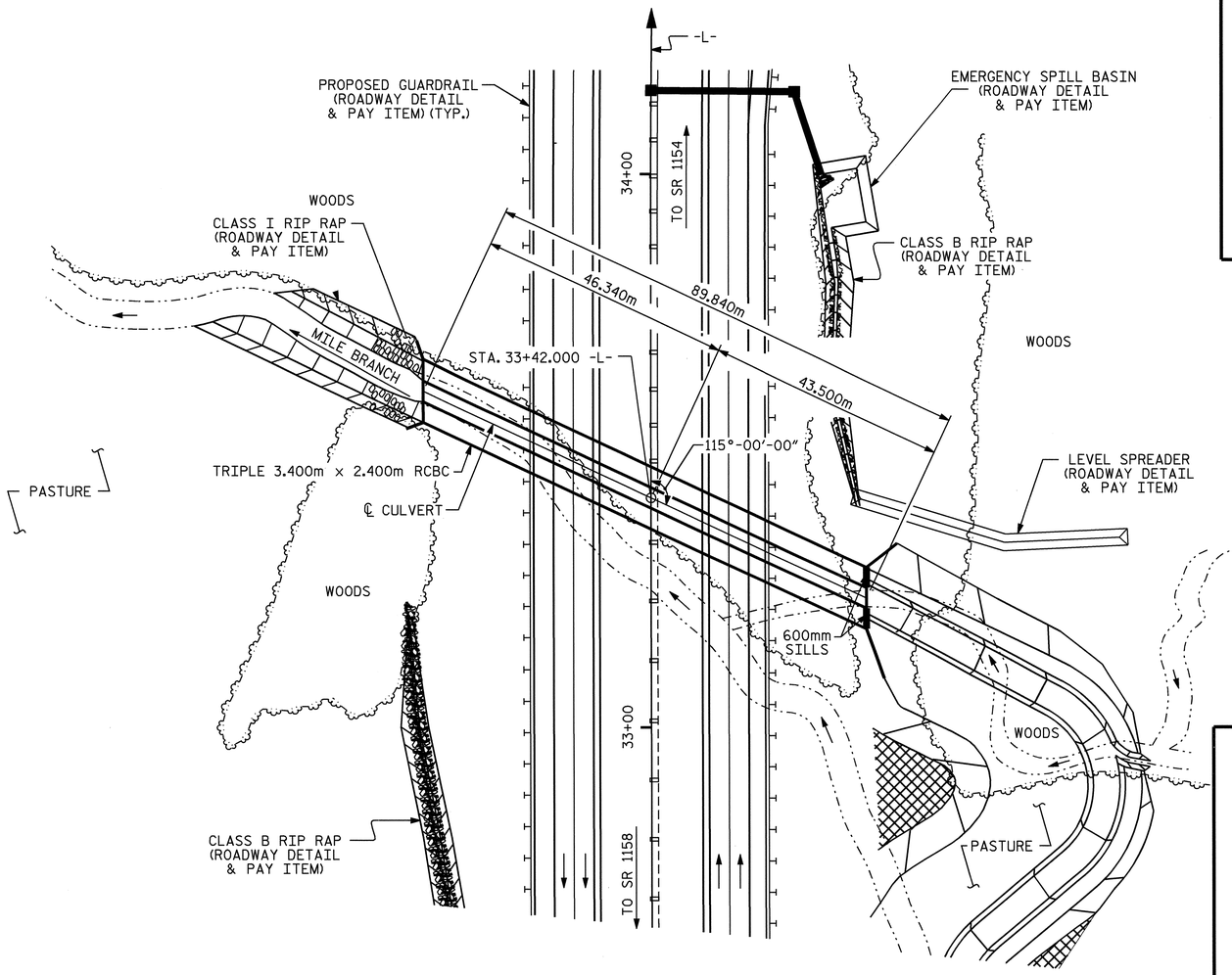

LOCATION SKETCH

FOR UTILITY INFORMATION, SEE UTILITY PLANS AND SPECIAL PROVISIONS.

HYDRAULIC DATA

DESIGN DISCHARGE	= 43 m³/S
FREQUENCY OF DESIGN FLOOD	= 50 YRS.
DESIGN HIGH WATER ELEVATION	= 219.470
DRAINAGE AREA	= 5.81sq.km.
BASIC DISCHARGE (Q100)	= 59 m³/S
BASIC HIGH WATER ELEVATION	= 219.990

OVERTOPPING FLOOD DATA

OVERTOPPING DISCHARGE	= 201 m³/S
FREQUENCY OF OVERTOPPING FLOOD	= 500 YRS.
OVERTOPPING FLOOD ELEVATION	= 228.410

ROADWAY DATA

GRADE POINT EL. STA. 33+42.000 -L-	= 228.451
BED EL. STA. 33+42.000 -L-	= 216.240
ROADWAY SLOPES	= 2 :1

TOTAL STRUCTURE QUANTITIES

CLASS A CONCRETE		
BARREL @ 16.43 m³/m	1476.1	m³
WINGS, ETC.	23.7	m³
SILLS	1.4	m³
TOTAL	1501.2	m³
REINFORCING STEEL		
BARREL	99378	kg
WINGS, ETC.	746	kg
TOTAL	100124	kg
CULVERT EXCAVATION	LUMP SUM	
FOUNDATION COND. MAT'L	690 METRIC TONS	

F.A. PROJECT NO. STP-NHF-119-1(15)

NOTES

ASSUMED LIVE LOAD ----------MS18 OR ALTERNATE LOADING.

DESIGN FILL----------10.20m

FOR OTHER DESIGN DATA AND GENERAL NOTES SEE SHEET SNSM.

76mm Ø WEEP HOLES INDICATED TO BE IN ACCORDANCE WITH THE SPECIFICATIONS.

CONCRETE IN CULVERT TO BE POURED IN THE FOLLOWING ORDER:

1. WING FOOTINGS AND FLOOR SLAB INCLUDING 100mm OF ALL VERTICAL WALLS.
2. THE REMAINING PORTIONS OF THE WALLS AND WINGS FULL HEIGHT FOLLOWED BY ROOF SLAB AND HEADWALLS.
3. 0.6m SILLS IN BARRELS 1 AND 3 (UPSTREAM END)

THE RESIDENT ENGINEER SHALL CHECK THE LENGTH OF CULVERT BEFORE STAKING IT OUT TO MAKE CERTAIN THAT IT WILL PROPERLY TAKE CARE OF THE FILL.

DIMENSIONS FOR WING LAYOUT AS WELL AS ADDITIONAL REINFORCING STEEL EMBEDDED IN BARREL ARE SHOWN ON WING SHEET.

TRANSVERSE CONSTRUCTION JOINTS SHALL BE USED IN THE BARREL, SPACED TO LIMIT THE POURS TO A MAXIMUM OF 21.0m. LOCATION OF JOINTS SHALL BE SUBJECT TO APPROVAL OF THE ENGINEER.

STEEL IN THE BOTTOM SLAB MAY BE SPLICED AT THE PERMITTED CONSTRUCTION JOINT AT THE CONTRACTOR'S OPTION. EXTRA WEIGHT OF STEEL DUE TO THE SPLICES SHALL BE PAID FOR BY THE CONTRACTOR.

AT THE CONTRACTOR'S OPTION, HE MAY SPLICE THE VERTICAL REINFORCING STEEL IN THE INTERIOR FACE OF EXTERIOR WALLS AND BOTH FACES OF INTERIOR WALLS ABOVE LOWER WALL CONSTRUCTION JOINT. THE SPLICE LENGTH SHALL BE AS PROVIDED IN THE SPLICE LENGTH CHART SHOWN ON THE PLANS. EXTRA WEIGHT OF STEEL DUE TO THE SPLICES SHALL BE PAID FOR BY THE CONTRACTOR.

THE CONTRACTOR SHALL PROVIDE INDEPENDENT ASSURANCE SAMPLES OF REINFORCING STEEL AS FOLLOWS: FOR PROJECTS REQUIRING UP TO 360,000kg OF REINFORCING STEEL, ONE 760mm SAMPLE OF EACH SIZE BAR USED, AND FOR PROJECTS REQUIRING OVER 360,000kg OF REINFORCING STEEL, TWO 760mm SAMPLES OF EACH SIZE BAR USED. THE BARS FROM WHICH THE SAMPLES ARE TAKEN MUST THEN BE SPLICED WITH REPLACEMENT BARS OF THE SIZE AND LENGTH OF THE SAMPLE, PLUS A MINIMUM LAP SPLICE OF THIRTY BAR DIAMETERS.

FOR FALSEWORK AND FORMWORK, SEE SPECIAL PROVISIONS.

FOR SUBMITTAL OF WORKING DRAWINGS, SEE SPECIAL PROVISIONS.

ALL DIMENSIONS ARE IN MILLIMETERS UNLESS OTHERWISE NOTED.

ALL ELEVATIONS ARE IN METERS.

A 900mm STRIP OF FILTER FABRIC SHALL BE ATTACHED TO THE FILL FACE OF THE WING COVERING THE ENTIRE LENGTH OF THE EXPANSION JOINT.

FOR CULVERT DIVERSION DETAILS AND PAY ITEM, SEE EROSION CONTROL PLANS.

DETAILED DRAWINGS FOR FALSEWORK AND FORMS FOR THIS TRIPLE 3.400m x 2.400m RCBC SHALL BE SUBMITTED. SEE SHEET SNSM.

FOR CRANE SAFETY, SEE SPECIAL PROVISIONS.

NO PRECAST REINFORCED BOX CULVERT OPTION WILL BE ALLOWED.

METRIC

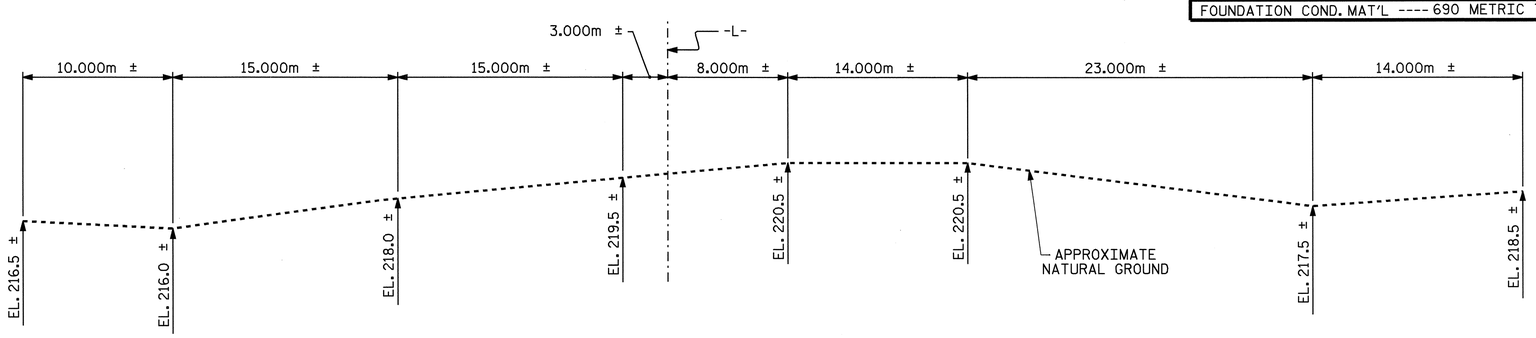

PROFILE ALONG ℄ CULVERT

PROJECT NO. R-0609IA
GUILFORD COUNTY
STATION: 33+42.000 -L-

SHEET 1 OF 4 CULVERT NO. 979

STATE OF NORTH CAROLINA
DEPARTMENT OF TRANSPORTATION
RALEIGH

TRIPLE 3.400m X 2.400m CONCRETE BOX CULVERT 115° SKEW

NORTH CAROLINA PROFESSIONAL SEAL 19196 ENGINEER JOHN C. FRYE 5-22-06

NORTH CAROLINA PROFESSIONAL SEAL 23926 ENGINEER BRIAN C. HANKS 5/22/06

REVISIONS							SHEET NO.
NO.	BY:	DATE:	NO.	BY:	DATE:		C-1
1			3				TOTAL SHEETS
2			4				9

DRAWN BY : J.L. WALTON DATE : 7/14/04
CHECKED BY : D.G. ELY DATE : 9/27/04

15-MAY-2006 10:57
J:\STRUCT~1\frye\FINAL_~1\Str10\R-0609IA_sd_CU_10.dgn
rwwright

STR #10

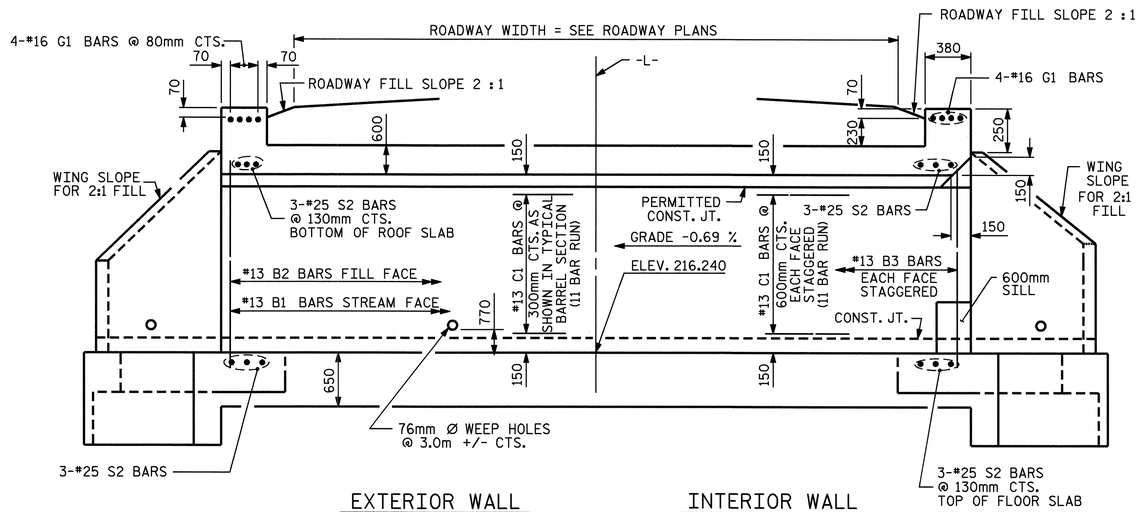

EXTERIOR WALL INTERIOR WALL

CULVERT SECTION NORMAL TO ROADWAY

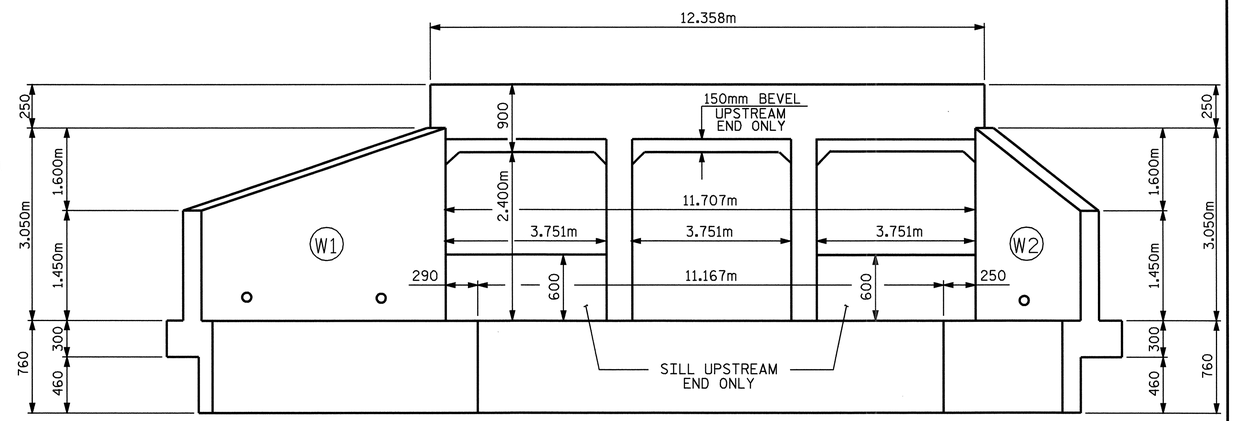

END ELEVATION - NORMAL TO SKEW

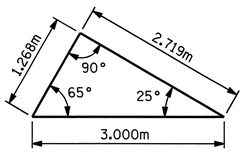

SKEW TRIANGLE

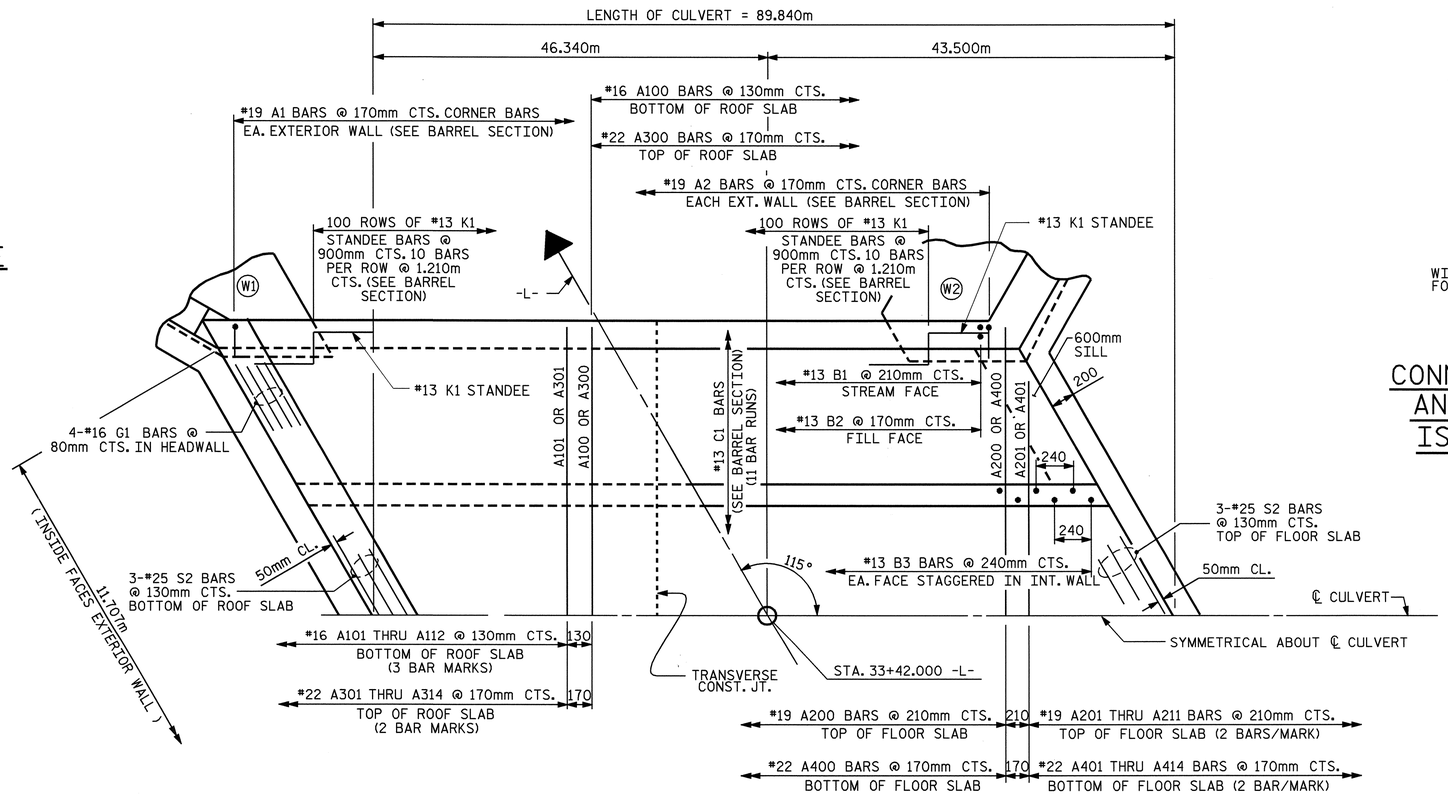

PART PLAN - ROOF SLAB

PART PLAN - FLOOR SLAB

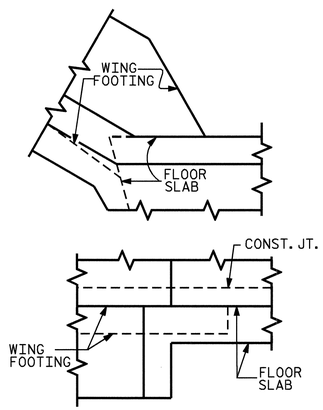

DETAIL

CONNECTION OF WING FOOTING AND FLOOR SLAB WHEN SLAB IS THICKER THAN FOOTING

PROJECT NO. R-0609IA
GUILFORD COUNTY
STATION: 33+42.000 -L-

SHEET 2 OF 4

STATE OF NORTH CAROLINA
DEPARTMENT OF TRANSPORTATION
RALEIGH

TRIPLE 3.400m X 2.400m CONCRETE BOX CULVERT 115° SKEW

NORTH CAROLINA PROFESSIONAL SEAL 23926 ENGINEER BRIAN C. HAWKINS
5/22/06

REVISIONS						SHEET NO.
NO.	BY:	DATE:	NO.	BY:	DATE:	C-2
1			3			TOTAL SHEETS
2			4			9

DRAWN BY : J.L. WALTON DATE : 7/14/04
CHECKED BY : D.G. ELY DATE : 9/27/04

15-MAY-2006 10:56
J:\STRUCT~1\frye\FINAL_~1\Str10\R-0609IA_sd_CU_10.dgn
rwwright

STR #10

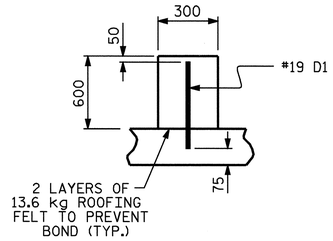

SECTION THROUGH SILL

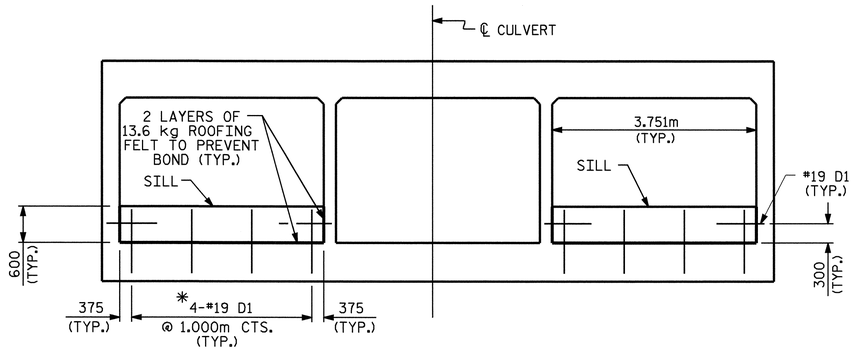

* DOWELS MAY BE PUSHED INTO GREEN CONCRETE AFTER SLAB HAS BEEN FLOAT FINISHED

INLET END ELEVATION NORMAL TO SKEW

CULVERT SILL DETAILS

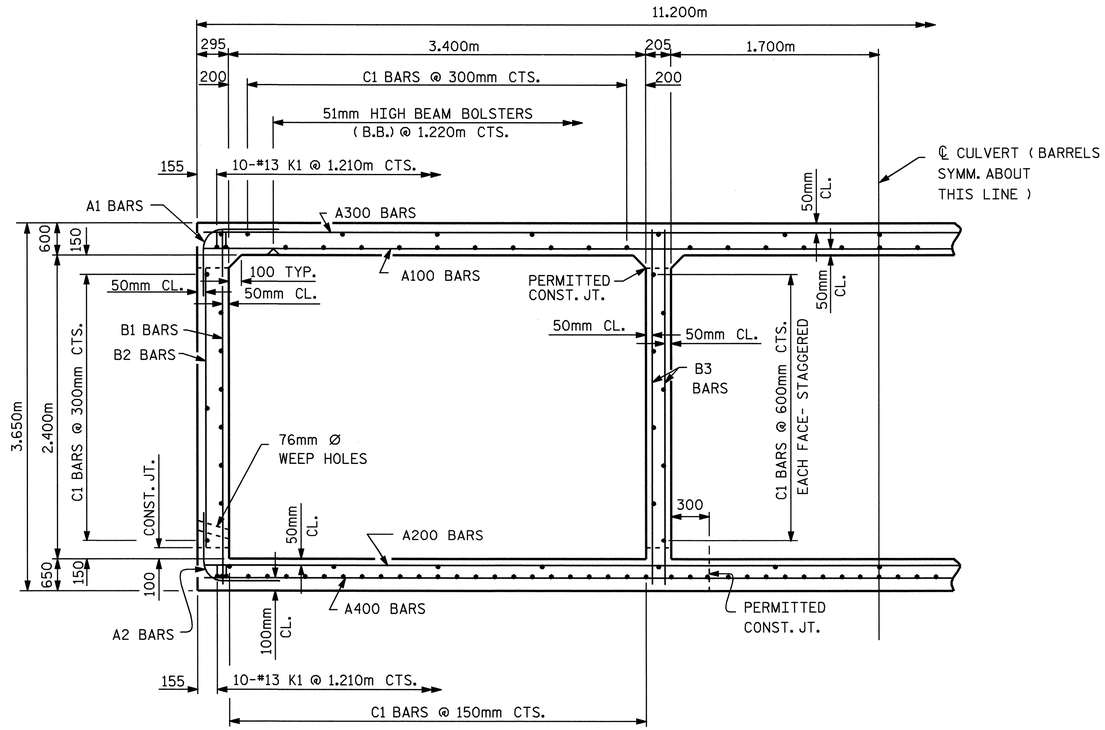

RIGHT ANGLE SECTION OF BARREL

THERE ARE 162 "C" BARS IN SECTION OF BARREL.

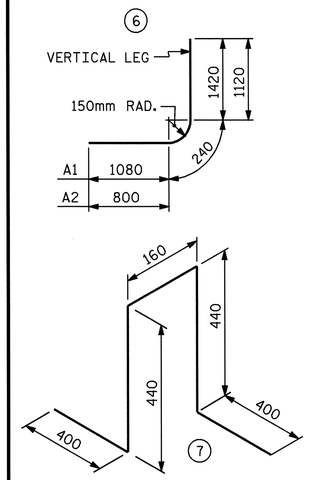

BAR TYPE

DIMENSIONS ARE OUT TO OUT

SPLICE LENGTH CHART

BAR	SIZE	SPLICE LENGTH
A200	19	940
A400	22	920
B1	13	540
B3	13	540
C1	13	590

BILL OF MATERIAL

BAR	NO.	SIZE	TYPE	LENGTH	WEIGHT
A1	1058	19	6	2740	6479
A2	1058	19	6	2160	5108
A100	651	16	STR	11040	11154
A101	6	16	STR	10160	95
A102	6	16	STR	9320	87
A103	6	16	STR	8480	79
A104	6	16	STR	7640	71
A105	6	16	STR	6800	63
A106	6	16	STR	5960	55
A107	6	16	STR	5140	48
A108	6	16	STR	4300	40
A109	6	16	STR	3460	32
A110	6	16	STR	2620	24
A111	6	16	STR	1800	17
A112	6	16	STR	960	9
A200	403	19	STR	11040	9944
A201	4	19	STR	10080	90
A202	4	19	STR	9200	82
A203	4	19	STR	8280	74
A204	4	19	STR	7400	66
A205	4	19	STR	6480	58
A206	4	19	STR	5580	50
A207	4	19	STR	4700	42
A208	4	19	STR	3780	34
A209	4	19	STR	2900	26
A210	4	19	STR	1980	18
A211	4	19	STR	1100	10
A300	498	22	STR	11040	16725
A301	4	22	STR	10260	125
A302	4	22	STR	9520	116
A303	4	22	STR	8820	107
A304	4	22	STR	8080	98
A305	4	22	STR	7340	89
A306	4	22	STR	6600	80
A307	4	22	STR	5900	72
A308	4	22	STR	5160	63
A309	4	22	STR	4420	54
A310	4	22	STR	3700	45
A311	4	22	STR	2980	36
A312	4	22	STR	2240	27
A313	4	22	STR	1520	18
A314	4	22	STR	780	9
A400	498	22	STR	11040	16725
A401	4	22	STR	10260	125
A402	4	22	STR	9520	116
A403	4	22	STR	8820	107
A404	4	22	STR	8080	98
A405	4	22	STR	7340	89
A406	4	22	STR	6600	80
A407	4	22	STR	5900	72
A408	4	22	STR	5160	63
A409	4	22	STR	4420	54
A410	4	22	STR	3700	45
A411	4	22	STR	2980	36
A412	4	22	STR	2240	27
A413	4	22	STR	1520	18
A414	4	22	STR	780	9
B1	856	13	STR	3460	2944
B2	1058	13	STR	2180	2293
B3	1500	13	STR	3460	5159
C1	1782	13	STR	8680	15375
D1	12	19	STR	1120	30
G1	8	16	STR	12240	152
K1	2000	13	7	1840	3658
S2	12	25	STR	12240	584
REINFORCING STEEL				kg.	99378

PROJECT NO. R-0609IA

GUILFORD COUNTY

STATION: 33+42.000 -L-

SHEET 3 OF 4

STATE OF NORTH CAROLINA
DEPARTMENT OF TRANSPORTATION
RALEIGH

BARREL STANDARD
TRIPLE 3.400m X 2.400m
CONCRETE BOX CULVERT
115° SKEW

NORTH CAROLINA PROFESSIONAL SEAL 23926 ENGINEER BRIAN C. HAWKS
3/22/06

REVISIONS							SHEET NO.
NO.	BY:	DATE:	NO.	BY:	DATE:		C-3
1			3				TOTAL SHEETS
2			4				9

DRAWN BY : J.L. WALTON DATE : 7/14/04
CHECKED BY : D.G. ELY DATE : 9/27/04

15-MAY-2006 10:56
J:\STRUCT~1\frye\FINAL_~1\Str10\R-0609IA_sd_CU_10.dgn
rwwright

STR #10

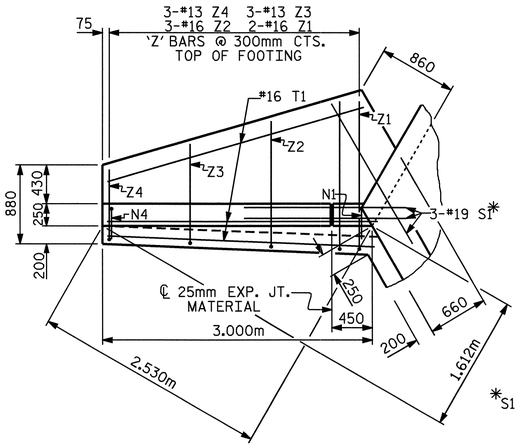

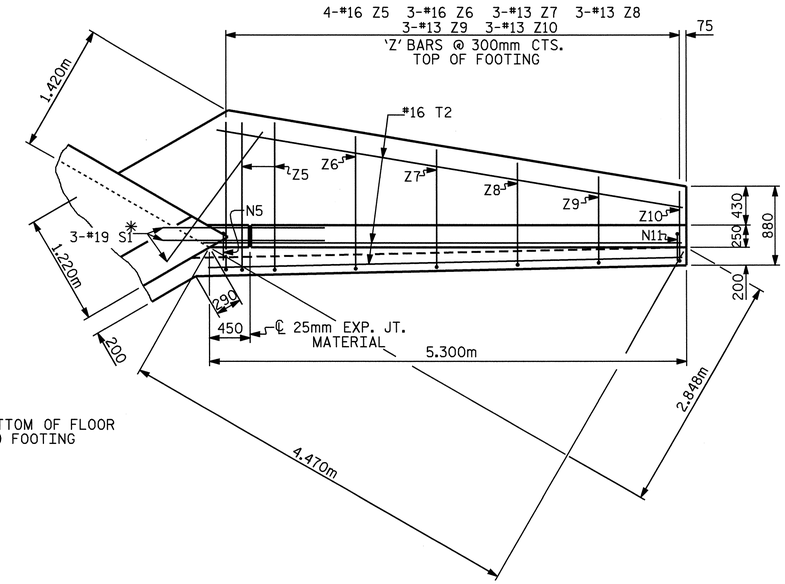

*S1 BARS @ BOTTOM OF FLOOR SLAB AND FOOTING

PLAN W2

PLAN W1

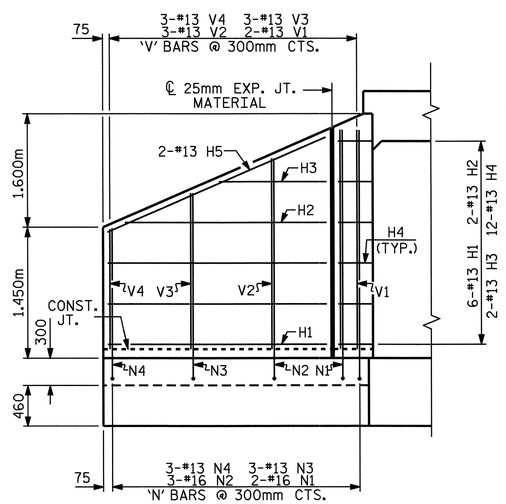

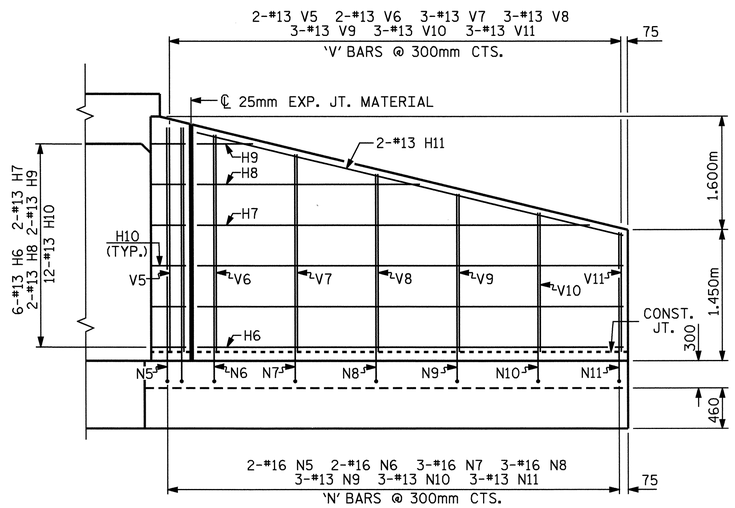

ELEVATION W2

ELEVATION W1

FOR WING ORIENTATION, SEE BARREL STANDARD SHEET.

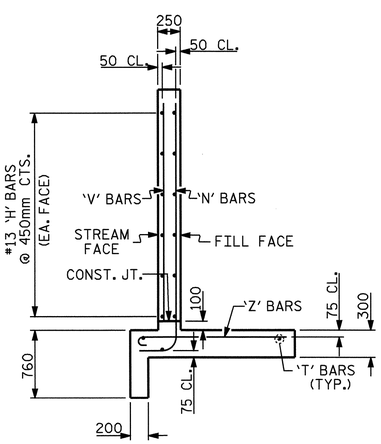

TYPICAL WING SECTION

BAR TYPES

ALL BAR DIMENSIONS ARE OUT TO OUT.

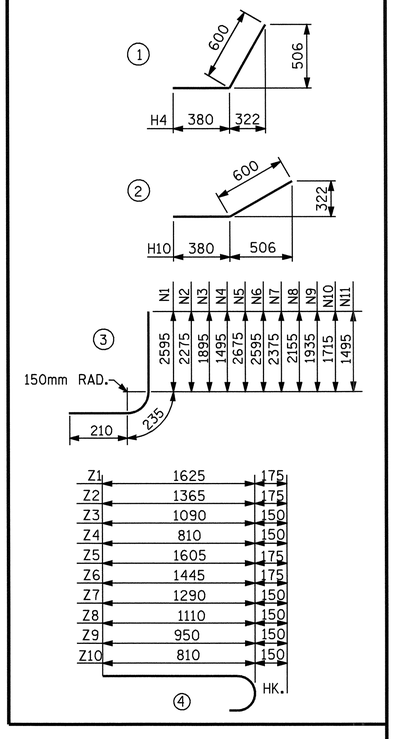

BILL OF MATERIAL

BAR	NO.	SIZE	TYPE	LENGTH	WEIGHT
H1	12	13	STR	2440	29
H2	4	13	STR	2240	9
H3	4	13	STR	1200	5
H4	24	13	1	980	23
H5	4	13	STR	2640	10
H6	12	13	STR	4740	57
H7	4	13	STR	4460	18
H8	4	13	STR	2600	10
H9	4	13	STR	760	3
H10	24	13	2	980	23
H11	4	13	STR	4860	19
N1	4	16	3	3040	19
N2	6	16	3	2720	25
N3	6	13	3	2340	14
N4	6	13	3	1940	12
N5	4	16	3	3120	19
N6	4	16	3	3040	19
N7	6	16	3	2820	26
N8	6	16	3	2600	24
N9	6	13	3	2380	14
N10	6	13	3	2160	13
N11	6	13	3	1940	12
S1	12	19	STR	1800	48
T1	6	16	STR	3000	28
T2	6	16	STR	5300	49
V1	4	13	STR	2420	10
V2	6	13	STR	2100	13
V3	6	13	STR	1720	10
V4	6	13	STR	1320	8
V5	4	13	STR	2500	10
V6	4	13	STR	2420	10
V7	6	13	STR	2200	13
V8	6	13	STR	1980	12
V9	6	13	STR	1760	10
V10	6	13	STR	1540	9
V11	6	13	STR	1320	8
Z1	4	16	4	1800	11
Z2	6	16	4	1540	14
Z3	6	13	4	1240	7
Z4	6	13	4	960	6
Z5	8	16	4	1780	22
Z6	6	16	4	1620	15
Z7	6	13	4	1440	9
Z8	6	13	4	1260	8
Z9	6	13	4	1100	7
Z10	6	13	4	960	6

REINFORCING STEEL FOR 4 WING WALLS	746	kg
CLASS A CONCRETE		
4 WINGS	17.5	m^3
2 HEADWALLS	2.8	m^3
2 END CURTAIN WALLS	3.4	m^3
TOTAL	23.7	m^3

PROJECT NO. R-0609IA
GUILFORD COUNTY
STATION: 33+42.000 -L-

SHEET 4 OF 4

STATE OF NORTH CAROLINA
DEPARTMENT OF TRANSPORTATION
RALEIGH

WINGS FOR CONCRETE BOX CULVERT H=2.400m SLOPE=2:1 115° SKEW

NORTH CAROLINA PROFESSIONAL SEAL 23926 ENGINEER BRIAN C. HAWKS
5/22/06

REVISIONS						SHEET NO.
NO.	BY:	DATE:	NO.	BY:	DATE:	C-4
1			3			TOTAL SHEETS 9
2			4			

DRAWN BY : J.L. WALTON DATE : 7/14/04
CHECKED BY : D.G. ELY DATE : 9/27/04

15-MAY-2006 10:56
J:\STRUCT~1\frye\FINAL_~1\Str10\R-0609IA_sd_CU_10.dgn
rwwright

STR #10

BM #5 RR SPIKE IN BASE OF 600mm RED OAK 74m RIGHT OF -BL- STA. 42+82.000 EL. 239.694

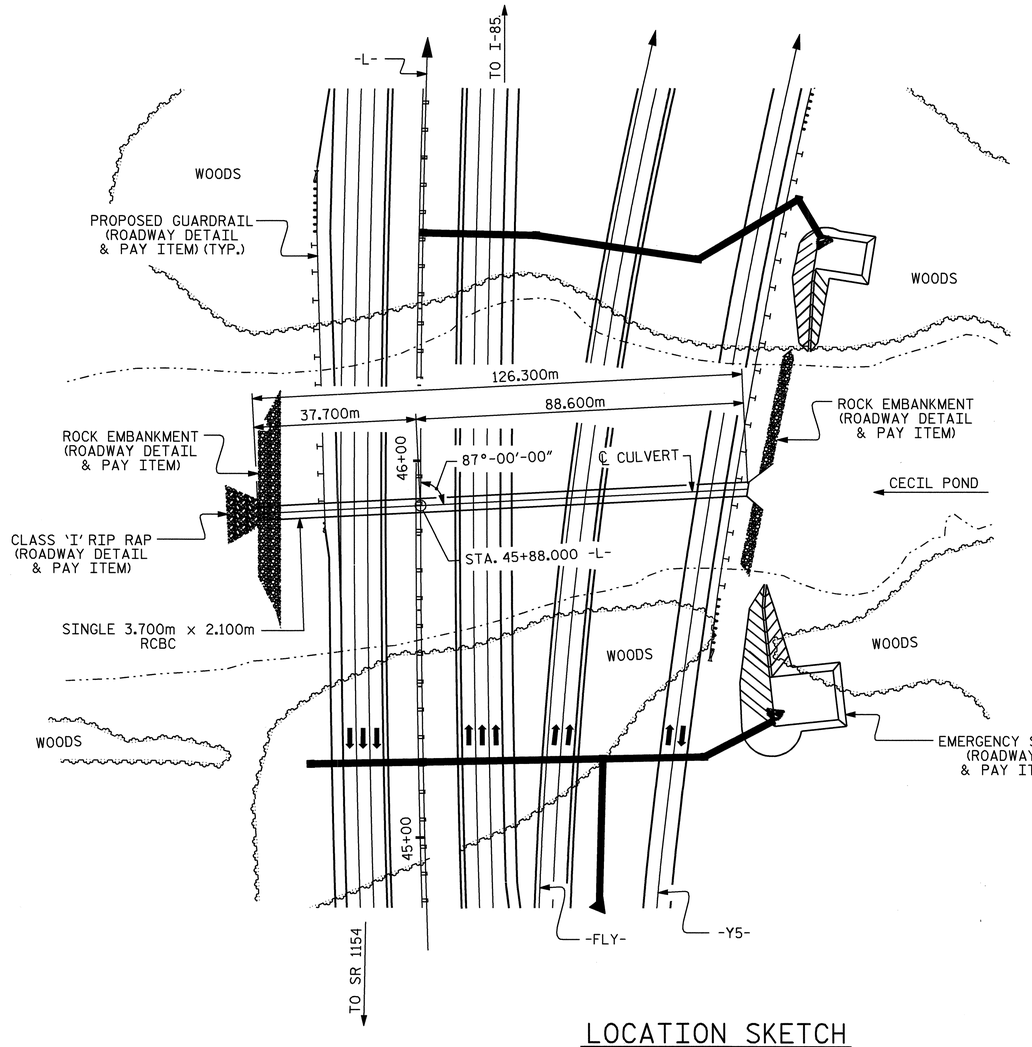

LOCATION SKETCH

FOR UTILITY INFORMATION, SEE UTILITY PLANS AND SPECIAL PROVISIONS.

HYDRAULIC DATA

DESIGN DISCHARGE	= 14 m3/s
FREQUENCY OF DESIGN FLOOD	= 50 YRS.
DESIGN HIGH WATER ELEVATION	= 234.060
DRAINAGE AREA	= 71.4 Ha
BASIC DISCHARGE (Q100)	= 15 m3/s
BASIC HIGH WATER ELEVATION	= 234.140

OVERTOPPING FLOOD DATA

OVERTOPPING DISCHARGE	= 19.6 m3/s
FREQUENCY OF OVERTOPPING FLOOD	= 100+ YRS.
OVERTOPPING FLOOD ELEVATION	= 235.740

ROADWAY DATA

GRADE POINT EL. STA. 45+88.000 -L-	= 236.122
BED EL. STA. 45+88.000 -L-	= 230.330
ROADWAY SLOPES	= 2 : 1

TOTAL STRUCTURE QUANTITIES

CLASS A CONCRETE		
BARREL @ 3.37 m3/m	425.6	m3
INLET WING	7.5	m3
OUTLET WING	7.1	m3
TOTAL	440.2	m3
REINFORCING STEEL		
BARREL	44943	kg
INLET WING	280	kg
OUTLET WING	257	kg
TOTAL	45480	kg
CULVERT EXCAVATION ------ LUMP SUM		
FOUNDATION COND. MAT'L --------- 360 METRIC TONS		

F.A. PROJECT NO. STP-NHF-119-1(15)

ASSUMED LIVE LOAD ----------MS18 OR ALTERNATE LOADING.

DESIGN FILL----------4.15m

FOR OTHER DESIGN DATA AND GENERAL NOTES SEE SHEET SNSM.

CONCRETE IN CULVERT TO BE POURED IN THE FOLLOWING ORDER:

1. WING FOOTINGS AND FLOOR SLAB INCLUDING 100mm OF ALL VERTICAL WALLS.
2. THE REMAINING PORTIONS OF THE WALLS AND WINGS FULL HEIGHT FOLLOWED BY ROOF SLAB AND HEADWALLS.

THE RESIDENT ENGINEER SHALL CHECK THE LENGTH OF CULVERT BEFORE STAKING IT OUT TO MAKE CERTAIN THAT IT WILL PROPERLY TAKE CARE OF THE FILL.

DIMENSIONS FOR WING LAYOUT AS WELL AS ADDITIONAL REINFORCING STEEL EMBEDDED IN BARREL ARE SHOWN ON WING SHEET.

TRANSVERSE CONSTRUCTION JOINTS SHALL BE USED IN THE BARREL, SPACED TO LIMIT THE POURS TO A MAXIMUM OF 21.0m. LOCATION OF JOINTS SHALL BE SUBJECT TO APPROVAL OF THE ENGINEER.

AT THE CONTRACTOR'S OPTION, HE MAY SPLICE THE VERTICAL REINFORCING STEEL IN THE INTERIOR FACE OF EXTERIOR WALL ABOVE LOWER WALL CONSTRUCTION JOINT. THE SPLICE LENGTH SHALL BE AS PROVIDED IN THE SPLICE LENGTH CHART SHOWN ON THE PLANS. EXTRA WEIGHT OF STEEL DUE TO THE SPLICES SHALL BE PAID FOR BY THE CONTRACTOR.

AT THE CONTRACTOR'S OPTION HE MAY SUBMIT, TO THE ENGINEER FOR APPROVAL, DESIGN AND DETAIL DRAWINGS FOR A PRECAST REINFORCED CONCRETE BOX CULVERT IN LIEU OF THE CAST-IN-PLACE CULVERT SHOWN ON THE PLANS. THE DESIGN SHALL PROVIDE THE SAME SIZE AND NUMBER OF BARRELS AS USED IN THE CAST-IN-PLACE DESIGN. FOR OPTIONAL PRECAST REINFORCED CONCRETE BOX CULVERT AT STA. 45+88.00 -L-, SEE SPECIAL PROVISIONS.

THE CONTRACTOR SHALL PROVIDE INDEPENDENT ASSURANCE SAMPLES OF REINFORCING STEEL AS FOLLOWS: FOR PROJECTS REQUIRING UP TO 360,000kg OF REINFORCING STEEL, ONE 760mm SAMPLE OF EACH SIZE BAR USED, AND FOR PROJECTS REQUIRING OVER 360,000kg OF REINFORCING STEEL, TWO 760mm SAMPLES OF EACH SIZE BAR USED. THE BARS FROM WHICH THE SAMPLES ARE TAKEN MUST THEN BE SPLICED WITH REPLACEMENT BARS OF THE SIZE AND LENGTH OF THE SAMPLE, PLUS A MINIMUM LAP SPLICE OF THIRTY BAR DIAMETERS.

FOR FALSEWORK AND FORMWORK, SEE SPECIAL PROVISIONS.

FOR SUBMITTAL OF WORKING DRAWINGS, SEE SPECIAL PROVISIONS.

ALL DIMENSIONS ARE IN MILLIMETERS UNLESS OTHERWISE NOTED.

ALL ELEVATIONS ARE IN METERS.

A 900mm STRIP OF FILTER FABRIC SHALL BE ATTACHED TO THE FILL FACE OF THE WING COVERING THE ENTIRE LENGTH OF THE EXPANSION JOINT.

FOR CULVERT DIVERSION DETAILS AND PAY ITEM, SEE EROSION CONTROL PLANS.

FOR CRANE SAFETY, SEE SPECIAL PROVISIONS.

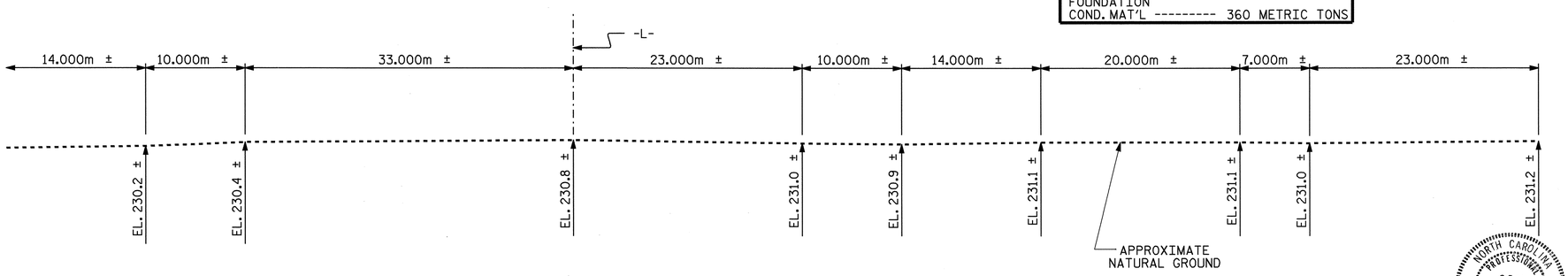

PROFILE ALONG ℄ CULVERT

PROJECT NO. R-0609IA
GUILFORD COUNTY
STATION: 45+88.000 -L-

SHEET 1 OF 5

STATE OF NORTH CAROLINA
DEPARTMENT OF TRANSPORTATION
RALEIGH

SINGLE 3.700m X 2.100m CONCRETE BOX CULVERT 87° SKEW

REVISIONS						SHEET NO.
NO.	BY:	DATE:	NO.	BY:	DATE:	C-5
1			3			TOTAL SHEETS
2			4			9

NORTH CAROLINA PROFESSIONAL SEAL 19196 ENGINEER JOHN C. FRYE 5-22-06

NORTH CAROLINA PROFESSIONAL SEAL 23926 ENGINEER BRIAN C. HANKS 5/22/06

DRAWN BY : J.L. WALTON DATE : 8/30/04
CHECKED BY : R.W. WRIGHT DATE : 9/30/04

15-MAY-2006 10:55
J:\STRUCT-1\frye\FINAL_~1\Str11\R-0609IA_sd_CU_11.dgn
rwwright

STR #11

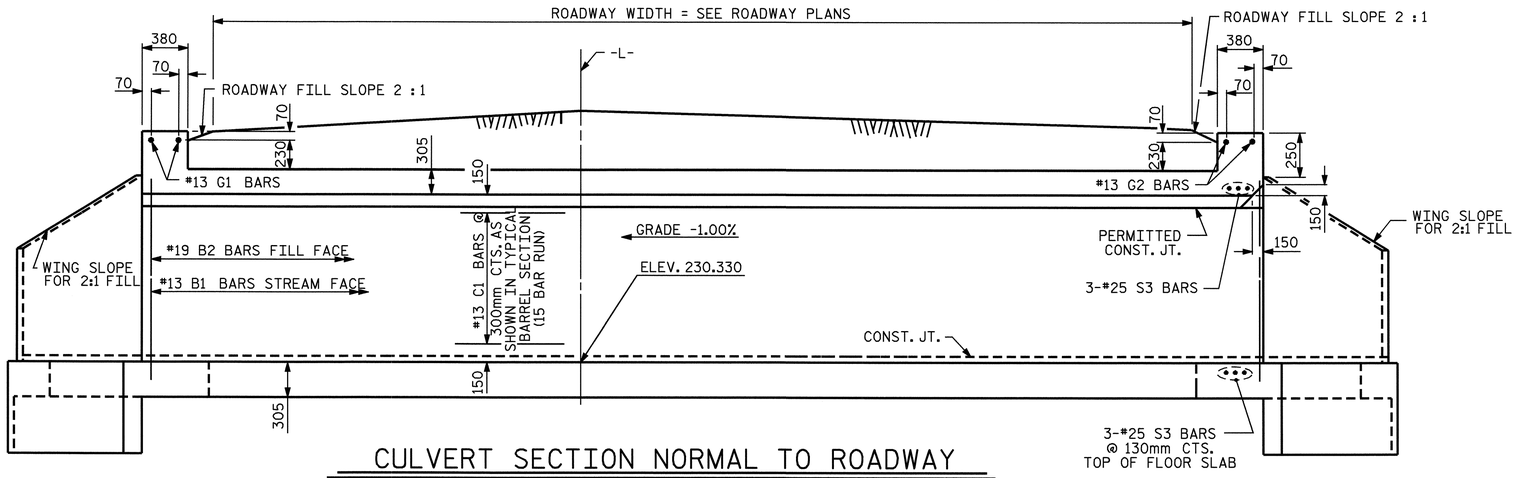

CULVERT SECTION NORMAL TO ROADWAY

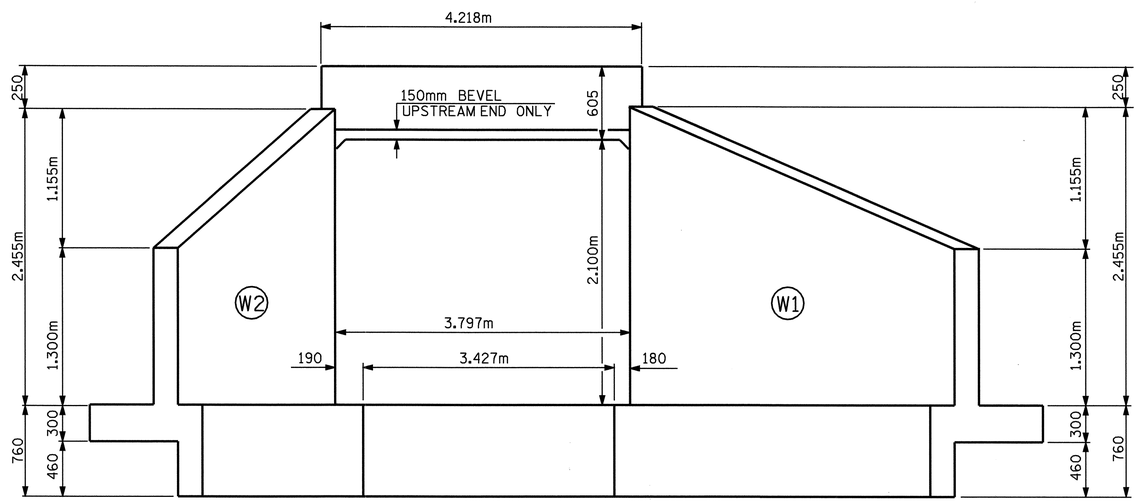

INLET END ELEVATION

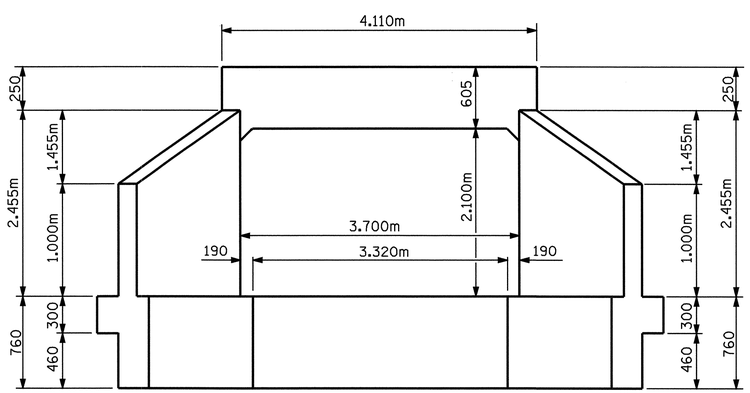

OUTLET END ELEVATION

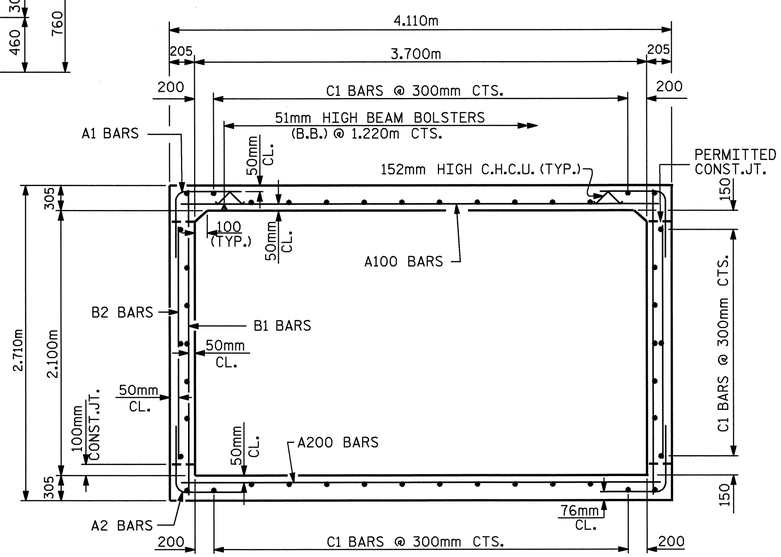

RIGHT ANGLE SECTION OF BARREL

THERE ARE 44 "C" BARS IN SECTION OF BARREL

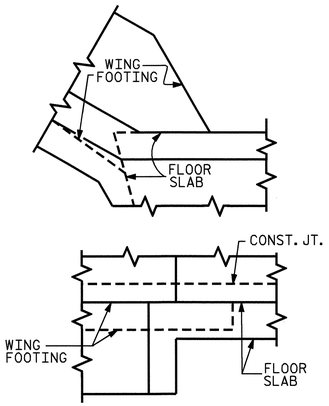

DETAIL

CONNECTION OF WING FOOTING AND FLOOR SLAB WHEN SLAB IS THICKER THAN FOOTING

BILL OF MATERIAL

BAR	NO.	SIZE	TYPE	LENGTH	WEIGHT
A1	1264	19	1	1800	5085
A2	1264	19	1	1800	5085
A100	839	22	STR	3960	10107
A101	2	22	STR	2360	14
A102	2	22	STR	960	6
A200	839	22	STR	3960	10107
A201	2	22	STR	2360	14
A202	2	22	STR	960	6
B1	1264	13	STR	2540	3191
B2	1264	19	STR	1880	5311
C1	660	13	STR	9000	5904
G1	2	13	STR	3980	8
G2	2	13	STR	4080	8
S3	6	25	STR	4080	97
REINFORCING STEEL					44943 kg

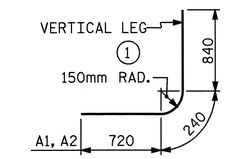

BAR TYPE

DIMENSIONS ARE OUT TO OUT

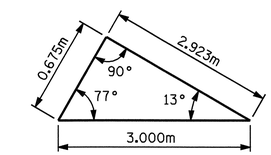

SKEW TRIANGLE

SPLICE LENGTH CHART		
BAR	SIZE	SPLICE LENGTH
B1	13	540
C1	13	590

PROJECT NO. R-0609IA

GUILFORD COUNTY

STATION: 45+88.000 -L-

SHEET 2 OF 5

STATE OF NORTH CAROLINA
DEPARTMENT OF TRANSPORTATION
RALEIGH

SINGLE 3.700m X 2.100m CONCRETE BOX CULVERT 87° SKEW

NORTH CAROLINA PROFESSIONAL SEAL 23926 ENGINEER BRIAN C. HAWKS
3/22/06

REVISIONS								SHEET NO.
NO.	BY:	DATE:	NO.	BY:	DATE:			C-6
1			3					TOTAL SHEETS
2			4					9

DRAWN BY : J.L. WALTON DATE : 8/30/04
CHECKED BY : R.W. WRIGHT DATE : 9/30/04

15-MAY-2006 10:55
J:\STRUCT~1\frye\FINAL_~1\Strl\R-0609IA_sd_CU_11.dgn
rwwright

STR #11

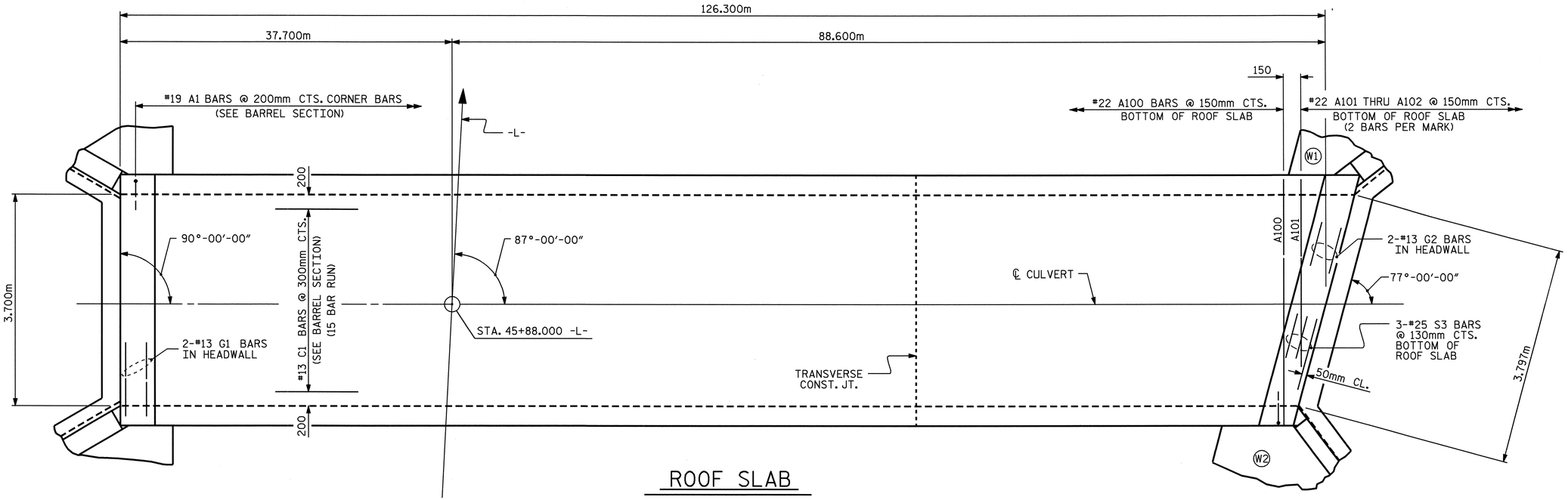

ROOF SLAB

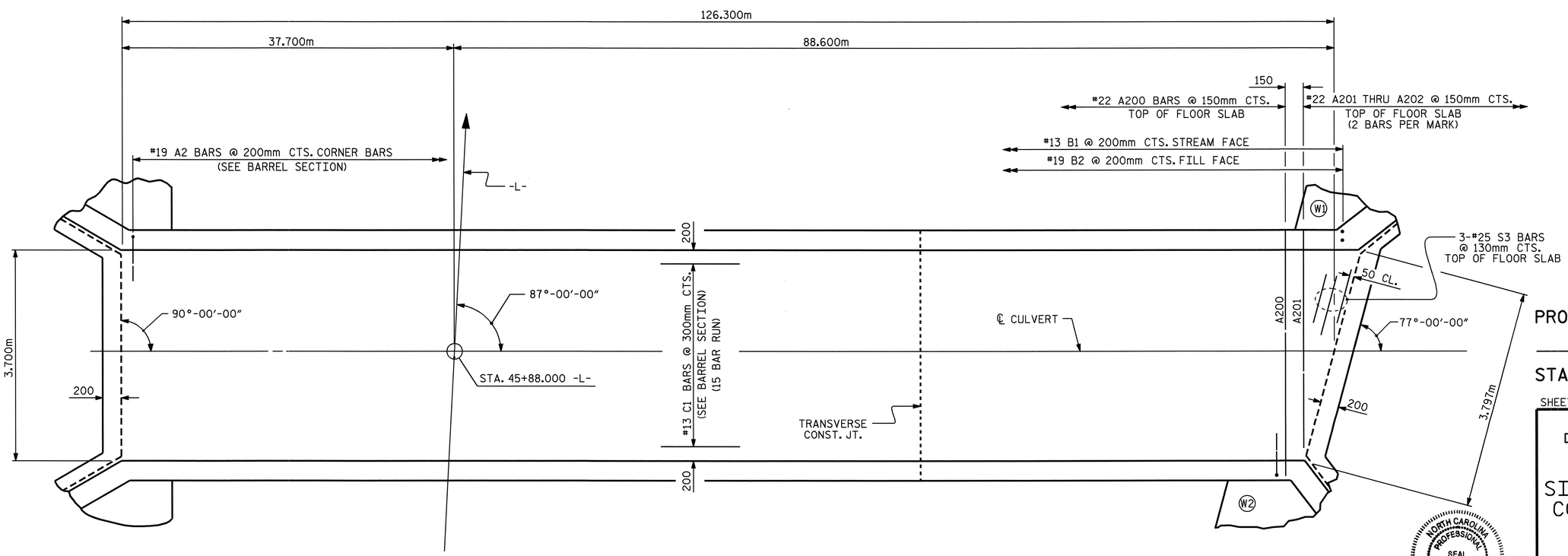

FLOOR SLAB

PROJECT NO. R-0609IA
GUILFORD COUNTY
STATION: 45+88.000 -L-

SHEET 3 OF 5

STATE OF NORTH CAROLINA
DEPARTMENT OF TRANSPORTATION
RALEIGH

SINGLE 3.700m X 2.100m
CONCRETE BOX CULVERT
87° SKEW

NORTH CAROLINA PROFESSIONAL SEAL 23926 ENGINEER BRIAN C. HANKS
5/22/06

REVISIONS						SHEET NO.
NO.	BY:	DATE:	NO.	BY:	DATE:	C-7
1			3			TOTAL SHEETS
2			4			9

DRAWN BY : J.L. WALTON DATE : 8/30/04
CHECKED BY : R.W. WRIGHT DATE : 9/30/04

15-MAY-2006 10:55
J:\STRUCT~1\frye\FINAL_~1\Str11\R-0609IA_sd_CU_11.dgn
rwwright

STR #11

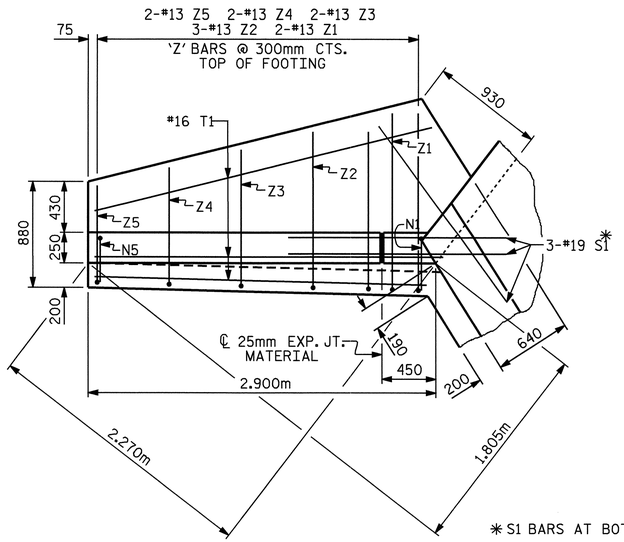

✱ S1 BARS AT BOTTOM OF FLOOR SLAB AND FOOTING

PLAN W2

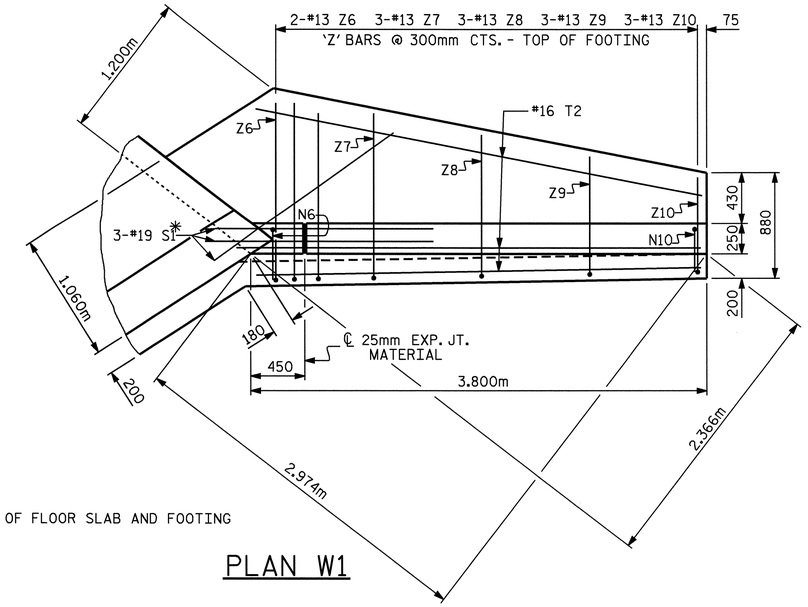

PLAN W1

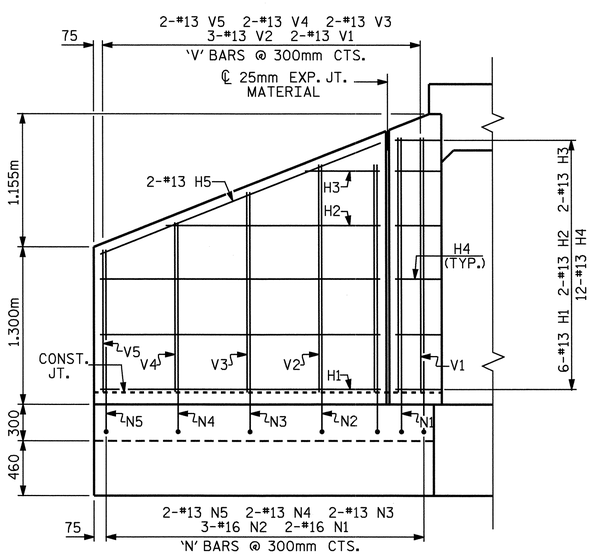

ELEVATION W2

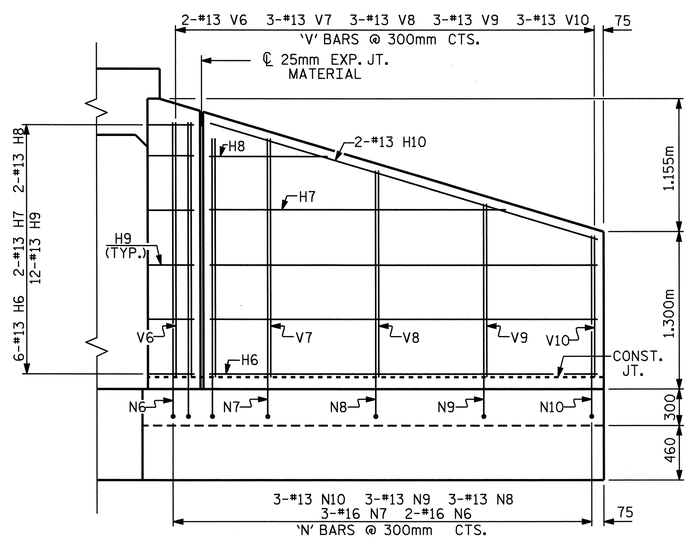

ELEVATION W1

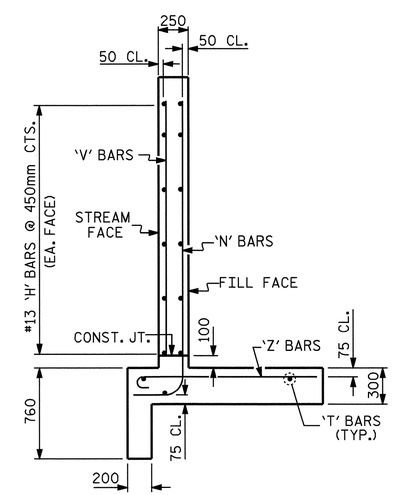

TYPICAL WING SECTION

FOR WING ORIENTATION, SEE BARREL STANDARD SHEET.

BAR TYPES

ALL BAR DIMENSIONS ARE OUT TO OUT.

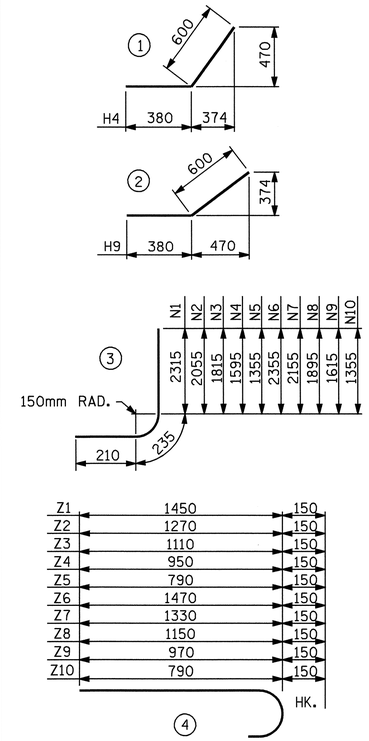

BILL OF MATERIAL (INLET WINGS)

BAR	NO.	SIZE	TYPE	LENGTH	WEIGHT
H1	6	13	STR	2340	14
H2	2	13	STR	1740	3
H3	2	13	STR	600	1
H4	12	13	1	980	12
H5	2	13	STR	2500	5
H6	6	13	STR	3240	19
H7	2	13	STR	2500	5
H8	2	13	STR	1000	2
H9	12	13	2	980	12
H10	2	13	STR	3360	7
N1	2	16	3	2760	9
N2	3	16	3	2500	12
N3	2	13	3	2260	4
N4	2	13	3	2040	4
N5	2	13	3	1800	4
N6	2	16	3	2800	9
N7	3	16	3	2600	12
N8	3	13	3	2340	7
N9	3	13	3	2060	6
N10	3	13	3	1800	5
S1	6	19	STR	1800	24
T1	3	16	STR	2900	14
T2	3	16	STR	3800	18
V1	2	13	STR	2140	4
V2	3	13	STR	1880	6
V3	2	13	STR	1640	3
V4	2	13	STR	1420	3
V5	2	13	STR	1180	2
V6	2	13	STR	2180	4
V7	3	13	STR	1980	6
V8	3	13	STR	1720	5
V9	3	13	STR	1440	4
V10	3	13	STR	1180	4
Z1	2	13	4	1600	3
Z2	3	13	4	1420	4
Z3	2	13	4	1260	3
Z4	2	13	4	1100	2
Z5	2	13	4	940	2
Z6	2	13	4	1620	3
Z7	3	13	4	1480	4
Z8	3	13	4	1300	4
Z9	3	13	4	1120	3
Z10	3	13	4	940	3

REINFORCING STEEL FOR 2 WING WALLS 280 kg

CLASS A CONCRETE
2 WINGS 6.5 m^3
1 HEADWALLS 0.5 m^3
1 END CURTAIN WALL 0.5 m^3
TOTAL 7.5 m^3

PROJECT NO. R-0609IA
GUILFORD COUNTY
STATION: 45+88.000 -L-

SHEET 4 OF 5

STATE OF NORTH CAROLINA
DEPARTMENT OF TRANSPORTATION
RALEIGH

INLET WINGS FOR CONCRETE BOX CULVERT H=2.100m SLOPE=2:1 77° SKEW

NORTH CAROLINA PROFESSIONAL SEAL 23926 ENGINEER BRIAN C. HAWKS
3/22/06

REVISIONS							SHEET NO.
NO.	BY:	DATE:	NO.	BY:	DATE:		C-8
1			3				TOTAL SHEETS
2			4				9

DRAWN BY : J.L. WALTON DATE : 8/30/04
CHECKED BY : R.W. WRIGHT DATE : 9/30/04

15-MAY-2006 10:55
J:\STRUCT~1\frye\FINAL_~1\Str11\R-0609IA_sd_CU_11.dgn
rwwright

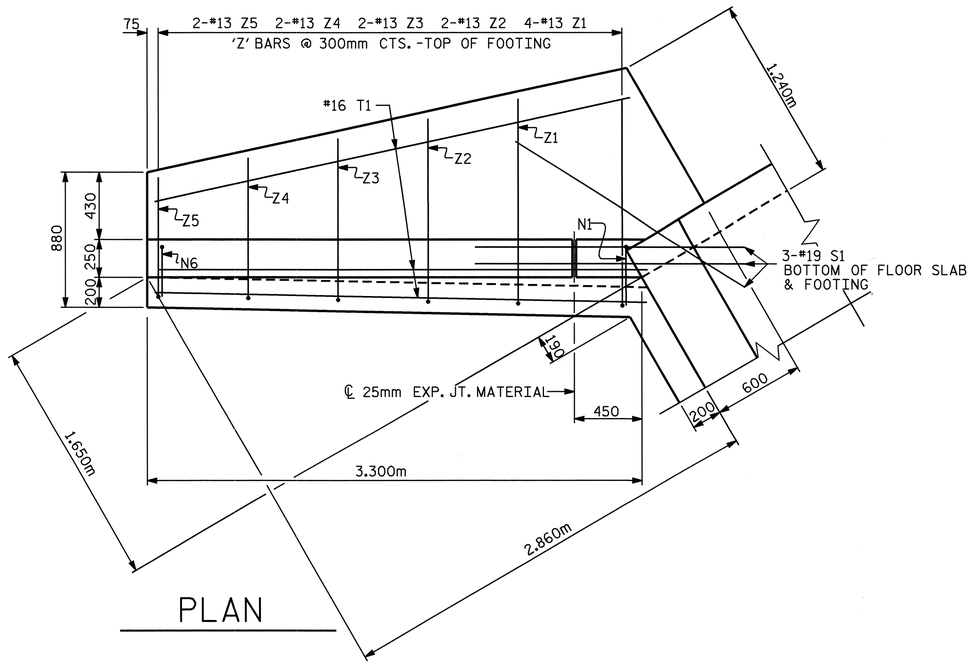

PLAN

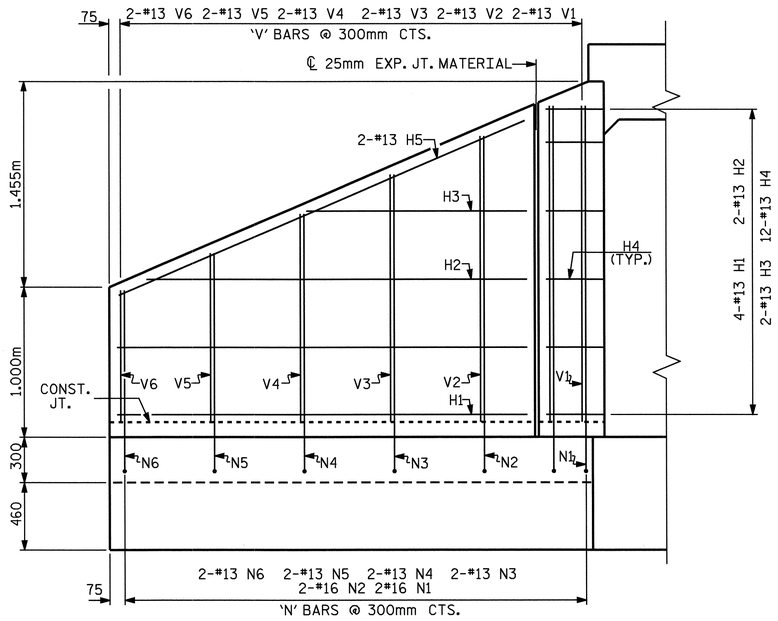

ELEVATION

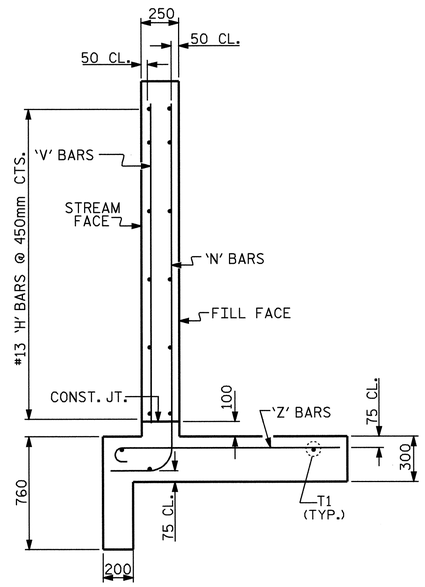

TYPICAL WING SECTION

BAR TYPES

ALL BAR DIMENSIONS ARE OUT TO OUT.

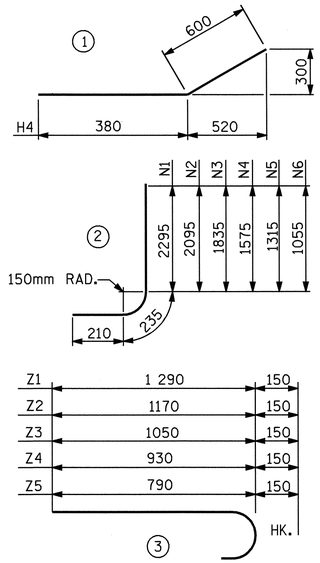

BILL OF MATERIAL (OUTLET WINGS)

BAR	NO.	SIZE	TYPE	LENGTH	WEIGHT
H1	8	13	STR	2740	22
H2	4	13	STR	2540	10
H3	4	13	STR	1520	6
H4	24	13	1	980	23
H5	4	13	STR	2980	12
N1	4	16	2	2740	17
N2	4	16	2	2540	16
N3	4	13	2	2280	9
N4	4	13	2	2020	8
N5	4	13	2	1760	7
N6	4	13	2	1500	6
S1	6	19	STR	1800	24
T1	6	16	STR	3300	31
V1	4	13	STR	2120	8
V2	4	13	STR	1920	8
V3	4	13	STR	1660	7
V4	4	13	STR	1400	6
V5	4	13	STR	1140	5
V6	4	13	STR	880	3
Z1	8	13	3	1440	11
Z2	4	13	3	1320	5
Z3	4	13	3	1200	5
Z4	4	13	3	1080	4
Z5	4	13	3	940	4

REINFORCING STEEL
FOR 2 WINGS 257 kg

CLASS A CONCRETE

2 WINGS	6.1	m^3
1 HEADWALL	0.5	m^3
1 END CURTAIN WALL	0.5	m^3
TOTAL	7.1	m^3

PROJECT NO. R-0609IA
GUILFORD COUNTY
STATION: 45+88.000 -L-

SHEET 5 OF 5

STATE OF NORTH CAROLINA
DEPARTMENT OF TRANSPORTATION
RALEIGH

OUTLET WINGS
FOR
CONCRETE BOX CULVERT
H= 2.100m SLOPE= 2 : 1
90° SKEW

NORTH CAROLINA PROFESSIONAL SEAL 23926 ENGINEER BRIAN C. HAWKS
5/22/06

REVISIONS							SHEET NO.
NO.	BY:	DATE:	NO.	BY:	DATE:		C-9
1			3				TOTAL SHEETS
2			4				9

ASSEMBLED BY : J.L. WALTON	DATE : 8/30/04
CHECKED BY : R.W. WRIGHT	DATE : 9/30/04
DRAWN BY : FPP 06/97	
CHECKED BY : VAP 06/97	

15-MAY-2006 10:55
J:\STRUCT~1\frye\FINAL_~1\Str11\R-0609IA_sd_CU_11.dgn
rwwright

STR #11

STD. NO. CW9021