9/09/99

TIP: R-0609IA

CONTRACT: C201275

STRUCTURES & CULVERTS

STATE OF NORTH CAROLINA
DIVISION OF HIGHWAYS

GUILFORD COUNTY

STATE	STATE PROJECT REFERENCE NO.	SHEET NO.	TOTAL SHEETS
N.C.	R-0609IA		

STATE PROJ. NO.	F. A. PROJ. NO.	DESCRIPTION
34345.1.1	MAF-F-119-1(1)	PE
34345.2.7	STP-NHF-119-1(11)	ROW & UTILITIES
34345.3.15	STP-NHF-119-1(15)	CONST.

LOCATION: *US 311 HIGH POINT EAST BELTWAY FROM US 29-70 TO I-85 NORTH OF ARCHDALE*

TYPE OF WORK: *GRADING, DRAINAGE, PAVING, SIGNING, CULVERTS, FENCING, STRUCTURES, AND I.T.S*

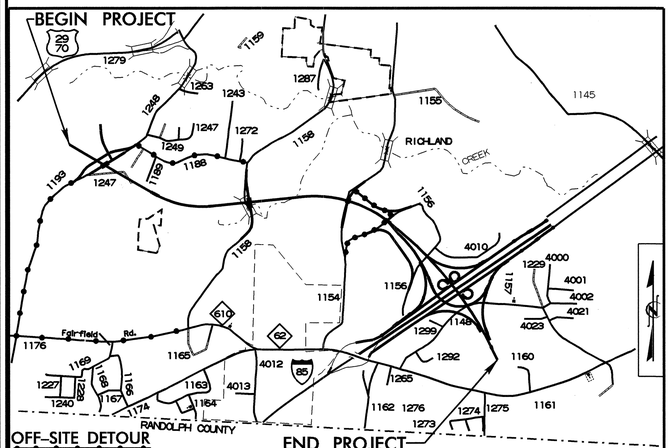

VICINITY MAP

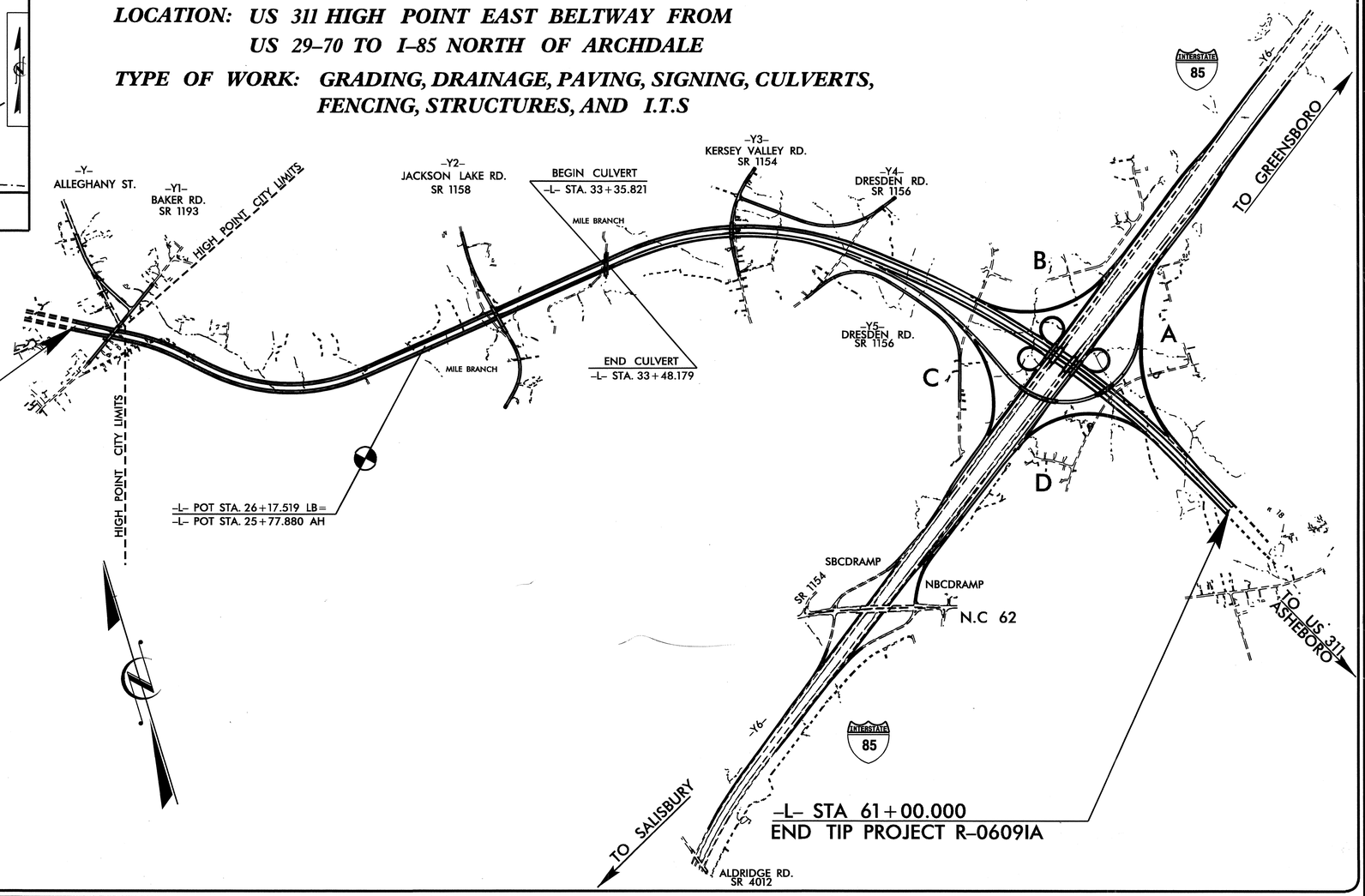

DESIGN DATA

ADT 2005	=	27,000
ADT 2025	=	39,000
DHV	=	10 %
D	=	60 %
T	=	13 % *
V	=	110 km/h

* TTST 7 % DUAL 6 %
FUNC CLASS – FREEWAY

PROJECT LENGTH

LENGTH ROADWAY TIP PROJECT R-0609IA	=	4.929 KM
LENGTH STRUCTURE TIP PROJECT R-0609IA	=	0.012 KM
TOTAL LENGTH TIP PROJECT R-0609IA	=	4.941 KM

DIVISION OF HIGHWAYS

2002 STANDARD SPECIFICATIONS

LETTING DATE:
APRIL 17, 2007

JOHN C. FRYE, P.E.
B. CHARLES HUNT, P.E.
PROJECT ENGINEER

BRIAN C. HANKS ,P.E.
VIPUL A. PATEL ,P.E.
PROJECT DESIGN ENGINEER

STRUCTURE DESIGN UNIT
1000 BIRCH RIDGE DR.
RALEIGH, NC 27610

NORTH CAROLINA PROFESSIONAL SEAL 14552 ENGINEER GREGORY R. PERFETTI

11-17-06

DIVISION OF HIGHWAYS
STATE OF NORTH CAROLINA

P.E.
STATE DESIGN ENGINEER

DEPARTMENT OF TRANSPORTATION
FEDERAL HIGHWAY ADMINISTRATION

APPROVED
DIVISION ADMINISTRATOR *DATE*

23-MAY-2006 07:10
\$\$\$\$\$\$\$\$\$\$\$\$\$\$\$\$\$\$DGN\$\$\$\$\$\$\$\$\$\$\$\$\$\$\$\$\$\$
tbanks

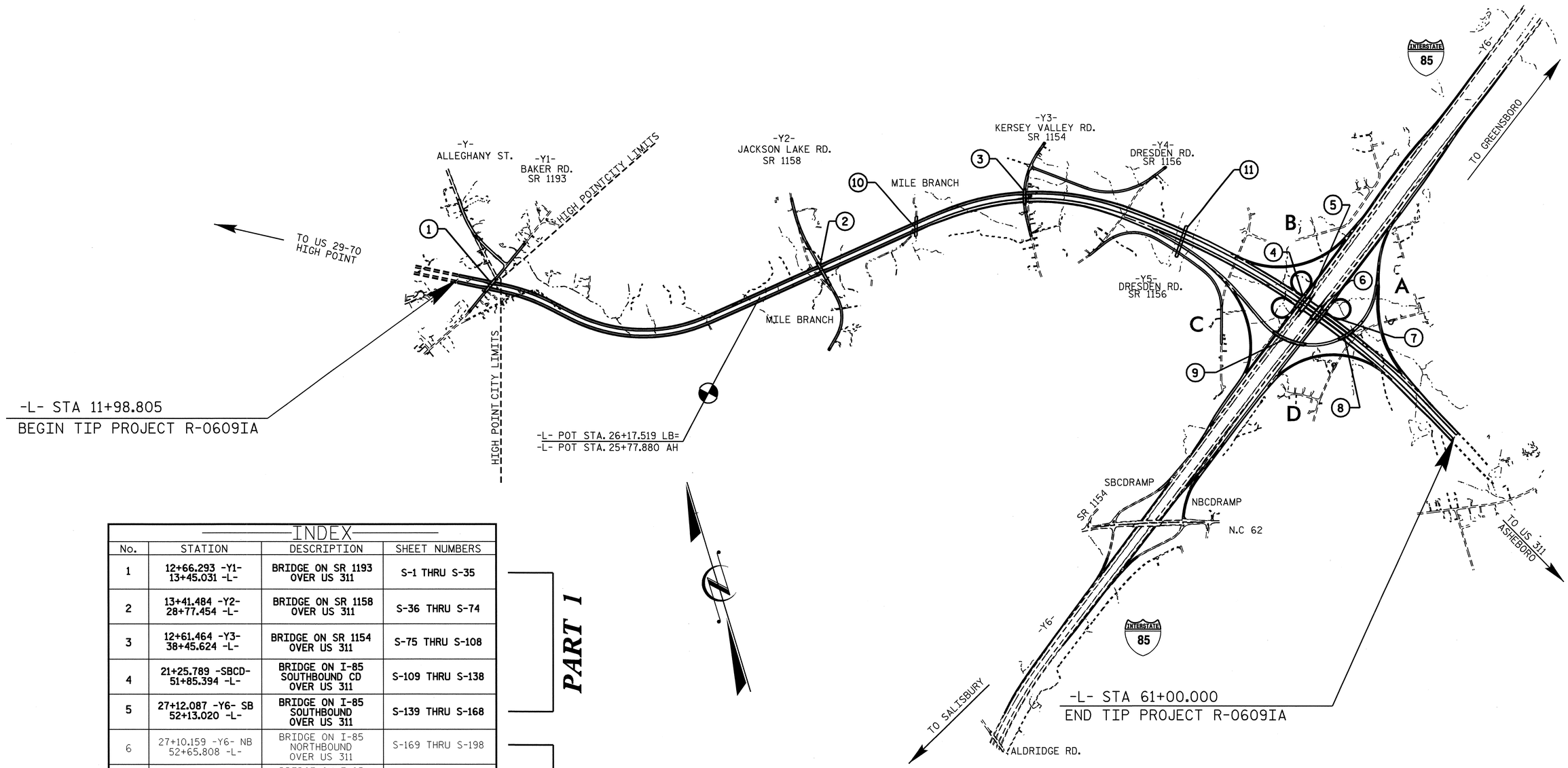

INDEX

No.	STATION	DESCRIPTION	SHEET NUMBERS	
1	12+66.293 -Y1- 13+45.031 -L-	BRIDGE ON SR 1193 OVER US 311	S-1 THRU S-35	PART 1
2	13+41.484 -Y2- 28+77.454 -L-	BRIDGE ON SR 1158 OVER US 311	S-36 THRU S-74	
3	12+61.464 -Y3- 38+45.624 -L-	BRIDGE ON SR 1154 OVER US 311	S-75 THRU S-108	
4	21+25.789 -SBCD- 51+85.394 -L-	BRIDGE ON I-85 SOUTHBOUND CD OVER US 311	S-109 THRU S-138	
5	27+12.087 -Y6- SB 52+13.020 -L-	BRIDGE ON I-85 SOUTHBOUND OVER US 311	S-139 THRU S-168	
6	27+10.159 -Y6- NB 52+65.808 -L-	BRIDGE ON I-85 NORTHBOUND OVER US 311	S-169 THRU S-198	PART 2
7	21+32.418 -NBCD- 52+93.640 -L-	BRIDGE ON I-85 NORTHBOUND CD OVER US 311	S-199 THRU S-228	
8	22+01.765 -FLY- 54+36.375 -L-	BRIDGE ON FLYOVER OVER US 311	S-229 THRU S-265	
9	19+26.763 -FLY- 28+85.399 -Y6-	BRIDGE ON FLYOVER OVER I-85	S-266 THRU S-321	
10	33+42.000 -L-	TRIPLE 3.400m X 2.400m RCBC	C-1 THRU C-4	
11	45+88.000 -L-	SINGLE 3.700m X 2.100m RCBC	C-5 THRU C-9	

PART 1 OF 2

PROJECT NO. R-0609IA

GUILFORD COUNTY

STATE OF NORTH CAROLINA
DEPARTMENT OF TRANSPORTATION
RALEIGH

INDEX

REVISIONS						
NO.	BY:	DATE:	NO.	BY:	DATE:	
1			3			
2			4			

23-MAY-2006 07:31
R:\STRUCT~1\frye\FINAL_~1\R0609I~1.DGN
bhanks

F.A. PROJECT NO: STP-NHF-119-1(15)

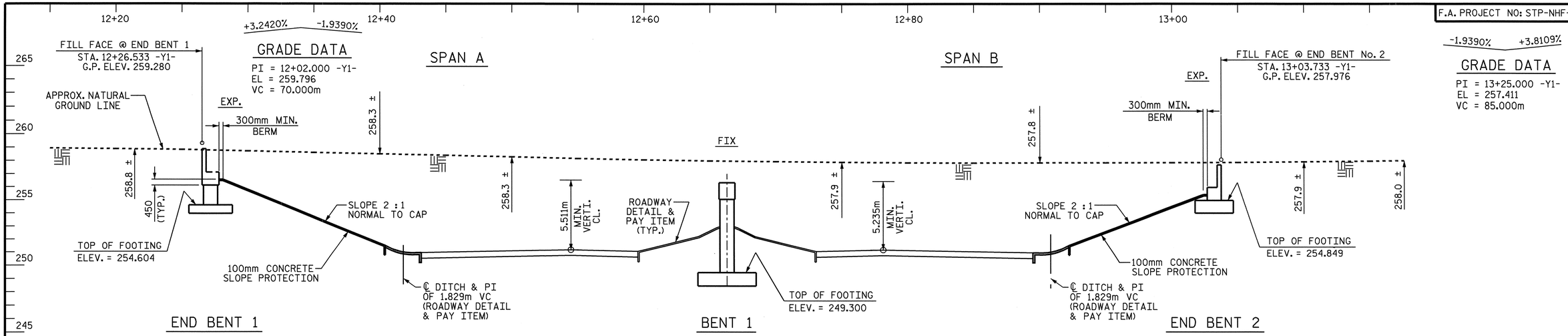

SECTION ALONG -Y1-

(SECTION THRU END BENTS AND BENT IS TAKEN AT RIGHT ANGLES)

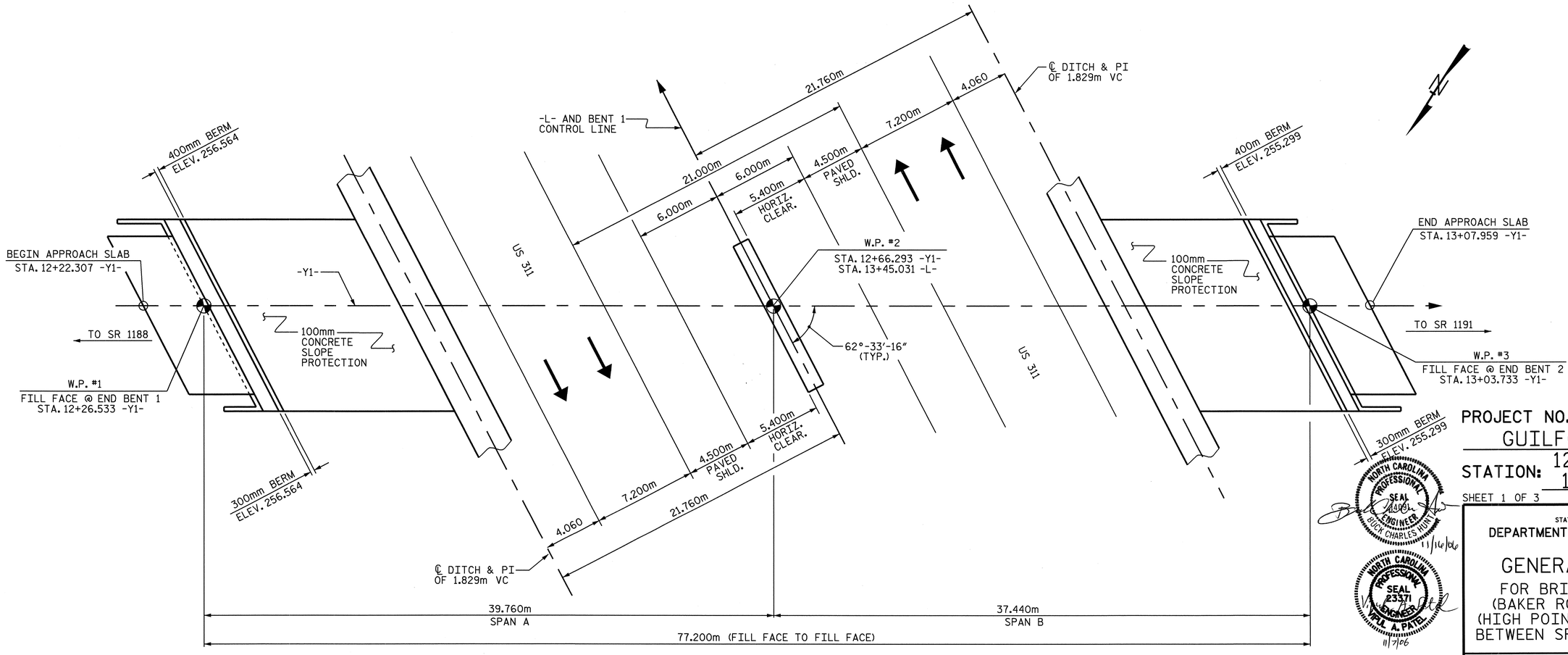

PLAN

PROJECT NO. R-0609 IA

GUILFORD COUNTY

STATION: 12+66.293 -Y1-
13+45.031 -L-

SHEET 1 OF 3 BRIDGE No. 971

NORTH CAROLINA PROFESSIONAL SEAL 14091 ENGINEER BUCK CHARLES HUNT 11/16/06

NORTH CAROLINA PROFESSIONAL SEAL 23371 ENGINEER VIPUL A. PATEL 11/7/06

STATE OF NORTH CAROLINA
DEPARTMENT OF TRANSPORTATION
RALEIGH

GENERAL DRAWING

FOR BRIDGE ON SR 1193
(BAKER ROAD) OVER US 311
(HIGH POINT EAST BELTWAY)
BETWEEN SR 1188 AND SR 1191

REVISIONS						SHEET NO.
NO.	BY:	DATE:	NO.	BY:	DATE:	S-1
1			3			TOTAL SHEETS
2			4			00

DRAWN BY : A. K. PATEL DATE : 2/22/05
CHECKED BY : M. K. BEARD DATE : 03/05

07-NOV-2006 08:29
R:\Structures\FinalPlans\Str1\R0609IA_sd_GD_01.dgn
kbeard

STR. #1

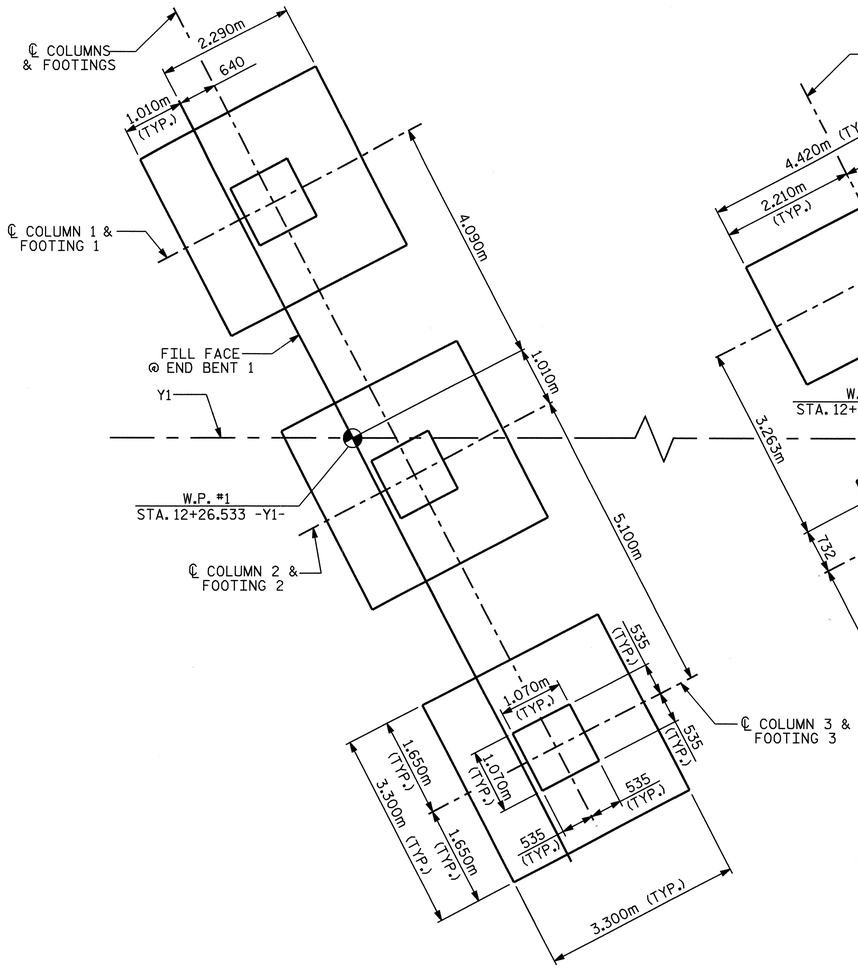

END BENT 1

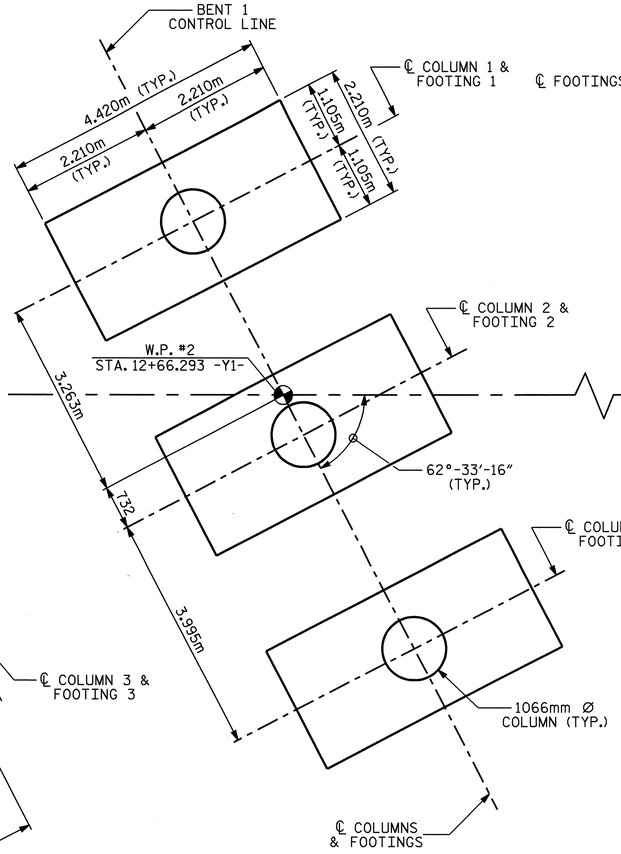

BENT 1

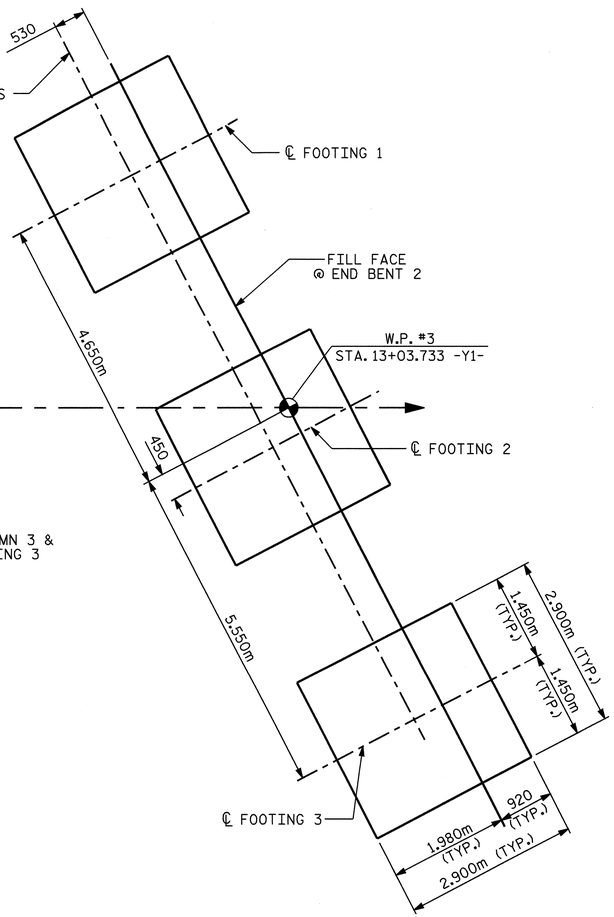

END BENT 2

FOUNDATION LAYOUT

NOTES

THE REQUIRED BEARING CAPACITY OF THE SPREAD FOOTINGS AT END BENT 1 & END BENT 2 IS 380 kPa. THE REQUIRED BEARING CAPACITY SHALL BE VERIFIED.

THE REQUIRED BEARING CAPACITY OF THE SPREAD FOOTINGS AT BENT 1 IS 480 kPa. THE REQUIRED BEARING CAPACITY SHALL BE VERIFIED.

NORTH CAROLINA PROFESSIONAL SEAL 23371 ENGINEER ANIL A. PATEL
5/22/06

PROJECT NO. R-0609 IA
GUILFORD COUNTY
STATION: 12+66.293 -Y1-
13+45.031 -L-
SHEET 2 OF 3

STATE OF NORTH CAROLINA
DEPARTMENT OF TRANSPORTATION
RALEIGH

GENERAL DRAWING
FOR BRIDGE ON SR 1193
(BAKER ROAD) OVER US 311
(HIGH POINT EAST BELTWAY)
BETWEEN SR 1188 AND SR 1191

REVISIONS						SHEET NO.
NO.	BY:	DATE:	NO.	BY:	DATE:	S-2
1			3			TOTAL SHEETS
2			4			321

DRAWN BY : A. K. PATEL DATE : 2/22/05
CHECKED BY : M. K. BEARD DATE : 03/05

22-MAY-2006 09:01
T:\Structures\Final Plans\Str\R0609IA_sd_GD_01.dgn
klayne

STR. #1

BM#1: R/R SPIKE IN 250mm HICKORY -BL- STA 12+61.000 71 M RT. ELEV. 238.940

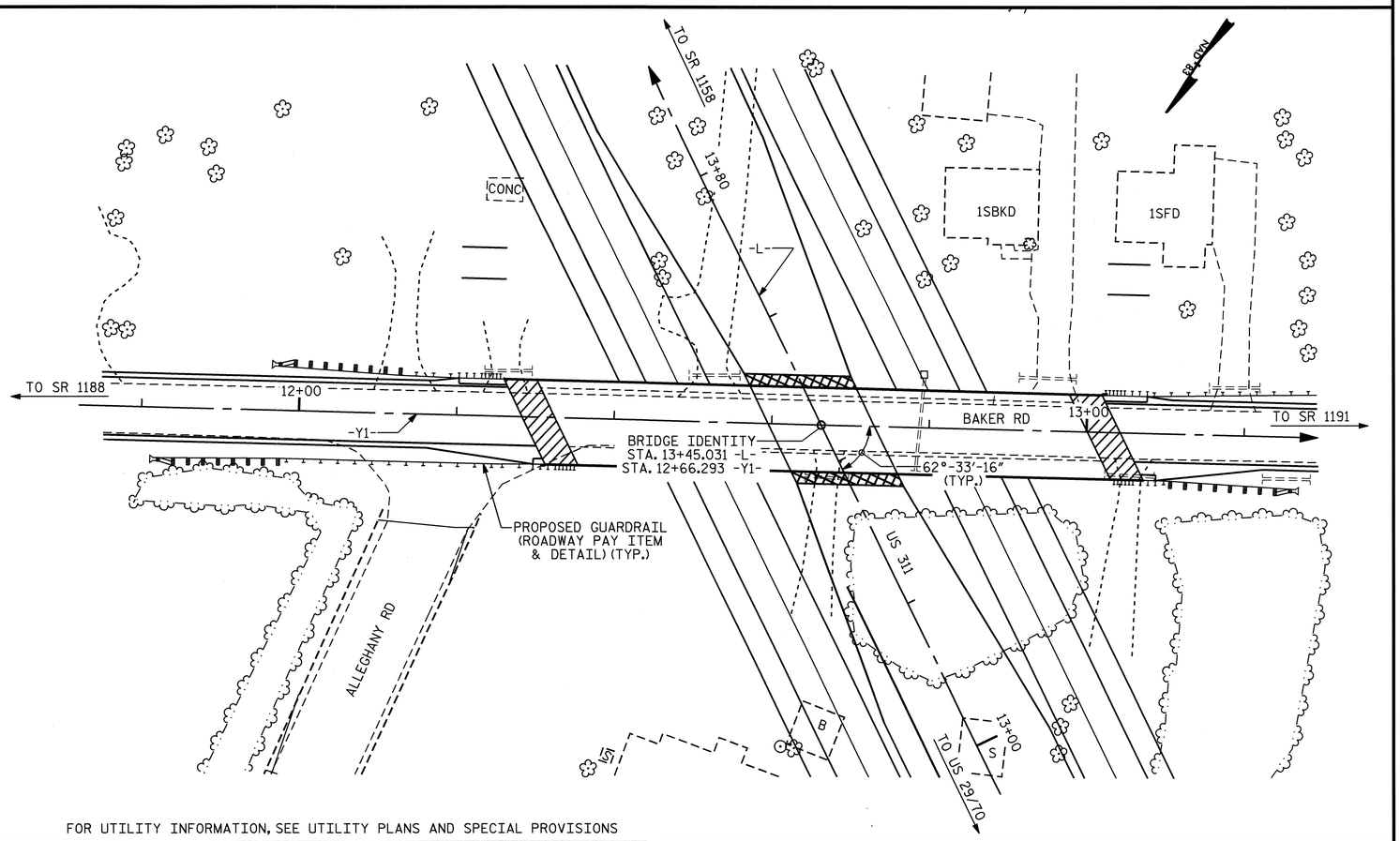

FOR UTILITY INFORMATION, SEE UTILITY PLANS AND SPECIAL PROVISIONS

LOCATION SKETCH

NOTES

ALL DIMENSIONS ARE IN MILLIMETERS UNLESS OTHERWISE NOTED.

ALL ELEVATIONS ARE IN METERS.

ASSUMED LIVE LOAD = MS 18 OR ALTERNATE LOADING.

THIS BRIDGE HAS BEEN DESIGNED IN ACCORDANCE WITH THE REQUIREMENTS OF THE AASHTO STANDARD SPECIFICATIONS FOR SEISMIC DESIGN OF HIGHWAY BRIDGES FOR SEISMIC PERFORMANCE CATEGORY A.

FOR OTHER DESIGN DATA AND GENERAL NOTES, SEE SHEET SNSM.

THIS BRIDGE HAS BEEN DESIGNED BY THE STRENGTH DESIGN METHOD AS SPECIFIED IN AASHTO STANDARD SPECIFICATIONS.

ALL STRUCTURAL STEEL SHALL BE AASHTO M270 GRADE 345W AND PAINTED IN ACCORDANCE WITH SYSTEM 4 OF ARTICLE 442-7 OF THE STANDARD SPECIFICATIONS UNLESS OTHERWISE NOTED ON THE PLANS.

REMOVABLE FORMS MAY BE USED IN LIEU OF METAL STAY-IN-PLACE FORMS IN ACCORDANCE WITH ARTICLE 420-3 OF THE STANDARD SPECIFICATIONS.

WORK SHALL NOT BE STARTED ON THIS BRIDGE UNTIL ROADWAY SECTION HAS BEEN EXCAVATED.

THE CLASS AA CONCRETE IN THE BRIDGE DECK SHALL CONTAIN FLY ASH OR GROUND GRANULATED BLAST FURNACE SLAG AT THE SUBSTITUTION RATE SPECIFIED IN ARTICLE 1024-1 AND IN ACCORDANCE WITH ARTICLES 1024-5 AND 1024-6 OF THE STANDARD SPECIFICATIONS. NO PAYMENT WILL BE MADE FOR THIS SUBSTITUTION AS IT IS CONSIDERED INCIDENTAL TO THE COST OF THE REINFORCED CONCRETE DECK SLAB.

THE CONTRACTOR SHALL PROVIDE INDEPENDENT ASSURANCE SAMPLES OF REINFORCING STEEL AS FOLLOWS: FOR PROJECTS REQUIRING UP TO 360,000 kg OF REINFORCING STEEL, ONE 760mm SAMPLE OF EACH SIZE BAR USED, AND FOR PROJECTS REQUIRING OVER 360,000 kg OF REINFORCING STEEL, TWO 760mm SAMPLES OF EACH SIZE BAR USED. THE BARS FROM WHICH THE SAMPLES ARE TAKEN MUST THEN BE SPLICED WITH REPLACEMENT BARS OF THE SIZE AND LENGTH OF THE SAMPLE PLUS A MINIMUM LAP SPLICE OF THIRTY BAR DIAMETERS.

NEEDLE BEAMS WILL NOT BE ALLOWED UNLESS OTHERWISE CALLED FOR ON THE PLANS OR APPROVED BY THE ENGINEER.

FOR SUBMITTAL OF WORKING DRAWINGS, SEE SPECIAL PROVISIONS.

FOR METRIC STRUCTURAL STEEL, SEE SPECIAL PROVISIONS.

FOR FALSEWORK AND FORMWORK, SEE SPECIAL PROVISIONS.

FOR CRANE SAFETY, SEE SPECIAL PROVISIONS.

TOTAL BILL OF MATERIAL

	FOUNDATION EXCAVATION	REINFORCED CONCRETE DECK SLAB	GROOVING BRIDGE FLOORS	CLASS A CONCRETE	BRIDGE APPROACH SLABS	REINFORCING STEEL	SPIRAL COLUMN REINFORCING STEEL	STRUCTURAL STEEL	TWO BAR METAL RAIL	355mm X 915mm CONCRETE PARAPET	100mm SLOPE PROTECTION	POT BEARINGS	ELASTOMERIC BEARINGS	EVAZOTE JOINT SEALS
	LUMP SUM	SQ. METERS	SQ. METERS	CU. METERS	LUMP SUM	kg	kg	kg	METERS	METERS	SQ. METERS	LUMP SUM	LUMP SUM	LUMP SUM
SUPERSTRUCTURE		864.3	923.7		LUMP SUM			165850	147.9	152.9		LUMP SUM	LUMP SUM	LUMP SUM
END BENT 1	LUMP SUM			57.2		4516					203			
BENT 1	LUMP SUM			62.5		6110	724							
END BENT 2	LUMP SUM			50.1		2941					168			
TOTAL	LUMP SUM	864.3	923.7	169.8	LUMP SUM	13567	724	165850	147.9	152.9	371	LUMP SUM	LUMP SUM	LUMP SUM

NORTH CAROLINA PROFESSIONAL SEAL 23371 ENGINEER PRIL A. PATEL
5/22/06

PROJECT NO. R-0609 IA
GUILFORD COUNTY
STATION: 12+66.293 -Y1-
13+45.031 -L-
SHEET 3 OF 3

STATE OF NORTH CAROLINA
DEPARTMENT OF TRANSPORTATION
RALEIGH

GENERAL DRAWING

FOR BRIDGE ON SR 1193
(BAKER ROAD) OVER US 311
(HIGH POINT EAST BELTWAY)
BETWEEN SR 1188 AND SR 1191

REVISIONS						SHEET NO.
NO.	BY:	DATE:	NO.	BY:	DATE:	S-3
1			3			TOTAL SHEETS
2			4			321

DRAWN BY : A. K. PATEL DATE : 2/22/05
CHECKED BY : M. K. BEARD DATE : 03/05

22-MAY-2006 09:00
T:\Structures\Final Plans\Str\R0609IA_sd_GD_01.dgn
klayne

STR. #1

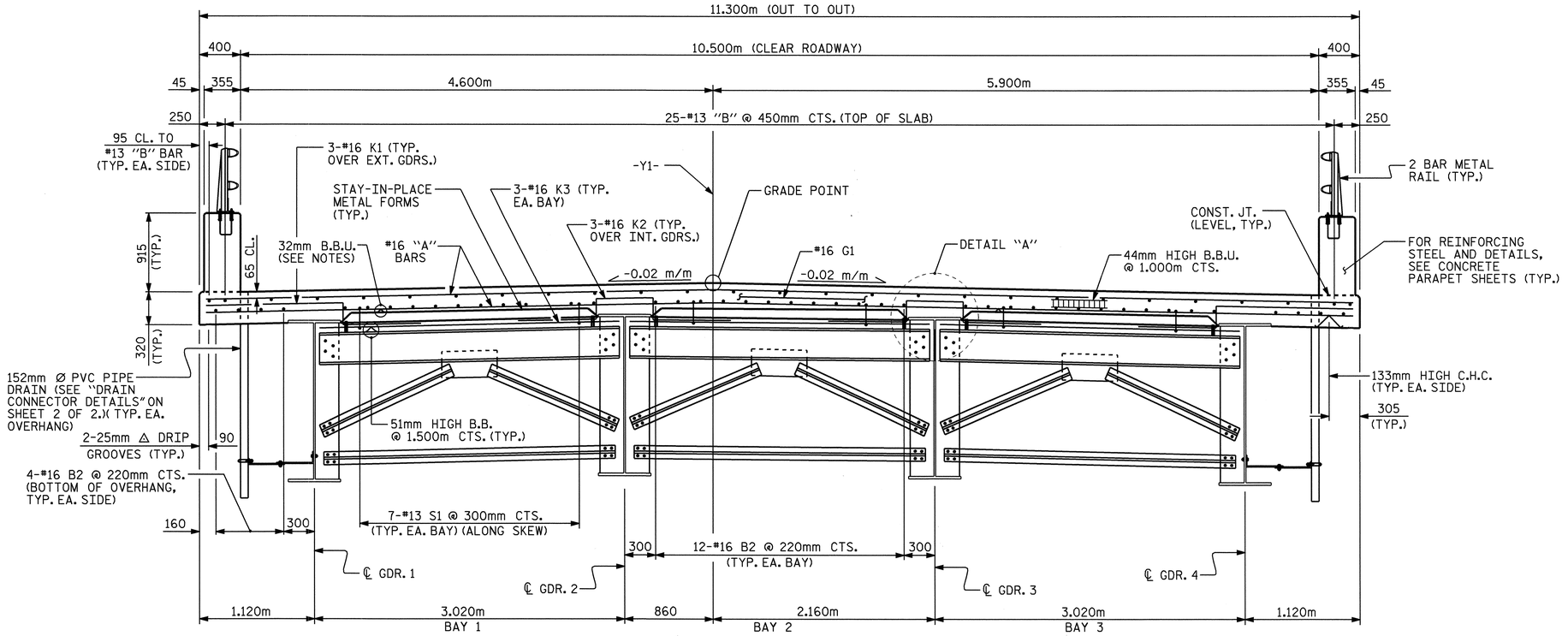

END BENT DIAPHRAGM TYPICAL SECTION

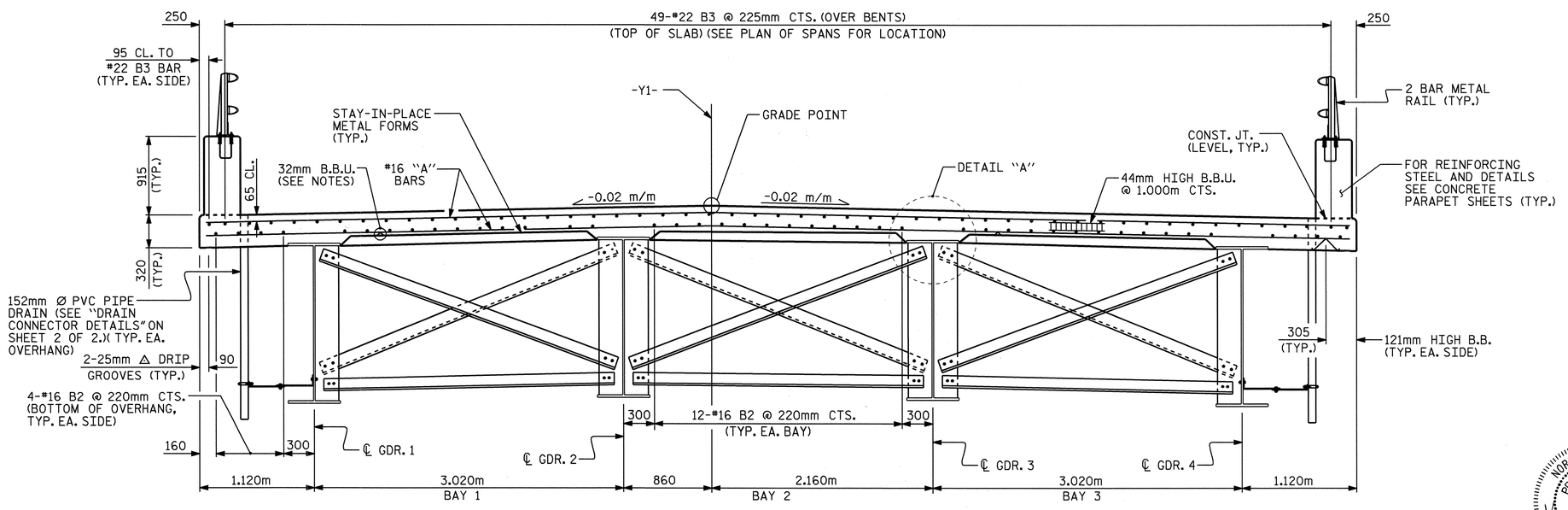

PARTIAL BENT DIAPHRAGM TYPICAL SECTIONS

PARTIAL INTERMEDIATE DIAPHRAGM TYPICAL SECTIONS

(CROSSFRAME DIAPHRAGM TYPICAL FOR ALL BAYS)

NOTES

PROVIDE 32mm HIGH BEAM BOLSTERS UPPER AT 1.200m CTS. ATOP THE METAL STAY-IN-PLACE FORMS TO SUPPORT THE BOTTOM MAT OF 'A' BARS. WHEN USING REMOVABLE FORMS, PROVIDE CONTINUOUS HIGH CHAIRS FOR METAL DECK (C.H.C.M.) @ 1.200m CTS. WITH A HEIGHT TO SUPPORT THE BOTTOM MAT OF 'A' BARS A CLEAR DISTANCE OF 65mm ABOVE THE TOP OF THE REMOVABLE FORM.

PARAPET IN A CONTINUOUS UNIT SHALL NOT BE CAST UNTIL ALL SLAB CONCRETE IN THE UNIT HAS BEEN CAST AND HAS REACHED A MINIMUM COMPRESSIVE STRENGTH OF 20.7 MPa.

THE CONTRACTOR MAY, WHEN NECESSARY, PROPOSE A SCHEME FOR AVOIDING INTERFERENCE BETWEEN METAL STAY-IN-PLACE FORM SUPPORTS OR FORMS AND BEAM/GIRDER STIFFENERS OR CONNECTOR PLATES. THE PROPOSAL SHALL BE INDICATED, AS APPROPRIATE, ON EITHER THE STEEL WORKING DRAWINGS OR THE METAL STAY-IN-PLACE FORM WORKING DRAWINGS.

PREVIOUSLY CAST CONCRETE IN A CONTINUOUS UNIT SHALL HAVE ATTAINED A MINIMUM COMPRESSIVE STRENGTH OF 20.7 MPa BEFORE ADDITIONAL CONCRETE IS CAST IN THE UNIT.

THE CONTRACTOR SHALL ADJUST THE GIRDER BUILDUPS AS NECESSARY TO INCORPORATE A MAXIMUM PERMISSABLE VARIATION IN POT BEARING DEPTH OF 13mm, SEE SPECIAL PROVISIONS FOR POT BEARINGS.

STRUCTURAL STEEL ERECTION IN A CONTINUOUS UNIT SHALL BE COMPLETE BEFORE FALSEWORK OR FORMS ARE PLACED ON THE UNIT.

METAL STAY-IN-PLACE FORMS SHALL NOT BE WELDED TO BEAM OR GIRDER FLANGES IN THE ZONES REQUIRING CHARPY V-NOTCH TEST. SEE STRUCTURAL STEEL DETAIL SHEETS.

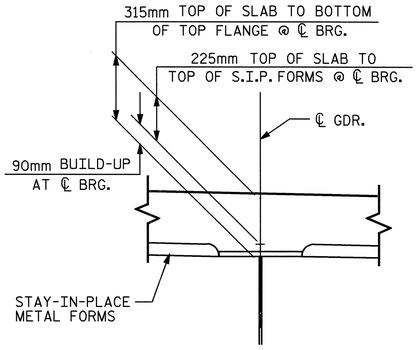

DETAIL "A"

PROJECT NO. R-0609IA

GUILFORD COUNTY

STATION: 13+45.031-L-

SHEET 1 OF 2

STATE OF NORTH CAROLINA
DEPARTMENT OF TRANSPORTATION
RALEIGH

SUPERSTRUCTURE

TYPICAL SECTION

REVISIONS						SHEET NO.
NO.	BY:	DATE:	NO.	BY:	DATE:	S-4
1			3			TOTAL SHEETS
2			4			321

STR. #1

NORTH CAROLINA PROFESSIONAL SEAL 23371 ENGINEER VIPUL A. PATEL
5/22/06

DRAWN BY : M.K. BEARD DATE : 05/28/04
CHECKED BY : S.H. SOCKWELL DATE : 10/04

22-MAY-2006 09:04
T:\Structures\Final Plans\Str\R-0609IA_sd_TS_01.dgn
klayne

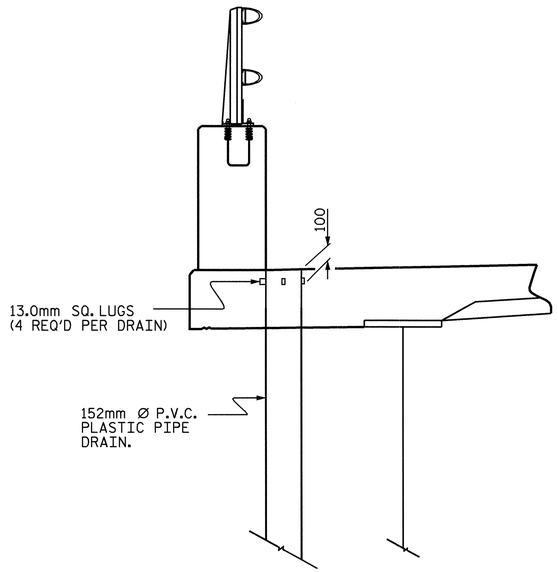

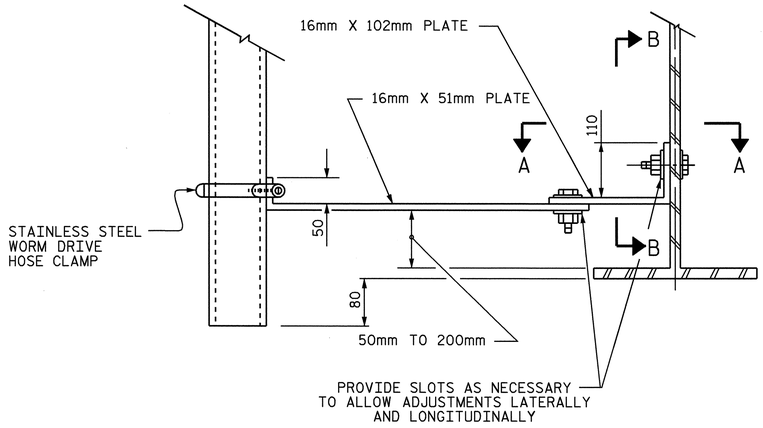

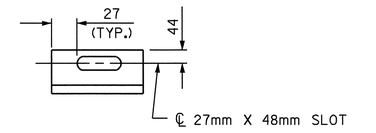

SECTION B-B

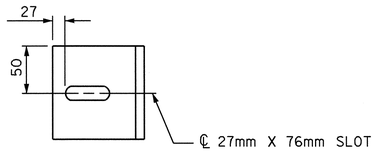

SECTION A-A

NOTES:

BOLT SIZE FOR PIPE DRAIN BRACKETS TO BE SAME AS DIAPHRAGMS AND CROSSFRAME CONNECTIONS. STAINLESS STEEL WORM DRIVE HOSE CLAMP SHALL BE COMMERCIAL QUALITY.

PLATES FOR PIPE DRAIN BRACKETS SHALL CONFORM TO AASHTO M270 GRADE 250 STEEL OR APPROVED EQUAL.

PVC DECK DRAINS SHALL BE PAINTED WITH TWO COATS OF BROWN PRIMER MEETING THE REQUIREMENTS OF ARTICLE 1080-12 OF THE STANDARD SPECIFICATIONS. EACH COAT SHALL BE 0.050mm THICK. DECK DRAINS SHALL BE ROUGHENED PRIOR TO PAINTING. NO SEPARATE PAYMENT SHALL BE MADE FOR PAINTING PVC DECK DRAINS AS THIS IS CONSIDERED INCIDENTAL TO THE PAY ITEM FOR REINFORCED CONCRETE DECK SLAB.

TOP OF FLOOR DRAIN TO BE SET 10mm BELOW SURFACE OF SLAB.

4 - 13mm SQUARE LUGS TO BE GLUED TO THE PVC PLASTIC PIPE AT EQUAL SPACES AROUND THE PIPE DRAIN APPROXIMATELY 100mm FROM THE TOP OF THE PIPE.

COUPLING IN DRAIN PIPE WILL BE PERMITTED AS APPROVED BY THE ENGINEER.

THE 152mm DIA. PVC PIPE AND FITTINGS SHALL BE SCHEDULE 40 AND CONFORM TO ASTM D1785.

DRAIN CONNECTOR DETAILS

(21 ASSEMBLIES REQUIRED)

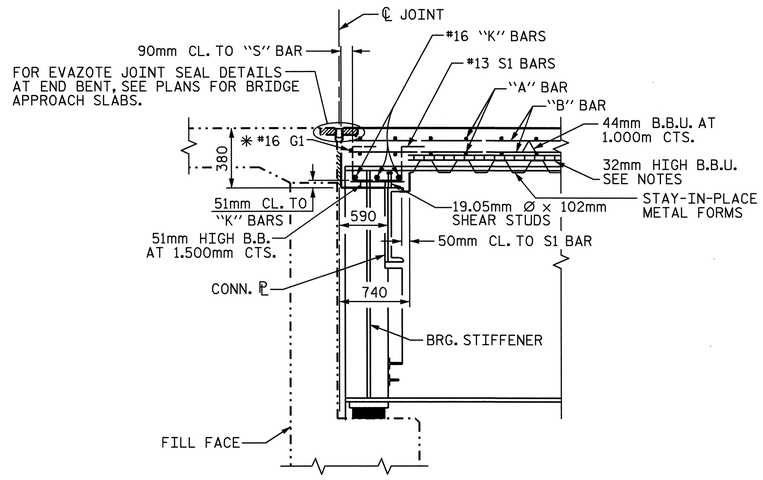

SECTION THRU END BENT

* #16 "G" BAR MAY BE SHIFTED SLIGHTLY, AS NECESSARY, TO CLEAR DIAPHRAGM AND REINFORCING STEEL.

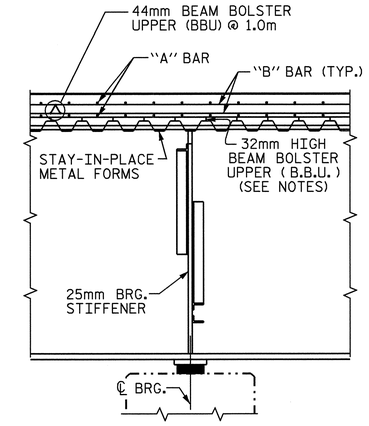

SECTION AT BENT

PROJECT NO. R-0609IA

GUILFORD COUNTY

STATION: 13+45.031 -L-

SHEET 2 OF 2

STATE OF NORTH CAROLINA
DEPARTMENT OF TRANSPORTATION
RALEIGH

SUPERSTRUCTURE

TYPICAL SECTION

NORTH CAROLINA PROFESSIONAL SEAL 23371 ENGINEER VIPUL A. PATEL
11/7/06

REVISIONS						SHEET NO.
NO.	BY:	DATE:	NO.	BY:	DATE:	S-5
1			3			TOTAL SHEETS
2			4			321

DRAWN BY : M.K. BEARD DATE : 09/20/04
CHECKED BY : S.H. SOCKWELL DATE : 10/04

07-NOV-2006 09:19
R:\Structures\Final Plans\Str1\R-0609IA_sd_TS_01.dgn
kbeard

STR. #1

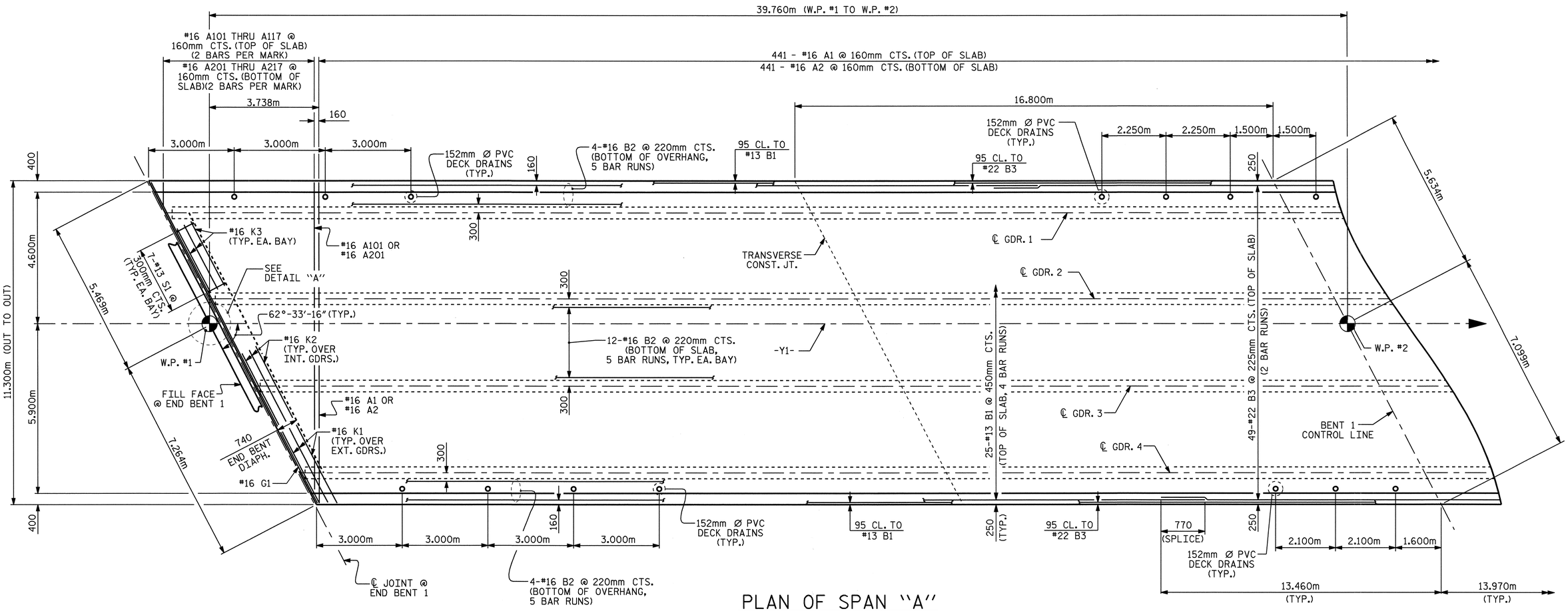

PLAN OF SPAN "A"

FOR CONCRETE PARAPET REINFORCING STEEL & DETAILS, SEE CONCRETE PARAPET AND RAIL END POST DETAILS SHEET.

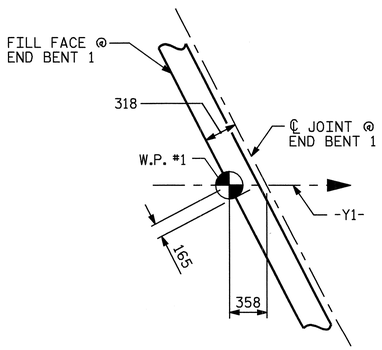

DETAIL "A"

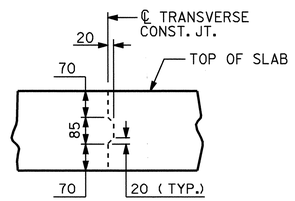

TRANSVERSE CONSTRUCTION JOINT DETAIL

NOTE: REINFORCING STEEL IN SLAB NOT SHOWN. LONGITUDINAL REINFORCING STEEL SHALL BE CONTINUOUS THRU JOINT.

PROJECT NO. R-0609IA

GUILFORD COUNTY

STATION: 13+45.031-L-

SHEET 1 OF 2

STATE OF NORTH CAROLINA
DEPARTMENT OF TRANSPORTATION
RALEIGH

SUPERSTRUCTURE

PLAN OF SPAN "A"

NORTH CAROLINA PROFESSIONAL SEAL 23371 ENGINEER VIPUL A. PATEL
5/22/06

REVISIONS						SHEET NO.
NO.	BY:	DATE:	NO.	BY:	DATE:	S-6
1			3			TOTAL SHEETS
2			4			321

DRAWN BY : M.K. BEARD DATE : 09/23/04
CHECKED BY : S.H. SOCKWELL DATE : 10/04

22-MAY-2006 08:46
T:\Structures\Final Plans\Str\R-0609IA_sd_PS_01.dgn
klayne

STR. #1

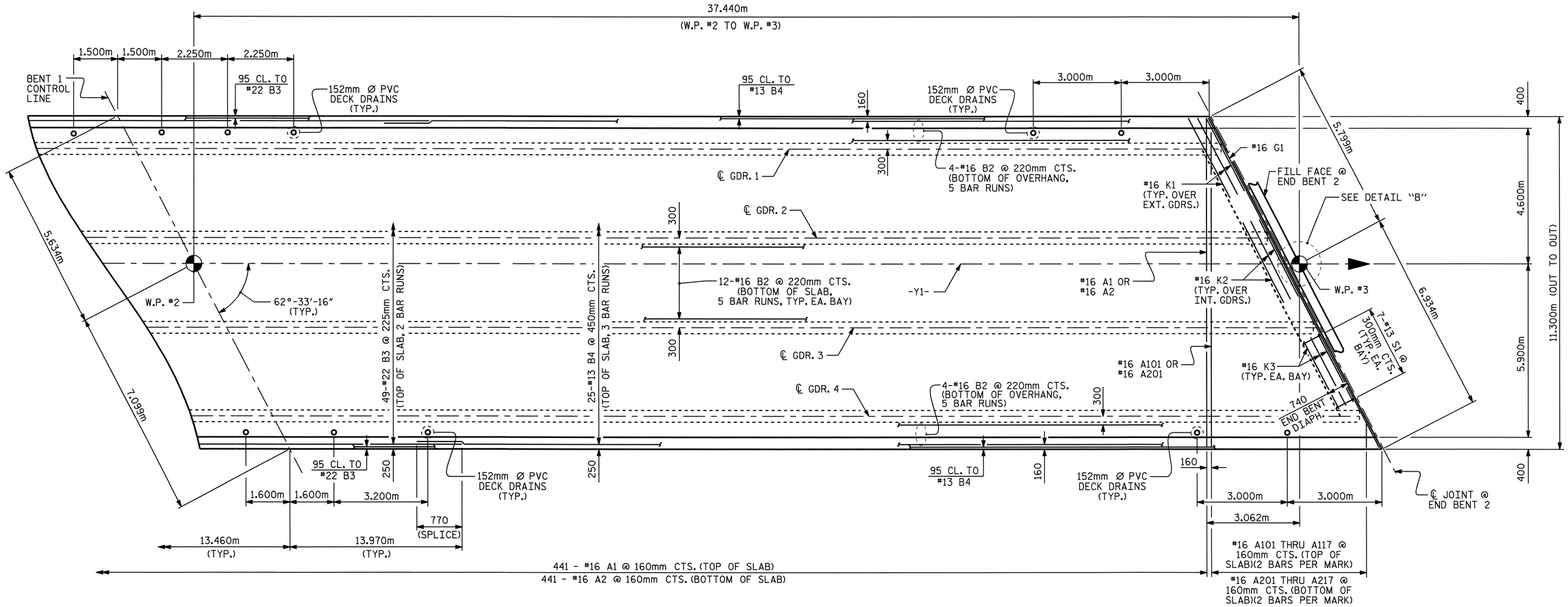

PLAN OF SPAN "B"

FOR CONCRETE PARAPET REINFORCING STEEL & DETAILS, SEE CONCRETE PARAPET AND RAIL END POST DETAILS SHEET.

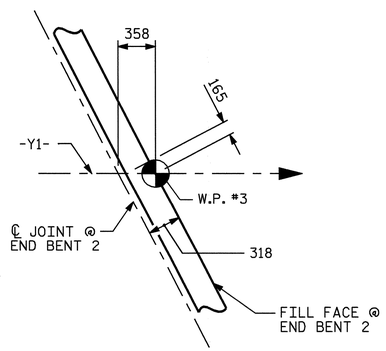

DETAIL "B"

PROJECT NO. R-0609IA

GUILFORD COUNTY

STATION: 13+45.031-L-

SHEET 2 OF 2

NORTH CAROLINA PROFESSIONAL SEAL 23371 ENGINEER VIRAL A. PATEL
5/22/06

STATE OF NORTH CAROLINA
DEPARTMENT OF TRANSPORTATION
RALEIGH

SUPERSTRUCTURE

PLAN OF SPAN "B"

REVISIONS						SHEET NO.
NO.	BY:	DATE:	NO.	BY:	DATE:	S-7
1			3			TOTAL SHEETS
2			4			321

DRAWN BY : M.K. BEARD DATE : 09/23/04
CHECKED BY : S.H. SOCKWELL DATE : 10/04

22-MAY-2006 08:46
T:\Structures\Final Plans\Str\R-0609IA_sd_PS_01.dgn
klayne

STR. #1

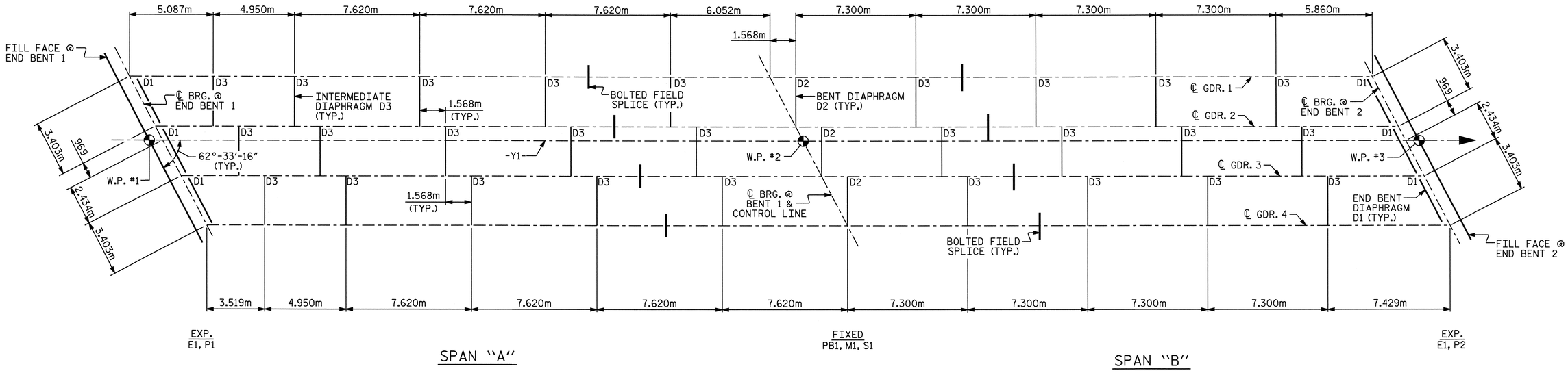

FRAMING PLAN

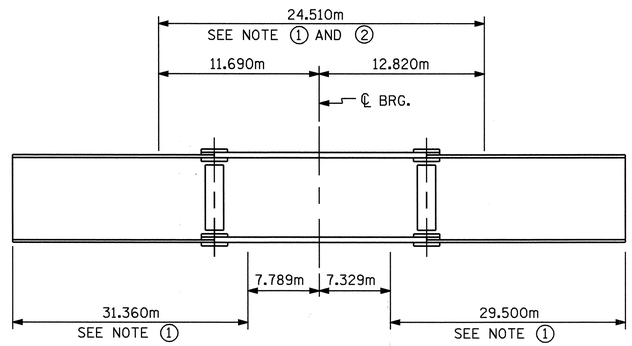

GIRDER MAKE UP

NOTE ① : CHARPY V-NOTCH TESTS WILL BE REQUIRED FOR ALL TOP OR BOTTOM FLANGE PLATES WHICH FALL WITHIN THESE LIMITS, ALL WEB PLATES, AND ALL SPLICE PLATES. IF A PERMITTED SHOP FLANGE SPLICE IS NOT USED, CHARPY V-NOTCH TESTS WILL BE REQUIRED FOR THE ENTIRE FLANGE PLATE. FOR CHARPY V-NOTCH TESTS, SEE ARTICLE 1072-9 OF THE STANDARD SPECIFICATIONS.

NOTE ② : NO WELDING OF FORMS OR FALSEWORK TO THE TOP FLANGE WILL BE PERMITTED IN THIS REGION.

CHARPY V-NOTCH TESTS FOR CONTINUOUS PLATE GIRDERS

NORTH CAROLINA PROFESSIONAL SEAL 23371 ENGINEER VIPUL A. PATEL
5/22/06

PROJECT NO. R-06091A
GUILFORD COUNTY
STATION: 13+45.031-L-

STATE OF NORTH CAROLINA
DEPARTMENT OF TRANSPORTATION
RALEIGH

SUPERSTRUCTURE

FRAMING PLAN

REVISIONS						SHEET NO.
NO.	BY:	DATE:	NO.	BY:	DATE:	S-8
1			3			TOTAL SHEETS
2			4			321

STR. #1

DRAWN BY : M.K. BEARD DATE : 06/24/04
CHECKED BY : S.H. SOCKWELL DATE : 10/04

22-MAY-2006 08:46
T:\Structures\Final Plans\Str\R-06091A_sd_FP_01.dgn
klayne

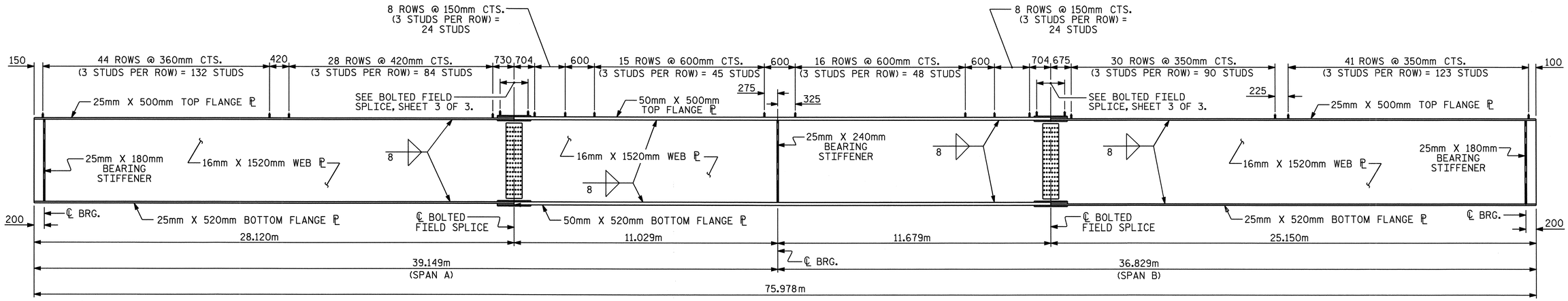

GIRDER ELEVATION

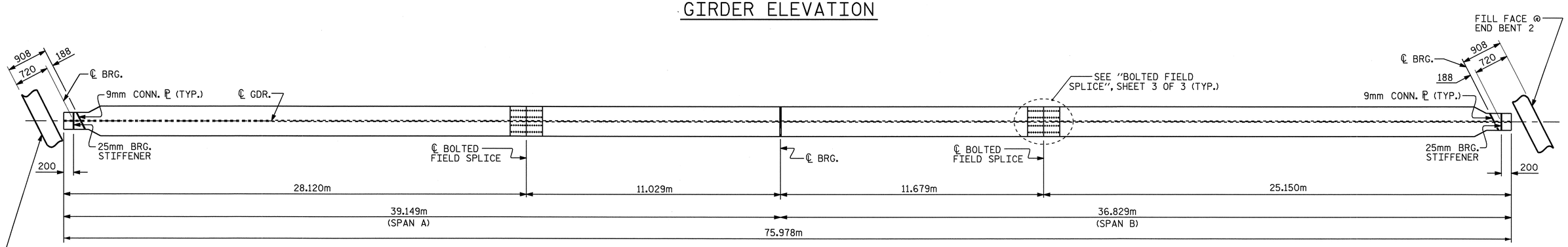

BOTTOM FLANGE DETAIL

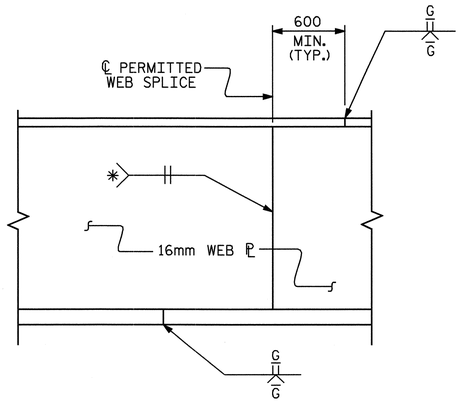

✳ GRIND SMOOTH AND FLUSH ON OUTER FACE OF EXTERIOR GIRDERS.

ELEVATION

PERMISSIBLE SHOP FLANGE & WEB SPLICE

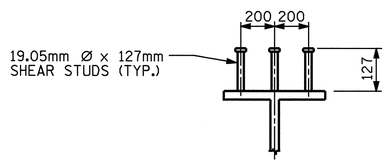

SHEAR STUD DETAILS

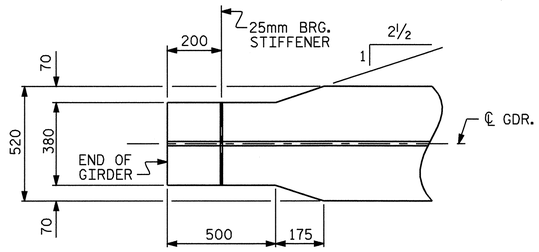

END OF GIRDER DETAIL

(BOTTOM FLANGE ONLY)

NORTH CAROLINA PROFESSIONAL SEAL 23371 ENGINEER VIPUL A. PATEL
5/12/06

PROJECT NO. R-0609IA
GUILFORD COUNTY
STATION: 13+45.031-L-

SHEET 1 OF 3

STATE OF NORTH CAROLINA
DEPARTMENT OF TRANSPORTATION
RALEIGH

SUPERSTRUCTURE

STRUCTURAL STEEL DETAILS

REVISIONS						SHEET NO.
NO.	BY:	DATE:	NO.	BY:	DATE:	S-9
1			3			TOTAL SHEETS
2			4			321

STR. #1

DRAWN BY : M.K. BEARD DATE : 06/28/04
CHECKED BY : S.H. SOCKWELL DATE : 10/04

22-MAY-2006 08:47
T:\Structures\Final Plans\Str\R-0609IA_sd_SS_01.dgn

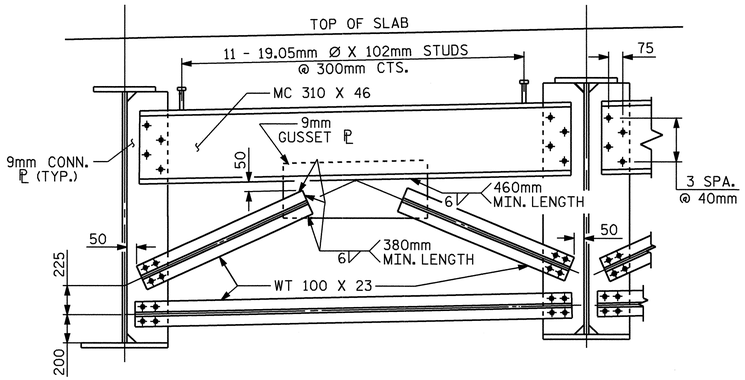

TYPICAL END BENT DIAPHRAGM (D1)

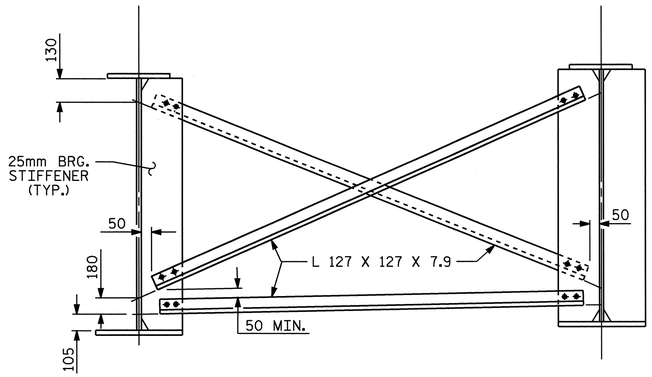

TYPICAL BENT DIAPHRAGM (D2)

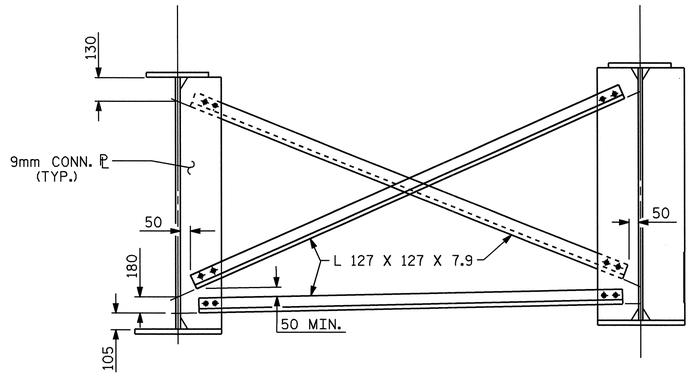

TYPICAL INTERMEDIATE DIAPHRAGM (D3)

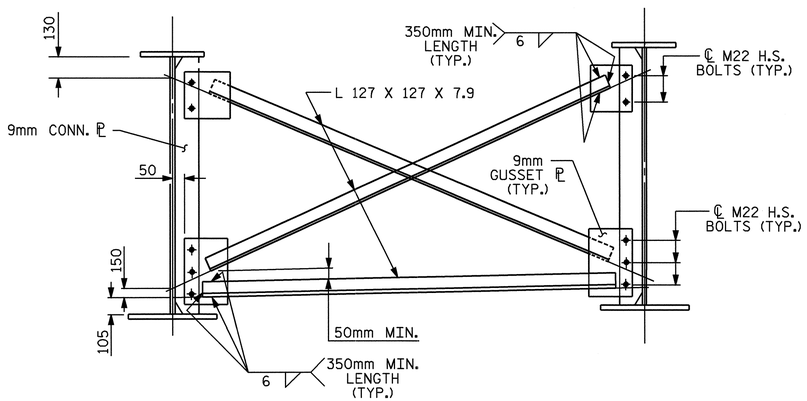

OPTIONAL INTERMEDIATE DIAPHRAGM (D3)

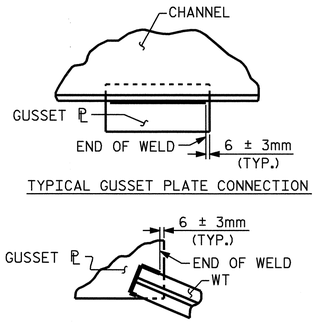

TYPICAL GUSSET PLATE CONNECTION

TYPICAL "TEE" TO GUSSET PLATE CONNECTION

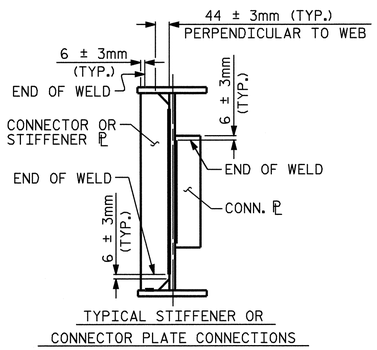

TYPICAL STIFFENER OR CONNECTOR PLATE CONNECTIONS

WELD TERMINATION DETAILS

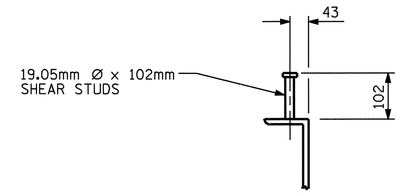

SHEAR STUD DETAILS

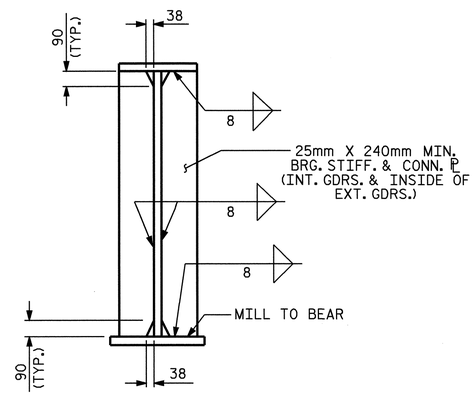

BEARING STIFFENER

AT BENT 1

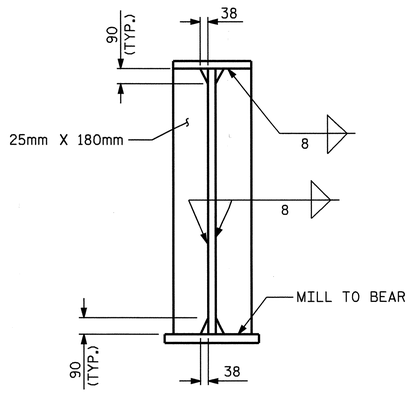

BEARING STIFFENER

AT END BENTS

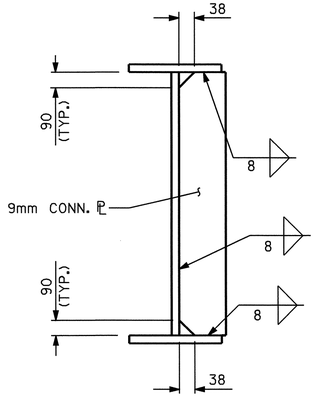

CONNECTOR PLATE

PROJECT NO. R-0609IA

GUILFORD COUNTY

STATION: 13+45.031-L-

SHEET 2 OF 3

STATE OF NORTH CAROLINA
DEPARTMENT OF TRANSPORTATION
RALEIGH

SUPERSTRUCTURE

STRUCTURAL STEEL DETAILS

REVISIONS						SHEET NO.
NO.	BY:	DATE:	NO.	BY:	DATE:	S-10
1			3			TOTAL SHEETS
2			4			321

DRAWN BY : M.K. BEARD DATE : 06/28/04
CHECKED BY : S.H. SOCKWELL DATE : 10/04

22-MAY-2006 08:47
T:\Structures\Final Plans\Str\R-0609IA_sd_SS_01.dgn
klayne

STR. #1

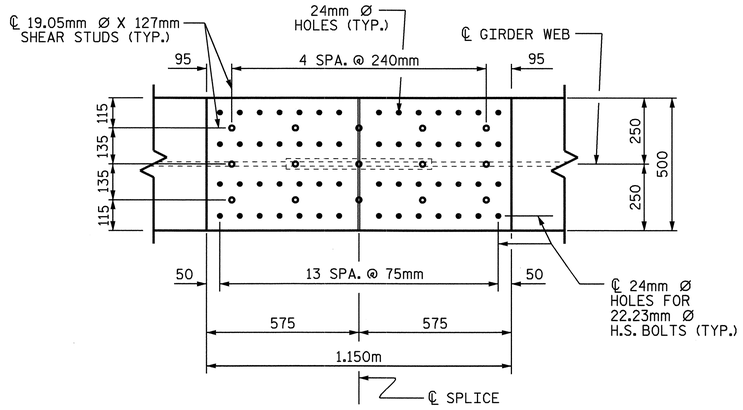

PLAN (TOP OF TOP FLANGE)

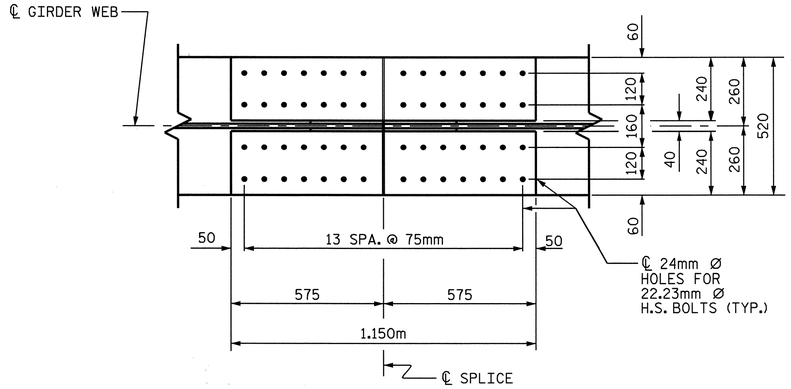

PLAN (TOP OF BOTTOM FLANGE)

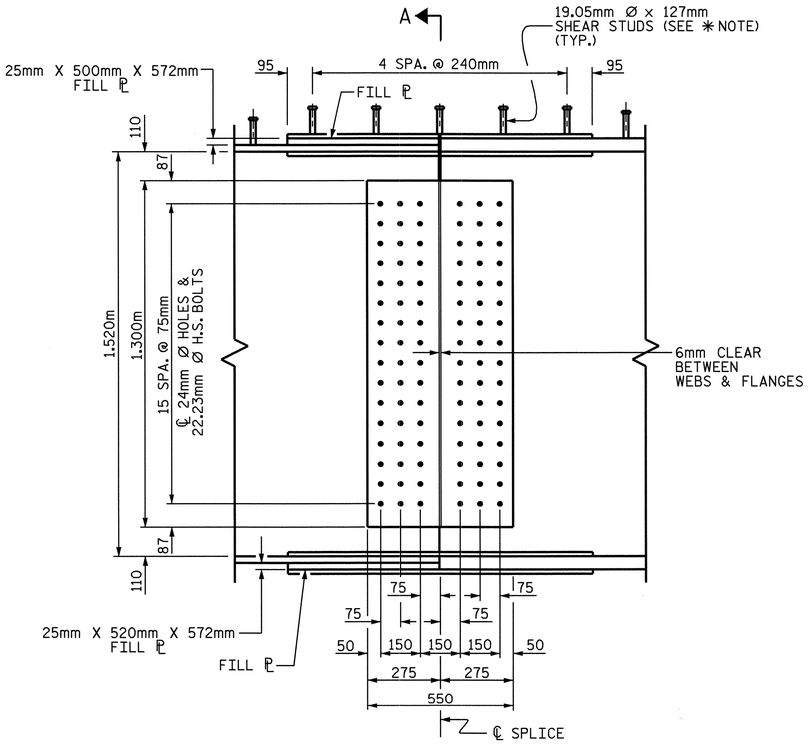

ELEVATION

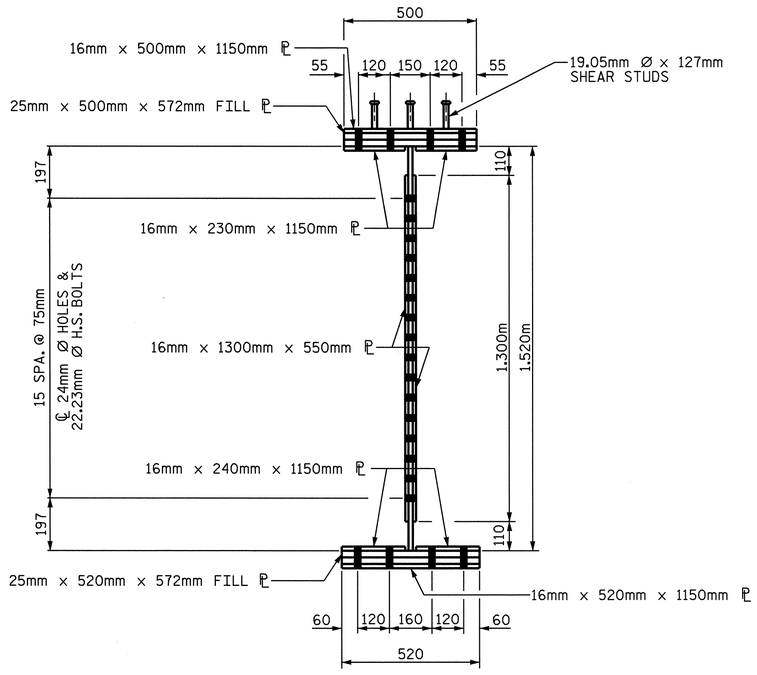

SECTION A-A

NOTES

ALL STRUCTURAL STEEL SHALL BE AASHTO M270 GRADE 345W AND PAINTED IN ACCORDANCE WITH SYSTEM 4 OF ARTICLE 442-7 OF THE STANDARD SPECIFICATIONS UNLESS OTHERWISE NOTED ON THE PLANS.

ALL DIMENSIONS SHOWN ARE HORIZONTAL OR VERTICAL, UNLESS OTHERWISE NOTED.

ALL FIELD CONNECTIONS TO BE 22.23mm DIA. HIGH STRENGTH BOLTS UNLESS OTHERWISE NOTED.

BEARING STIFFENERS ARE TO BE PLACED NORMAL TO THE WEB OF THE GIRDER AND SHALL BE PLUMB.

A CHARPY V-NOTCH TEST IS REQUIRED FOR WEB PLATES, BOTTOM FLANGE PLATES, BOTTOM FLANGE SPLICE PLATES AND WEB SPLICE PLATES (IF USED) FOR ALL GIRDERS AND IN ACCORDANCE WITH ARTICLE 1072-9 OF THE STANDARD SPECIFICATIONS.

SHOP SPLICES ARE PERMITTED TO LIMIT THE MAXIMUM REQUIRED FLANGE PIECE LENGTHS TO 18 METERS AND WEB PIECE LENGTHS TO 14 METERS. PERMITTED FLANGE AND WEB SHOP SPLICES SHALL NOT BE LOCATED WITHIN 4.5 METERS OF MAXIMUM DEAD LOAD DEFLECTION (NOR WITHIN 4.5 METERS OF INTERMEDIATE BEARINGS OF CONTINUOUS UNITS). KEEP 600mm MINIMUM BETWEEN WEB AND FLANGE SHOP SPLICES. KEEP 150mm MINIMUM BETWEEN CONNECTOR PLATE OR TRANSVERSE STIFFENER WELDS AND WEB OR FLANGE SHOP SPLICES.

STUDS ON GIRDERS MAY BE SHIFTED UP TO 25mm IF NECESSARY TO CLEAR FLANGE SPLICE WELD.

END OF GIRDERS SHALL BE PLUMB.

TENSION ON THE AASHTO M164 BOLTS SHALL BE CALIBRATED USING DIRECT TENSION INDICATOR WASHERS IN ACCORDANCE WITH ARTICLE 440-10 OF THE STANDARD SPECIFICATIONS.

AT THE CONTRACTOR'S OPTION, THE DIAPHRAGM WITH THE WELDED GUSSET PLATES MAY BE USED IN LIEU OF THE DIAPHRAGM WITH BOLTED ANGLES AT NO ADDITIONAL COST TO THE DEPARTMENT.

BEARING STIFFENER MAY REQUIRE COPING IF WIDER THAN BOTTOM FLANGE TO AVOID INTERFERENCE WITH THE ANCHOR BOLT.

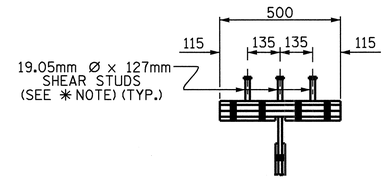

SHEAR STUD DETAIL FOR TOP FLANGE SPLICE PLATE

✳ NOTE:
SHEAR STUDS ARE TO BE WELDED ON TOP OF PLATE BEFORE FIELD ASSEMBLY.

PROJECT NO. R-0609IA
GUILFORD COUNTY
STATION: 13+45.031 -L-

SHEET 3 OF 3

STATE OF NORTH CAROLINA
DEPARTMENT OF TRANSPORTATION
RALEIGH

SUPERSTRUCTURE

STRUCTURAL STEEL DETAILS

BOLTED FIELD SPLICE

NORTH CAROLINA PROFESSIONAL SEAL 23370 ENGINEER VIPUL A. PATEL
11/7/06

REVISIONS						SHEET NO.
NO.	BY:	DATE:	NO.	BY:	DATE:	S-11
1			3			TOTAL SHEETS
2			4			321

DRAWN BY : M.K. BEARD DATE : 06/29/04
CHECKED BY : S.H. SOCKWELL DATE : 10/04

07-NOV-2006 08:30
R:\Structures\Final Plans\Str\R-0609IA_sd_SS_01.dgn
kbeard

STR. #1

DEAD LOAD DEFLECTION TABLE FOR GIRDERS

	SPAN A																				
	GIRDER 1																				
TWENTIETH POINTS	0	.05	.10	.15	.20	.25	.30	.35	.40	.45	.50	.55	.60	.65	.70	.75	.80	.85	.90	.95	0
DEFLECTION DUE TO WEIGHT OF GIRDER	0.000	-0.003	-0.006	-0.008	-0.010	-0.012	-0.013	-0.014	-0.014	-0.014	-0.014	-0.013	-0.011	-0.010	-0.008	-0.006	-0.005	-0.003	-0.002	-0.001	0.000
DEFLECTION DUE TO WEIGHT OF SLAB*	0.000	-0.010	-0.019	-0.027	-0.034	-0.040	-0.045	-0.048	-0.049	-0.048	-0.047	-0.043	-0.039	-0.033	-0.027	-0.021	-0.016	-0.010	-0.005	-0.002	0.000
DEFLECTION DUE TO WEIGHT OF BARRIER RAIL	0.000	-0.002	-0.004	-0.006	-0.008	-0.010	-0.011	-0.011	-0.012	-0.012	-0.011	-0.010	-0.009	-0.008	-0.007	-0.005	-0.004	-0.003	-0.001	-0.001	0.000
TOTAL DEAD LOAD DEFLECTION	0.000	-0.015	-0.029	-0.041	-0.052	-0.062	-0.069	-0.073	-0.075	-0.074	-0.072	-0.066	-0.059	-0.051	-0.042	-0.032	-0.025	-0.016	-0.008	-0.004	0.000
VERTICAL CURVE ORDINATE	0.000	+0.013	+0.023	+0.030	+0.035	+0.036	+0.035	+0.033	+0.030	+0.028	+0.025	+0.023	+0.020	+0.018	+0.015	+0.013	+0.010	+0.008	+0.005	+0.003	0.000
REQUIRED CAMBER	0	28	52	71	87	98	104	106	105	102	97	89	79	69	57	45	35	24	13	7	0

* INCLUDES SLAB, BUILDUPS & STAY-IN-PLACE FORMS.
ALL VALUES ARE SHOWN IN METERS, EXCEPT "FINAL CAMBER" WHICH IS SHOWN IN MILLIMETERS.

SIGN CONVENTION FOR DEAD LOAD DEFLECTION — 0 (+ / −)

DEAD LOAD DEFLECTION TABLE FOR GIRDERS

	SPAN B																				
	GIRDER 1																				
TWENTIETH POINTS	0	.05	.10	.15	.20	.25	.30	.35	.40	.45	.50	.55	.60	.65	.70	.75	.80	.85	.90	.95	0
DEFLECTION DUE TO WEIGHT OF GIRDER	0.000	-0.000	-0.001	-0.001	-0.002	-0.003	-0.005	-0.006	-0.007	-0.008	-0.009	-0.009	-0.010	-0.009	-0.009	-0.008	-0.007	-0.006	-0.004	-0.002	0.000
DEFLECTION DUE TO WEIGHT OF SLAB*	0.000	-0.000	-0.001	-0.004	-0.007	-0.010	-0.014	-0.018	-0.022	-0.026	-0.028	-0.030	-0.031	-0.031	-0.029	-0.026	-0.023	-0.018	-0.012	-0.006	0.000
DEFLECTION DUE TO WEIGHT OF BARRIER RAIL	0.000	-0.000	-0.000	-0.001	-0.002	-0.003	-0.004	-0.005	-0.006	-0.006	-0.007	-0.007	-0.008	-0.007	-0.007	-0.006	-0.005	-0.004	-0.003	-0.002	0.000
TOTAL DEAD LOAD DEFLECTION	0.000	-0.000	-0.002	-0.006	-0.011	-0.016	-0.023	-0.029	-0.035	-0.040	-0.044	-0.046	-0.049	-0.047	-0.045	-0.040	-0.035	-0.028	-0.019	-0.010	0.000
VERTICAL CURVE ORDINATE	0.000	-0.006	-0.012	-0.017	-0.023	-0.029	-0.034	-0.040	-0.046	-0.052	-0.057	-0.062	-0.064	-0.064	-0.062	-0.057	-0.050	-0.041	-0.030	-0.016	0.000
REQUIRED CAMBER	0	-6	-10	-11	-12	-13	-11	-11	-11	-12	-13	-16	-15	-17	-17	-17	-15	-13	-11	-6	0

* INCLUDES SLAB, BUILDUPS & STAY-IN-PLACE FORMS.
ALL VALUES ARE SHOWN IN METERS, EXCEPT "FINAL CAMBER" WHICH IS SHOWN IN MILLIMETERS.

SIGN CONVENTION FOR DEAD LOAD DEFLECTION — 0 (+ / −)

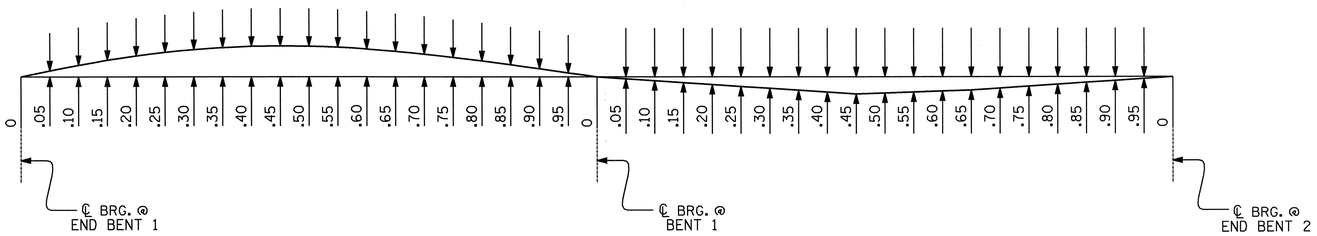

SCHEMATIC CAMBER ORDINATES

SLOPE FOR THE ZERO CAMBER BASE LINE VARIES.

NORTH CAROLINA PROFESSIONAL SEAL 23371 ENGINEER NIKUL A. PATEL
5/22/06

PROJECT NO. R-0609IA
GUILFORD COUNTY
STATION: 13+45.031-L-

SHEET 1 OF 4

STATE OF NORTH CAROLINA
DEPARTMENT OF TRANSPORTATION
RALEIGH

SUPERSTRUCTURE

DEAD LOAD DEFLECTIONS

REVISIONS						SHEET NO.
NO.	BY:	DATE:	NO.	BY:	DATE:	S-12
1			3			TOTAL SHEETS
2			4			321

DRAWN BY : M.K. BEARD DATE : 09/30/04
CHECKED BY : S.H. SOCKWELL DATE : 10/04

22-MAY-2006 09:13
T:\Structures\Final Plans\Str\R-0609IA_sd_DL_01.dgn
klayne

STR. #1

DEAD LOAD DEFLECTION TABLE FOR GIRDERS

	SPAN A																				
	GIRDER 2																				
TWENTIETH POINTS	0	.05	.10	.15	.20	.25	.30	.35	.40	.45	.50	.55	.60	.65	.70	.75	.80	.85	.90	.95	0
DEFLECTION DUE TO WEIGHT OF GIRDER	0.000	-0.003	-0.006	-0.008	-0.010	-0.012	-0.013	-0.014	-0.014	-0.014	-0.014	-0.013	-0.011	-0.010	-0.008	-0.006	-0.005	-0.003	-0.002	-0.001	0.000
DEFLECTION DUE TO WEIGHT OF SLAB ✳	0.000	-0.010	-0.020	-0.029	-0.037	-0.044	-0.049	-0.052	-0.053	-0.053	-0.051	-0.047	-0.042	-0.036	-0.030	-0.023	-0.017	-0.011	-0.006	-0.002	0.000
DEFLECTION DUE TO WEIGHT OF BARRIER RAIL	0.000	-0.002	-0.004	-0.006	-0.008	-0.009	-0.010	-0.011	-0.011	-0.011	-0.011	-0.010	-0.009	-0.008	-0.007	-0.005	-0.004	-0.002	-0.001	-0.001	0.000
TOTAL DEAD LOAD DEFLECTION	0.000	-0.015	-0.030	-0.043	-0.055	-0.065	-0.072	-0.077	-0.078	-0.078	-0.076	-0.070	-0.062	-0.054	-0.045	-0.034	-0.026	-0.016	-0.009	-0.004	0.000
VERTICAL CURVE ORDINATE	0.000	+0.011	+0.020	+0.025	+0.028	+0.028	+0.026	+0.025	+0.023	+0.021	+0.019	+0.017	+0.015	+0.013	+0.011	+0.009	+0.008	+0.006	+0.004	+0.002	0.000
REQUIRED CAMBER	0	26	50	68	83	93	98	102	101	99	95	87	77	67	56	43	34	22	13	6	0

✳ INCLUDES SLAB, BUILDUPS & STAY-IN-PLACE FORMS.
ALL VALUES ARE SHOWN IN METERS, EXCEPT "FINAL CAMBER" WHICH IS SHOWN IN MILLIMETERS.

SIGN CONVENTION FOR DEAD LOAD DEFLECTION —|+ 0 −

DEAD LOAD DEFLECTION TABLE FOR GIRDERS

	SPAN B																				
	GIRDER 2																				
TWENTIETH POINTS	0	.05	.10	.15	.20	.25	.30	.35	.40	.45	.50	.55	.60	.65	.70	.75	.80	.85	.90	.95	0
DEFLECTION DUE TO WEIGHT OF GIRDER	0.000	-0.000	-0.000	-0.001	-0.002	-0.003	-0.005	-0.006	-0.007	-0.008	-0.009	-0.009	-0.010	-0.009	-0.009	-0.008	-0.007	-0.006	-0.004	-0.002	0.000
DEFLECTION DUE TO WEIGHT OF SLAB ✳	0.000	-0.000	-0.001	-0.004	-0.007	-0.011	-0.016	-0.020	-0.024	-0.028	-0.031	-0.033	-0.034	-0.033	-0.032	-0.029	-0.025	-0.020	-0.014	-0.007	0.000
DEFLECTION DUE TO WEIGHT OF BARRIER RAIL	0.000	-0.000	-0.000	-0.001	-0.002	-0.003	-0.004	-0.005	-0.005	-0.006	-0.007	-0.007	-0.007	-0.007	-0.007	-0.006	-0.005	-0.004	-0.003	-0.002	0.000
TOTAL DEAD LOAD DEFLECTION	0.000	-0.000	-0.001	-0.006	-0.011	-0.017	-0.025	-0.031	-0.036	-0.042	-0.047	-0.049	-0.051	-0.049	-0.048	-0.043	-0.037	-0.030	-0.021	-0.011	0.000
VERTICAL CURVE ORDINATE	0.000	-0.007	-0.014	-0.020	-0.027	-0.034	-0.041	-0.047	-0.054	-0.061	-0.067	-0.070	-0.071	-0.070	-0.067	-0.062	-0.054	-0.044	-0.032	-0.017	0.000
REQUIRED CAMBER	0	-7	-13	-14	-16	-17	-16	-16	-18	-19	-20	-21	-20	-21	-19	-19	-17	-14	-11	-6	0

✳ INCLUDES SLAB, BUILDUPS & STAY-IN-PLACE FORMS.
ALL VALUES ARE SHOWN IN METERS, EXCEPT "FINAL CAMBER" WHICH IS SHOWN IN MILLIMETERS.

SIGN CONVENTION FOR DEAD LOAD DEFLECTION —|+ 0 −

PROJECT NO. R-0609IA
GUILFORD COUNTY
STATION: 13+45.031-L-

SHEET 2 OF 4

NORTH CAROLINA PROFESSIONAL SEAL 23371 ENGINEER VIPUL A. PATEL 5/12/06

STATE OF NORTH CAROLINA
DEPARTMENT OF TRANSPORTATION
RALEIGH

SUPERSTRUCTURE

DEAD LOAD DEFLECTIONS

REVISIONS						SHEET NO.
NO.	BY:	DATE:	NO.	BY:	DATE:	S-13
1			3			TOTAL SHEETS
2			4			321

DRAWN BY : M.K. BEARD DATE : 09/30/04
CHECKED BY : S.H. SOCKWELL DATE : 10/04

22-MAY-2006 09:13
T:\Structures\Final Plans\Str\R-0609IA_sd_DL_01.dgn
klayne

STR. #1

DEAD LOAD DEFLECTION TABLE FOR GIRDERS

SPAN A

GIRDER 3

TWENTIETH POINTS	0	.05	.10	.15	.20	.25	.30	.35	.40	.45	.50	.55	.60	.65	.70	.75	.80	.85	.90	.95	0
DEFLECTION DUE TO WEIGHT OF GIRDER	0.000	-0.003	-0.006	-0.008	-0.010	-0.012	-0.013	-0.014	-0.014	-0.014	-0.014	-0.013	-0.011	-0.010	-0.008	-0.006	-0.005	-0.003	-0.002	-0.001	0.000
DEFLECTION DUE TO WEIGHT OF SLAB*	0.000	-0.010	-0.020	-0.029	-0.037	-0.044	-0.049	-0.052	-0.053	-0.053	-0.051	-0.047	-0.042	-0.036	-0.030	-0.023	-0.017	-0.011	-0.006	-0.002	0.000
DEFLECTION DUE TO WEIGHT OF BARRIER RAIL	0.000	-0.002	-0.004	-0.006	-0.008	-0.009	-0.010	-0.011	-0.011	-0.011	-0.011	-0.010	-0.009	-0.008	-0.007	-0.005	-0.004	-0.002	-0.001	-0.001	0.000
TOTAL DEAD LOAD DEFLECTION	0.000	-0.015	-0.030	-0.043	-0.055	-0.065	-0.072	-0.077	-0.078	-0.078	-0.076	-0.070	-0.062	-0.054	-0.045	-0.034	-0.026	-0.016	-0.009	-0.004	0.000
VERTICAL CURVE ORDINATE	0.000	+0.010	+0.016	+0.020	+0.021	+0.020	+0.019	+0.018	+0.016	+0.015	+0.014	+0.012	+0.011	+0.009	+0.008	+0.007	+0.005	+0.004	+0.003	+0.001	0.000
REQUIRED CAMBER	0	25	46	63	76	85	91	95	94	93	90	82	73	63	53	41	31	20	12	5	0

* INCLUDES SLAB, BUILDUPS & STAY-IN-PLACE FORMS.
ALL VALUES ARE SHOWN IN METERS, EXCEPT "FINAL CAMBER" WHICH IS SHOWN IN MILLIMETERS.

SIGN CONVENTION FOR DEAD LOAD DEFLECTION — 0 (+ / −)

DEAD LOAD DEFLECTION TABLE FOR GIRDERS

SPAN B

GIRDER 3

TWENTIETH POINTS	0	.05	.10	.15	.20	.25	.30	.35	.40	.45	.50	.55	.60	.65	.70	.75	.80	.85	.90	.95	0
DEFLECTION DUE TO WEIGHT OF GIRDER	0.000	-0.000	-0.000	-0.001	-0.002	-0.003	-0.005	-0.006	-0.007	-0.008	-0.009	-0.009	-0.010	-0.009	-0.009	-0.008	-0.007	-0.006	-0.004	-0.002	0.000
DEFLECTION DUE TO WEIGHT OF SLAB*	0.000	-0.000	-0.001	-0.004	-0.007	-0.011	-0.016	-0.020	-0.024	-0.028	-0.031	-0.033	-0.034	-0.033	-0.032	-0.029	-0.025	-0.020	-0.014	-0.007	0.000
DEFLECTION DUE TO WEIGHT OF BARRIER RAIL	0.000	-0.000	-0.000	-0.001	-0.002	-0.003	-0.004	-0.005	-0.005	-0.006	-0.007	-0.007	-0.007	-0.007	-0.007	-0.006	-0.005	-0.004	-0.003	-0.002	0.000
TOTAL DEAD LOAD DEFLECTION	0.000	-0.000	-0.001	-0.006	-0.011	-0.017	-0.025	-0.031	-0.036	-0.042	-0.047	-0.049	-0.051	-0.049	-0.048	-0.043	-0.037	-0.030	-0.021	-0.011	0.000
VERTICAL CURVE ORDINATE	0.000	-0.008	-0.016	-0.024	-0.031	-0.039	-0.047	-0.055	-0.063	-0.070	-0.075	-0.078	-0.078	-0.076	-0.072	-0.066	-0.057	-0.046	-0.033	-0.018	0.000
REQUIRED CAMBER	0	-8	-15	-18	-20	-22	-22	-24	-27	-28	-28	-29	-27	-27	-24	-23	-20	-16	-12	-7	0

* INCLUDES SLAB, BUILDUPS & STAY-IN-PLACE FORMS.
ALL VALUES ARE SHOWN IN METERS, EXCEPT "FINAL CAMBER" WHICH IS SHOWN IN MILLIMETERS.

SIGN CONVENTION FOR DEAD LOAD DEFLECTION — 0 (+ / −)

PROJECT NO. R-0609IA

GUILFORD COUNTY

STATION: 13+45.031-L-

SHEET 3 OF 4

NORTH CAROLINA PROFESSIONAL SEAL 23371 ENGINEER VIPUL A. PATEL
5/22/06

STATE OF NORTH CAROLINA
DEPARTMENT OF TRANSPORTATION
RALEIGH

SUPERSTRUCTURE

DEAD LOAD DEFLECTIONS

REVISIONS						SHEET NO.
NO.	BY:	DATE:	NO.	BY:	DATE:	S-14
1			3			TOTAL SHEETS
2			4			321

DRAWN BY : M.K. BEARD DATE : 09/30/04
CHECKED BY : S.H. SOCKWELL DATE : 10/04

22-MAY-2006 09:13
T:\Structures\Final Plans\Str\R-0609IA_sd_DL_01.dgn

STR. #1

DEAD LOAD DEFLECTION TABLE FOR GIRDERS

	SPAN A																				
	GIRDER 4																				
TWENTIETH POINTS	0	.05	.10	.15	.20	.25	.30	.35	.40	.45	.50	.55	.60	.65	.70	.75	.80	.85	.90	.95	0
DEFLECTION DUE TO WEIGHT OF GIRDER	0.000	-0.003	-0.006	-0.008	-0.010	-0.012	-0.013	-0.014	-0.014	-0.014	-0.014	-0.013	-0.011	-0.010	-0.008	-0.006	-0.005	-0.003	-0.002	-0.001	0.000
DEFLECTION DUE TO WEIGHT OF SLAB*	0.000	-0.010	-0.019	-0.027	-0.034	-0.040	-0.045	-0.048	-0.049	-0.048	-0.047	-0.043	-0.039	-0.033	-0.027	-0.021	-0.016	-0.010	-0.005	-0.002	0.000
DEFLECTION DUE TO WEIGHT OF BARRIER RAIL	0.000	-0.002	-0.004	-0.006	-0.008	-0.010	-0.011	-0.011	-0.012	-0.012	-0.011	-0.010	-0.009	-0.008	-0.007	-0.005	-0.004	-0.003	-0.001	-0.001	0.000
TOTAL DEAD LOAD DEFLECTION	0.000	-0.015	-0.029	-0.041	-0.052	-0.062	-0.069	-0.073	-0.075	-0.074	-0.072	-0.066	-0.059	-0.051	-0.042	-0.032	-0.025	-0.016	-0.008	-0.004	0.000
VERTICAL CURVE ORDINATE	0.000	+0.008	+0.013	+0.015	+0.014	+0.014	+0.013	+0.012	+0.011	+0.010	+0.009	+0.008	+0.007	+0.006	+0.005	+0.005	+0.004	+0.003	+0.002	+0.001	0.000
REQUIRED CAMBER	0	23	42	56	66	76	82	85	86	84	81	74	66	57	47	37	29	19	10	5	0

* INCLUDES SLAB, BUILDUPS & STAY-IN-PLACE FORMS.
ALL VALUES ARE SHOWN IN METERS, EXCEPT "FINAL CAMBER" WHICH IS SHOWN IN MILLIMETERS.

SIGN CONVENTION FOR DEAD LOAD DEFLECTION — 0 (+ ↑, − ↓)

DEAD LOAD DEFLECTION TABLE FOR GIRDERS

	SPAN B																				
	GIRDER 4																				
TWENTIETH POINTS	0	.05	.10	.15	.20	.25	.30	.35	.40	.45	.50	.55	.60	.65	.70	.75	.80	.85	.90	.95	0
DEFLECTION DUE TO WEIGHT OF GIRDER	0.000	-0.000	-0.001	-0.001	-0.002	-0.003	-0.005	-0.006	-0.007	-0.008	-0.009	-0.009	-0.010	-0.009	-0.009	-0.008	-0.007	-0.006	-0.004	-0.002	0.000
DEFLECTION DUE TO WEIGHT OF SLAB*	0.000	-0.000	-0.001	-0.004	-0.007	-0.010	-0.014	-0.018	-0.022	-0.026	-0.028	-0.030	-0.031	-0.031	-0.029	-0.026	-0.023	-0.018	-0.012	-0.006	0.000
DEFLECTION DUE TO WEIGHT OF BARRIER RAIL	0.000	-0.000	-0.000	-0.001	-0.002	-0.003	-0.004	-0.005	-0.006	-0.006	-0.007	-0.007	-0.008	-0.007	-0.007	-0.006	-0.005	-0.004	-0.003	-0.002	0.000
TOTAL DEAD LOAD DEFLECTION	0.000	-0.000	-0.002	-0.006	-0.011	-0.016	-0.023	-0.029	-0.035	-0.040	-0.044	-0.046	-0.049	-0.047	-0.045	-0.040	-0.035	-0.028	-0.019	-0.010	0.000
VERTICAL CURVE ORDINATE	0.000	-0.009	-0.018	-0.027	-0.036	-0.045	-0.054	-0.063	-0.072	-0.078	-0.083	-0.085	-0.084	-0.082	-0.077	-0.070	-0.060	-0.049	-0.035	-0.019	0.000
REQUIRED CAMBER	0	-9	-16	-21	-25	-29	-31	-34	-37	-38	-39	-39	-35	-35	-32	-30	-25	-21	-16	-9	0

* INCLUDES SLAB, BUILDUPS & STAY-IN-PLACE FORMS.
ALL VALUES ARE SHOWN IN METERS, EXCEPT "FINAL CAMBER" WHICH IS SHOWN IN MILLIMETERS.

SIGN CONVENTION FOR DEAD LOAD DEFLECTION — 0 (+ ↑, − ↓)

PROJECT NO. R-0609IA
GUILFORD COUNTY
STATION: 13+45.031-L-

SHEET 4 OF 4

NORTH CAROLINA PROFESSIONAL SEAL 23371 ENGINEER VIPUL A. PATEL
5/22/06

STATE OF NORTH CAROLINA
DEPARTMENT OF TRANSPORTATION
RALEIGH

SUPERSTRUCTURE

DEAD LOAD DEFLECTIONS

REVISIONS						SHEET NO.
NO.	BY:	DATE:	NO.	BY:	DATE:	S-15
1			3			TOTAL SHEETS
2			4			321

DRAWN BY : M.K. BEARD DATE : 09/30/04
CHECKED BY : S.H. SOCKWELL DATE : 10/04

22-MAY-2006 09:13
T:\Structures\Final Plans\Str\R-0609IA_sd_DL_01.dgn
klayne

STR. #1

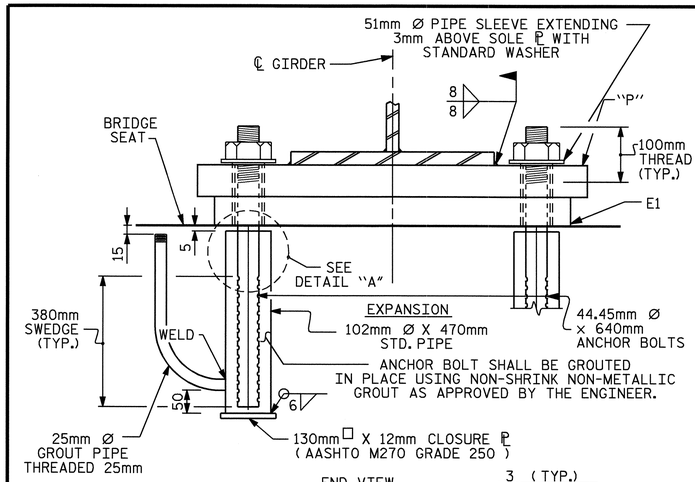

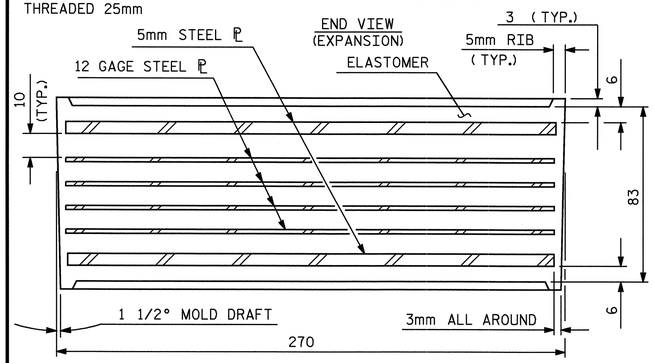

TYPICAL SECTION OF ELASTOMERIC BEARING

ELASTOMERIC BEARING NOTES

FOR ELASTOMERIC BEARINGS, SEE SPECIAL PROVISIONS.

AT ALL POINTS OF SUPPORT, NUTS FOR ANCHOR BOLTS ARE TO BE TIGHTENED FINGER TIGHT AND THEN BACKED OFF 1/2 TURN. THE THREAD OF THE NUT AND BOLT SHALL THEN BE BURRED WITH A SHARP POINTED TOOL.

THE 51mm Ø PIPE SLEEVE SHALL BE CUT FROM SCHEDULE 40 PVC PLASTIC PIPE. THE PVC PLASTIC PIPE SHALL MEET THE REQUIREMENTS OF ASTM D1785.

THE PAYMENT FOR THE PIPE SLEEVES SHALL BE INCLUDED IN THE SEVERAL PAY ITEMS.

SOLE PLATE SHALL BE AASHTO M270 GRADE 345W AND SHALL NOT BE GALVANIZED, ANCHOR BOLTS AND NUTS SHALL BE GALVANIZED IN ACCORDANCE WITH THE STANDARD SPECIFICATIONS.

ANCHOR BOLTS SHALL MEET THE REQUIREMENTS OF ASTM A449. NUTS SHALL MEET THE REQUIREMENTS OF AASHTO M291M-12 OR AASHTO M292M-2H. WASHERS SHALL MEET THE REQUIREMENTS OF AASHTO M293M. SHOP DRAWINGS ARE NOT REQUIRED FOR ANCHOR BOLTS, NUTS AND WASHERS. SHOP INSPECTION IS REQUIRED.

WHEN FIELD WELDING THE SOLE PLATE TO THE GIRDER FLANGE, USE TEMPERATURE INDICATING WAX PENS, OR OTHER SUITABLE MEANS, TO ENSURE THAT THE TEMPERATURE OF THE SOLE PLATE DOES NOT EXCEED 149°C. TEMPERATURES ABOVE THIS MAY DAMAGE THE ELASTOMER.

ALL SURFACES OF BEARING PLATES SHALL BE SMOOTH AND STRAIGHT.

THE CLOSURE PLATE, GROUT PIPE AND STANDARD PIPE FOR THE EXPANSION ASSEMBLY NEED NOT BE GALVANIZED.

THE CONTRACTOR'S ATTENTION IS CALLED TO THE FOLLOWING PROCEDURES TO ACCOMODATE GIRDER TRANSLATION AND END ROTATION:

1. ONCE THE DECK HAS CURED, THE GIRDERS SHALL BE JACKED AND THE ANCHOR BOLTS, SOLE PLATE, AND ELASTOMERIC BEARING SLOTS SHALL BE CENTERED AS NEARLY AS PRACTICAL ABOUT THE BEARING STIFFENER. THIS OPERATION SHALL BE PERFORMED AT APPROXIMATELY 60° F (16° C).

2. AFTER CENTERING THE SLOTS AND ANCHOR BOLTS, THE SOLE PLATES SHALL BE FIELD WELDED TO THE GIRDER FLANGES AND ANCHOR BOLTS GROUTED.

   THE CONTRACTOR MAY PROPOSE ALTERNATE METHODS, PROVIDED DETAILS ARE SUBMITTED TO THE ENGINEER FOR REVIEW AND APPROVAL.

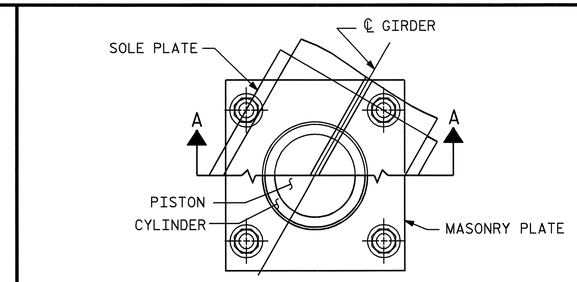

CUT-AWAY PLAN

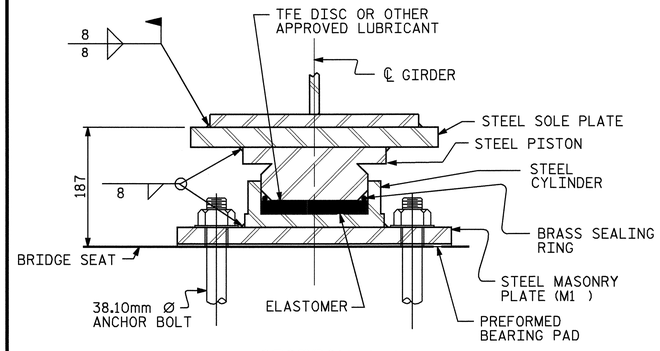

SECTION A-A

PB1, FIXED
(4 REQ'D.)

POT BEARING DETAILS

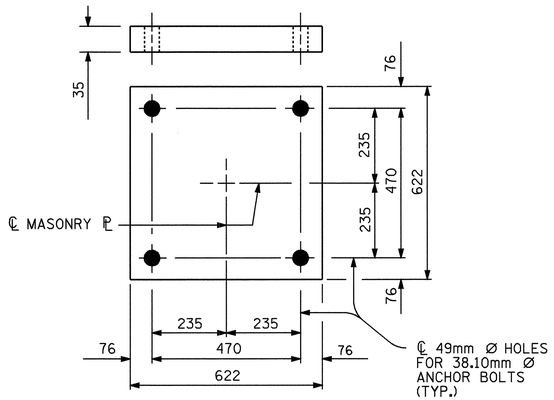

PLAN
M1 (4 REQ'D.)

MASONRY PLATE DETAILS

TABLE FOR LOADS					
BEARING	LOCATION	VERTICAL LOAD (kN)			LATERAL LOAD (kN)
		DEAD	LIVE	TOTAL	
PB1 (FIXED)	BENT 1	1647.26	512.35	2159.61	329.452

POT BEARING NOTES

FOR POT BEARINGS, SEE SPECIAL PROVISIONS.

AT ALL POINTS OF SUPPORT, NUTS FOR ANCHOR BOLTS SHALL BE TIGHTENED FINGER TIGHT AND GIVEN AN ADDITIONAL 1/4 TURN. THE THREAD OF THE NUT AND BOLT SHALL THEN BE BURRED WITH A SHARP POINTED TOOL.

WHEN WELDING THE SOLE PLATE TO THE GIRDER, USE TEMPERATURE INDICATING WAX PENS, OR OTHER SUITABLE MEANS, TO ENSURE THAT THE TEMPERATURE OF THE BEARING DOES NOT EXCEED 121° C TEMPERATURES ABOVE THIS MAY DAMAGE THE TFE OR ELASTOMER.

SOLE PLATES SHOULD BE WELDED TO BEAM FLANGES BEFORE FALSEWORK IS PLACED.

ALL SURFACES OF BEARING PLATES SHALL BE SMOOTH AND STRAIGHT.

FOR THERMAL SPRAYED COATINGS (METALLIZATION), SEE SPECIAL PROVISIONS.

THE CONTRACTOR MAY SUBSTITUTE DISC BEARINGS FOR THE POT BEARINGS SHOWN. FOR OPTIONAL DISC BEARINGS, SEE SPECIAL PROVISIONS.

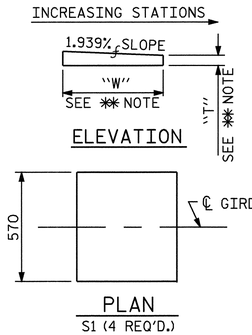

ELEVATION

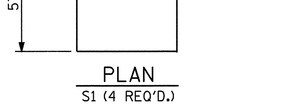

PLAN
S1 (4 REQ'D.)

** NOTE:
DIMENSIONS "W" AND "T" ARE TO BE DETERMINED BY THE MANUFACTURER.

SOLE PLATE DETAILS

—LOAD RATINGS—	
	MAX.D.L.+ L.L.
TYPE IV	809 kN

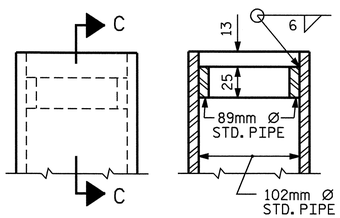

SECTION C-C

DETAIL "A"

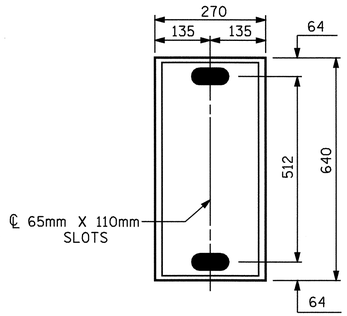

E1 (8 REQ'D)

PLAN VIEW OF ELASTOMERIC BEARING

TYPE IV

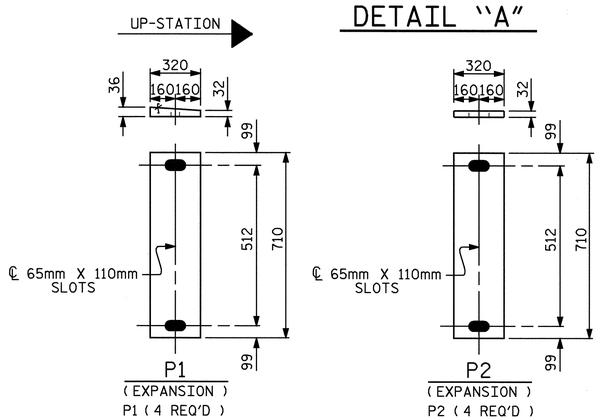

SOLE PLATE DETAILS ("P")

PROJECT NO. R-0609IA
GUILFORD COUNTY
STATION: 13+45.031-L-

NORTH CAROLINA PROFESSIONAL SEAL 23371 ENGINEER VIPUL A. PATEL
5/21/06

STATE OF NORTH CAROLINA
DEPARTMENT OF TRANSPORTATION
RALEIGH

BEARING DETAILS
(STEEL SUPERSTRUCTURE)

ASSEMBLED BY : M.K. BEARD	DATE : 07/30/04
CHECKED BY : S.H. SOCKWELL	DATE : 10/04

DRAWN BY : EEM 10/95	REV. 7/17/98	RWW/LES
CHECKED BY : PEK 10/95	REV. 8/16/99	MAB/LES
	REV. 10/17/00	RWW/LES

REVISIONS						SHEET NO.
NO.	BY:	DATE:	NO.	BY:	DATE:	S-16
1			3			TOTAL SHEETS
2			4			321

22-MAY-2006 08:46
I:\Structures\FinalPlans\Strl\R-0609IA_sd_BG_01.dgn
klayne

STR. #1

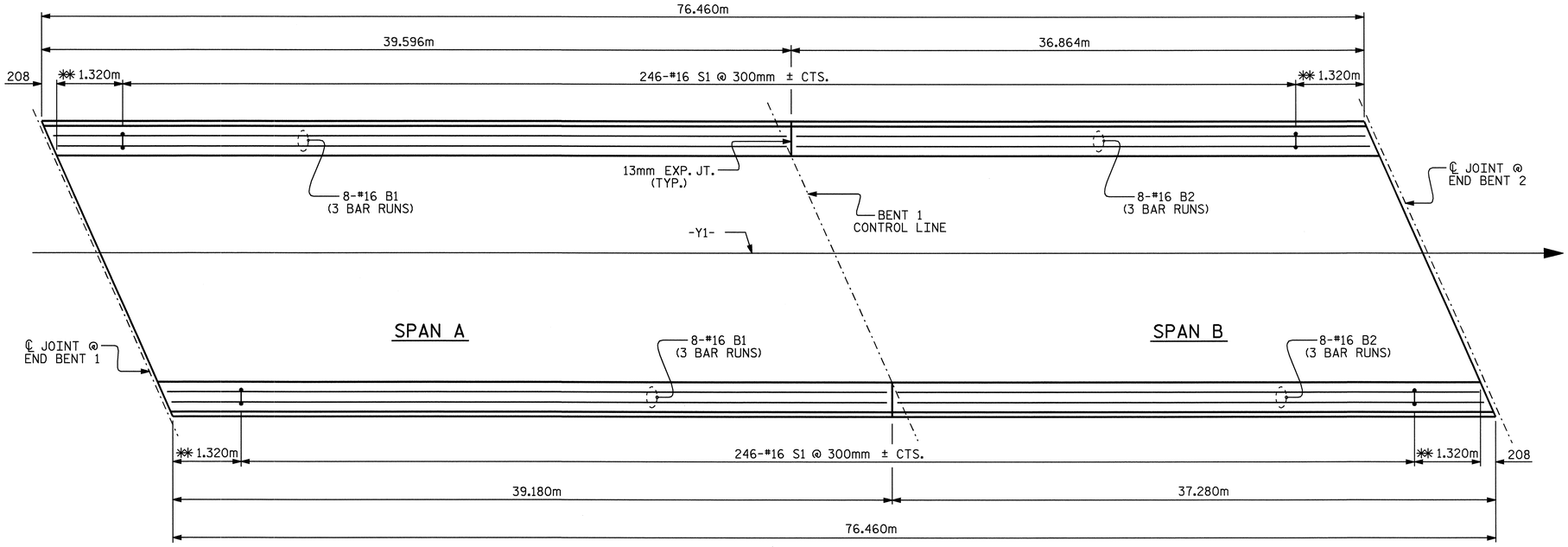

PLAN OF PARAPET

✱✱ "SEE PARAPET AND END POST FOR TWO BAR RAIL" FOR ADDITIONAL REINFORCING.

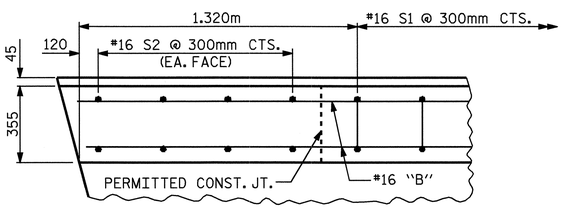

PLAN OF PARAPET

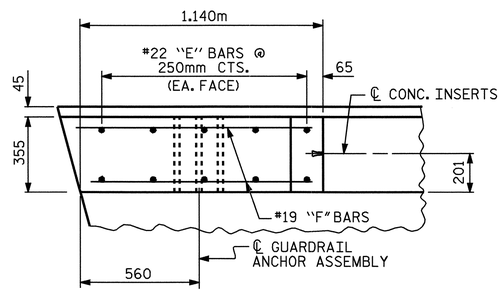

PLAN OF END POST

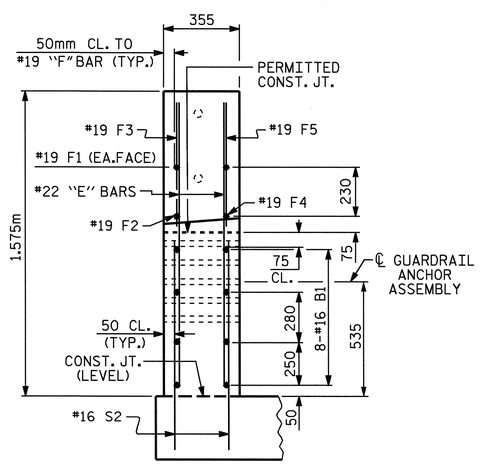

END VIEW

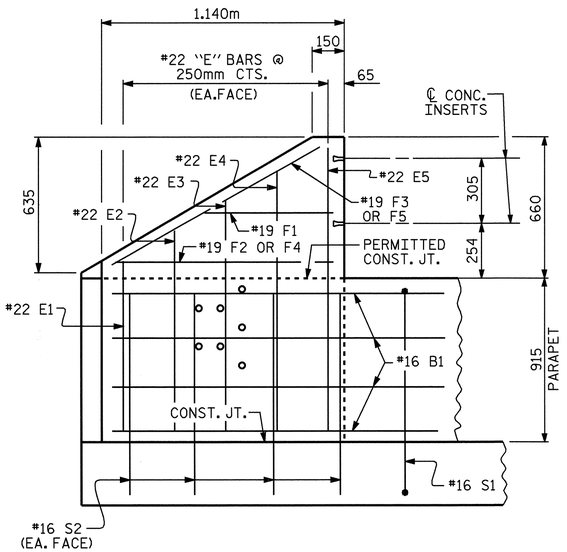

ELEVATION

PARAPET AND END POST FOR TWO BAR RAIL

BILL OF MATERIAL

PARAPET & FOUR END POSTS

BAR	NO.	SIZE	TYPE	LENGTH	WEIGHT
✱B1	48	16	STR	13880	1034
✱B2	48	16	STR	13020	970
✱E1	8	22	STR	780	19
✱E2	8	22	STR	920	22
✱E3	8	22	STR	1060	26
✱E4	8	22	STR	1220	30
✱E5	8	22	STR	1320	32
✱F1	8	19	STR	640	11
✱F2	4	19	STR	1020	9
✱F3	4	19	STR	1100	10
✱F4	4	19	STR	1060	9
✱F5	4	19	STR	1320	12
✱S1	492	16	1	2460	1878
✱S2	32	16	STR	1080	54

✱EPOXY COATED REINFORCING STEEL 4116 kg

CLASS "AA" CONCRETE 50.7m³

355mm X 915mm CONCRETE PARAPET 152.9m

BAR TYPE

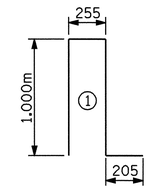

BAR DIMENSIONS ARE OUT TO OUT

NOTES

THE #16 S2 BARS SHALL BE INSTALLED USING AN ADHESIVE ANCHORING SYSTEM AFTER SAWING THE JOINT. FOR ADHESIVELY ANCHORED BOLTS OR DOWELS, SEE SPECIAL PROVISIONS. THE YIELD LOAD FOR THE #16 S2 BARS IS 82.7 kN. FIELD TESTING FOR THE ADHESIVE BONDING SYSTEM IS NOT REQUIRED.

GROOVED CONTRACTION JOINTS 12mm IN DEPTH, SHALL BE TOOLED IN ALL EXPOSED FACES OF PARAPET IN ACCORDANCE WITH ARTICLE 825-10(B) OF THE STANDARD SPECIFICATIONS. THE CONTRACTION JOINTS SHALL BE LOCATED AT A SPACING OF 2.4 METERS TO 3.5 METERS BETWEEN EXPANSION JOINTS. NO CONTRACTION JOINTSWILL BE REQUIRED FOR SEGMENTS LESS THAN 3.5 METERS IN LENGTH.

FOR DETAIL OF CONCRETE INSERT AND GUARDRAIL ANCHOR ASSEMBLY, SEE "RAIL POST SPACINGS AND END OF RAIL DETAIL" SHEETS.

✱ ALL REINFORCING STEEL IN PARAPET SHALL BE EPOXY COATED.

PROJECT NO. R-0609IA

GUILFORD COUNTY

STATION: 13+45.031-L-

SHEET 1 OF 5

STATE OF NORTH CAROLINA
DEPARTMENT OF TRANSPORTATION
RALEIGH

CONCRETE PARAPET AND RAIL END POST DETAILS
FOR TWO BAR METAL RAILS

NORTH CAROLINA PROFESSIONAL SEAL 23371 ENGINEER WILLIAM A. PATE
9/12/06

REVISIONS						SHEET NO.
NO.	BY:	DATE:	NO.	BY:	DATE:	S-17
1			3			TOTAL SHEETS
2			4			321

DRAWN BY : M.K. BEARD DATE : 08/02/04
CHECKED BY : S.H. SOCKWELL DATE : 10/04

22-MAY-2006 08:46
T:\Structures\Final Plans\Str\R-0609IA_sd_2MR_01.dgn
klayne

STR. #1

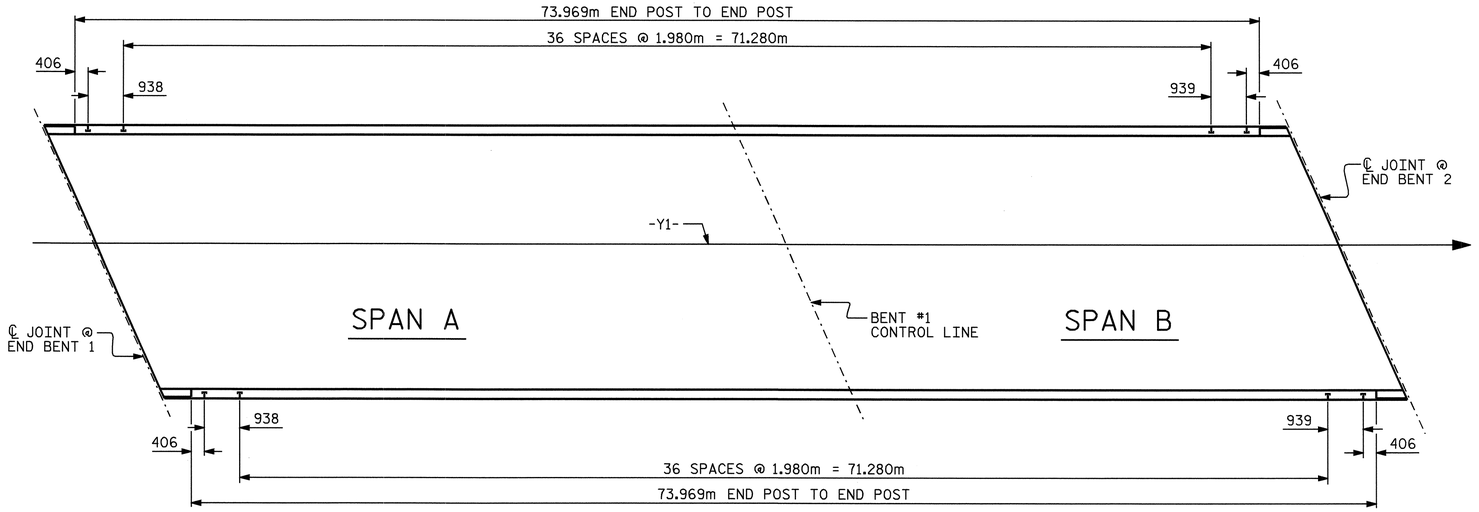

PLAN OF RAIL POST SPACINGS

NOTES

STRUCTURAL CONCRETE INSERT

THE STRUCTURAL CONCRETE INSERT ASSEMBLY SHALL CONSIST OF THE FOLLOWING COMPONENTS:

A. FERRULES SHALL BE MADE FROM STEEL MEETING THE REQUIREMENTS OF AASHTO M169, GRADE 12L14 AND SHALL HAVE A MINIMUM LENGTH OF THREADS OF 38mm.

B. 1 - 19.05mm Ø X 41mm BOLT WITH WASHER. BOLT SHALL CONFORM TO THE REQUIREMENTS OF ASTM A307. BOLT AND WASHER SHALL BE GALVANIZED. (AT THE CONTRACTOR'S OPTION, STAINLESS STEEL BOLT AND WASHER MAY BE USED AS AN ALTERNATE FOR THE 19.05mm Ø X 41mm GALVANIZED BOLT AND WASHER. THEY SHALL CONFORM TO OR EXCEED THE MECHANICAL REQUIREMENTS OF ASTM A307. THE USE OF THIS ALTERNATE SHALL BE APPROVED BY THE ENGINEER.)

C. WIRE STRUT SHOWN IN THE CONCRETE INSERT ASSEMBLY DETAIL IS THE MINIMUM ALLOWABLE SIZE AND SHALL HAVE A MINIMUM TENSILE STRENGTH OF 689 MPa. AS AN OPTION, A 11mm Ø WIRE STRUT WITH A MINIMUM TENSILE STRENGTH OF 620 MPa. IS ACCEPTABLE.

NOTES

METAL RAIL TO END POST CONNECTION

THE METAL RAIL TO END POST CONNECTION SHALL CONSIST OF THE FOLLOWING COMPONENTS :

A. 12mm PLATES SHALL CONFORM TO AASHTO M270 GRADE 250 AND SHALL BE GALVANIZED AFTER FABRICATION.

B. 19.05mm STRUCTURAL CONCRETE INSERT SHALL HAVE A WORKING LOAD SHEAR CAPACITY OF 21.4 kN. THE FERRULES SHALL ENGAGE A 19.05mm Ø X 41mm BOLT WITH 51mm O.D. WASHER IN PLACE. THE 19.05mm Ø X 41mm BOLT SHALL HAVE N. C. THREADS.

C. CAP SCREWS FOR RAIL ATTACHMENT TO ANGLE SHALL CONFORM TO THE REQUIREMENTS OF ASTM F593 ALLOY 305 STAINLESS STEEL. CAP SCREWS TO BE CENTERED IN SLOTS AT 16°C.

D. STANDARD CLAMP BARS (SEE METAL RAIL SHEET).

E. 13mm Ø PIPE SLEEVES (IF REQUIRED) TO BE GALVANIZED.

THE COST OF THE STANDARD CLAMP BARS AND CAP SCREWS USED IN THE METAL RAIL TO END POST CONNECTION SHALL BE INCLUDED IN THE UNIT CONTRACT PRICE BID FOR METERS OF 1 OR 2 BAR METAL RAILS.

THE 19.05mm STRUCTURAL CONCRETE INSERT WITH BOLT SHALL BE ASSEMBLED IN THE SHOP.

THE COST OF THE 19.05mm STRUCTURAL CONCRETE INSERT ASSEMBLY, AND THE 12mm PLATES COMPLETE IN PLACE SHALL BE INCLUDED IN THE VARIOUS PAY ITEMS.

THE CONTRACTOR, AT HIS OPTION, MAY USE AN ADHESIVE BONDING SYSTEM IN LIEU OF THE STRUCTURAL CONCRETE INSERT EMBEDDED IN THE END POST. IF THE ADHESIVE BONDING SYSTEM IS USED, THE 19.05mm Ø X 41mm BOLT WITH WASHER SHALL BE REPLACED WITH A 19.05mm Ø X 165mm BOLT AND 51mm O.D. WASHER. ALL SPECIFICATIONS THAT APPLY TO THE 19.05mm Ø X 41mm BOLT SHALL APPLY TO THE 19.05mm Ø X 165mm BOLT. SEE SPECIAL PROVISIONS FOR "ADHESIVELY ANCHORED ANCHOR BOLTS AND DOWELS". FIELD TESTING OF THE ADHESIVE BONDING SYSTEM IS NOT REQUIRED.

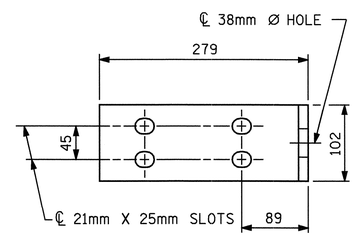

ELEVATION

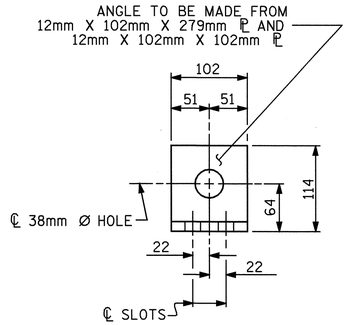

END VIEW (EXP.)

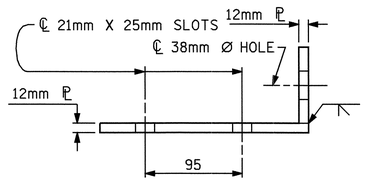

TOP VIEW

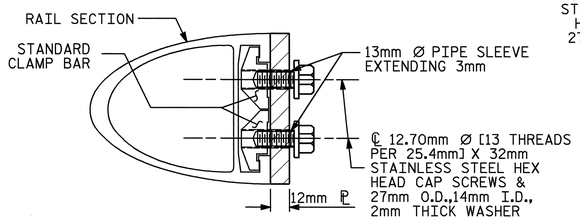

SECTION H-H

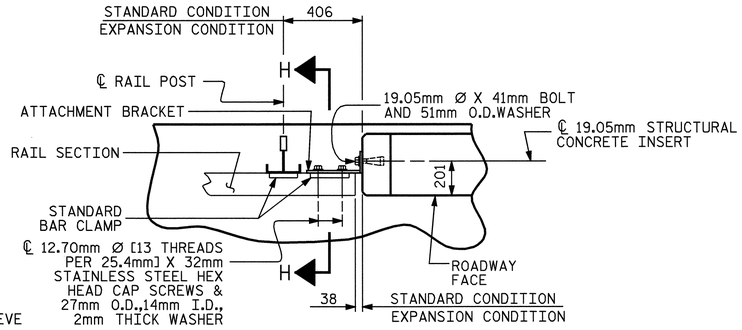

PLAN - RAIL AND END POST

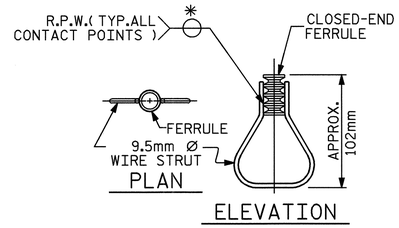

STRUCTURAL CONCRETE INSERT

* EACH WELDED ATTACHMENT OF WIRE TO FERRULE SHALL DEVELOP THE TENSILE STRENGTH OF THE WIRE.

DETAILS FOR ATTACHING METAL RAIL TO END POST

ASSEMBLED BY : M.K. BEARD	DATE : 8/20/04		
CHECKED BY : S.H. SOCKWELL	DATE : 10/04		
DRAWN BY : WJH 3/89	REV. 8/16/99	RWW/LES	
CHECKED BY : CRK 3/89	REV. 10/17/00	LES/RDR	
	REV. 5/7/03	RWW/JTE	

22-MAY-2006 08:46
T:\Structures\Final Plans\Str\R-0609IA_sd_2MR_01.dgn
klayne

PROJECT NO. R-0609IA
GUILFORD COUNTY
STATION: 13+45.031-L-

SHEET 2 OF 5

STATE OF NORTH CAROLINA
DEPARTMENT OF TRANSPORTATION
RALEIGH

STANDARD
RAIL POST SPACINGS
AND
END OF RAIL DETAILS
FOR ONE OR TWO BAR METAL RAILS

NORTH CAROLINA PROFESSIONAL SEAL 23371 ENGINEER VIPUL A. PATEL
5/22/06

REVISIONS						SHEET NO.
NO.	BY:	DATE:	NO.	BY:	DATE:	S-18
1			3			TOTAL SHEETS
2			4			321

STR. #1

STD. NO.BMR2SM

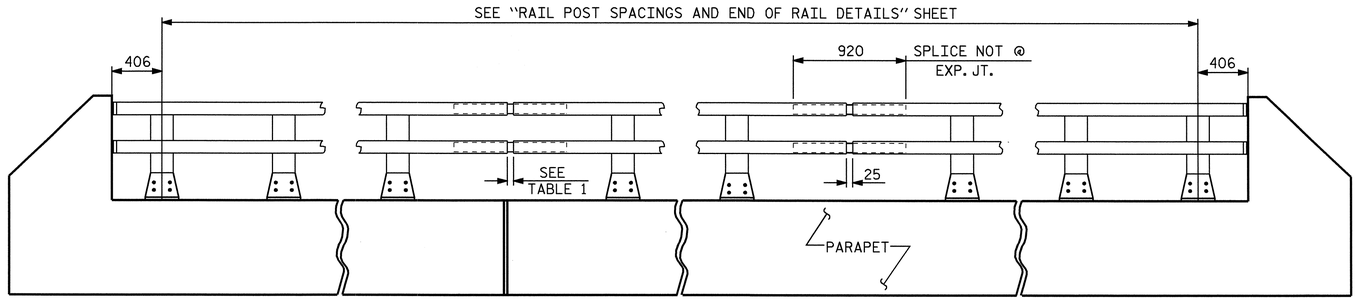

ELEVATION

NOTE: FOR ATTACHMENT OF METAL RAIL TO END POST, SEE "RAIL POST SPACINGS AND END OF RAIL DETAILS FOR TWO BAR METAL RAILS"

TABLE 1	
℄ EXP. JT. @	RAIL OPENING
BENT No. 1	25mm

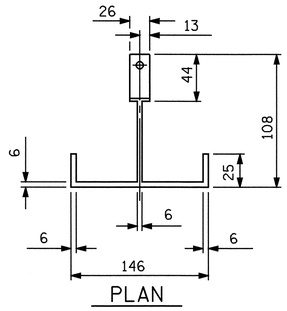

PLAN

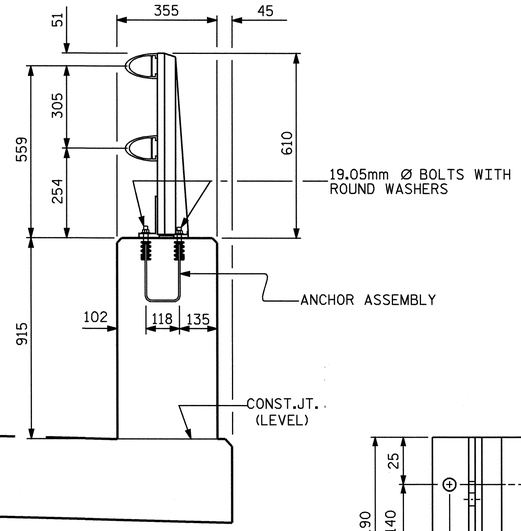

SECTION THRU PARAPET AND RAIL

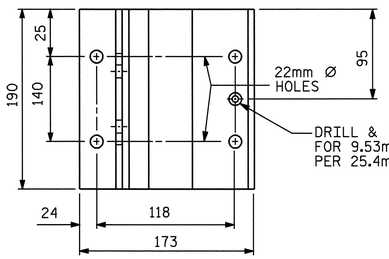

PLAN

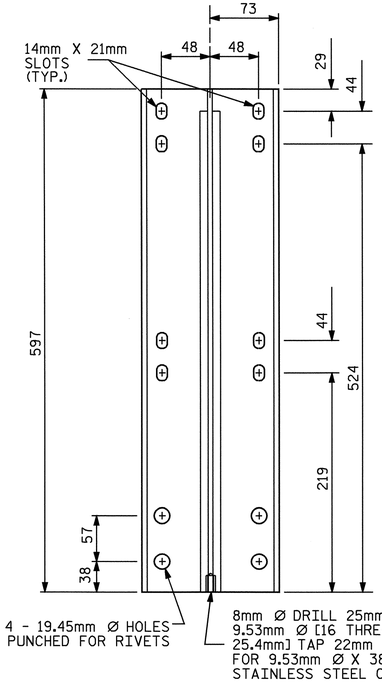

FRONT ELEVATION

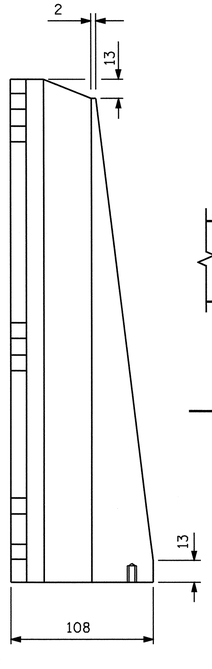

SIDE ELEVATION

DETAILS OF POST

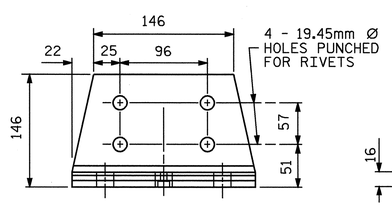

FRONT ELEVATION

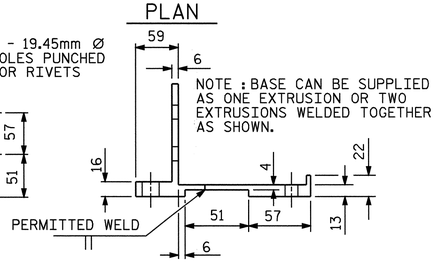

SIDE ELEVATION

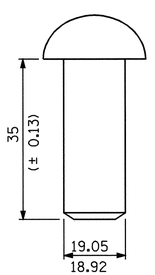

RIVET DETAIL

POST BASE DETAILS

NOTES

AT THE CONTRACTOR'S OPTION, METAL RAIL MAY BE EITHER ALUMINUM OR GALVANIZED STEEL IN ACCORDANCE WITH THE REQUIREMENTS OF THE GENERAL NOTES AND THE FOLLOWING SPECIFICATIONS FOR THE ALTERNATE MATERIALS; HOWEVER, THE CONTRACTOR WILL BE REQUIRED TO USE THE SAME RAIL MATERIAL ON ALL STRUCTURES ON THE PROJECT FOR WHICH METAL RAIL IS DESIGNATED.

ALUMINUM RAILS

MATERIAL FOR POSTS, BASES AND RAILS, EXPANSION BARS AND CLAMP BARS SHALL BE ASTM B221 ALLOY 6061-T6.

MATERIAL FOR RIVETS SHALL BE ASTM B316 ALLOY 6061-T6. RIVETS SHALL BE STANDARD BUTTON HEAD AND CONE POINT COLD DRIVEN AS PER DRAWING.

THE BASE OF RAIL POSTS, OR ANY OTHER ALUMINUM SURFACE IN CONTACT WITH CONCRETE SHALL BE THOROUGHLY COATED WITH AN ALUMINUM IMPREGNATED CAULKING COMPOUND OF APPROVED QUALITY.

MATERIAL FOR SHIMS TO BE ASTM B209 ALLOY 6061-T6.

GALVANIZED STEEL RAILS

MATERIAL AND GALVANIZING ARE TO CONFORM TO THE FOLLOWING SPECIFICATIONS:

POST, POST BASES, RAILS, EXPANSION BARS AND CLAMP BARS: AASHTO M270 GRADE 250 STRUCTURAL STEEL - GALVANIZED TO AASHTO M111.

RIVETS: RIVETS SHALL MEET THE REQUIREMENTS OF ASTM A502 FOR GRADE 1 RIVETS.

THE CUT ENDS OF GALVANIZED STEEL RAILING, AFTER GRINDING SMOOTH SHALL BE GIVEN TWO COATS OF ZINC RICH PAINT MEETING THE REQUIREMENTS OF FEDERAL SPECIFICATION MIL-P-26915 USAF TYPE 1, OR OF FEDERAL SPECIFICATIONS TT-P-641.

SHIMS: SHIMS SHALL MEET THE REQUIREMENTS OF ASTM A570M FOR GRADE 230 OR A611 FOR GRADE C AND SHALL BE GALVANIZED IN ACCORDANCE WITH AASHTO M111.

RAIL CAPS: RAIL CAPS SHALL MEET THE REQUIREMENTS OF ASTM A570M FOR GRADE 230 OR A611 FOR GRADE C AND SHALL BE GALVANIZED IN ACCORDANCE WITH AASHTO M111.

GENERAL NOTES

RAILING SHALL BE CONTINUOUS FROM END POST TO END POST OF BRIDGE. EACH JOINT IN RAIL LENGTH SHALL BE SPLICED AS DETAILED. PANEL LENGTHS OF RAIL SHALL BE ATTACHED TO A MINIMUM OF THREE POSTS.

FOR END OF RAIL TO CLEAR FACE OF CONCRETE END POST DIMENSION, SEE STANDARD NO. BMR2SM.

CAP SCREWS SHALL BE ASTM F593 ALLOY 305 STAINLESS STEEL. WASHERS SHALL MEET THE REQUIREMENTS OF ASTM F844 EXCEPT THEY SHALL BE MADE FROM ALLOY 304 STAINLESS STEEL.

CERTIFIED MILL REPORTS ARE REQUIRED FOR RAILS AND POSTS. SHOP INSPECTION IS NOT REQUIRED.

METAL RAIL POSTS SHALL BE SET NORMAL TO CURB GRADE.

METHOD OF MEASUREMENT FOR METAL RAILS: FOR LENGTH OF METAL RAILS TO BE PAID FOR, SEE THE STANDARD SPECIFICATIONS.

CURVED RAIL USAGE: WHERE RAILS ARE TO BE USED ON BRIDGES ON HORIZONTAL AND/OR VERTICAL CURVATURE THE CONTRACTOR MAY, AT HIS OPTION, HAVE THE REQUIRED CURVATURE IN THE RAIL FORMED IN THE SHOP OR IN THE FIELD. IN EITHER EVENT, THE RAIL SHALL CONFORM WITHOUT BUCKLING OR KINKING TO THE REQUIRED CURVATURE IN A UNIFORM MANNER ACCEPTABLE TO THE ENGINEER.

TO INSURE FUTURE IDENTIFICATION OF THE FABRICATOR, A PERMANENT IDENTIFYING MARK SHALL BE PLACED ON EACH POST. THE METHOD OF MARKING AND LOCATION SHALL BE SUCH THAT IT DOES NOT DETRACT FROM THE APPEARANCE OF THE POST, BUT REMAINS VISIBLE AFTER RAIL PLACEMENT.

SHIMS SHALL BE USED AS NECESSARY FOR POST ALIGNMENT.

ALLOY 6351-T5 MAY BE SUBSTITUTED FOR ALLOY 6061-T6 WHERE APPLICABLE.

MINOR VARIATIONS IN DETAILS OF METAL RAIL WILL BE CONSIDERED. DETAILS OF SUCH VARIATIONS, IF DESIRED, SHALL BE SUBMITTED FOR APPROVAL.

GROOVED CONTRACTION JOINTS, 12mm IN DEPTH, SHALL BE TOOLED IN ALL EXPOSED FACES OF THE PARAPET IN ACCORDANCE WITH ARTICLE 825-10(B) OF THE STANDARD SPECIFICATIONS. THE CONTRACTION JOINT SHALL BE LOCATED AT A SPACING OF 2.4m TO 3.5m BETWEEN EXPANSION JOINTS. NO CONTRACTION JOINTS WILL BE REQUIRED FOR SEGMENTS LESS THAN 3.5m IN LENGTH.

PAY LENGTH = 147.9 METERS

PROJECT NO. R-0609IA

GUILFORD COUNTY

STATION: 13+45.031-L-

SHEET 3 OF 5

STATE OF NORTH CAROLINA
DEPARTMENT OF TRANSPORTATION
RALEIGH

STANDARD

2 BAR METAL RAIL

NORTH CAROLINA PROFESSIONAL SEAL 23371 ENGINEER PAUL A. PATE
5/22/06

ASSEMBLED BY : M.K. BEARD	DATE :07/06/04
CHECKED BY : S.H. SOCKWELL	DATE :10/04
DRAWN BY : EEM 6/94	REV. 8/16/99 RWW/LES
CHECKED BY : RGW 6/94	REV. 10/17/00 LES/RDR
	REV. 5/7/03R RWW/JTE

REVISIONS						SHEET NO.
NO.	BY:	DATE:	NO.	BY:	DATE:	S-19
1			3			TOTAL SHEETS
2			4			321

STR. #1

STD. NO. BMR3SM

22-MAY-2006 08:46
T:\Structures\Final Plans\Strl\R-0609IA_sd_2MR_01.dgn
klayne

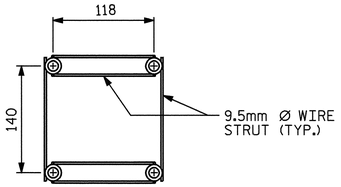

PLAN

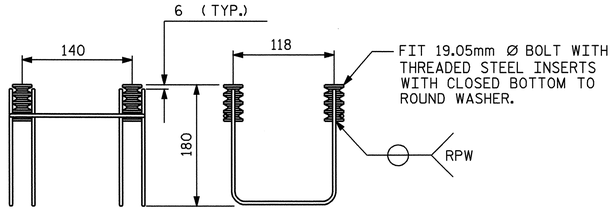

SIDE VIEW ELEVATION

MINIMUM LENGTH OF THREADS IN INSERT (FERRULE): 44mm

4-BOLT METAL RAIL ANCHOR ASSEMBLY

(78 ASSEMBLIES REQUIRED)

NOTES

STRUCTURAL CONCRETE ANCHOR ASSEMBLY

THE STRUCTURAL CONCRETE ANCHOR ASSEMBLY SHALL CONSIST OF THE FOLLOWING COMPONENTS:

A. FERRULES SHALL BE MADE FROM STEEL MEETING THE REQUIREMENTS OF AASHTO M169, GRADE 12L14 AND SHALL HAVE A MINIMUM LENGTH OF THREADS OF 51mm FOR 19mm FERRULES.

B. 4 - 19.05mm Ø X 64mm BOLTS WITH WASHERS. BOLTS SHALL CONFORM TO THE REQUIREMENTS OF ASTM A307. BOLTS AND WASHERS SHALL BE GALVANIZED. AT THE CONTRACTOR'S OPTION, STAINLESS STEEL BOLTS AND WASHERS MAY BE USED AS AN ALTERNATE FOR THE 19.05mm Ø X 64mm GALVANIZED BOLTS AND WASHERS. THEY SHALL CONFORM TO OR EXCEED THE MECHANICAL REQUIREMENTS OF ASTM A307. THE USE OF THIS ALTERNATE SHALL BE APPROVED BY THE ENGINEER.

C. WIRE STRUT SHOWN IN THE CONCRETE ANCHOR ASSEMBLY DETAIL IS THE MINIMUM ALLOWABLE SIZE AND SHALL HAVE A MINIMUM TENSILE STRENGTH OF 689 MPa. AS AN OPTION, A 11mm Ø WIRE STRUT WITH A TENSILE STRENGTH OF 620 MPa. IS ACCEPTABLE.

D. THE METAL RAIL ANCHOR ASSEMBLIES TO BE HOT DIPPED GALVANIZED TO CONFORM TO REQUIREMENTS OF AASHTO M111.

E. THE COST OF THE METAL RAIL ANCHOR ASSEMBLY WITH BOLTS AND WASHERS COMPLETE IN PLACE SHALL BE INCLUDED IN THE PRICE BID FOR METERS OF METAL RAIL.

F. BOLTS TO BE TIGHTENED ONE-HALF TURN WITH A WRENCH FROM A FINGER-TIGHT POSITION.

THE CONTRACTOR, AT HIS OPTION, MAY USE ADHESIVELY ANCHORED ANCHOR BOLTS IN PLACE OF THE METAL ANCHOR ASSEMBLY. THE YIELD LOAD OF THE 19.05mm Ø BOLT IS 44.5 kN. FIELD TESTING OF THE ADHESIVE BONDING SYSTEM IS REQUIRED. SEE SPECIAL PROVISIONS FOR "ADHESIVELY ANCHORED ANCHOR BOLTS OR DOWELS".

WHEN ADHESIVELY ANCHORED ANCHOR BOLTS ARE USED, BOLTS SHALL MEET THE REQUIREMENTS OF ASTM F593 ALLOY 304 STAINLESS STEEL WITH MINIMUM 517 MPa ULTIMATE STRENGTH. NUTS SHALL MEET THE REQUIREMENTS OF ASTM F594 ALLOY 304 STAINLESS STEEL AND WASHERS SHALL MEET THE REQUIREMENTS OF ASTM F844 EXCEPT THEY SHALL BE MADE FROM ALLOY 304 STAINLESS STEEL.

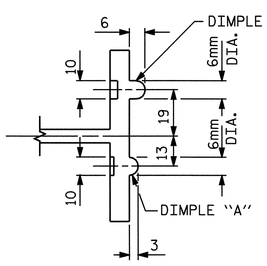

SECTION B - B

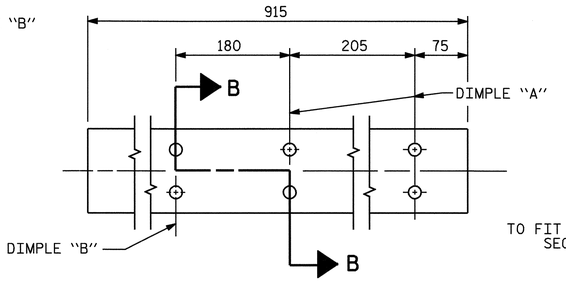

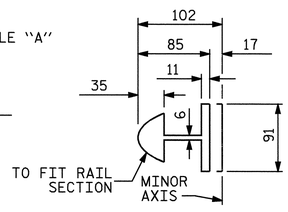

BAR SECTION

EXPANSION BAR DETAILS

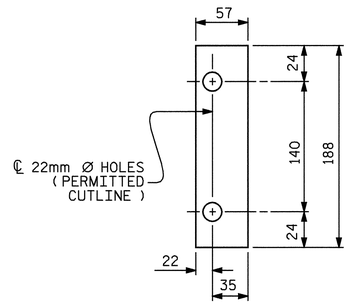

FRONT PLATE

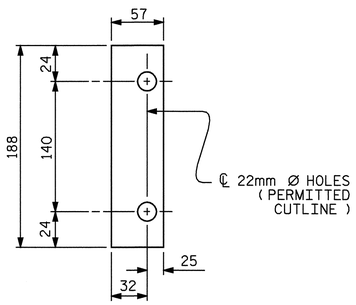

REAR PLATE

SHIM DETAILS

NOTE :
SHIMS MAY BE CUT ALONG PERMITTED CUTLINE OR SLOTTED TO EDGE OF PLATE TO FACILITATE PLACEMENT.

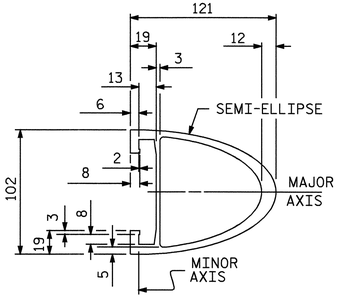

RAIL SECTION

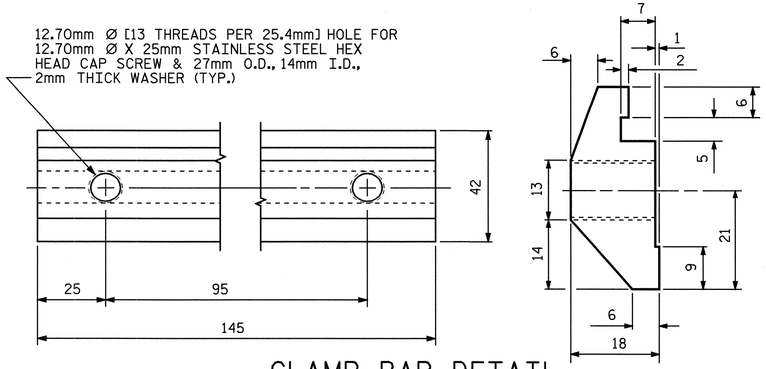

CLAMP BAR DETAIL

(4 REQUIRED PER POST)

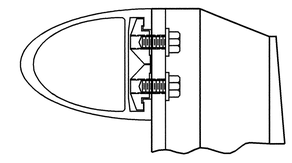

CLAMP ASSEMBLY

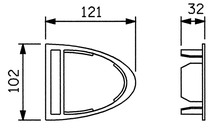

RAIL CAP

PROJECT NO. R-0609IA

GUILFORD COUNTY

STATION: 13+45.031-L-

SHEET 4 OF 5

STATE OF NORTH CAROLINA
DEPARTMENT OF TRANSPORTATION
RALEIGH

STANDARD

2 BAR METAL RAIL

REVISIONS						SHEET NO.
NO.	BY:	DATE:	NO.	BY:	DATE:	S-20
1			3			TOTAL SHEETS
2			4			321

ASSEMBLED BY : M.K. BEARD DATE :07/06/04
CHECKED BY : S.H. SOCKWELL DATE :10/04

DRAWN BY : EEM 6/94
CHECKED BY : RGW 6/94

REV. 8/16/99 RAL/LES
REV. 10/17/00 LES/RDR
REV. 5/7/03 RWW/JTE

NORTH CAROLINA PROFESSIONAL SEAL 23371 ENGINEER VIRUL A. PATEL
5/22/06

22-MAY-2006 09:07
T:\STRUCT~1\FINALP~1\Str1\R-0609IA_sd_2MR_01.dgn
klayne

STR. #1

STD. NO. BMR4SM

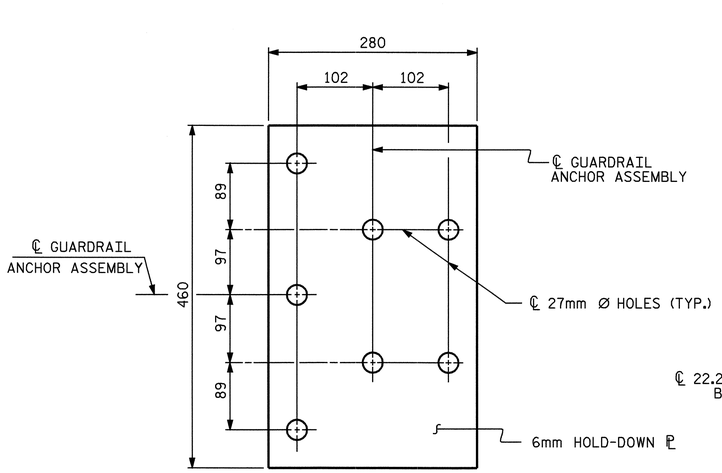

PLAN

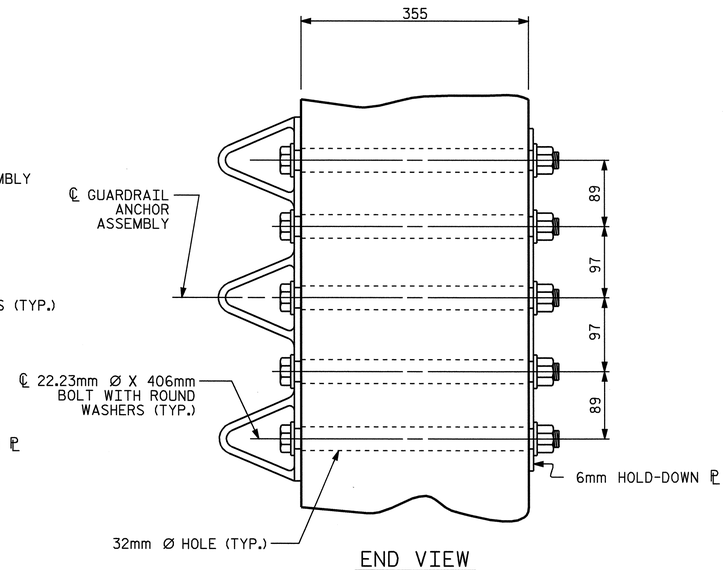

END VIEW

GUARDRAIL ANCHOR ASSEMBLY DETAILS

NOTES

THE GUARDRAIL ANCHOR ASSEMBLY SHALL CONSIST OF A 6mm HOLD DOWN PLATE AND 7 - 22.23mm Ø BOLTS WITH NUTS AND WASHERS.

THE HOLD-DOWN PLATE SHALL CONFORM TO AASHTO M270 GRADE 250. AFTER FABRICATION, THE HOLD-DOWN PLATE SHALL BE HOT-DIP GALVANIZED IN ACCORDANCE WITH AASHTO M111.

BOLTS SHALL CONFORM TO THE REQUIREMENTS OF ASTM A307 AND NUTS SHALL CONFORM TO THE REQUIREMENTS OF AASHTO M291M. BOLTS, NUTS AND WASHERS SHALL BE GALVANIZED. AT THE CONTRACTOR'S OPTION, STAINLESS STEEL BOLTS, NUTS AND WASHERS MAY BE USED AS AN ALTERNATE FOR THE 22.23mm Ø GALVANIZED BOLTS, NUTS AND WASHERS. THEY SHALL CONFORM TO OR EXCEED THE MECHANICAL REQUIREMENTS OF ASTM A307. THE USE OF THIS ALTERNATE SHALL BE APPROVED BY THE ENGINEER.

AFTER INSTALLATION, THE EXPOSED THREAD OF THE BOLT SHALL BE BURRED WITH A SHARP POINTED TOOL.

THE COST OF THE GUARDRAIL ANCHOR ASSEMBLIES WITH BOLTS, NUTS AND WASHERS COMPLETE IN PLACE, SHALL BE INCLUDED IN THE VARIOUS PAY ITEMS.

THE VERTICAL REINFORCING BARS MAY BE SHIFTED SLIGHTLY IN THE END POST TO CLEAR ASSEMBLY BOLTS.

THE 32mm Ø HOLES SHALL BE FORMED OR DRILLED WITH A CORE BIT. IMPACT TOOLS WILL NOT BE PERMITTED. ANY CONCRETE DAMAGED BY THIS WORK SHALL BE REPAIRED TO THE SATISFACTION OF THE ENGINEER.

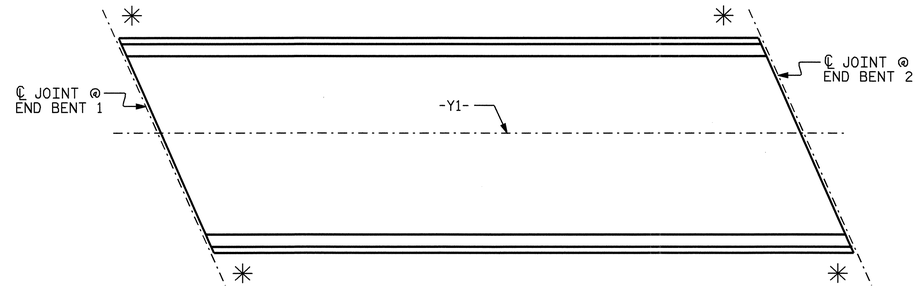

SKETCH SHOWING POINTS OF ATTACHMENT

✳LOCATION OF GUARDRAIL ATTACHMENT

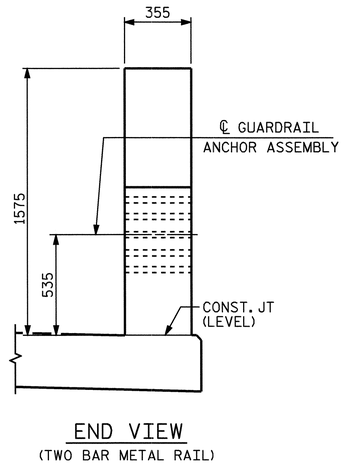

END VIEW
(TWO BAR METAL RAIL)

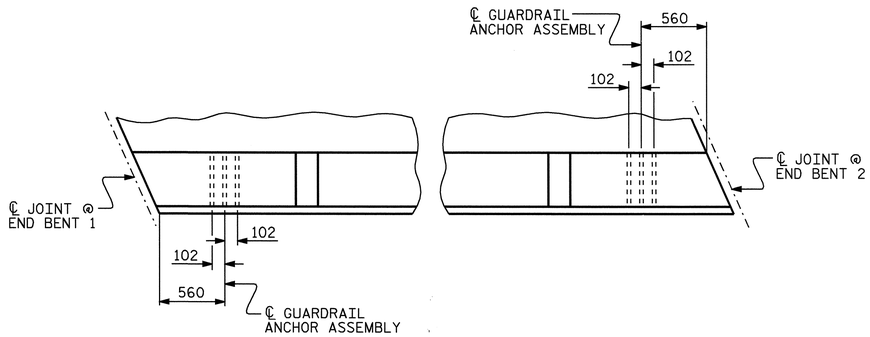

PLAN

LOCATION OF GUARDRAIL ANCHOR AT END POST

PROJECT NO. R-0609IA

GUILFORD COUNTY

STATION: 13+45.031-L-

SHEET 5 OF 5

STATE OF NORTH CAROLINA
DEPARTMENT OF TRANSPORTATION
RALEIGH

STANDARD

GUARDRAIL ANCHORAGE DETAILS FOR METAL RAILS

NORTH CAROLINA PROFESSIONAL SEAL 23371 ENGINEER VIPUL A. PATEL
5/12/06

REVISIONS						SHEET NO.
NO.	BY:	DATE:	NO.	BY:	DATE:	S-21
1			3			TOTAL SHEETS
2			4			321

ASSEMBLED BY : M.K. BEARD	DATE : 07/06/04	
CHECKED BY : S.H. SOCKWELL	DATE : 10/04	
DRAWN BY : EEM 6/94	REV. 8/16/99	RWW/LES
CHECKED BY : RGW 6/94	REV. 10/17/00	RWW/LES
	REV. 5/7/03	RWW/JTE

22-MAY-2006 09:07
T:\STRUCT~1\FINALP~1\Str1\R-0609IA_sd_2MR_01.dgn
klayne

STR. #1

STD. NO. BMR8SM

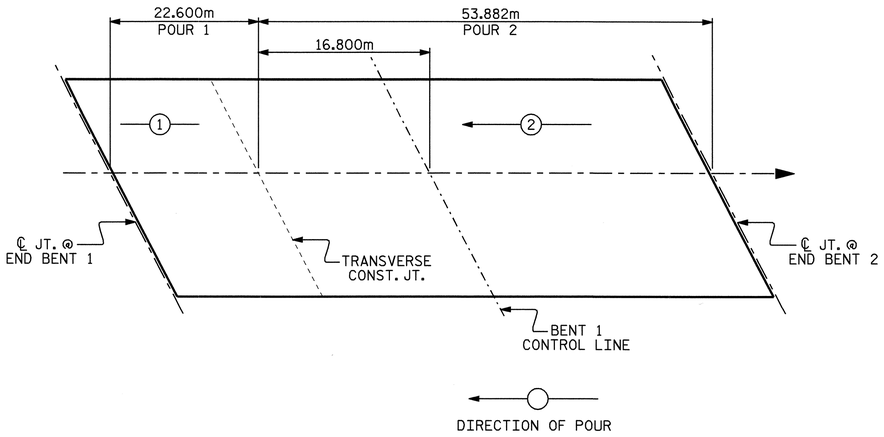

POUR SEQUENCE

BILL OF MATERIAL - SPANS "A" & "B"

BAR	NO.	SIZE	TYPE	LENGTH	WEIGHT	BAR	NO.	SIZE	TYPE	LENGTH	WEIGHT
✳A1	441	#16	STR	11200	7666	✳B1	108	#13	STR	7120	764
A2	441	#16	STR	11200	7666	B2	220	#16	STR	15800	5395
						✳B3	102	#22	STR	14500	4499
✳A101	4	#16	STR	10700	66	✳B4	81	#13	STR	8360	673
✳A102	4	#16	STR	10080	63						
✳A103	4	#16	STR	9480	59	✳G1	2	#16	STR	12620	39
✳A104	4	#16	STR	8860	55						
✳A105	4	#16	STR	8240	51	✳K1	12	#16	1	2520	47
✳A106	4	#16	STR	7620	47	✳K2	12	#16	2	2660	50
✳A107	4	#16	STR	7000	44	✳K3	18	#16	STR	3280	92
✳A108	4	#16	STR	6400	40						
✳A109	4	#16	STR	5780	36	✳S1	42	#13	3	1360	57
✳A110	4	#16	STR	5160	32						
✳A111	4	#16	STR	4540	28	✳EPOXY COATED REINF. STEEL = 14,496 KG.					
✳A112	4	#16	STR	3920	24	REINFORCING STEEL = 13,670 KG.					
✳A113	4	#16	STR	3300	20						
✳A114	4	#16	STR	2700	17						
✳A115	4	#16	STR	2080	13						
✳A116	4	#16	STR	1460	9						
✳A117	4	#16	STR	840	5						
A201	4	#16	STR	10700	66						
A202	4	#16	STR	10080	63						
A203	4	#16	STR	9480	59						
A204	4	#16	STR	8860	55						
A205	4	#16	STR	8240	51						
A206	4	#16	STR	7620	47						
A207	4	#16	STR	7000	44						
A208	4	#16	STR	6400	40						
A209	4	#16	STR	5780	36						
A210	4	#16	STR	5160	32						
A211	4	#16	STR	4540	28						
A212	4	#16	STR	3920	24						
A213	4	#16	STR	3300	20						
A214	4	#16	STR	2700	17						
A215	4	#16	STR	2080	13						
A216	4	#16	STR	1460	9						
A217	4	#16	STR	840	5						

BAR TYPES

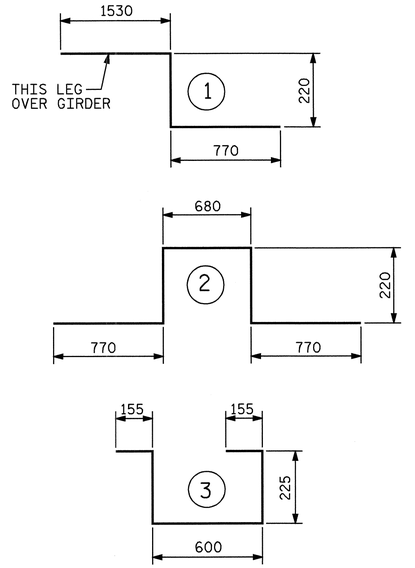

ALL BAR DIMENSIONS ARE OUT TO OUT

SUPERSTRUCTURE BILL OF MATERIAL

	CLASS AA CONCRETE	REINFORCING STEEL	EPOXY COATED REINFORCING STEEL
SPANS	(CU.METER)	(kg)	(kg)
"A" & "B"	233.8	13,670	14,496
TOTALS✳✳	233.8	13,670	14,496

✳✳ QUANTITIES FOR BARRIER RAIL ARE NOT INCLUDED

GROOVING BRIDGE FLOORS

APPROACH SLABS	192.3 SQ.METER
BRIDGE DECK	731.4 SQ.METER
TOTAL	923.7 SQ.METER

CLASS AA CONCRETE

POUR #1	69.6m³
POUR #2	164.2m³
TOTAL	233.8m³

SUPERSTRUCTURE REINFORCING STEEL LENGTHS ARE BASED ON THE FOLLOWING MINIMUM SPLICE LENGTHS

BAR SIZE	SUPERSTRUCTURE EXCEPT APPROACH SLABS, PARAPET, AND BARRIER RAIL		APPROACH SLABS		PARAPET AND BARRIER RAIL
	EPOXY COATED	UNCOATED	EPOXY COATED	UNCOATED	
#13	610	540	610	540	840
#16	770	660	770	660	1050
#19	920	790	1190	790	1330
#22	1580	1060			
#25	2080	1390			

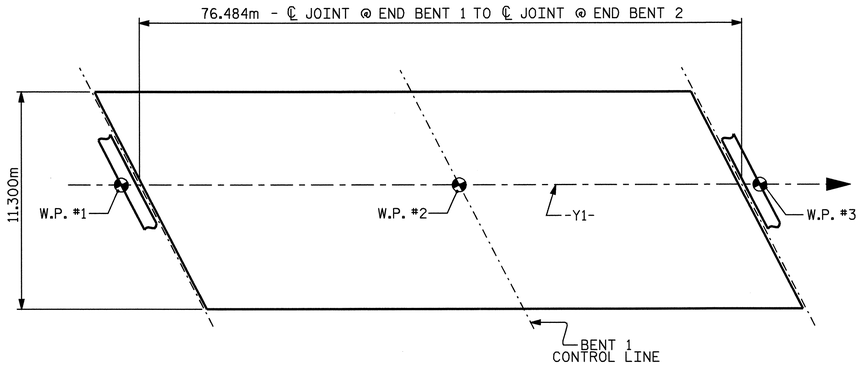

LAYOUT FOR COMPUTING AREA OF REINFORCED CONCRETE DECK SLAB (SQ. METER = 864.3)

NORTH CAROLINA PROFESSIONAL SEAL 23371 ENGINEER VIPUL A. PATTEL
5/12/06

PROJECT NO. R-0609IA
GUILFORD COUNTY
STATION: 13+45.031-L-

STATE OF NORTH CAROLINA
DEPARTMENT OF TRANSPORTATION
RALEIGH

STANDARD

SUPERSTRUCTURE BILL OF MATERIAL

REVISIONS						SHEET NO.
NO.	BY:	DATE:	NO.	BY:	DATE:	S-22
1			3			TOTAL SHEETS
2			4			321

ASSEMBLED BY : M.K. BEARD DATE :08/02/04
CHECKED BY : S.H. SOCKWELL DATE : 10/04
DRAWN BY : JMB 5/87 REV. 5/16/97 EEM/RGW
CHECKED BY : SJD 9/87

22-MAY-2006 09:16
T:\STRUCT~1\FINALP~1\Str\R-0609IA_sd_BM_01.dgn
klayne

STR. #1

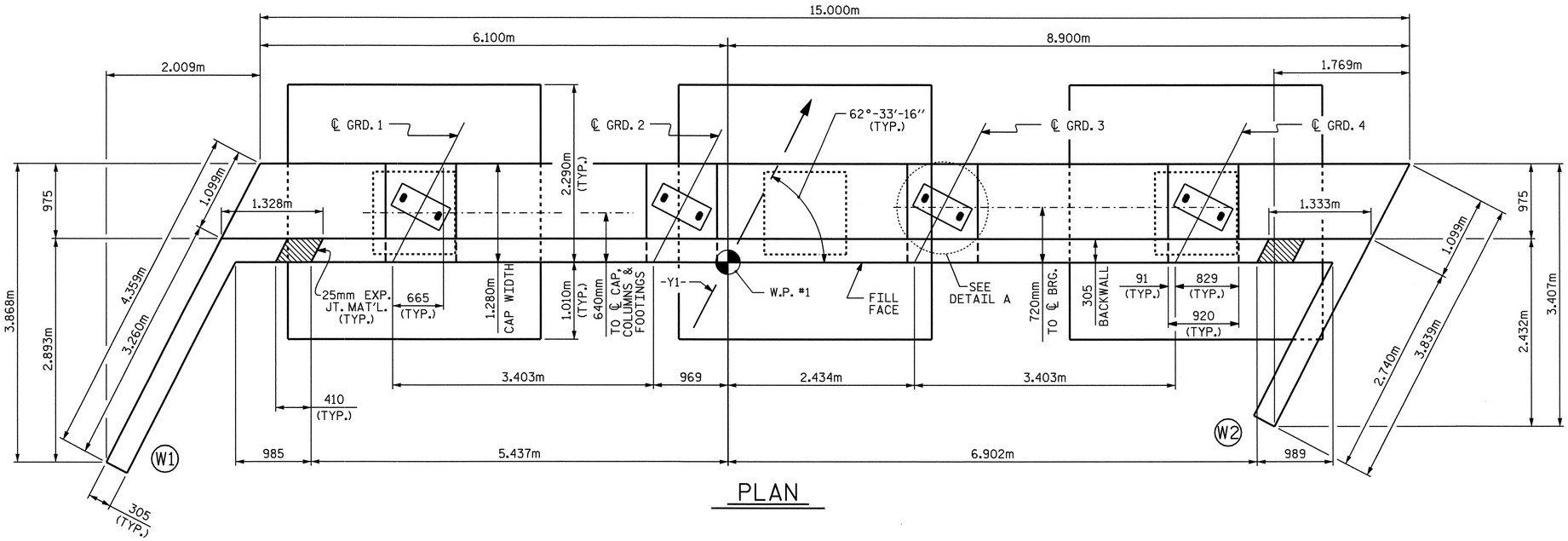

PLAN

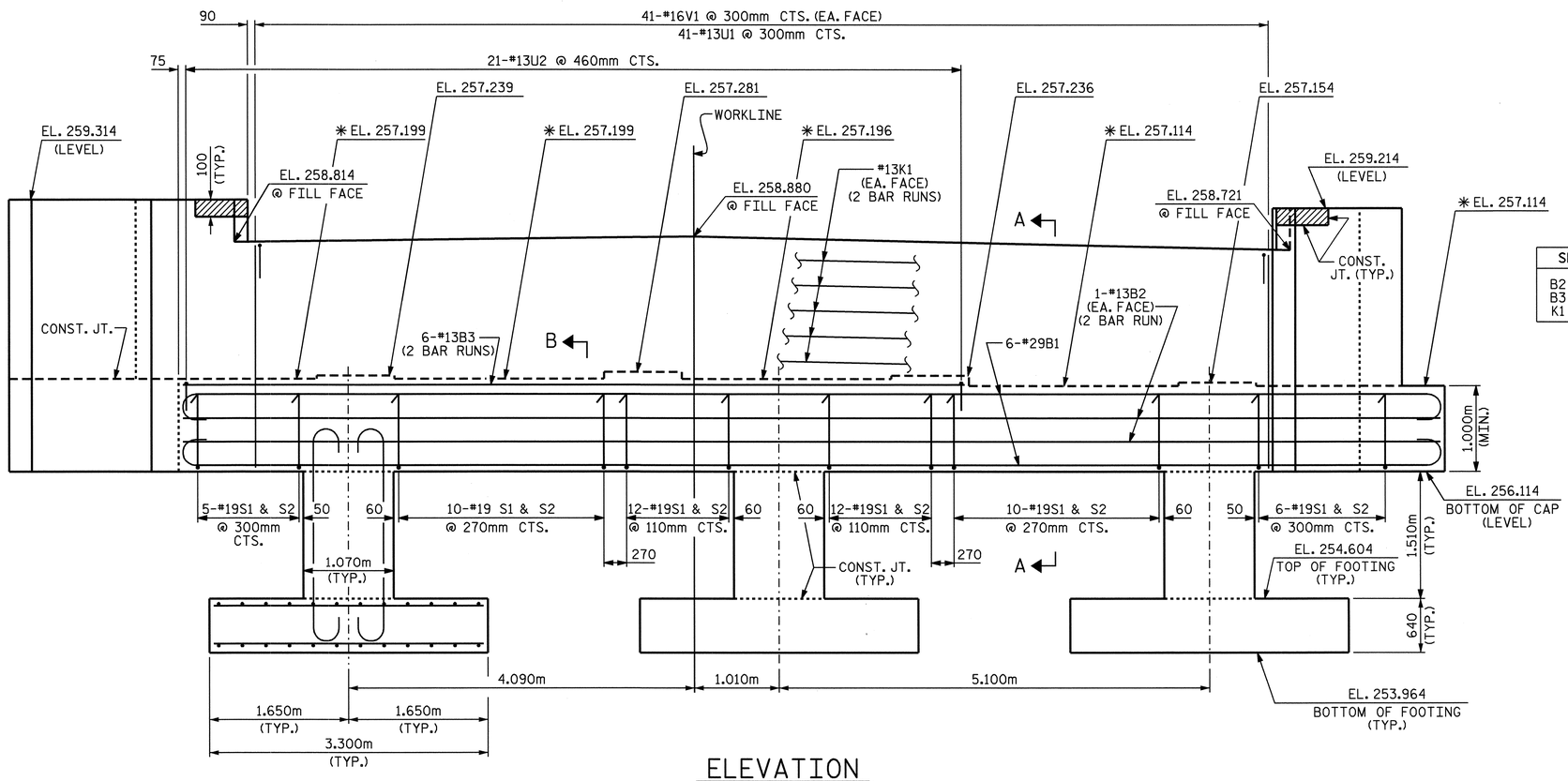

ELEVATION

✳SEE SHEET 3 OF 4 FOR LOCATION OF ELEVATION.
FOR ADDITIONAL REINFORCING STEEL IN COLUMNS AND FOOTINGS, SEE SHEET 3 OF 4.

NOTES

STIRRUPS IN CAP MAY BE SHIFTED AS NECESSARY TO CLEAR ANCHOR BOLTS.

FOR EPOXY PROTECTIVE COATING, SEE SPECIAL PROVISIONS.

BACKWALL SHALL BE PLACED BEFORE APPLYING THE EPOXY PROTECTIVE COATING.

THE TOP SURFACE OF THE CAP EXCEPT THE BRIDGE SEAT BUILDUPS SHALL BE SLOPED TRANSVERSELY FROM THE FILL FACE TO THE BACK FACE AT THE RATE OF 2%.

THE CONTRACTOR SHALL PROVIDE FOR INSTALLATION OF THE 102mm DIAMETER DRAIN PIPE THROUGH THE WING WALL AS REQUIRED FOR REINFORCED BRIDGE APPROACH FILLS, SEE THE ROADWAY PLANS. REINFORCING STEEL IN THE WING WALL MAY BE SHIFTED AS NECESSARY TO CLEAR THE DRAIN PIPE.

THE CONCRETE IN THE SHADED AREA OF THE WING SHALL BE POURED AFTER THE JOINT IN THE DECK AND APPROACH SLAB HAS BEEN SAWED AND THE PARAPET AND END POST ARE CAST IF SLIP FORMING IS USED.

EPOXY COAT THE END BENT CAP AFTER ADJUSTMENTS ARE MADE TO BEARINGS AND ANCHOR BOLTS ARE GROUTED.

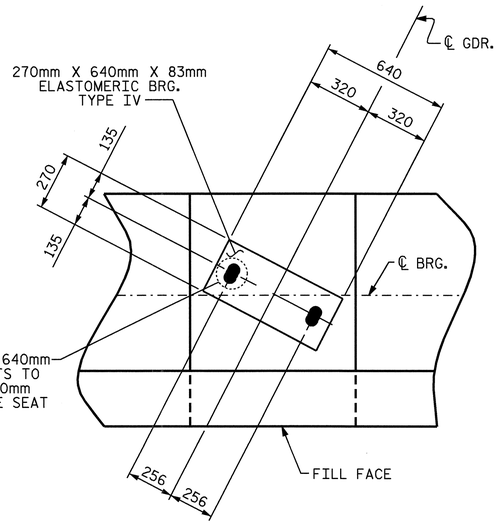

SPLICE CHART		
B2	#13	740mm
B3	#13	740mm
K1	#13	740mm

DETAIL A

(TYP. EACH GIRDER)

PROJECT NO. R-0609IA
GUILFORD COUNTY
STATION: 13+45.031-L-

SHEET 1 OF 4

NORTH CAROLINA PROFESSIONAL SEAL 23371 ENGINEER VIPUL A. PATEL
5/22/06

STATE OF NORTH CAROLINA
DEPARTMENT OF TRANSPORTATION
RALEIGH

SUBSTRUCTURE

END BENT #1

REVISIONS						SHEET NO.
NO.	BY:	DATE:	NO.	BY:	DATE:	S-23
1			3			TOTAL SHEETS
2			4			321

STR. #1

DRAWN BY : J.P. ADAMS DATE : 3/10/05
CHECKED BY : M.K. BEARD DATE : 3/05

22-MAY-2006 09:18
T:\Structures\Final Plans\Str\R-0609IA_sd_EBTS_01.dgn
klayne

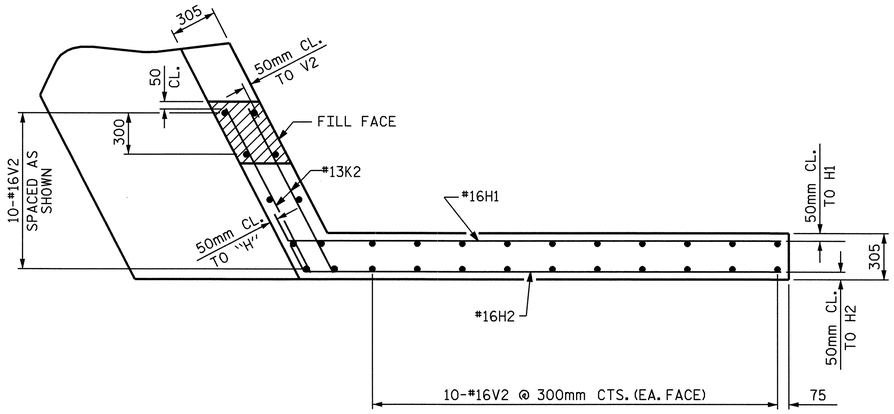

PLAN W1

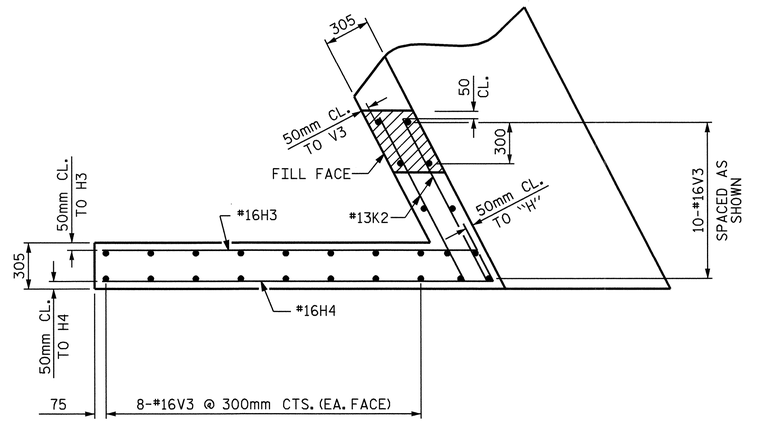

PLAN W2

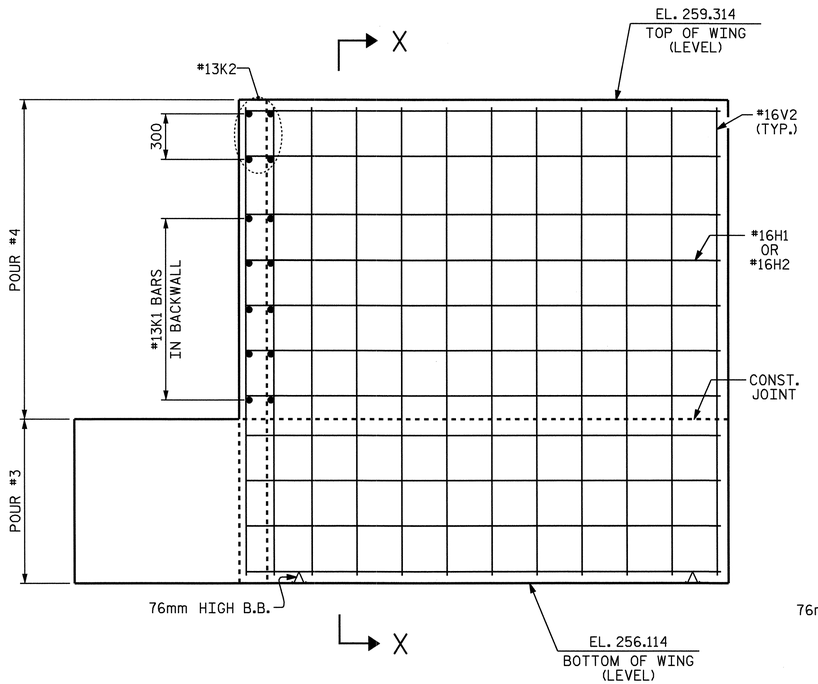

ELEVATION W1

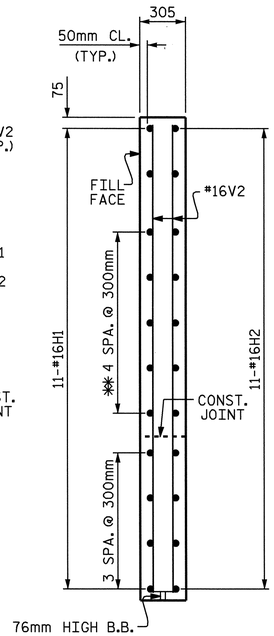

X-X

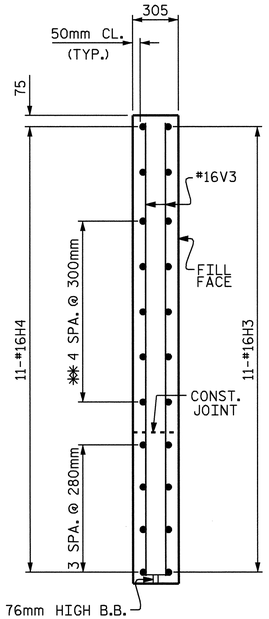

Y-Y

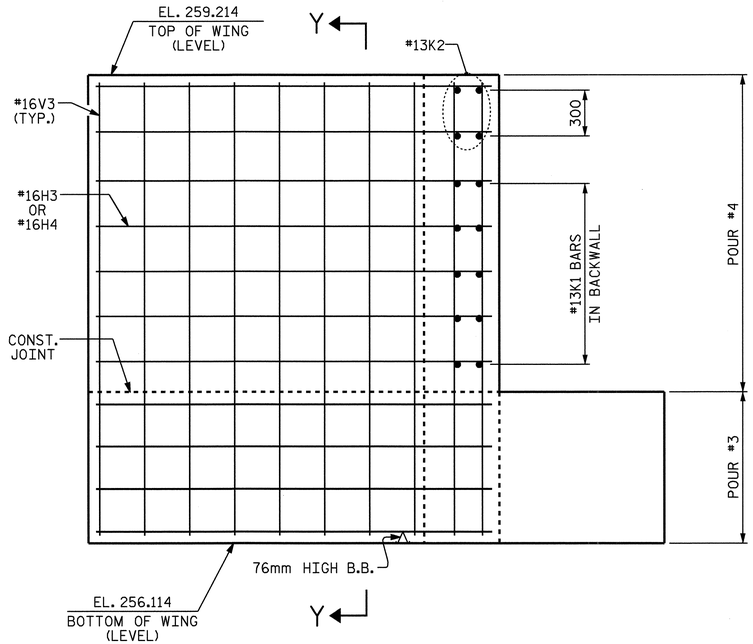

ELEVATION W2

✱✱ THESE BARS TO MATCH K1 BARS IN BACKWALL

PROJECT NO. R-0609IA

GUILFORD COUNTY

STATION: 13+45.031-L-

SHEET 2 OF 4

STATE OF NORTH CAROLINA
DEPARTMENT OF TRANSPORTATION
RALEIGH

SUBSTRUCTURE

END BENT #1

NORTH CAROLINA PROFESSIONAL SEAL 23371 ENGINEER PAUL A. PATEL
5/22/06

REVISIONS						SHEET NO.
NO.	BY:	DATE:	NO.	BY:	DATE:	S-24
1			3			TOTAL SHEETS
2			4			321

STR. #1

DRAWN BY : J.P. ADAMS DATE : 3/9/05
CHECKED BY : M.K. BEARD DATE : 3/05

22-MAY-2006 09:19
T:\Structures\Final Plans\Str\R-0609IA_sd_EBTS_01.dgn
klayne

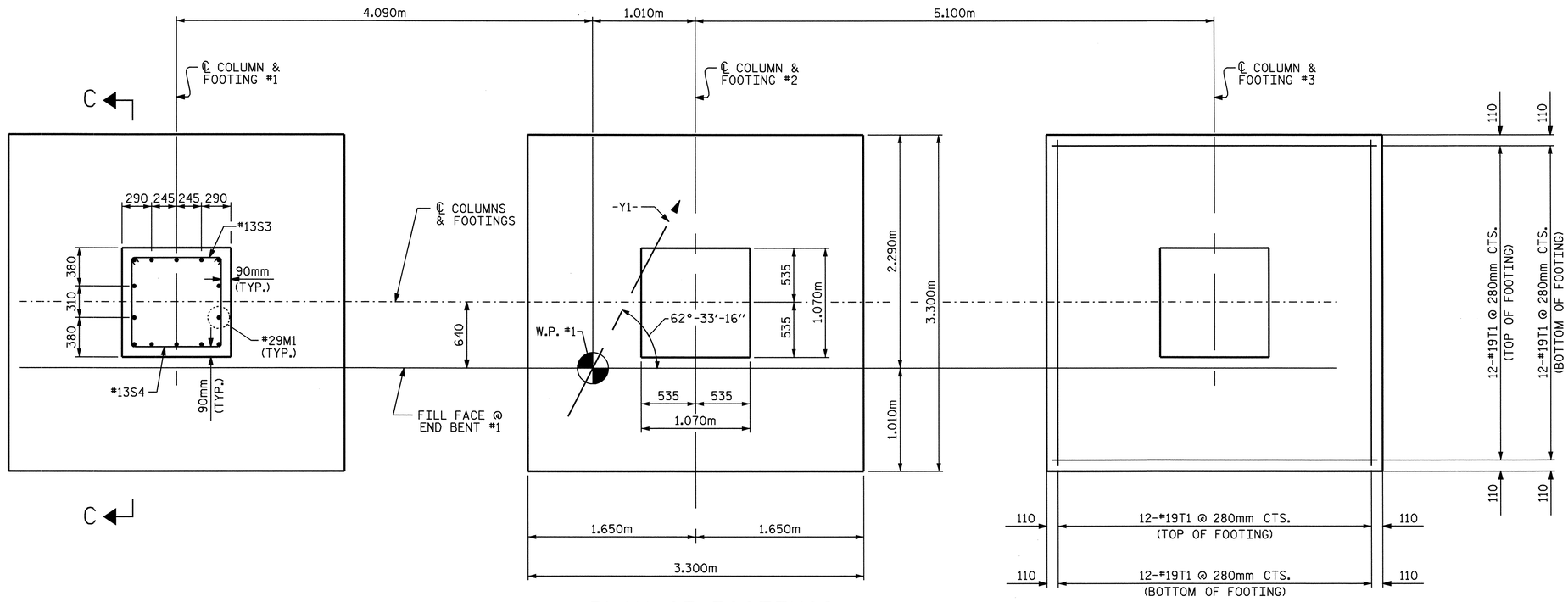

PLAN OF FOOTINGS

FOOTINGS, COLUMNS AND REINFORCING STEEL ARE TYPICAL.

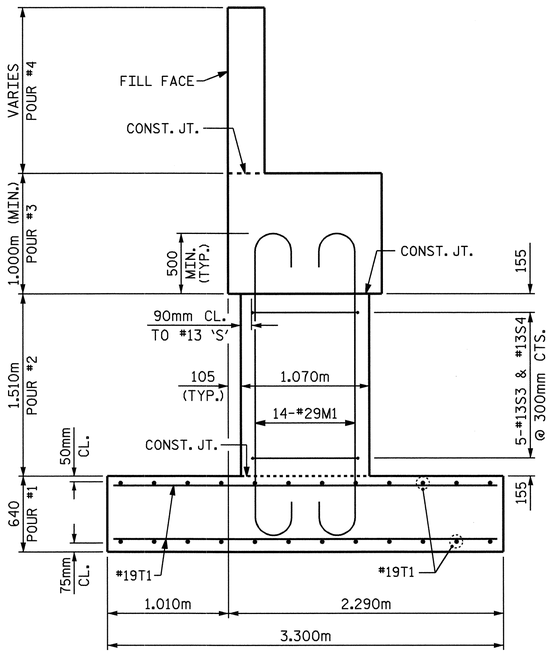

SECTION C-C

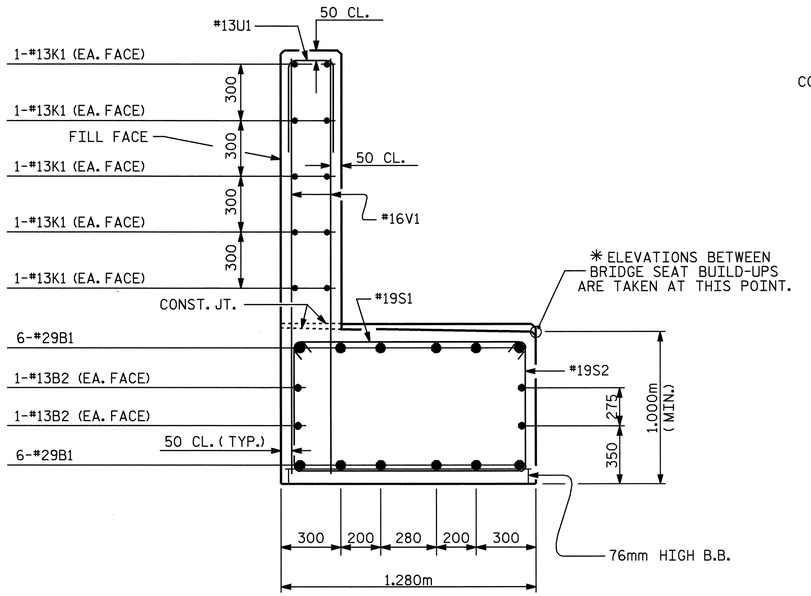

SECTION A-A

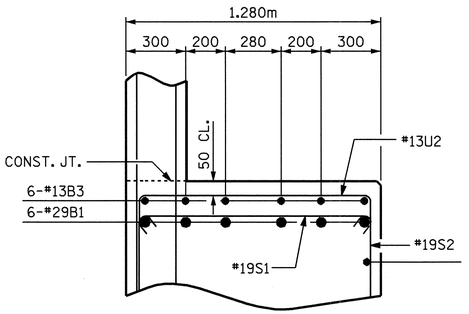

PARTIAL SECTION B

PROJECT NO. R-0609IA

GUILFORD COUNTY

STATION: 13+45.031-L-

SHEET 3 OF 4

STATE OF NORTH CAROLINA
DEPARTMENT OF TRANSPORTATION
RALEIGH

SUBSTRUCTURE

END BENT #1

NORTH CAROLINA PROFESSIONAL SEAL 23371 ENGINEER VIPUL A. PATEL
5/22/06

REVISIONS						SHEET NO.
NO.	BY:	DATE:	NO.	BY:	DATE:	S-25
1			3			TOTAL SHEETS
2			4			321

DRAWN BY : J.P. ADAMS DATE : 3/4/05
CHECKED BY : M.K. BEARD DATE : 3/05

22-MAY-2006 09:18
T:\Structures\Final Plans\Str\R-0609IA_sd_EBTS_01.dgn
klayne

STR. #1

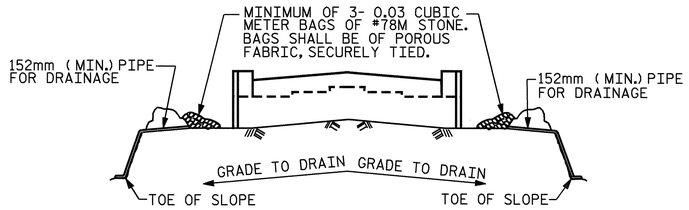

BAGGED STONE AND PIPE SHALL BE PLACED IMMEDIATELY AFTER COMPLETION OF END BENT EXCAVATION. PIPE MAY BE EITHER CONCRETE, CORRUGATED STEEL, CORRUGATED ALUMINUM ALLOY, OR CORRUGATED PLASTIC. PERFORATED PIPE WILL NOT BE ALLOWED.

BAGGED STONE SHALL REMAIN IN PLACE UNTIL THE ENGINEER DIRECTS THAT IT BE REMOVED. THE CONTRACTOR SHALL REMOVE AND DISPOSE OF SILT ACCUMULATIONS AT BAGGED STONE WHEN SO DIRECTED BY THE ENGINEER. BAGS SHALL BE REMOVED AND REPLACED WHENEVER THE ENGINEER DETERMINES THAT THEY HAVE DETERIORATED AND LOST THEIR EFFECTIVENESS.

NO SEPARATE PAYMENT WILL BE MADE FOR THIS WORK AND THE ENTIRE COST OF THIS WORK SHALL BE INCLUDED IN THE UNIT CONTRACT PRICE FOR THE SEVERAL PAY ITEMS.

TEMPORARY DRAINAGE AT END BENT

BAR TYPES

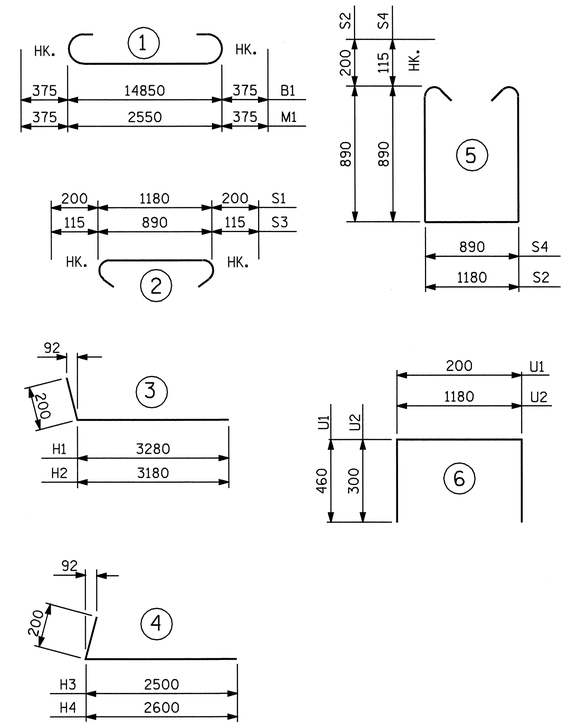

ALL BAR DIMENSIONS ARE OUT TO OUT.

BILL OF MATERIAL

END BENT #1

BAR	NO.	SIZE	TYPE	LENGTH	WEIGHT
B1	12	#29	1	15600	947
B2	8	#13	STR	7880	63
B3	12	#13	STR	5340	64
H1	11	#16	3	3480	59
H2	11	#16	3	3380	58
H3	11	#16	4	2700	46
H4	11	#16	4	2800	48
K1	20	#13	STR	7880	157
K2	8	#13	STR	1220	10
M1	42	#29	1	3300	701
S1	55	#19	2	1580	194
S2	55	#19	5	3360	413
S3	15	#13	2	1120	17
S4	15	#13	5	2900	43
U1	41	#13	6	1120	46
U2	21	#13	6	1780	37
V1	82	#16	STR	2500	318
V2	30	#16	STR	3100	144
V3	26	#16	STR	3000	121
T1	144	#19	STR	3200	1030

REINFORCING STEEL = 4516 KG

CLASS A CONCRETE BREAKDOWN:

POUR #1: (FOOTINGS)	20.9 m³
POUR #2: (COLUMNS)	5.2 m³
POUR #3: (CAP & BOTTOM OF WINGS)	22.1 m³
POUR #4: (TOP OF WINGS & BACKWALL)	9.0 m³
CLASS A CONCRETE TOTAL	57.2 m³

FOUNDATION EXCAVATION LUMP SUM

DRAWN BY : J.P. ADAMS DATE : 3/10/05
CHECKED BY : M.K. BEARD DATE : 3/05

22-MAY-2006 09:19
T:\Structures\Final Plans\Str\R-0609IA_sd_EBTS_01.dgn
klayne

PROJECT NO. R-0609IA
GUILFORD COUNTY
STATION: 13+45.031-L-

SHEET 4 OF 4

STATE OF NORTH CAROLINA
DEPARTMENT OF TRANSPORTATION
RALEIGH

SUBSTRUCTURE

END BENT #1

REVISIONS						SHEET NO.
NO.	BY:	DATE:	NO.	BY:	DATE:	S-26
1			3			TOTAL SHEETS
2			4			321

STR. #1

NOTES

STIRRUPS AND "V" BARS IN CAP MAY BE SHIFTED AS NECESSARY TO CLEAR ANCHOR BOLTS.

HOOKS ON "V" BARS MAY BE TURNED AS NECESSARY FOR PLACING REINFORCING STEEL.

THE CONTRACTOR'S ATTENTION IS CALLED TO THE FACT THAT 'M' BARS, THE LONGITUDINAL REINFORCEMENT FOR THE COLUMN IS DETAILED WITH 1 METER OF EXTRA LENGTH.

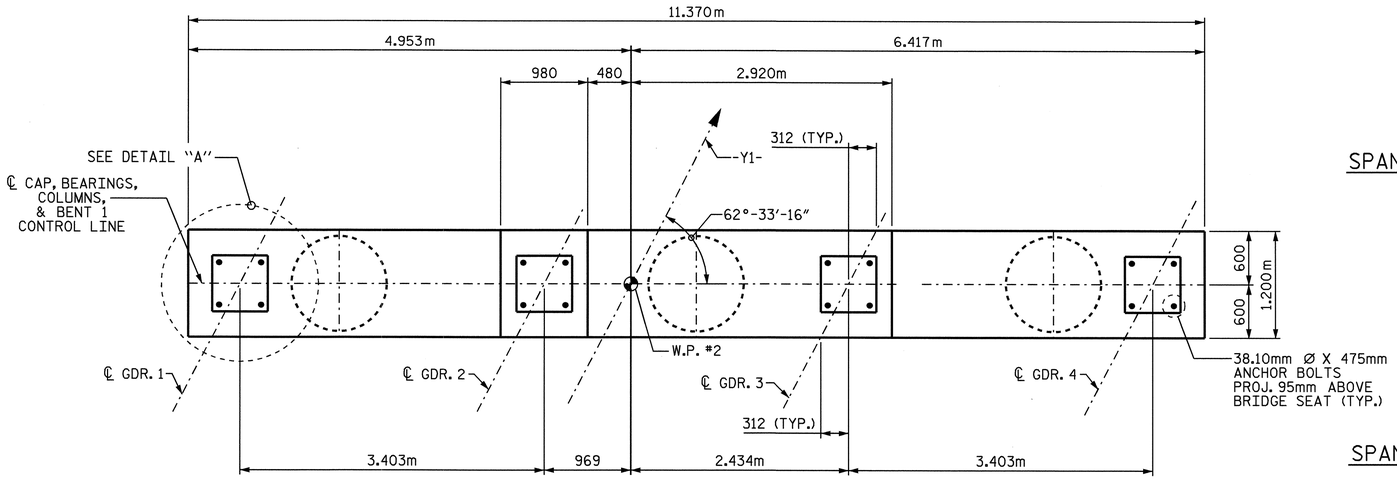

PLAN

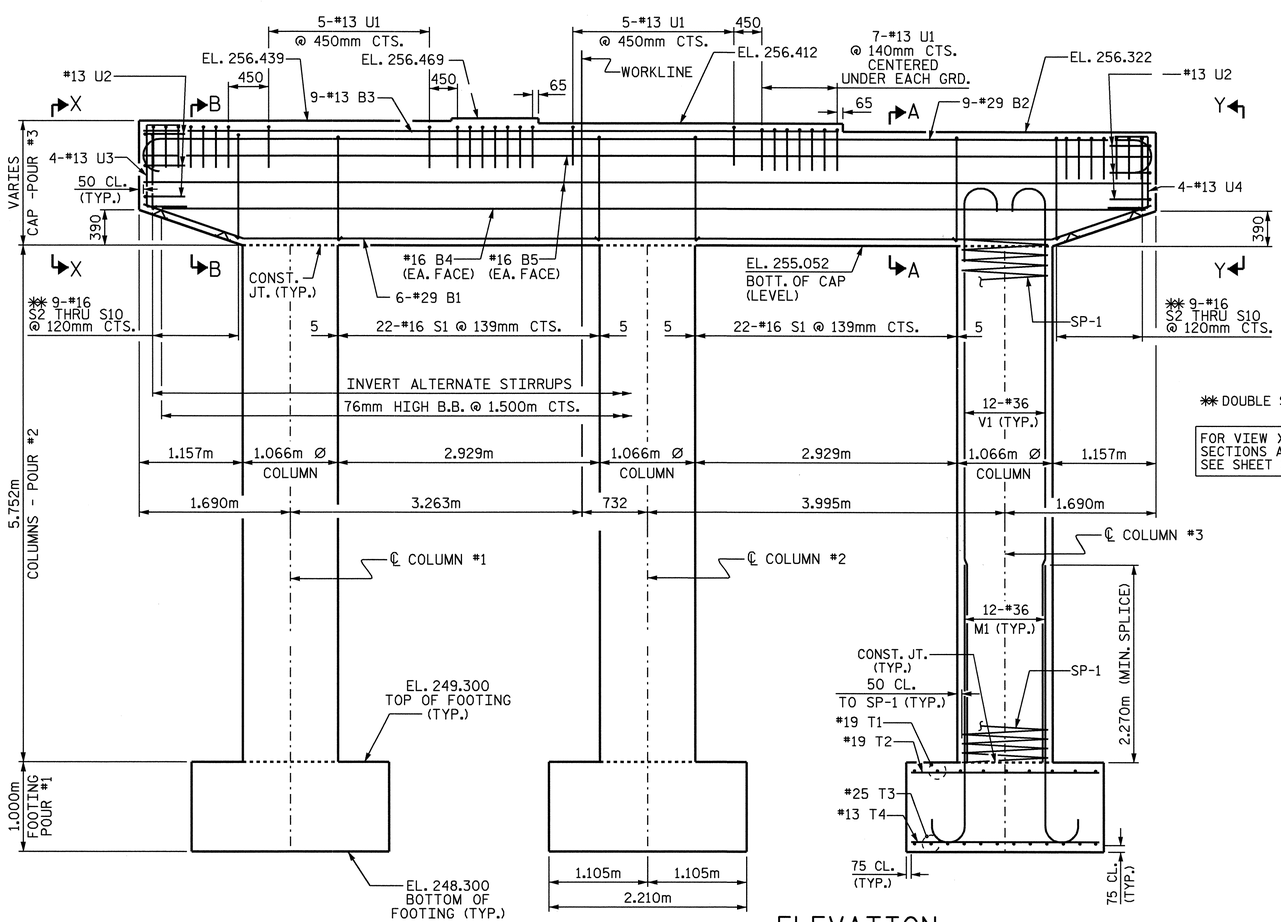

ELEVATION

(REINFORCING STEEL AND DIMENSIONS ARE TYPICAL FOR ALL COLUMNS AND FOOTINGS)

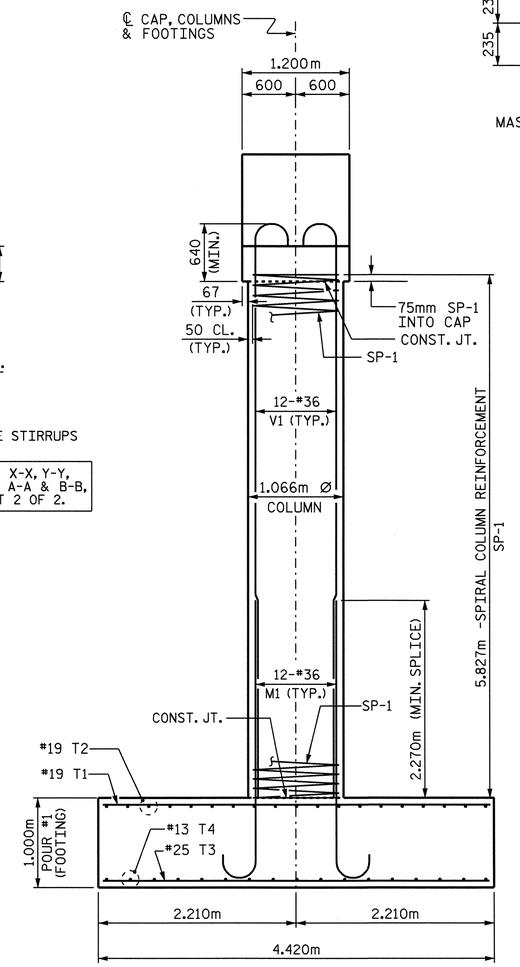

END VIEW

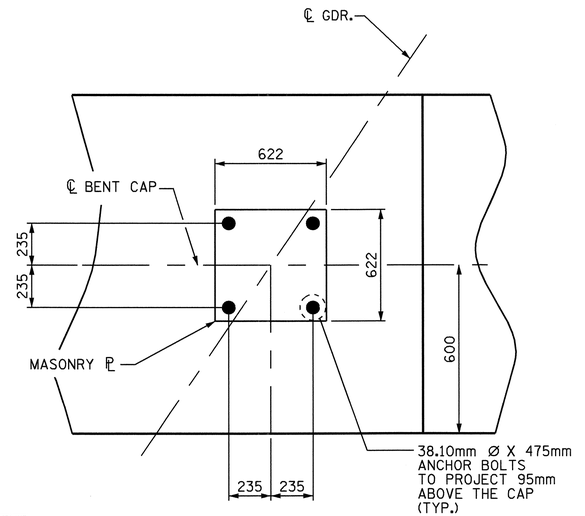

DETAIL "A"

PROJECT NO. R-0609IA

GUILFORD COUNTY

STATION: 13+45.031 -L-

SHEET 1 OF 2

STATE OF NORTH CAROLINA
DEPARTMENT OF TRANSPORTATION
RALEIGH

SUBSTRUCTURE

BENT 1

REVISIONS						SHEET NO.
NO.	BY:	DATE:	NO.	BY:	DATE:	S-27
1			3			TOTAL SHEETS
2			4			321

STR. #1

DRAWN BY : A. K. PATEL DATE : 1/12/05
CHECKED BY : D. V. JOYNER DATE : 2/01/05

07-NOV-2006 08:31
R:\Structures\Final Plans\Str\R0609IA_SD_BI_01.dgn
kbeard

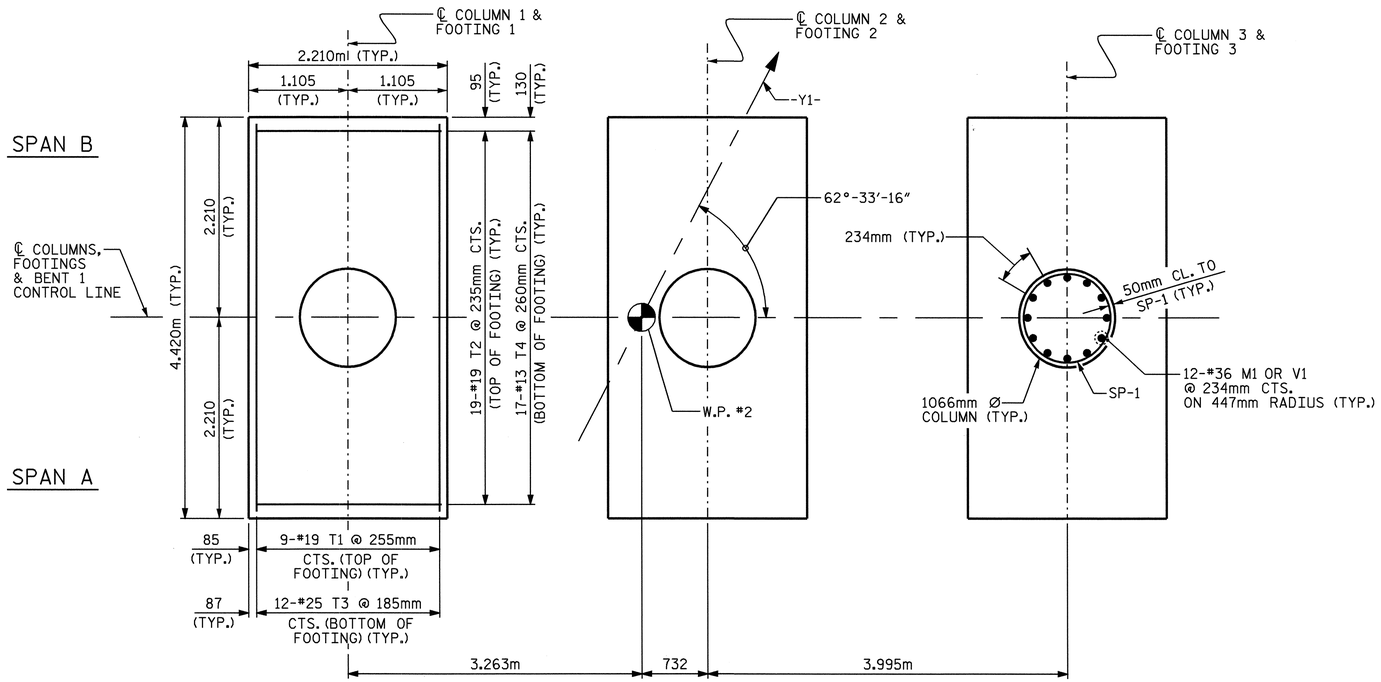

PLAN OF FOOTINGS & COLUMNS

REINFORCING STEEL, DIMENSIONS AND DETAILS ARE TYPICAL FOR EACH COLUMN AND FOOTING UNLESS OTHERWISE NOTED.

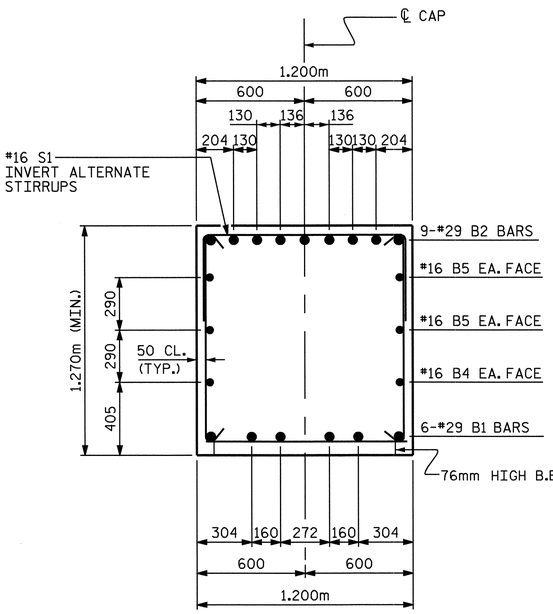

SECTION A-A

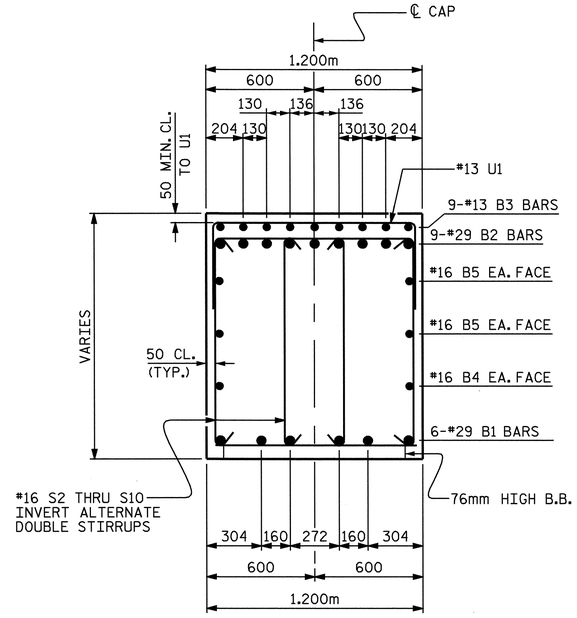

SECTION B-B

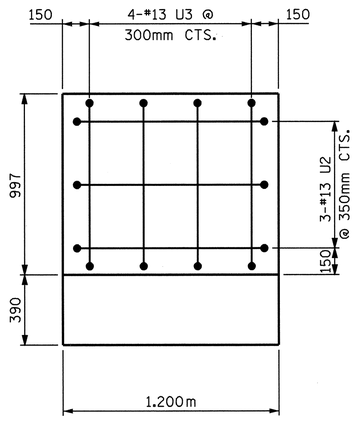

VIEW X-X

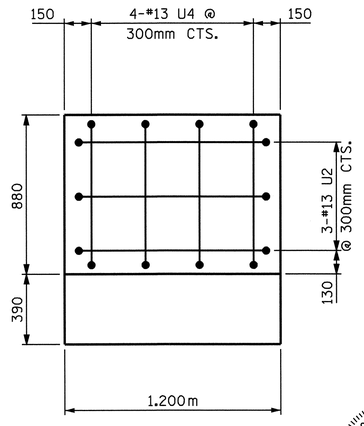

VIEW Y-Y

BAR TYPES

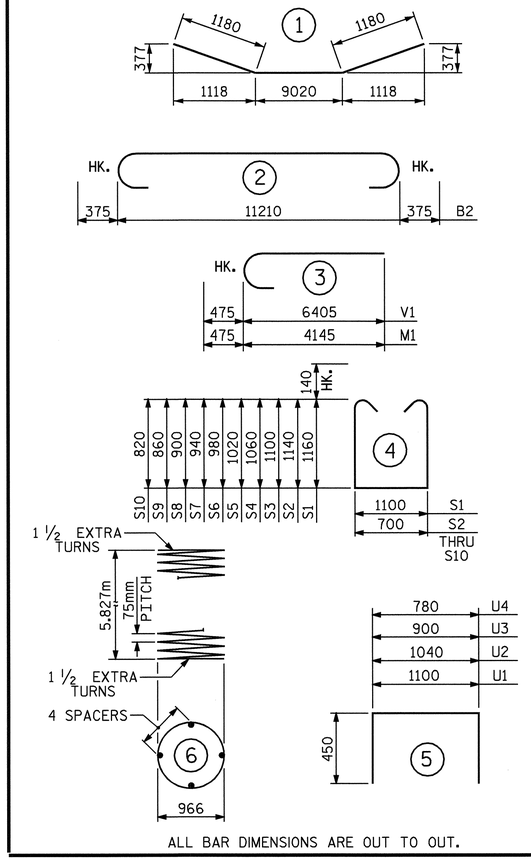

ALL BAR DIMENSIONS ARE OUT TO OUT.

BILL OF MATERIAL

BENT 1

BAR	NO.	SIZE	TYPE	LENGTH	WEIGHT
B1	6	29	1	11380	345
B2	9	29	2	11960	545
B3	9	13	STR	7760	69
B4	2	16	STR	11000	34
B5	4	16	STR	11260	70
M1	36	36	3	4620	1315
S1	44	16	4	3740	255
S2	4	16	4	3260	20
S3	4	16	4	3180	20
S4	4	16	4	3100	19
S5	4	16	4	3020	19
S6	4	16	4	2940	18
S7	4	16	4	2860	18
S8	4	16	4	2780	17
S9	4	16	4	2700	17
S10	4	16	4	2620	16
T1	27	19	STR	4320	261
T2	57	19	STR	2100	268
T3	36	25	STR	4320	618
T4	51	13	STR	2100	106
U1	38	13	5	2000	76
U2	6	13	5	1940	12
U3	4	13	5	1800	7
U4	4	13	5	1680	7
V1	36	36	3	6880	1958

TOTAL REINFORCING STEEL	6110

SPIRAL REINFORCING STEEL					(kg)
SP-1	3	**	6	242660	724
TOTAL SPIRAL REINFORCING STEEL (kg)					724

CLASS A CONCRETE BREAKDOWN	
POUR #1 (FOOTINGS)	29.3 C.M.
POUR #2 (COLUMNS)	15.4 C.M.
POUR #3 (BENT CAP)	17.8 C.M.
TOTAL CLASS A CONCRETE	62.5 C.M.
FOUNDATION EXCAVATION	LUMP SUM

** THE SP-1 SPIRAL REINFORCING STEEL SHALL BE W20 OR D-20 COLD DRAWN WIRE OR #13 PLAIN OR DEFORMED BAR.

PROJECT NO. R-0609IA

GUILFORD COUNTY

STATION: 13+45.031-L-

SHEET 2 OF 2

STATE OF NORTH CAROLINA
DEPARTMENT OF TRANSPORTATION
RALEIGH

SUBSTRUCTURE

BENT 1

NORTH CAROLINA PROFESSIONAL SEAL 23371 ENGINEER DIPU A. PATEL
5/22/06

REVISIONS						SHEET NO.
NO.	BY:	DATE:	NO.	BY:	DATE:	S-28
1			3			TOTAL SHEETS
2			4			321

DRAWN BY : A. K. PATEL DATE : 01/18/04
CHECKED BY : D. V. JOYNER DATE : 2/01/05

22-MAY-2006 09:22
T:\Structures\Final Plans\Str\R0609IA_SD_BI_01.dgn
klayne

STR. #1

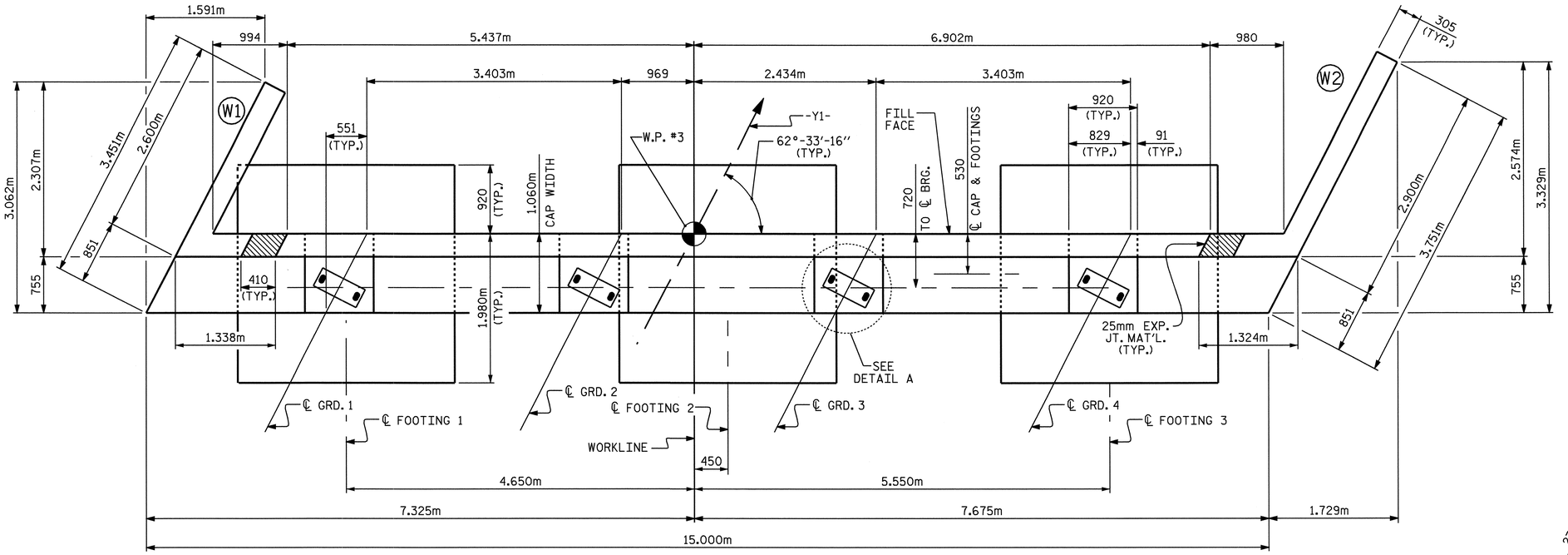

PLAN

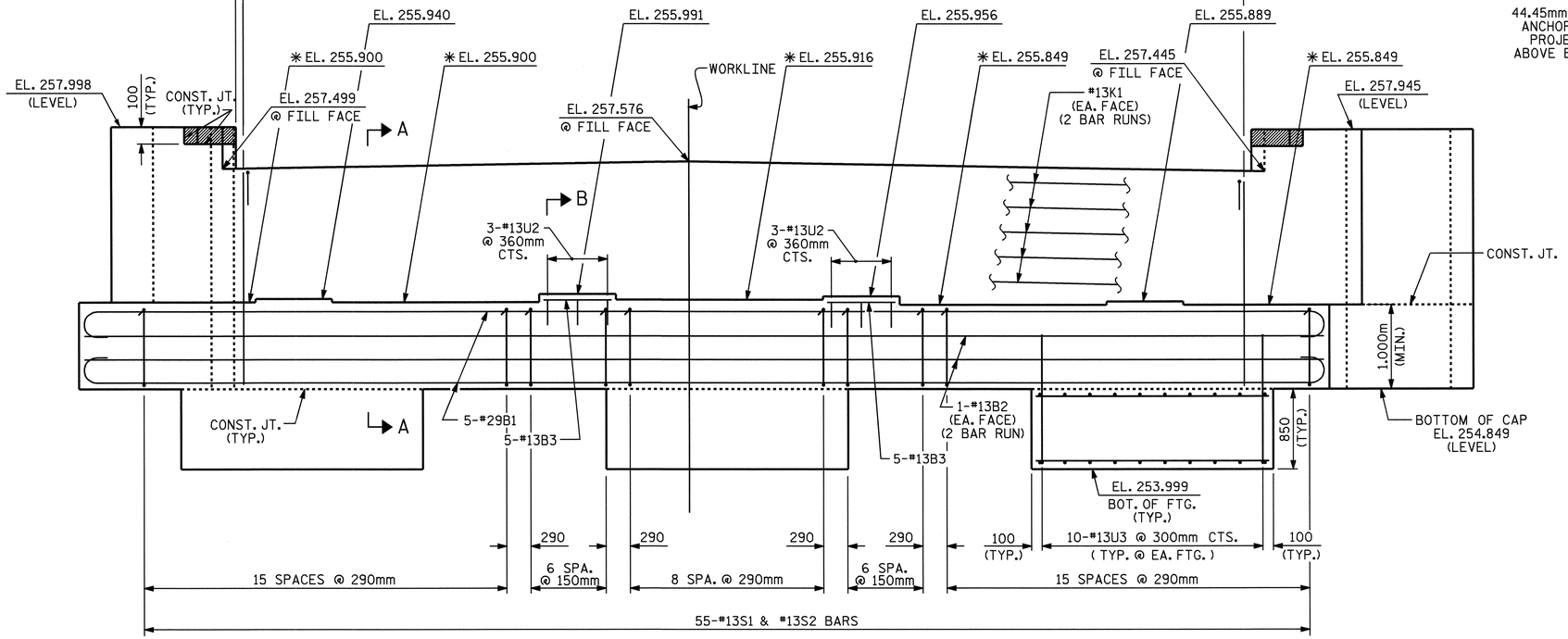

ELEVATION

✳SEE SHEET 3 OF 4 FOR LOCATION OF ELEVATION.
FOR ADDITIONAL REINFORCING STEEL IN FOOTINGS, SEE SHEET 3 OF 4.

SPLICE CHART		
B2	#13	740mm
K1	#13	740mm

NOTES

STIRRUPS IN CAP MAY BE SHIFTED AS NECESSARY TO CLEAR ANCHOR BOLTS.

FOR EPOXY PROTECTIVE COATING, SEE SPECIAL PROVISIONS.

BACKWALL SHALL BE PLACED BEFORE APPLYING THE EPOXY PROTECTIVE COATING.

THE TOP SURFACE OF THE CAP EXCEPT THE BRIDGE SEAT BUILDUPS SHALL BE SLOPED TRANSVERSELY FROM THE FILL FACE TO THE BACK FACE AT THE RATE OF 2%.

THE CONTRACTOR SHALL PROVIDE FOR INSTALLATION OF THE 102mm DIAMETER DRAIN PIPE THROUGH THE WING WALL AS REQUIRED FOR REINFORCED BRIDGE APPROACH FILLS, SEE THE ROADWAY PLANS. REINFORCING STEEL IN THE WING WALL MAY BE SHIFTED AS NECESSARY TO CLEAR THE DRAIN PIPE.

THE CONCRETE IN THE SHADED AREA OF THE WING SHALL BE POURED AFTER THE JOINT IN THE DECK AND THE APPROACH SLAB HAS BEEN SAWED AND THE PARAPET WALL IS CAST IF SLIP FORMING IS USED.

EPOXY COAT THE END BENT CAP AFTER ADJUSTMENTS ARE MADE TO BEARINGS AND ANCHOR BOLTS ARE GROUTED.

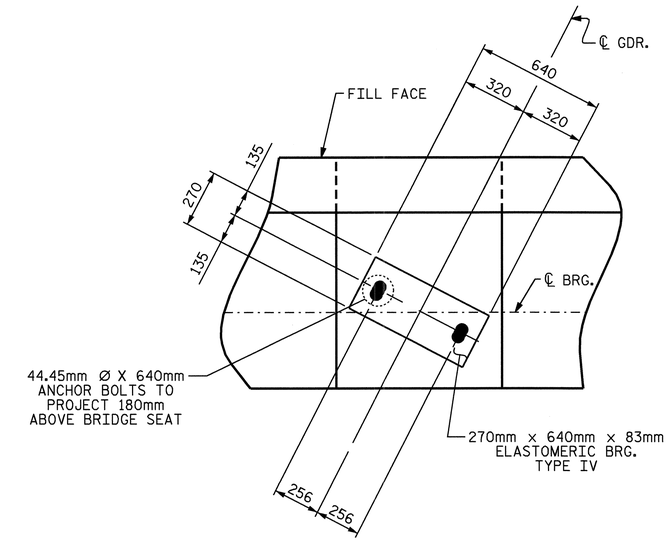

DETAIL A

(TYP. EACH GIRDER)

PROJECT NO. R-0609IA
GUILFORD COUNTY
STATION: 13+45.031-L-

SHEET 1 OF 4

STATE OF NORTH CAROLINA
DEPARTMENT OF TRANSPORTATION
RALEIGH

SUBSTRUCTURE

END BENT #2

NORTH CAROLINA PROFESSIONAL SEAL 23371 ENGINEER PRAFUL A. PATEL
5/22/06

REVISIONS						SHEET NO.
NO.	BY:	DATE:	NO.	BY:	DATE:	S-29
1			3			TOTAL SHEETS
2			4			321

STR. #1

DRAWN BY : J.P. ADAMS DATE : 3/10/05
CHECKED BY : M.K. BEARD DATE : 3/05

22-MAY-2006 09:18
T:\Structures\Final Plans\Str\R-0609IA_sd_EBTS_01.dgn
klayne

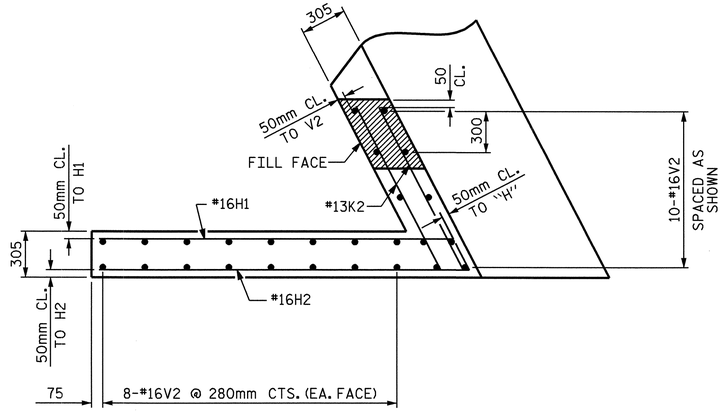

PLAN W1

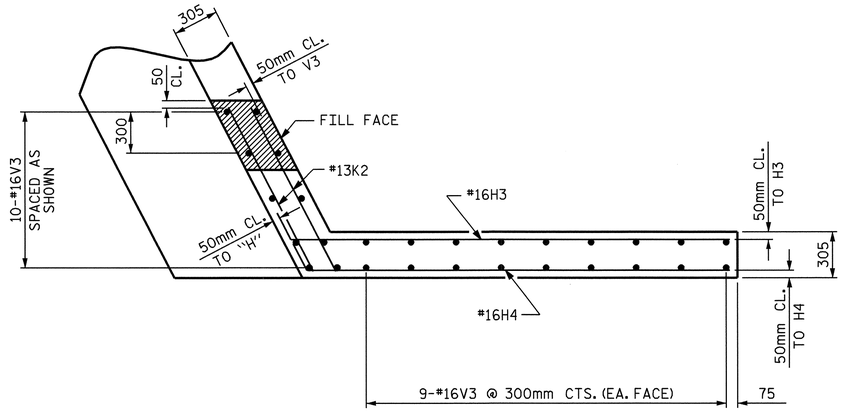

PLAN W2

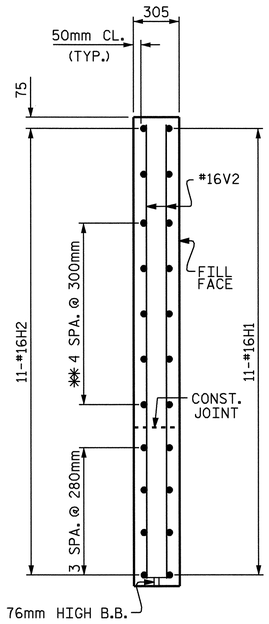

X-X

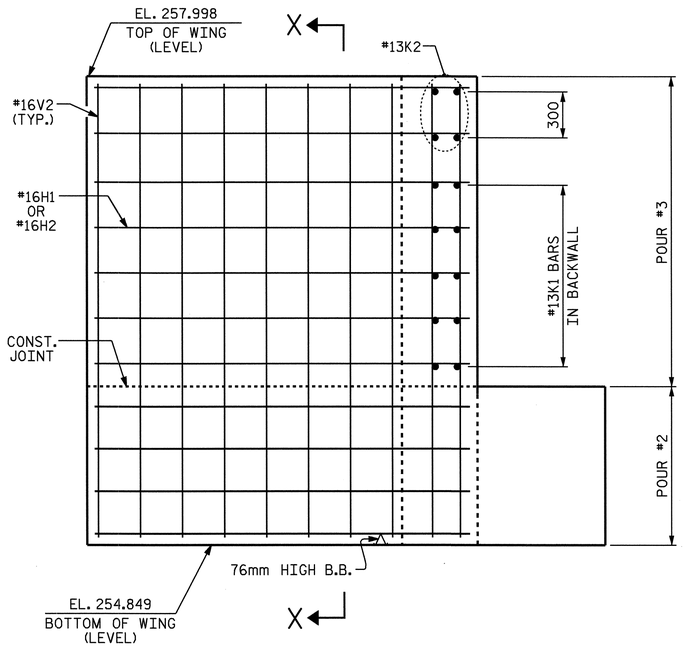

ELEVATION W1

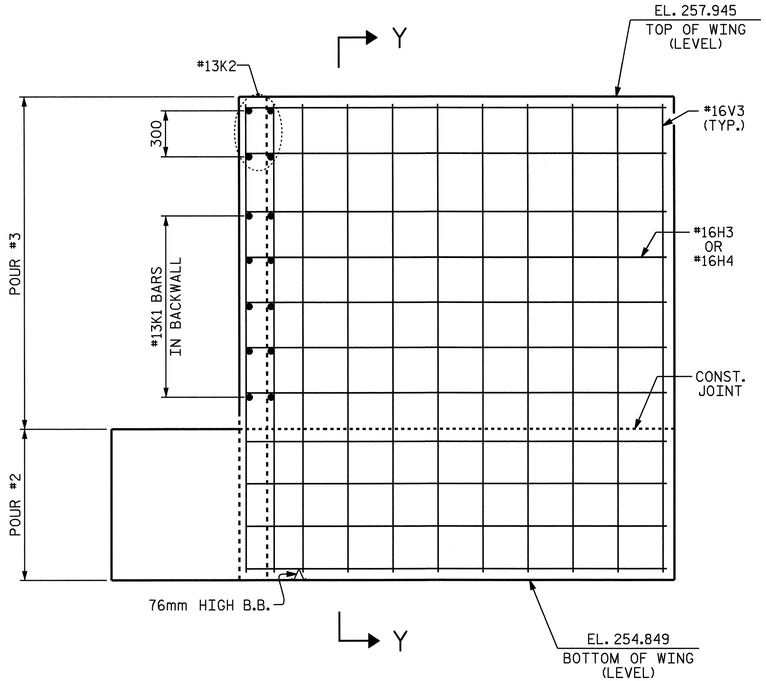

ELEVATION W2

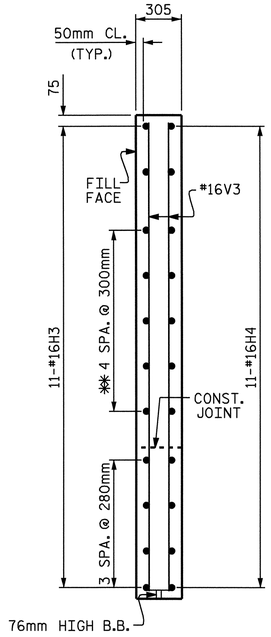

Y-Y

✱✱ THESE BARS TO MATCH K1 BARS IN BACKWALL

NORTH CAROLINA PROFESSIONAL SEAL 23371 ENGINEER VIRUL A. PATEL
5/22/06

PROJECT NO. R-0609IA
GUILFORD COUNTY
STATION: 13+45.031-L-

SHEET 2 OF 4

STATE OF NORTH CAROLINA
DEPARTMENT OF TRANSPORTATION
RALEIGH

SUBSTRUCTURE

END BENT #2

REVISIONS						SHEET NO.
NO.	BY:	DATE:	NO.	BY:	DATE:	S-30
1			3			TOTAL SHEETS
2			4			321

DRAWN BY : J.P. ADAMS DATE : 3/9/05
CHECKED BY : M.K. BEARD DATE : 3/05

22-MAY-2006 09:19
T:\Structures\Final Plans\Str\R-0609IA_sd_EBTS_01.dgn
klayne

STR. #1

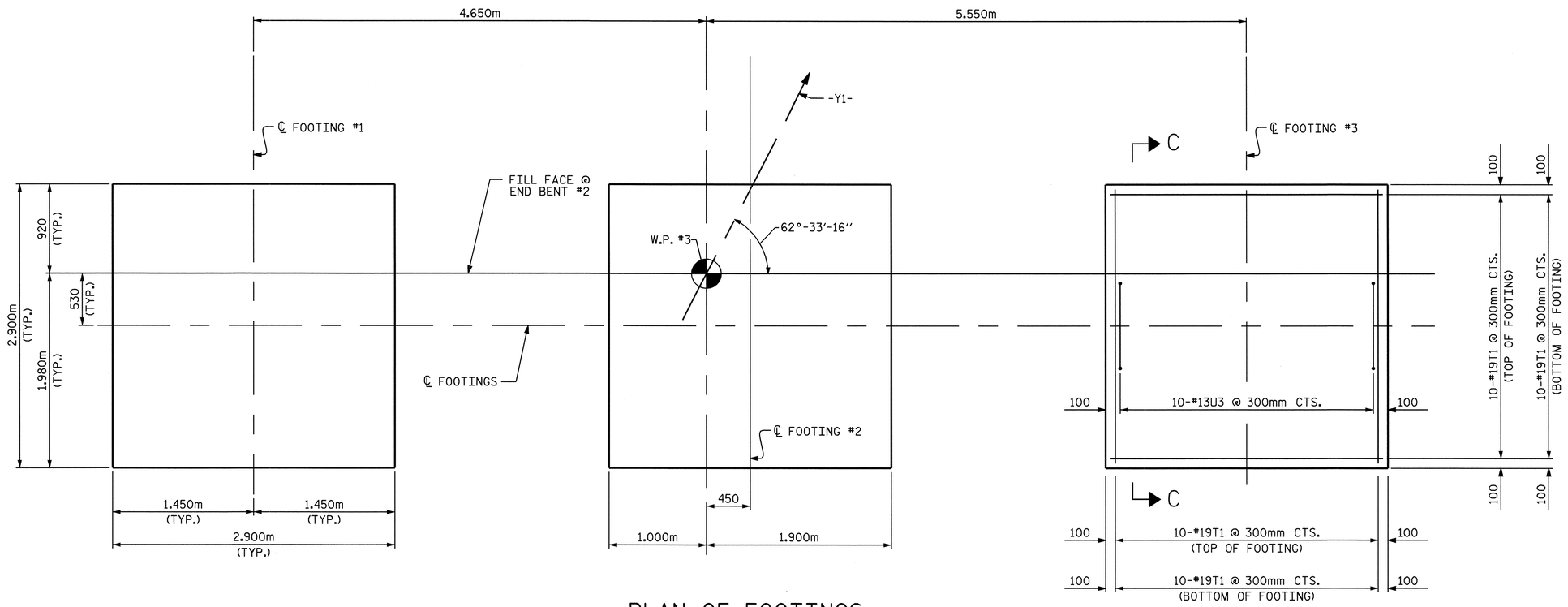

PLAN OF FOOTINGS

FOOTINGS, COLUMNS AND REINFORCING STEEL ARE TYPICAL.

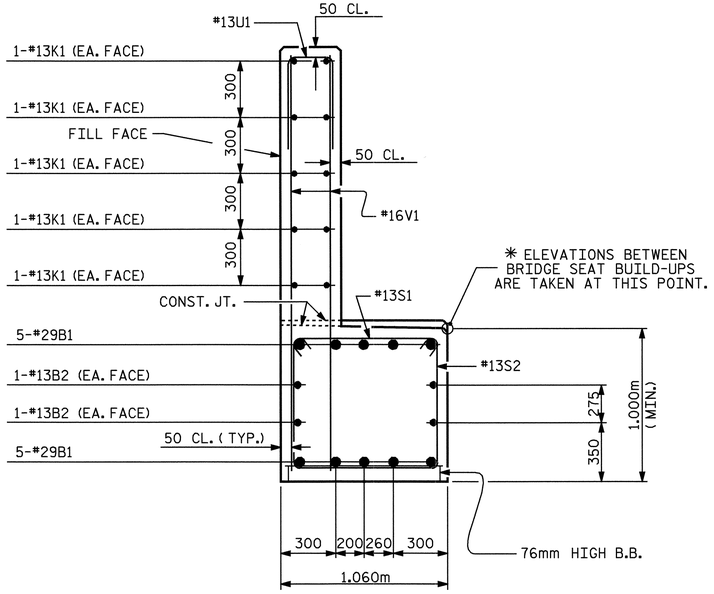

SECTION A-A

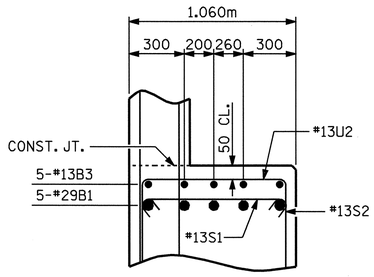

PARTIAL SECTION B

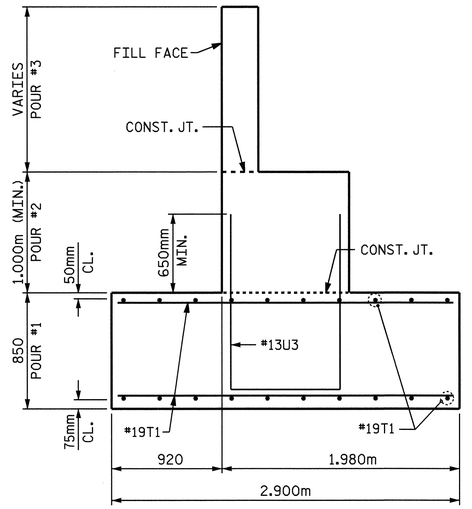

SECTION C-C

PROJECT NO. R-0609IA

GUILFORD COUNTY

STATION: 13+45.031-L-

SHEET 3 OF 4

STATE OF NORTH CAROLINA
DEPARTMENT OF TRANSPORTATION
RALEIGH

SUBSTRUCTURE

END BENT #2

REVISIONS						SHEET NO.
NO.	BY:	DATE:	NO.	BY:	DATE:	S-31
1			3			TOTAL SHEETS
2			4			321

STR. #1

DRAWN BY : J.P. ADAMS DATE : 3/4/05
CHECKED BY : M.K. BEARD DATE : 3/05

22-MAY-2006 09:18
T:\Structures\Final Plans\Str\R-0609IA_sd_EBTS_01.dgn
klayne

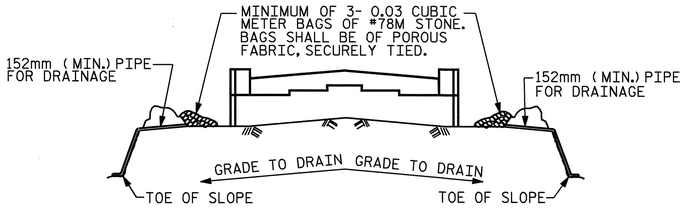

BAGGED STONE AND PIPE SHALL BE PLACED IMMEDIATELY AFTER COMPLETION OF END BENT EXCAVATION. PIPE MAY BE EITHER CONCRETE, CORRUGATED STEEL, CORRUGATED ALUMINUM ALLOY, OR CORRUGATED PLASTIC. PERFORATED PIPE WILL NOT BE ALLOWED.

BAGGED STONE SHALL REMAIN IN PLACE UNTIL THE ENGINEER DIRECTS THAT IT BE REMOVED. THE CONTRACTOR SHALL REMOVE AND DISPOSE OF SILT ACCUMULATIONS AT BAGGED STONE WHEN SO DIRECTED BY THE ENGINEER. BAGS SHALL BE REMOVED AND REPLACED WHENEVER THE ENGINEER DETERMINES THAT THEY HAVE DETERIORATED AND LOST THEIR EFFECTIVENESS.

NO SEPARATE PAYMENT WILL BE MADE FOR THIS WORK AND THE ENTIRE COST OF THIS WORK SHALL BE INCLUDED IN THE UNIT CONTRACT PRICE FOR THE SEVERAL PAY ITEMS.

TEMPORARY DRAINAGE AT END BENT

BAR TYPES

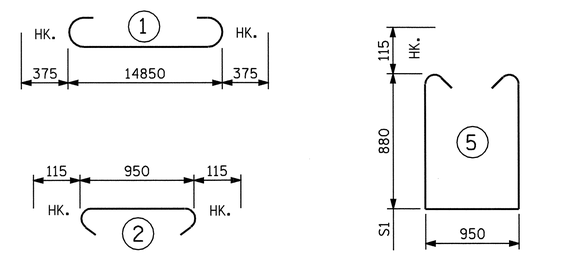

ALL BAR DIMENSIONS ARE OUT TO OUT.

BILL OF MATERIAL
END BENT #2

BAR	NO.	SIZE	TYPE	LENGTH	WEIGHT
B1	10	#29	1	15600	789
B2	8	#13	STR	7880	63
B3	10	#13	STR	820	8
H1	11	#16	3	2560	44
H2	11	#16	3	2660	45
H3	11	#16	4	3120	53
H4	11	#16	4	3020	52
K1	20	#13	STR	7880	157
K2	8	#13	STR	1220	10
S1	55	#13	2	1180	65
S2	55	#13	5	2940	161
U1	41	#13	6	1120	46
U2	6	#13	6	1560	9
U3	30	#13	6	3960	118
V1	82	#16	STR	2500	318
V2	26	#16	STR	3020	122
V3	28	#16	STR	3000	130
T1	120	#19	STR	2800	751

REINFORCING STEEL = 2941 KG

CLASS A CONCRETE BREAKDOWN:

POUR #1: (FOOTINGS) 21.4 m³

POUR #3: (CAP & BOTTOM OF WINGS) 17.8 m³

POUR #4: (TOP OF WINGS & BACKWALL) 10.9 m³

CLASS A CONCRETE TOTAL 50.1 m³

FOUNDATION EXCAVATION LUMP SUM

PROJECT NO. R-0609IA

GUILFORD COUNTY

STATION: 13+45.031-L-

SHEET 4 OF 4

STATE OF NORTH CAROLINA
DEPARTMENT OF TRANSPORTATION
RALEIGH

SUBSTRUCTURE

END BENT #2

NORTH CAROLINA PROFESSIONAL SEAL 23371 ENGINEER VIPUL A. PATEL
5/22/06

REVISIONS						SHEET NO.
NO.	BY:	DATE:	NO.	BY:	DATE:	S-32
1			3			TOTAL SHEETS
2			4			321

DRAWN BY : J.P. ADAMS DATE : 3/10/05
CHECKED BY : M.K. BEARD DATE : 3/05

22-MAY-2006 09:19
T:\Structures\Final Plans\Str\R-0609IA_sd_EBTS_01.dgn
klayne

STR. #1

GENERAL NOTES

SLOPE PROTECTION SHALL BE PLACED UNDER THE ENDS OF THE BRIDGE AS SHOWN IN THE DETAILS. STRAIGHT EDGING WILL NOT BE REQUIRED UNLESS, IN THE OPINION OF THE ENGINEER, VISUAL INSPECTION INDICATES A NEED FOR IT. METHOD OF MEASUREMENT AND BASIS OF PAYMENT SHALL BE AS PRESCRIBED IN SECTION 462 OF THE STANDARD SPECIFICATIONS.

SLOPE PROTECTION SHALL CONSIST OF 100mm POURED-IN-PLACE CONCRETE PAVING AS SHOWN IN THE DETAILS ON THIS SHEET. CONCRETE SHALL BE CLASS "B". THE CONCRETE SURFACE SHALL BE FLOATED WITH A WOODEN FLOAT AND FINISHED. WELDED WIRE FABRIC REINFORCING SHALL BE 152 X 152 - W9.1 X W9.1, 1520mm WIDE. SLOPE PROTECTION SHALL BE POURED IN 1520mm STRIPS AS SHOWN IN THE "POURING DETAIL" WITH 600mm LONG #13 BARS PLACED ALONG THE SLOPE BETWEEN STRIPS AT 450mm MAXIMUM SPACING. SLOPE PROTECTION MAY BE POURED IN ALTERNATE 1220mm AND 1520mm STRIPS AS SHOWN IN THE "OPTIONAL POURING DETAIL" WITH ADJACENT RUNS OF WELDED WIRE FABRIC LAPPING AT LEAST 152mm. THE COST OF THE WELDED WIRE FABRIC AND #13 BARS, IF USED, SHALL BE INCLUDED IN THE CONTRACT UNIT PRICE BID PER SQUARE METER FOR SLOPE PROTECTION.

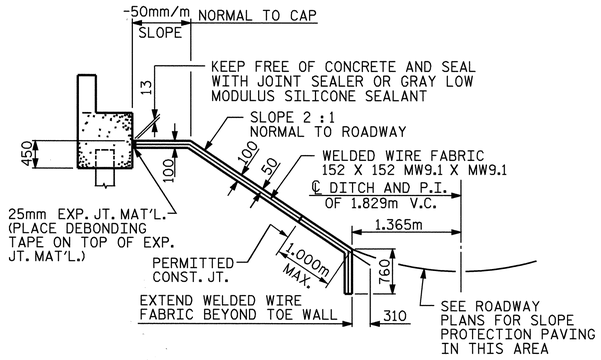

SECTION ALONG ℄ ROADWAY

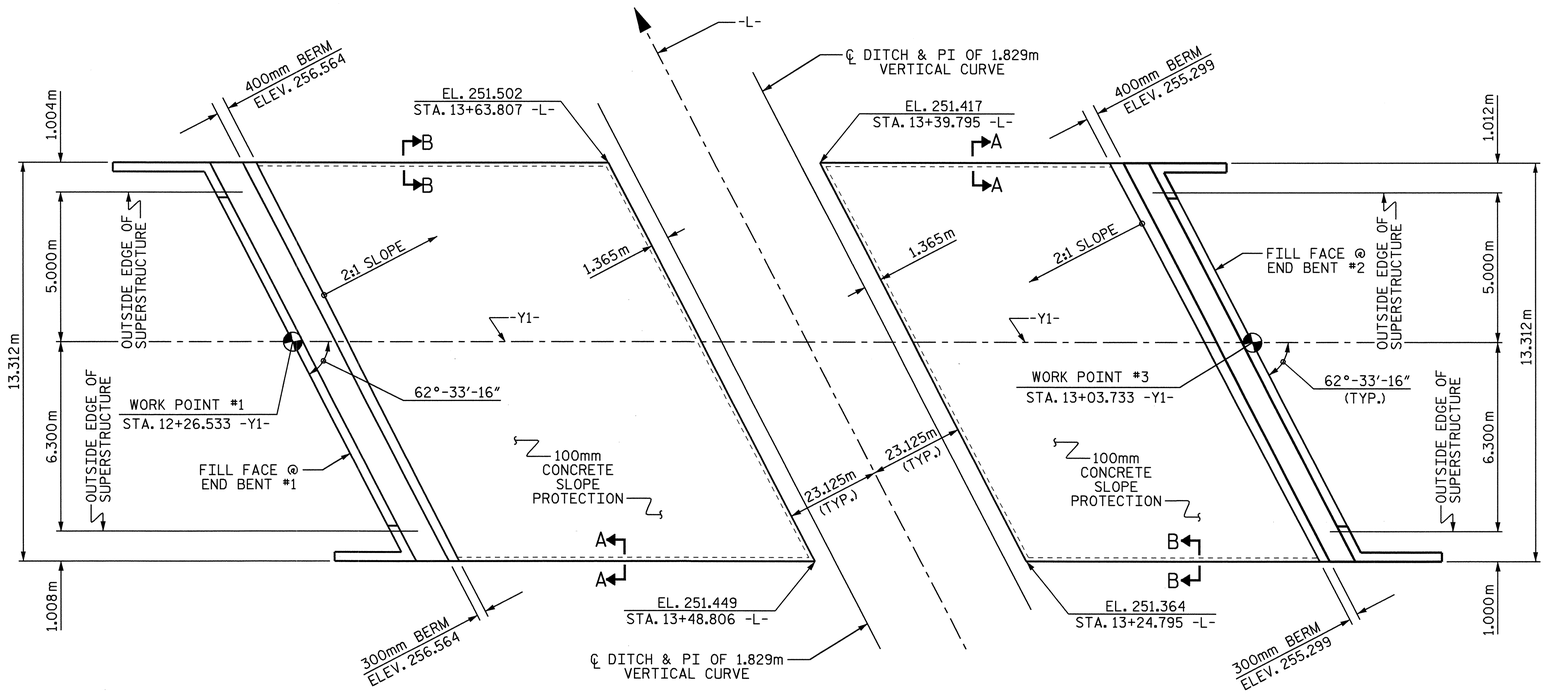

PLAN

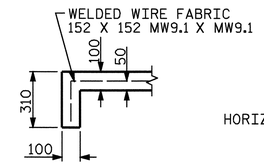

SECTION A-A

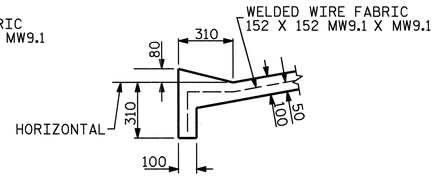

SECTION B-B

STRIP WIDTHS MAY VARY IN CURVED PORTION.

POURING DETAIL

POUR A 1220mm STRIP FIRST. STRIP WIDTHS MAY VARY IN CURVED PORTION.

OPTIONAL POURING DETAIL

BRIDGE @ STA. 12+66.293 -Y1-	100 mm SLOPE PROTECTION (SQUARE METERS)	* WELDED WIRE FABRIC 1520mm WIDE (APPROX. METERS)
@ END BENT 1	203	148
@ END BENT 2	168	123
TOTAL	371	271

* QUANTITY SHOWN IS BASED ON 1520mm POURS.

PROJECT NO. R-0609 IA

GUILFORD COUNTY

STATION: 13+45.031 -L-

STATE OF NORTH CAROLINA
DEPARTMENT OF TRANSPORTATION
RALEIGH

SLOPE PROTECTION DETAILS

NORTH CAROLINA PROFESSIONAL SEAL 23371 ENGINEER VIPUL A. PATEL
11/8/06

REVISIONS						SHEET NO.
NO.	BY:	DATE:	NO.	BY:	DATE:	S-33
1			3			TOTAL SHEETS
2			4			321

DRAWN BY : D.V. JOYNER DATE : 2/05
CHECKED BY : M.K. BEARD DATE : 3/05

08-NOV-2006 07:59
R:\Structures\Final Plans\Str\R0609IA_sd_SP_01.dgn
kbeard

STR.#1

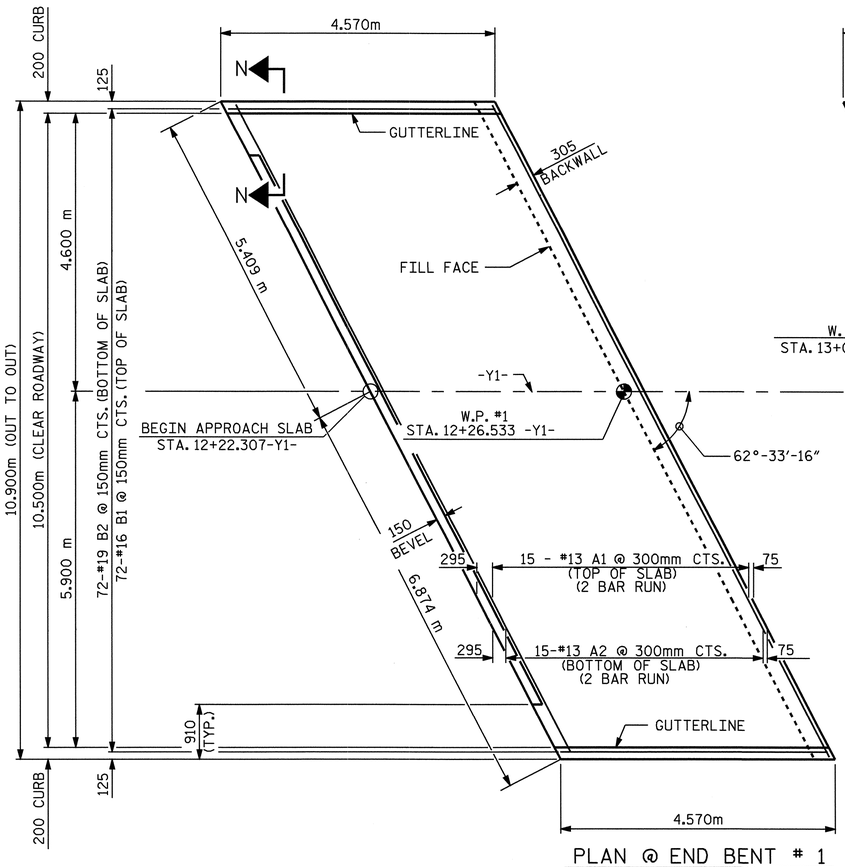

PLAN @ END BENT # 1

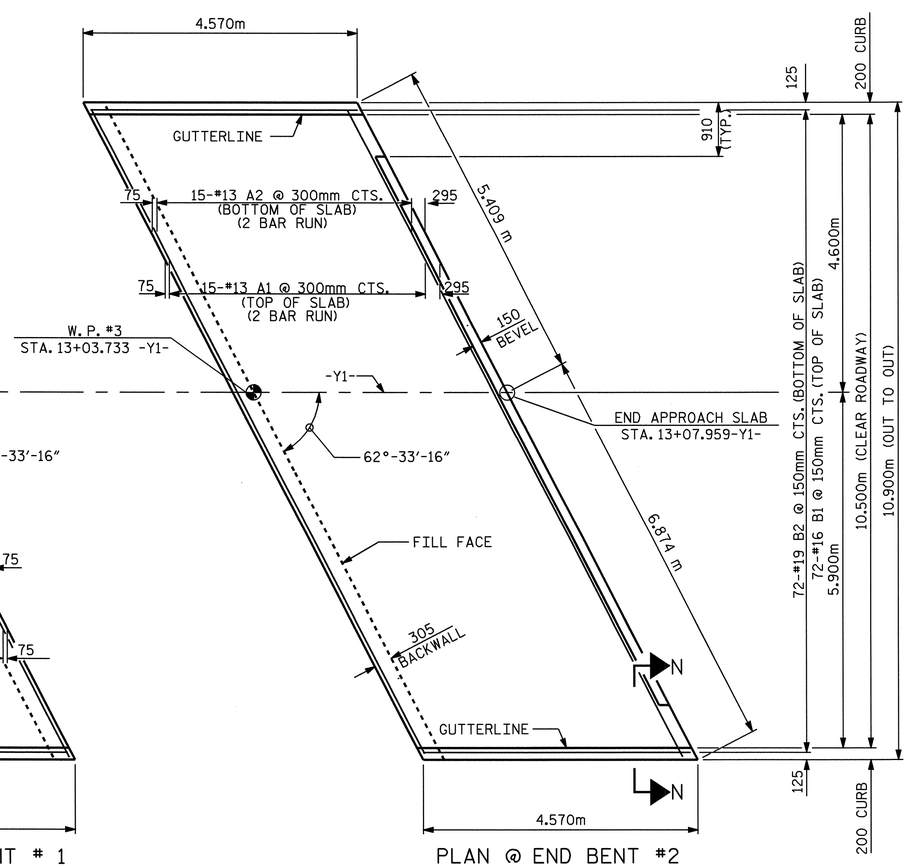

PLAN @ END BENT #2

BILL OF MATERIAL	
END BENT NO.	ELASTOMERIC CONCRETE ✳ (CU. m)
1	0.2
2	0.2

✳BASED ON THE MINIMUM BLOCKOUT SHOWN ON SHEET 2 OF 2.

BILL OF MATERIAL FOR ONE APPROACH SLAB (2 REQ'D)					
BAR	NO.	SIZE	TYPE	LENGTH	WEIGHT
✳ A1	30	13	STR	6400	191
A2	30	13	STR	6360	190
✳ B1	72	16	STR	4320	483
B2	72	19	STR	4460	718
REINFORCING STEEL				kg.	908
✳ EPOXY COATED REINFORCING STEEL				kg.	674
CLASS AA CONCRETE				C.M.	17.4

NOTES

APPROACH SLAB SHALL NOT BE CONSTRUCTED PRIOR TO COMPLETION OF THE BRIDGE DECK.

FOR REINFORCED BRIDGE APPROACH FILL INCLUDING FABRIC, IMPERMEABLE GEOMEMBRANE, 102mm Ø DRAINAGE PIPE, #78M STONE, AND SELECT MATERIAL, SEE ROADWAY PLANS.

TEMPORARY DRAINAGE AND TEMPORARY BERM AND SLOPE DRAINS WILL BE PAID FOR UNDER THE LUMP SUM PRICE FOR BRIDGE APPROACH SLAB.

AREA BETWEEN THE WINGWALL AND APPROACH SLAB SHALL BE GRADED TO DRAIN THE WATER AWAY FROM THE FILL FACE OF THE BRIDGE AND SHALL BE PAVED, SEE ROADWAY PLANS.

THE 150mm COMP. A.B.C. SHALL EXTEND 3m BEYOND THE END OF THE APPROACH SLAB AND 300mm OUTSIDE OF EACH EDGE OF THE SLAB.

THE CONTRACTOR MAY USE 100mm TYPE B-25.0B ASPHALT CONCRETE COURSE IN LIEU OF 150mm COMP. A.B.C. IF THIS OPTION IS USED, THE BASE COURSE SHALL EXTEND 300mm BEYOND THE END OF THE APPROACH SLAB AND THE WIDTH SHALL BE THE SAME AS THAT OF THE APPROACH SLAB.

THE CONTRACTOR MAY USE 125mm CLASS "A" CONCRETE BASE IN LIEU OF 150mm COMP. A.B.C. IF THIS OPTION IS USED, THE CONCRETE BASE SHALL EXTEND 300mm BEYOND THE END OF THE APPROACH SLAB AND THE WIDTH SHALL BE THE SAME AS THAT OF THE APPROACH SLAB. THE CONCRETE SHALL BE FINISHED TO A SMOOTH SURFACE AND A LAYER OF 13.6 kg ROOFING FELT SHALL BE PLACED BETWEEN THE CONCRETE BASE AND THE APPROACH SLAB TO PREVENT BOND. THE APPROACH SLAB SHALL NOT BE CAST UNTIL THE CONCRETE BASE HAS REACHED AN AGE OF THREE CURING DAYS.

THE JOINT SHALL BE SAWED PRIOR TO THE CASTING OF THE PARAPET AND END POST.

FOR ELASTOMERIC CONCRETE, SEE SPECIAL PROVISIONS.

WITH EVAZOTE JOINT SEAL

FOR EVAZOTE JOINT SEALS, SEE SPECIAL PROVISIONS.

THE NOMINAL UNCOMPRESSED SEAL WIDTH OF THE EVAZOTE JOINT SEAL SHALL BE 64mm.

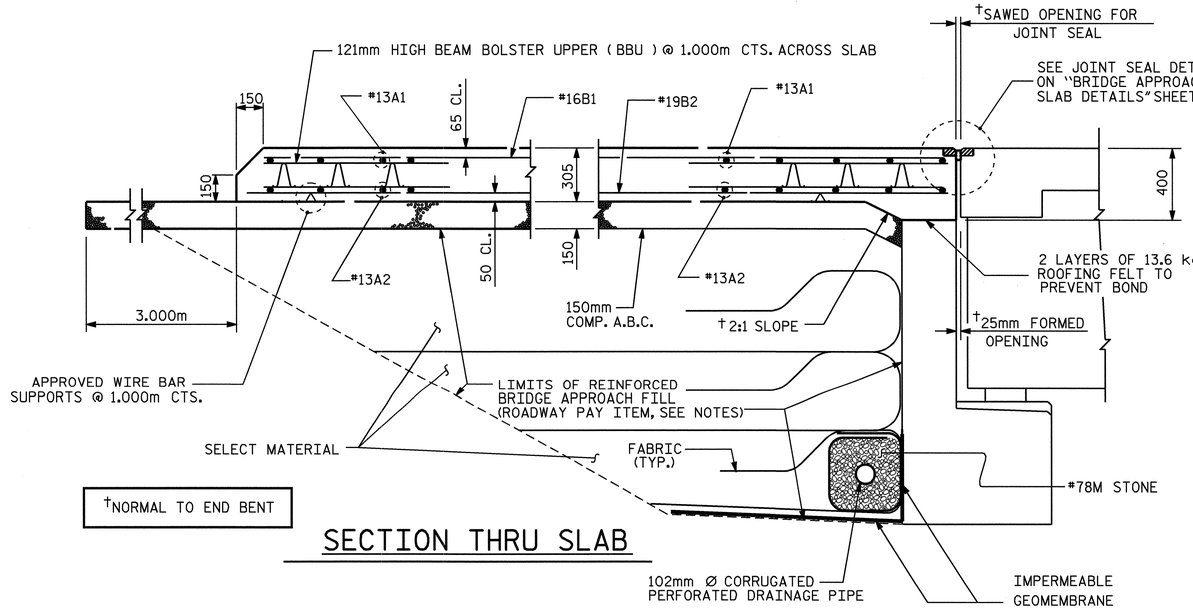

†NORMAL TO END BENT

SECTION THRU SLAB

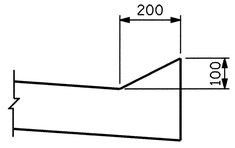

SECTION N-N

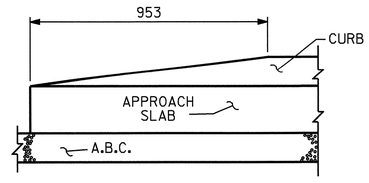

END OF CURB WITHOUT SHOULDER BERM GUTTER

CURB DETAILS

PROJECT NO. R-0609IA

GUILFORD COUNTY

STATION: 13+45.031-L-

SHEET 1 OF 2

STATE OF NORTH CAROLINA
DEPARTMENT OF TRANSPORTATION
RALEIGH

STANDARD

BRIDGE APPROACH SLAB FOR FLEXIBLE PAVEMENT WITH REINFORCED BRIDGE APPROACH FILL

REVISIONS						SHEET NO.
NO.	BY:	DATE:	NO.	BY:	DATE:	S-34
1			3			TOTAL SHEETS
2			4			321

DRAWN BY : G. A. THOMPSON DATE : 7-25-05
CHECKED BY : S. H. SOCKWELL DATE : 9/16/05

22-MAY-2006 09:21
T:\Structures\Final Plans\Str\R0609IA_sd_AS_01.dgn
klayne

STR. 1

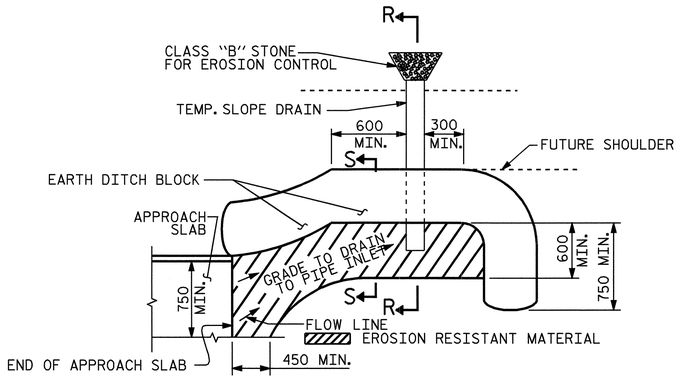

NOTE: IMMEDIATELY AFTER THE CONSTRUCTION OF THE APPROACH SLAB, THE CONTRACTOR SHALL PROVIDE TEMPORARY BERM AND SLOPE DRAIN. CONTRACTOR SHALL GRADE TO PIPE INLET AND PROVIDE EROSION RESISTANT MATERIAL AS SHOWN. THE EROSION RESISTANT MATERIAL SHALL BE EITHER 1) ASPHALT PLANT MIX, TYPE 1 OR TYPE 2, MIN. 50mm DEPTH, 2) EROSION CONTROL MAT, OR 3) CONCRETE, AS DIRECTED BY THE ENGINEER. THE SLOPE DRAIN SHALL CONSIST OF A NON-PERFORATED TEMPORARY DRAINAGE PIPE, 305mm IN DIAMETER.

PLAN VIEW

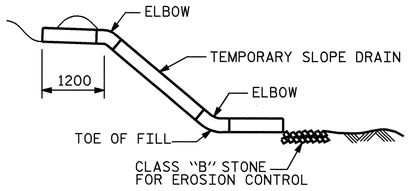

SECTION R-R

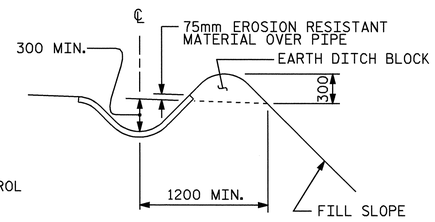

SECTION S-S

TEMPORARY BERM AND SLOPE DRAIN DETAILS

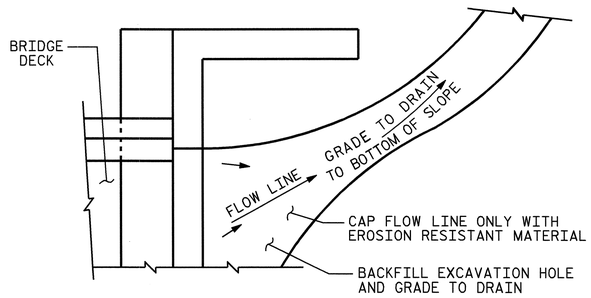

NOTE: IF THE APPROACH SLAB IS NOT CONSTRUCTED IMMEDIATELY AFTER THE BACKFILLING OF THE END BENT EXCAVATION, GRADE TO DRAIN TO THE BOTTOM OF THE SLOPE AND PROVIDE EROSION RESISTANT MATERIAL, SUCH AS FIBERGLASS ROVING OR AS DIRECTED BY THE ENGINEER TO PREVENT SOIL EROSION AND TO PROTECT THE AREA ADJACENT TO THE STRUCTURE. THE CONTRACTOR WILL BE REQUIRED TO REMOVE THESE MATERIALS PRIOR TO CONSTRUCTION OF THE APPROACH SLAB.

TEMPORARY DRAINAGE DETAIL

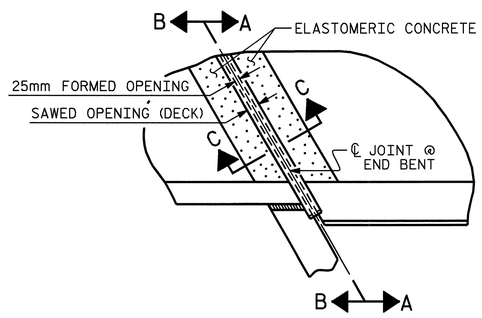

PLAN

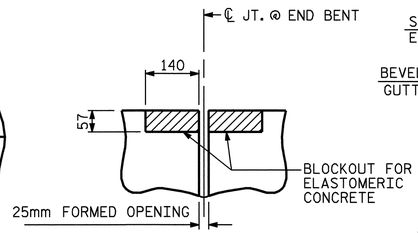

SECTION C-C
EVAZOTE JOINT SEAL
(PRE-SAWED ELASTOMERIC CONCRETE DIMENSIONS)

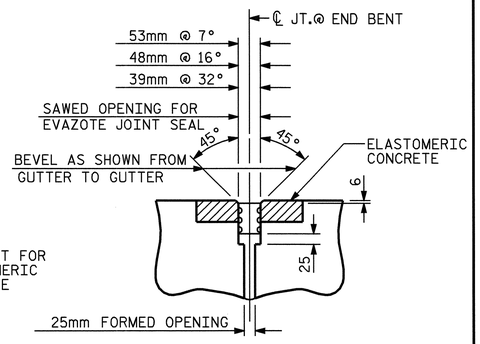

SECTION C-C
EVAZOTE JOINT SEAL

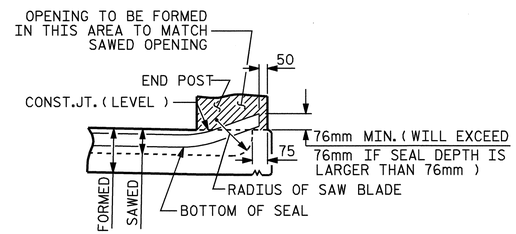

SECTION A-A

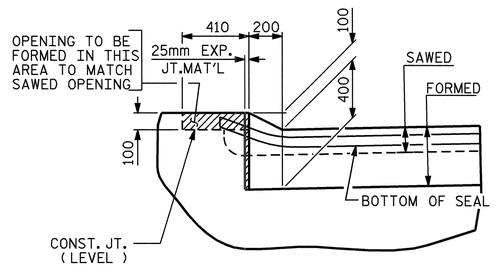

SECTION B-B

JOINT SEAL DETAILS @ END BENT

(FOR METAL RAILS WITH CURB)

PROJECT NO. R-0609IA

GUILFORD COUNTY

STATION: 13+45.031-L-

SHEET 2 OF 2

NORTH CAROLINA PROFESSIONAL SEAL 12653 ENGINEER DARRELL ALLEN THOMPSON

5-25-06

STATE OF NORTH CAROLINA
DEPARTMENT OF TRANSPORTATION
RALEIGH

STANDARD

BRIDGE APPROACH SLAB DETAILS

REVISIONS						SHEET NO.
NO.	BY:	DATE:	NO.	BY:	DATE:	S-35
1			3			TOTAL SHEETS
2			4			321

ASSEMBLED BY : G.A.THOMPSON DATE : 8-19-04	
CHECKED BY : S. H. SOCKWELL DATE : 9/16/05	
DRAWN BY : FCJ 11/88	REV. 8/16/99 RAL/LES
CHECKED BY : ARB 11/88	REV. 10/17/00 RWW/LES
	REV. 5/7/03 RWW/JTE

22-MAY-2006 09:21
T:\Structures\Final Plans\Stri\R0609IA_sd_AS_01.dgn
kjones

STR. 1

STD. NO. BAS10SM

F.A. PROJECT: STP-NHF-119-1(15)

PI = STA. 11+57.230
EL. 238.594
-0.8149%

GRADE DATA -Y2-

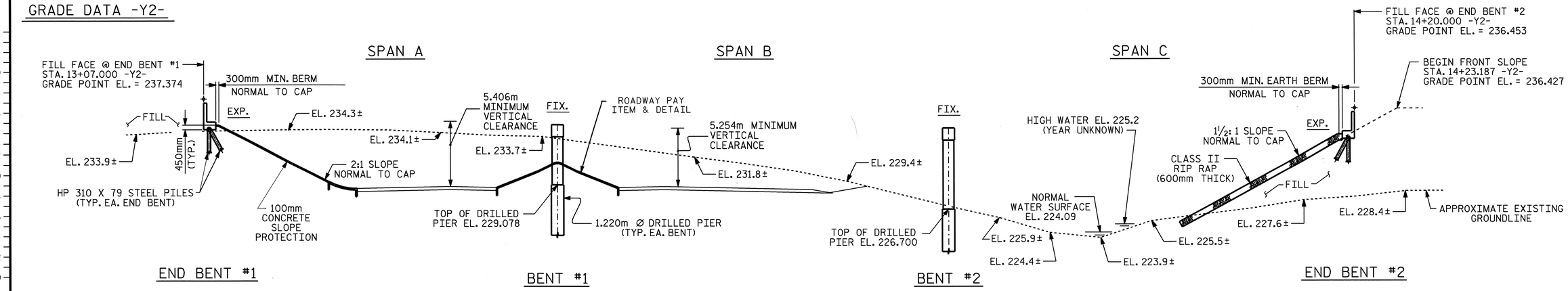

SECTION ALONG -Y2-

(SECTIONS AT BENTS AND END BENTS ARE AT RIGHT ANGLES)

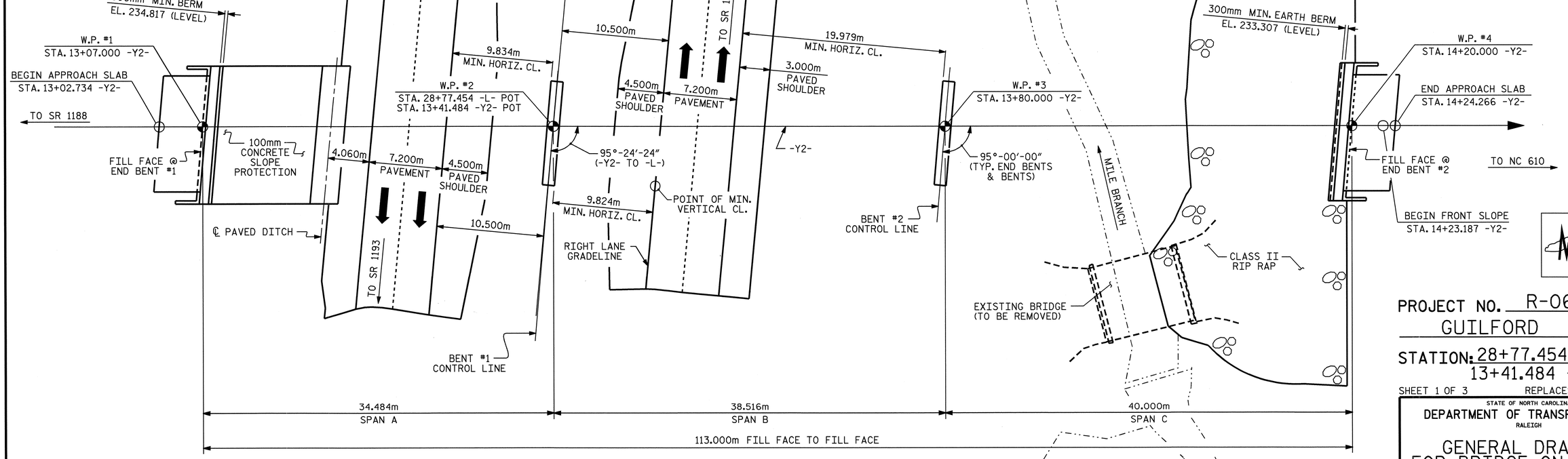

PLAN

(PILES NOT SHOWN IN PLAN VIEW FOR CLARITY)

END BENTS AND BENTS SHALL BE CONSTRUCTED AT A SKEW ANGLE OF 95° 00′ 00″

PI = STA. 25+23.283
EL. 233.167
-1.0027%

GRADE DATA -L-

NORTH CAROLINA PROFESSIONAL SEAL 11915 ENGINEER JOHN C. FRYE
5-22-06

NORTH CAROLINA PROFESSIONAL SEAL 23926 ENGINEER BRIAN C. HANKS
5/22/06

METRIC

PROJECT NO. R-0609IA

GUILFORD COUNTY

STATION: 28+77.454 -L- POT
13+41.484 -Y2- POT

SHEET 1 OF 3 REPLACES BRIDGE NO. 55

STATE OF NORTH CAROLINA
DEPARTMENT OF TRANSPORTATION
RALEIGH

GENERAL DRAWING FOR BRIDGE ON SR 1158 OVER US 311 & MILE BRANCH BETWEEN SR 1188 AND NC 610

REVISIONS						SHEET NO.
NO.	BY:	DATE:	NO.	BY:	DATE:	S-36
1			3			TOTAL SHEETS
2			4			321

DRAWN BY : J.L. WALTON DATE : 3/3/05
CHECKED BY : K.K. PUROHIT DATE : 4/1/05

15-MAY-2006 10:23
J:\STRUCT~1\frye\FINAL_~1\Str2\R-9ED9~1.DGN
rwwright

STR. #2

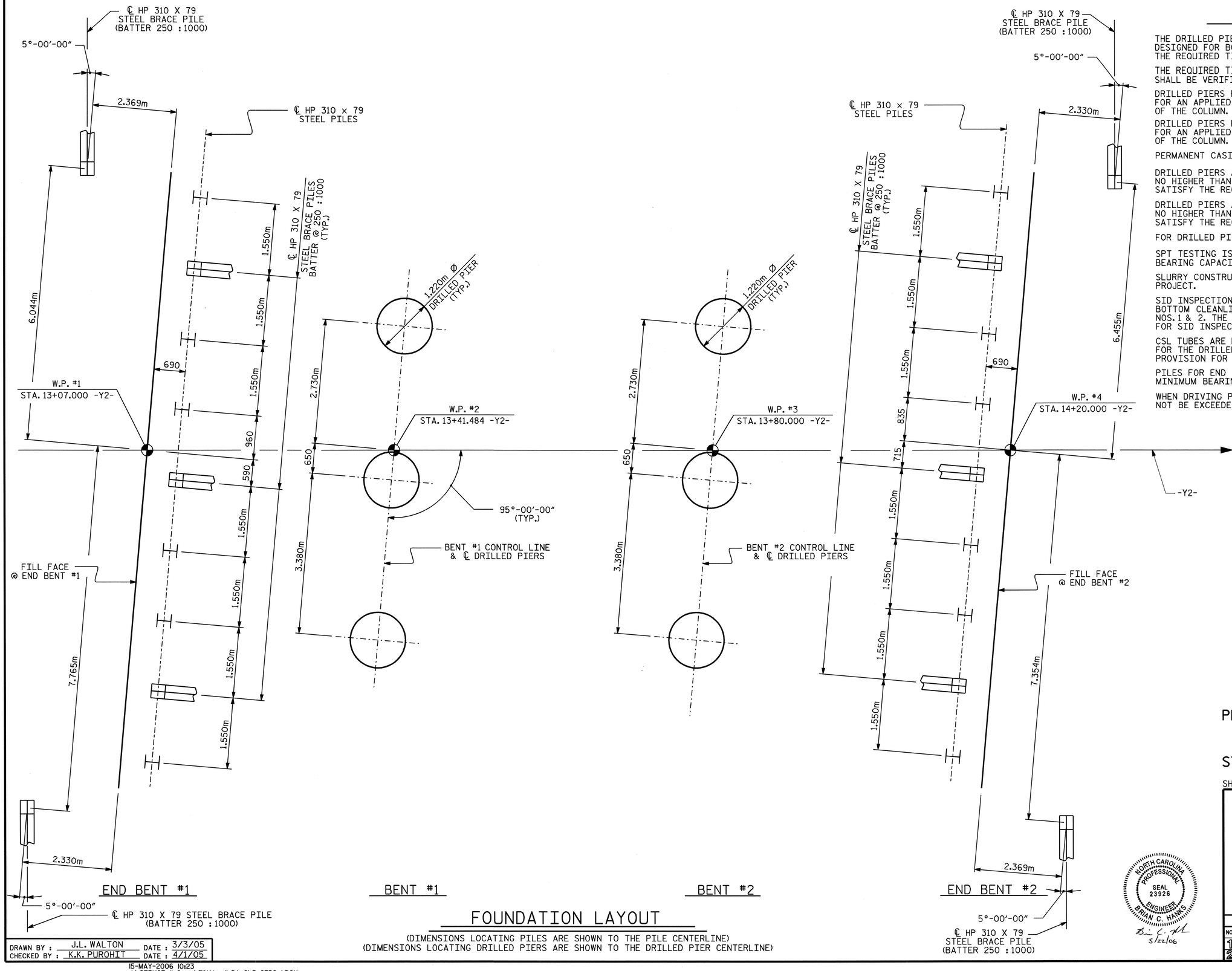

NOTES

THE DRILLED PIERS AT BENT NOS. 1, AND 2 HAVE BEEN DESIGNED FOR BOTH SKIN FRICTION AND TIP BEARING. THE REQUIRED TIP BEARING CAPACITY IS 2400 kPa.

THE REQUIRED TIP BEARING CAPACITY AT BENT NOS. 1 & 2 SHALL BE VERIFIED.

DRILLED PIERS FOR BENT NO. 1 HAVE BEEN DESIGNED FOR AN APPLIED LOAD OF 3430kN EACH AT THE TOP OF THE COLUMN.

DRILLED PIERS FOR BENT NO. 2 HAVE BEEN DESIGNED FOR AN APPLIED LOAD OF 3830kN EACH AT THE TOP OF THE COLUMN.

PERMANENT CASING IS NOT REQUIRED AT BENT NOS. 1 & 2.

DRILLED PIERS AT BENT NO. 1 SHALL EXTEND TO AN ELEVATION NO HIGHER THAN 224.7m (LEFT) AND 224.1m (CENTER & RIGHT), AND SATISFY THE REQUIRED TIP BEARING CAPACITY.

DRILLED PIERS AT BENT NO. 2 SHALL EXTEND TO AN ELEVATION NO HIGHER THAN 223.0m (LEFT) AND 222.5m (CENTER & RIGHT), AND SATISFY THE REQUIRED TIP BEARING CAPACITY.

FOR DRILLED PIERS, SEE SPECIAL PROVISIONS.

SPT TESTING IS NOT REQUIRED TO DETERMINE THE TIP BEARING CAPACITY OF THE DRILLED PIERS AT BENT NOS. 1 & 2.

SLURRY CONSTRUCTION SHALL NOT BE USED FOR THIS PROJECT.

SID INSPECTIONS MAY BE REQUIRED TO INSPECT THE BOTTOM CLEANLINESS OF THE DRILLED PIERS AT BENT NOS. 1 & 2. THE ENGINEER WILL DETERMINE THE NEED FOR SID INSPECTION. SEE DRILLED PIER SPECIAL PROVISION.

CSL TUBES ARE REQUIRED AND CSL TESTING MAY BE REQUIRED FOR THE DRILLED PIERS AT BENT NOS. 1 & 2. SEE SPECIAL PROVISION FOR CROSSHOLE SONIC LOGGING.

PILES FOR END BENT NOS. 1 & 2 SHALL BE DRIVEN TO A MINIMUM BEARING CAPACITY OF 530 kN EACH.

WHEN DRIVING PILES, THE MAXIMUM BLOW COUNT SHALL NOT BE EXCEEDED.

FOUNDATION LAYOUT

(DIMENSIONS LOCATING PILES ARE SHOWN TO THE PILE CENTERLINE)
(DIMENSIONS LOCATING DRILLED PIERS ARE SHOWN TO THE DRILLED PIER CENTERLINE)

DRAWN BY : J.L. WALTON DATE : 3/3/05
CHECKED BY : K.K. PUROHIT DATE : 4/1/05

15-MAY-2006 10:23
J:\STRUCT~1\frye\FINAL_~1\Str2\R-9ED9~1.DGN
rwwright

PROJECT NO. R-0609IA
GUILFORD COUNTY
STATION: 28+77.454 -L- POT
13+41.484 -Y2- POT
SHEET 2 OF 3

STATE OF NORTH CAROLINA
DEPARTMENT OF TRANSPORTATION
RALEIGH

GENERAL DRAWING FOR BRIDGE ON SR 1158 OVER US 311 & MILE BRANCH BETWEEN SR 1188 AND NC 610

REVISIONS						SHEET NO.
NO.	BY:	DATE:	NO.	BY:	DATE:	S-37
1			3			TOTAL SHEETS
2			4			321

NORTH CAROLINA PROFESSIONAL SEAL 23926 ENGINEER BRIAN C. HANKS
5/22/06

STR #2

TOTAL BILL OF MATERIAL

	REMOVAL OF EXISTING STRUCTURE	1220mm Ø DRILLED PIERS IN SOIL	1220mm Ø DRILLED PIERS NOT IN SOIL	SID INSPECTION	CROSSHOLE SONIC LOGGING	REINFORCED CONCRETE DECK SLAB	GROOVING BRIDGE FLOORS	CLASS A CONCRETE	BRIDGE APPROACH SLABS	REINFORCING STEEL	SPIRAL COLUMN REINFORCING STEEL	STRUCTURAL STEEL	HP 310 X 79 STEEL PILES		TWO BAR METAL RAIL	355mm x 915mm CONCRETE PARAPET	100mm SLOPE PROTECTION	PLAIN RIP RAP CLASS II (600mm THICK)	FILTER FABRIC FOR DRAINAGE	POT BEARINGS	ELASTOMERIC BEARINGS	EVAZOTE JOINT SEALS
	LUMP SUM	METERS	METERS	EA.	EA.	SQ. METERS	SQ. METERS	CU. METERS	LUMP SUM	kg	kg	APPROX. kg	NO.	METERS	METERS	METERS	SQ. METERS	METRIC TONS	SQ. METERS	LUMP SUM	LUMP SUM	LUMP SUM
SUPERSTRUCTURE						1269.5	1160.6		LUMP SUM			220,000			219.992	224.616				LUMP SUM	LUMP SUM	LUMP SUM
END BENT 1								27.2		2307			11	44.0			160					
BENT 1		8.3	6.0	3				28.1		6079	1111											
BENT 2		6.1	6.0	3	1			33.6		6521	1260											
END BENT 2								27.2		2307			11	88.0				1530	1500			
TOTAL	LUMP SUM	14.4	12.0	6	1	1269.5	1160.6	116.1	LUMP SUM	17214	2371	220,000	22	132.0	219.992	224.616	160	1530	1500	LUMP SUM	LUMP SUM	LUMP SUM

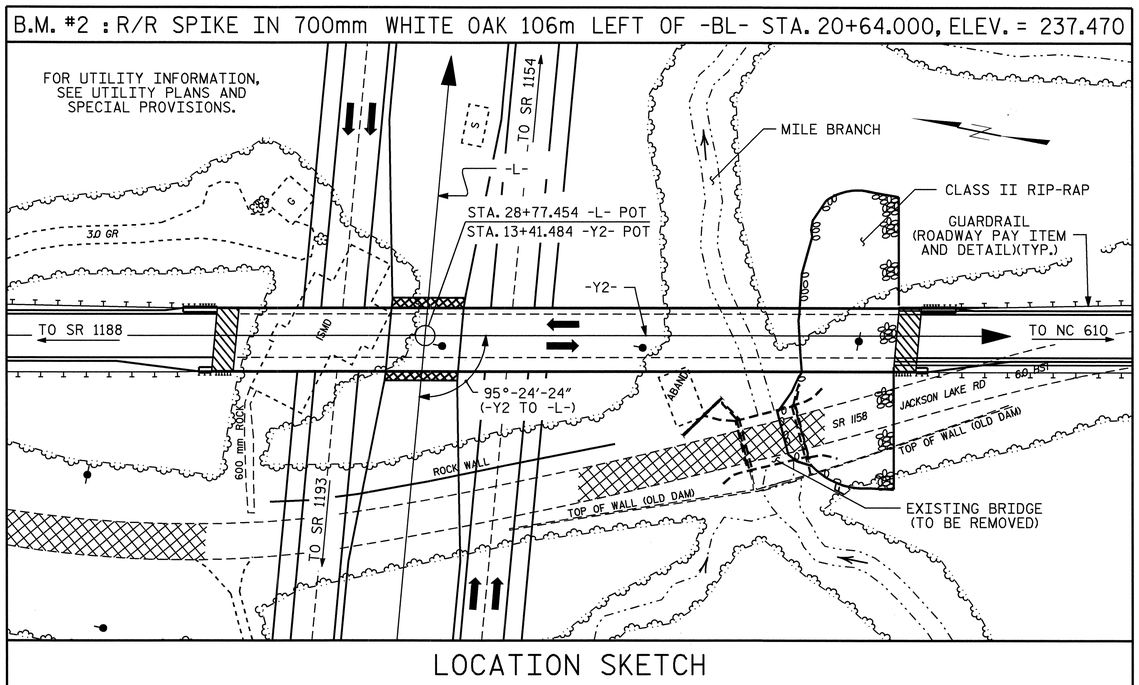

HYDRAULIC DATA

DESIGN DISCHARGE = 33 m^3/s
FREQUENCY OF DESIGN FLOOD = 50 YRS.
DESIGN HIGH WATER ELEVATION = 225.960
DRAINAGE AREA = 4.12 Sq. Km
BASIC DISCHARGE (Q100) = 44 m^3/s
BASIC HIGH WATER ELEVATION = 226.170

OVERTOPPING FLOOD DATA

OVERTOPPING DISCHARGE = 410 m^3/s
FREQUENCY OF OVERTOPPING FLOOD = 500+ YRS.
OVERTOPPING FLOOD ELEVATION = 229.290

OVERTOPPING FLOOD DATA IS FOR THE -L- LINE

NOTES

ALL DIMENSIONS ARE IN MILLIMETERS UNLESS OTHERWISE NOTED.

ALL ELEVATIONS ARE IN METERS.

ASSUMED LIVE LOAD = MS 18 OR ALTERNATE LOADING.

FOR OTHER DESIGN DATA AND GENERAL NOTES, SEE SHEET SNSM.

FOR EROSION CONTROL MEASURES SEE EROSION CONTROL PLANS.

THIS BRIDGE HAS BEEN DESIGNED BY THE STRENGTH DESIGN METHOD AS SPECIFIED IN AASHTO STANDARD SPECIFICATIONS.

THIS STRUCTURE HAS BEEN DESIGNED IN ACCORDANCE WITH HEC 18,"EVALUATING SCOUR AT BRIDGES", NOVEMBER, 1995.

THIS BRIDGE HAS BEEN DESIGNED IN ACCORDANCE WITH THE REQUIREMENTS OF THE AASHTO STANDARD SPECIFICATIONS FOR SEISMIC DESIGN OF HIGHWAY BRIDGES FOR SEISMIC PERFORMANCE CATEGORY A.

THE CONTRACTOR SHALL PROVIDE INDEPENDENT ASSURANCE SAMPLES OF REINFORCING STEEL AS FOLLOWS: FOR PROJECTS REQUIRING UP TO 360,000 kg OF REINFORCING STEEL, ONE 760mm SAMPLE OF EACH SIZE BAR USED, AND FOR PROJECTS REQUIRING OVER 360,000 kg OF REINFORCING STEEL, TWO 760mm SAMPLES OF EACH SIZE BAR USED. THE BARS FROM WHICH THE SAMPLES ARE TAKEN MUST THEN BE SPLICED WITH REPLACEMENT BARS OF THE SIZE AND LENGTH OF THE SAMPLE PLUS A MINIMUM LAP SPLICE OF THIRTY BAR DIAMETERS.

FOR SUBMITTAL OF WORKING DRAWINGS, SEE SPECIAL PROVISIONS.

ALL STRUCTURAL STEEL SHALL BE AASHTO M270 GRADE 345W AND PAINTED IN ACCORDANCE WITH SYSTEM 4 OF ARTICLE 442-7 OF THE STANDARD SPECIFICATIONS UNLESS OTHERWISE NOTED ON THE PLANS.

REMOVABLE FORMS MAY BE USED IN LIEU OF METAL STAY-IN-PLACE FORMS IN ACCORDANCE WITH ARTICLE 420-3 OF THE STANDARD SPECIFICATIONS.

THE LOCATION OF THE CONSTRUCTION JOINT IN THE DRILLED PIERS AT BENT 2 IS BASED ON AN APPROXIMATE GROUND LINE ELEVATION. IF THE CONSTRUCTION JOINT IS ABOVE THE ACTUAL GROUND ELEVATION, THE CONTRACTOR SHALL PLACE THE CONSTRUCTION JOINT 300mm BELOW THE GROUND LINE.

THE CLASS AA CONCRETE IN THE BRIDGE DECK SHALL CONTAIN FLY ASH OR GROUND GRANULATED BLAST FURNACE SLAG AT THE SUBSTITUTION RATE SPECIFIED IN ARTICLE 1024-1 AND IN ACCORDANCE WITH ARTICLES 1024-5 AND 1024-6 OF THE STANDARD SPECIFICATIONS. NO PAYMENT WILL BE MADE FOR THIS SUBSTITUTION AS IT IS CONSIDERED INCIDENTAL TO THE COST OF THE REINFORCED CONCRETE DECK SLAB.

NEEDLE BEAMS WILL NOT BE ALLOWED UNLESS OTHERWISE CALLED FOR ON THE PLANS OR APPROVED BY THE ENGINEER.

FOR STEEL H PILES, SEE SPECIAL PROVISIONS.

THE EXISTING STRUCTURE LOCATED UPSTREAM CONSISTING OF 1 SPAN @ 10.400m WITH STEEL PLANK DECK ON I-BEAMS WITH ABUTMENTS SHALL BE REMOVED.

REMOVAL OF THE EXISTING BRIDGE SHALL BE PERFORMED SO AS NOT TO ALLOW DEBRIS TO FALL INTO THE WATER. THE CONTRACTOR SHALL REMOVE THE BRIDGE AND SUBMIT PLANS FOR DEMOLITION IN ACCORDANCE WITH ARTICLE 402-2 OF THE STANDARD SPECIFICATIONS.

THE SUBSTRUCTURE OF THE EXISTING BRIDGE INDICATED ON THE PLANS IS FROM THE BEST INFORMATION AVAILABLE. SINCE THIS INFORMATION IS SHOWN FOR THE CONVENIENCE OF THE CONTRACTOR, THE CONTRACTOR SHALL HAVE NO CLAIM WHATSOEVER AGAINST THE DEPARTMENT OF TRANSPORTATION FOR ANY DELAYS OR ADDITIONAL COST INCURRED BASED ON DIFFERENCES BETWEEN THE EXISTING BRIDGE SUBSTRUCTURE SHOWN ON THE PLANS AND THE ACTUAL CONDITIONS AT THE PROJECT SITE.

INASMUCH AS THE PAINT SYSTEM ON THE EXISTING STRUCTURAL STEEL CONTAINS LEAD, THE CONTRACTOR'S ATTENTION IS DIRECTED TO ARTICLE 107-1 OF THE STANDARD SPECIFICATIONS. ANY COSTS RESULTING FROM COMPLIANCE WITH APPLICABLE STATE OR FEDERAL REGULATIONS PERTAINING TO HANDLING OF MATERIALS CONTAINING LEAD BASED PAINT SHALL BE INCLUDED IN THE BID PRICE FOR "REMOVAL OF EXISTING STRUCTURE AT STATION 28+77.454 -L-."

FOR CRANE SAFETY, SEE SPECIAL PROVISIONS.

FOR METRIC STRUCTURAL STEEL, SEE SPECIAL PROVISIONS.

FOR FALSEWORK AND FORMWORK, SEE SPECIAL PROVISIONS.

WORK SHALL NOT BE STARTED ON BENT 1 UNTIL ROADWAY SECTION HAS BEEN EXCAVATED.

NORTH CAROLINA PROFESSIONAL SEAL 23926 ENGINEER BRIAN C. HAWKS
5/22/06

PROJECT NO. R-0609IA
GUILFORD COUNTY
STATION: 28+77.454 -L- POT
13+41.484 -Y2- POT
SHEET 3 OF 3

STATE OF NORTH CAROLINA
DEPARTMENT OF TRANSPORTATION
RALEIGH

GENERAL DRAWING FOR BRIDGE ON SR 1158 OVER US 311 & MILE BRANCH BETWEEN SR 1188 AND NC 610

REVISIONS						SHEET NO.
NO.	BY:	DATE:	NO.	BY:	DATE:	S-38
1			3			TOTAL SHEETS
2			4			321

DRAWN BY : J.L. WALTON DATE : 3/3/05
CHECKED BY : K.K. PUROHIT DATE : 4/1/05

15-MAY-2006 10:23
J:\STRUCT~1\frye\FINAL_~1\Str2\R-9ED9~1.DGN
rwwright

STR. #2

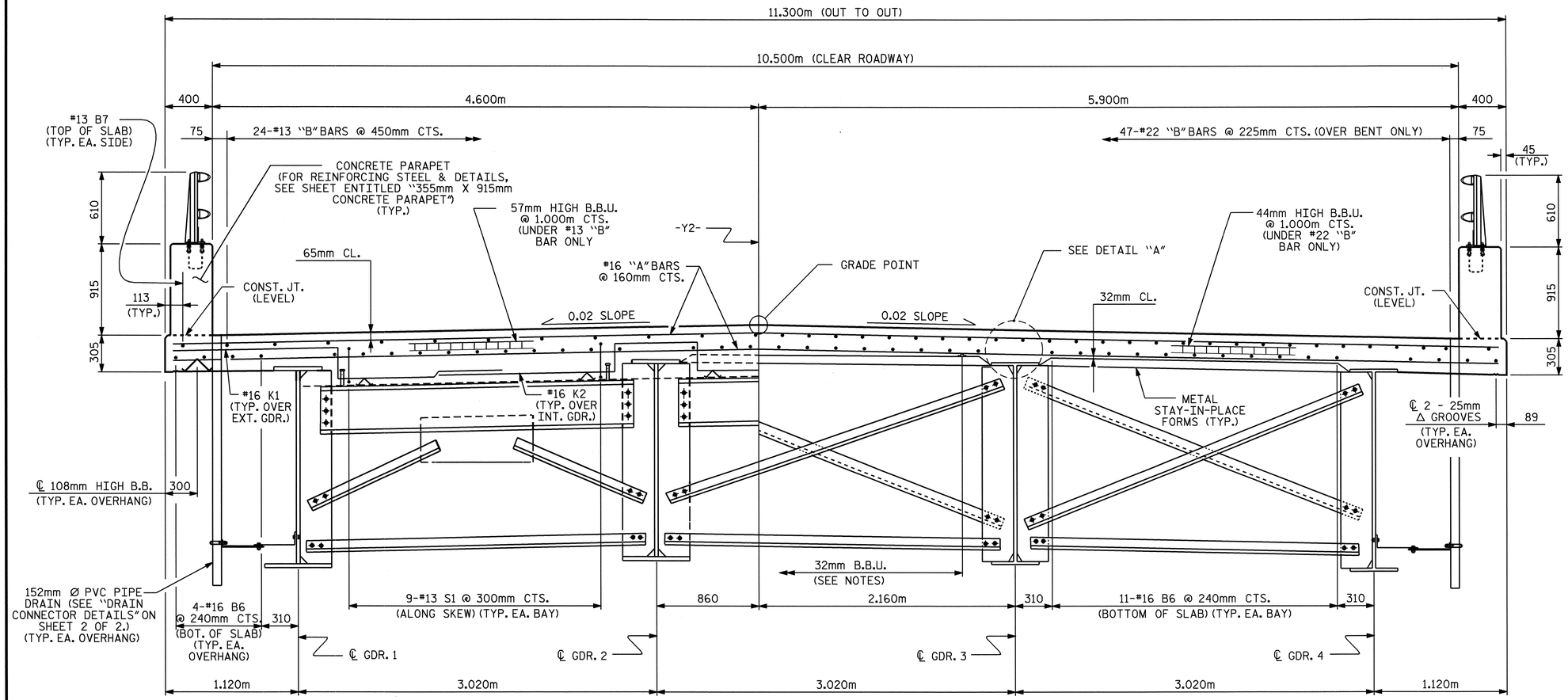

HALF TYPICAL SECTION

SHOWING END BENT DIAPHRAGMS

HALF TYPICAL SECTION

SHOWING BENT & INTERMEDIATE DIAPHRAGMS

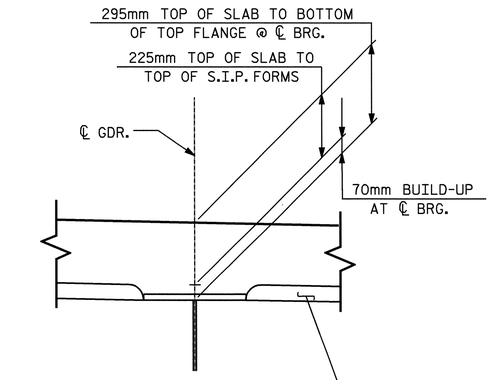

DETAIL "A"

NOTES

PROVIDE 32mm HIGH BEAM BOLSTERS UPPER AT 1.200m CTS. ATOP THE METAL STAY-IN-PLACE FORMS TO SUPPORT THE BOTTOM MAT OF 'A' BARS. WHEN USING REMOVABLE FORMS, PROVIDE CONTINUOUS HIGH CHAIRS FOR METAL DECK (C.H.C.M.) @ 1.200m CTS. WITH A HEIGHT TO SUPPORT THE BOTTOM MAT OF 'A' BARS A CLEAR DISTANCE OF 65mm ABOVE THE TOP OF THE REMOVABLE FORM.

THE CONTRACTOR MAY, WHEN NECESSARY, PROPOSE A SCHEME FOR AVOIDING INTERFERENCE BETWEEN METAL STAY-IN-PLACE FORM SUPPORTS OR FORMS AND BEAM/GIRDER STIFFENERS OR CONNECTOR PLATES. THE PROPOSAL SHALL BE INDICATED, AS APPROPRIATE, ON EITHER THE STEEL WORKING DRAWINGS OR THE METAL STAY-IN-PLACE FORM WORKING DRAWINGS.

METAL STAY-IN-PLACE FORMS SHALL NOT BE WELDED TO BEAM OR GIRDER FLANGES IN THE ZONES REQUIRING CHARPY V-NOTCH TEST. SEE STRUCTURAL STEEL DETAIL SHEETS.

PREVIOUSLY CAST CONCRETE IN A CONTINUOUS UNIT SHALL HAVE ATTAINED A MINIMUM COMPRESSIVE STRENGTH OF 20.7 MPa BEFORE ADDITIONAL CONCRETE IS CAST IN THE UNIT.

STRUCTURAL STEEL ERECTION IN A CONTINUOUS UNIT SHALL BE COMPLETE BEFORE FALSEWORK OR FORMS ARE PLACED ON THE UNIT.

THE CONTRACTOR SHALL ADJUST THE GIRDER BUILDUPS AS NECESSARY TO INCORPORATE A MAXIMUM PERMISSIBLE VARIATION IN POT BEARING DEPTH OF 13mm, SEE SPECIAL PROVISION FOR POT BEARINGS.

PARAPET IN A CONTINUOUS UNIT SHALL NOT BE CAST UNTIL ALL SLAB CONCRETE IN THE UNIT HAS BEEN CAST AND HAS REACHED A MINIMUM COMPRESSIVE STRENGTH OF 20.7 MPa.

PROJECT NO. R-0609IA

GUILFORD COUNTY

STATION: 28+77.454 -L-

SHEET 1 OF 2

STATE OF NORTH CAROLINA
DEPARTMENT OF TRANSPORTATION
RALEIGH

SUPERSTRUCTURE

TYPICAL SECTION

NORTH CAROLINA PROFESSIONAL SEAL 23926 ENGINEER BRIAN C. HANKS
5/22/06

REVISIONS						SHEET NO.
NO.	BY:	DATE:	NO.	BY:	DATE:	S-39
1			3			TOTAL SHEETS
2			4			321

DRAWN BY : D. G. ELY DATE : 11/29/04
CHECKED BY : R. W. WRIGHT DATE : 2/05

15-MAY-2006 10:24
J:\STRUCT~1\frye\FINAL_~1\Str2\R-0609IA_sd_TS_02.dgn
rwwright

STR. #2

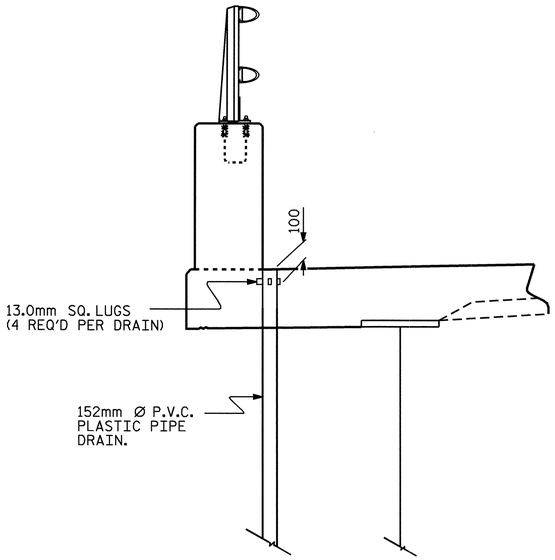

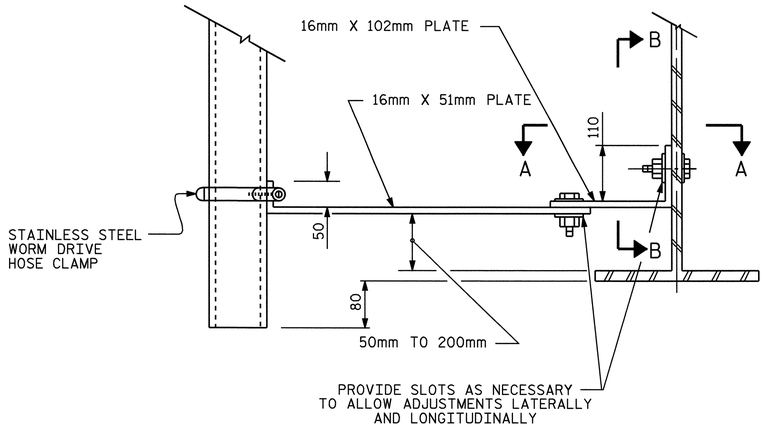

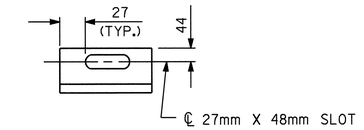

SECTION B-B

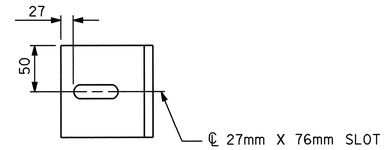

SECTION A-A

NOTES:

BOLT SIZE FOR PIPE DRAIN BRACKETS TO BE SAME AS DIAPHRAGMS AND CROSSFRAME CONNECTIONS. STAINLESS STEEL WORM DRIVE HOSE CLAMP SHALL BE COMMERCIAL QUALITY.

PLATES FOR PIPE DRAIN BRACKETS SHALL CONFORM TO AASHTO M270 GRADE 250 STEEL OR APPROVED EQUAL.

PVC DECK DRAINS SHALL BE PAINTED WITH TWO COATS OF BROWN PRIMER MEETING THE REQUIREMENTS OF ARTICLE 1080-12 OF THE STANDARD SPECIFICATIONS. EACH COAT SHALL BE 0.050mm THICK. DECK DRAINS SHALL BE ROUGHENED PRIOR TO PAINTING. NO SEPARATE PAYMENT SHALL BE MADE FOR PAINTING PVC DECK DRAINS AS THIS IS CONSIDERED INCIDENTAL TO THE PAY ITEM FOR REINFORCED CONCRETE DECK SLAB.

TOP OF FLOOR DRAIN TO BE SET 10mm BELOW SURFACE OF SLAB.

4 - 13mm SQUARE LUGS TO BE GLUED TO THE PVC PLASTIC PIPE AT EQUAL SPACES AROUND THE PIPE DRAIN APPROXIMATELY 100mm FROM THE TOP OF THE PIPE.

COUPLING IN DRAIN PIPE WILL BE PERMITTED AS APPROVED BY THE ENGINEER.

THE 152mm DIA. PVC PIPE AND FITTINGS SHALL BE SCHEDULE 40 AND CONFORM TO ASTM D1785.

DRAIN CONNECTOR DETAILS

(23 ASSEMBLIES REQUIRED)

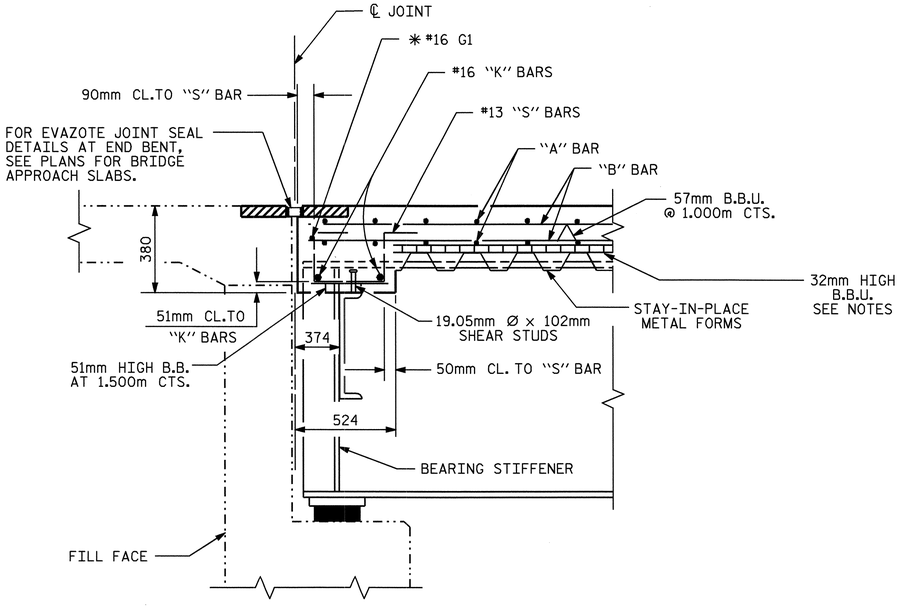

SECTION @ END BENTS

* #16 G1 BAR MAY BE SHIFTED SLIGHTLY, AS NECESSARY, TO CLEAR DIAPHRAGM AND REINFORCING STEEL.

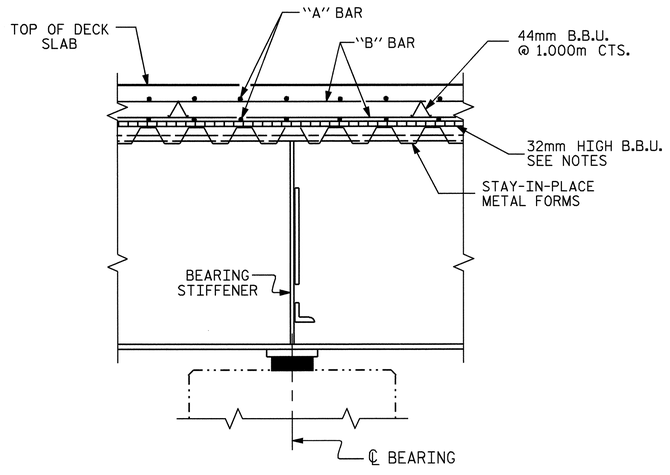

SECTION AT BENT

PROJECT NO. R-0609IA

GUILFORD COUNTY

STATION: 28+77.454 -L-

SHEET 2 OF 2

STATE OF NORTH CAROLINA
DEPARTMENT OF TRANSPORTATION
RALEIGH

SUPERSTRUCTURE

TYPICAL SECTION

REVISIONS						SHEET NO.
NO.	BY:	DATE:	NO.	BY:	DATE:	S-40
1			3			TOTAL SHEETS
2			4			321

STR. #2

NORTH CAROLINA PROFESSIONAL SEAL 23926 ENGINEER BRIAN C. HANKS
5/22/06

DRAWN BY : D. G. ELY DATE : 5/16/05
CHECKED BY : R. W. WRIGHT DATE : 2/05

15-MAY-2006 10:24
J:\STRUCT~1\frye\FINAL_~1\Str2\R-0609IA_sd_TS_02.dgn
rwwright

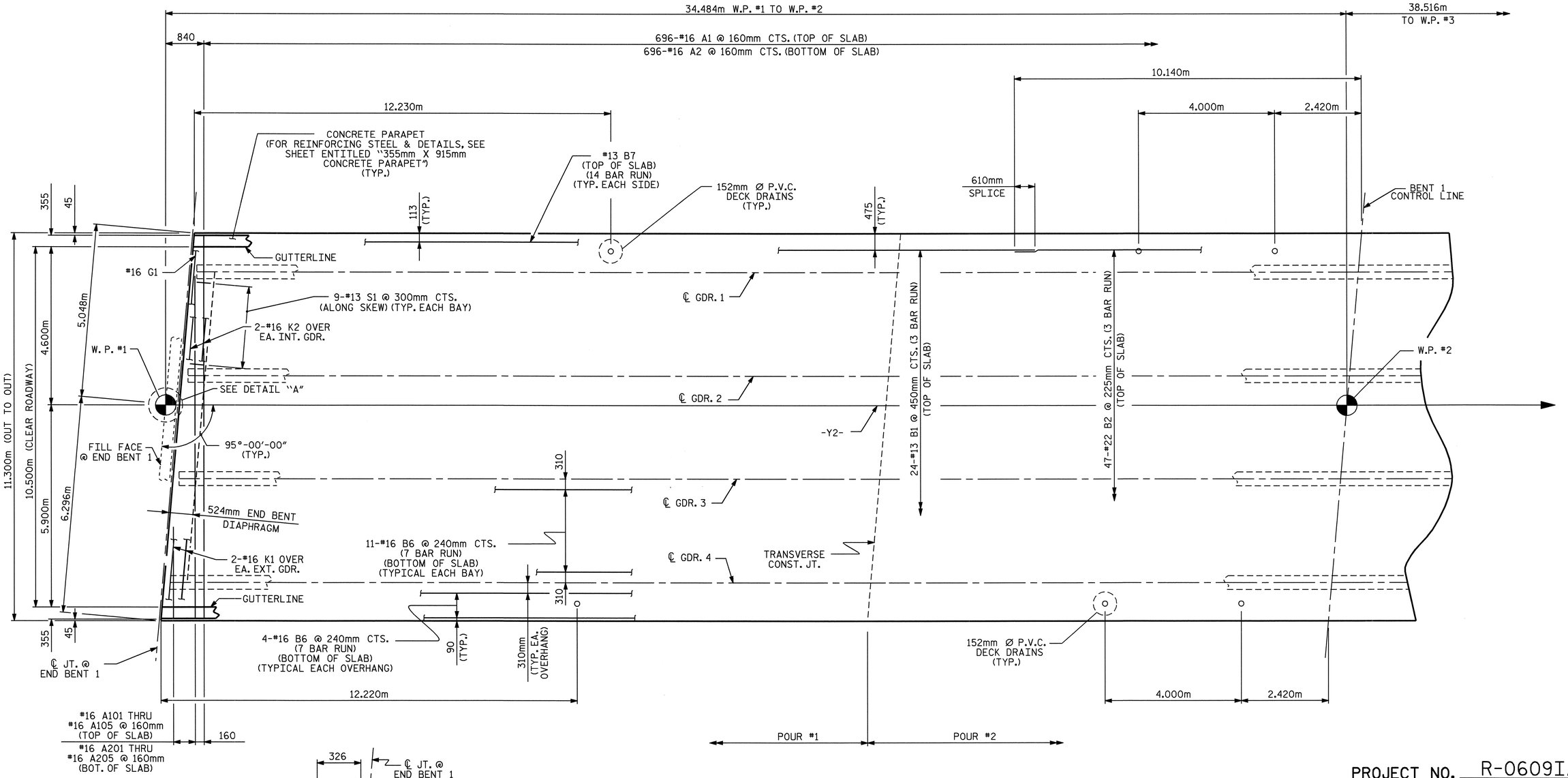

PLAN OF SPAN A

FOR TRANSVERSE CONSTRUCTION JOINT DETAILS AND LOCATION, SEE "SUPERSTRUCTURE - BILL OF MATERIAL" SHEET.

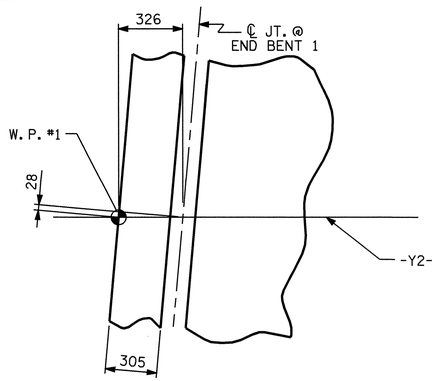

DETAIL "A"

PROJECT NO. R-0609IA

GUILFORD COUNTY

STATION: 28+77.454 -L-

SHEET 1 OF 3

STATE OF NORTH CAROLINA
DEPARTMENT OF TRANSPORTATION
RALEIGH

SUPERSTRUCTURE
PLAN OF SPANS
(SPAN A)

REVISIONS						SHEET NO.
NO.	BY:	DATE:	NO.	BY:	DATE:	S-41
1			3			TOTAL SHEETS
2			4			321

NORTH CAROLINA PROFESSIONAL SEAL 23926 ENGINEER BRIAN C. HANKS
5/22/06

DRAWN BY : D. G. ELY DATE : 11/22/04
CHECKED BY : R. W. WRIGHT DATE : 2/05

15-MAY-2006 10:25
J:\STRUCT~1\frye\FINAL_~1\Str2\R-0609IA_sd_PS_02.dgn
rwwright

STR. #2

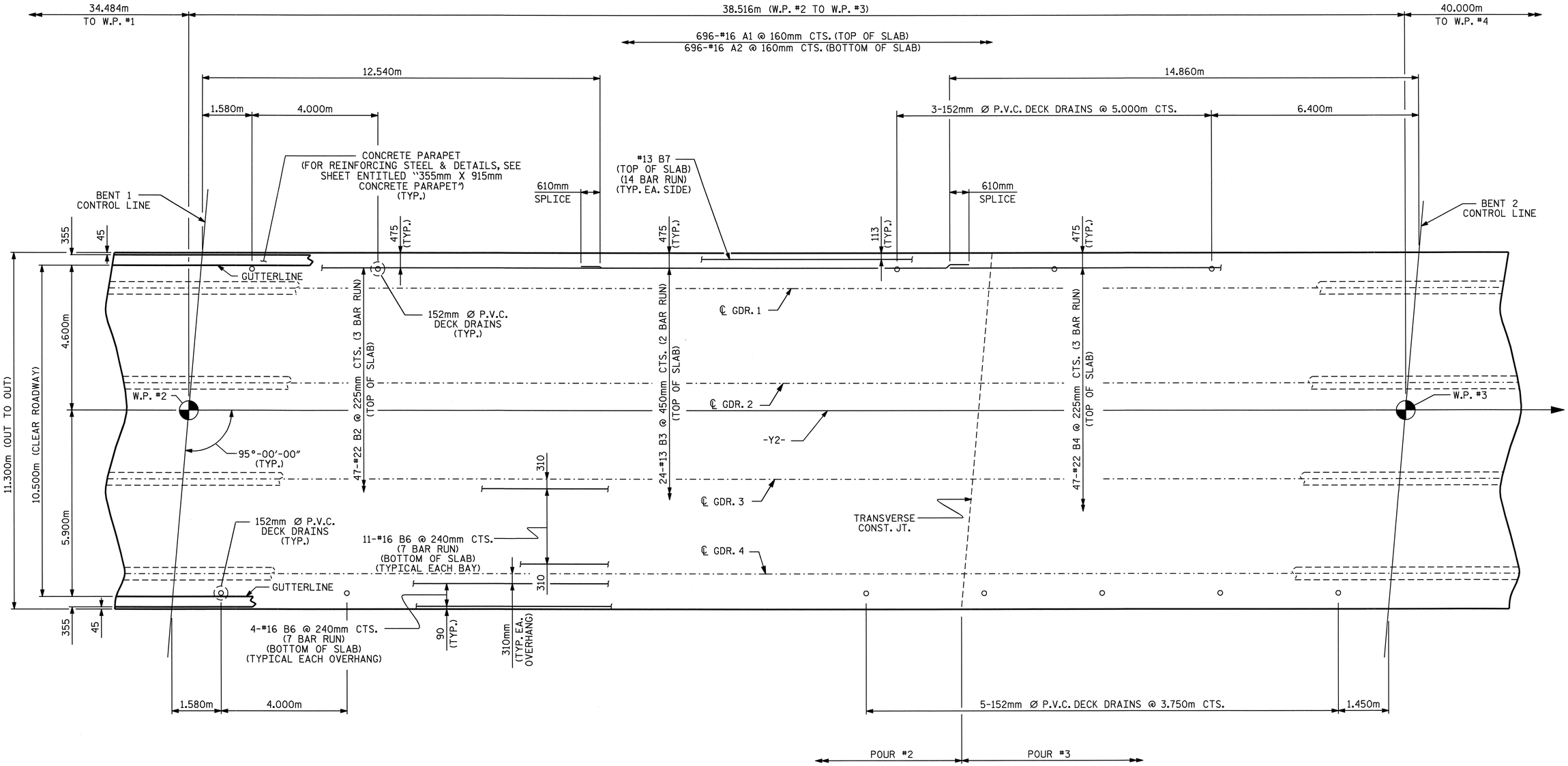

PLAN OF SPAN B

FOR TRANSVERSE CONSTRUCTION JOINT DETAILS AND LOCATION, SEE "SUPERSTRUCTURE - BILL OF MATERIAL" SHEET.

FOR A1 AND A2 BAR DETAILS, SEE SHEET 1 OF 3 OR 3 OF 3.

PROJECT NO. R-0609IA

GUILFORD COUNTY

STATION: 28+77.454 -L-

SHEET 2 OF 3

STATE OF NORTH CAROLINA
DEPARTMENT OF TRANSPORTATION
RALEIGH

SUPERSTRUCTURE
PLAN OF SPANS
(SPAN B)

NORTH CAROLINA PROFESSIONAL SEAL 23926 ENGINEER BRIAN C. HANKS
5/22/06

REVISIONS						SHEET NO.
NO.	BY:	DATE:	NO.	BY:	DATE:	S-42
1			3			TOTAL SHEETS
2			4			321

DRAWN BY : D. G. ELY DATE : 11/22/04
CHECKED BY : R. W. WRIGHT DATE : 2/05

15-MAY-2006 10:25
J:\STRUCT-1\frye\FINAL_~1\Str2\R-0609IA_sd_PS_02.dgn
rwwright

STR. #2

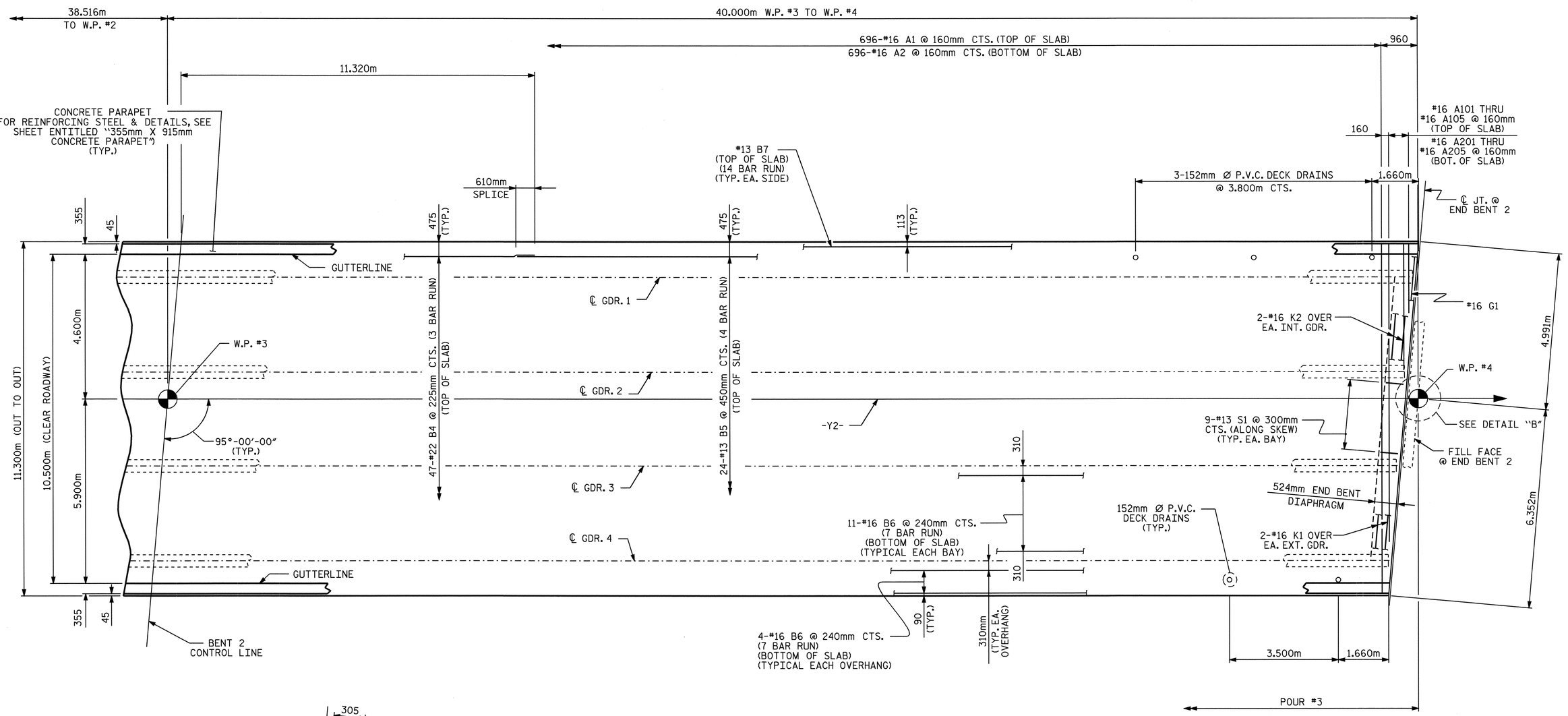

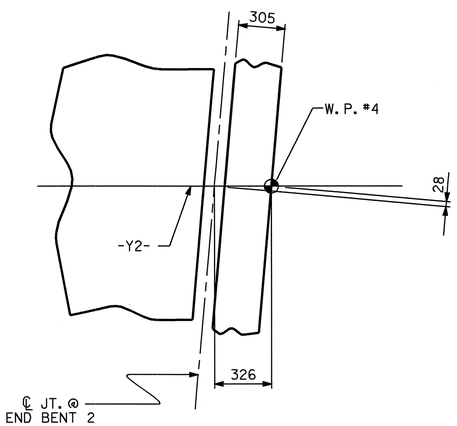

DETAIL "B"

PLAN OF SPAN C

FOR TRANSVERSE CONSTRUCTION JOINT DETAILS AND LOCATION, SEE "SUPERSTRUCTURE - BILL OF MATERIAL" SHEET.

PROJECT NO. R-0609IA

GUILFORD COUNTY

STATION: 28+77.454 -L-

SHEET 3 OF 3

STATE OF NORTH CAROLINA
DEPARTMENT OF TRANSPORTATION
RALEIGH

SUPERSTRUCTURE
PLAN OF SPANS
(SPAN C)

REVISIONS						SHEET NO.
NO.	BY:	DATE:	NO.	BY:	DATE:	S-43
1			3			TOTAL SHEETS
2			4			321

NORTH CAROLINA PROFESSIONAL SEAL 23926 ENGINEER BRIAN C. HANKS

5/22/06

DRAWN BY : D. G. ELY DATE : 11/22/04
CHECKED BY : R. W. WRIGHT DATE : 2/05

15-MAY-2006 10:25
J:\STRUCT~1\frye\FINAL_~1\Str2\R-0609IA_sd_PS_02.dgn
rwwright

STR. #2

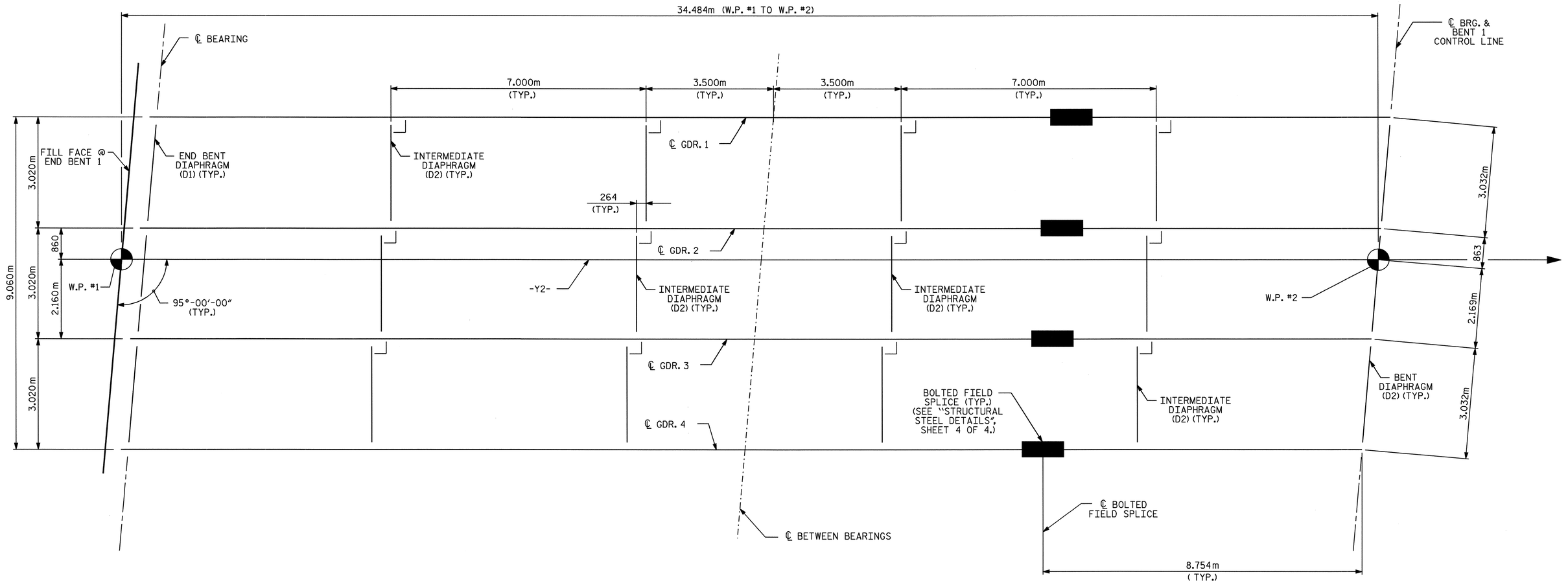

EXP.
E12, P1

FIX
M1, PB1

FRAMING PLAN - SPAN A

PROJECT NO. R-0609IA

GUILFORD COUNTY

STATION: 28+77.454 -L-

SHEET 1 OF 3

STATE OF NORTH CAROLINA
DEPARTMENT OF TRANSPORTATION
RALEIGH

FRAMING PLAN
SPAN A

NORTH CAROLINA PROFESSIONAL SEAL 23926 ENGINEER BRIAN C. HANKS
5/22/06

REVISIONS						SHEET NO.
NO.	BY:	DATE:	NO.	BY:	DATE:	S-44
1			3			TOTAL SHEETS
2			4			321

DRAWN BY : D. G. ELY DATE : 10/19/04
CHECKED BY : R. W. WRIGHT DATE : 2/05

15-MAY-2006 10:26
J:\STRUCT~1\frye\FINAL_~1\Str2\R-0609IA_sd_FP_02.dgn
rwwright

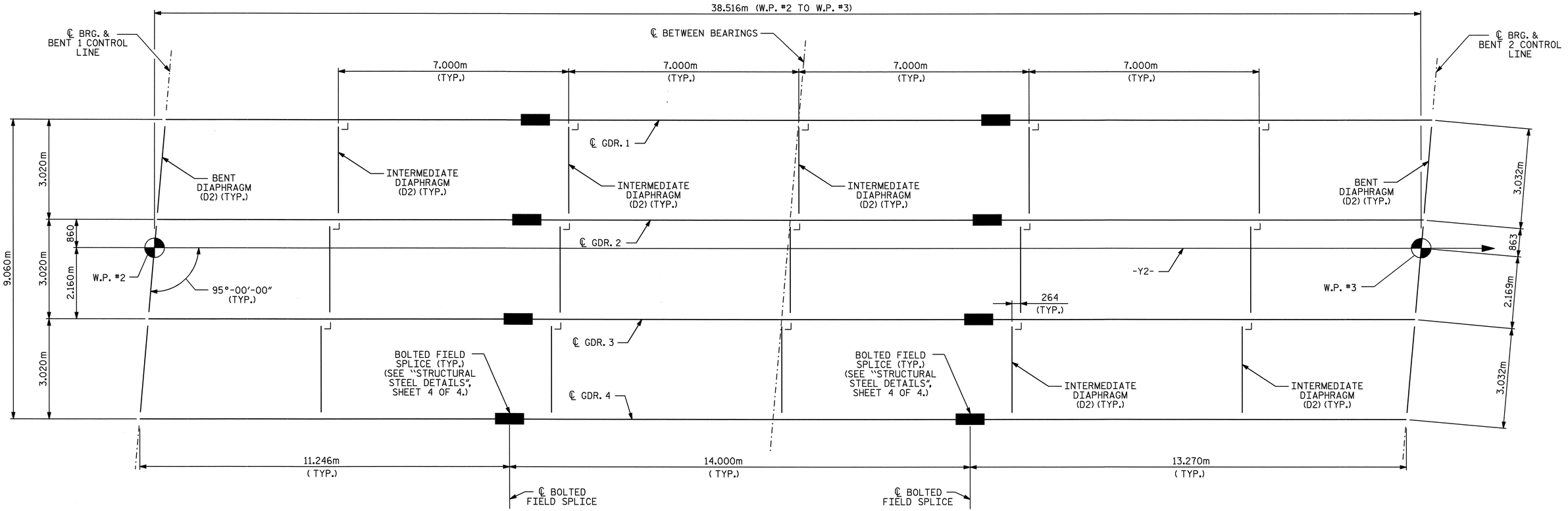

FIX
M1, PB1

FIX
M1, PB1

FRAMING PLAN - SPAN B

PROJECT NO. R-0609IA

GUILFORD COUNTY

STATION: 28+77.454 -L-

SHEET 2 OF 3

STATE OF NORTH CAROLINA
DEPARTMENT OF TRANSPORTATION
RALEIGH

FRAMING PLAN
SPAN B

REVISIONS						SHEET NO.
NO.	BY:	DATE:	NO.	BY:	DATE:	S-45
1			3			TOTAL SHEETS
2			4			321

NORTH CAROLINA PROFESSIONAL SEAL 23926 ENGINEER BRIAN C. HAMMS
5/22/06

DRAWN BY : D. G. ELY DATE : 10/19/04
CHECKED BY : R. W. WRIGHT DATE : 2/05

15-MAY-2006 10:26
J:\STRUCT~1\frye\FINAL_~1\Str2\R-0609IA_sd_FP_02.dgn
rwwright

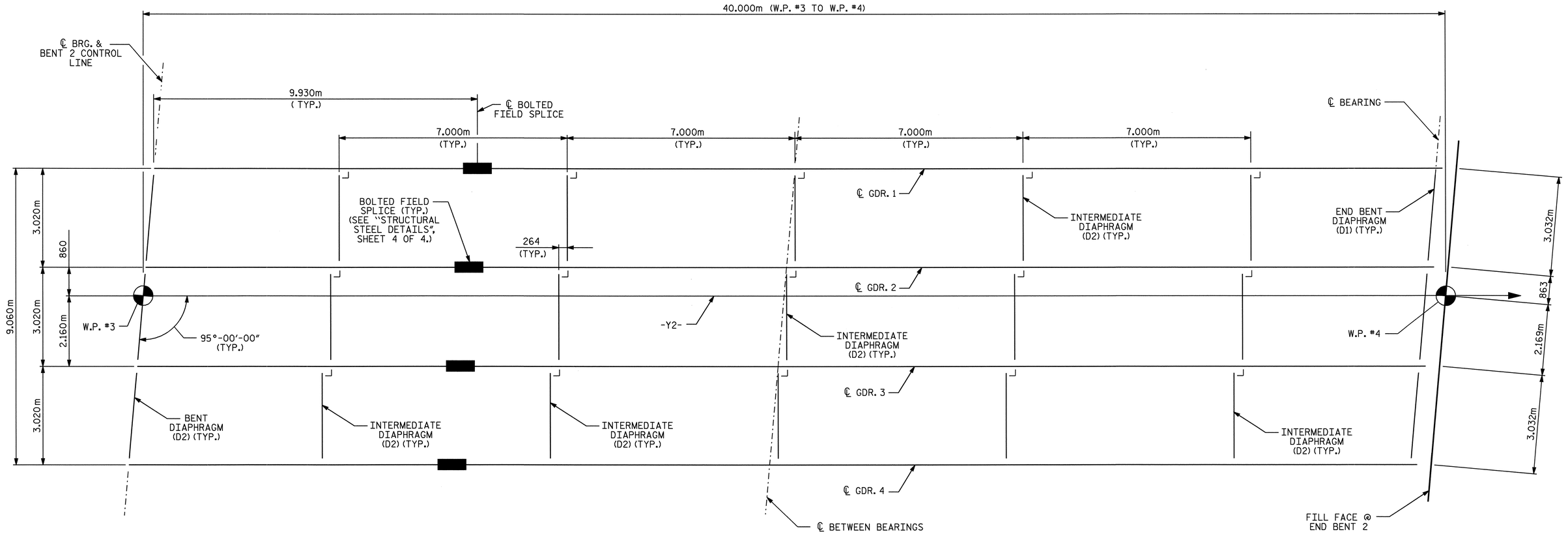

FIX
M1, PB1

EXP.
E12, P1

FRAMING PLAN - SPAN C

PROJECT NO. R-0609IA

GUILFORD COUNTY

STATION: 28+77.454 -L-

SHEET 3 OF 3

STATE OF NORTH CAROLINA
DEPARTMENT OF TRANSPORTATION
RALEIGH

FRAMING PLAN
SPAN C

REVISIONS						SHEET NO.
NO.	BY:	DATE:	NO.	BY:	DATE:	S-46
1			3			TOTAL SHEETS
2			4			321

NORTH CAROLINA PROFESSIONAL SEAL 23926 ENGINEER BRIAN C. HANKS
5/22/06

DRAWN BY : D. G. ELY DATE : 10/19/04
CHECKED BY : R. W. WRIGHT DATE : 2/05

15-MAY-2006 10:27
J:\STRUCT~1\frye\FINAL_~1\Str2\R-0609IA_sd_FP_02.dgn
rwwright

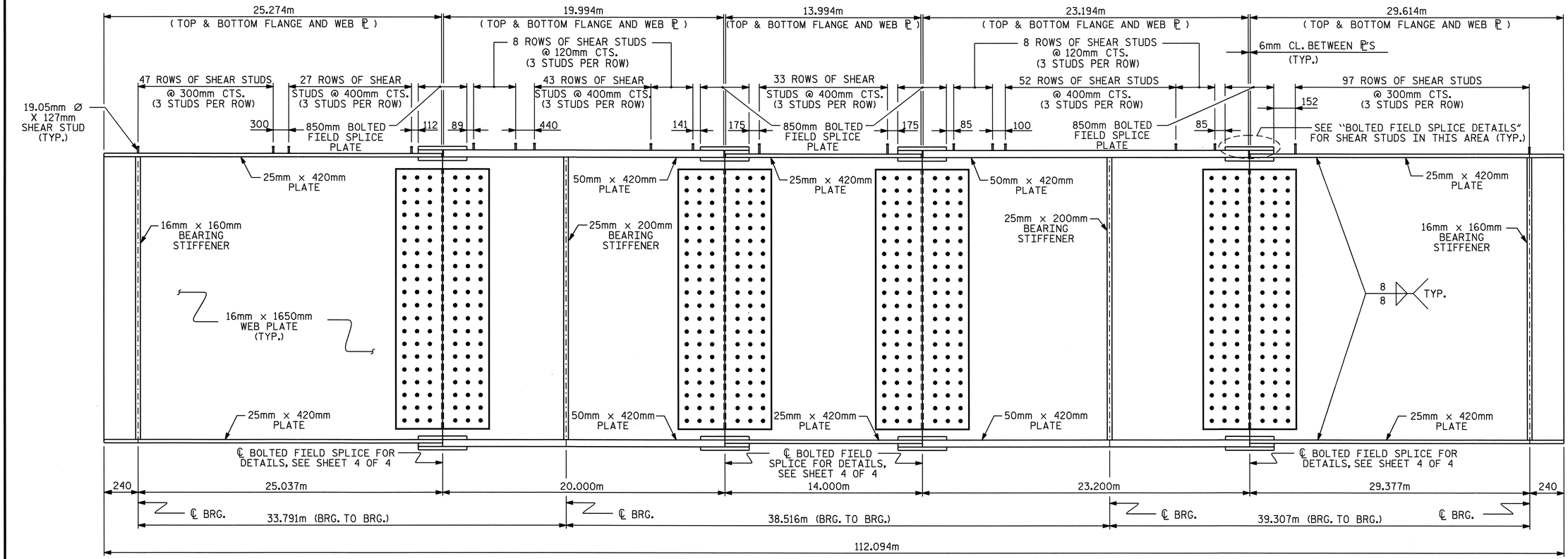

PLATE GIRDER ELEVATION

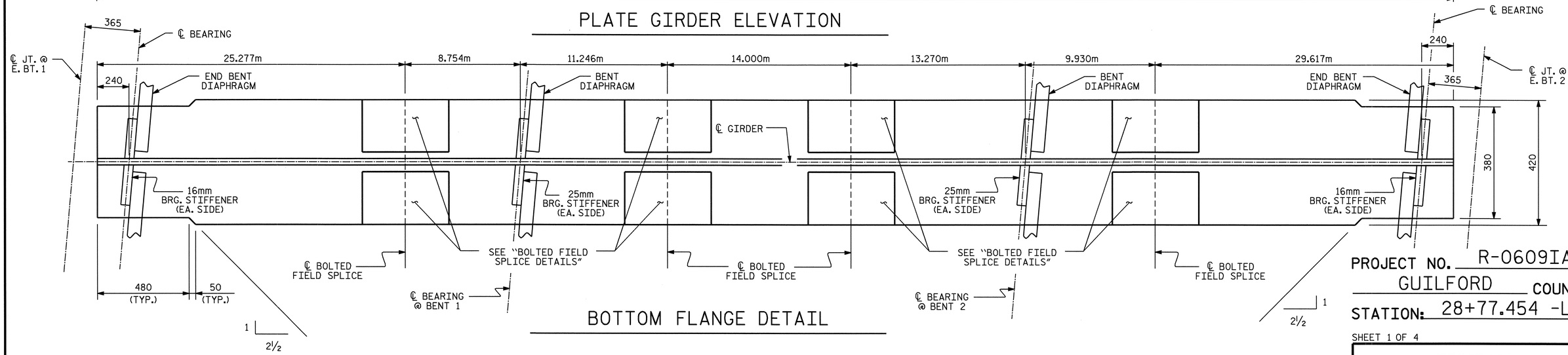

BOTTOM FLANGE DETAIL

PROJECT NO. R-0609IA

GUILFORD COUNTY

STATION: 28+77.454 -L-

SHEET 1 OF 4

STATE OF NORTH CAROLINA
DEPARTMENT OF TRANSPORTATION
RALEIGH

STRUCTURAL STEEL DETAILS

REVISIONS						SHEET NO.
NO.	BY:	DATE:	NO.	BY:	DATE:	S-47
1			3			TOTAL SHEETS
2			4			321

NORTH CAROLINA PROFESSIONAL SEAL 23926 ENGINEER BRIAN C. HANKS
5/22/06

DRAWN BY : D. G. ELY DATE : 10/21/04
CHECKED BY : R. W. WRIGHT DATE : 2/05

15-MAY-2006 10:27
J:\STRUCT-\\frye\FINAL_~1\Str2\R-0609IA_sd_SS_02.dgn
rwwright

STR. 2

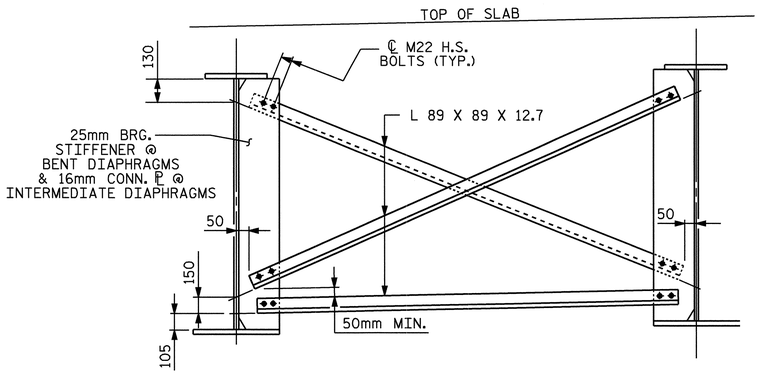

TYPICAL INTERMEDIATE & BENT DIAPHRAGM (D2)

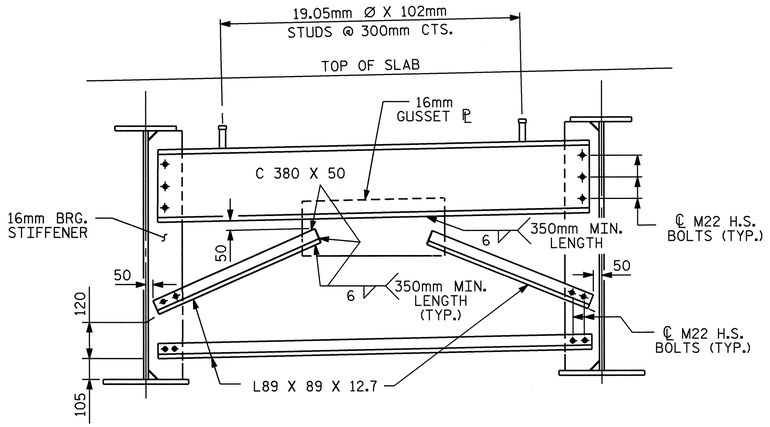

END BENT DIAPHRAGM (D1)

NOTES

ALL STRUCTURAL STEEL SHALL BE AASHTO M270 GRADE 345W AND PAINTED IN ACCORDANCE WITH SYSTEM 4 OF ARTICLE 442-7 OF THE STANDARD SPECIFICATIONS UNLESS OTHERWISE NOTED ON THE PLANS.

ALL DIMENSIONS SHOWN ARE HORIZONTAL OR VERTICAL, UNLESS OTHERWISE NOTED.

ALL FIELD CONNECTIONS TO BE 22.23mm DIAMETER HIGH STRENGTH BOLTS UNLESS OTHERWISE NOTED.

BEARING STIFFENERS SHALL BE PLUMB.

STUDS ON GIRDERS MAY BE SHIFTED UP TO 25mm IF NECESSARY TO CLEAR FLANGE SPLICE WELD.

FOR CHARPY V-NOTCH TEST, SEE SHEET 3 OF 4.

END OF BEAMS AND GIRDERS SHALL BE PLUMB.

TENSION ON THE AASHTO M164 BOLTS SHALL BE CALIBRATED USING DIRECT TENSION INDICATOR WASHERS IN ACCORDANCE WITH ARTICLE 440-10 OF THE STANDARD SPECIFICATIONS.

SHOP SPLICES ARE PERMITTED TO LIMIT THE MAXIMUM REQUIRED FLANGE PIECE LENGTHS TO 18 METERS AND WEB PIECE LENGTHS TO 14 METERS. PERMITTED FLANGE AND WEB SHOP SPLICES SHALL NOT BE LOCATED WITHIN 4.5 METERS OF MAXIMUM DEAD LOAD DEFLECTION NOR WITHIN 4.5 METERS OF INTERMEDIATE BEARINGS OF CONTINUOUS UNITS. KEEP 600mm MINIMUM BETWEEN WEB AND FLANGE SHOP SPLICES. KEEP 150mm MINIMUM BETWEEN CONNECTOR PLATE WELDS AND WEB OR FLANGE SHOP SPLICES.

AT THE CONTRACTOR'S OPTION, THE DIAPHRAGM WITH THE WELDED GUSSET PLATES MAY BE USED IN LIEU OF THE DIAPHRAGM WITH BOLTED ANGLES AT NO ADDITIONAL COST TO THE DEPARTMENT.

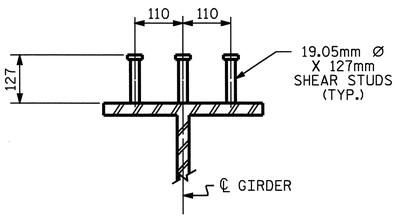

SHEAR STUD DETAILS

(TYP. EA. GDR.)

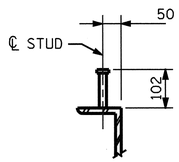

SHEAR STUD DETAILS

(TYP. EA. END BENT DIAPHRAGM)

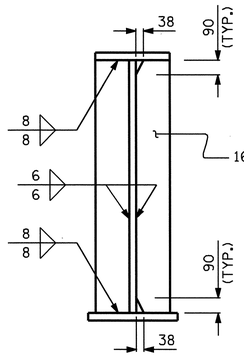

CONNECTOR PL

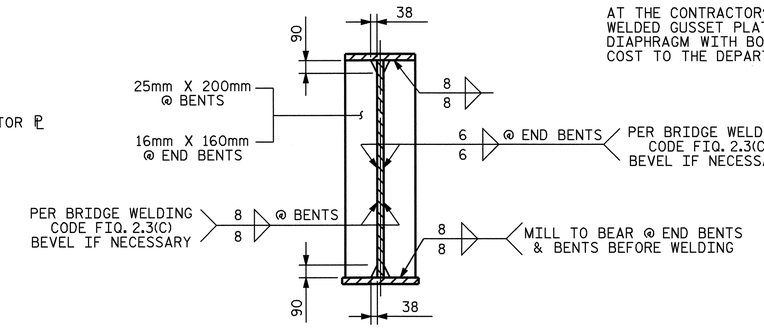

BEARING STIFFENER

BEARING STIFFENER MAY REQUIRE COPING IF WIDER THAN BOTTOM FLANGE TO AVOID INTERFERENCE WITH THE ANCHOR BOLT.

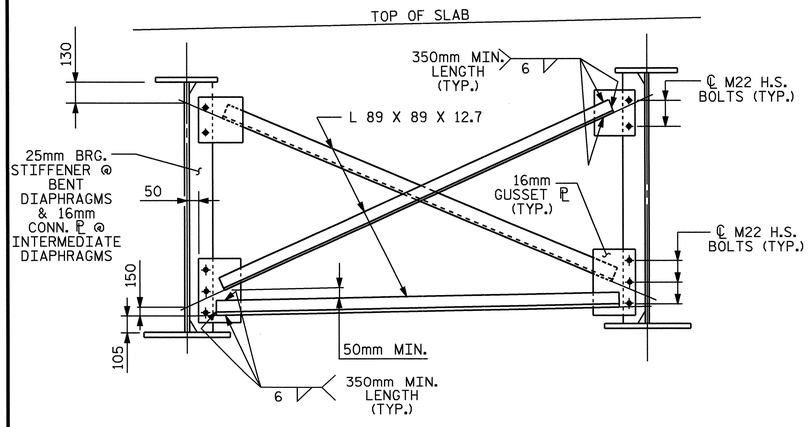

OPTIONAL INTERMEDIATE DIAPHRAGM (D2)

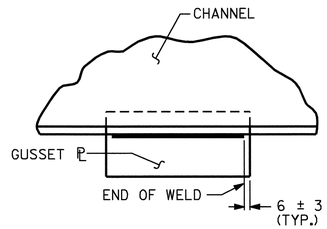

TYPICAL GUSSET PLATE CONNECTION

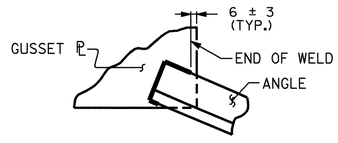

TYPICAL ANGLE TO GUSSET PLATE CONNECTION

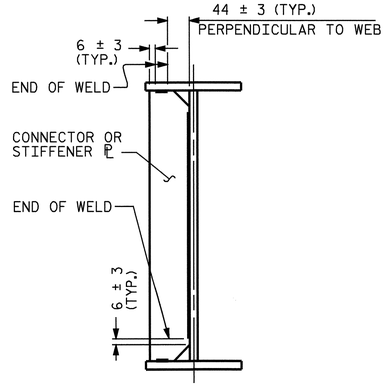

TYPICAL STIFFENER OR CONNECTOR PLATE CONNECTIONS

WELD TERMINATION DETAILS

PROJECT NO. R-0609IA

GUILFORD COUNTY

STATION: 28+77.454 -L-

SHEET 2 OF 4

STATE OF NORTH CAROLINA
DEPARTMENT OF TRANSPORTATION
RALEIGH

STRUCTURAL STEEL DETAILS

REVISIONS						SHEET NO.
NO.	BY:	DATE:	NO.	BY:	DATE:	S-48
1			3			TOTAL SHEETS
2			4			321

NORTH CAROLINA PROFESSIONAL SEAL 23926 ENGINEER BRIAN C. HAWKS
5/22/06

DRAWN BY : D. G. ELY DATE : 10/21/04
CHECKED BY : R. W. WRIGHT DATE : 2/05

15-MAY-2006 10:28
J:\STRUCT~1\frye\FINAL_~1\Str2\R-0609IA_sd_SS_02.dgn
rwwright

STR. 2

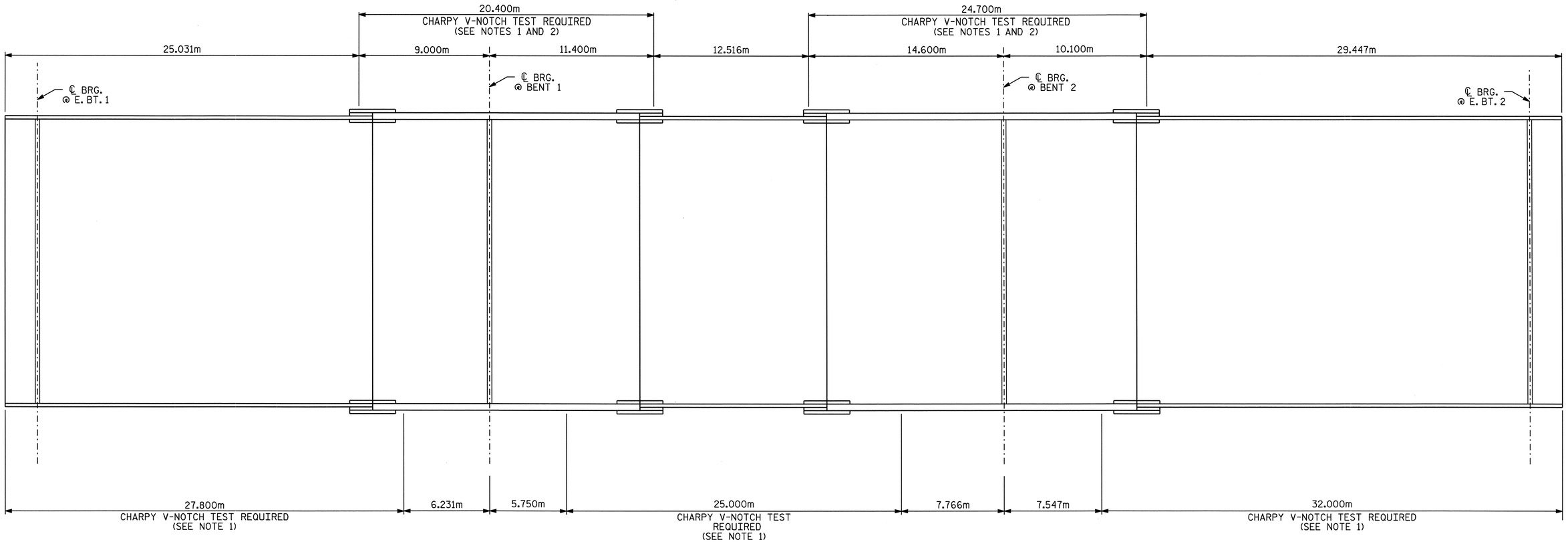

NOTE 1: CHARPY V-NOTCH TESTS ARE REQUIRED FOR ALL TOP OR BOTTOM FLANGE PLATES WHICH FALL WITHIN THESE LIMITS, ALL WEB PLATES, AND ALL SPLICE PLATES. IF A PERMITTED SHOP FLANGE SPLICE IS NOT USED, CHARPY V-NOTCH TESTS WILL BE REQUIRED FOR THE ENTIRE FLANGE PLATE. FOR CHARPY V-NOTCH TESTS, SEE ARTICLE 1072-9 OF THE STANDARD SPECIFICATIONS.

NOTE 2: NO WELDING OF FORMS OR FALSEWORK TO THE TOP FLANGE WILL BE PERMITTED IN THIS REGION.

CHARPY V-NOTCH TEST FOR CONTINUOUS PLATE GIRDERS

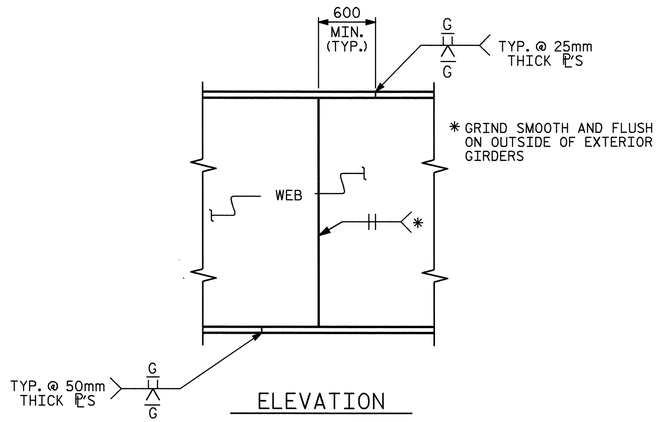

ELEVATION

PERMISSIBLE SHOP FLANGE AND WEB SPLICES

PROJECT NO. R-0609IA

GUILFORD COUNTY

STATION: 28+77.454 -L-

SHEET 3 OF 4

STATE OF NORTH CAROLINA
DEPARTMENT OF TRANSPORTATION
RALEIGH

STRUCTURAL STEEL DETAILS

REVISIONS						SHEET NO.
NO.	BY:	DATE:	NO.	BY:	DATE:	S-49
1			3			TOTAL SHEETS
2			4			321

NORTH CAROLINA PROFESSIONAL SEAL 23926 ENGINEER BRIAN C. HANKS
5/22/06

DRAWN BY : D. G. ELY DATE : 10/22/04
CHECKED BY : R. W. WRIGHT DATE : 2/05

15-MAY-2006 10:28
J:\STRUCT-1\frye\FINAL_~1\Str2\R-0609IA_sd_SS_02.dgn
rwwright

STR. #2

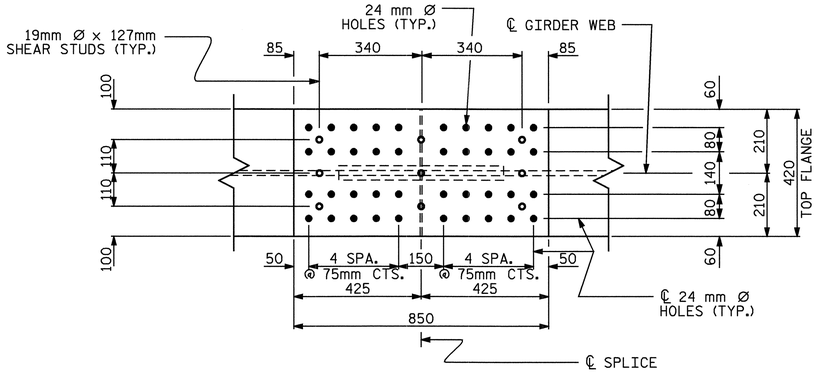

PLAN (TOP OF TOP FLANGE)

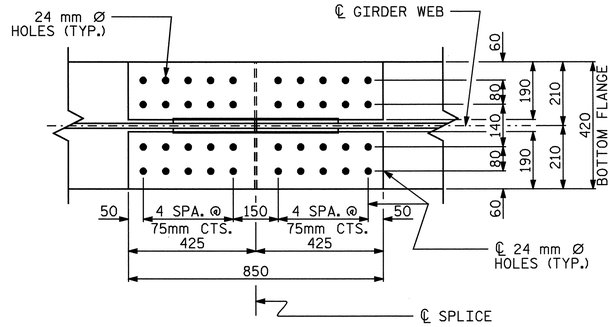

PLAN (TOP OF BOTTOM FLANGE)

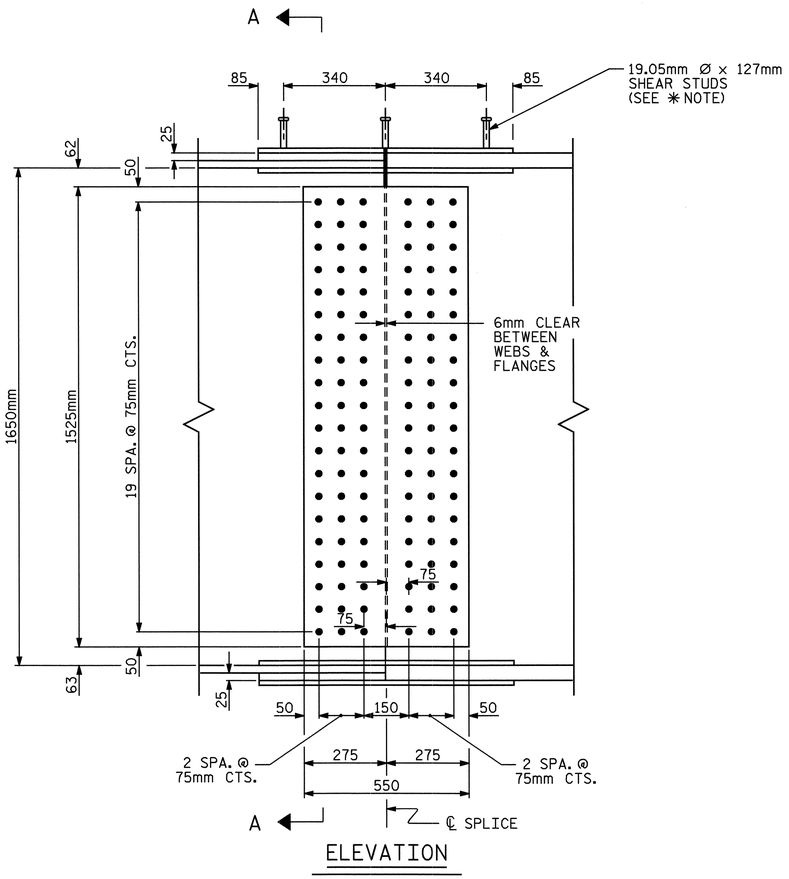

ELEVATION

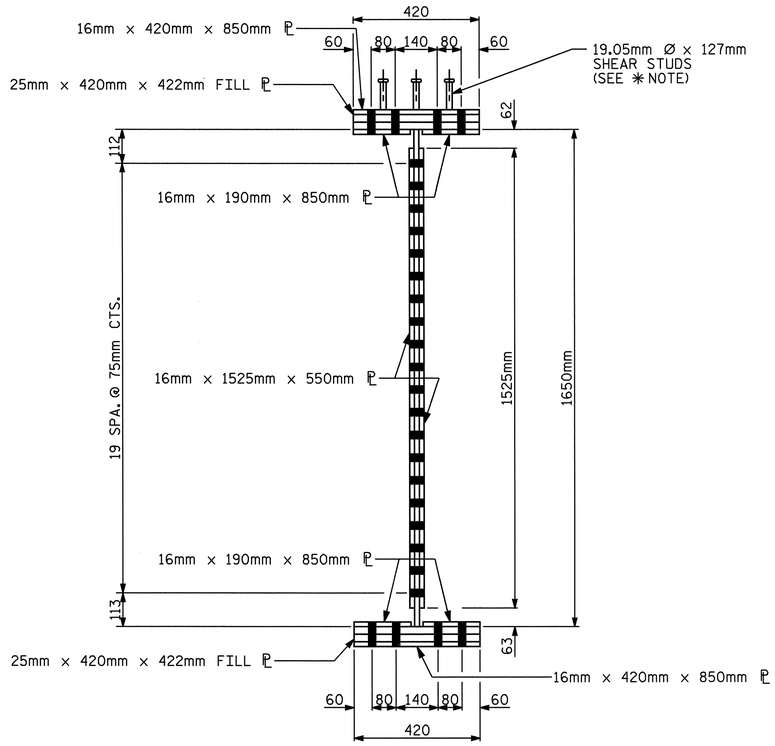

SECTION A-A

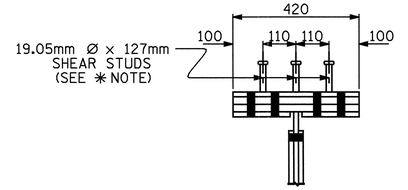

SHEAR STUD DETAIL
FOR TOP FLANGE SPLICE PLATE

✳ NOTE: SHEAR STUDS ARE TO BE SHOP WELDED ON TOP OF PLATE BEFORE FIELD ASSEMBLY

BOLTED FIELD SPLICE DETAILS

(TYPICAL EACH FIELD SPLICE)

PROJECT NO. R-0609IA
GUILFORD COUNTY
STATION: 28+77.454 -L-

SHEET 4 OF 4

STATE OF NORTH CAROLINA
DEPARTMENT OF TRANSPORTATION
RALEIGH

STRUCTURAL STEEL DETAILS

BOLTED FIELD SPLICE

REVISIONS						SHEET NO.
NO.	BY:	DATE:	NO.	BY:	DATE:	S-50
1			3			TOTAL SHEETS
2			4			321

NORTH CAROLINA PROFESSIONAL SEAL 23926 ENGINEER BRIAN C. HAWKS
3/22/06

DRAWN BY : D. G. ELY DATE : 10/20/04
CHECKED BY : R. W. WRIGHT DATE : 2/05

15-MAY-2006 10:28
J:\STRUCT~1\frye\FINAL_~1\Str2\R-0609IA_sd_SS_02.dgn
rwwright

STR. #2

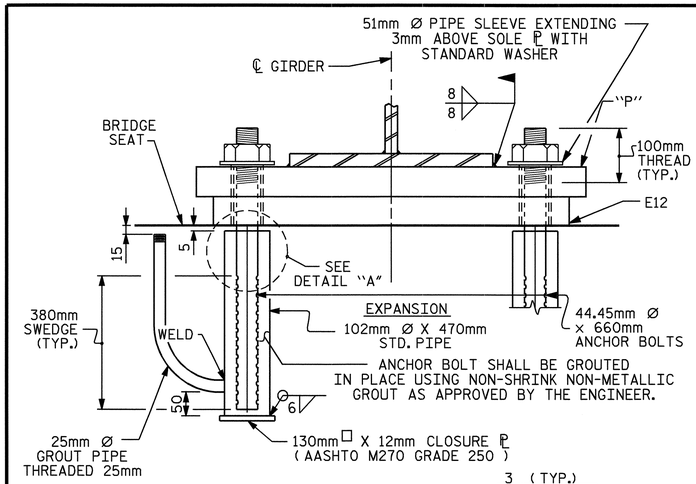

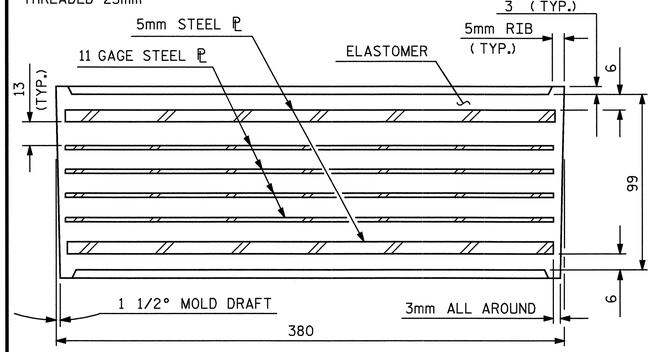

TYPICAL SECTION OF ELASTOMERIC BEARING

ELASTOMERIC BEARING NOTES

FOR ELASTOMERIC BEARINGS, SEE SPECIAL PROVISIONS.

AT ALL POINTS OF SUPPORT, NUTS FOR ANCHOR BOLTS ARE TO BE TIGHTENED FINGER TIGHT AND THEN BACKED OFF $\frac{1}{2}$ TURN. THE THREAD OF THE NUT AND BOLT SHALL THEN BE BURRED WITH A SHARP POINTED TOOL.

THE 51mm Ø PIPE SLEEVE SHALL BE CUT FROM SCHEDULE 40 PVC PLASTIC PIPE. THE PVC PLASTIC PIPE SHALL MEET THE REQUIREMENTS OF ASTM D1785.

THE PAYMENT FOR THE PIPE SLEEVES SHALL BE INCLUDED IN THE SEVERAL PAY ITEMS.

SOLE PLATE SHALL BE AASHTO M270 GRADE 345W AND SHALL NOT BE GALVANIZED, ANCHOR BOLTS AND NUTS SHALL BE GALVANIZED IN ACCORDANCE WITH THE STANDARD SPECIFICATIONS.

ANCHOR BOLTS SHALL MEET THE REQUIREMENTS OF ASTM A449. NUTS SHALL MEET THE REQUIREMENTS OF AASHTO M291M-12 OR AASHTO M292M-2H. WASHERS SHALL MEET THE REQUIREMENTS OF AASHTO M293M. SHOP DRAWINGS ARE NOT REQUIRED FOR ANCHOR BOLTS, NUTS AND WASHERS. SHOP INSPECTION IS REQUIRED.

WHEN FIELD WELDING THE SOLE PLATE TO THE GIRDER FLANGE, USE TEMPERATURE INDICATING WAX PENS, OR OTHER SUITABLE MEANS, TO ENSURE THAT THE TEMPERATURE OF THE SOLE PLATE DOES NOT EXCEED 149°C. TEMPERATURES ABOVE THIS MAY DAMAGE THE ELASTOMER.

ALL SURFACES OF BEARING PLATES SHALL BE SMOOTH AND STRAIGHT.

THE CLOSURE PLATE, GROUT PIPE AND STANDARD PIPE FOR THE EXPANSION ASSEMBLY NEED NOT BE GALVANIZED.

THE CONTRACTOR'S ATTENTION IS CALLED TO THE FOLLOWING PROCEDURES TO ACCOMODATE GIRDER TRANSLATION AND END ROTATION:

1 ONCE THE DECK HAS CURED, THE GIRDERS SHALL BE JACKED AND THE ANCHOR BOLTS, SOLE PLATE, AND ELASTOMERIC BEARING SLOTS SHALL BE CENTERED AS NEARLY AS PRACTICAL ABOUT THE BEARING STIFFENER. THIS OPERATION SHALL BE PERFORMED AT APPROXIMATELY 60° F (16° C).

2 AFTER CENTERING THE SLOTS AND ANCHOR BOLTS, THE SOLE PLATES SHALL BE FIELD WELDED TO THE GIRDER FLANGES AND ANCHOR BOLTS GROUTED.

THE CONTRACTOR MAY PROPOSE ALTERNATE METHODS, PROVIDED DETAILS ARE SUBMITTED TO THE ENGINEER FOR REVIEW AND APPROVAL.

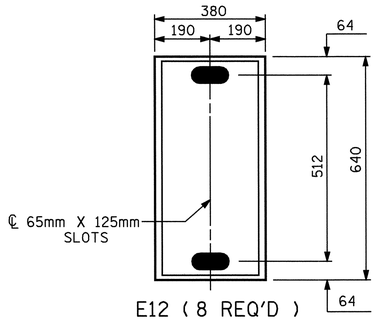

E12 (8 REQ'D)

PLAN VIEW OF ELASTOMERIC BEARING

TYPE VI

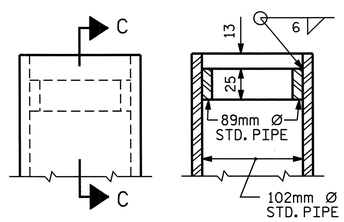

SECTION C-C

DETAIL "A"

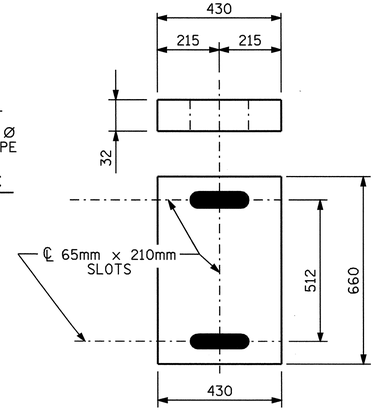

P1 (8 REQ'D)
EXPANSION

SOLE PLATE DETAILS ("P")

—LOAD RATINGS—	
	MAX.D.L.+ L.L.
TYPE VI	1134 kN

ASSEMBLED BY :	D. G. ELY	DATE :	11/15/04
CHECKED BY :	R. W. WRIGHT	DATE :	2/05
DRAWN BY :	EEM 10/95	REV. 7/17/98	RWW/LES
CHECKED BY :	PEK 10/95	REV. 8/16/99	MAB/LES
		REV. 10/17/00	RWW/LES

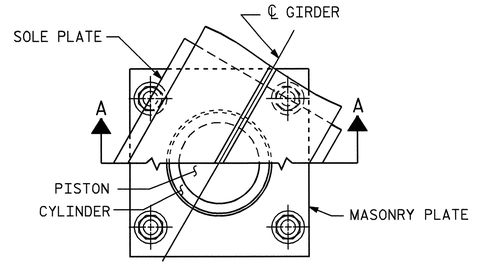

CUT-AWAY PLAN

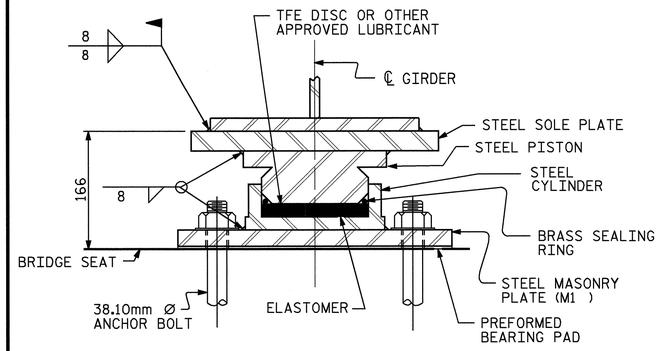

SECTION A-A

PB1, FIXED
(8 REQ'D.)

POT BEARING DETAILS

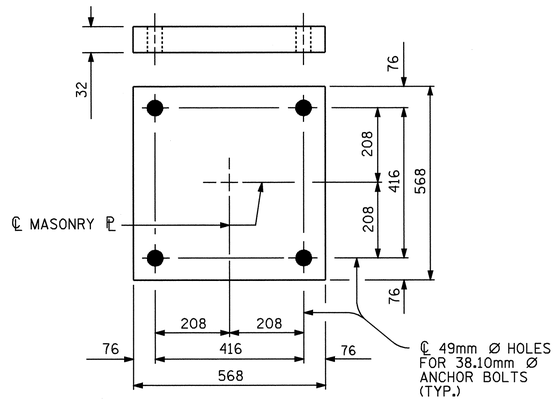

PLAN
M1 (8 REQ'D.)

MASONRY PLATE DETAILS

TABLE FOR LOADS					
BEARING	LOCATION	VERTICAL LOAD (kN)			LATERAL LOAD (kN)
		DEAD	LIVE	TOTAL	
PB1 (FIXED)	BENT 1	1162	602	1764	233
PB1 (FIXED)	BENT 2	1328	645	1973	266

POT BEARING NOTES

FOR POT BEARINGS, SEE SPECIAL PROVISIONS.

AT ALL POINTS OF SUPPORT, NUTS FOR ANCHOR BOLTS SHALL BE TIGHTENED FINGER TIGHT AND GIVEN AN ADDITIONAL $\frac{1}{4}$ TURN. THE THREAD OF THE NUT AND BOLT SHALL THEN BE BURRED WITH A SHARP POINTED TOOL.

WHEN WELDING THE SOLE PLATE TO THE GIRDER, USE TEMPERATURE INDICATING WAX PENS, OR OTHER SUITABLE MEANS, TO ENSURE THAT THE TEMPERATURE OF THE BEARING DOES NOT EXCEED 121° C TEMPERATURES ABOVE THIS MAY DAMAGE THE TFE OR ELASTOMER.

SOLE PLATES SHOULD BE WELDED TO BEAM FLANGES BEFORE FALSEWORK IS PLACED.

ALL SURFACES OF BEARING PLATES SHALL BE SMOOTH AND STRAIGHT.

FOR THERMAL SPRAYED COATINGS (METALLIZATION), SEE SPECIAL PROVISIONS.

THE CONTRACTOR MAY SUBSTITUTE DISC BEARINGS FOR THE POT BEARINGS SHOWN. FOR OPTIONAL DISC BEARINGS, SEE SPECIAL PROVISIONS.

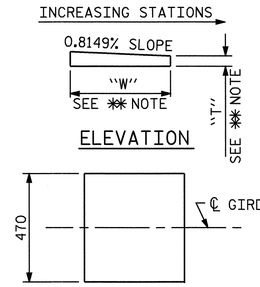

ELEVATION

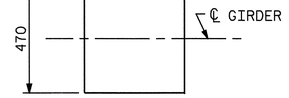

PLAN

✱✱ NOTE:
DIMENSIONS "W" AND "T" ARE TO BE DETERMINED BY THE MANUFACTURER.

SOLE PLATE DETAILS

PROJECT NO. R-0609IA
GUILFORD COUNTY
STATION: 28+77.454 -L-

STATE OF NORTH CAROLINA
DEPARTMENT OF TRANSPORTATION
RALEIGH

BEARING DETAILS
(STEEL SUPERSTRUCTURE)

NORTH CAROLINA PROFESSIONAL SEAL 23926 ENGINEER BRIAN C. HANKS
5/22/06

REVISIONS						SHEET NO.
NO.	BY:	DATE:	NO.	BY:	DATE:	S-51
1			3			TOTAL SHEETS
2			4			321

STR. 2

15-MAY-2006 10:29
J:\STRUCT~1\frye\FINAL_~1\Str2\R-0609IA_sd_BR_02.dgn
rwwright

DEAD LOAD DEFLECTION TABLE FOR GIRDERS

GIRDERS 1 & 4 (EXTERIOR GIRDERS)

SPAN A

TWENTIETH POINTS	BRG.	.05	.10	.15	.20	.25	.30	.35	.40	.45	.50	.55	.60	.65	.70	.75	.80	.85	.90	.95	BRG.
DEFLECTION DUE TO WEIGHT OF GIRDER	0	-.002	-.003	-.004	-.005	-.006	-.007	-.007	-.008	-.008	-.007	-.007	-.006	-.005	-.005	-.004	-.003	-.002	-.001	-.001	0
DEFLECTION DUE TO WEIGHT OF SLAB *	0	-.005	-.012	-.017	-.021	-.026	-.029	-.031	-.031	-.031	-.031	-.029	-.027	-.024	-.020	-.016	-.012	-.009	-.005	-.002	0
DEFLECTION DUE TO WEIGHT OF PARAPET	0	-.001	-.001	-.002	-.003	-.003	-.003	-.004	-.004	-.004	-.004	-.004	-.003	-.003	-.002	-.002	-.002	-.001	-.001	0	0
TOTAL DEAD LOAD DEFLECTION	0	-.008	-.016	-.023	-.029	-.035	-.039	-.042	-.043	-.043	-.042	-.040	-.036	-.032	-.027	-.022	-.017	-.012	-.007	-.003	0
REQUIRED CAMBER	0	8	16	23	29	35	39	42	43	43	42	40	36	32	27	22	17	12	7	3	0

SPAN B

TWENTIETH POINTS	BRG.	.05	.10	.15	.20	.25	.30	.35	.40	.45	.50	.55	.60	.65	.70	.75	.80	.85	.90	.95	BRG.
DEFLECTION DUE TO WEIGHT OF GIRDER	0	0	0	0	-.001	-.001	-.002	-.002	-.002	-.002	-.002	-.002	-.002	-.001	-.001	0	0	0	0	0	0
DEFLECTION DUE TO WEIGHT OF SLAB *	0	.002	.002	.002	.002	.001	.001	-.001	-.001	-.001	-.002	-.001	.001	.001	.003	.004	.005	.005	.005	.002	0
DEFLECTION DUE TO WEIGHT OF PARAPET	0	0	0	0	0	0	0	0	0	-.001	0	0	0	0	0	0	0	0	0	0	0
TOTAL DEAD LOAD DEFLECTION	0	.002	.002	.002	.001	0	-.001	-.003	-.003	-.004	-.004	-.003	-.001	0	.002	.004	.005	.005	.005	.002	0
REQUIRED CAMBER	0	-2	-2	-2	-1	0	1	3	3	4	4	3	1	0	-2	-4	-5	-5	-5	-2	0

SPAN C

TWENTIETH POINTS	BRG.	.05	.10	.15	.20	.25	.30	.35	.40	.45	.50	.55	.60	.65	.70	.75	.80	.85	.90	.95	BRG.
DEFLECTION DUE TO WEIGHT OF GIRDER	0	-.001	-.002	-.004	-.005	-.007	-.009	-.011	-.012	-.013	-.014	-.014	-.014	-.014	-.013	-.012	-.010	-.008	-.005	-.003	0
DEFLECTION DUE TO WEIGHT OF SLAB *	0	-.004	-.010	-.016	-.024	-.031	-.038	-.045	-.050	-.055	-.058	-.060	-.059	-.056	-.053	-.046	-.040	-.031	-.022	-.011	0
DEFLECTION DUE TO WEIGHT OF PARAPET	0	-.001	-.001	-.002	-.003	-.004	-.005	-.005	-.006	-.007	-.007	-.007	-.007	-.007	-.006	-.006	-.005	-.004	-.003	-.001	0
TOTAL DEAD LOAD DEFLECTION	0	-.006	-.013	-.022	-.032	-.042	-.052	-.061	-.068	-.075	-.079	-.081	-.080	-.077	-.072	-.064	-.055	-.043	-.030	-.015	0
REQUIRED CAMBER	0	6	13	22	32	42	52	61	68	75	79	81	80	77	72	64	55	43	30	15	0

* INCLUDES SLAB, BUILDUPS & STAY-IN-PLACE FORMS.
ALL VALUES ARE SHOWN IN METERS, EXCEPT "FINAL CAMBER" WHICH IS SHOWN IN MILLIMETERS.

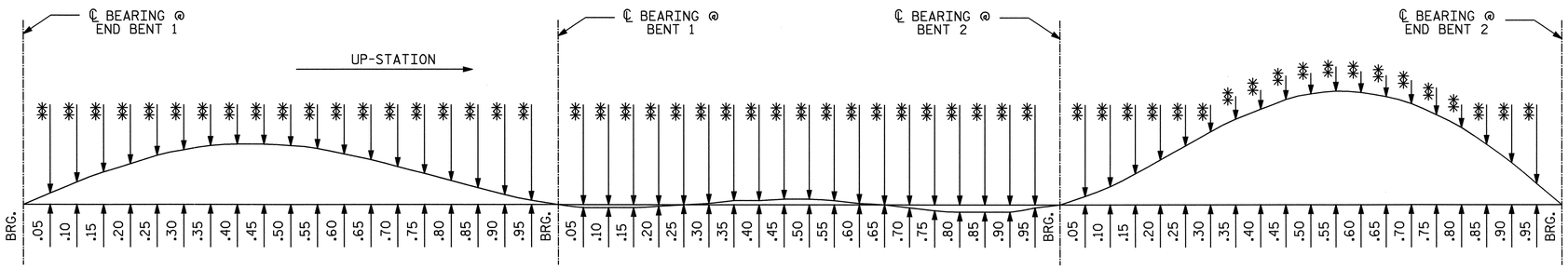

** FOR CAMBER AT TWENTIETH POINTS, SEE TABLES

SPAN "A" SPAN "B" SPAN "C"

SCHEMATIC CAMBER ORDINATES

PROJECT NO. R-0609IA
GUILFORD COUNTY
STATION: 28+77.454 -L-

SHEET 1 OF 2

STATE OF NORTH CAROLINA
DEPARTMENT OF TRANSPORTATION
RALEIGH

SUPERSTRUCTURE

DEAD LOAD DEFLECTIONS

(EXTERIOR GIRDERS 1 & 4)

REVISIONS						SHEET NO.
NO.	BY:	DATE:	NO.	BY:	DATE:	S-52
1			3			TOTAL SHEETS
2			4			321

NORTH CAROLINA PROFESSIONAL SEAL 23926 ENGINEER BRIAN C. HANKS
5/22/06

DRAWN BY : D. G. ELY DATE : 12/8/04
CHECKED BY : R. W. WRIGHT DATE : 2/05

15-MAY-2006 10:29
J:\STRUCT~1\frye\FINAL_~1\Str2\R-0609IA_sd_DL_02.dgn
rwwright

STR. 2

DEAD LOAD DEFLECTION TABLE FOR GIRDERS

	GIRDERS 2 & 3 (INTERIOR GIRDERS)																				
	SPAN A																				
TWENTIETH POINTS	BRG.	.05	.10	.15	.20	.25	.30	.35	.40	.45	.50	.55	.60	.65	.70	.75	.80	.85	.90	.95	BRG.
DEFLECTION DUE TO WEIGHT OF GIRDER	0	-.002	-.003	-.004	-.005	-.006	-.007	-.007	-.008	-.008	-.007	-.007	-.006	-.005	-.005	-.004	-.003	-.002	-.001	-.001	0
DEFLECTION DUE TO WEIGHT OF SLAB *	0	-.006	-.014	-.019	-.024	-.029	-.033	-.035	-.035	-.036	-.035	-.033	-.031	-.027	-.023	-.018	-.014	-.010	-.006	-.002	0
DEFLECTION DUE TO WEIGHT OF PARAPET	0	-.001	-.001	-.002	-.003	-.003	-.003	-.004	-.004	-.004	-.004	-.004	-.003	-.003	-.002	-.002	-.002	-.001	-.001	0	0
TOTAL DEAD LOAD DEFLECTION	0	-.009	-.018	-.025	-.032	-.038	-.043	-.046	-.047	-.048	-.046	-.044	-.040	-.035	-.030	-.024	-.019	-.013	-.008	-.003	0
REQUIRED CAMBER	0	9	18	25	32	38	43	46	47	48	46	44	40	35	30	24	19	13	8	3	0
	SPAN B																				
TWENTIETH POINTS	BRG.	.05	.10	.15	.20	.25	.30	.35	.40	.45	.50	.55	.60	.65	.70	.75	.80	.85	.90	.95	BRG.
DEFLECTION DUE TO WEIGHT OF GIRDER	0	0	0	0	-.001	-.001	-.002	-.002	-.002	-.002	-.002	-.002	-.002	-.001	-.001	0	0	0	0	0	0
DEFLECTION DUE TO WEIGHT OF SLAB *	0	.002	.001	.001	.001	.001	.001	-.001	-.002	-.001	-.002	-.001	.001	.001	.002	.003	.004	.005	.006	.004	0
DEFLECTION DUE TO WEIGHT OF PARAPET	0	0	0	0	0	0	0	0	0	-.001	0	0	0	0	0	0	0	0	0	0	0
TOTAL DEAD LOAD DEFLECTION	0	.002	.001	.001	0	0	-.001	-.003	-.004	-.004	-.004	-.003	-.001	0	.001	.003	.004	.005	.006	.004	0
REQUIRED CAMBER	0	-2	-1	-1	0	0	1	3	4	4	4	3	1	0	-1	-3	-4	-5	-6	-4	0
	SPAN C																				
TWENTIETH POINTS	BRG.	.05	.10	.15	.20	.25	.30	.35	.40	.45	.50	.55	.60	.65	.70	.75	.80	.85	.90	.95	BRG.
DEFLECTION DUE TO WEIGHT OF GIRDER	0	-.001	-.002	-.004	-.005	-.007	-.009	-.011	-.012	-.013	-.014	-.014	-.014	-.014	-.013	-.012	-.010	-.008	-.005	-.003	0
DEFLECTION DUE TO WEIGHT OF SLAB *	0	-.005	-.012	-.019	-.027	-.035	-.043	-.051	-.057	-.062	-.066	-.068	-.067	-.064	-.060	-.053	-.045	-.035	-.024	-.013	0
DEFLECTION DUE TO WEIGHT OF PARAPET	0	-.001	-.001	-.002	-.003	-.004	-.005	-.005	-.006	-.007	-.007	-.007	-.007	-.007	-.006	-.006	-.005	-.004	-.003	-.001	0
TOTAL DEAD LOAD DEFLECTION	0	-.007	-.015	-.025	-.035	-.046	-.057	-.067	-.075	-.082	-.087	-.089	-.088	-.085	-.079	-.071	-.060	-.047	-.032	-.017	0
REQUIRED CAMBER	0	7	15	25	35	46	57	67	75	82	87	89	88	85	79	71	60	47	32	17	0

* INCLUDES SLAB, BUILDUPS & STAY-IN-PLACE FORMS.
ALL VALUES ARE SHOWN IN METERS, EXCEPT "FINAL CAMBER" WHICH IS SHOWN IN MILLIMETERS.

PROJECT NO. R-0609IA
GUILFORD COUNTY
STATION: 28+77.454 -L-

SHEET 2 OF 2

STATE OF NORTH CAROLINA
DEPARTMENT OF TRANSPORTATION
RALEIGH

SUPERSTRUCTURE

DEAD LOAD DEFLECTIONS

(INTERIOR GIRDERS 2 & 3)

NORTH CAROLINA PROFESSIONAL SEAL 23926 ENGINEER BRIAN C. HANKS
5/22/06

REVISIONS						SHEET NO.
NO.	BY:	DATE:	NO.	BY:	DATE:	S-53
1			3			TOTAL SHEETS
2			4			321

DRAWN BY : D. G. ELY DATE : 12/8/04
CHECKED BY : R. W. WRIGHT DATE : 2/05

15-MAY-2006 10:29
J:\STRUCT~1\frye\FINAL_~1\Str2\R-0609IA_sd_DL_02.dgn
rwwright

STR. 2

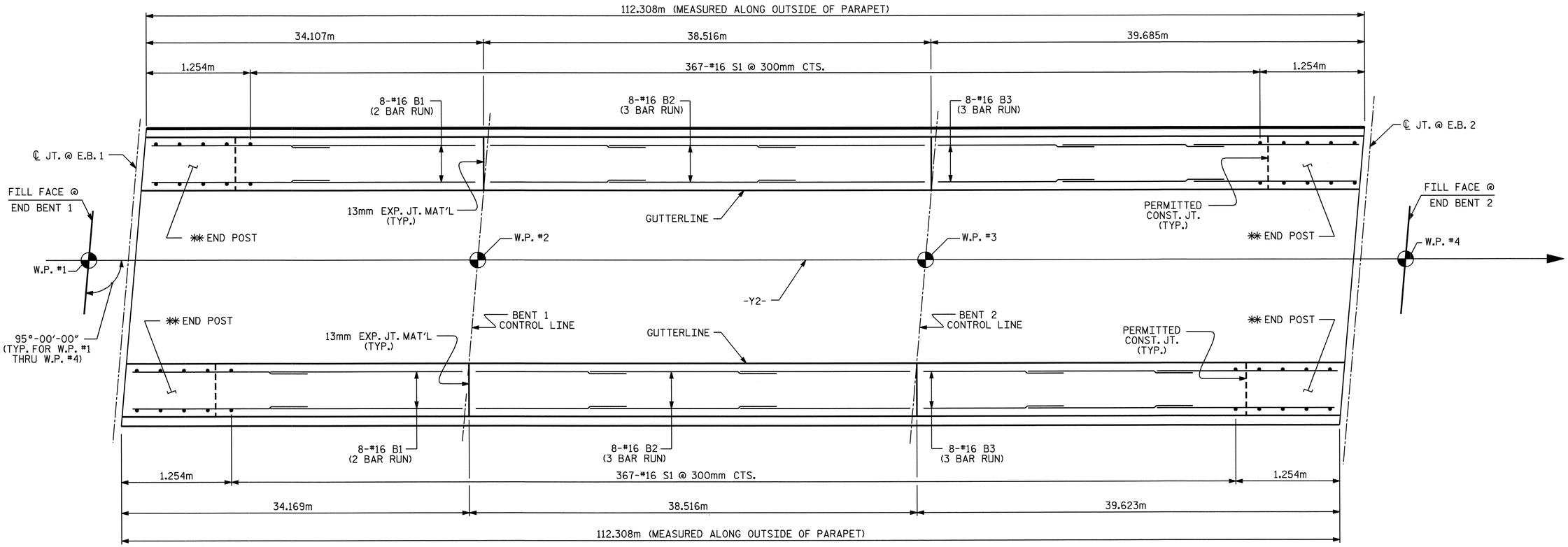

SPAN A SPAN B SPAN C

** FOR REINFORCING STEEL AND DETAILS IN END POST SEE SHEET 2 OF 2.

PROJECT NO. R-0609IA

GUILFORD COUNTY

STATION: 28+77.454 -L-

SHEET 1 OF 2

STATE OF NORTH CAROLINA
DEPARTMENT OF TRANSPORTATION
RALEIGH

355mm X 915mm CONCRETE PARAPET AND END POSTS

REVISIONS						SHEET NO.
NO.	BY:	DATE:	NO.	BY:	DATE:	S-54
1			3			TOTAL SHEETS
2			4			321

NORTH CAROLINA PROFESSIONAL SEAL 23926 ENGINEER BRIAN C. HANKS
5/22/06

DRAWN BY : D. G. ELY DATE : 10/25/04
CHECKED BY : R. W. WRIGHT DATE : 2/05

15-MAY-2006 10:31
J:\STRUCT~1\frye\FINAL_~1\Str2\R-0609IA_SD_MR_02.dgn
rwwright

STR. 2

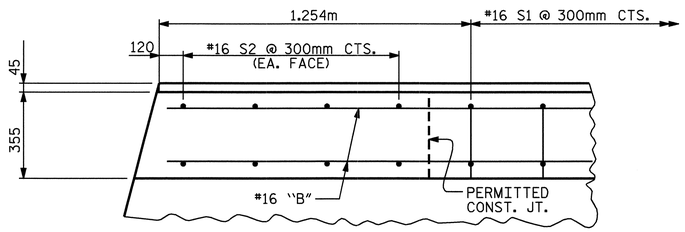

PLAN OF PARAPET

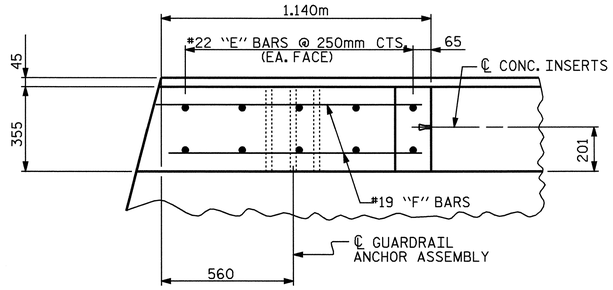

PLAN OF END POST

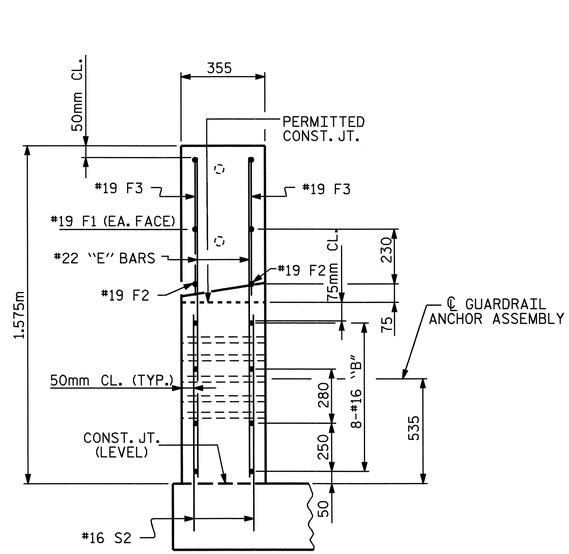

END VIEW

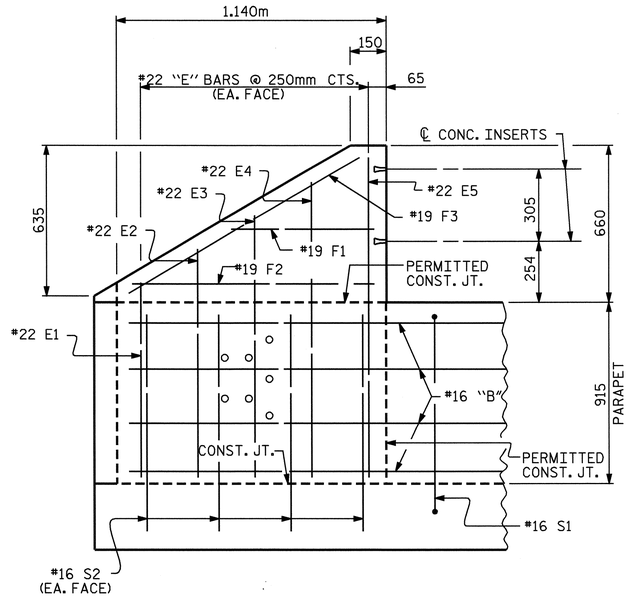

ELEVATION

PARAPET AND END POST FOR TWO BAR RAIL

BAR TYPE

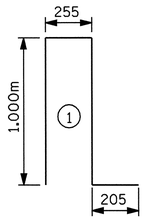

BAR DIMENSION IS OUT TO OUT.

BILL OF MATERIAL FOR PARAPET AND FOUR END POSTS

BAR	NO.	SIZE	TYPE	LENGTH	WEIGHT
* B1	32	16	STR	17540	871
* B2	48	16	STR	13520	1007
* B3	48	16	STR	13880	1034
* E1	8	22	STR	940	23
* E2	8	22	STR	1080	26
* E3	8	22	STR	1220	30
* E4	8	22	STR	1380	34
* E5	8	22	STR	1480	36
* F1	8	19	STR	560	10
* F2	8	19	STR	900	16
* F3	8	19	STR	1020	18
* S1	734	16	1	2460	2802
* S2	32	16	STR	1080	54

* EPOXY COATED REINFORCING STEEL	5961	kg
CLASS "AA" CONCRETE	73.4m ^{3}	
355mm X 915mm CONCRETE PARAPET	224.616	LIN. METER

NOTES

FOR DETAIL OF CONCRETE INSERT AND GUARDRAIL ANCHOR ASSEMBLY, SEE "RAIL POST SPACINGS AND END OF RAIL DETAIL" SHEETS.

THE #16 S2 BARS SHALL BE INSTALLED USING AN ADHESIVE ANCHORING SYSTEM AFTER SAWING THE JOINT. FOR ADHESIVELY ANCHORED BOLTS OR DOWELS, SEE SPECIAL PROVISIONS. THE YIELD LOAD FOR THE #16 S2 BARS IS 82.7 kN. FIELD TESTING OF THE ADHESIVE BONDING SYSTEM IS NOT REQUIRED.

PARAPETS IN A CONTINUOUS UNIT SHALL NOT BE CAST UNTIL ALL SLAB CONCRETE IN THE UNIT HAS BEEN CAST AND HAS REACHED A MINIMUM COMPRESSIVE STRENGTH OF 20.7 MPa.

ALL REINFORCING STEEL IN PARAPETS AND END POSTS SHALL BE EPOXY COATED.

GROOVED CONTRACTION JOINTS, 12mm IN DEPTH, SHALL BE TOOLED IN ALL EXPOSED FACES OF THE PARAPET IN ACCORDANCE WITH ARTICLE 825-10(B) OF THE STANDARD SPECIFICATIONS. THE CONTRACTION JOINTS SHALL BE LOCATED AT A SPACING OF 2.4 METERS TO 3.5 METERS BETWEEN EXPANSION JOINTS. NO CONTRACTION JOINTS WILL BE REQUIRED FOR SEGMENTS LESS THAN 3.5 METERS IN LENGTH.

PROJECT NO. R-0609IA

GUILFORD COUNTY

STATION: 28+77.454 -L-

SHEET 2 OF 2

STATE OF NORTH CAROLINA
DEPARTMENT OF TRANSPORTATION
RALEIGH

355mm X 915mm CONCRETE PARAPET AND END POST

NORTH CAROLINA PROFESSIONAL SEAL 23926 ENGINEER BRIAN C. HANKS
5/22/06

REVISIONS						SHEET NO.
NO.	BY:	DATE:	NO.	BY:	DATE:	S-55
1			3			TOTAL SHEETS
2			4			321

DRAWN BY : D. G. ELY DATE : 10/25/04
CHECKED BY : R. W. WRIGHT DATE : 2/05

15-MAY-2006 10:31
J:\STRUCT~1\frye\FINAL_~1\Str2\R-0609IA_SD_MR_02.dgn
rwwright

STR. 2

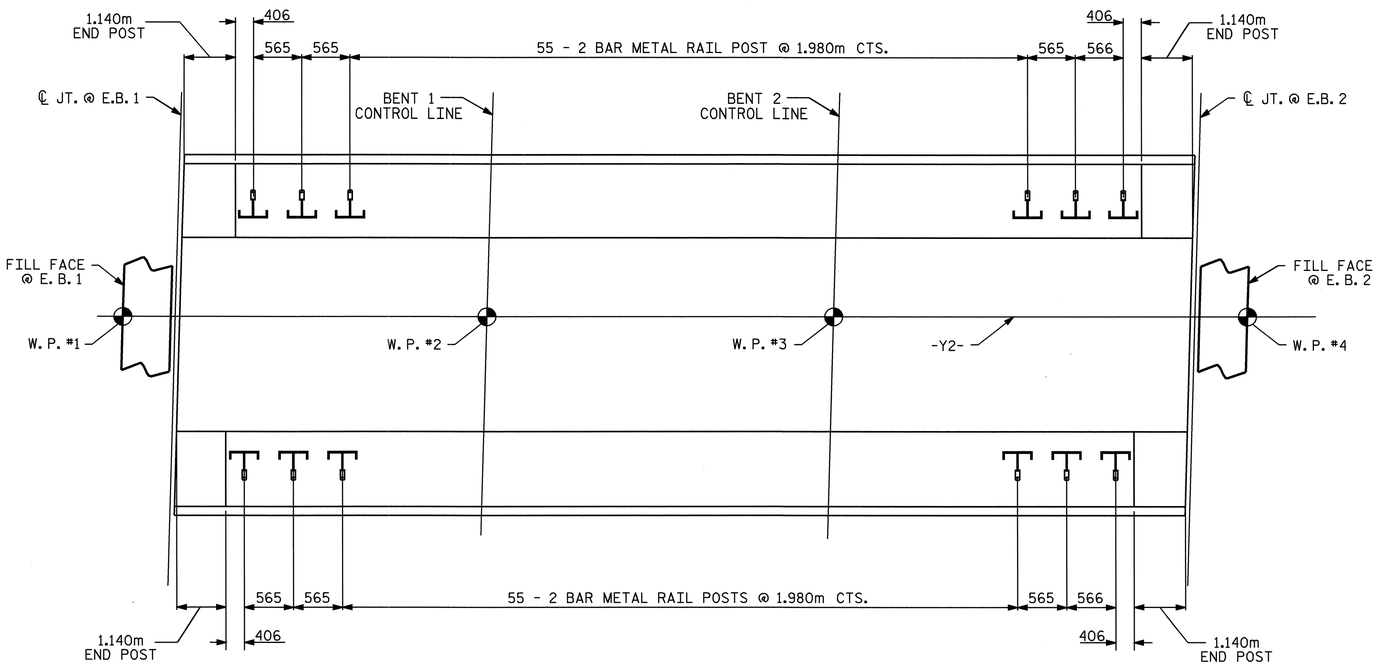

PLAN OF RAIL POST SPACINGS

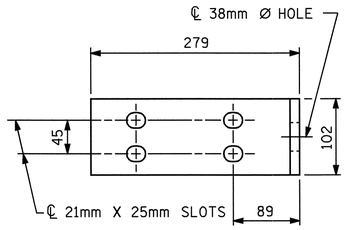

ELEVATION

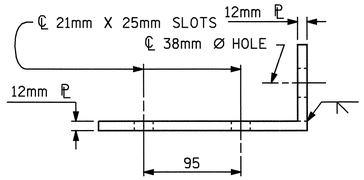

TOP VIEW

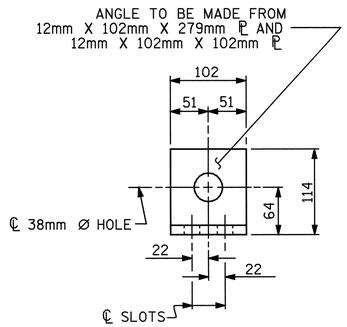

END VIEW

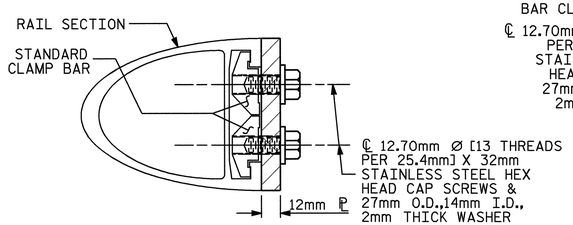

SECTION H-H

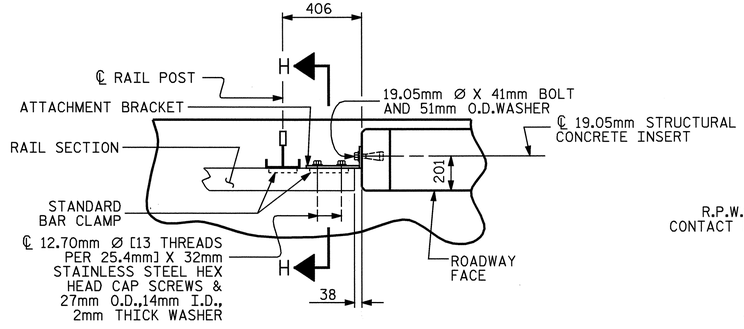

PLAN - RAIL AND END POST

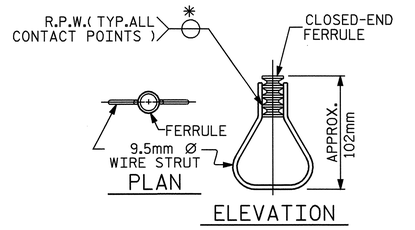

STRUCTURAL CONCRETE INSERT

*EACH WELDED ATTACHMENT OF WIRE TO FERRULE SHALL DEVELOP THE TENSILE STRENGTH OF THE WIRE.

NOTES

STRUCTURAL CONCRETE INSERT

THE STRUCTURAL CONCRETE INSERT ASSEMBLY SHALL CONSIST OF THE FOLLOWING COMPONENTS:

A. FERRULES SHALL BE MADE FROM STEEL MEETING THE REQUIREMENTS OF AASHTO M169, GRADE 12L14 AND SHALL HAVE A MINIMUM LENGTH OF THREADS OF 38mm.

B. 1 - 19.05mm Ø X 41mm BOLT WITH WASHER. BOLT SHALL CONFORM TO THE REQUIREMENTS OF ASTM A307. BOLT AND WASHER SHALL BE GALVANIZED. (AT THE CONTRACTOR'S OPTION, STAINLESS STEEL BOLT AND WASHER MAY BE USED AS AN ALTERNATE FOR THE 19.05mm Ø X 41mm GALVANIZED BOLT AND WASHER. THEY SHALL CONFORM TO OR EXCEED THE MECHANICAL REQUIREMENTS OF ASTM A307. THE USE OF THIS ALTERNATE SHALL BE APPROVED BY THE ENGINEER.)

C. WIRE STRUT SHOWN IN THE CONCRETE INSERT ASSEMBLY DETAIL IS THE MINIMUM ALLOWABLE SIZE AND SHALL HAVE A MINIMUM TENSILE STRENGTH OF 689 MPa. AS AN OPTION, A 11mm Ø WIRE STRUT WITH A MINIMUM TENSILE STRENGTH OF 620 MPa. IS ACCEPTABLE.

NOTES

METAL RAIL TO END POST CONNECTION

THE METAL RAIL TO END POST CONNECTION SHALL CONSIST OF THE FOLLOWING COMPONENTS :

A. 12mm PLATES SHALL CONFORM TO AASHTO M270 GRADE 250 AND SHALL BE GALVANIZED AFTER FABRICATION.

B. 19.05mm STRUCTURAL CONCRETE INSERT SHALL HAVE A WORKING LOAD SHEAR CAPACITY OF 21.4 kN. THE FERRULES SHALL ENGAGE A 19.05mm Ø X 41mm BOLT WITH 51mm O.D. WASHER IN PLACE. THE 19.05mm Ø X 41mm BOLT SHALL HAVE N. C. THREADS.

C. CAP SCREWS FOR RAIL ATTACHMENT TO ANGLE SHALL CONFORM TO THE REQUIREMENTS OF ASTM F593 ALLOY 305 STAINLESS STEEL. CAP SCREWS TO BE CENTERED IN SLOTS AT 16°C.

D. STANDARD CLAMP BARS (SEE METAL RAIL SHEET).

THE COST OF THE STANDARD CLAMP BARS AND CAP SCREWS USED IN THE METAL RAIL TO END POST CONNECTION SHALL BE INCLUDED IN THE UNIT CONTRACT PRICE BID FOR METERS OF 2 BAR METAL RAILS.

THE 19.05mm STRUCTURAL CONCRETE INSERT WITH BOLT SHALL BE ASSEMBLED IN THE SHOP.

THE COST OF THE 19.05mm STRUCTURAL CONCRETE INSERT ASSEMBLY, AND THE 12mm PLATES COMPLETE IN PLACE SHALL BE INCLUDED IN THE VARIOUS PAY ITEMS.

THE CONTRACTOR, AT HIS OPTION, MAY USE AN ADHESIVE BONDING SYSTEM IN LIEU OF THE STRUCTURAL CONCRETE INSERT EMBEDDED IN THE END POST. IF THE ADHESIVE BONDING SYSTEM IS USED, THE 19.05mm Ø X 41mm BOLT WITH WASHER SHALL BE REPLACED WITH A 19.05mm Ø X 165mm BOLT AND 51mm O.D. WASHER. ALL SPECIFICATIONS THAT APPLY TO THE 19.05mm Ø X 41mm BOLT SHALL APPLY TO THE 19.05mm Ø X 165mm BOLT. SEE SPECIAL PROVISIONS FOR "ADHESIVELY ANCHORED ANCHOR BOLTS OR DOWELS". FIELD TESTING OF THE ADHESIVE BONDING SYSTEM IS NOT REQUIRED.

NORTH CAROLINA PROFESSIONAL SEAL 23926 ENGINEER BRIAN C. HANKINS
3/22/06

PROJECT NO. R-0609IA
GUILFORD COUNTY
STATION: 28+77.454 -L-

STATE OF NORTH CAROLINA
DEPARTMENT OF TRANSPORTATION
RALEIGH

RAIL POST SPACINGS AND END OF RAIL DETAILS

REVISIONS						SHEET NO.
NO.	BY:	DATE:	NO.	BY:	DATE:	S-56
1			3			TOTAL SHEETS
2			4			321

DETAILS FOR ATTACHING METAL RAIL TO END POST

ASSEMBLED BY : D. G. ELY		DATE :10/25/04
CHECKED BY : R. W. WRIGHT		DATE :2/05
DRAWN BY : WJH 3/89	REV. 8/16/99	RWW/LES
CHECKED BY : CRK 3/89	REV. 10/17/00	LES/RDR
	REV. 5/7/03	RWW/JTE

15-MAY-2006 10:32
J:\STRUCT~1\frye\FINAL_~1\Str2\R-0609IA_SD_MR_02.dgn
rwwright

STD. NO.BMR2SM

STR. #2

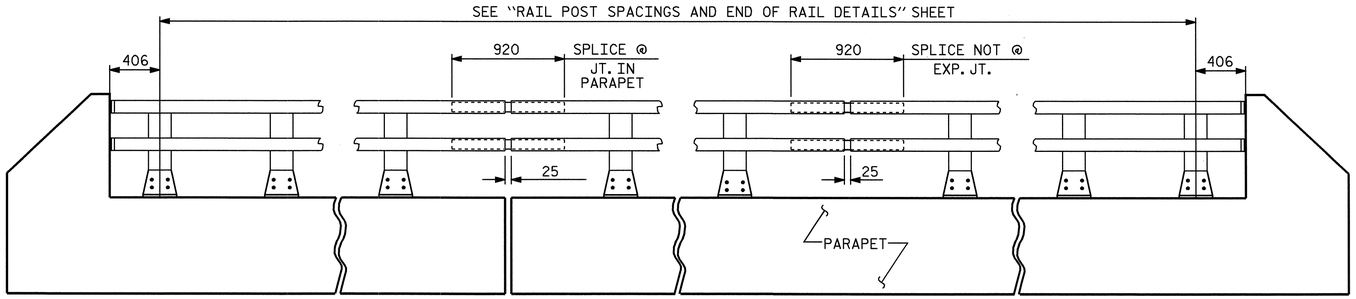

ELEVATION

NOTE: FOR ATTACHMENT OF METAL RAIL TO END POST, SEE STANDARD No. BMR2SM

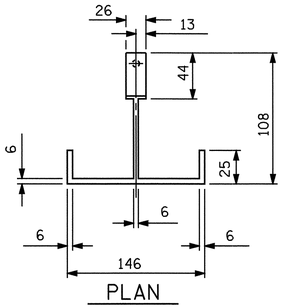

PLAN

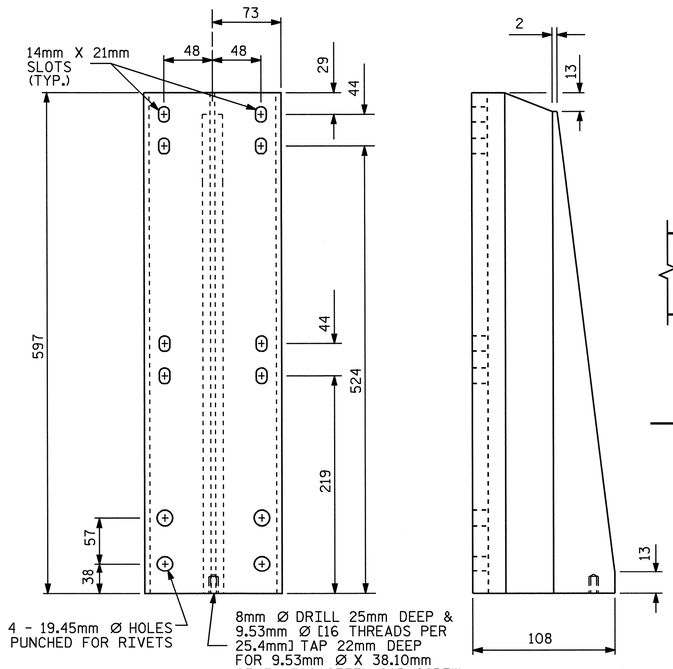

FRONT ELEVATION SIDE ELEVATION

DETAILS OF POST

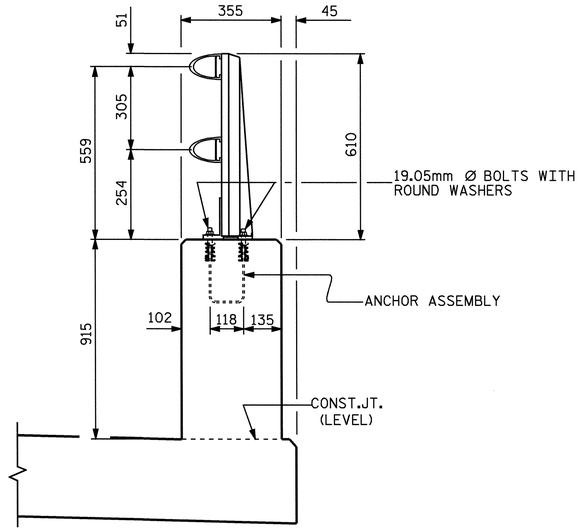

SECTION THRU PARAPET AND RAIL

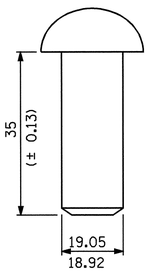

RIVET DETAIL

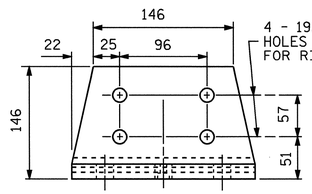

FRONT ELEVATION

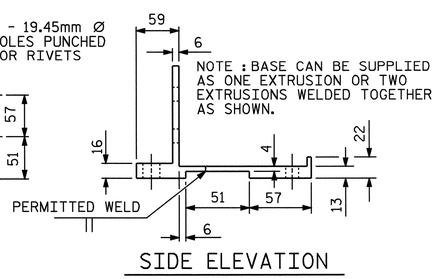

SIDE ELEVATION

POST BASE DETAILS

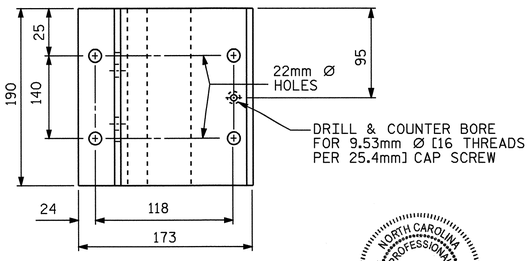

PLAN

NOTES

AT THE CONTRACTOR'S OPTION, METAL RAIL MAY BE EITHER ALUMINUM OR GALVANIZED STEEL IN ACCORDANCE WITH THE REQUIREMENTS OF THE GENERAL NOTES AND THE FOLLOWING SPECIFICATIONS FOR THE ALTERNATE MATERIALS; HOWEVER, THE CONTRACTOR WILL BE REQUIRED TO USE THE SAME RAIL MATERIAL ON ALL STRUCTURES ON THE PROJECT FOR WHICH METAL RAIL IS DESIGNATED.

ALUMINUM RAILS

MATERIAL FOR POSTS, BASES AND RAILS, EXPANSION BARS AND CLAMP BARS SHALL BE ASTM B221 ALLOY 6061-T6.

MATERIAL FOR RIVETS SHALL BE ASTM B316 ALLOY 6061-T6. RIVETS SHALL BE STANDARD BUTTON HEAD AND CONE POINT COLD DRIVEN AS PER DRAWING.

THE BASE OF RAIL POSTS, OR ANY OTHER ALUMINUM SURFACE IN CONTACT WITH CONCRETE SHALL BE THOROUGHLY COATED WITH AN ALUMINUM IMPREGNATED CAULKING COMPOUND OF APPROVED QUALITY.

MATERIAL FOR SHIMS TO BE ASTM B209 ALLOY 6061-T6.

GALVANIZED STEEL RAILS

MATERIAL AND GALVANIZING ARE TO CONFORM TO THE FOLLOWING SPECIFICATIONS:

POST, POST BASES, RAILS, EXPANSION BARS AND CLAMP BARS: AASHTO M270 GRADE 250 STRUCTURAL STEEL - GALVANIZED TO AASHTO M111.

RIVETS: RIVETS SHALL MEET THE REQUIREMENTS OF ASTM A502 FOR GRADE 1 RIVETS.

THE CUT ENDS OF GALVANIZED STEEL RAILING, AFTER GRINDING SMOOTH SHALL BE GIVEN TWO COATS OF ZINC RICH PAINT MEETING THE REQUIREMENTS OF FEDERAL SPECIFICATION MIL-P-26915 USAF TYPE 1, OR OF FEDERAL SPECIFICATIONS TT-P-641.

SHIMS: SHIMS SHALL MEET THE REQUIREMENTS OF ASTM A570M FOR GRADE 230 OR A611 FOR GRADE C AND SHALL BE GALVANIZED IN ACCORDANCE WITH AASHTO M111.

RAIL CAPS: RAIL CAPS SHALL MEET THE REQUIREMENTS OF ASTM A570M FOR GRADE 230 OR A611 FOR GRADE C AND SHALL BE GALVANIZED IN ACCORDANCE WITH AASHTO M111.

GENERAL NOTES

RAILING SHALL BE CONTINUOUS FROM END POST TO END POST OF BRIDGE. EACH JOINT IN RAIL LENGTH SHALL BE SPLICED AS DETAILED. PANEL LENGTHS OF RAIL SHALL BE ATTACHED TO A MINIMUM OF THREE POSTS.

FOR END OF RAIL TO CLEAR FACE OF CONCRETE END POST DIMENSION, SEE STANDARD NO. BMR2SM.

CAP SCREWS SHALL BE ASTM F593 ALLOY 305 STAINLESS STEEL. WASHERS SHALL MEET THE REQUIREMENTS OF ASTM F844 EXCEPT THEY SHALL BE MADE FROM ALLOY 304 STAINLESS STEEL.

CERTIFIED MILL REPORTS ARE REQUIRED FOR RAILS AND POSTS. SHOP INSPECTION IS NOT REQUIRED.

METAL RAIL POSTS SHALL BE SET NORMAL TO CURB GRADE.

METHOD OF MEASUREMENT FOR METAL RAILS: FOR LENGTH OF METAL RAILS TO BE PAID FOR, SEE THE STANDARD SPECIFICATIONS.

CURVED RAIL USAGE: WHERE RAILS ARE TO BE USED ON BRIDGES ON HORIZONTAL AND/OR VERTICAL CURVATURE THE CONTRACTOR MAY, AT HIS OPTION, HAVE THE REQUIRED CURVATURE IN THE RAIL FORMED IN THE SHOP OR IN THE FIELD. IN EITHER EVENT, THE RAIL SHALL CONFORM WITHOUT BUCKLING OR KINKING TO THE REQUIRED CURVATURE IN A UNIFORM MANNER ACCEPTABLE TO THE ENGINEER.

TO INSURE FUTURE IDENTIFICATION OF THE FABRICATOR, A PERMANENT IDENTIFYING MARK SHALL BE PLACED ON EACH POST. THE METHOD OF MARKING AND LOCATION SHALL BE SUCH THAT IT DOES NOT DETRACT FROM THE APPEARANCE OF THE POST, BUT REMAINS VISIBLE AFTER RAIL PLACEMENT.

SHIMS SHALL BE USED AS NECESSARY FOR POST ALIGNMENT.

ALLOY 6351-T5 MAY BE SUBSTITUTED FOR ALLOY 6061-T6 WHERE APPLICABLE.

MINOR VARIATIONS IN DETAILS OF METAL RAIL WILL BE CONSIDERED. DETAILS OF SUCH VARIATIONS, IF DESIRED, SHALL BE SUBMITTED FOR APPROVAL.

PAY LENGTH = 219.992 METERS

PROJECT NO. R-0609IA

GUILFORD COUNTY

STATION: 28+77.454 -L-

SHEET 1 OF 2

STATE OF NORTH CAROLINA
DEPARTMENT OF TRANSPORTATION
RALEIGH

STANDARD

2 BAR METAL RAIL

REVISIONS						SHEET NO.
NO.	BY:	DATE:	NO.	BY:	DATE:	S-57
1			3			TOTAL SHEETS
2			4			321

NORTH CAROLINA PROFESSIONAL SEAL 23926 ENGINEER BRIAN C. HANKS
5/22/06

ASSEMBLED BY : D. G. ELY	DATE : 10/25/04	REV. 8/16/99	RWW/LES
CHECKED BY : R. W. WRIGHT	DATE : 2/05	REV. 10/17/00	LES/RDR
DRAWN BY : EEM 6/94		REV. 5/7/03	RWW/JTE
CHECKED BY : RGW 6/94			

15-MAY-2006 10:32
J:\STRUCT~1\frye\FINAL_~1\Str2\R-0609IA_SD_MR_02.dgn
rwwright

STD. NO. BMR3SM

STR. #2

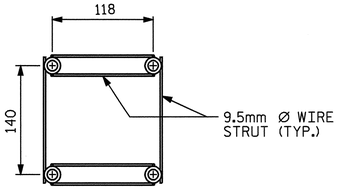

PLAN

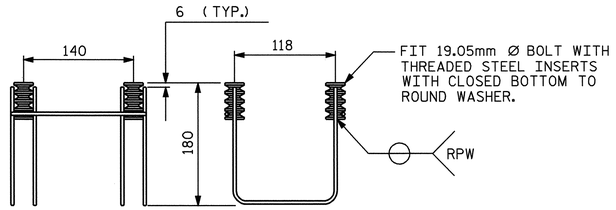

SIDE VIEW ELEVATION

MINIMUM LENGTH OF THREADS IN INSERT (FERRULE) : 44mm

4-BOLT METAL RAIL ANCHOR ASSEMBLY

(118 ASSEMBLIES REQUIRED)

NOTES

STRUCTURAL CONCRETE ANCHOR ASSEMBLY

THE STRUCTURAL CONCRETE ANCHOR ASSEMBLY SHALL CONSIST OF THE FOLLOWING COMPONENTS:

A. FERRULES SHALL BE MADE FROM STEEL MEETING THE REQUIREMENTS OF AASHTO M169, GRADE 12L14 AND SHALL HAVE A MINIMUM LENGTH OF THREADS OF 51mm FOR 19mm FERRULES.

B. 4 - 19.05mm Ø X 64mm BOLTS WITH WASHERS. BOLTS SHALL CONFORM TO THE REQUIREMENTS OF ASTM A307. BOLTS AND WASHERS SHALL BE GALVANIZED. AT THE CONTRACTOR'S OPTION, STAINLESS STEEL BOLTS AND WASHERS MAY BE USED AS AN ALTERNATE FOR THE 19.05mm Ø X 64mm GALVANIZED BOLTS AND WASHERS. THEY SHALL CONFORM TO OR EXCEED THE MECHANICAL REQUIREMENTS OF ASTM A307. THE USE OF THIS ALTERNATE SHALL BE APPROVED BY THE ENGINEER.

C. WIRE STRUT SHOWN IN THE CONCRETE ANCHOR ASSEMBLY DETAIL IS THE MINIMUM ALLOWABLE SIZE AND SHALL HAVE A MINIMUM TENSILE STRENGTH OF 689 MPa. AS AN OPTION, A 11mm Ø WIRE STRUT WITH A TENSILE STRENGTH OF 620 MPa. IS ACCEPTABLE.

D. THE METAL RAIL ANCHOR ASSEMBLIES TO BE HOT DIPPED GALVANIZED TO CONFORM TO REQUIREMENTS OF AASHTO M111.

E. THE COST OF THE METAL RAIL ANCHOR ASSEMBLY WITH BOLTS AND WASHERS COMPLETE IN PLACE SHALL BE INCLUDED IN THE PRICE BID FOR METERS OF METAL RAIL.

F. BOLTS TO BE TIGHTENED ONE-HALF TURN WITH A WRENCH FROM A FINGER-TIGHT POSITION.

THE CONTRACTOR, AT HIS OPTION, MAY USE ADHESIVELY ANCHORED ANCHOR BOLTS IN PLACE OF THE METAL ANCHOR ASSEMBLY. THE YIELD LOAD OF THE 19.05mm Ø BOLT IS 44.5 kN. FIELD TESTING OF THE ADHESIVE BONDING SYSTEM IS REQUIRED. SEE SPECIAL PROVISIONS FOR "ADHESIVELY ANCHORED ANCHOR BOLTS OR DOWELS".

WHEN ADHESIVELY ANCHORED ANCHOR BOLTS ARE USED, BOLTS SHALL MEET THE REQUIREMENTS OF ASTM F593 ALLOY 304 STAINLESS STEEL WITH MINIMUM 517 MPa ULTIMATE STRENGTH. NUTS SHALL MEET THE REQUIREMENTS OF ASTM F594 ALLOY 304 STAINLESS STEEL AND WASHERS SHALL MEET THE REQUIREMENTS OF ASTM F844 EXCEPT THEY SHALL BE MADE FROM ALLOY 304 STAINLESS STEEL.

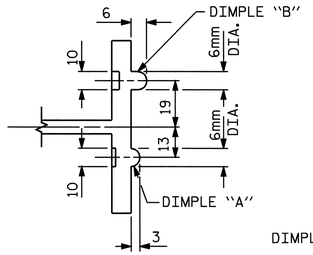

SECTION B - B

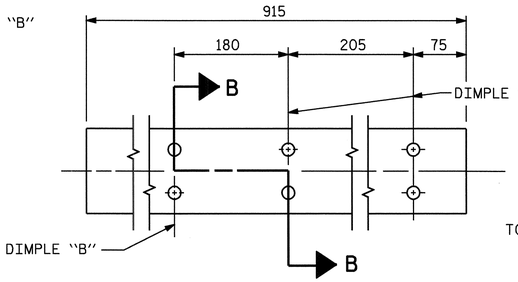

BAR SECTION

EXPANSION BAR DETAILS

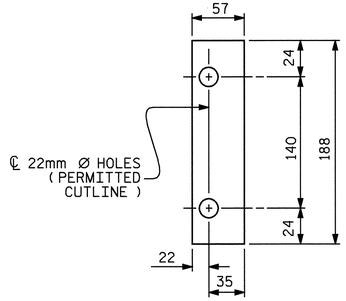

FRONT PLATE

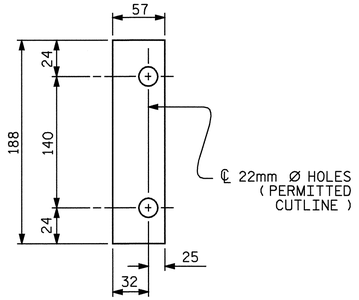

REAR PLATE

SHIM DETAILS

NOTE :
SHIMS MAY BE CUT ALONG PERMITTED CUTLINE OR SLOTTED TO EDGE OF PLATE TO FACILITATE PLACEMENT.

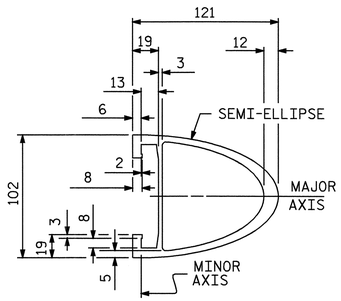

RAIL SECTION

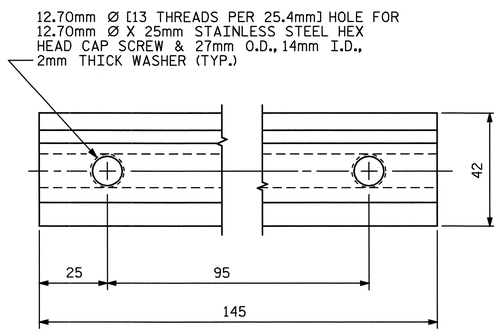

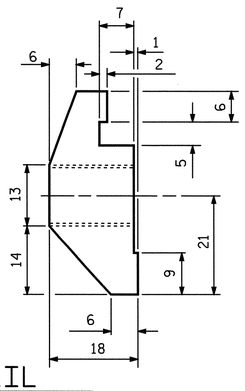

CLAMP BAR DETAIL

(4 REQUIRED PER POST)

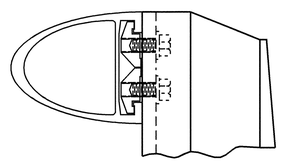

CLAMP ASSEMBLY

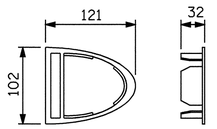

RAIL CAP

PROJECT NO. R-0609IA

GUILFORD COUNTY

STATION: 28+77.454 -L-

SHEET 2 OF 2

STATE OF NORTH CAROLINA
DEPARTMENT OF TRANSPORTATION
RALEIGH

STANDARD

2 BAR METAL RAIL

NORTH CAROLINA PROFESSIONAL SEAL 23926 ENGINEER BRIAN C. HANKS
5/22/06

ASSEMBLED BY : D. G. ELY	DATE : 10/25/04
CHECKED BY : R. W. WRIGHT	DATE : 2/05

DRAWN BY : EEM 6/94	REV. 8/16/99 RAL/LES
CHECKED BY : RGW 6/94	REV. 10/17/00 LES/RDR
	REV. 5/7/03 RWW/JTE

REVISIONS						SHEET NO.
NO.	BY:	DATE:	NO.	BY:	DATE:	S-58
1			3			TOTAL SHEETS
2			4			321

15-MAY-2006 10:33
J:\STRUCT~1\frye\FINAL_~1\Str2\R-0609IA_SD_MR_02.dgn
rwwright

STD. NO. BMR4SM

STR. #2

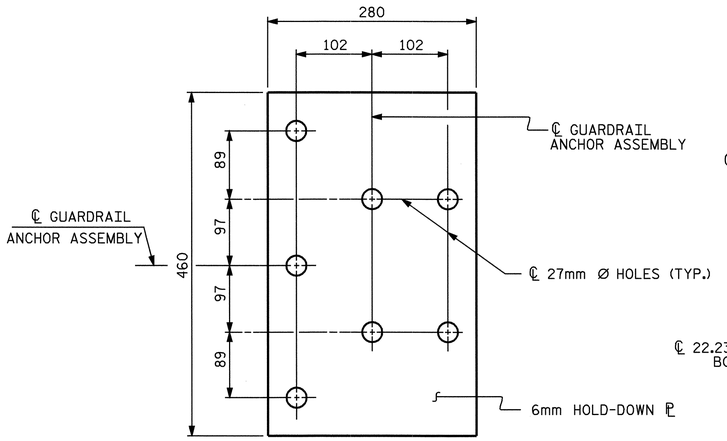

PLAN

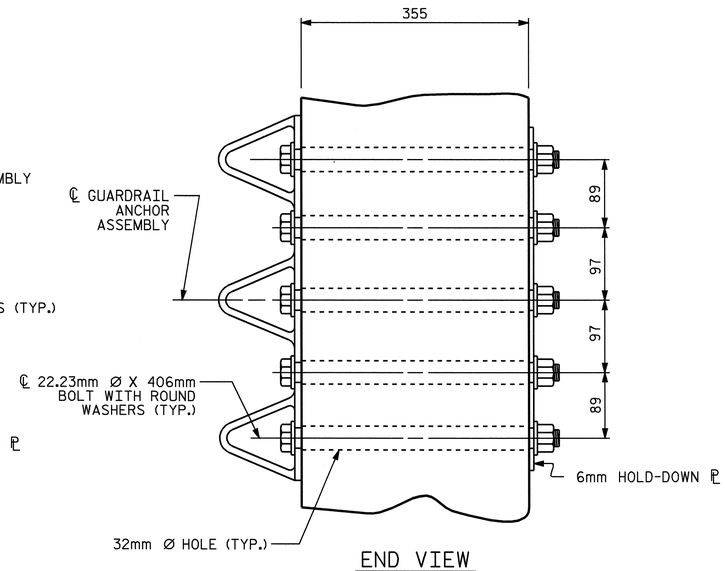

END VIEW

GUARDRAIL ANCHOR ASSEMBLY DETAILS

NOTES

THE GUARDRAIL ANCHOR ASSEMBLY SHALL CONSIST OF A 6mm HOLD DOWN PLATE AND 7 - 22.23mm Ø BOLTS WITH NUTS AND WASHERS.

THE HOLD-DOWN PLATE SHALL CONFORM TO AASHTO M270 GRADE 250. AFTER FABRICATION, THE HOLD-DOWN PLATE SHALL BE HOT-DIP GALVANIZED IN ACCORDANCE WITH AASHTO M111.

BOLTS SHALL CONFORM TO THE REQUIREMENTS OF ASTM A307 AND NUTS SHALL CONFORM TO THE REQUIREMENTS OF AASHTO M291M. BOLTS, NUTS AND WASHERS SHALL BE GALVANIZED. AT THE CONTRACTOR'S OPTION, STAINLESS STEEL BOLTS, NUTS AND WASHERS MAY BE USED AS AN ALTERNATE FOR THE 22.23mm Ø GALVANIZED BOLTS, NUTS AND WASHERS. THEY SHALL CONFORM TO OR EXCEED THE MECHANICAL REQUIREMENTS OF ASTM A307. THE USE OF THIS ALTERNATE SHALL BE APPROVED BY THE ENGINEER.

AFTER INSTALLATION, THE EXPOSED THREAD OF THE BOLT SHALL BE BURRED WITH A SHARP POINTED TOOL.

THE COST OF THE GUARDRAIL ANCHOR ASSEMBLIES WITH BOLTS, NUTS AND WASHERS COMPLETE IN PLACE, SHALL BE INCLUDED IN THE VARIOUS PAY ITEMS.

THE VERTICAL REINFORCING BARS MAY BE SHIFTED SLIGHTLY IN THE END POST TO CLEAR ASSEMBLY BOLTS.

THE 32mm Ø HOLES SHALL BE FORMED OR DRILLED WITH A CORE BIT. IMPACT TOOLS WILL NOT BE PERMITTED. ANY CONCRETE DAMAGED BY THIS WORK SHALL BE REPAIRED TO THE SATISFACTION OF THE ENGINEER.

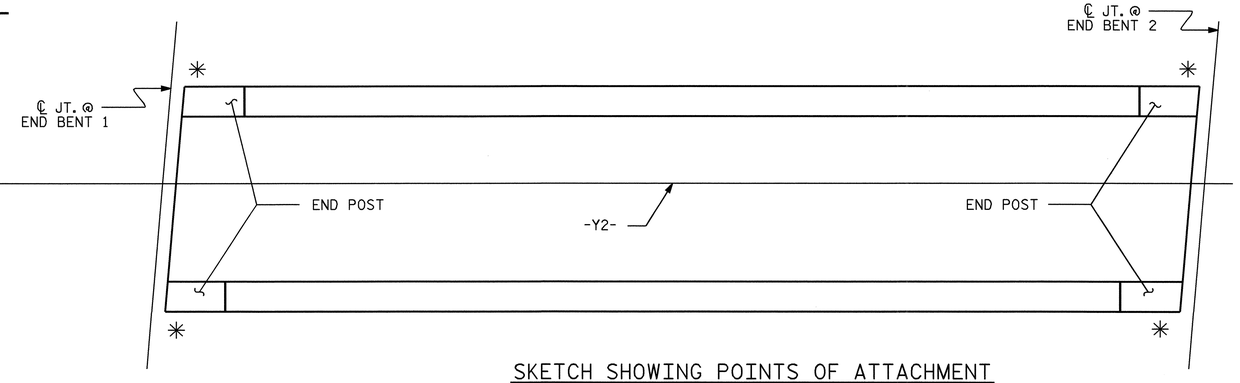

SKETCH SHOWING POINTS OF ATTACHMENT

✳LOCATION OF GUARDRAIL ATTACHMENT

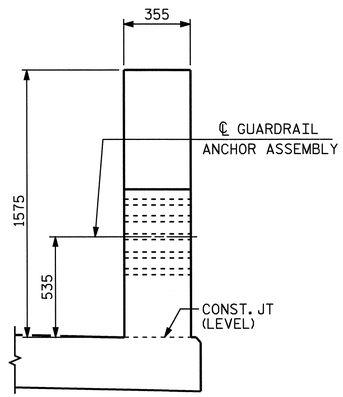

END VIEW
(TWO BAR METAL RAIL)

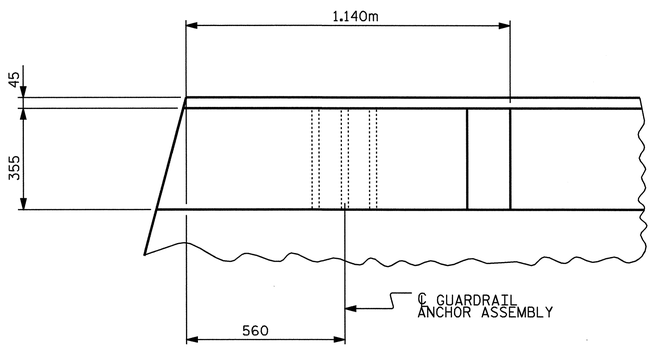

PLAN

LOCATION OF GUARDRAIL ANCHOR AT END POST

PROJECT NO. R-0609IA

GUILFORD COUNTY

STATION: 28+77.454 -L-

STATE OF NORTH CAROLINA
DEPARTMENT OF TRANSPORTATION
RALEIGH

STANDARD

GUARDRAIL ANCHORAGE DETAILS FOR METAL RAILS

ASSEMBLED BY : D. G. ELY	DATE : 10/25/04
CHECKED BY : R. W. WRIGHT	DATE : 2/05

DRAWN BY : EEM 6/94	REV. 8/16/99 RWW/LES
CHECKED BY : RGW 6/94	REV. 10/17/00 RWW/LES
	REV. 5/7/03 RWW/JTE

REVISIONS						SHEET NO.
NO.	BY:	DATE:	NO.	BY:	DATE:	S-59
1			3			TOTAL SHEETS
2			4			321

NORTH CAROLINA PROFESSIONAL SEAL 23926 ENGINEER BRIAN C. HANKS
5/22/06

STD. NO. BMR8SM

STR. #2

15-MAY-2006 10:53
J:\STRUCT~1\frye\FINAL_~1\Str2\R-0609IA_SD_MR_02.dgn
rwwright

GROOVING BRIDGE FLOORS		
APPROACH SLABS	85.7	SQ.METER
BRIDGE DECK	1074.9	SQ.METER
TOTAL	1160.6	SQ.METER

SUPERSTRUCTURE BILL OF MATERIAL

		CLASS AA CONCRETE	REINFORCING STEEL	EPOXY COATED REINFORCING STEEL
		(CU.METER)	(kg)	(kg)
SPANS A, B, & C	POUR 1	62.9	19589	22163
	POUR 2	116.6		
	POUR 3	161.3		
TOTALS **		340.8	19589	22163

** QUANTITIES FOR PARAPET & END POSTS ARE NOT INCLUDED

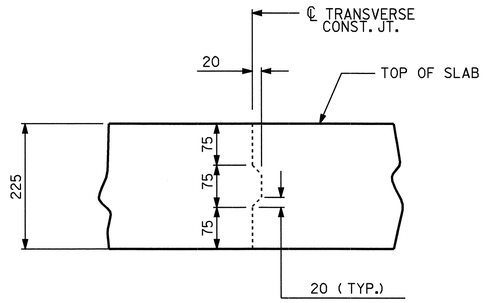

TRANSVERSE CONST. JT. DETAIL

NOTE: REINFORCING STEEL IN SLAB NOT SHOWN. LONGITUDINAL REINFORCING STEEL SHALL BE CONTINUOUS THRU JOINT.

SUPERSTRUCTURE REINFORCING STEEL LENGTHS ARE BASED ON THE FOLLOWING MINIMUM SPLICE LENGTHS

BAR SIZE	SUPERSTRUCTURE EXCEPT APPROACH SLABS, PARAPET, AND BARRIER RAIL		APPROACH SLABS		PARAPET AND BARRIER RAIL
	EPOXY COATED	UNCOATED	EPOXY COATED	UNCOATED	
#13	610	540	610	540	840
#16	770	660	770	660	1050
#19	920	790	1190	790	1330
#22	1580	1060			
#25	2080	1390			

BILL OF MATERIAL

SPAN A, B, AND C

BAR	NO.	SIZE	TYPE	LENGTH	WEIGHT
* A1	696	16	STR	11200	12098
A2	696	16	STR	11200	12098
* A101	2	16	STR	9380	29
* A102	2	16	STR	7560	23
* A103	2	16	STR	5720	18
* A104	2	16	STR	3900	12
* A105	2	16	STR	2060	6
A201	2	16	STR	9380	29
A202	2	16	STR	7560	23
A203	2	16	STR	5720	18
A204	2	16	STR	3900	12
A205	2	16	STR	2060	6
* B1	72	13	STR	8600	615
* B2	141	22	STR	8620	3697
* B3	48	13	STR	6480	309
* B4	141	22	STR	9780	4195
* B5	96	13	STR	7700	735
B6	287	16	STR	16620	7403
* B7	28	13	STR	8520	237
* G1	2	16	STR	11240	35
* K1	8	16	1	3200	40
* K2	8	16	2	4300	53
* S1	54	13	3	1140	61

REINFORCING STEEL 19589 kg

* EPOXY COATED REINFORCING STEEL 22163 kg

* THESE BARS ARE EPOXY COATED.

BAR TYPES

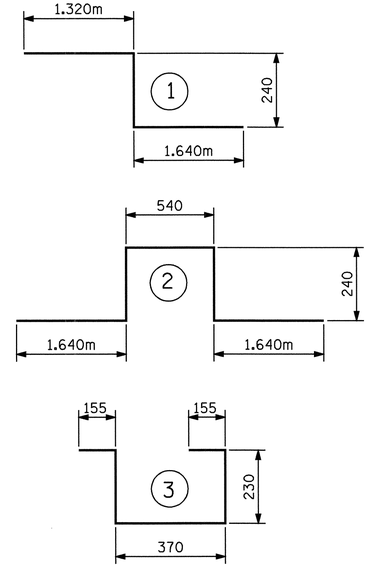

ALL BAR DIMENSIONS ARE OUT TO OUT

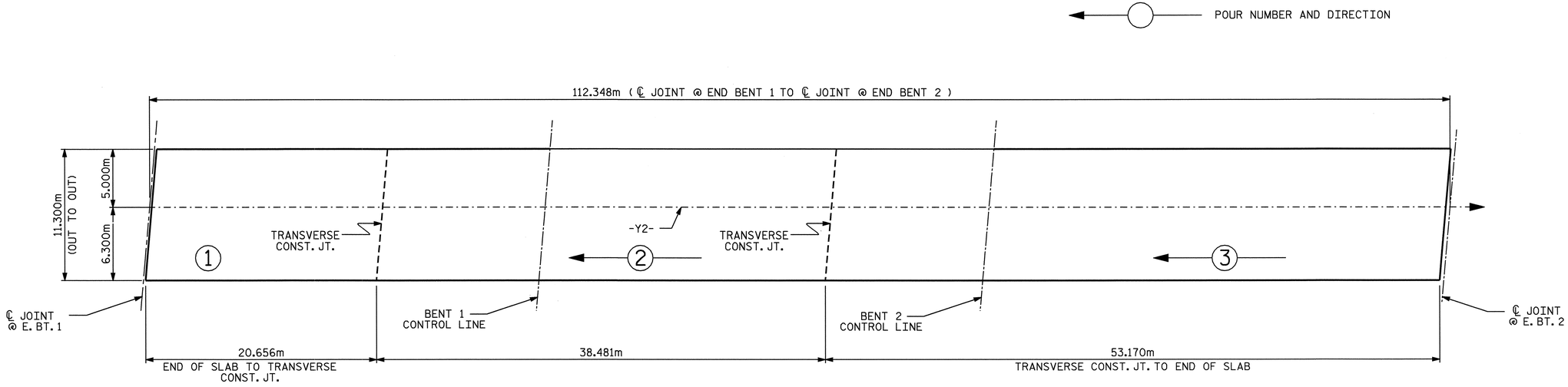

POUR SEQUENCE AND LAYOUT FOR COMPUTING AREA OF REINFORCED CONCRETE DECK SLAB (SQ. METER = 1269.5)

PROJECT NO. R-0609IA

GUILFORD COUNTY

STATION: 28+77.454 -L-

STATE OF NORTH CAROLINA
DEPARTMENT OF TRANSPORTATION
RALEIGH

STANDARD

SUPERSTRUCTURE BILL OF MATERIAL

NORTH CAROLINA PROFESSIONAL SEAL 23926 ENGINEER BRIAN C. HANKS 5/22/06

REVISIONS						SHEET NO.
NO.	BY:	DATE:	NO.	BY:	DATE:	S-60
1			3			TOTAL SHEETS
2			4			321

ASSEMBLED BY : D. G. ELY	DATE : 12/9/04
CHECKED BY : R. W. WRIGHT	DATE : 2/05
DRAWN BY : JMB 5/87	REV. 5/16/97 EEM/RGW
CHECKED BY : SJD 9/87	

15-MAY-2006 10:33
J:\STRUCT-1\frye\FINAL_~1\Str2\R-0609IA_sd_BM_02.dgn
rwwright

STD. NO. BOM1SM

STR. 2

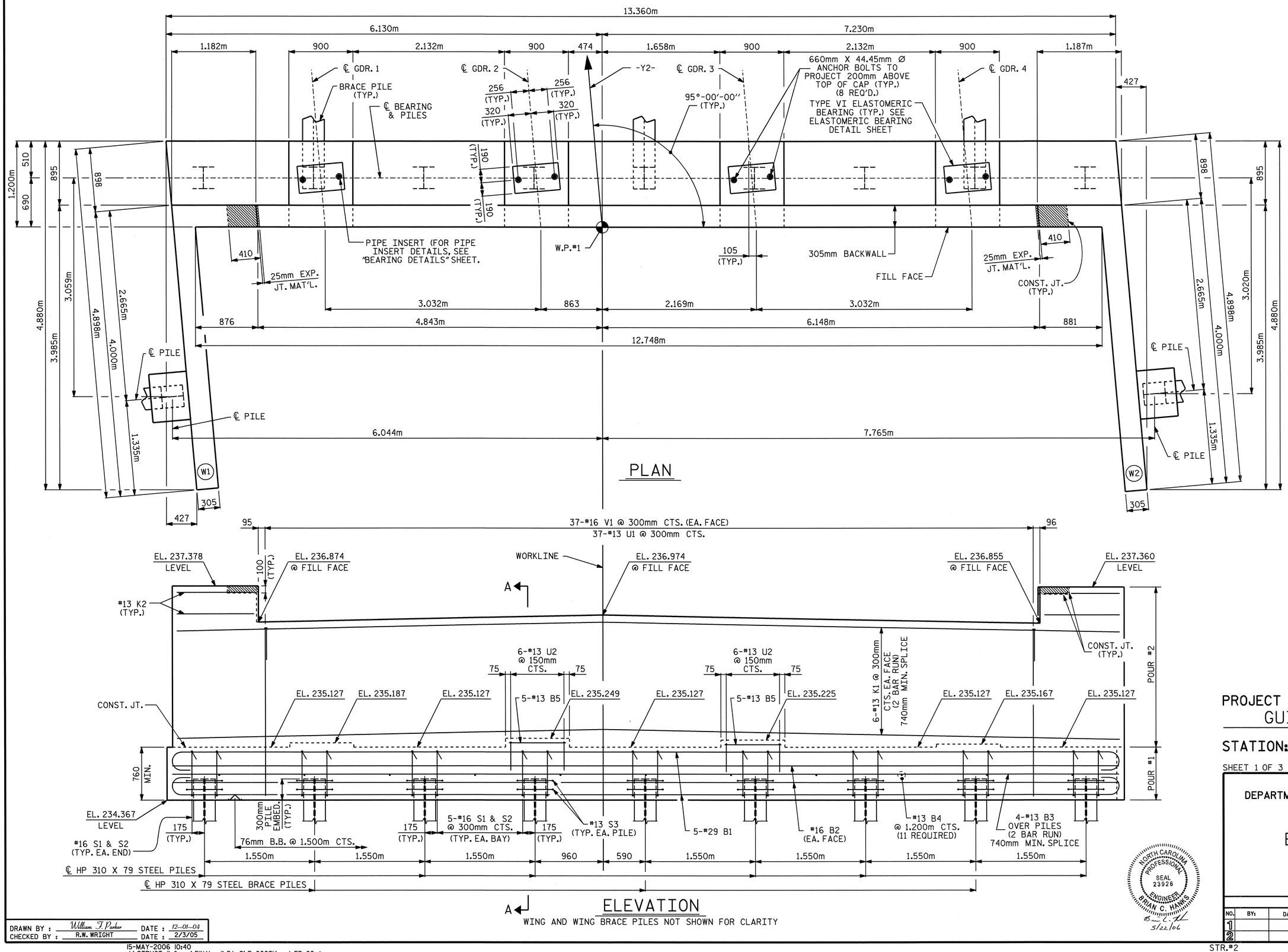

PROJECT NO. R-0609IA

GUILFORD COUNTY

STATION: 28+77.454 -L-

SHEET 1 OF 3

STATE OF NORTH CAROLINA
DEPARTMENT OF TRANSPORTATION
RALEIGH

SUBSTRUCTURE
END BENT 1

REVISIONS						SHEET NO.
NO.	BY:	DATE:	NO.	BY:	DATE:	S-61
1			3			TOTAL SHEETS
2			4			321

NORTH CAROLINA PROFESSIONAL SEAL 23926 ENGINEER BRIAN C. HANKS
5/22/06

DRAWN BY : William T. Parker DATE : 12-01-04
CHECKED BY : R.W. WRIGHT DATE : 2/3/05

15-MAY-2006 10:40
J:\STRUCT~1\frye\FINAL_~1\Str2\R-0609IA_sd_EB_02.dgn
rwwright

STR.#2

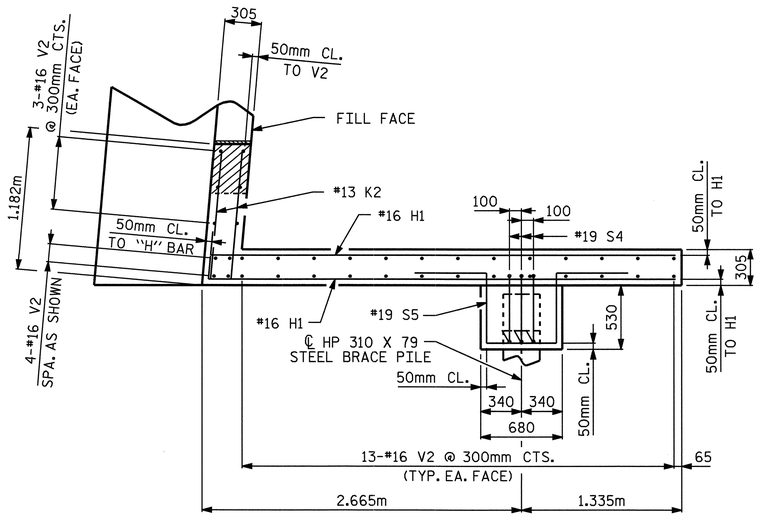

PLAN - W1

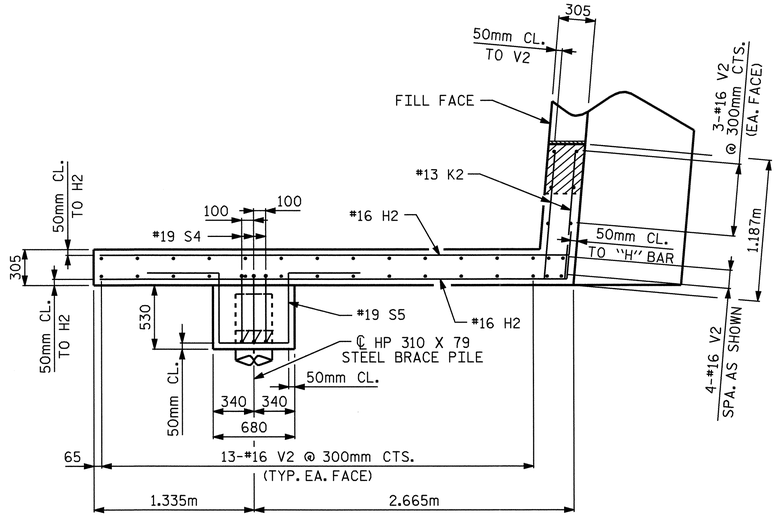

PLAN - W2

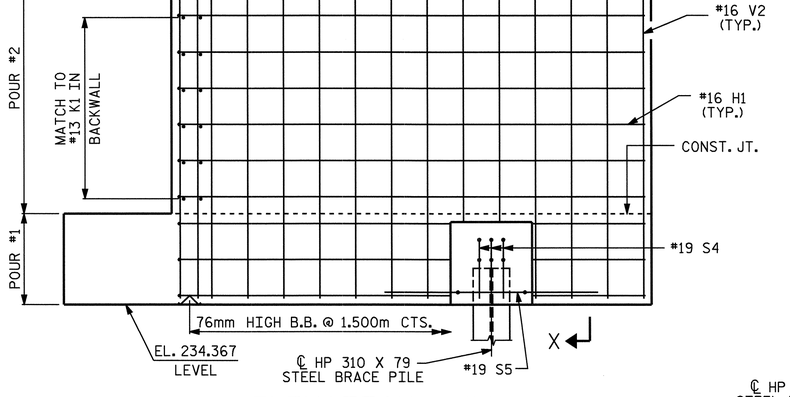

ELEVATION - W1

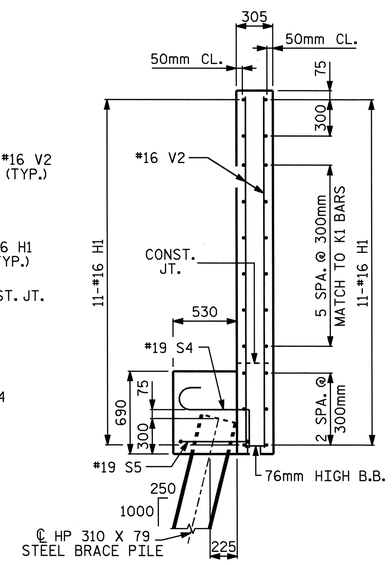

SECTION X-X

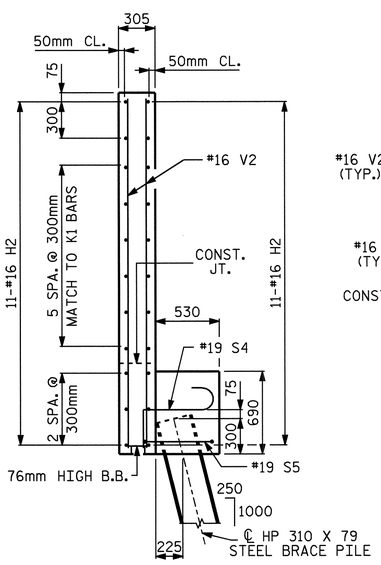

SECTION Y-Y

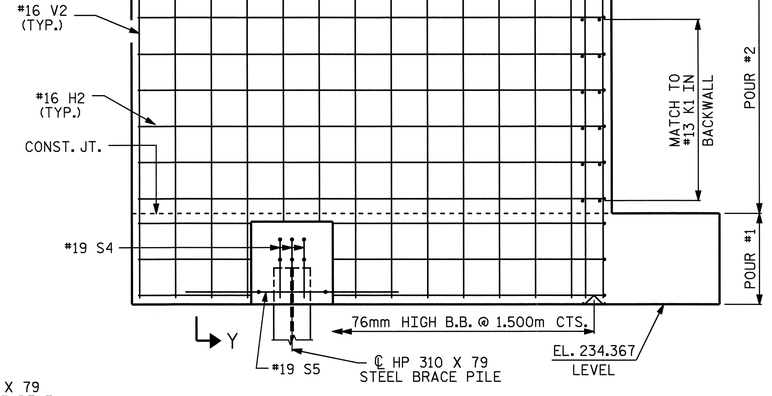

ELEVATION - W2

NOTES

STIRRUPS IN CAP MAY BE SHIFTED AS NECESSARY TO CLEAR ANCHOR BOLTS.

EPOXY COAT THE END BENT CAP AFTER ADJUSTMENTS ARE MADE TO BEARINGS AND ANCHOR BOLTS ARE GROUTED.

FOR EPOXY PROTECTIVE COATING, SEE SPECIAL PROVISIONS.

BACKWALL SHALL BE PLACED BEFORE APPLYING THE EPOXY PROTECTIVE COATING.

THE TOP SURFACE AREAS OF THE END BENT CAP SHALL BE CURED IN ACCORDANCE WITH THE STANDARD SPECIFICATIONS EXCEPT THE MEMBRANE CURING COMPOUND METHOD SHALL NOT BE USED.

THE TOP SURFACE OF THE CAP EXCEPT THE BRIDGE SEAT BUILDUPS SHALL BE SLOPED TRANSVERSELY FROM THE FILL FACE TO THE BACK FACE AT THE RATE OF 2 %.

THE CONTRACTOR SHALL PROVIDE FOR INSTALLATION OF THE 102mm DIAMETER DRAIN PIPE THROUGH THE WING WALL AS REQUIRED FOR REINFORCED BRIDGE APPROACH FILLS. SEE THE ROADWAY PLANS. REINFORCING STEEL IN THE WING WALL MAY BE SHIFTED AS NECESSARY TO CLEAR THE DRAIN PIPE.

THE CONCRETE IN THE SHADED AREA OF THE WING SHALL BE POURED AFTER THE JOINT BETWEEN THE DECK AND THE APPROACH SLAB HAS BEEN SAWED AND THE PARAPET AND END POST ARE CAST IF SLIP FORMING IS USED.

NORTH CAROLINA PROFESSIONAL SEAL 23926 ENGINEER BRIAN C. HANKS
5/22/06

PROJECT NO. R-0609IA
GUILFORD COUNTY
STATION: 28+77.454 -L-

SHEET 2 OF 3

STATE OF NORTH CAROLINA
DEPARTMENT OF TRANSPORTATION
RALEIGH

SUBSTRUCTURE
END BENT 1

REVISIONS						SHEET NO.
NO.	BY:	DATE:	NO.	BY:	DATE:	S-62
1			3			TOTAL SHEETS
2			4			321

DRAWN BY : William F Parker DATE : 12-01-04
CHECKED BY : R.W. WRIGHT DATE : 2/3/05

15-MAY-2006 10:40
J:\STRUCT~1\frye\FINAL_~1\Str2\R-0609IA_sd_EB_02.dgn
rwwright

STR.#2

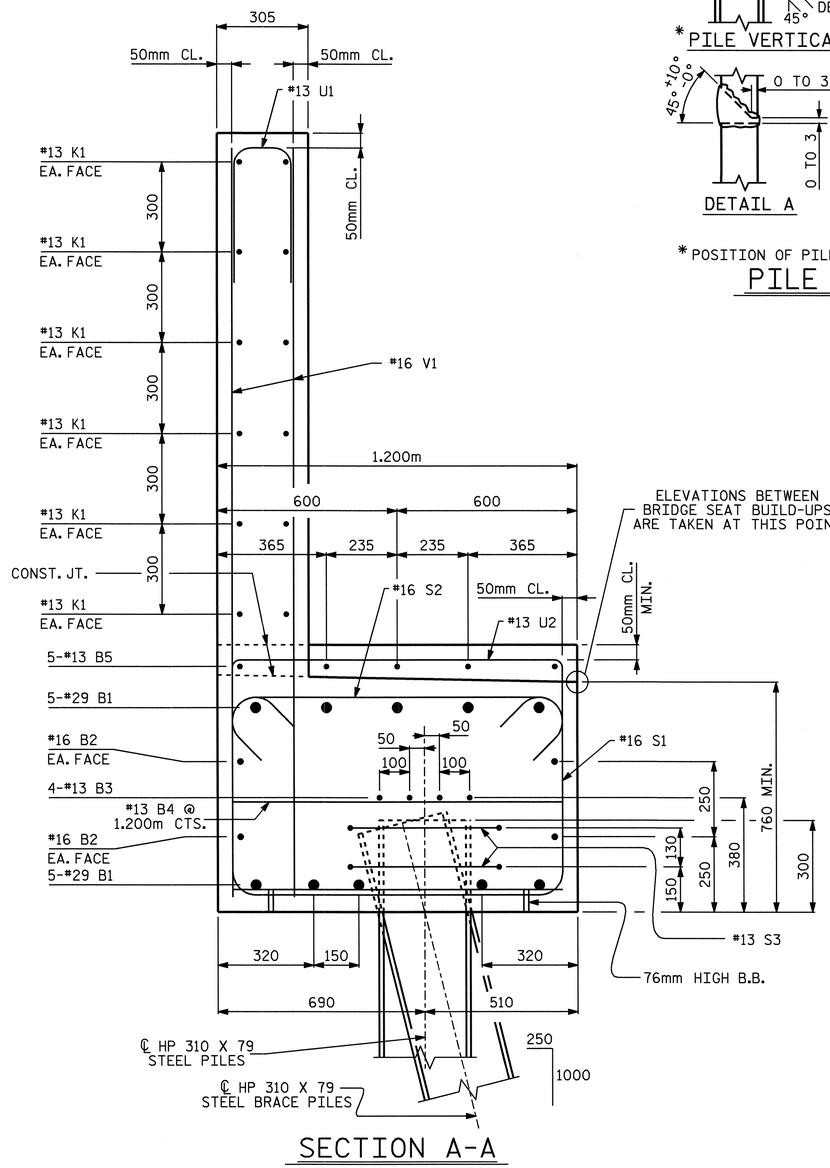

SECTION A-A

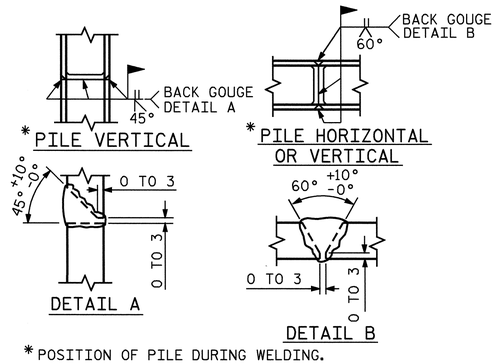

* POSITION OF PILE DURING WELDING.

PILE SPLICE DETAILS

BAR TYPES

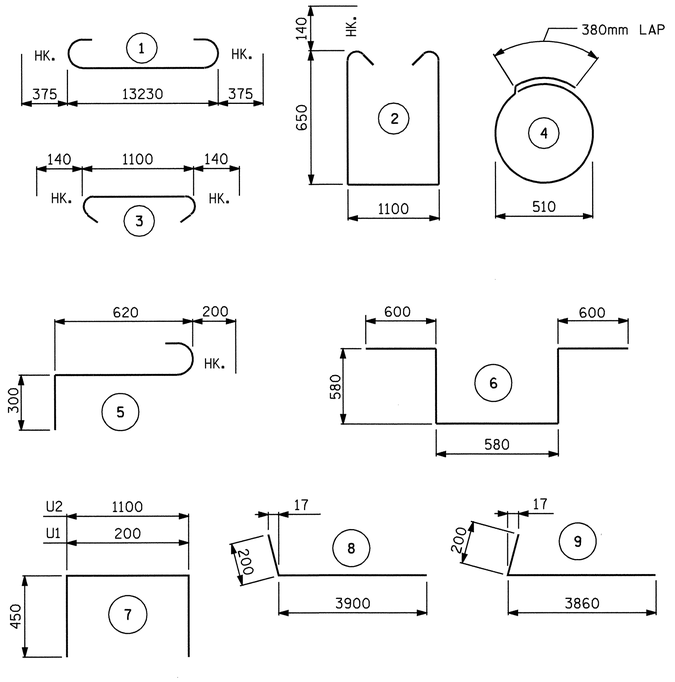

ALL BAR DIMENSIONS ARE OUT TO OUT.

BILL OF MATERIAL
END BENT 1

BAR	NO.	SIZE	TYPE	LENGTH	WEIGHT
B1	10	#29	1	13980	707
B2	4	#16	STR	13260	82
B3	8	#13	STR	7000	56
B4	11	#13	STR	1100	12
B5	10	#13	STR	800	8
H1	22	#16	9	4060	139
H2	22	#16	8	4100	140
K1	24	#13	STR	7000	167
K2	8	#13	STR	1080	9
S1	42	#16	2	2680	175
S2	42	#16	3	1380	90
S3	18	#13	4	1980	35
S4	6	#19	5	1120	15
S5	2	#19	6	2940	13
U1	37	#13	7	1100	40
U2	12	#13	7	2000	24
V1	74	#16	STR	2380	273
V2	72	#16	STR	2880	322

REINFORCING STEEL = 2307 kg

CLASS 'A' CONCRETE
POUR #1 : CAP & WINGS - 14.7 m3
POUR #2 : WINGS & BACKWALL - 12.5 m3
TOTAL CLASS 'A' CONCRETE - 27.2 m3

HP 310 X 79 STEEL PILES
NO. 11 METERS 44

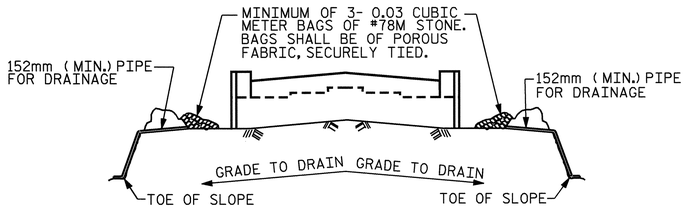

BAGGED STONE AND PIPE SHALL BE PLACED IMMEDIATELY AFTER COMPLETION OF END BENT EXCAVATION. PIPE MAY BE EITHER CONCRETE, CORRUGATED STEEL, CORRUGATED ALUMINUM ALLOY, OR CORRUGATED PLASTIC. PERFORATED PIPE WILL NOT BE ALLOWED.

BAGGED STONE SHALL REMAIN IN PLACE UNTIL THE ENGINEER DIRECTS THAT IT BE REMOVED. THE CONTRACTOR SHALL REMOVE AND DISPOSE OF SILT ACCUMULATIONS AT BAGGED STONE WHEN SO DIRECTED BY THE ENGINEER. BAGS SHALL BE REMOVED AND REPLACED WHENEVER THE ENGINEER DETERMINES THAT THEY HAVE DETERIORATED AND LOST THEIR EFFECTIVENESS.

NO SEPARATE PAYMENT WILL BE MADE FOR THIS WORK AND THE ENTIRE COST OF THIS WORK SHALL BE INCLUDED IN THE UNIT CONTRACT PRICE FOR THE SEVERAL PAY ITEMS.

TEMPORARY DRAINAGE AT END BENT

NORTH CAROLINA PROFESSIONAL SEAL 23926 ENGINEER BRIAN C. HANKS
5/22/06

PROJECT NO. R-0609IA
GUILFORD COUNTY
STATION: 28+77.454 -L-

SHEET 3 OF 3

STATE OF NORTH CAROLINA
DEPARTMENT OF TRANSPORTATION
RALEIGH

SUBSTRUCTURE
END BENT 1

REVISIONS						SHEET NO.
NO.	BY:	DATE:	NO.	BY:	DATE:	S-63
1			3			TOTAL SHEETS
2			4			321

DRAWN BY : William T. Parker DATE : 12-01-04
CHECKED BY : R.W. WRIGHT DATE : 2/3/05

15-MAY-2006 10:40
J:\STRUCT~1\frye\FINAL_~1\Str2\R-0609IA_sd_EB_02.dgn
rwwright

STR.#2

J:\STRUCTR\frye\FINAL_R\Str2\R-0609IA_sd_B*_02.dgn
rwwright

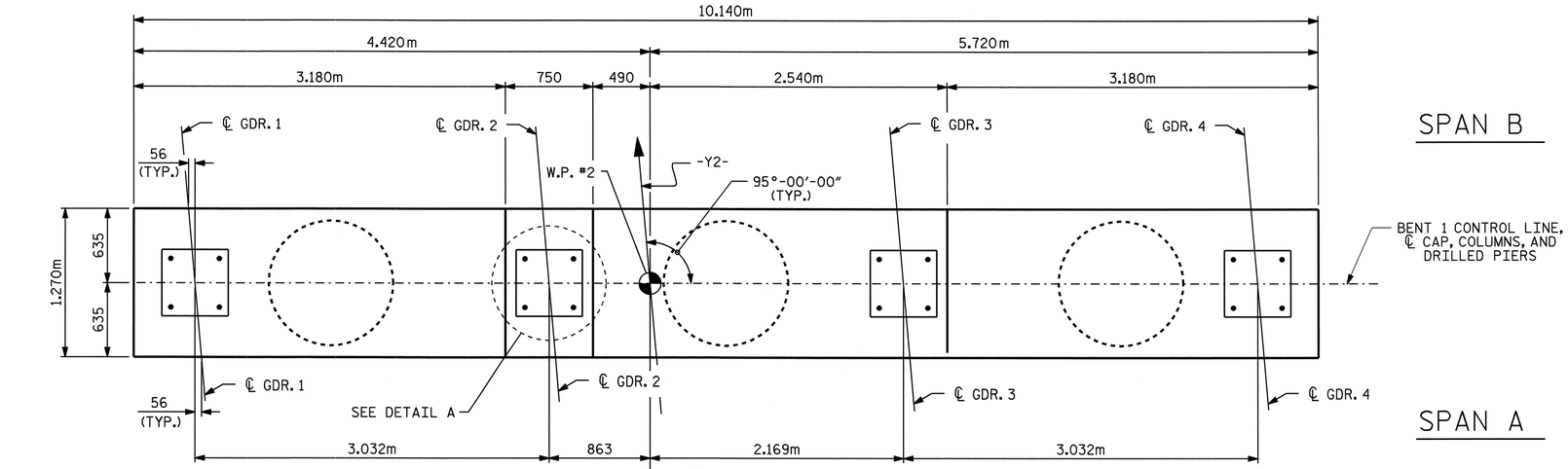

SPAN B

SPAN A

PLAN

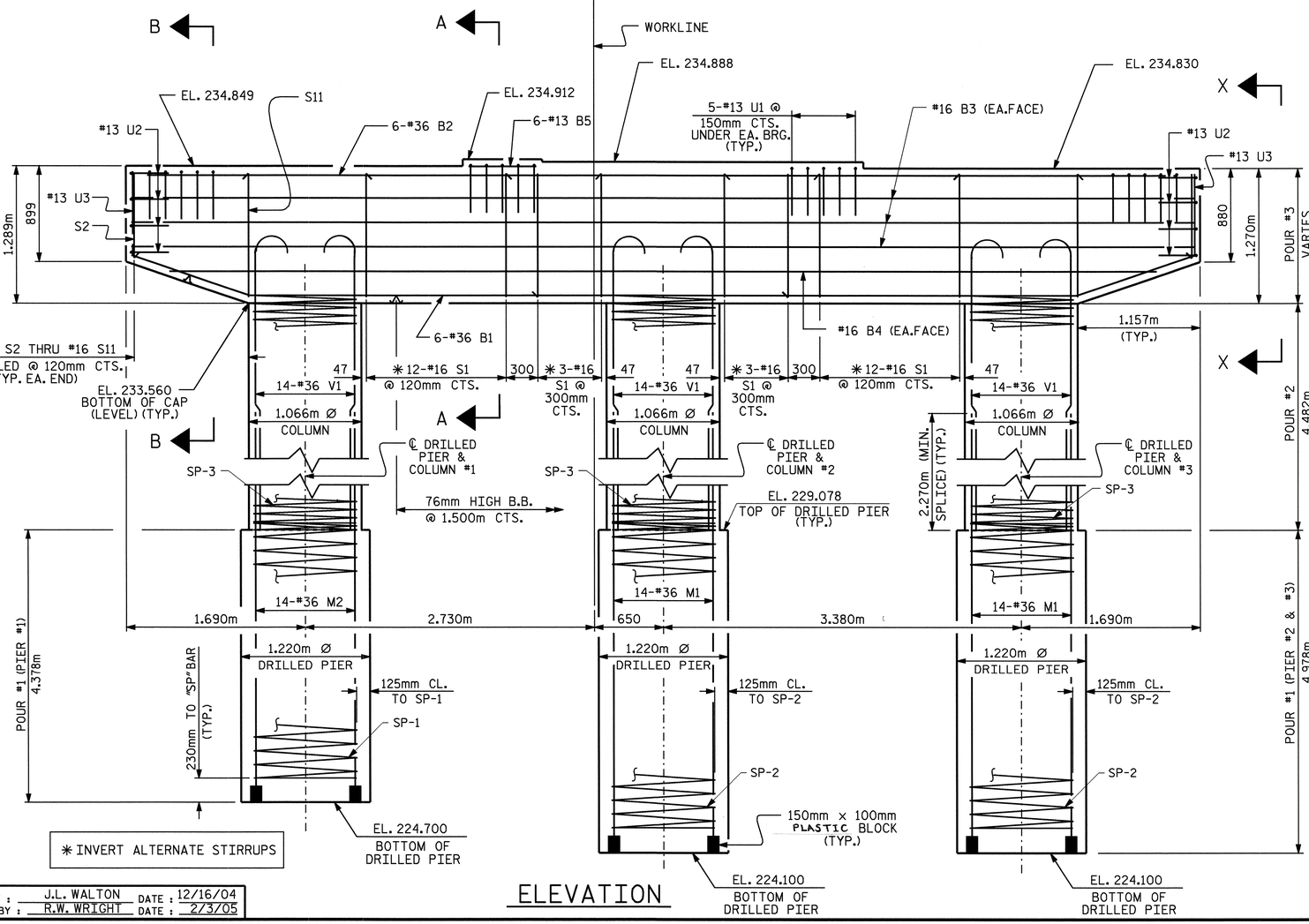

*INVERT ALTERNATE STIRRUPS

ELEVATION

NOTES

STIRRUPS IN CAP MAY BE SHIFTED AS NECESSARY TO CLEAR ANCHOR BOLTS.

HOOKS ON "V" BARS MAY BE TURNED AS NECESSARY FOR PLACING REINFORCING STEEL.

ALL STEEL IN THE DRILLED PIERS IS INCLUDED IN THE PAY ITEMS FOR "REINFORCING STEEL" AND "SPIRAL COLUMN REINFORCING STEEL".

THE CONTRACTOR'S ATTENTION IS CALLED TO THE FACT THAT THE LONGITUDINAL REINFORCEMENT FOR THE DRILLED PIERS IS DETAILED WITH ONE METER OF EXTRA LENGTH.

THE LOCATION OF THE CONSTRUCTION JOINT IN THE DRILLED PIERS IS BASED ON AN APPROXIMATE GROUND LINE ELEVATION. IF THE CONSTRUCTION JOINT IS ABOVE THE ACTUAL GROUND LINE ELEVATION, THE CONTRACTOR SHALL PLACE THE CONSTRUCTION JOINT 300mm BELOW THE GROUND LINE.

SPLICING OF THE LONGITUDINAL BARS IN THE DRILLED PIER WILL NOT BE PERMITTED.

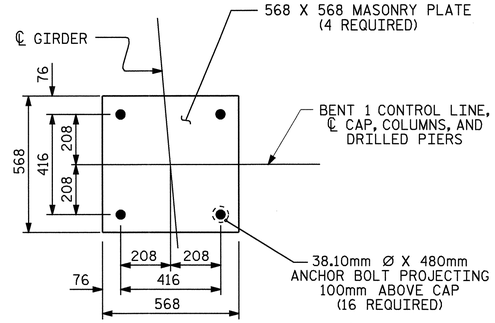

DETAIL A

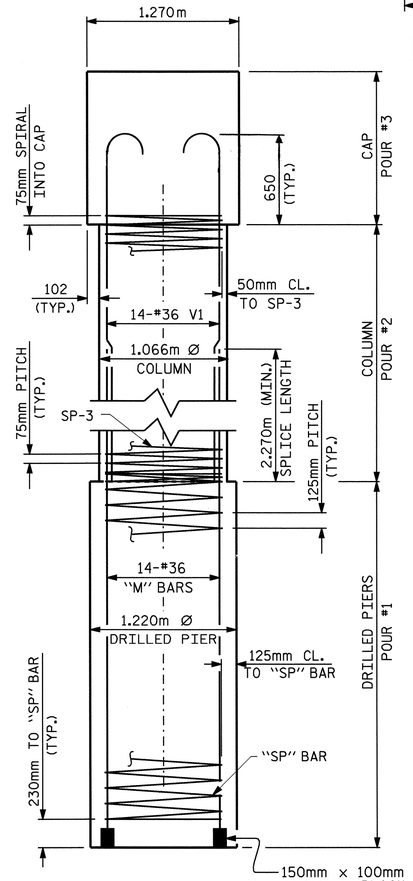

END VIEW

NORTH CAROLINA PROFESSIONAL SEAL 23926 ENGINEER BRIAN C. HANKS
5/22/06

PROJECT NO. R-0609IA

GUILFORD COUNTY

STATION: 28+77.454 -L-

SHEET 1 OF 2

STATE OF NORTH CAROLINA
DEPARTMENT OF TRANSPORTATION
RALEIGH

SUBSTRUCTURE
BENT 1

REVISIONS						SHEET NO.
NO.	BY:	DATE:	NO.	BY:	DATE:	S-64
1			3			TOTAL SHEETS
2			4			321

DRAWN BY : J.L. WALTON DATE : 12/16/04
CHECKED BY : R.W. WRIGHT DATE : 2/3/05

STR. #2

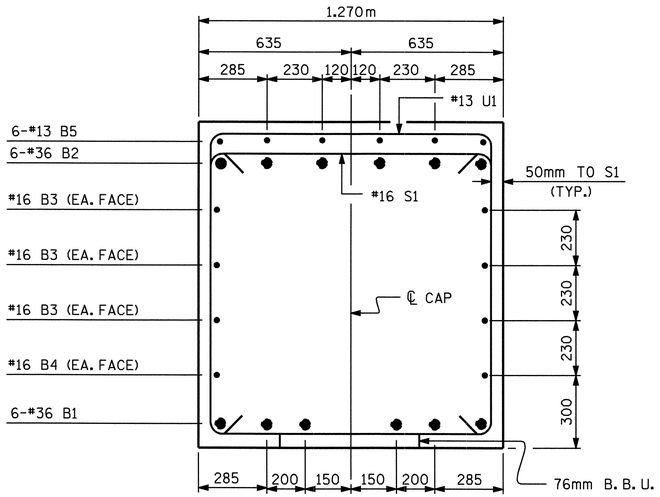

SECTION A-A

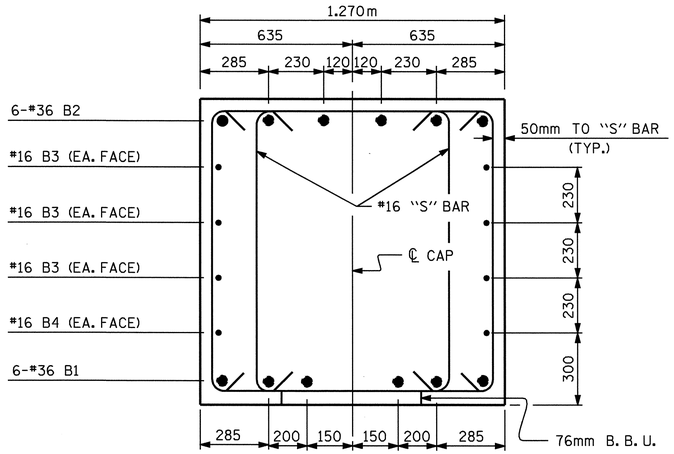

SECTION B-B

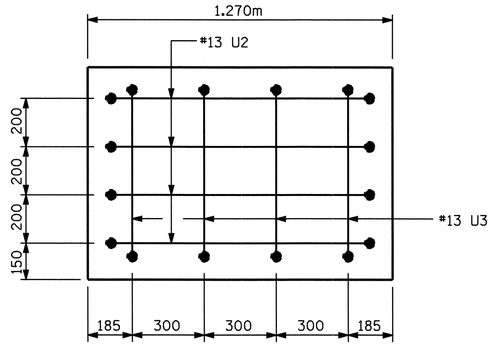

END VIEW X-X
(TYP. EA. END)

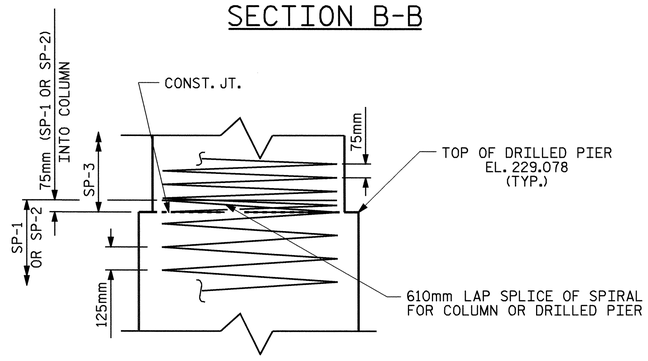

CONSTRUCTION JOINT DETAIL

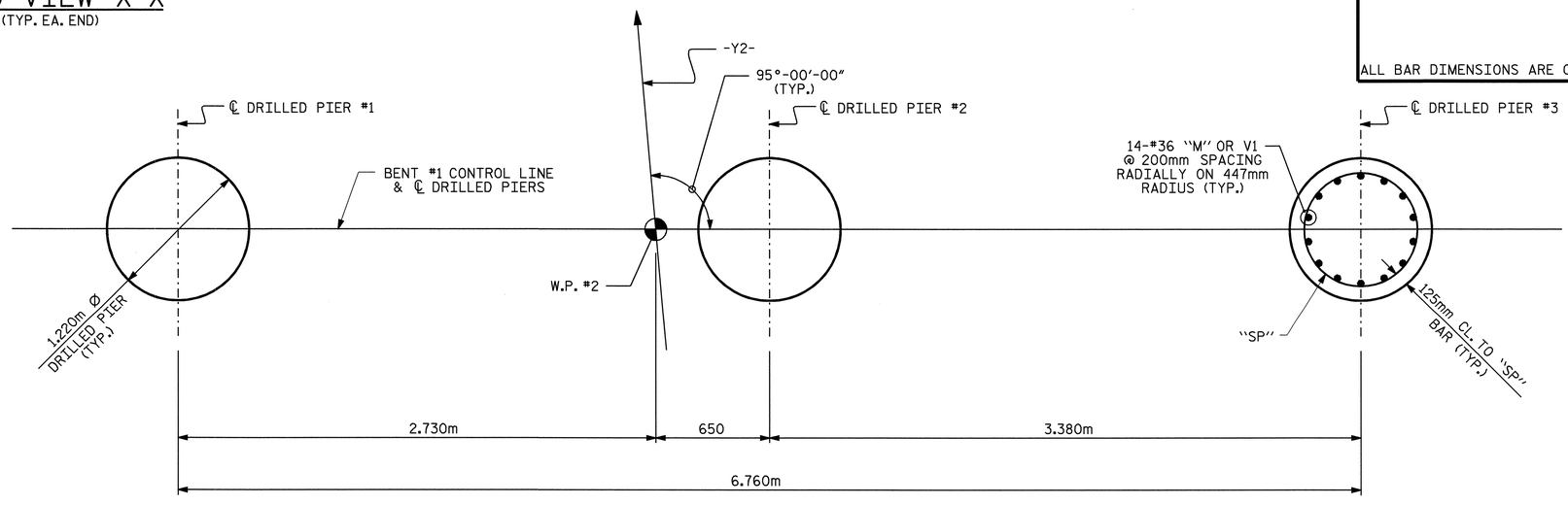

PLAN OF DRILLED PIERS

BAR TYPES

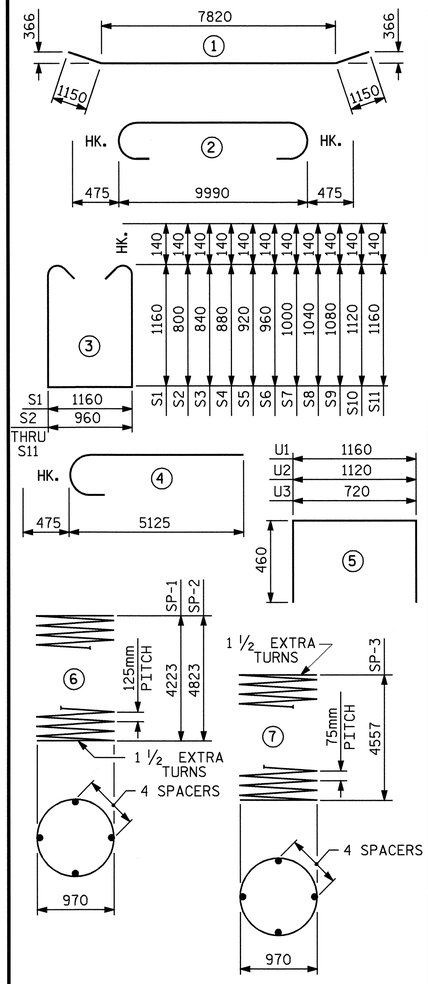

ALL BAR DIMENSIONS ARE OUT TO OUT.

BILL OF MATERIAL BENT 1

BAR	NO.	SIZE	TYPE	LENGTH	WEIGHT
B1	6	#36	1	10120	480
B2	6	#36	2	10940	519
B3	6	#16	STR	9980	93
B4	2	#16	STR	9120	28
B5	6	#13	STR	640	4
M1	28	#36	STR	8180	1811
M2	14	#36	STR	7580	839
S1	30	#16	3	3760	175
S2	4	#16	3	2840	18
S3	4	#16	3	2920	18
S4	4	#16	3	3000	19
S5	4	#16	3	3080	19
S6	4	#16	3	3160	20
S7	4	#16	3	3240	20
S8	4	#16	3	3320	21
S9	4	#16	3	3400	21
S10	4	#16	3	3480	22
S11	4	#16	3	3560	22
V1	42	#36	4	5600	1860
U1	20	#13	5	2080	41
U2	8	#13	5	2040	16
U3	8	#13	5	1640	13
REINFORCING STEEL				KG.	6079
SP-1	1	✻✻	6	107920	167
SP-2	2	✻✻	6	122900	381
SP-3	3	✻✻✻	7	188740	563
SPIRAL COLUMN REINFORCING STEEL KG. 1111					

CLASS "A" CONCRETE		
POUR #2 (COLUMN)	M³	12.0
POUR #3 (CAP)	M³	16.1
TOTAL CONCRETE	M³	28.1

DRILLED PIER QUANITIES

DRILLED PIER CONCRETE		
POUR #1 (DRILLED PIERS)	M³	16.8
1220mm Ø DRILLED PIERS IN SOIL	METERS	8.3
1220mm Ø DRILLED PIERS NOT IN SOIL	METERS	6.0
CSL TUBES	METERS	66.5
SID INSPECTION	EACH	3

✻✻ THE SP-1 & SP-2 SPIRAL REINFORCING STEEL SHALL BE W31 OR D-31 COLD DRAWN WIRE OR #16 PLAIN OR DEFORMED BAR.

✻✻✻ THE SP-3 SPIRAL REINFORCING STEEL SHALL BE W20 OR D-20 COLD DRAWN WIRE OR #13 PLAIN OR DEFORMED BAR.

PROJECT NO. R-0609IA

GUILFORD COUNTY

STATION: 28+77.454 -L-

SHEET 2 OF 2

STATE OF NORTH CAROLINA
DEPARTMENT OF TRANSPORTATION
RALEIGH

SUBSTRUCTURE
BENT 1

REVISIONS						SHEET NO.
NO.	BY:	DATE:	NO.	BY:	DATE:	S-65
1			3			TOTAL SHEETS
2			4			321

NORTH CAROLINA PROFESSIONAL SEAL 23926 ENGINEER BRIAN C. HAWKS
5/22/06

DRAWN BY : J.L. WALTON DATE : 12/16/04
CHECKED BY : R.W. WRIGHT DATE : 2/3/05

15-MAY-2006 10:41
J:\STRUCT~1\frye\FINAL_~1\Str2\R-0609IA_sd_B*_02.dgn
rwwright

STR. #2

J:\STRUCTURE\frye\FINAL_01\Str2\R-0609IA_sd_B*_02.dgn
rwwright

NOTES

STIRRUPS IN CAP MAY BE SHIFTED AS NECESSARY TO CLEAR ANCHOR BOLTS.

HOOKS ON "V" BARS MAY BE TURNED AS NECESSARY FOR PLACING REINFORCING STEEL.

ALL STEEL IN THE DRILLED PIERS IS INCLUDED IN THE PAY ITEMS FOR "REINFORCING STEEL" AND "SPIRAL COLUMN REINFORCING STEEL".

THE CONTRACTOR'S ATTENTION IS CALLED TO THE FACT THAT THE LONGITUDINAL REINFORCEMENT FOR THE DRILLED PIERS IS DETAILED WITH ONE METER OF EXTRA LENGTH.

THE LOCATION OF THE CONSTRUCTION JOINT IN THE DRILLED PIERS IS BASED ON AN APPROXIMATE GROUND LINE ELEVATION. IF THE CONSTRUCTION JOINT IS ABOVE THE ACTUAL GROUND LINE ELEVATION, THE CONTRACTOR SHALL PLACE THE CONSTRUCTION JOINT 300mm BELOW THE GROUND LINE.

SPLICING OF THE LONGITUDINAL BARS IN THE DRILLED PIER WILL NOT BE PERMITTED.

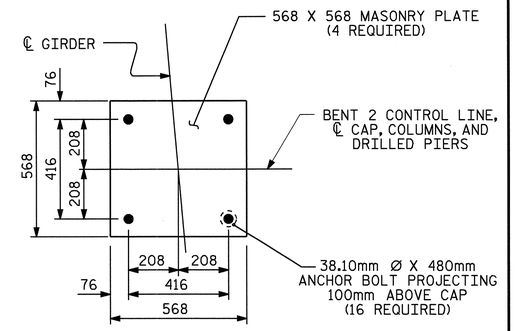

DETAIL A

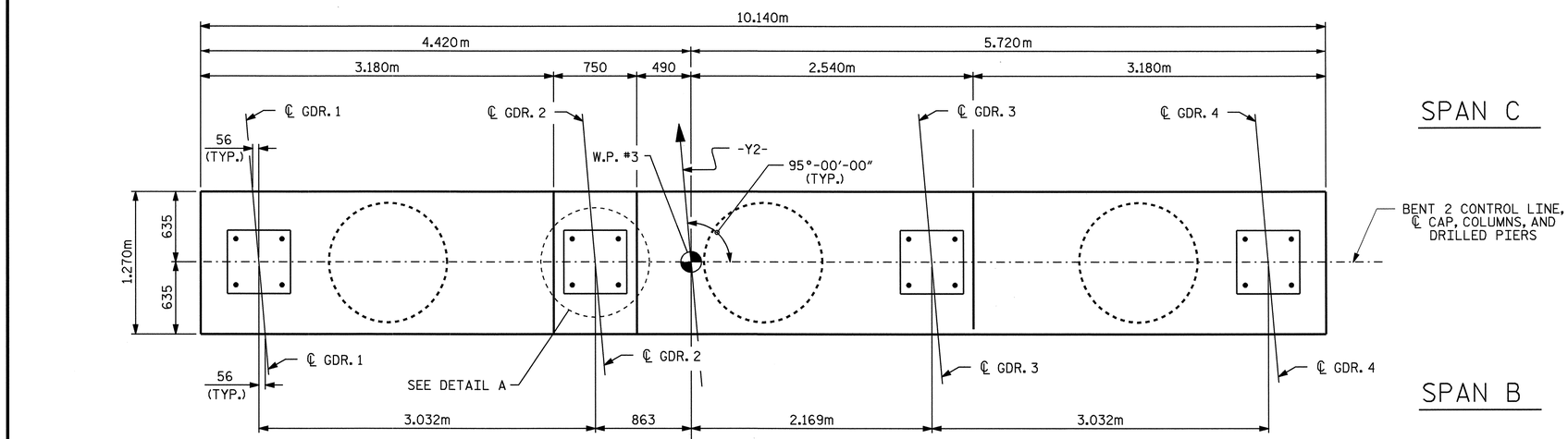

PLAN

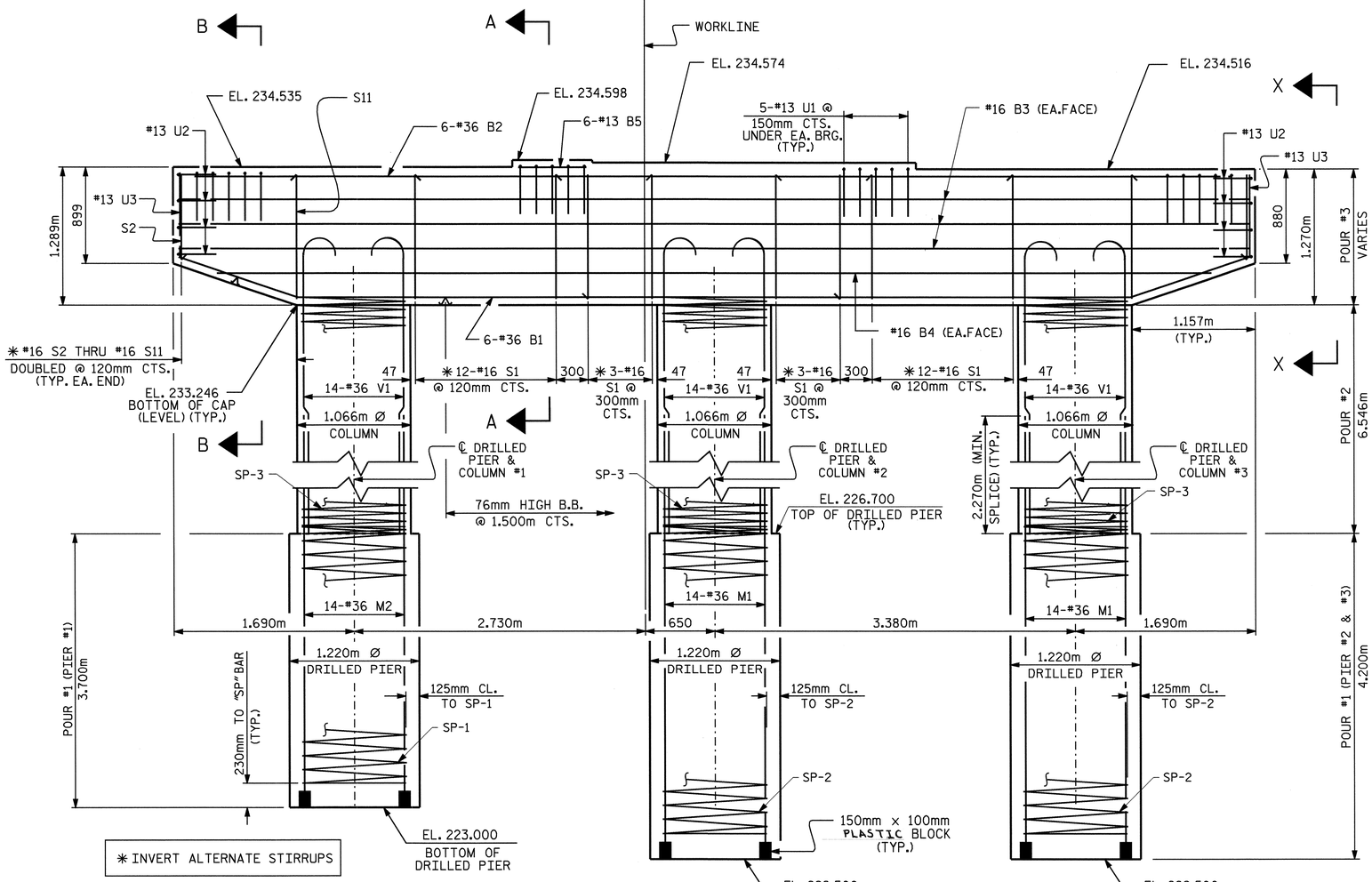

ELEVATION

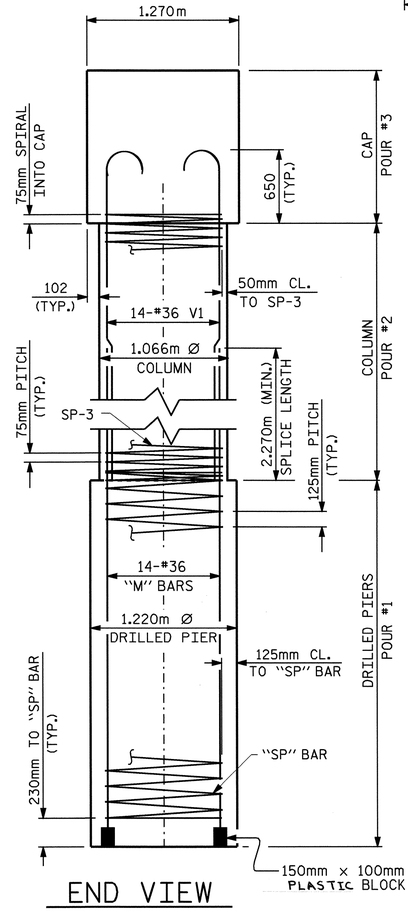

END VIEW

NORTH CAROLINA PROFESSIONAL SEAL 23926 ENGINEER BRIAN C. HAWKS
3/22/06

PROJECT NO. R-0609IA

GUILFORD COUNTY

STATION: 28+77.454 -L-

SHEET 1 OF 2

STATE OF NORTH CAROLINA
DEPARTMENT OF TRANSPORTATION
RALEIGH

SUBSTRUCTURE
BENT 2

REVISIONS						SHEET NO.
NO.	BY:	DATE:	NO.	BY:	DATE:	S-66
1			3			TOTAL SHEETS
2			4			321

DRAWN BY : J.L. WALTON DATE : 12/16/04
CHECKED BY : R.W. WRIGHT DATE : 2/3/05

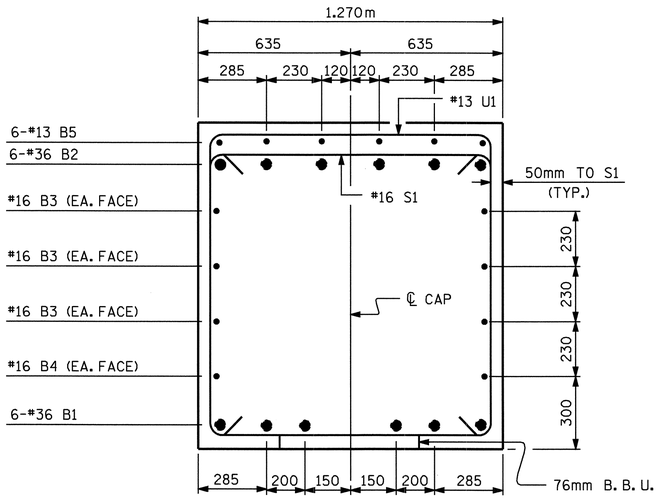

SECTION A-A

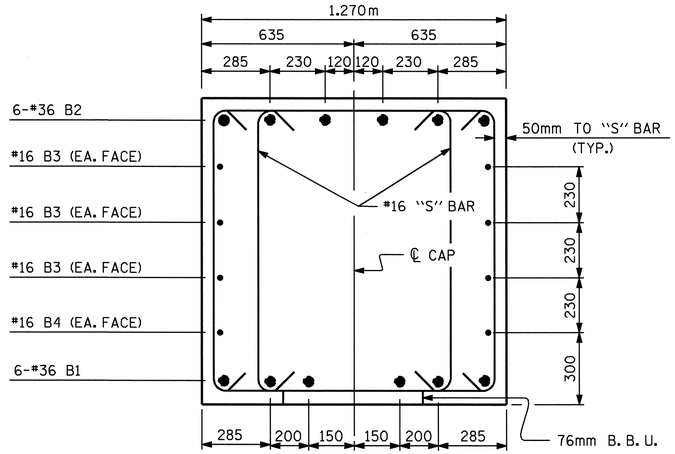

SECTION B-B

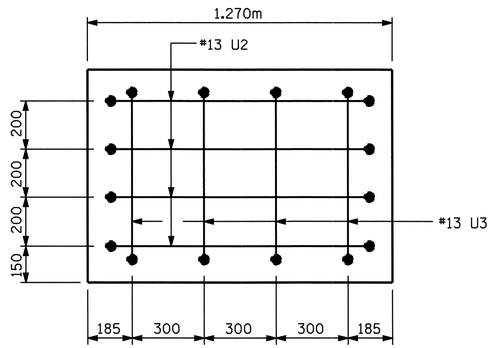

END VIEW X-X
(TYP. EA. END)

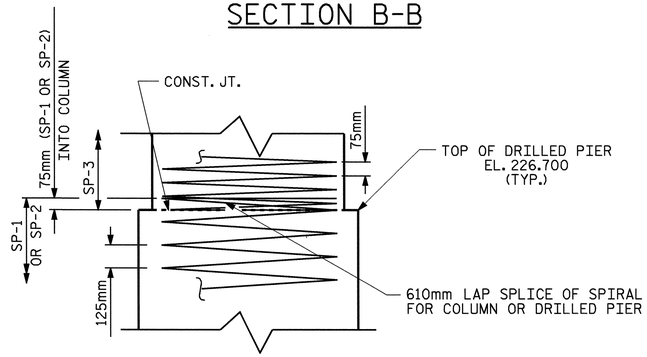

CONSTRUCTION JOINT DETAIL

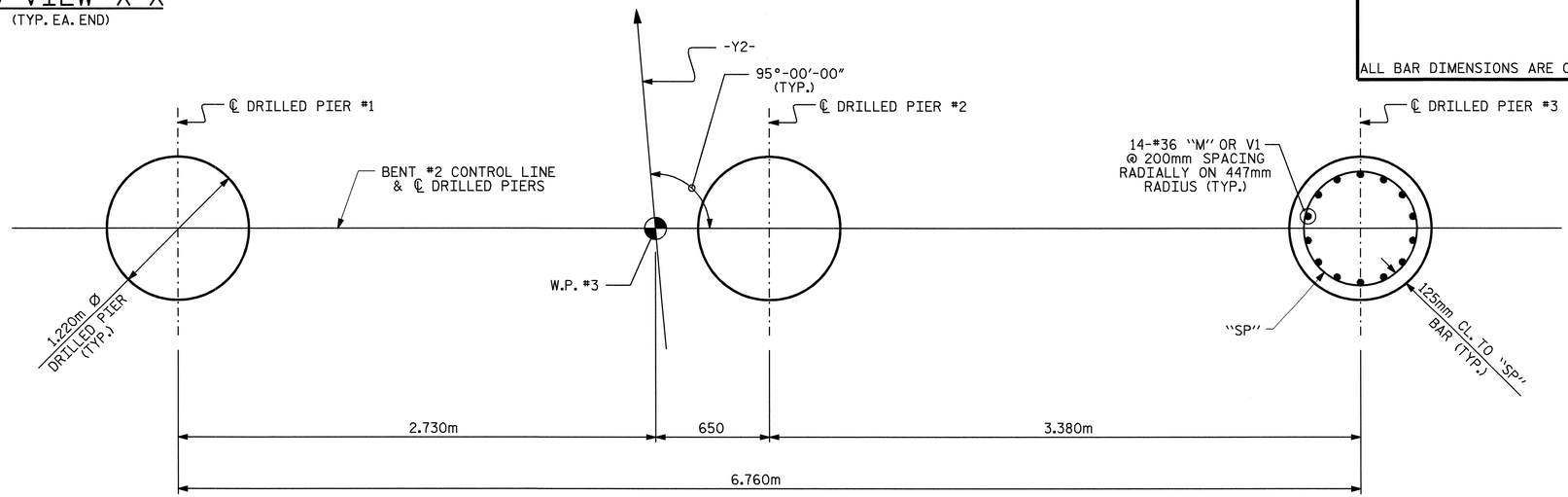

PLAN OF DRILLED PIERS

BAR TYPES

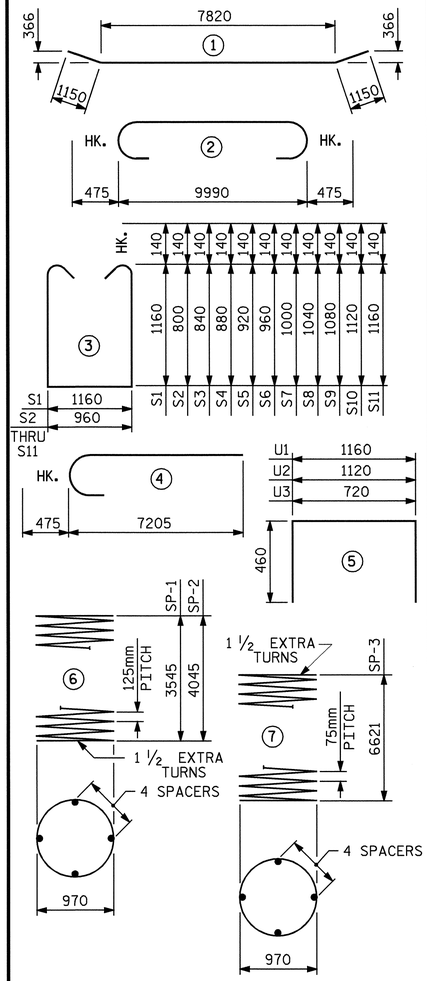

ALL BAR DIMENSIONS ARE OUT TO OUT.

BILL OF MATERIAL BENT 2

BAR	NO.	SIZE	TYPE	LENGTH	WEIGHT
B1	6	#36	1	10120	480
B2	6	#36	2	10940	519
B3	6	#16	STR	9980	93
B4	2	#16	STR	9120	28
B5	6	#13	STR	640	4
M1	28	#36	STR	7400	1638
M2	14	#36	STR	6900	764
S1	30	#16	3	3760	175
S2	4	#16	3	2840	18
S3	4	#16	3	2920	18
S4	4	#16	3	3000	19
S5	4	#16	3	3080	19
S6	4	#16	3	3160	20
S7	4	#16	3	3240	20
S8	4	#16	3	3320	21
S9	4	#16	3	3400	21
S10	4	#16	3	3480	22
S11	4	#16	3	3560	22
V1	42	#36	4	7680	2550
U1	20	#13	5	2080	41
U2	8	#13	5	2040	16
U3	8	#13	5	1640	13
REINFORCING STEEL				KG.	6521
SP-1	1	**	6	89940	140
SP-2	2	**	6	101920	316
SP-3	3	***	7	269640	804
SPIRAL COLUMN REINFORCING STEEL KG. 1260					

CLASS "A" CONCRETE		
POUR #2 (COLUMN)	M3	17.5
POUR #3 (CAP)	M3	16.1
TOTAL CONCRETE	M3	33.6

DRILLED PIER QUANITIES

DRILLED PIER CONCRETE		
POUR #1 (DRILLED PIERS)	M3	14.1
1220mm Ø DRILLED PIERS IN SOIL	METERS	6.1
1220mm Ø DRILLED PIERS NOT IN SOIL	METERS	6.0
CROSSHOLE SONIC LOGGING	EA.	1
CSL TUBES	METERS	57.5
SID INSPECTION	EACH	3

** THE SP-1 & SP-2 SPIRAL REINFORCING STEEL SHALL BE W31 OR D-31 COLD DRAWN WIRE OR #16 PLAIN OR DEFORMED BAR.

*** THE SP-3 SPIRAL REINFORCING STEEL SHALL BE W20 OR D-20 COLD DRAWN WIRE OR #13 PLAIN OR DEFORMED BAR.

PROJECT NO. R-0609IA

GUILFORD COUNTY

STATION: 28+77.454 -L-

SHEET 2 OF 2

STATE OF NORTH CAROLINA
DEPARTMENT OF TRANSPORTATION
RALEIGH

SUBSTRUCTURE
BENT 2

NORTH CAROLINA PROFESSIONAL SEAL 23926 ENGINEER BRIAN C. HAWKINS
5/22/06

REVISIONS						SHEET NO.
NO.	BY:	DATE:	NO.	BY:	DATE:	S-67
1			3			TOTAL SHEETS
2			4			321

DRAWN BY : J.L. WALTON DATE : 12/16/04
CHECKED BY : R.W. WRIGHT DATE : 2/3/05

15-MAY-2006 10:41
J:\STRUCT~1\frye\FINAL_~1\Str2\R-0609IA_sd_B*_02.dgn
rwwright

STR. #2

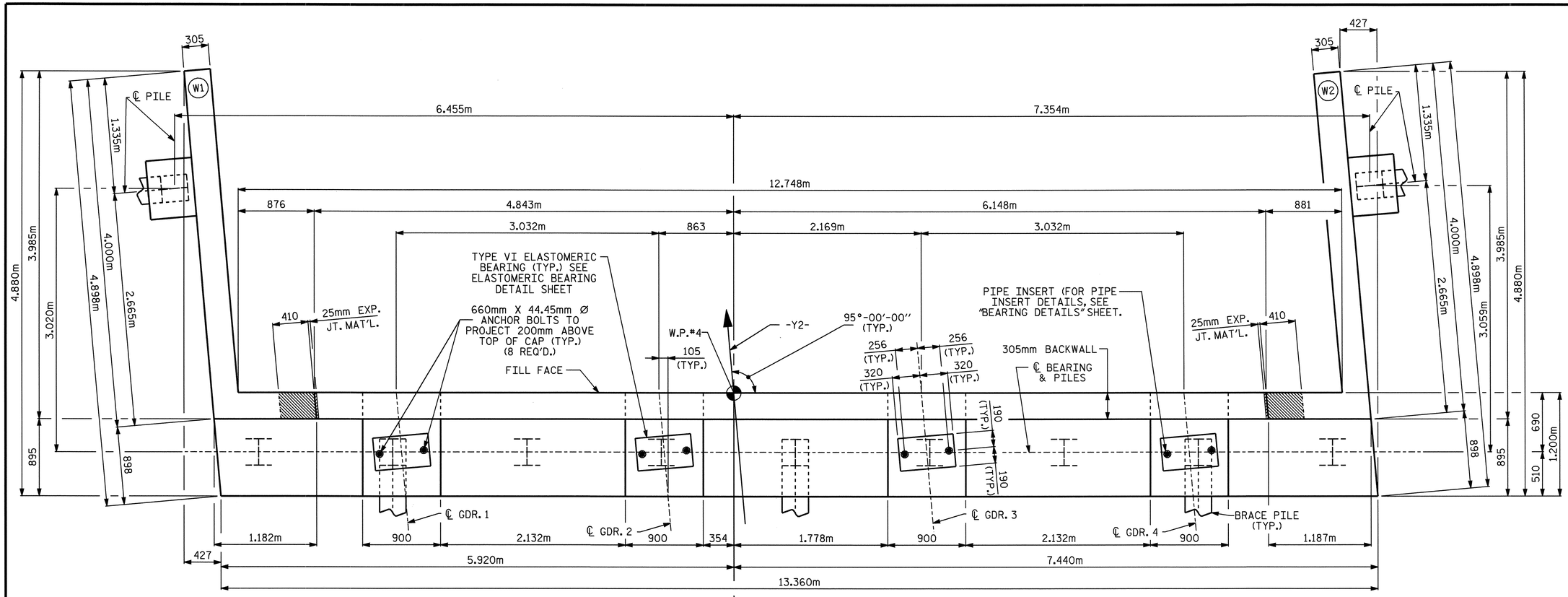

PLAN

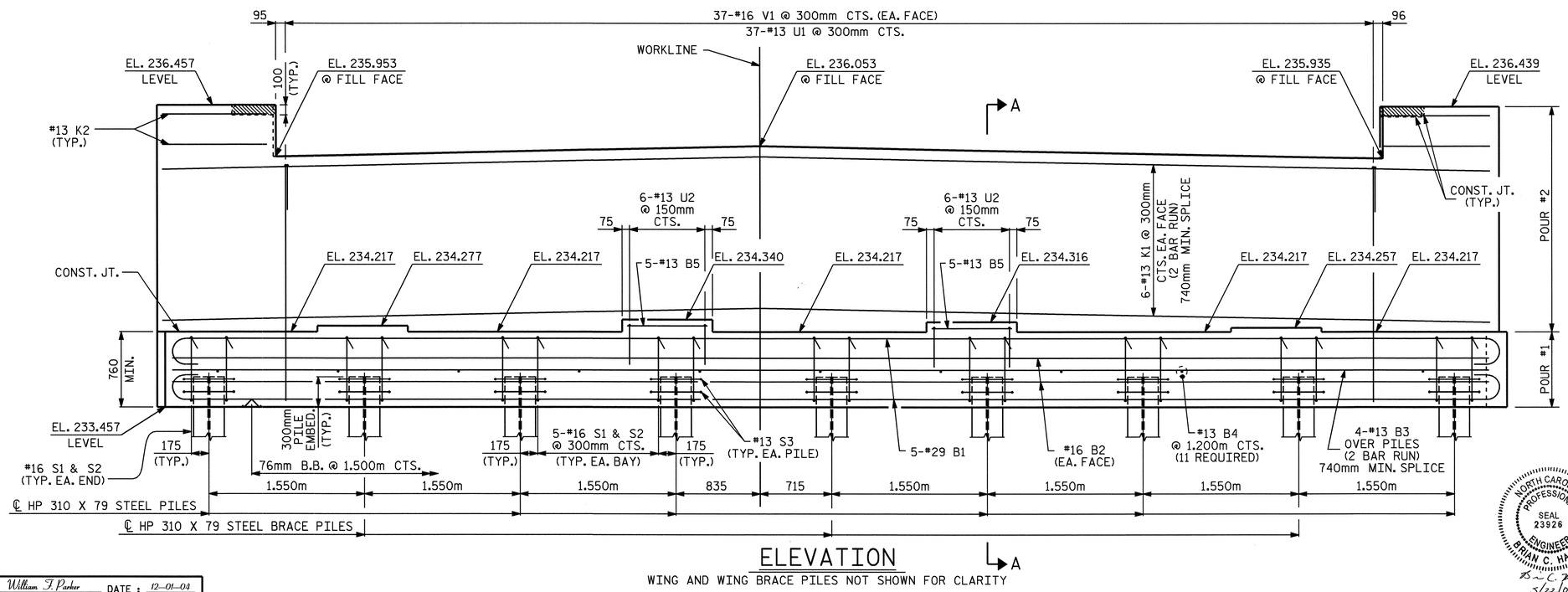

ELEVATION

WING AND WING BRACE PILES NOT SHOWN FOR CLARITY

NORTH CAROLINA PROFESSIONAL SEAL 23926 ENGINEER BRIAN C. HANKS
5/22/06

PROJECT NO. R-0609IA
GUILFORD COUNTY
STATION: 28+77.454 -L-

SHEET 1 OF 3

STATE OF NORTH CAROLINA
DEPARTMENT OF TRANSPORTATION
RALEIGH

SUBSTRUCTURE
END BENT 2

REVISIONS						SHEET NO.
NO.	BY:	DATE:	NO.	BY:	DATE:	S-68
1			3			TOTAL SHEETS
2			4			321

DRAWN BY : William T. Parker DATE : 12-01-04
CHECKED BY : R.W. WRIGHT DATE : 2/3/05

15-MAY-2006 10:40
J:\STRUCT~1\frye\FINAL_~1\Str2\R-0609IA_sd_EB_02.dgn
rwwright

STR.#2

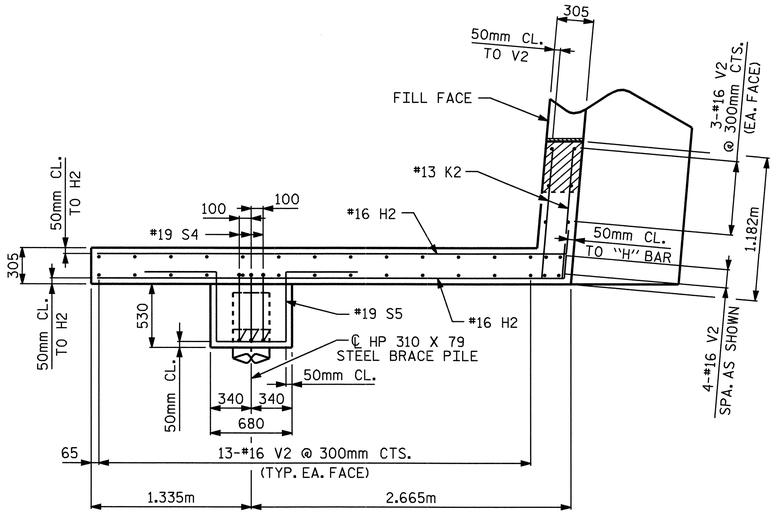

PLAN - W1

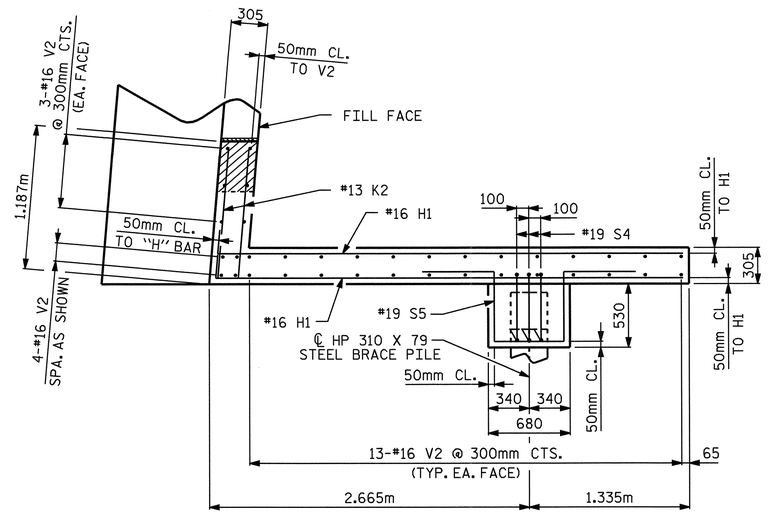

PLAN - W2

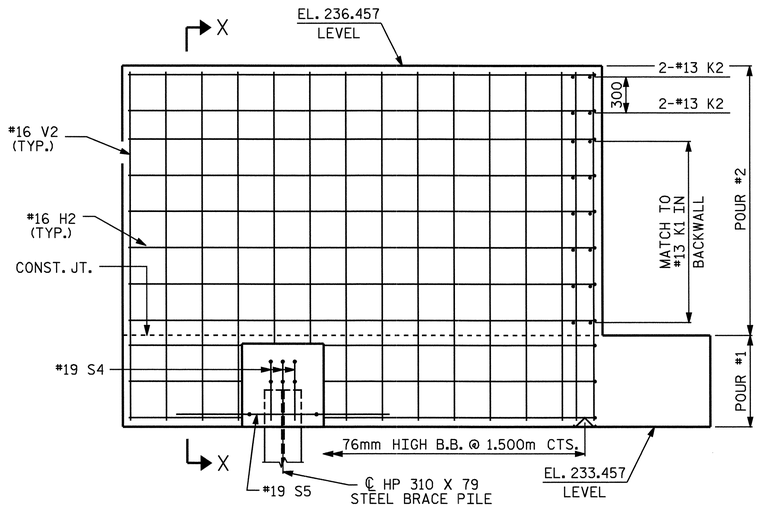

ELEVATION - W1

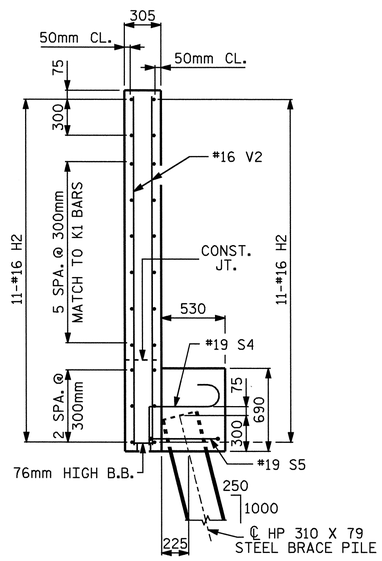

SECTION X-X

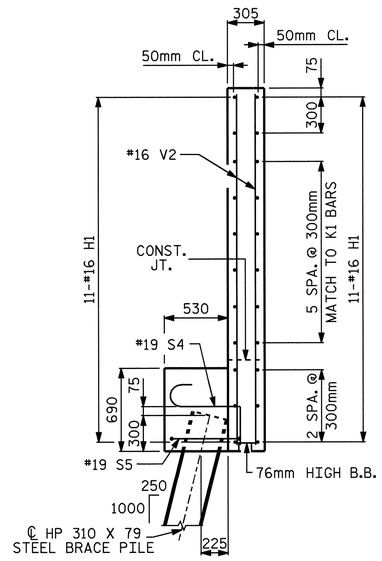

SECTION Y-Y

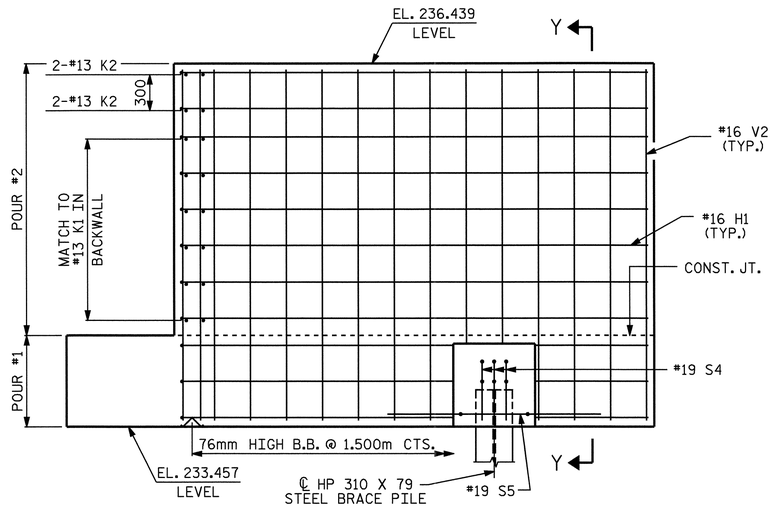

ELEVATION - W2

NOTES

STIRRUPS IN CAP MAY BE SHIFTED AS NECESSARY TO CLEAR ANCHOR BOLTS.

EPOXY COAT THE END BENT CAP AFTER ADJUSTMENTS ARE MADE TO BEARINGS AND ANCHOR BOLTS ARE GROUTED.

FOR EPOXY PROTECTIVE COATING, SEE SPECIAL PROVISIONS.

BACKWALL SHALL BE PLACED BEFORE APPLYING THE EPOXY PROTECTIVE COATING.

THE TOP SURFACE AREAS OF THE END BENT CAP SHALL BE CURED IN ACCORDANCE WITH THE STANDARD SPECIFICATIONS EXCEPT THE MEMBRANE CURING COMPOUND METHOD SHALL NOT BE USED.

THE TOP SURFACE OF THE CAP EXCEPT THE BRIDGE SEAT BUILDUPS SHALL BE SLOPED TRANSVERSELY FROM THE FILL FACE TO THE BACK FACE AT THE RATE OF 2 %.

THE CONTRACTOR SHALL PROVIDE FOR INSTALLATION OF THE 102mm DIAMETER DRAIN PIPE THROUGH THE WING WALL AS REQUIRED FOR REINFORCED BRIDGE APPROACH FILLS. SEE THE ROADWAY PLANS. REINFORCING STEEL IN THE WING WALL MAY BE SHIFTED AS NECESSARY TO CLEAR THE DRAIN PIPE.

THE CONCRETE IN THE SHADED AREA OF THE WING SHALL BE POURED AFTER THE JOINT BETWEEN THE DECK AND THE APPROACH SLAB HAS BEEN SAWED AND THE PARAPET AND END POST ARE CAST IF SLIP FORMING IS USED.

NORTH CAROLINA PROFESSIONAL SEAL 23926 ENGINEER BRIAN C. HANKS
5/22/06

PROJECT NO. R-0609IA
GUILFORD COUNTY
STATION: 28+77.454 -L-

SHEET 2 OF 3

STATE OF NORTH CAROLINA
DEPARTMENT OF TRANSPORTATION
RALEIGH

SUBSTRUCTURE
END BENT 2

REVISIONS						SHEET NO.
NO.	BY:	DATE:	NO.	BY:	DATE:	S-69
1			3			TOTAL SHEETS
2			4			321

DRAWN BY : William F Parker DATE : 12-01-04
CHECKED BY : R.W. WRIGHT DATE : 2/3/05

15-MAY-2006 10:40
J:\STRUCT~1\frye\FINAL_~1\Str2\R-0609IA_sd_EB_02.dgn
rwwright

STR.#2

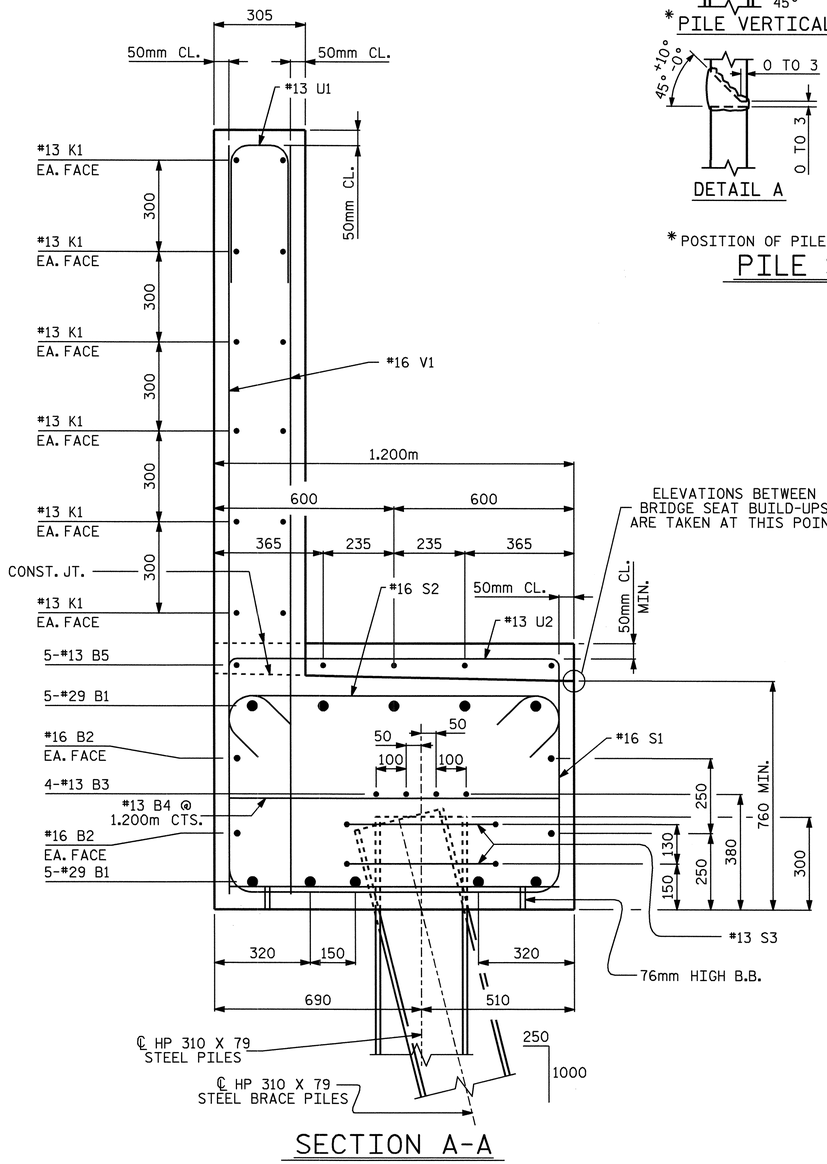

SECTION A-A

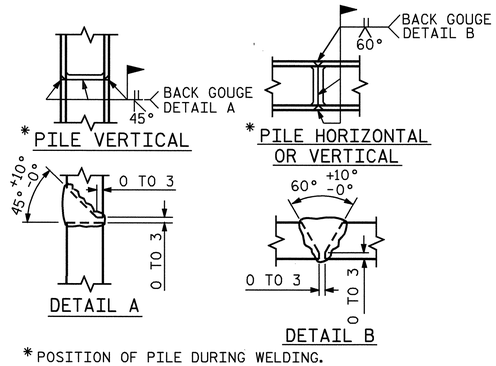

*POSITION OF PILE DURING WELDING.

PILE SPLICE DETAILS

BAR TYPES

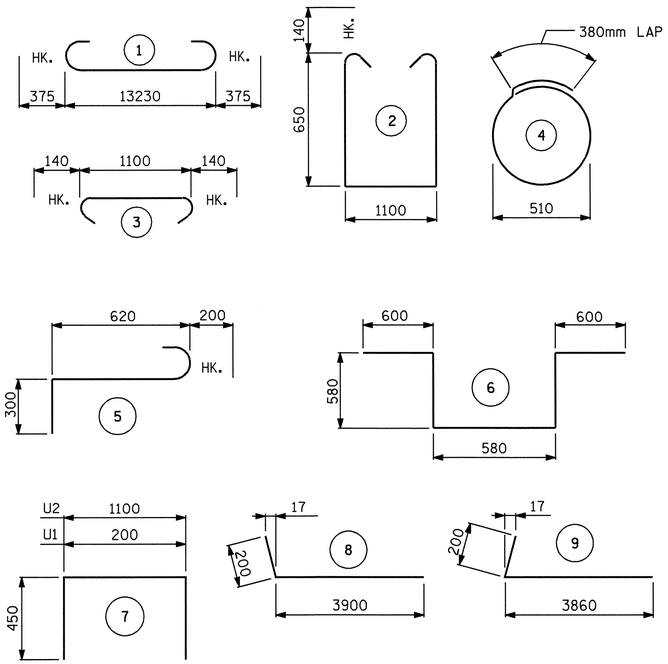

ALL BAR DIMENSIONS ARE OUT TO OUT.

BILL OF MATERIAL
END BENT 2

BAR	NO.	SIZE	TYPE	LENGTH	WEIGHT
B1	10	#29	1	13980	707
B2	4	#16	STR	13260	82
B3	8	#13	STR	7000	56
B4	11	#13	STR	1100	12
B5	10	#13	STR	800	8
H1	22	#16	9	4060	139
H2	22	#16	8	4100	140
K1	24	#13	STR	7000	167
K2	8	#13	STR	1080	9
S1	42	#16	2	2680	175
S2	42	#16	3	1380	90
S3	18	#13	4	1980	35
S4	6	#19	5	1120	15
S5	2	#19	6	2940	13
U1	37	#13	7	1100	40
U2	12	#13	7	2000	24
V1	74	#16	STR	2380	273
V2	72	#16	STR	2880	322

REINFORCING STEEL = 2307 kg

CLASS 'A' CONCRETE
POUR #1 : CAP & WINGS - 14.7 m³
POUR #2 : WINGS & BACKWALL - 12.5 m³
TOTAL CLASS 'A' CONCRETE - 27.2 m³

HP 310 X 79 STEEL PILES
NO. 11 METERS 88

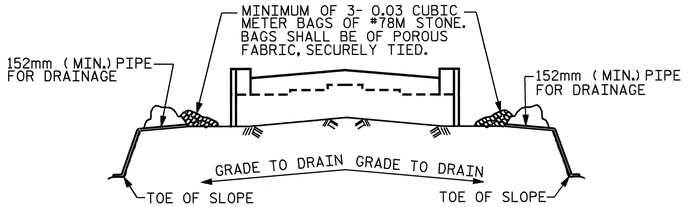

BAGGED STONE AND PIPE SHALL BE PLACED IMMEDIATELY AFTER COMPLETION OF END BENT EXCAVATION. PIPE MAY BE EITHER CONCRETE, CORRUGATED STEEL, CORRUGATED ALUMINUM ALLOY, OR CORRUGATED PLASTIC. PERFORATED PIPE WILL NOT BE ALLOWED.

BAGGED STONE SHALL REMAIN IN PLACE UNTIL THE ENGINEER DIRECTS THAT IT BE REMOVED. THE CONTRACTOR SHALL REMOVE AND DISPOSE OF SILT ACCUMULATIONS AT BAGGED STONE WHEN SO DIRECTED BY THE ENGINEER. BAGS SHALL BE REMOVED AND REPLACED WHENEVER THE ENGINEER DETERMINES THAT THEY HAVE DETERIORATED AND LOST THEIR EFFECTIVENESS.

NO SEPARATE PAYMENT WILL BE MADE FOR THIS WORK AND THE ENTIRE COST OF THIS WORK SHALL BE INCLUDED IN THE UNIT CONTRACT PRICE FOR THE SEVERAL PAY ITEMS.

TEMPORARY DRAINAGE AT END BENT

NORTH CAROLINA PROFESSIONAL SEAL 23926 ENGINEER BRIAN C. HANKS
5/22/06

PROJECT NO. R-0609IA
GUILFORD COUNTY
STATION: 28+77.454 -L-

SHEET 3 OF 3

STATE OF NORTH CAROLINA
DEPARTMENT OF TRANSPORTATION
RALEIGH

SUBSTRUCTURE
END BENT 2

REVISIONS						SHEET NO.
NO.	BY:	DATE:	NO.	BY:	DATE:	S-70
1			3			TOTAL SHEETS
2			4			321

DRAWN BY : William T Parker DATE : 12-01-04
CHECKED BY : R.W. WRIGHT DATE : 2/3/05

15-MAY-2006 10:41
J:\STRUCT~1\frye\FINAL_~1\Str2\R-0609IA_sd_EB_02.dgn
rwwright

STR.#2

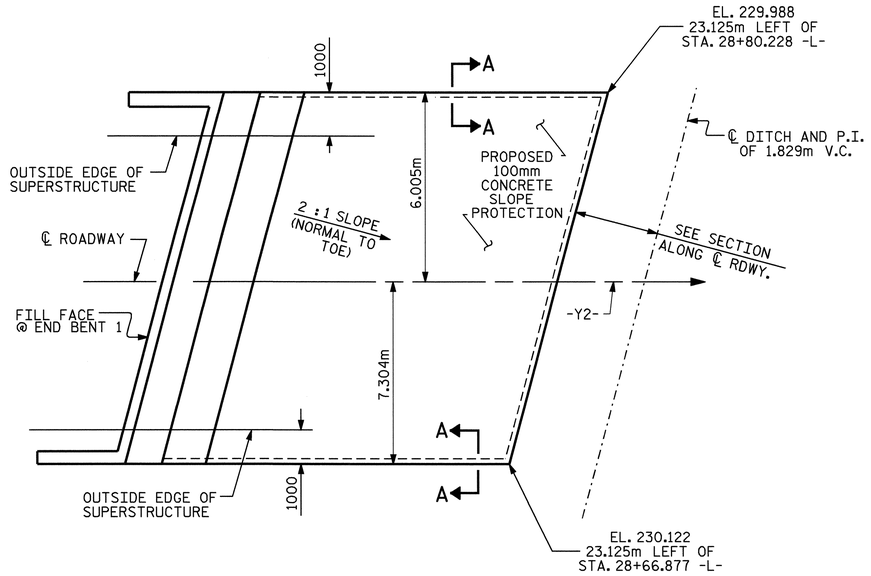

PLAN OF SLOPE PROTECTION

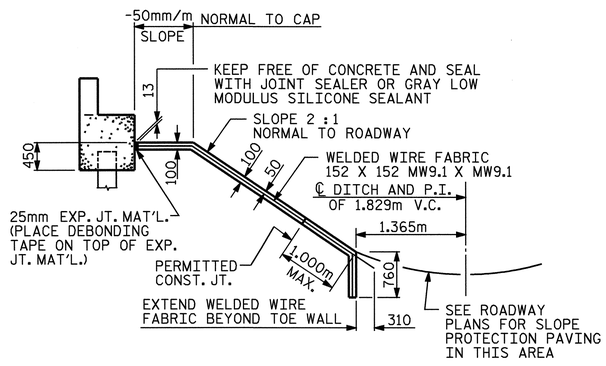

SECTION ALONG ℄ ROADWAY WHEN FILL CATCHES IN DITCH

NOTES

SLOPE PROTECTION SHALL BE PLACED UNDER THE ENDS OF THE BRIDGE AS SHOWN IN THE DETAILS. METHOD OF MEASUREMENT AND BASIS OF PAYMENT SHALL BE AS DESCRIBED IN SECTION 462 OF THE STANDARD SPECIFICATIONS. FOR BERM WIDTH, SEE GENERAL DRAWING.

SLOPE PROTECTION SHALL CONSIST OF 100mm POURED-IN-PLACE CONCRETE PAVING AS SHOWN IN THE DETAILS ON THIS SHEET. CONCRETE SHALL BE CLASS "B". THE CONCRETE SURFACE SHALL BE FLOATED WITH A WOODEN FLOAT AND FINISHED. WELDED WIRE FABRIC REINFORCING SHALL BE 152 X 152 - W9.1 X W9.1, 1520mm WIDE. SLOPE PROTECTION SHALL BE POURED IN 1520mm STRIPS AS SHOWN IN THE "POURING DETAIL" WITH 600mm LONG #13 BARS PLACED ALONG THE SLOPE BETWEEN STRIPS AT 450mm MAXIMUM SPACING. SLOPE PROTECTION MAY BE POURED IN ALTERNATE 1220mm AND 1520mm STRIPS AS SHOWN IN THE "OPTIONAL POURING DETAIL" WITH ADJACENT RUNS OF WELDED WIRE FABRIC LAPPING AT LEAST 152mm. THE COST OF THE WELDED WIRE FABRIC AND #13 BARS, IF USED, SHALL BE INCLUDED IN THE CONTRACT UNIT PRICE BID PER SQUARE METER FOR SLOPE PROTECTION.

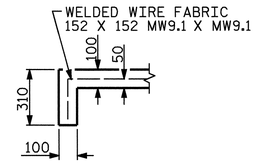

SECTION A-A

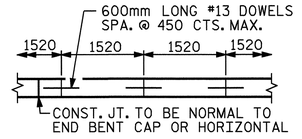

STRIP WIDTHS MAY VARY IN CURVED PORTION.

POURING DETAIL

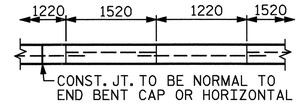

POUR A 1220mm STRIP FIRST. STRIP WIDTHS MAY VARY IN CURVED PORTION.

OPTIONAL POURING DETAIL

BRIDGE @ STA. 28+77.454 -L-	100mm SLOPE PROTECTION	* WELDED WIRE FABRIC 1520mm WIDE
	SQUARE METERS	APPROX. METERS
END BENT 1	160	140

* QUANTITY SHOWN IS BASED ON 1520mm POURS.

PROJECT NO. R-0609IA
GUILFORD COUNTY
STATION: 28+77.454 -L-

STATE OF NORTH CAROLINA
DEPARTMENT OF TRANSPORTATION
RALEIGH

STANDARD SLOPE PROTECTION DETAILS

NORTH CAROLINA PROFESSIONAL SEAL 23926 ENGINEER BRIAN C. HAWKS
5/22/06

REVISIONS						SHEET NO.
NO.	BY:	DATE:	NO.	BY:	DATE:	S-71
1			3			TOTAL SHEETS
2			4			321

ASSEMBLED BY : J.L. WALTON	DATE : 11/18/04	
CHECKED BY : W.F. PARKER	DATE : 1/28/05	
DRAWN BY : ELR 5/92	REV. 10/17/00	RWW/LES
CHECKED BY : GRP 6/92	REV. 7/10/01	LES/RDR
	REV. 5/7/03	RWW/JTE

15-MAY-2006 10:42
J:\STRUCT~1\frye\FINAL_~1\Str2\R-0609IA_sd_SP_02.dgn
rwwright

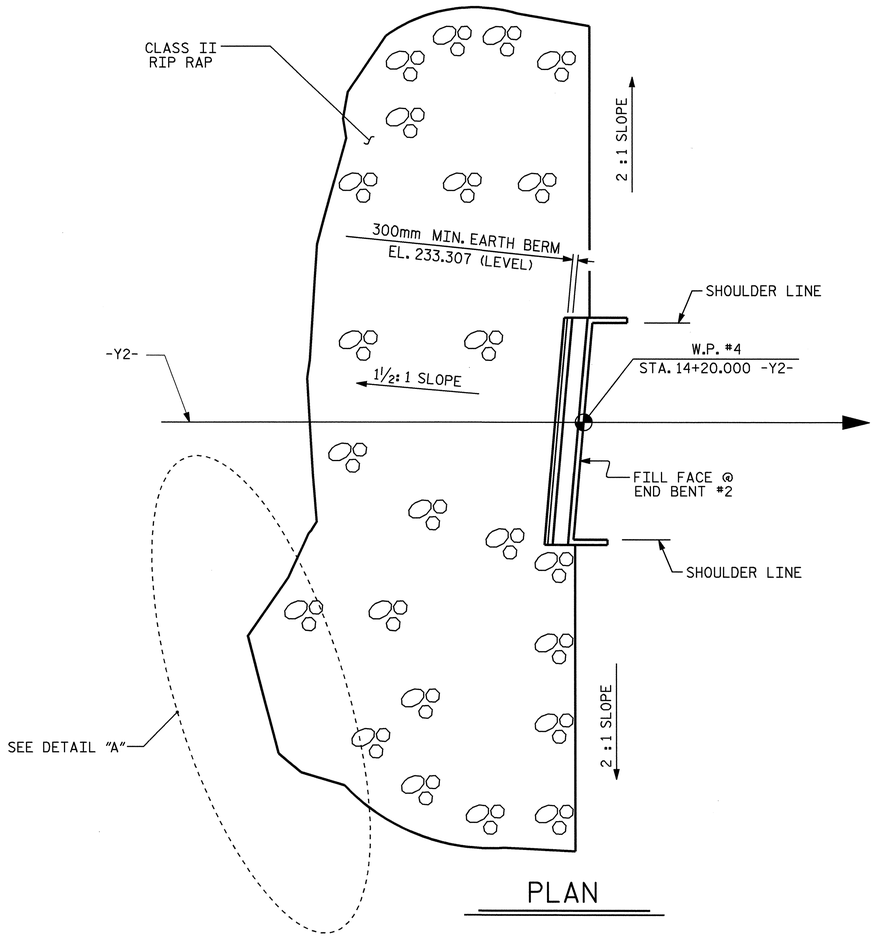

PLAN

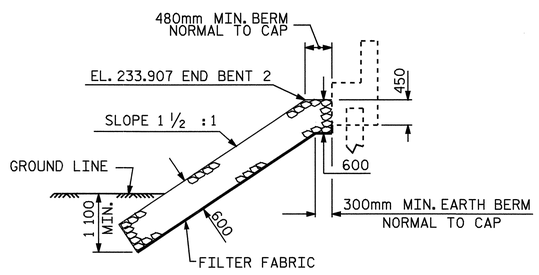

℄ SECTION
BERM RIP RAPPED

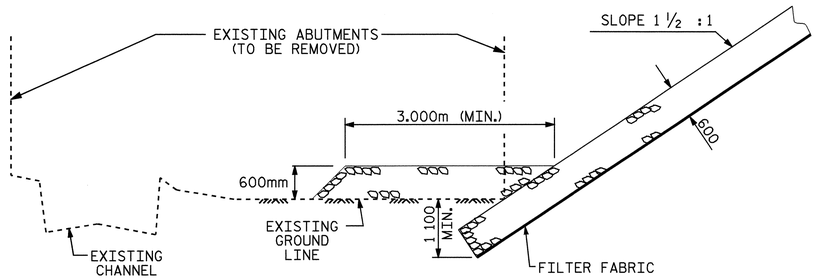

DETAIL A

ESTIMATED QUANTITIES		
BRIDGE @ STA. 28+77.454 -L-	PLAIN RIP RAP CLASS II	FILTER FABRIC FOR DRAINAGE
	METRIC TONS	SQUARE METERS
END BENT 2	1530	1500

PROJECT NO. R-0609IA
GUILFORD COUNTY
STATION: 28+77.454 -L-

STATE OF NORTH CAROLINA
DEPARTMENT OF TRANSPORTATION
RALEIGH

STANDARD

—RIP RAP DETAILS—

NORTH CAROLINA PROFESSIONAL SEAL 23926 ENGINEER BRIAN C. HANKS
5/22/06

ASSEMBLED BY : J.L. WALTON	DATE : 11/18/04
CHECKED BY : W.F. PARKER	DATE : 1/28/05
DRAWN BY : REK 1/84	REV. 7/17/98 REK/RWW
CHECKED BY : RDU 1/84	REV. 8/16/99 RWW/LES
	REV. 10/17/00 RWW/LES

REVISIONS						SHEET NO.
NO.	BY:	DATE:	NO.	BY:	DATE:	S-72
1			3			TOTAL SHEETS
2			4			321

15-MAY-2006 10:42
J:\STRUCT~1\frye\FINAL_~1\Str2\R-0609IA_sd_SP_02.dgn
rwwright

STR 2

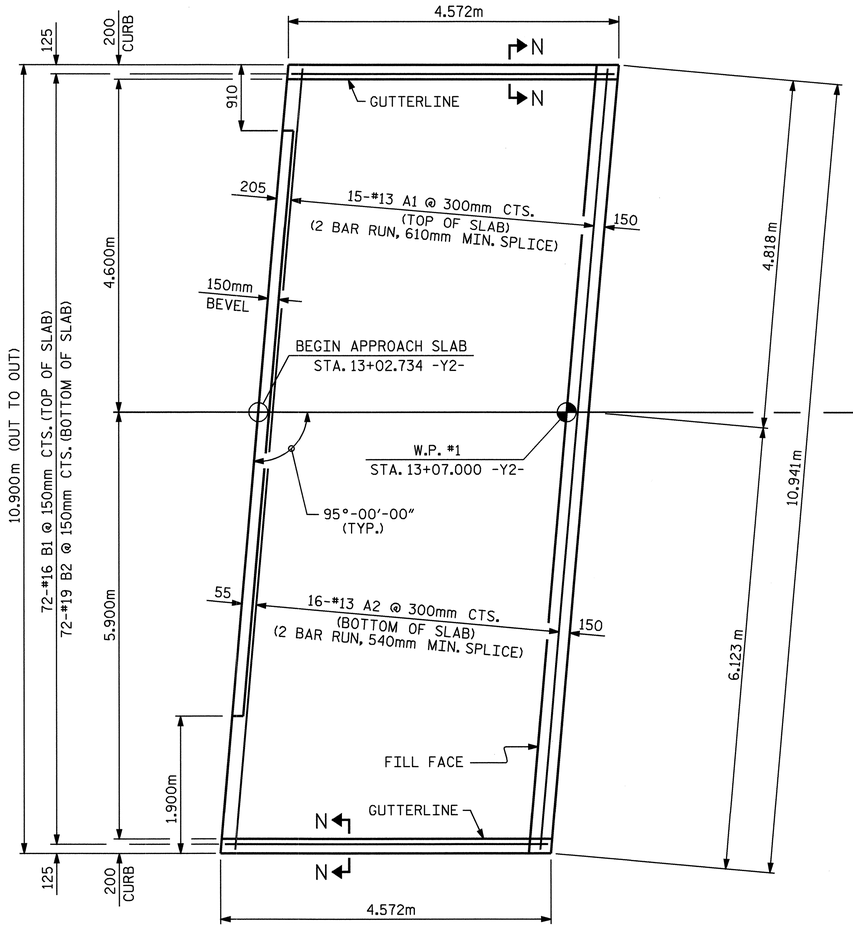

PLAN @ END BENT 1

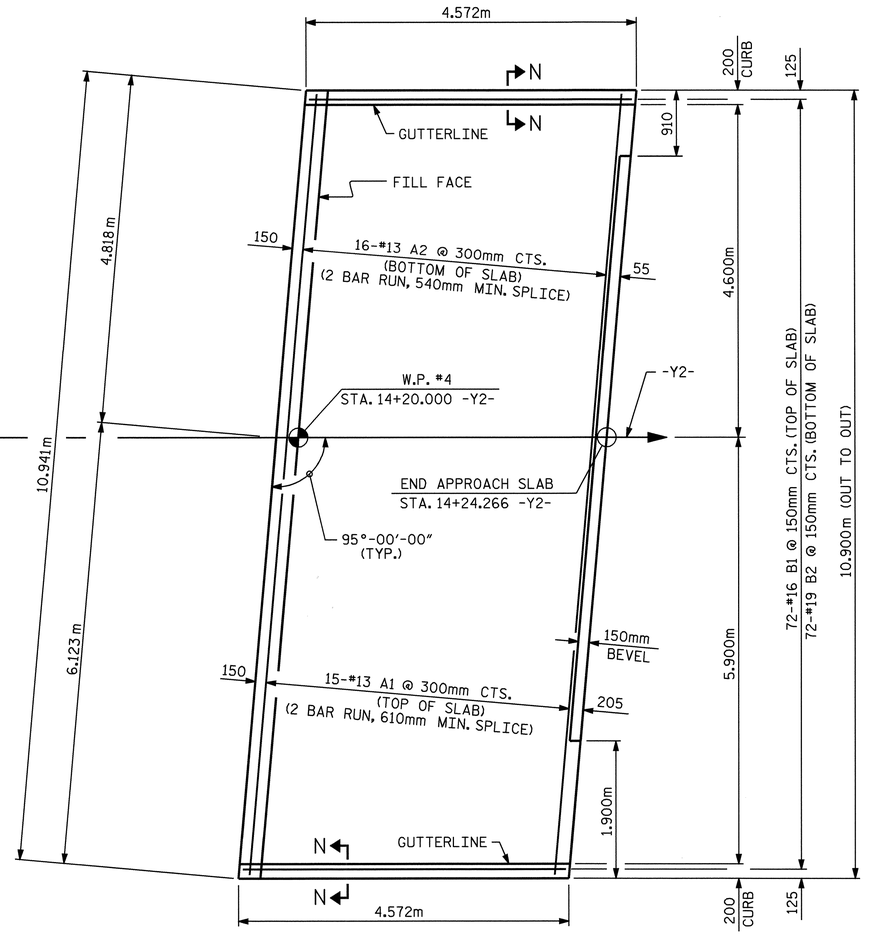

PLAN @ END BENT 2

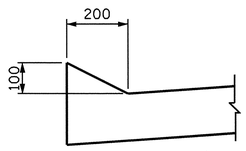

SECTION N-N

PROJECT NO. R-0609IA

GUILFORD COUNTY

STATION: 28+77.454 -L-

SHEET 1 OF 2

STATE OF NORTH CAROLINA
DEPARTMENT OF TRANSPORTATION
RALEIGH

BRIDGE APPROACH SLAB FOR FLEXIBLE PAVEMENT

NORTH CAROLINA PROFESSIONAL SEAL 23926 ENGINEER BRIAN C. HAWKS
3/22/06

REVISIONS						SHEET NO.
NO.	BY:	DATE:	NO.	BY:	DATE:	S-73
1			3			TOTAL SHEETS
2			4			321

DRAWN BY : J.L. WALTON DATE : 11/30/04
CHECKED BY : W.F. PARKER DATE : 1/26/04

15-MAY-2006 10:42
J:\STRUCT~1\frye\FINAL_~1\Str2\R-0609IA_sd_AS_02.dgn
rwwright

STR. #2

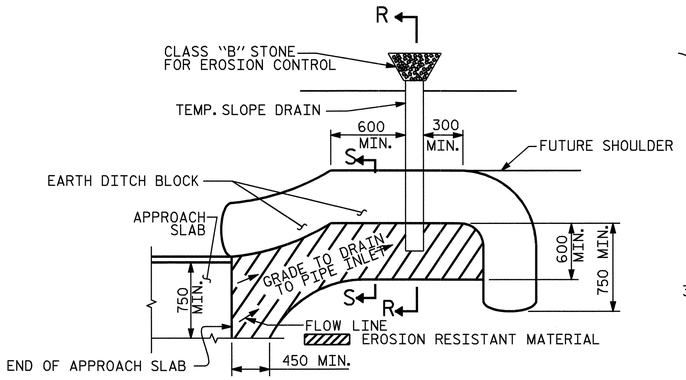

NOTE: IMMEDIATELY AFTER THE CONSTRUCTION OF THE APPROACH SLAB, THE CONTRACTOR SHALL PROVIDE TEMPORARY BERM AND SLOPE DRAIN. CONTRACTOR SHALL GRADE TO PIPE INLET AND PROVIDE EROSION RESISTANT MATERIAL AS SHOWN. THE EROSION RESISTANT MATERIAL SHALL BE EITHER 1) ASPHALT PLANT MIX, TYPE 1 OR TYPE 2, MIN. 50mm DEPTH, 2) EROSION CONTROL MAT, OR 3) CONCRETE, AS DIRECTED BY THE ENGINEER. THE SLOPE DRAIN SHALL CONSIST OF A NON-PERFORATED TEMPORARY DRAINAGE PIPE, 305mm IN DIAMETER.

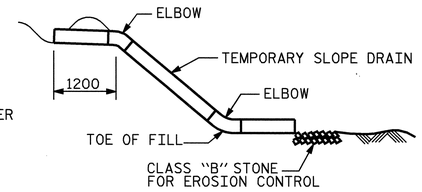

SECTION R-R

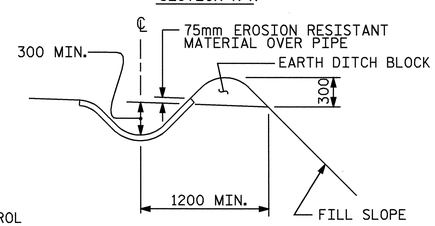

SECTION S-S

PLAN VIEW

TEMPORARY BERM AND SLOPE DRAIN DETAILS

(TO BE USED WHEN SHOULDER BEAM GUTTER IS REQUIRED)

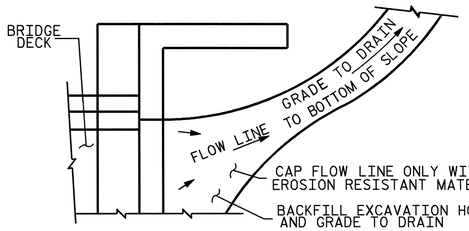

NOTE: IF THE APPROACH SLAB IS NOT CONSTRUCTED IMMEDIATELY AFTER THE BACKFILLING OF THE END BENT EXCAVATION, GRADE TO DRAIN TO THE BOTTOM OF THE SLOPE AND PROVIDE EROSION RESISTANT MATERIAL SUCH AS FIBERGLASS ROVING OR AS DIRECTED BY THE ENGINEER TO PREVENT SOIL EROSION AND TO PROTECT THE AREA ADJACENT TO THE STRUCTURE. THE CONTRACTOR WILL BE REQUIRED TO REMOVE THESE MATERIALS PRIOR TO CONSTRUCTION OF THE APPROACH SLAB.

TEMPORARY DRAINAGE DETAIL

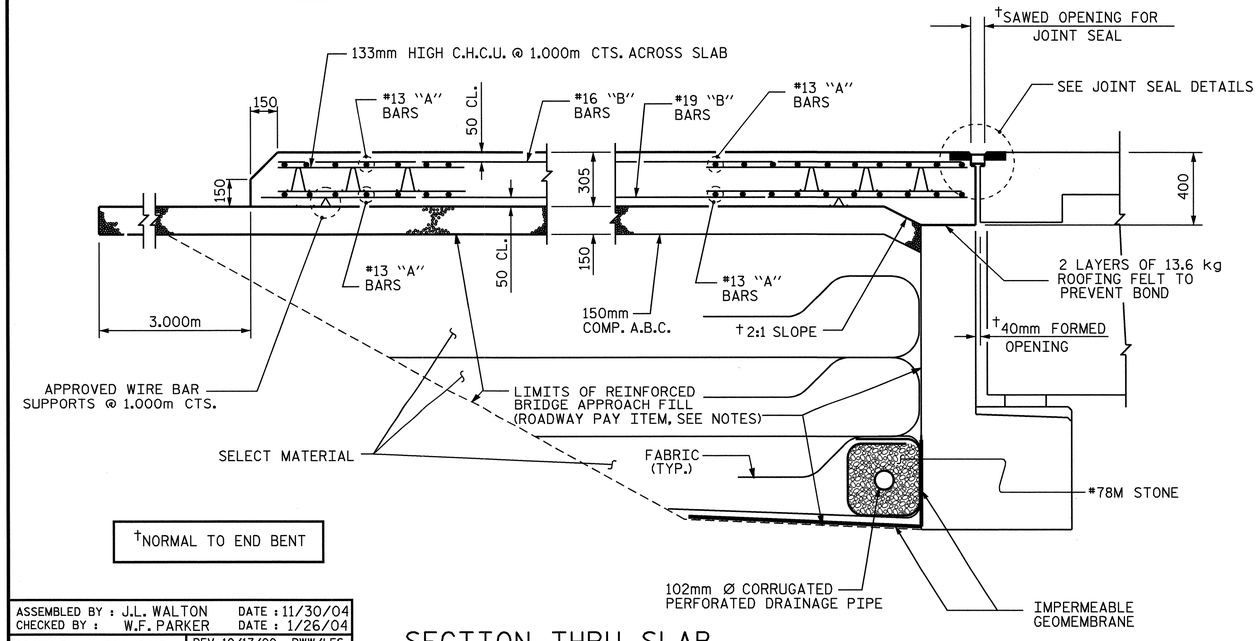

†NORMAL TO END BENT

SECTION THRU SLAB

NOTES

APPROACH SLAB SHALL NOT BE CONSTRUCTED PRIOR TO COMPLETION OF THE BRIDGE DECK.

FOR REINFORCED BRIDGE APPROACH FILL INCLUDING FABRIC, IMPERMEABLE GEOMEMBRANE, 102mm Ø DRAINAGE PIPE, #78M STONE, AND SELECT MATERIAL, SEE ROADWAY PLANS.

TEMPORARY DRAINAGE AND TEMPORARY BERM AND SLOPE DRAINS WILL BE PAID FOR UNDER THE LUMP SUM PRICE FOR BRIDGE APPROACH SLAB.

AREA BETWEEN THE WINGWALL AND APPROACH SLAB SHALL BE GRADED TO DRAIN THE WATER AWAY FROM THE FILL FACE OF THE BRIDGE AND SHALL BE PAVED. SEE ROADWAY PLANS.

THE 150mm COMP. A.B.C. SHALL EXTEND 3m BEYOND THE END OF THE APPROACH SLAB AND 300mm OUTSIDE OF EACH EDGE OF THE SLAB.

THE CONTRACTOR MAY USE 100mm TYPE B-25.0B ASPHALT CONCRETE COURSE IN LIEU OF 150mm COMP. A.B.C. IF THIS OPTION IS USED, THE BASE COURSE SHALL EXTEND 300mm BEYOND THE END OF THE APPROACH SLAB AND THE WIDTH SHALL BE THE SAME AS THAT OF THE APPROACH SLAB.

THE CONTRACTOR MAY USE 125mm CLASS "A" CONCRETE BASE IN LIEU OF 150mm COMP. A.B.C. IF THIS OPTION IS USED, THE CONCRETE BASE SHALL EXTEND 300mm BEYOND THE END OF THE APPROACH SLAB AND THE WIDTH SHALL BE THE SAME AS THAT OF THE APPROACH SLAB. THE CONCRETE SHALL BE FINISHED TO A SMOOTH SURFACE AND A LAYER OF 13.6 kg ROOFING FELT SHALL BE PLACED BETWEEN THE CONCRETE BASE AND THE APPROACH SLAB TO PREVENT BOND. THE APPROACH SLAB SHALL NOT BE CAST UNTIL THE CONCRETE BASE HAS REACHED AN AGE OF THREE CURING DAYS.

THE JOINT SHALL BE SAWED PRIOR TO THE CASTING OF THE PARAPET AND END POST.

THE NOMINAL UNCOMPRESSED SEAL WIDTH OF THE EVAZOTE JOINT SEAL AT END BENT 1 AND END BENT 2 SHALL BE 87mm. FOR EVAZOTE JOINT SEALS, SEE SPECIAL PROVISIONS.

FOR ELASTOMERIC CONCRETE, SEE SPECIAL PROVISIONS.

BILL OF MATERIAL

FOR 1 APPROACH SLAB (2 REQ'D)

BAR	NO.	SIZE	TYPE	LENGTH	WEIGHT
✱ A1	30	#13	STR	5720	171
A2	32	#13	STR	5700	181
✱ B1	72	#16	STR	4320	482
B2	72	#19	STR	4460	718
REINFORCING STEEL				kg.	899
✱ EPOXY COATED REINFORCING STEEL				kg.	653
CLASS AA CONCRETE				C.M.	15.6

ELASTOMERIC CONCRETE

END BENT	ELASTOMERIC CONCRETE ✱ (CU. m)
1	0.2
2	0.2
TOTAL	0.4

✱ BASED ON THE MINIMUM BLOCKOUT SHOWN.

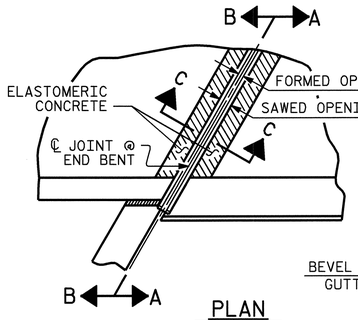

PLAN

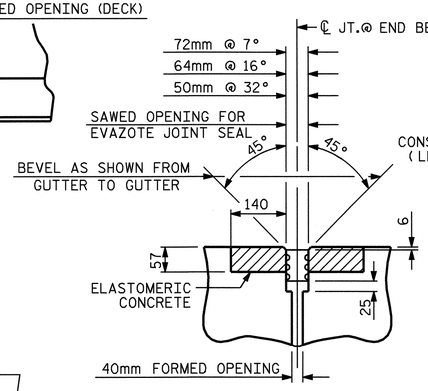

SECTION C-C
EVAZOTE JOINT SEAL

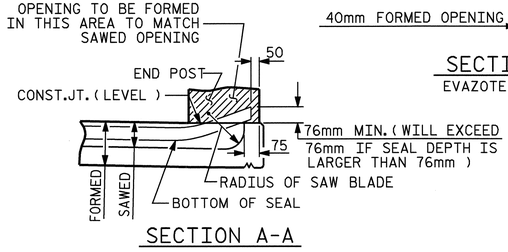

SECTION A-A

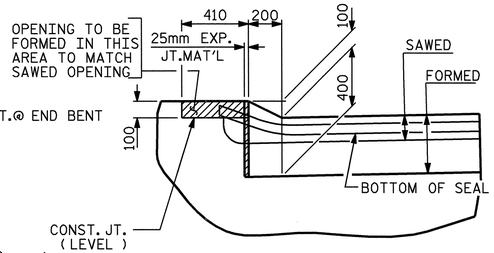

SECTION B-B

JOINT SEAL DETAILS @ END BENT

(FOR METAL RAILS WITH CURB)

PROJECT NO. R-0609IA

GUILFORD COUNTY

STATION: 28+77.454 -L-

SHEET 2 OF 2

STATE OF NORTH CAROLINA
DEPARTMENT OF TRANSPORTATION
RALEIGH

STANDARD
BRIDGE APPROACH SLAB FOR FLEXIBLE PAVEMENT

REVISIONS						SHEET NO.
NO.	BY:	DATE:	NO.	BY:	DATE:	S-74
1			3			TOTAL SHEETS
2			4			321

STR. #2 STD. NO. BAS4SM

ASSEMBLED BY : J.L. WALTON	DATE : 11/30/04	
CHECKED BY : W.F. PARKER	DATE : 1/26/04	
DRAWN BY : FCJ 6/87	REV. 10/17/00	RWW/LES
CHECKED BY : EGA 6/87	REV. 7/10/01	RWW/LES
	REV. 5/7/03R	RWW/JTE

15-MAY-2006 10:43
J:\STRUCT~1\frye\FINAL_~1\Str2\R-0609IA_sd_AS_02.dgn
rwwright

NORTH CAROLINA PROFESSIONAL SEAL 23926 ENGINEER BRIAN C. HANKS
5/22/06

F.A. PROJECT NO. : STP-NHF-119-1(15)

12+20 12+40 12+60 12+80 13+00

+1.9767% +0.4155%

GRADE DATA -Y3-

PI = 12+01.880 -Y3-
EL = 245.284
VC = 29.0m

SPAN A SPAN B

250 245 240 235

FILL FACE @ END BENT #1
STA. 12+26.944 -Y3-
GRADE POINT ELEV. = 245.388

APPROXIMATE NATURAL GROUND LINE

EL. 244.9±

300mm MIN. BERM
NORMAL TO CAP

EL. 245.2±

EXP.

5.226m MIN. VERT. CLEARANCE

FIX

5.543m MIN. VERT. CLEARANCE

FILL FACE @ END BENT #2
STA. 13+02.264 -Y3-
GRADE POINT ELEV. = 245.701

300mm MIN. BERM
NORMAL TO CAP

EL. 245.6±

EXP.

EL. 244.8± 450 (TYP.) EL. 245.2± EL. 245.2± EL. 245.4± EL. 245.3± EL. 245.4± EL. 245.5± EL. 245.7±

BOTTOM OF FOOTING
EL. 241.500

2:1 SLOPE
NORMAL TO CAP
(TYP.)

ROADWAY DETAIL & PAY ITEM (TYP.)

TOP OF FOOTING
EL. 235.800

100mm
CONCRETE SLOPE
PROTECTION (TYP.)

BOTTOM OF FOOTING
EL. 241.800

℄ PAVED DITCH
AND PI OF 1.829m VC
(ROADWAY DETAIL
& PAY ITEM) (TYP.)

END BENT #1 BENT #1 END BENT #2

SECTION ALONG -Y3-

(SECTIONS @ BENTS AND END BENTS ARE TAKEN AT RIGHT ANGLES.)

NAD 83

HORIZONTAL CURVE DATA -Y3-					
PIs	=10+57.869	PI STA.	=12+04.798	PIs	=13+39.787
θs	=3°16′26.6″	Δ	=41°47′6.7″(LT)	θs	=3°16′26.6″
Ls	=40.000m	L	=255.251m	Ls	=40.000m
LT	=26.671m	T	=133.600m	LT	=26.671m
ST	=13.337m	R	=350.000m	ST	=13.337m

HORIZONTAL CURVE DATA -L-					
PIs	=34+33.798	PI STA.	=38+86.951		
θs	=2°20′9.9″	Δ	=39°46′47.2″(RT)		
Ls	=95.000m	L	=808.846m		
LT	=63.339m	T	=421.492m		
ST	=31.672m	R	=1165.000m		

300mm BERM
EL. 242.581

FILL FACE
END BENT #1

W.P. #1
FILL FACE @ END BENT #1
STA. 12+26.944 -Y3-

100mm
CONCRETE
SLOPE
PROTECTION

TO SR 1156

BEGIN APPROACH SLAB
STA. 12+22.679 -Y3-

89°-53′-07″
(TAN TO CURVE)

820mm BERM
EL. 243.246

US 311

6.000m 6.000m

BENT #1
CONTROL
LINE

5.265m
HORIZ.
CLEAR.

4.500m
PAVED
SHLD.

10.800m
PAVEMENT

4.060m

TO I 85

W.P. #2
STA. 12+61.464 -Y3-
STA. 38+45.624 -L-

86°-24′-43″
(TAN TO CURVE)

1180mm BERM
EL. 242.888

W.P. #3
FILL FACE @ END BENT #2
STA. 13+02.264 -Y3-

END APPROACH SLAB
STA. 13+06.529 -Y3-

100mm
CONCRETE
SLOPE
PROTECTION

TO NC 62

90°-06′-53″
(TAN TO CURVE)

-Y3-

FILL FACE
END BENT #2

300mm BERM
EL. 243.553

4.060m 7.200m PAVEMENT 4.500m PAVED SHLD. 5.400m HORIZ. CLEAR.

℄ PAVED DITCH

TO SR 1158

US 311

℄ PAVED DITCH

-L-

34.520m (ARC LENGTH)
SPAN A

40.800m (ARC LENGTH)
SPAN B

75.320m (ARC LENGTH) (FILL FACE TO FILL FACE)

PLAN

(FOOTINGS AND COLUMNS ARE NOT SHOWN FOR CLARITY)

NORTH CAROLINA PROFESSIONAL SEAL 14991 ENGINEER PATRICK CHARLES HUNT 11/6/06

NORTH CAROLINA PROFESSIONAL SEAL 23710 ENGINEER VIPUL A. PATEL 11/7/06

DRAWN BY : A. K. PATEL DATE : 3/02/05
CHECKED BY : M. K. BEARD DATE : 03/05

07-NOV-2006 08:31
R:\Structures\FinalPlans\Str3\R0609IA_sd_GD_03.dgn
kbeard

PROJECT NO. R-0609IA

GUILFORD COUNTY

STATION: 12+61.464 -Y3-
38+45.624-L-

SHEET 1 OF 4 BRIDGE No. 972

STATE OF NORTH CAROLINA
DEPARTMENT OF TRANSPORTATION
RALEIGH

GENERAL DRAWING
FOR BRIDGE ON SR 1154
(KERSEY VALLEY RD)
OVER US 311
HIGH POINT EAST BELTWAY
BETWEEN SR 1156 AND NC 62

REVISIONS						SHEET NO.
NO.	BY:	DATE:	NO.	BY:	DATE:	S-75
1			3			TOTAL SHEETS
2			4			321

STR. #3

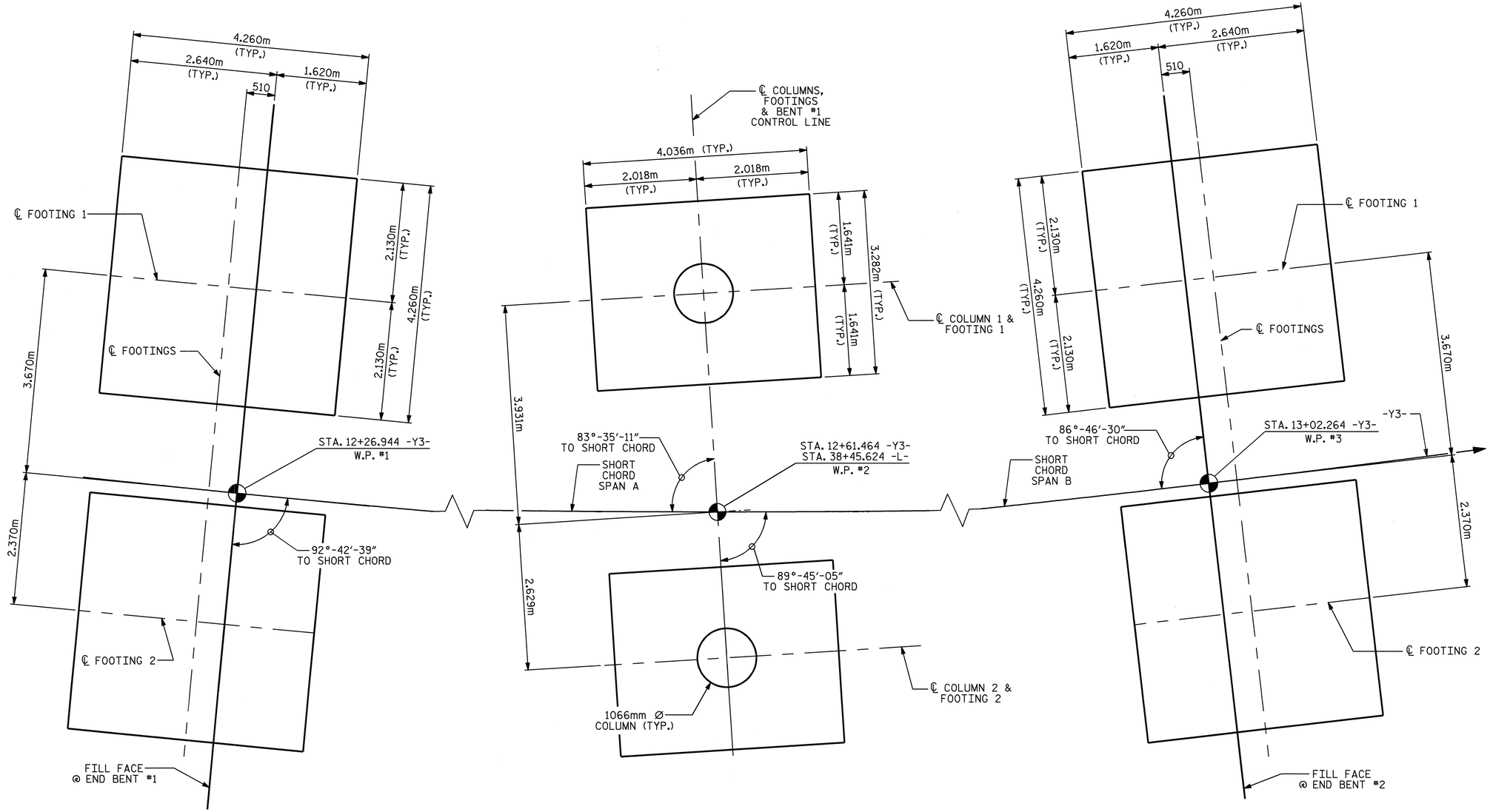

END BENT #1 | BENT #1 | END BENT #2

FOUNDATION LAYOUT

NOTES

THE REQUIRED BEARING CAPACITY OF THE SPREAD FOOTINGS AT END BENT 1 & END BENT 2 IS 380 kPa. THE REQUIRED BEARING CAPACITY SHALL BE VERIFIED.

THE REQUIRED BEARING CAPACITY OF THE SPREAD FOOTINGS AT BENT 1 IS 480 kPa. THE REQUIRED BEARING CAPACITY SHALL BE VERIFIED.

NORTH CAROLINA PROFESSIONAL SEAL 23371 ENGINEER VIPUL A. PATEL
5/22/06

PROJECT NO. R-0609IA
GUILFORD COUNTY
STATION: 12+61.464 -Y3-
38+45.624 -L-
SHEET 2 OF 4

STATE OF NORTH CAROLINA
DEPARTMENT OF TRANSPORTATION
RALEIGH

GENERAL DRAWING
FOR BRIDGE ON SR 1154
(KERSEY VALLEY RD)
OVER US 311
HIGH POINT EAST BELTWAY
BETWEEN SR 1156 AND NC 62

REVISIONS						SHEET NO.
NO.	BY:	DATE:	NO.	BY:	DATE:	S-76
1			3			TOTAL SHEETS
2			4			321

DRAWN BY : A. K. PATEL DATE : 3/02/05
CHECKED BY : M. K. BEARD DATE : 03/05

22-MAY-2006 08:02
T:\Structures\Final Plans\Str3\R0609IA_sd_GD_03.dgn
klayne

STR. #3

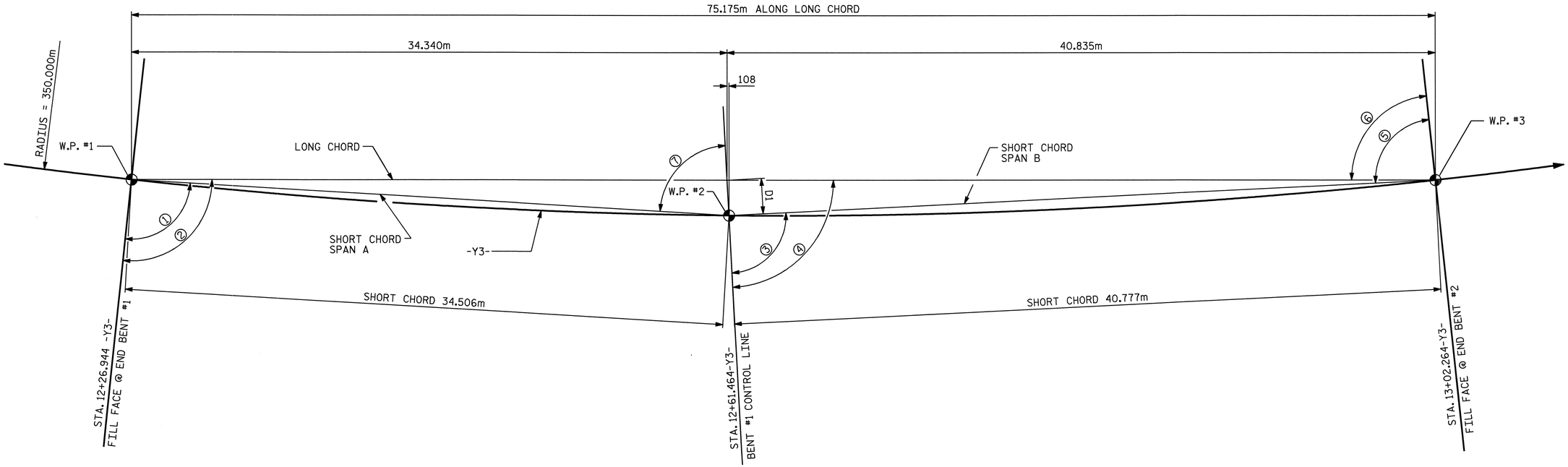

LONG CHORD LAYOUT

OFFSET

D1 = 2.013m

ANGLES

① = 92°-42'-39"
② = 96°-03'-02"
③ = 89°-45'-05"
④ = 86°-55'-33"
⑤ = 86°-46'-30"
⑥ = 83°-56'-58"
⑦ = 83°-35'-11"

PROJECT NO. R-0609IA

GUILFORD COUNTY

STATION: 12+61.464 -Y3-

38+45.624-L-

SHEET 3 OF 4

NORTH CAROLINA PROFESSIONAL SEAL 23371 ENGINEER VIPUL A. PATEL
5/22/06

STATE OF NORTH CAROLINA
DEPARTMENT OF TRANSPORTATION
RALEIGH

GENERAL DRAWING
FOR BRIDGE ON SR 1154
(KERSEY VALLEY RD)
OVER US 311
HIGH POINT EAST BELTWAY
BETWEEN SR 1156 AND NC 62

REVISIONS						SHEET NO.
NO.	BY:	DATE:	NO.	BY:	DATE:	S-77
1			3			TOTAL SHEETS
2			4			321

DRAWN BY : A. K. PATEL DATE : 3/21/05
CHECKED BY : M. K. BEARD DATE : 03/05

22-MAY-2006 08:02
T:\Structures\Final Plans\Str3\R0609IA_sd_GD_03.dgn
klayne

STR. #3

BENCH MARK IS R/R SPIKE IN 330 mm RED OAK 101.0m LEFT, STA. 35+25.000 -BL-, ELEV. 241.865

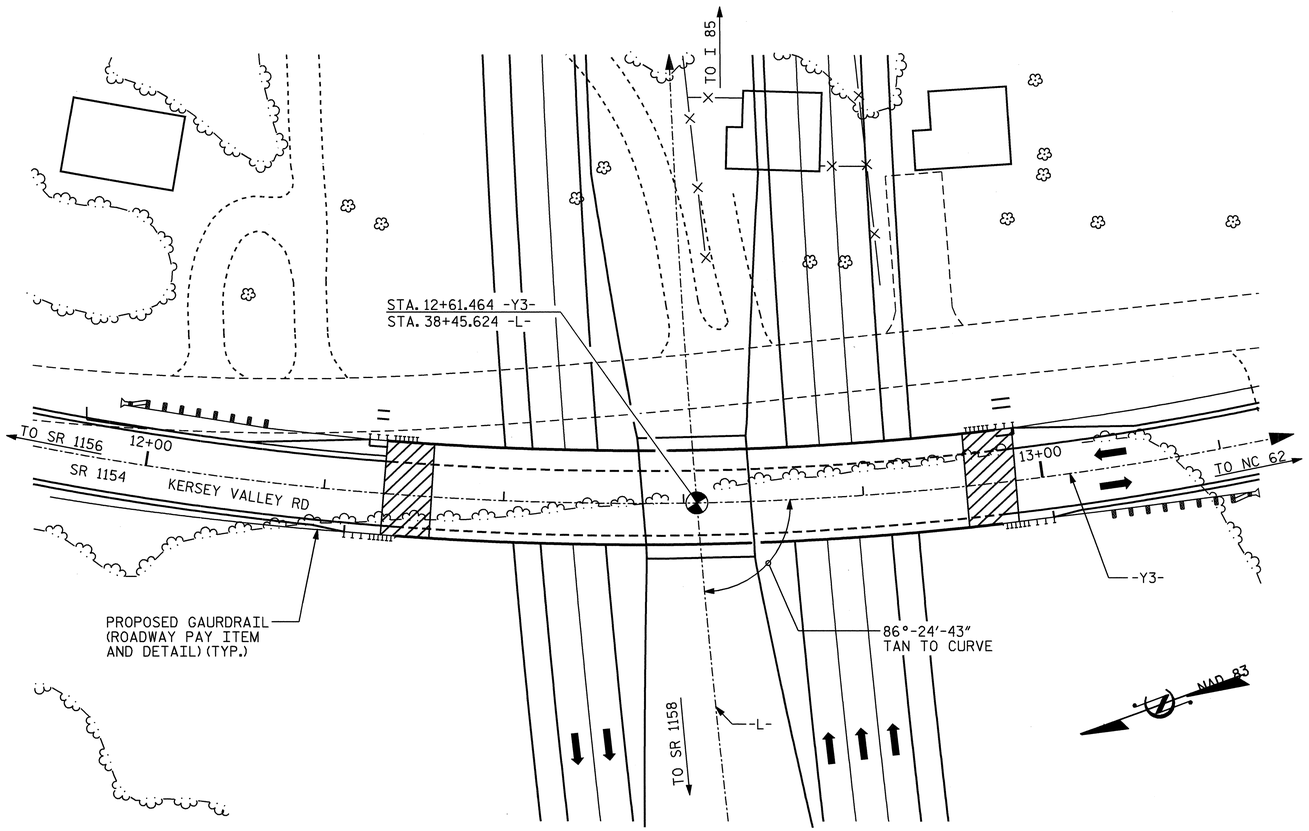

NOTE: FOR UTILITY INFORMATION, SEE UTILITY PLANS AND SPECIAL PROVISIONS.

LOCATION SKETCH

NOTES

ALL DIMENSIONS ARE IN MILLIMETERS UNLESS OTHERWISE NOTED.

ALL ELEVATIONS ARE IN METERS.

ASSUMED LIVE LOAD = MS 18 OR ALTERNATE LOADING.

THIS BRIDGE HAS BEEN DESIGNED IN ACCORDANCE WITH THE REQUIREMENTS OF THE AASHTO STANDARD SPECIFICATIONS FOR SEISMIC DESIGN OF HIGHWAY BRIDGES FOR SEISMIC PERFORMANCE CATEGORY A.

FOR OTHER DESIGN DATA AND GENERAL NOTES, SEE SHEET SNSM.

THIS BRIDGE HAS BEEN DESIGNED BY THE STRENGTH DESIGN METHOD AS SPECIFIED IN AASHTO STANDARD SPECIFICATIONS.

ALL STRUCTURAL STEEL SHALL BE AASHTO M270 GRADE 345W AND PAINTED IN ACCORDANCE WITH SYSTEM 4 OF ARTICLE 442-7 OF THE STANDARD SPECIFICATIONS UNLESS OTHERWISE NOTED ON THE PLANS.

REMOVABLE FORMS MAY BE USED IN LIEU OF METAL STAY-IN-PLACE FORMS IN ACCORDANCE WITH ARTICLE 420-3 OF THE STANDARD SPECIFICATIONS.

WORK SHALL NOT BE STARTED ON THIS BRIDGE UNTIL ROADWAY SECTION HAS BEEN EXCAVATED.

THE CLASS AA CONCRETE IN THE BRIDGE DECK SHALL CONTAIN FLY ASH OR GROUND GRANULATED BLAST FURNACE SLAG AT THE SUBSTITUTION RATE SPECIFIED IN ARTICLE 1024-1 AND IN ACCORDANCE WITH ARTICLES 1024-5 AND 1024-6 OF THE STANDARD SPECIFICATIONS. NO PAYMENT WILL BE MADE FOR THIS SUBSTITUTION AS IT IS CONSIDERED INCIDENTAL TO THE COST OF THE REINFORCED CONCRETE DECK SLAB.

THE CONTRACTOR SHALL PROVIDE INDEPENDENT ASSURANCE SAMPLES OF REINFORCING STEEL AS FOLLOWS: FOR PROJECTS REQUIRING UP TO 360,000 kg OF REINFORCING STEEL, ONE 760mm SAMPLE OF EACH SIZE BAR USED, AND FOR PROJECTS REQUIRING OVER 360,000 kg OF REINFORCING STEEL, TWO 760mm SAMPLES OF EACH SIZE BAR USED. THE BARS FROM WHICH THE SAMPLES ARE TAKEN MUST THEN BE SPLICED WITH REPLACEMENT BARS OF THE SIZE AND LENGTH OF THE SAMPLE PLUS A MINIMUM LAP SPLICE OF THIRTY BAR DIAMETERS.

NEEDLE BEAMS WILL NOT BE ALLOWED UNLESS OTHERWISE CALLED FOR ON THE PLANS OR APPROVED BY THE ENGINEER.

FOR SUBMITTAL OF WORKING DRAWINGS, SEE SPECIAL PROVISIONS.

FOR METRIC STRUCTURAL STEEL, SEE SPECIAL PROVISIONS.

FOR FALSEWORK AND FORMWORK, SEE SPECIAL PROVISIONS.

FOR CRANE SAFETY, SEE SPECIAL PROVISIONS.

TOTAL BILL OF MATERIAL

	FOUNDATION EXCAVATION	REINFORCED CONCRETE DECK SLAB	GROOVING BRIDGE FLOORS	CLASS A CONCRETE	BRIDGE APPROACH SLABS	REINFORCING STEEL	SPIRAL COLUMN REINFORCING STEEL	STRUCTURAL STEEL (APPROX.)	TWO BAR METAL RAIL	355mm X 915mm CONCRETE PARAPET	100mm SLOPE PROTECTION	POT BEARINGS	EVAZOTE JOINT SEALS
	LUMP SUM	SQ. METERS	SQ. METERS	CU. METERS	LUMP SUM	kg	kg	kg	METERS	METERS	SQ. METERS	LUMP SUM	LUMP SUM
SUPERSTRUCTURE		843.6	863.6		LUMP SUM			179200	144.5	149.0		LUMP SUM	LUMP SUM
END BENT #1	LUMP SUM			58.9		3039					149		
BENT #1	LUMP SUM			55.4		4427	511						
END BENT #2	LUMP SUM			58.5		3042					196		
TOTAL	LUMP SUM	843.6	863.6	172.8	LUMP SUM	10508	511	179200	144.5	149.0	345	LUMP SUM	LUMP SUM

PROJECT NO. R-0609IA
GUILFORD COUNTY
STATION: 12+61.464 -Y3-
38+45.624 -L-
SHEET 4 OF 4

NORTH CAROLINA PROFESSIONAL SEAL 23371 ENGINEER VIPUL A. PATEL
5/22/06

STATE OF NORTH CAROLINA
DEPARTMENT OF TRANSPORTATION
RALEIGH

GENERAL DRAWING
FOR BRIDGE ON SR 1154
(KERSEY VALLEY RD)
OVER US 311
HIGH POINT EAST BELTWAY
BETWEEN SR 1156 AND NC 62

REVISIONS						SHEET NO.
NO.	BY:	DATE:	NO.	BY:	DATE:	S-78
1			3			TOTAL SHEETS
2			4			321

DRAWN BY : A. K. PATEL DATE : 3/02/05
CHECKED BY : M. K. BEARD DATE : 03/05

22-MAY-2006 08:02
T:\Structures\Final Plans\Str3\R0609IA_sd_GD_03.dgn
klayne

STR. #3

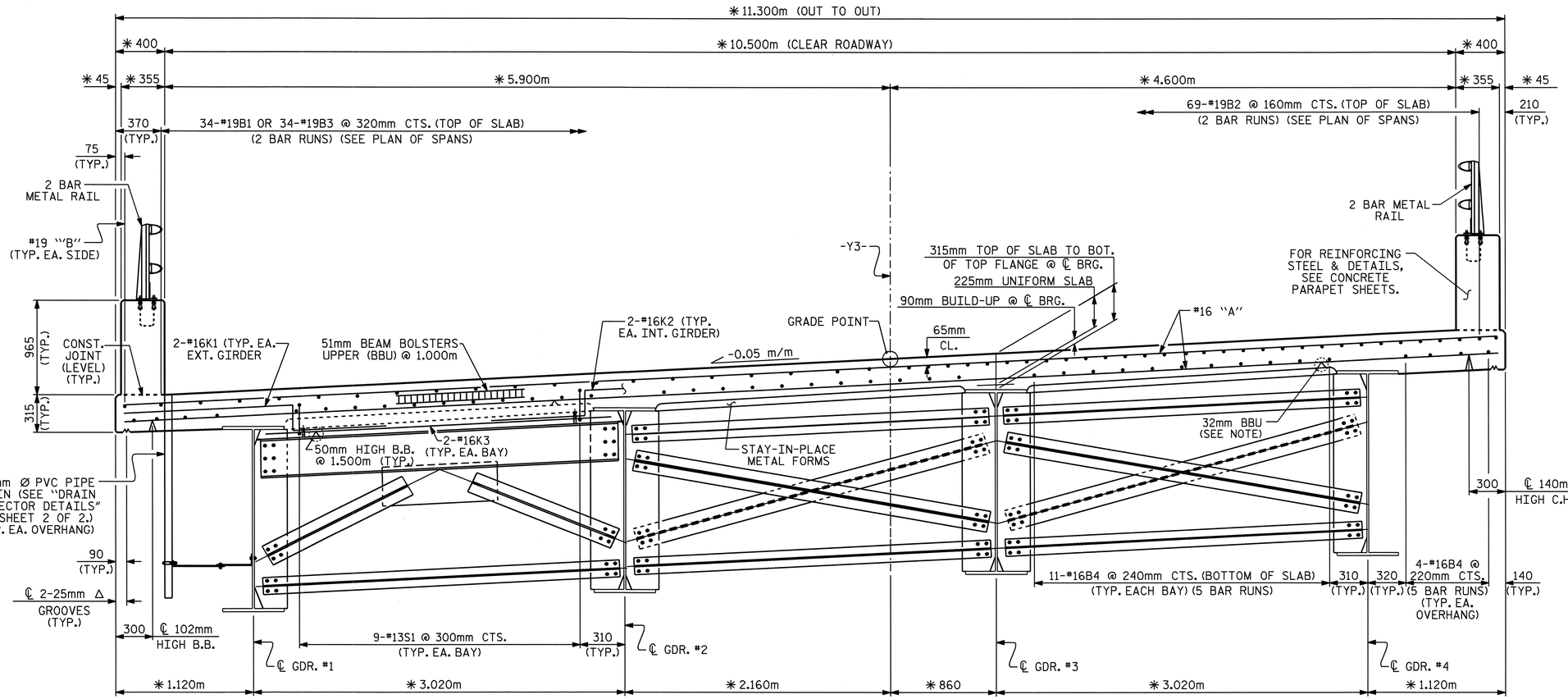

TYPICAL END BENT DIAPHRAGM

TYPICAL BENT AND INTERMEDIATE DIAPHRAGM

TYPICAL SECTION

✳RADIAL DIMENSIONS

NOTES

PROVIDE 32mm HIGH BEAM BOLSTERS UPPER AT 1.200m CTS. ATOP THE METAL STAY-IN-PLACE FORMS TO SUPPORT THE BOTTOM MAT OF 'A' BARS. WHEN USING REMOVABLE FORMS, PROVIDE CONTINUOUS HIGH CHAIRS FOR METAL DECK (C.H.C.M.) @ 1.200m CTS. WITH A HEIGHT TO SUPPORT THE BOTTOM MAT OF 'A' BARS A CLEAR DISTANCE OF 65mm ABOVE THE TOP OF THE REMOVABLE FORM.

METAL STAY-IN-PLACE FORMS SHALL NOT BE WELDED TO BEAM OR GIRDER FLANGES IN THE ZONES REQUIRING CHARPY V-NOTCH TEST. SEE STRUCTURAL STEEL DETAIL.

PREVIOUSLY CAST CONCRETE IN A CONTINUOUS UNIT SHALL HAVE ATTAINED A MINIMUM COMPRESSIVE STRENGTH OF 21 MPa BEFORE ADDITIONAL CONCRETE IS CAST IN THE UNIT.

STRUCTURAL STEEL ERECTION IN A CONTINUOUS UNIT SHALL BE COMPLETE BEFORE FALSEWORK OR FORMS ARE PLACED ON THE UNIT.

#16G1 BARS MAY BE SHIFTED SLIGHTLY AS NECESSARY TO CLEAR REINFORCING STEEL AND STIRRUPS.

THE CONTRACTOR MAY, WHEN NECESSARY, PROPOSE A SCHEME FOR AVOIDING INTERFERENCE BETWEEN METAL STAY-IN-PLACE FORM SUPPORTS OR FORMS AND GIRDER STIFFENER OR CONNECTOR PLATES. THE PROPOSAL SHALL BE INDICATED, AS APPROPRIATE, ON EITHER THE STEEL WORKING DRAWINGS OR THE METAL STAY-IN- PLACE FORM WORKING DRAWINGS.

PARAPET IN A CONTINUOUS UNIT SHALL NOT BE CAST UNTIL ALL SLAB CONCRETE IN THE UNIT HAS BEEN CAST AND HAS REACHED A MINIMUM COMPRESSIVE STRENGTH OF 20.7 MPa.

THE CONTRACTOR SHALL ADJUST THE GIRDER BUILDUPS AS NECESSARY TO INCORPORATE A MAXIMUM PERMISSABLE VARIATION IN POT BEARING DEPTH OF 13mm, SEE SPECIAL PROVISION FOR POT BEARINGS.

PROJECT NO. R-0609IA

GUILFORD COUNTY

STATION: 38+45.624-L-

SHEET 1 OF 2

STATE OF NORTH CAROLINA
DEPARTMENT OF TRANSPORTATION
RALEIGH

SUPERSTRUCTURE
TYPICAL SECTION

NORTH CAROLINA PROFESSIONAL SEAL 23371 ENGINEER VIPUL A. PATEL
5/22/06

REVISIONS						SHEET NO.
NO.	BY:	DATE:	NO.	BY:	DATE:	S-79
1			3			TOTAL SHEETS
2			4			321

DRAWN BY : J.P. ADAMS DATE : 12/14/04
CHECKED BY : M.K. BEARD DATE : 2/05

22-MAY-2006 08:03
T:\Structures\Final Plans\Str3\R-0609IA_sd_TS_03.dgn
klayne

STR. #3

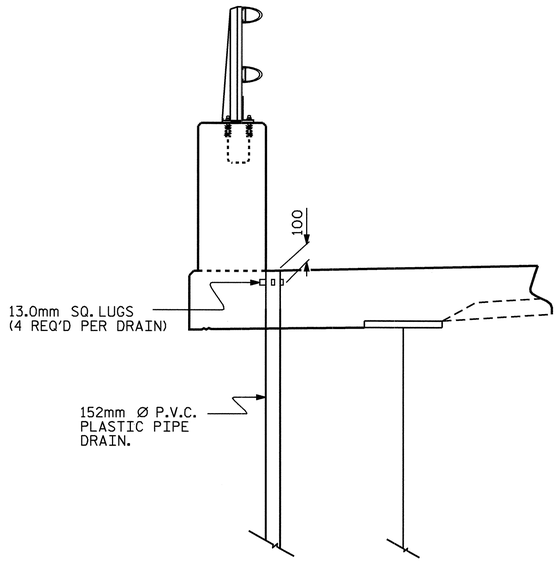

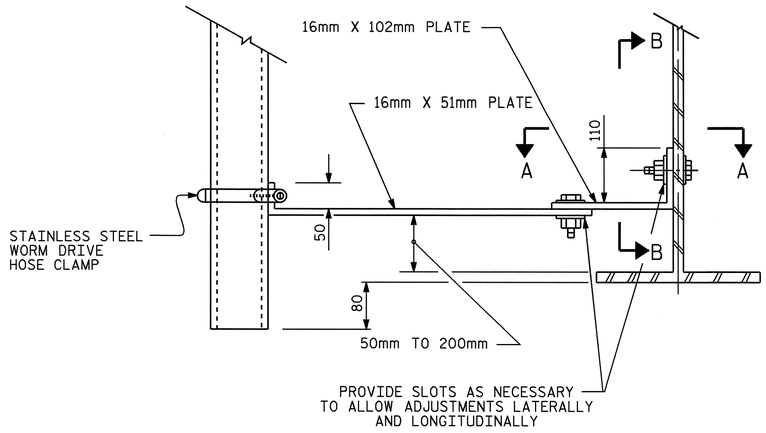

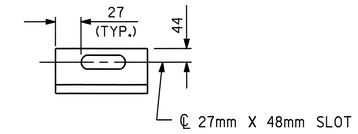

SECTION B-B

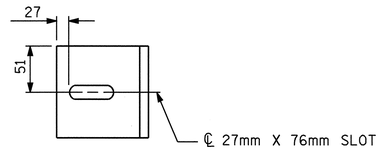

SECTION A-A

NOTES:

BOLT SIZE FOR PIPE DRAIN BRACKETS TO BE SAME AS DIAPHRAGMS AND CROSSFRAME CONNECTIONS. STAINLESS STEEL WORM DRIVE HOSE CLAMP SHALL BE COMMERCIAL QUALITY.

PLATES FOR PIPE DRAIN BRACKETS SHALL CONFORM TO AASHTO M270 GRADE 250 STEEL OR APPROVED EQUAL.

PVC DECK DRAINS SHALL BE PAINTED WITH TWO COATS OF BROWN PRIMER MEETING THE REQUIREMENTS OF ARTICLE 1080-12 OF THE STANDARD SPECIFICATIONS. EACH COAT SHALL BE 0.050mm THICK. DECK DRAINS SHALL BE ROUGHENED PRIOR TO PAINTING. NO SEPARATE PAYMENT SHALL BE MADE FOR PAINTING PVC DECK DRAINS AS THIS IS CONSIDERED INCIDENTAL TO THE PAY ITEM FOR REINFORCED CONCRETE DECK SLAB.

TOP OF FLOOR DRAIN TO BE SET 10mm BELOW SURFACE OF SLAB.

4 - 13mm SQUARE LUGS TO BE GLUED TO THE PVC PLASTIC PIPE AT EQUAL SPACES AROUND THE PIPE DRAIN APPROXIMATELY 100mm FROM THE TOP OF THE PIPE.

COUPLING IN DRAIN PIPE WILL BE PERMITTED AS APPROVED BY THE ENGINEER.

THE 152mm DIA. PVC PIPE AND FITTINGS SHALL BE SCHEDULE 40 AND CONFORM TO ASTM D1785.

DRAIN CONNECTOR DETAILS

(9 ASSEMBLIES REQUIRED)

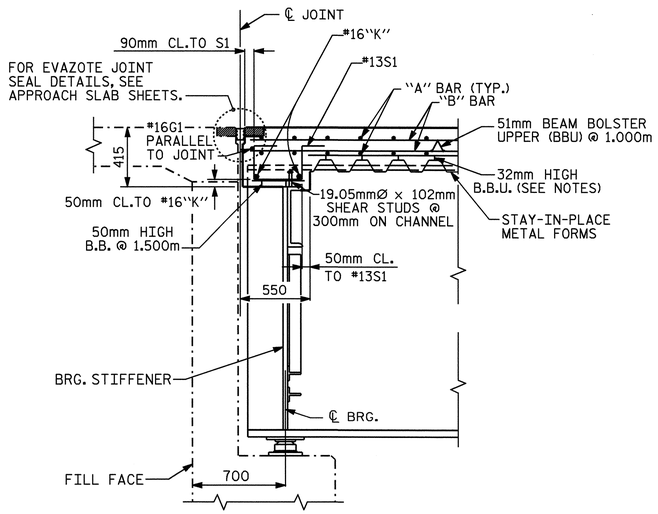

SECTION AT END BENT

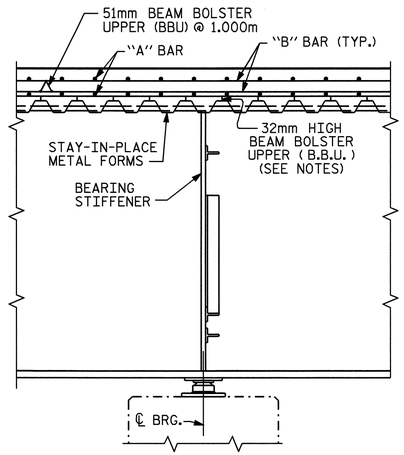

SECTION AT BENT

PROJECT NO. R-0609IA

GUILFORD COUNTY

STATION: 38+45.624 -L-

SHEET 2 OF 2

STATE OF NORTH CAROLINA
DEPARTMENT OF TRANSPORTATION
RALEIGH

SUPERSTRUCTURE

TYPICAL SECTION

REVISIONS						SHEET NO.
NO.	BY:	DATE:	NO.	BY:	DATE:	S-80
1			3			TOTAL SHEETS
2			4			321

NORTH CAROLINA PROFESSIONAL SEAL 23371 ENGINEER VIPUL A. PATEL 5/22/06

DRAWN BY : J.P. ADAMS DATE : 12/14/04
CHECKED BY : M.K. BEARD DATE : 2/05

22-MAY-2006 08:04
T:\Structures\Final Plans\Str3\R-0609IA_sd_TS_03.dgn
klayne

STR. #3

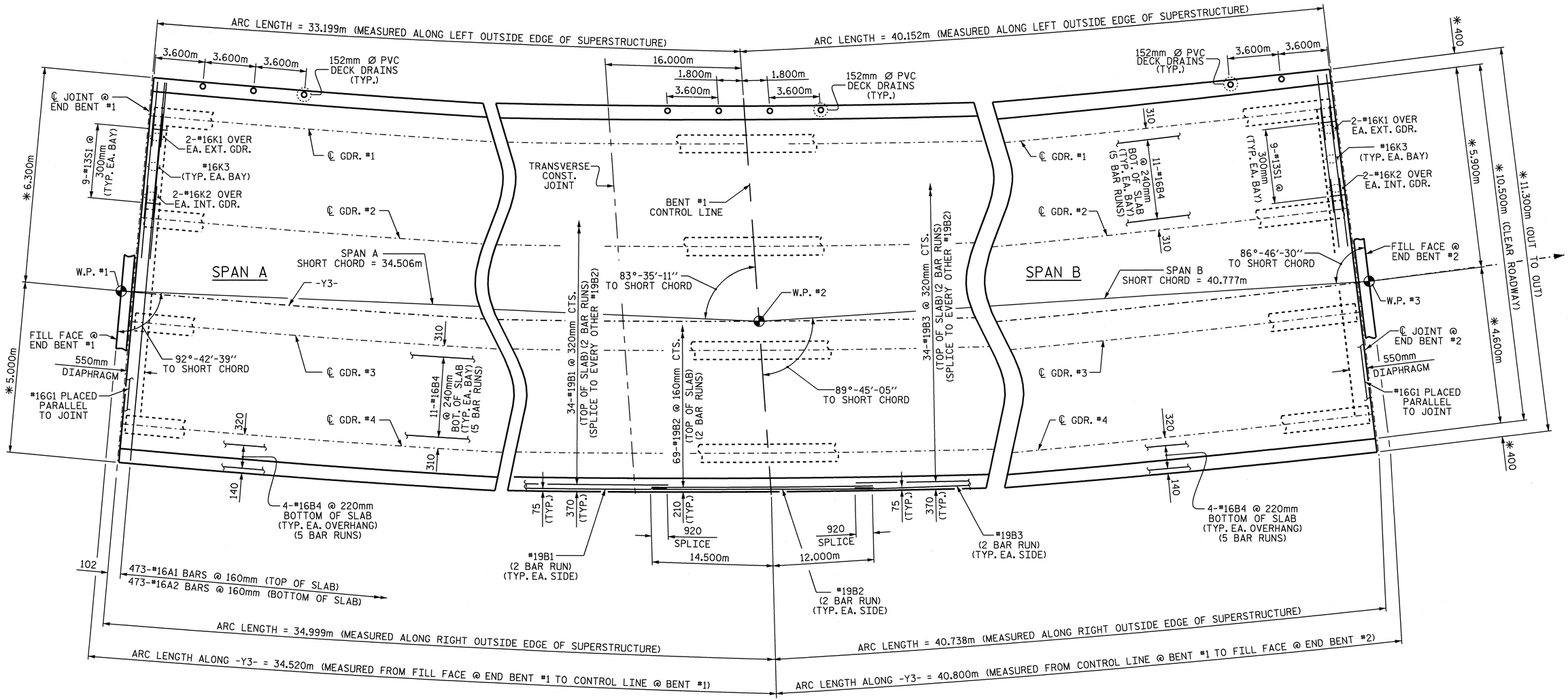

PLAN OF SPAN A

PLAN OF SPAN B

*RADIAL DIMENSIONS

NOTES

FOR SECTION @ END BENT AND SECTION @ BENT, SEE "TYPICAL SECTION" SHEET.

#16 "A" BARS ARE TO BE PLACED RADIALLY ALONG OUTSIDE RIGHT EDGE OF SUPERSTRUCTURE.

FOR REINFORCING STEEL AND DETAILS IN PARAPET, SEE "PARAPET DETAILS" SHEET.

FOR POUR SEQUENCE, SEE "SUPERSTRUCTURE BILL OF MATERIAL" SHEET.

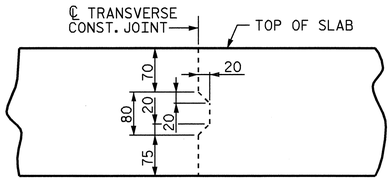

TRANSVERSE CONSTRUCTION JOINT DETAIL

NOTE: REINFORCING STEEL IN SLAB NOT SHOWN.
LONGITUDINAL REINFORCING STEEL SHALL BE CONTINUOUS THRU JOINT.

PROJECT NO. R-0609IA

GUILFORD COUNTY

STATION: 38+45.624 -L-

STATE OF NORTH CAROLINA
DEPARTMENT OF TRANSPORTATION
RALEIGH

SUPERSTRUCTURE

PLAN OF SPANS

NORTH CAROLINA PROFESSIONAL SEAL 23371 ENGINEER VIPUL A. PATEL 11/16/06

REVISIONS						SHEET NO.
NO.	BY:	DATE:	NO.	BY:	DATE:	S-81
1			3			TOTAL SHEETS
2			4			321

STR. #3

DRAWN BY : J.P. ADAMS DATE : 2/10/05
CHECKED BY : M.K. BEARD DATE : 2/05

16-NOV-2006 08:02
R:\Structures\Final Plans\Str3\R-0609IA_sd_A0_03.dgn
lbadams

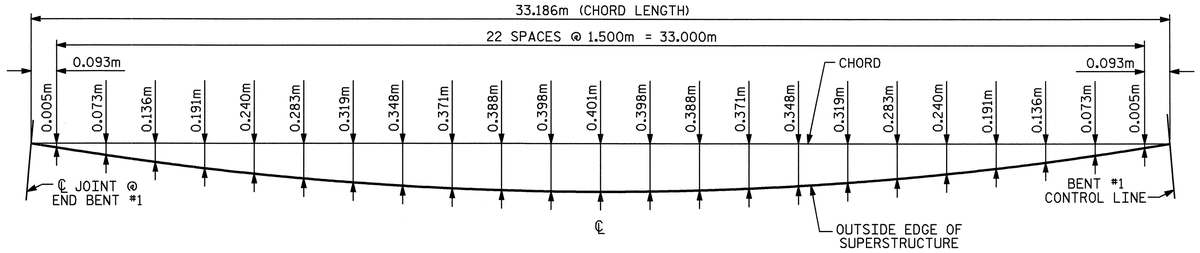

ARC OFFSETS SPAN A
LEFT OUTSIDE EDGE OF SUPERSTRUCTURE

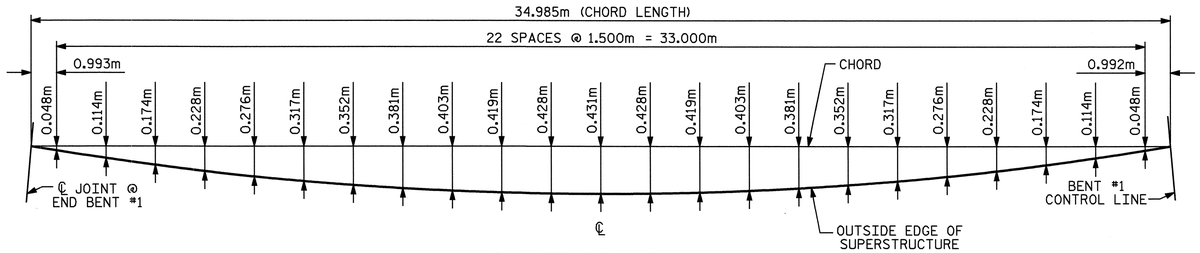

ARC OFFSETS SPAN A
RIGHT OUTSIDE EDGE OF SUPERSTRUCTURE

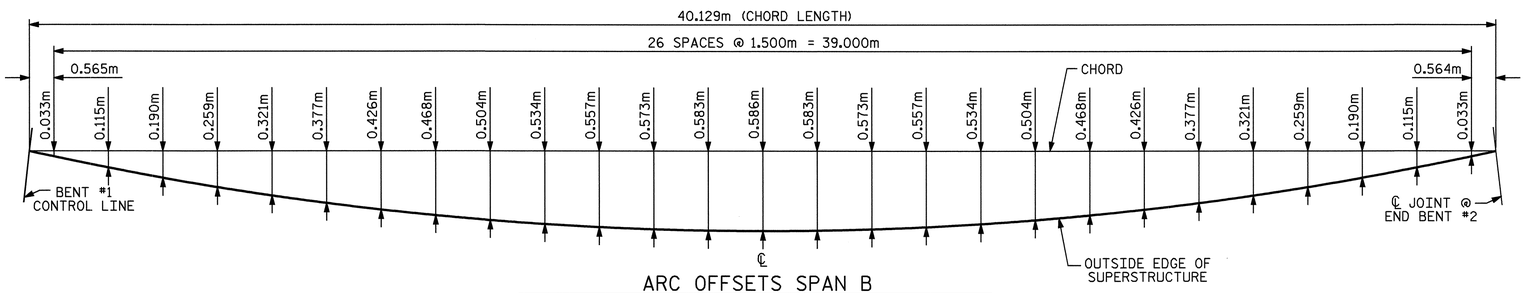

ARC OFFSETS SPAN B
LEFT OUTSIDE EDGE OF SUPERSTRUCTURE

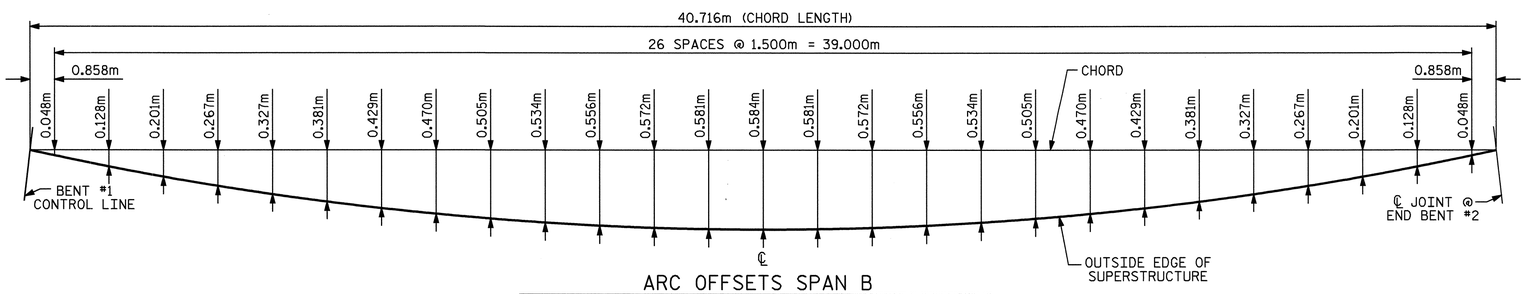

ARC OFFSETS SPAN B
RIGHT OUTSIDE EDGE OF SUPERSTRUCTURE

NORTH CAROLINA PROFESSIONAL SEAL 23371 ENGINEER VIPUL A. PATEL
5/22/06

PROJECT NO. R-0609IA
GUILFORD COUNTY
STATION 38+45.624-L-

STATE OF NORTH CAROLINA
DEPARTMENT OF TRANSPORTATION
RALEIGH

SUPERSTRUCTURE

ARC OFFSETS

REVISIONS						SHEET NO.
NO.	BY:	DATE:	NO.	BY:	DATE:	S-82
1			3			TOTAL SHEETS
2			4			321

STR. #3

DRAWN BY : J.P. ADAMS DATE : 2/10/05
CHECKED BY : M.K. BEARD DATE : 2/05

22-MAY-2006 08:00
T:\Structures\Final Plans\Str3\R-0609IA_sd_A0_03.dgn
klayne

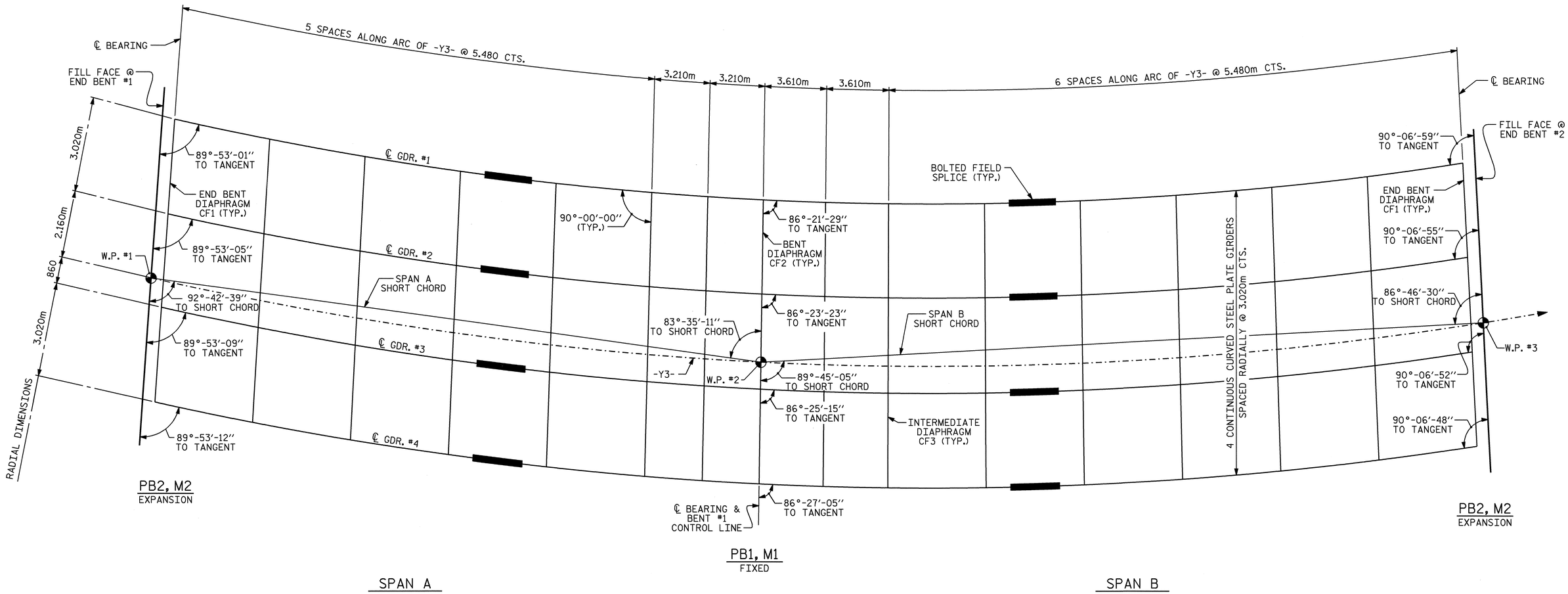

FRAMING PLAN

ALL DIAPHRAGMS ARE PLACED RADIALLY TO ℄ GIRDER EXCEPT @ BENT #1

PROJECT NO. R-0609IA

GUILFORD COUNTY

STATION: 38+45.624-L-

NORTH CAROLINA PROFESSIONAL SEAL 23371 ENGINEER VIPUL A. PATEL
5/22/06

STATE OF NORTH CAROLINA
DEPARTMENT OF TRANSPORTATION
RALEIGH

SUPERSTRUCTURE

FRAMING PLAN

REVISIONS						SHEET NO.
NO.	BY:	DATE:	NO.	BY:	DATE:	S-83
1			3			TOTAL SHEETS
2			4			321

DRAWN BY : J.P. ADAMS DATE : 1/21/05
CHECKED BY : M.K. BEARD DATE : 2/05

22-MAY-2006 08:02
T:\Structures\Final Plans\Str3\R-0609IA_sd_FP_03.dgn
klayne

STR. #3

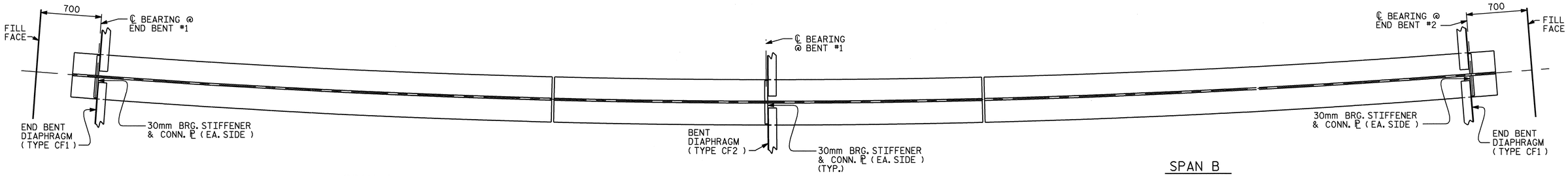

SPAN A

SPAN B

CURVED GIRDER BOTTOM FLANGE DETAIL

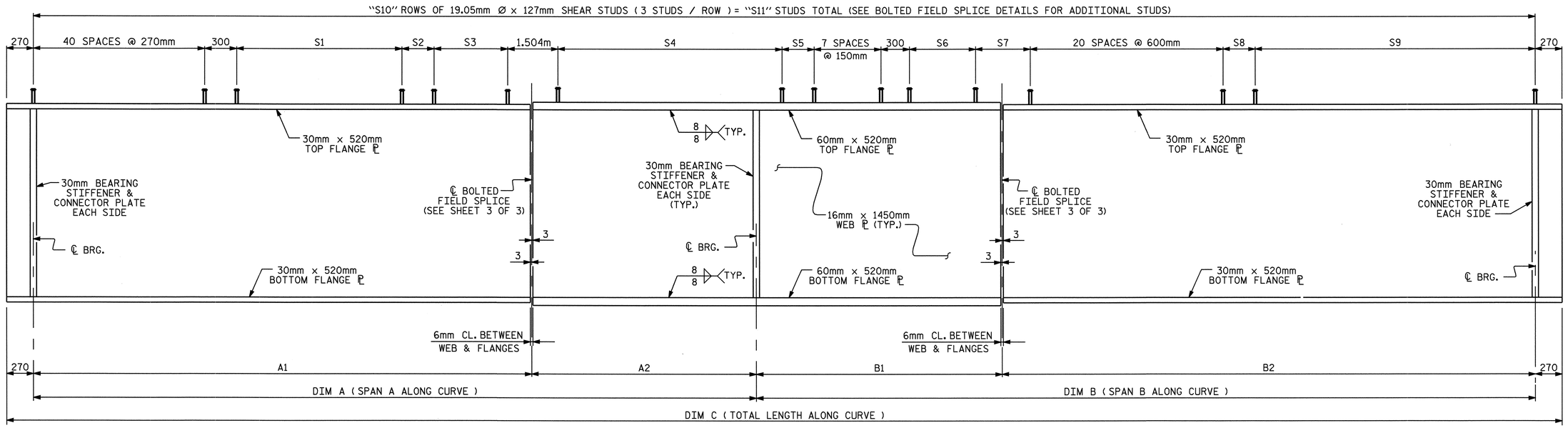

CURVED GIRDER ELEVATION

SHEAR STUD SPACING TABLE

GDR.#	S1	S2	S3	S4	S5	S6	S7	S8	S9	S10	S11
1	32 SPA. @ 300mm	300mm	6 SPA. @ 150mm	32 SPA. @ 600mm	162mm	5 SPA. @ 300mm	1504mm	206mm	45 SPA. @ 300mm	195	585
2	32 SPA. @ 300mm	109mm	6 SPA. @ 150mm	33 SPA. @ 600mm	307mm	5 SPA. @ 300mm	1504mm	290mm	45 SPA. @ 300mm	196	588
3	31 SPA. @ 300mm	362mm	5 SPA. @ 150mm	34 SPA. @ 600mm	191mm	6 SPA. @ 300mm	1545mm	300mm	45 SPA. @ 300mm	196	588
4	31 SPA. @ 300mm	170mm	5 SPA. @ 150mm	35 SPA. @ 600mm	305mm	6 SPA. @ 300mm	1504mm	156mm	46 SPA. @ 300mm	198	594

GIRDER DIMENSIONS

GDR.#	RADIUS	A1	A2	B1	B2	DIM A	DIM B	DIM C
1	344.820m	22.652m	10.343m	13.373m	26.458m	32.995m	39.831m	73.366m
2	347.840m	22.461m	11.015m	13.446m	26.542m	33.476m	39.988m	74.004m
3	350.860m	22.264m	11.693m	13.522m	26.623m	33.957m	40.145m	74.642m
4	353.880m	22.072m	12.366m	13.593m	26.708m	34.438m	40.301m	75.279m

NOTE : ALL GIRDER DIMENSIONS IN THE ABOVE TABLE ARE MEASURED ALONG ℄ OF GIRDER.

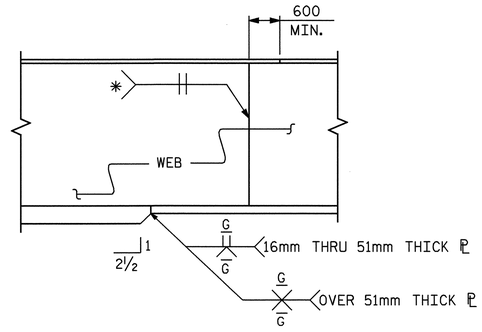

TYPICAL FLANGE AND WEB BUTT JOINT

*GRIND SMOOTH AND FLUSH ON OUTER FACE OF EXTERIOR GIRDERS

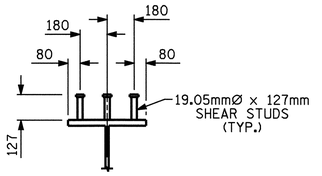

SHEAR STUD DETAILS

PROJECT NO. R-0609IA

GUILFORD COUNTY

STATION 38+45.624-L-

SHEET 1 OF 3

NORTH CAROLINA PROFESSIONAL SEAL 23371 ENGINEER VIPUL A. PATEL 5/22/06

STATE OF NORTH CAROLINA
DEPARTMENT OF TRANSPORTATION
RALEIGH

SUPERSTRUCTURE

STRUCTURAL STEEL DETAILS

REVISIONS						SHEET NO.
NO.	BY:	DATE:	NO.	BY:	DATE:	S-84
1			3			TOTAL SHEETS
2			4			321

DRAWN BY : J.P. ADAMS DATE : 1/12/05
CHECKED BY : M.K. BEARD DATE : 2/05

22-MAY-2006 08:03
T:\Structures\Final Plans\Str3\R-0609IA_sd_SS_03.dgn
klayne

STR. #3

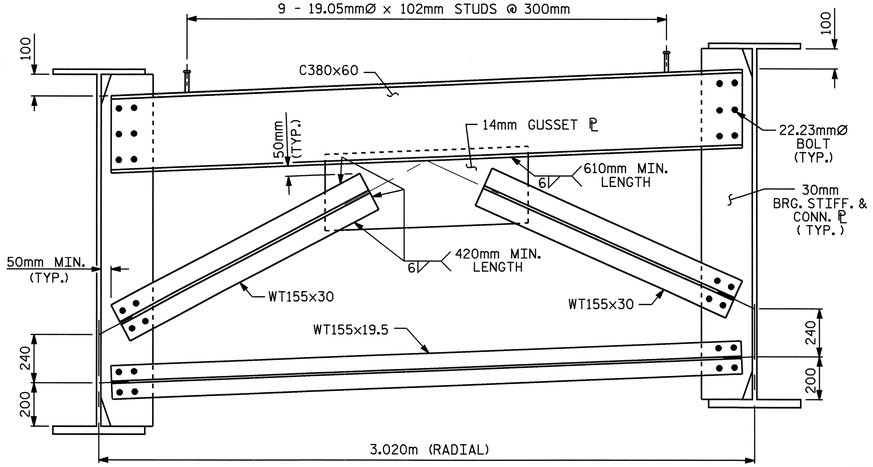

END BENT DIAPHRAGM

(CF1)

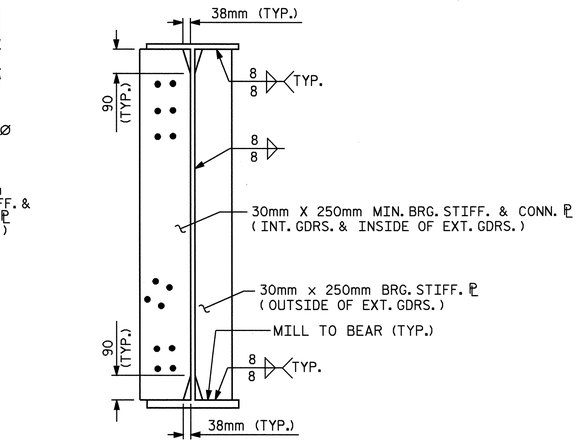

BRG. STIFF./CONN. PL DETAIL

END BENT #1 AND #2 DIAPHRAGM

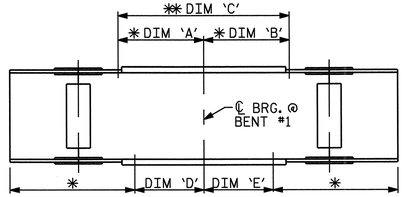

GDR.#	DIM 'A'	DIM 'B'	DIM 'C'	DIM 'D'	DIM 'E'
1	19.240m	13.700m	32.940m	7.760m	7.860m
2	18.160m	13.000m	31.160m	8.320m	8.180m
3	19.080m	13.360m	32.440m	8.460m	8.240m
4	20.120m	13.880m	34.000m	8.720m	8.420m

CHARPY V-NOTCH TEST FOR GIRDERS

* CHARPY V-NOTCH TESTS WILL BE REQUIRED FOR ALL TOP OR BOTTOM FLANGE PLATES WHICH FALLS WITHIN THESE LIMITS, INCLUDING ALL WEB PLATES, AND ALL SPLICE PLATES. IF A PERMITTED SHOP FLANGE SPLICE IS NOT USED, CHARPY V-NOTCH TESTS WILL BE REQUIRED FOR THE ENTIRE FLANGE PLATE. FOR CHARPY V-NOTCH TESTS SEE SPECIAL PROVISIONS.

** NO WELDING OF FORMS OR FALSEWORK TO THE TOP FLANGE WILL BE PERMITTED IN THIS REGION.

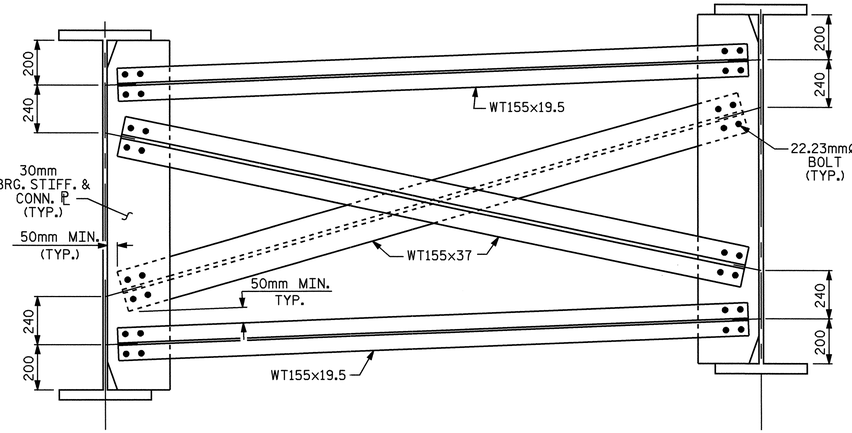

BENT DIAPHRAGM

(CF2)

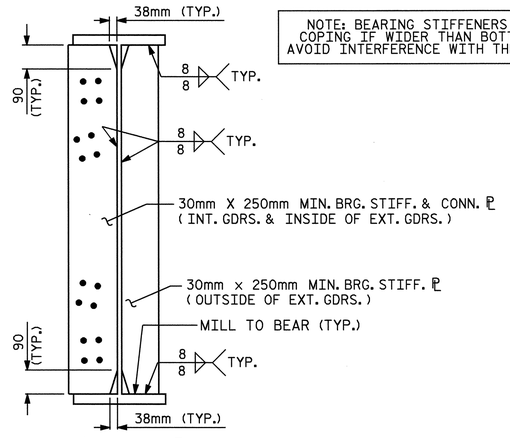

BRG. STIFF./CONN. PL DETAIL

BENT #1 DIAPHRAGM

NOTE: BEARING STIFFENERS MAY REQUIRE COPING IF WIDER THAN BOTTOM FLANGE TO AVOID INTERFERENCE WITH THE ANCHOR BOLTS.

INTERMEDIATE DIAPHRAGM

(CF3)

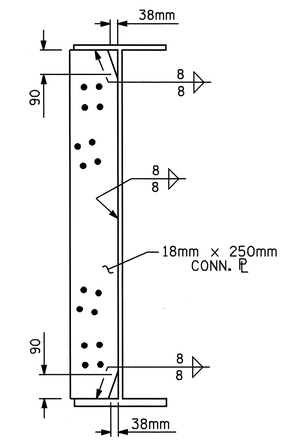

CONNECTOR PL DETAIL

INTERMEDIATE DIAPHRAGM

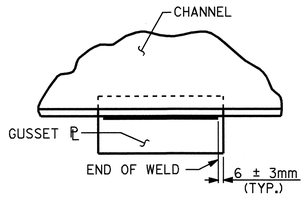

TYPICAL GUSSET PLATE CONNECTION

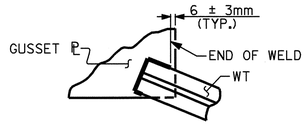

TYPICAL "TEE" TO GUSSET PLATE CONNECTIONS

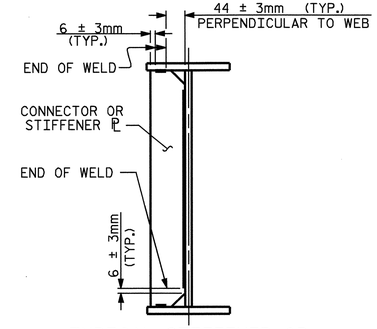

TYPICAL STIFFENER OR CONNECTOR PLATE CONNECTIONS

WELD TERMINATION DETAILS

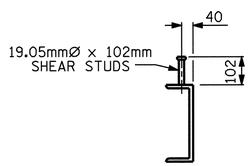

SHEAR STUD DETAILS

NORTH CAROLINA PROFESSIONAL SEAL 23371 ENGINEER VIPUL A. PATEL
5/22/06

PROJECT NO. R-0609IA

GUILFORD COUNTY

STATION 38+45.624-L-

SHEET 2 OF 3

STATE OF NORTH CAROLINA
DEPARTMENT OF TRANSPORTATION
RALEIGH

SUPERSTRUCTURE

STRUCTURAL STEEL DETAILS

REVISIONS						SHEET NO.
NO.	BY:	DATE:	NO.	BY:	DATE:	S-85
1			3			TOTAL SHEETS
2			4			321

STR. #3

DRAWN BY : J.P. ADAMS DATE : 1/6/05
CHECKED BY : M.K. BEARD DATE : 2/05

22-MAY-2006 08:03
T:\Structures\Final Plans\Str3\R-0609IA_sd_SS_03.dgn
klayne

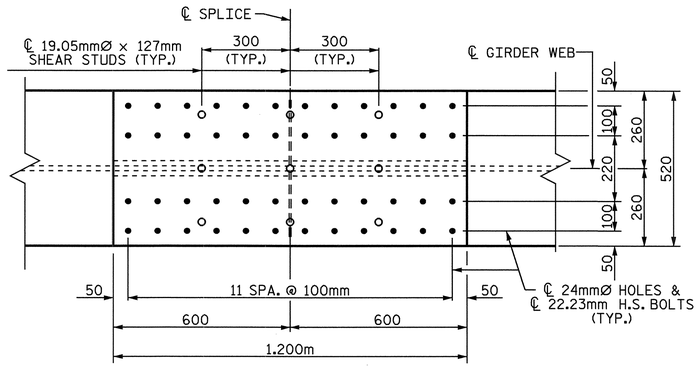

PLAN
TOP OF TOP FLANGE

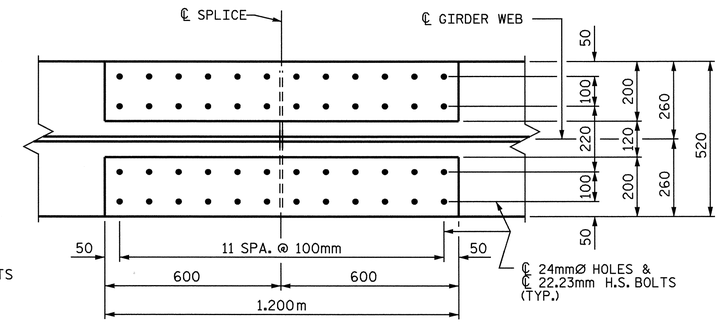

PLAN
TOP OF BOTTOM FLANGE

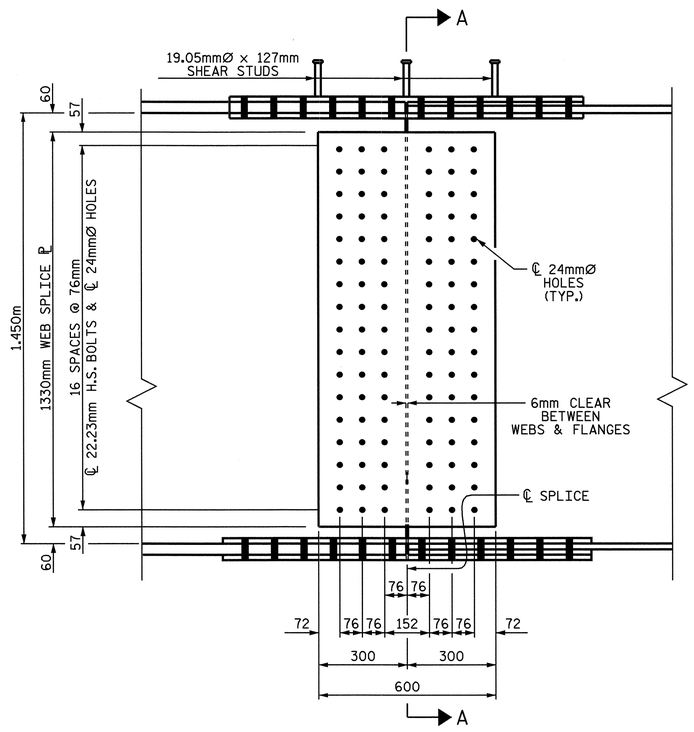

ELEVATION

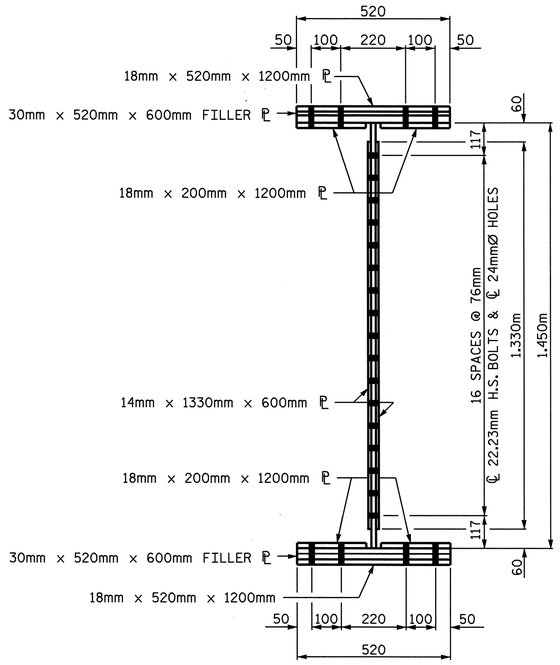

SECTION A-A

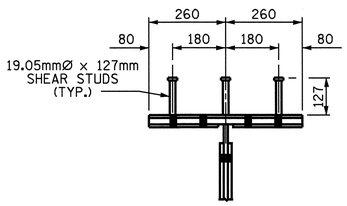

SHEAR STUD DETAIL FOR TOP FLANGE SPLICE PLATE

NOTES

ALL STRUCTURAL STEEL SHALL BE AASHTO M270 GRADE 345W STEEL AND PAINTED IN ACCORDANCE WITH SYSTEM 4 OF ARTICLE 442-7 OF THE STANDARD SPECIFICATIONS UNLESS OTHERWISE NOTED ON THE PLANS.

ALL DIMENSIONS SHOWN ARE HORIZONTAL OR VERTICAL, UNLESS OTHERWISE NOTED.

ALL FIELD CONNECTIONS TO BE 22.23mm DIA. HIGH STRENGTH BOLTS UNLESS OTHERWISE NOTED.

BEARING STIFFENERS ARE TO BE PLACED NORMAL TO THE WEB OF THE GIRDER AND SHALL BE PLUMB.

SHOP SPLICES ARE PERMITTED TO LIMIT THE MAXIMUM REQUIRED FLANGE PIECE LENGTHS TO 18 METERS AND WEB PIECE LENGTHS TO 14 METERS. PERMITTED FLANGE AND WEB SHOP SPLICES SHALL NOT BE LOCATED WITHIN 4.5 METERS OF MAXIMUM DEAD LOAD DEFLECTION (NOR WITHIN 4.5 METERS OF INTERMEDIATE BEARINGS OF CONTINUOUS UNITS). KEEP 600mm MINIMUM BETWEEN WEB AND FLANGE SHOP SPLICES. KEEP 150mm MINIMUM BETWEEN CONNECTOR PLATE OR TRANSVERSE STIFFENER WELDS AND WEB OR FLANGE SHOP SPLICES.

STUDS ON GIRDERS MAY BE SHIFTED UP TO 25mm IF NECESSARY TO CLEAR FLANGE SPLICE WELD.

TENSION ON THE AASHTO M164 BOLTS SHALL BE CALIBRATED USING DIRECT TENSION INDICATOR WASHERS IN ACCORDANCE WITH ARTICLE 440-10 OF THE STANDARD SPECIFICATIONS.

FOR CHARPY V-NOTCH TEST, SEE SPECIAL PROVISIONS.

END OF CONTINUOUS PLATE GIRDERS SHALL BE IN A PLUMB POSITION AFTER THE TOTAL DEAD LOAD DEFLECTION HAS OCCURRED. SHOP PLANS SHALL BE PREPARED ACCORDINGLY.

FOR HEAT CURVING GIRDERS, SEE SPECIAL PROVISIONS.

SHEAR STUDS ARE TO BE WELDED ON TOP OF PLATE BEFORE FIELD ASSEMBLY.

BEARING STIFFENER MAY REQUIRE COPING IF WIDER THAN BOTTOM FLANGE TO AVOID INTERFERENCE WITH THE ANCHOR BOLT.

BOLTED FIELD SPLICE DETAILS

DRAWN BY : J.P. ADAMS DATE : 1/11/05
CHECKED BY : M.K. BEARD DATE : 2/05

07-NOV-2006 08:32
R:\Structures\Final Plans\Str3\R-0609IA_sd_SS_03.dgn
kbeard

NORTH CAROLINA PROFESSIONAL SEAL 23371 ENGINEER VIPUL A. PATEL
11/7/06

PROJECT NO. R-0609IA
GUILFORD COUNTY
STATION 38+45.624 -L-

SHEET 3 OF 3

STATE OF NORTH CAROLINA
DEPARTMENT OF TRANSPORTATION
RALEIGH

SUPERSTRUCTURE

STRUCTURAL STEEL DETAILS

REVISIONS						SHEET NO.
NO.	BY:	DATE:	NO.	BY:	DATE:	S-86
1			3			TOTAL SHEETS
2			4			321

STR. #3

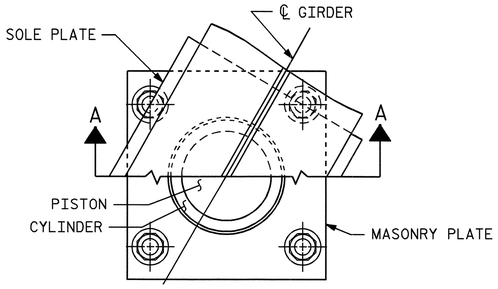

CUT-AWAY PLAN

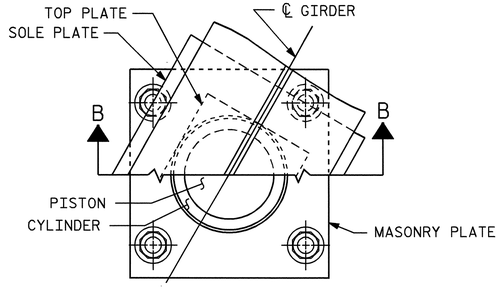

CUT-AWAY PLAN

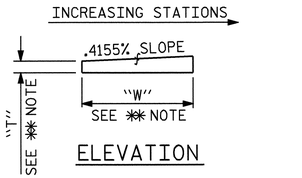

ELEVATION

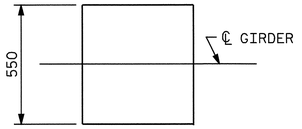

PLAN

✱✱ NOTE:
DIMENSIONS "W" AND "T" ARE TO BE DETERMINED BY THE MANUFACTURER.

SOLE PLATE DETAILS

NOTES

FOR POT BEARINGS, SEE SPECIAL PROVISIONS.

AT ALL POINTS OF SUPPORT IN SPANS A AND B, NUTS FOR ANCHOR BOLTS SHALL BE TIGHTENED FINGER TIGHT AND GIVEN AN ADDITIONAL 1/4 TURN. THE THREAD OF THE NUT AND BOLT SHALL THEN BE BURRED WITH A SHARP POINTED TOOL.

WHEN WELDING THE SOLE PLATE TO THE GIRDER, USE TEMPERATURE INDICATING WAX PENS, OR OTHER SUITABLE MEANS, TO ENSURE THAT THE TEMPERATURE OF THE BEARING DOES NOT EXCEED 121°C TEMPERATURES ABOVE THIS MAY DAMAGE THE TFE OR ELASTOMER.

AFTER BEARING ASSEMBLY IS IN PLACE AND ANCHOR BOLTS HAVE BEEN FINALLY POSITIONED. THEY SHALL BE GROUTED IN PLACE AS SHOWN.

THE CLOSURE PLATE, GROUT PIPE AND STANDARD PIPE FOR THIS ASSEMBLY NEED NOT BE GALVANIZED.

SOLE PLATES SHOULD BE WELDED TO BEAM FLANGES AND ANCHOR BOLTS SHOULD BE GROUTED BEFORE FALSEWORK IS PLACED.

ALL SURFACES OF BEARING PLATES SHALL BE SMOOTH AND STRAIGHT.

FOR THERMAL SPRAYED COATINGS (METALLIZATION), SEE SPECIAL PROVISIONS.

THE CONTRACTOR MAY SUBSTITUTE DISC BEARINGS FOR THE POT BEARINGS SHOWN. FOR OPTIONAL DISC BEARINGS, SEE SPECIAL PROVISIONS.

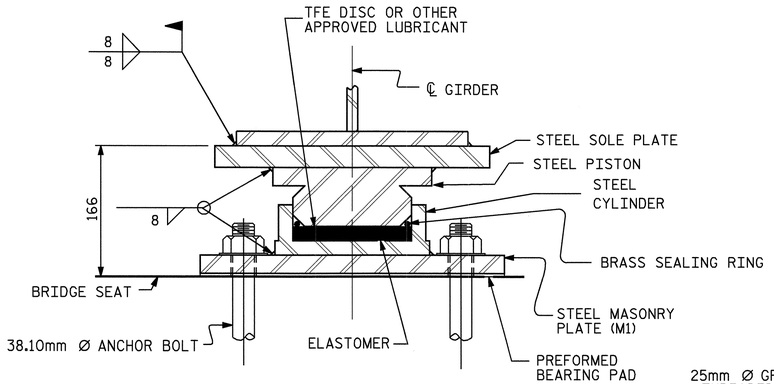

SECTION A-A

PB1, FIXED

(4 REQ'D.)

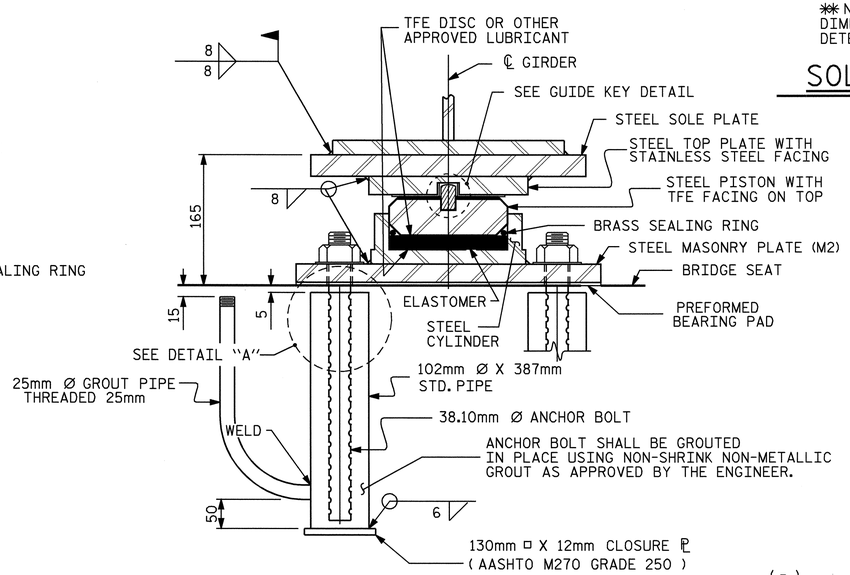

SECTION B-B

PB2, EXP.

(8 REQ'D.)

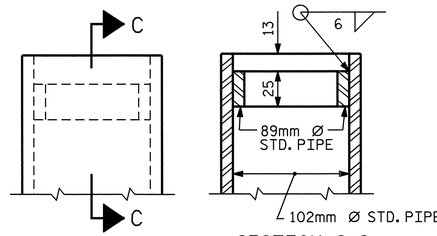

SECTION C-C

DETAIL "A"

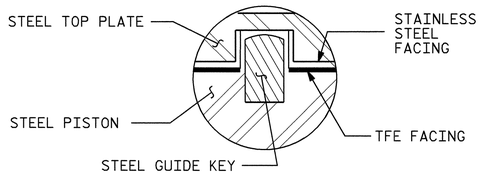

GUIDE KEY DETAIL

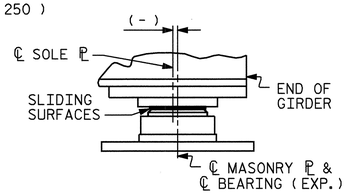

POT BEARING DETAILS

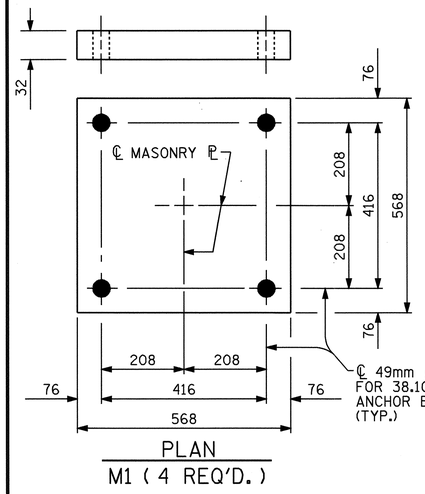

PLAN

M1 (4 REQ'D.)

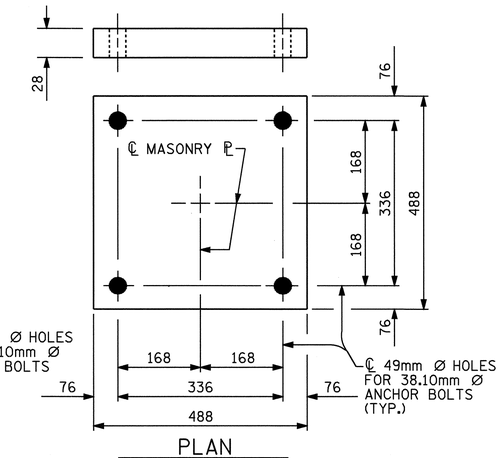

PLAN

M2 (8 REQ'D.)

MASONRY PLATE DETAILS

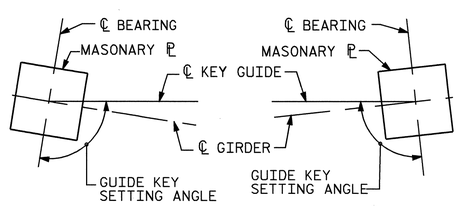

@ END BENT #1 @ END BENT #2

TABLE FOR PLATE SETTING DATA

(EXPANSION POT BEARINGS)

TEMPERATURE AT TIME OF SETTING	0° C	16° C	32° C	✱
END BENT #1	7mm	0	7mm	5.1mm
END BENT #2	8mm	0	8mm	14.8mm

✱CORRECTION FOR END ROTATION DUE TO WEIGHT OF SLAB AND COMPOSITE DEAD LOAD.

TEMPERATURE SETTING DETAIL

GUIDE KEY SETTING ANGLES

GIRDER	END BENT #1	END BENT #2
#1	92°-44'-28"	86°-41'-27"
#2	92°-45'-25"	86°-42'-24"
#3	92°-46'-21"	86°-43'-20"
#4	92°-47'-16"	86°-44'-15"

TABLE FOR LOADS AND MOVEMENTS

BEARING	LOCATION	VERTICAL LOAD (kN)			LATERAL LOAD (kN)	TOTAL MOVEMENT (mm)
		DEAD	LIVE	TOTAL		
PB2 (EXP.)	END BENT #1	347	228	575	70	29
PB1 (FIXED)	BENT #1	1636	504	2140	328	0
PB2 (EXP.)	END BENT #2	502	232	734	101	34

PROJECT NO. R-0609IA

GUILFORD COUNTY

STATION: 38+45.624-L-

STATE OF NORTH CAROLINA
DEPARTMENT OF TRANSPORTATION
RALEIGH

STANDARD

POT BEARING DETAILS

REVISIONS						SHEET NO.
NO.	BY:	DATE:	NO.	BY:	DATE:	S-87
1			3			TOTAL SHEETS
2			4			321

STR. #3

PB1SM.STD

ASSEMBLED BY : J.P. ADAMS	DATE : 1/6/05
CHECKED BY : M.K. BEARD	DATE : 2/05
DRAWN BY : RWW 8/99	REV. 10/17/00 RWW/LES
CHECKED BY : LES 8/99	REV. 7/10/01 LES/RWW
	REV. 5/7/03 RWW/JTE

22-MAY-2006 08:01
T:\Structures\Final Plans\Str3\R-0609IA_sd_BG_03.dgn
klayne

DEAD LOAD DEFLECTION TABLE FOR GIRDER #1

	SPAN A																					SPAN B																						
TWENTIETH POINTS	0	0.05	0.10	0.15	0.20	0.25	0.30	0.35	0.40	0.45	0.50	0.55	0.60	0.65	0.70	0.75	0.80	0.85	0.90	0.95	0	0.05	0.10	0.15	0.20	0.25	0.30	0.35	0.40	0.45	0.50	0.55	0.60	0.65	0.70	0.75	0.80	0.85	0.90	0.95	0
DEFLECTION DUE TO WEIGHT OF GIRDER	0	-0.001	-0.002	-0.002	-0.003	-0.003	-0.003	-0.003	-0.003	-0.003	-0.003	-0.003	-0.002	-0.001	-0.001	0	0	0	0	0	0	-0.001	-0.002	-0.004	-0.005	-0.007	-0.009	-0.011	-0.012	-0.013	-0.014	-0.014	-0.014	-0.014	-0.013	-0.012	-0.009	-0.008	-0.005	-0.003	0
✱ DEFLECTION DUE TO WEIGHT OF SLAB	0	-0.003	-0.006	-0.009	-0.011	-0.012	-0.013	-0.014	-0.013	-0.013	-0.012	-0.010	-0.008	-0.006	-0.004	-0.002	0	0.001	0.002	0.001	0	-0.003	-0.008	-0.013	-0.019	-0.026	-0.032	-0.039	-0.045	-0.049	-0.052	-0.054	-0.054	-0.052	-0.049	-0.044	-0.037	-0.029	-0.020	-0.011	0
DEFLECTION DUE TO WEIGHT OF BARRIER RAIL	0	0	-0.001	-0.001	-0.001	-0.002	-0.002	-0.002	-0.002	-0.002	-0.001	-0.001	-0.001	-0.001	-0.001	0	0	0	0	0	0	0	-0.001	-0.002	-0.002	-0.003	-0.004	-0.005	-0.005	-0.006	-0.006	-0.006	-0.006	-0.006	-0.006	-0.005	-0.004	-0.003	-0.002	-0.001	0
✱✱ TOTAL DEAD LOAD DEFLECTION	0	-0.004	-0.009	-0.012	-0.015	-0.017	-0.018	-0.019	-0.018	-0.018	-0.016	-0.014	-0.011	-0.008	-0.006	-0.002	0	0.001	0.002	0.001	0	-0.004	-0.011	-0.019	-0.026	-0.036	-0.045	-0.055	-0.062	-0.068	-0.072	-0.074	-0.074	-0.072	-0.068	-0.061	-0.050	-0.040	-0.027	-0.015	0
VERTICAL CURVE ORDINATE	0	0	0	0	0	0	0	0	0	0	0	0	0	0	0	0	0	0	0	0	0	0	0	0	0	0	0	0	0	0	0	0	0	0	0	0	0	0	0	0	0
ORDINATE DUE TO SUPERELEVATION	0	0	0	0	0	0	0	0	0	0	0	0	0	0	0	0	0	0	0	0	0	0	0	0	0	0	0	0	0	0	0	0	0	0	0	0	0	0	0	0	0
REQUIRED CAMBER	0	4	9	12	15	17	18	19	18	18	16	14	11	8	6	2	0	-1	-2	-1	0	4	11	19	26	36	45	55	62	68	72	74	74	72	68	61	50	40	27	15	0

DEAD LOAD DEFLECTION TABLE FOR GIRDER #2

	SPAN A																					SPAN B																						
TWENTIETH POINTS	0	0.05	0.10	0.15	0.20	0.25	0.30	0.35	0.40	0.45	0.50	0.55	0.60	0.65	0.70	0.75	0.80	0.85	0.90	0.95	0	0.05	0.10	0.15	0.20	0.25	0.30	0.35	0.40	0.45	0.50	0.55	0.60	0.65	0.70	0.75	0.80	0.85	0.90	0.95	0
DEFLECTION DUE TO WEIGHT OF GIRDER	0	-0.001	-0.002	-0.002	-0.003	-0.003	-0.004	-0.004	-0.004	-0.003	-0.003	-0.003	-0.002	-0.002	-0.001	0	0	0	0.001	0	0	-0.001	-0.002	-0.004	-0.006	-0.008	-0.010	-0.012	-0.013	-0.014	-0.015	-0.016	-0.016	-0.015	-0.014	-0.013	-0.011	-0.008	-0.006	-0.003	0
✱ DEFLECTION DUE TO WEIGHT OF SLAB	0	-0.004	-0.007	-0.009	-0.012	-0.014	-0.015	-0.015	-0.015	-0.014	-0.013	-0.011	-0.009	-0.006	-0.004	-0.002	0	0.001	0.002	0.001	0	-0.004	-0.008	-0.015	-0.021	-0.028	-0.035	-0.042	-0.049	-0.053	-0.057	-0.058	-0.059	-0.057	-0.053	-0.048	-0.041	-0.032	-0.022	-0.012	0
DEFLECTION DUE TO WEIGHT OF BARRIER RAIL	0	0	-0.001	-0.001	-0.001	-0.002	-0.002	-0.002	-0.002	-0.002	-0.002	-0.001	-0.001	-0.001	-0.001	0	0	0	0	0	0	0	-0.001	-0.002	-0.003	-0.003	-0.004	-0.005	-0.006	-0.006	-0.007	-0.007	-0.007	-0.007	-0.006	-0.006	-0.005	-0.004	-0.003	-0.001	0
✱✱ TOTAL DEAD LOAD DEFLECTION	0	-0.005	-0.010	-0.012	-0.016	-0.019	-0.021	-0.021	-0.021	-0.019	-0.018	-0.015	-0.012	-0.009	-0.006	-0.002	0	0.001	0.003	0.001	0	-0.005	-0.011	-0.021	-0.030	-0.039	-0.049	-0.059	-0.068	-0.073	-0.079	-0.081	-0.082	-0.079	-0.073	-0.067	-0.057	-0.044	-0.031	-0.016	0
VERTICAL CURVE ORDINATE	0	0	0	0	0	0	0	0	0	0	0	0	0	0	0	0	0	0	0	0	0	0	0	0	0	0	0	0	0	0	0	0	0	0	0	0	0	0	0	0	0
ORDINATE DUE TO SUPERELEVATION	0	0	0	0	0	0	0	0	0	0	0	0	0	0	0	0	0	0	0	0	0	0	0	0	0	0	0	0	0	0	0	0	0	0	0	0	0	0	0	0	0
REQUIRED CAMBER	0	5	10	12	16	19	21	21	21	19	18	15	12	9	6	2	0	-1	-3	-1	0	5	11	21	30	39	49	59	68	73	79	81	82	79	73	67	57	44	31	16	0

DEAD LOAD DEFLECTION TABLE FOR GIRDER #3

	SPAN A																					SPAN B																						
TWENTIETH POINTS	0	0.05	0.10	0.15	0.20	0.25	0.30	0.35	0.40	0.45	0.50	0.55	0.60	0.65	0.70	0.75	0.80	0.85	0.90	0.95	0	0.05	0.10	0.15	0.20	0.25	0.30	0.35	0.40	0.45	0.50	0.55	0.60	0.65	0.70	0.75	0.80	0.85	0.90	0.95	0
DEFLECTION DUE TO WEIGHT OF GIRDER	0	-0.001	-0.002	-0.003	-0.003	-0.004	-0.004	-0.004	-0.004	-0.004	-0.003	-0.003	-0.002	-0.002	-0.001	-0.000	0	0	0.001	0	0	-0.001	-0.003	-0.004	-0.006	-0.008	-0.010	-0.012	-0.014	-0.015	-0.016	-0.017	-0.017	-0.016	-0.015	-0.014	-0.012	-0.009	-0.006	-0.003	0
✱ DEFLECTION DUE TO WEIGHT OF SLAB	0	-0.004	-0.007	-0.010	-0.013	-0.014	-0.016	-0.016	-0.015	-0.015	-0.013	-0.011	-0.009	-0.006	-0.004	-0.002	0	0.001	0.002	0.002	0	-0.004	-0.009	-0.016	-0.023	-0.030	-0.038	-0.045	-0.052	-0.057	-0.061	-0.063	-0.063	-0.061	-0.057	-0.051	-0.044	-0.034	-0.024	-0.013	0
DEFLECTION DUE TO WEIGHT OF BARRIER RAIL	0	-0.001	-0.001	-0.001	-0.002	-0.002	-0.002	-0.002	-0.002	-0.002	-0.002	-0.001	-0.001	-0.001	-0.001	-0.000	0	0	0	0	0	-0.001	-0.001	-0.002	-0.003	-0.004	-0.005	-0.005	-0.006	-0.007	-0.007	-0.007	-0.007	-0.007	-0.007	-0.006	-0.005	-0.004	-0.003	-0.001	0
✱✱ TOTAL DEAD LOAD DEFLECTION	0	-0.006	-0.010	-0.014	-0.018	-0.020	-0.022	-0.022	-0.021	-0.021	-0.018	-0.015	-0.012	-0.009	-0.006	-0.002	0	0.001	0.003	0.002	0	-0.006	-0.013	-0.022	-0.032	-0.042	-0.053	-0.062	-0.072	-0.079	-0.084	-0.087	-0.087	-0.084	-0.079	-0.071	-0.061	-0.047	-0.033	-0.017	0
VERTICAL CURVE ORDINATE	0	0	0	0	0	0	0	0	0	0	0	0	0	0	0	0	0	0	0	0	0	0	0	0	0	0	0	0	0	0	0	0	0	0	0	0	0	0	0	0	0
ORDINATE DUE TO SUPERELEVATION	0	0	0	0	0	0	0	0	0	0	0	0	0	0	0	0	0	0	0	0	0	0	0	0	0	0	0	0	0	0	0	0	0	0	0	0	0	0	0	0	0
REQUIRED CAMBER	0	6	10	14	18	20	22	22	21	21	18	15	12	9	6	2	0	-1	-3	-2	0	6	13	22	32	42	53	62	72	79	84	87	87	84	79	71	61	47	33	17	0

DEAD LOAD DEFLECTION TABLE FOR GIRDER #4

	SPAN A																					SPAN B																						
TWENTIETH POINTS	0	0.05	0.10	0.15	0.20	0.25	0.30	0.35	0.40	0.45	0.50	0.55	0.60	0.65	0.70	0.75	0.80	0.85	0.90	0.95	0	0.05	0.10	0.15	0.20	0.25	0.30	0.35	0.40	0.45	0.50	0.55	0.60	0.65	0.70	0.75	0.80	0.85	0.90	0.95	0
DEFLECTION DUE TO WEIGHT OF GIRDER	0	-0.001	-0.002	-0.003	-0.003	-0.004	-0.004	-0.004	-0.004	-0.004	-0.004	-0.003	-0.002	-0.002	-0.001	0	0	0.001	0.001	0.001	0	-0.001	-0.003	-0.005	-0.007	-0.009	-0.011	-0.013	-0.015	-0.017	-0.018	-0.018	-0.018	-0.017	-0.016	-0.015	-0.012	-0.010	-0.007	-0.004	0
✱ DEFLECTION DUE TO WEIGHT OF SLAB	0	-0.004	-0.008	-0.011	-0.013	-0.015	-0.016	-0.017	-0.016	-0.015	-0.014	-0.012	-0.009	-0.006	-0.004	-0.001	0.001	0.002	0.002	0.002	0	-0.004	-0.010	-0.017	-0.024	-0.032	-0.040	-0.049	-0.056	-0.061	-0.065	-0.067	-0.067	-0.065	-0.061	-0.055	-0.047	-0.037	-0.026	-0.013	0
DEFLECTION DUE TO WEIGHT OF BARRIER RAIL	0	-0.001	-0.001	-0.001	-0.002	-0.002	-0.002	-0.002	-0.002	-0.002	-0.002	-0.002	-0.001	-0.001	-0.001	0	0	0	0	0	0	-0.001	-0.001	-0.002	-0.003	-0.004	-0.005	-0.006	-0.007	-0.007	-0.008	-0.008	-0.008	-0.008	-0.007	-0.006	-0.005	-0.004	-0.003	-0.002	0
✱✱ TOTAL DEAD LOAD DEFLECTION	0	-0.006	-0.011	-0.015	-0.018	-0.021	-0.022	-0.023	-0.022	-0.021	-0.020	-0.017	-0.012	-0.009	-0.006	-0.001	0.001	0.003	0.003	0.003	0	-0.006	-0.014	-0.024	-0.034	-0.045	-0.056	-0.068	-0.078	-0.085	-0.091	-0.093	-0.093	-0.090	-0.084	-0.076	-0.064	-0.051	-0.036	-0.019	0
VERTICAL CURVE ORDINATE	0	0	0	0	0	0	0	0	0	0	0	0	0	0	0	0	0	0	0	0	0	0	0	0	0	0	0	0	0	0	0	0	0	0	0	0	0	0	0	0	0
ORDINATE DUE TO SUPERELEVATION	0	0	0	0	0	0	0	0	0	0	0	0	0	0	0	0	0	0	0	0	0	0	0	0	0	0	0	0	0	0	0	0	0	0	0	0	0	0	0	0	0
REQUIRED CAMBER	0	6	11	15	18	21	22	23	22	21	20	17	12	9	6	1	-1	-3	-3	-3	0	6	14	24	34	45	56	68	78	85	91	93	93	90	84	76	64	51	36	19	0

✱ INCLUDES SLAB, BUILDUPS & STAY-IN-PLACE FORMS.
ALL VALUES ARE SHOWN IN METERS, EXCEPT " REQUIRED CAMBER ", WHICH IS GIVEN IN MILLIMETERS.

SIGN CONVENTION FOR DEAD LOAD DEFLECTION + 0 −

✱✱ MODIFIED TO ACCOUNT FOR CAMBER LOSS DUE TO HEAT-CURVING

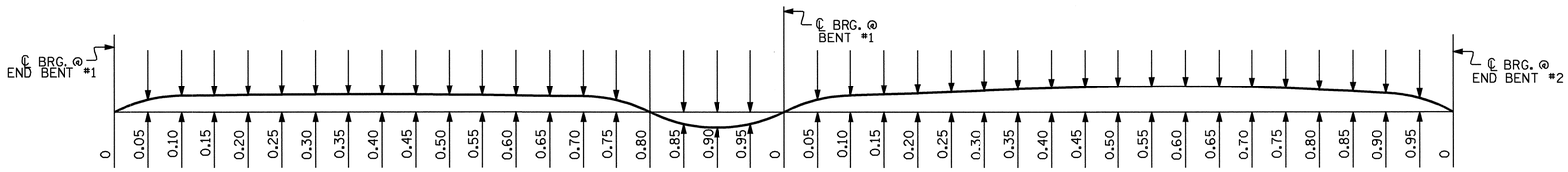

SCHEMATIC CAMBER ORDINATES

PROJECT NO. R-0609IA

GUILFORD COUNTY

STATION 38+45.624-L-

STATE OF NORTH CAROLINA
DEPARTMENT OF TRANSPORTATION
RALEIGH

SUPERSTRUCTURE

DEAD LOAD DEFLECTIONS

NORTH CAROLINA PROFESSIONAL SEAL 23371 ENGINEER VIPUL A. PATEL 5/22/06

REVISIONS						SHEET NO.
NO.	BY:	DATE:	NO.	BY:	DATE:	S-88
1			3			TOTAL SHEETS
2			4			321

STR. #3

DRAWN BY : J.P. ADAMS DATE : 2/16/05
CHECKED BY : M.K. BEARD DATE : 2/05

22-MAY-2006 08:01
T:\Structures\Final Plans\Str3\R-0609IA_sd_DL_03.dgn
klayne

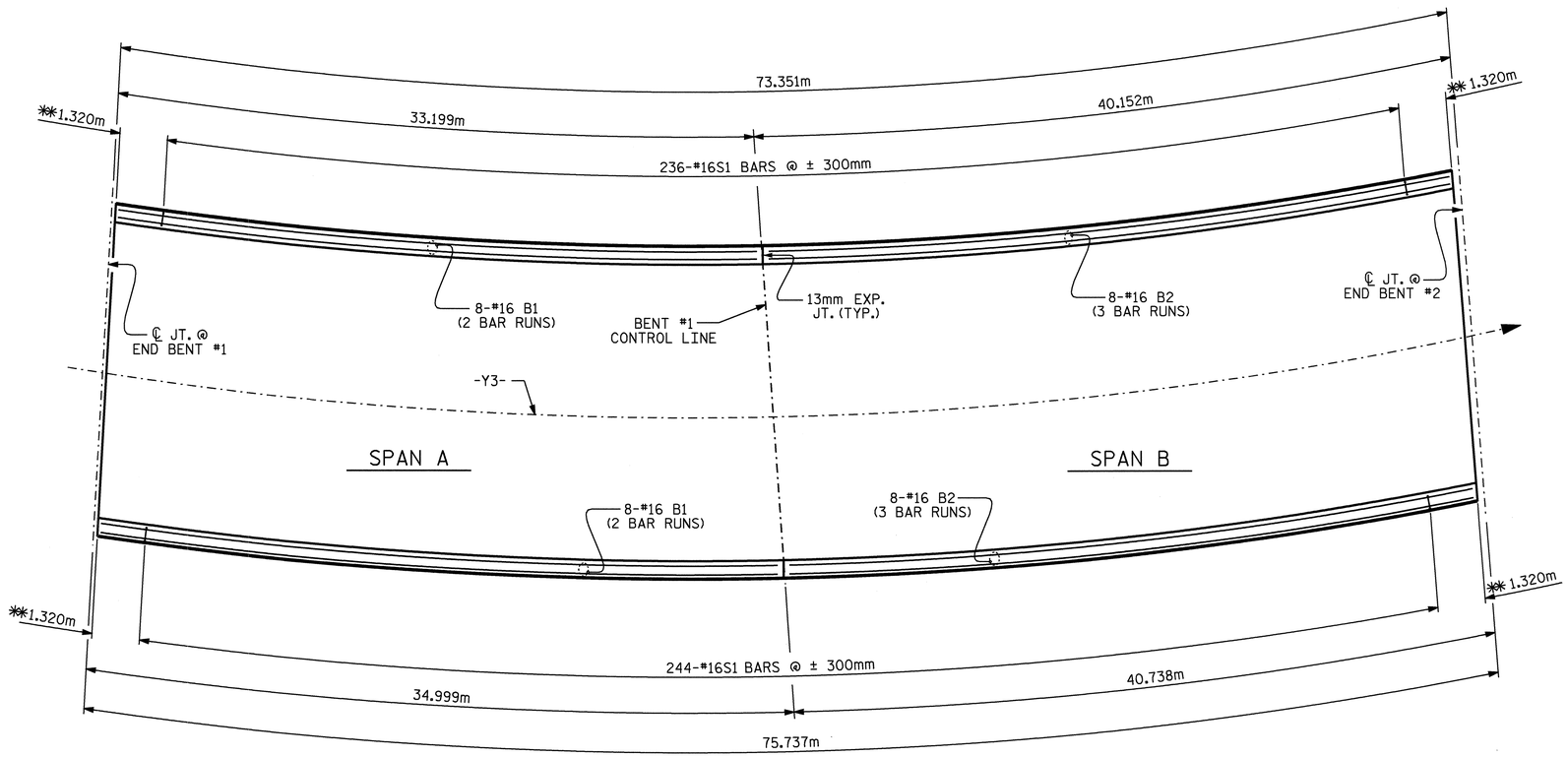

PLAN OF PARAPET

✳✳ SEE "PARAPET AND END POST FOR TWO BAR RAIL" FOR ADDITIONAL REINFORCING

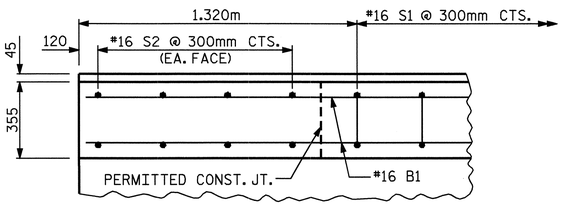

PLAN OF PARAPET

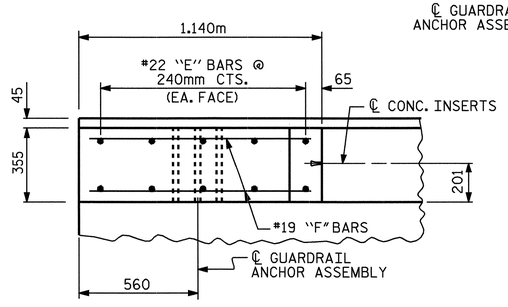

PLAN OF END POST

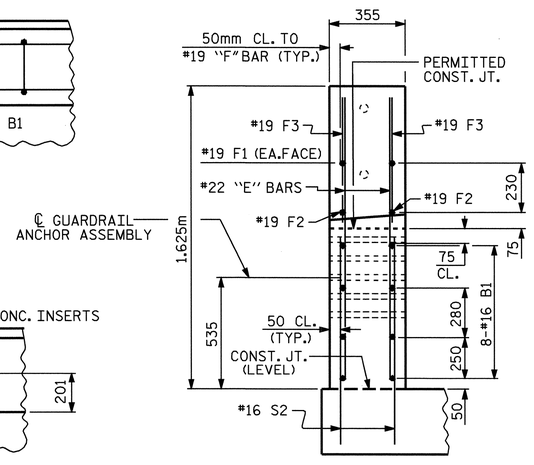

END VIEW

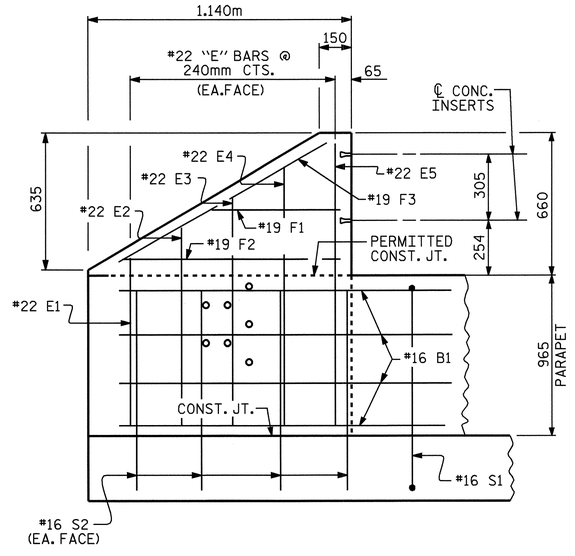

ELEVATION

PARAPET AND END POST FOR TWO BAR RAIL

BILL OF MATERIAL

PARAPET & 4 END POSTS

BAR	NO.	SIZE	TYPE	LENGTH	WEIGHT
✳B1	32	16	STR	17940	891
✳B2	48	16	STR	14240	1061
✳E1	8	22	STR	980	24
✳E2	8	22	STR	1120	27
✳E3	8	22	STR	1260	31
✳E4	8	22	STR	1420	35
✳E5	8	22	STR	1520	37
✳F1	8	19	STR	560	10
✳F2	8	19	STR	920	16
✳F3	8	19	STR	1020	18
✳S1	480	16	1	2540	1892
✳S2	32	16	STR	1120	56

✳EPOXY COATED REINFORCING STEEL 4098 kgs

CLASS "AA" CONCRETE 52.1m³

355mm X 965mm CONCRETE PARAPET 149.0 Meters

BAR TYPE

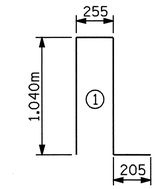

BAR DIMENSIONS ARE OUT TO OUT

NOTES

THE #16 S2 BARS SHALL BE INSTALLED USING AN ADHESIVE ANCHORING SYSTEM AFTER SAWING THE JOINT. FOR ADHESIVELY ANCHORED BOLTS OR DOWELS, SEE SPECIAL PROVISIONS. THE YIELD LOAD FOR THE #16 S2 BARS IS 82.7 kN. FIELD TESTING FOR THE ADHESIVE BONDING SYSTEM IS NOT REQUIRED.

GROOVED CONTRACTION JOINTS 12mm IN DEPTH, SHALL BE TOOLED IN ALL EXPOSED FACES OF PARAPET IN ACCORDANCE WITH ARTICLE 825-10(B) OF THE STANDARD SPECIFICATIONS. THE CONTRACTION JOINTS SHALL BE LOCATED AT A SPACING OF 2.4 METERS TO 3.5 METERS BETWEEN EXPANSION JOINTS. NO CONTRACTION JOINTSWILL BE REQUIRED FOR SEGMENTS LESS THAN 3.5 METERS IN LENGTH.

FOR DETAIL OF CONCRETE INSERT AND GUARDRAIL ANCHOR ASSEMBLY, SEE "RAIL POST SPACINGS AND END OF RAIL DETAIL" SHEETS.

✳ ALL REINFORCING STEEL IN PARAPET SHALL BE EPOXY COATED.

PROJECT NO. R-0609IA

GUILFORD COUNTY

STATION: 38+45.624-L-

SHEET 1 OF 5

NORTH CAROLINA PROFESSIONAL SEAL 23371 ENGINEER VIRUL A. PATEL 5/22/06

STATE OF NORTH CAROLINA
DEPARTMENT OF TRANSPORTATION
RALEIGH

CONCRETE PARAPET AND RAIL END POST DETAILS
FOR TWO BAR METAL RAILS

REVISIONS						SHEET NO.
NO.	BY:	DATE:	NO.	BY:	DATE:	S-89
1			3			TOTAL SHEETS
2			4			321

STR. #3

DRAWN BY : J.P.ADAMS DATE : 2/15/05
CHECKED BY : M.K. BEARD DATE : 2/05

22-MAY-2006 08:03
T:\Structures\Final Plans\Str3\R-0609IA_sd_MR_03.dgn
klayne

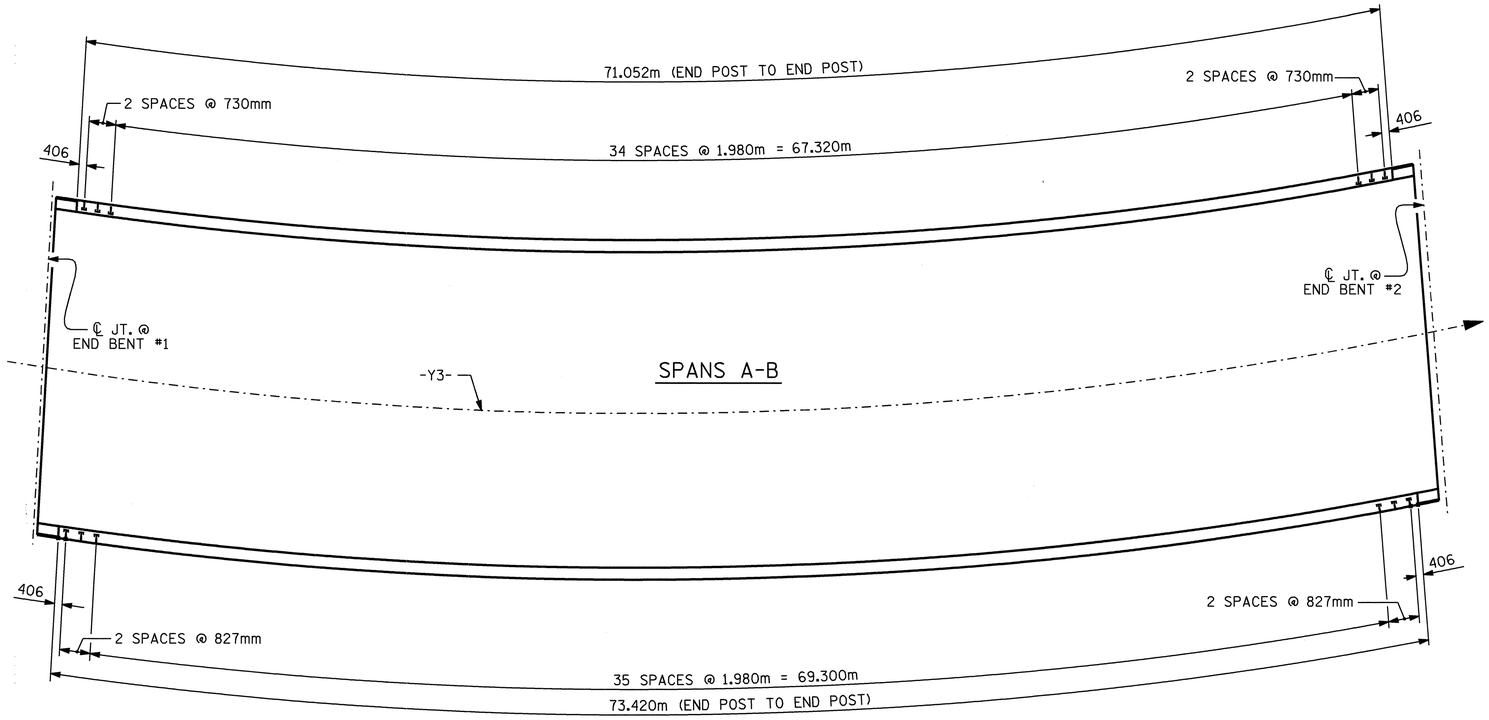

PLAN OF RAIL POST SPACINGS

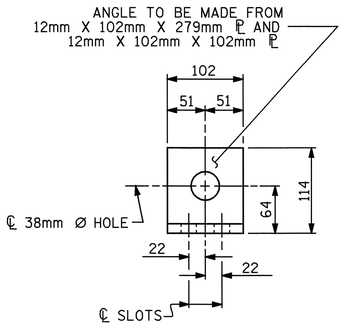

END VIEW

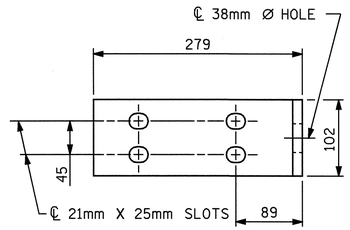

ELEVATION

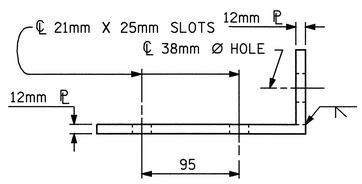

TOP VIEW

DETAILS FOR ATTACHING METAL RAIL TO END POST

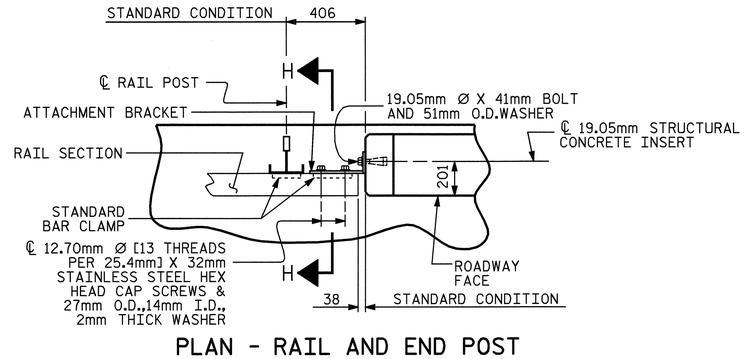

PLAN - RAIL AND END POST

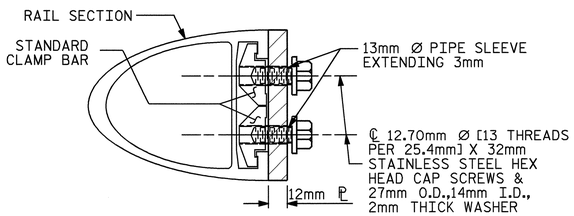

SECTION H-H

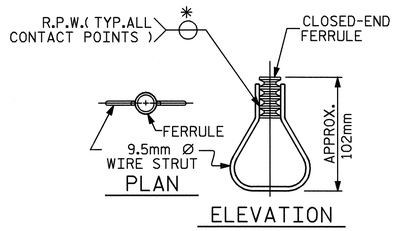

PLAN

ELEVATION

NOTES

STRUCTURAL CONCRETE INSERT

THE STRUCTURAL CONCRETE INSERT ASSEMBLY SHALL CONSIST OF THE FOLLOWING COMPONENTS:

A. FERRULES SHALL BE MADE FROM STEEL MEETING THE REQUIREMENTS OF AASHTO M169, GRADE 12L14 AND SHALL HAVE A MINIMUM LENGTH OF THREADS OF 38mm.

B. 1 - 19.05mm Ø X 41mm BOLT WITH WASHER. BOLT SHALL CONFORM TO THE REQUIREMENTS OF ASTM A307. BOLT AND WASHER SHALL BE GALVANIZED. (AT THE CONTRACTOR'S OPTION, STAINLESS STEEL BOLT AND WASHER MAY BE USED AS AN ALTERNATE FOR THE 19.05mm Ø X 41mm GALVANIZED BOLT AND WASHER. THEY SHALL CONFORM TO OR EXCEED THE MECHANICAL REQUIREMENTS OF ASTM A307. THE USE OF THIS ALTERNATE SHALL BE APPROVED BY THE ENGINEER.)

C. WIRE STRUT SHOWN IN THE CONCRETE INSERT ASSEMBLY DETAIL IS THE MINIMUM ALLOWABLE SIZE AND SHALL HAVE A MINIMUM TENSILE STRENGTH OF 689 MPa. AS AN OPTION, A 11mm Ø WIRE STRUT WITH A MINIMUM TENSILE STRENGTH OF 620 MPa. IS ACCEPTABLE.

NOTES

METAL RAIL TO END POST CONNECTION

THE METAL RAIL TO END POST CONNECTION SHALL CONSIST OF THE FOLLOWING COMPONENTS :

A. 12mm PLATES SHALL CONFORM TO AASHTO M270 GRADE 250 AND SHALL BE GALVANIZED AFTER FABRICATION.

B. 19.05mm STRUCTURAL CONCRETE INSERT SHALL HAVE A WORKING LOAD SHEAR CAPACITY OF 21.4 kN. THE FERRULES SHALL ENGAGE A 19.05mm Ø X 41mm BOLT WITH 51mm O.D. WASHER IN PLACE. THE 19.05mm Ø X 41mm BOLT SHALL HAVE N. C. THREADS.

C. CAP SCREWS FOR RAIL ATTACHMENT TO ANGLE SHALL CONFORM TO THE REQUIREMENTS OF ASTM F593 ALLOY 305 STAINLESS STEEL. CAP SCREWS TO BE CENTERED IN SLOTS AT 16°C.

D. STANDARD CLAMP BARS (SEE METAL RAIL SHEET).

E. 13mm Ø PIPE SLEEVES (IF REQUIRED) TO BE GALVANIZED.

THE COST OF THE STANDARD CLAMP BARS AND CAP SCREWS USED IN THE METAL RAIL TO END POST CONNECTION SHALL BE INCLUDED IN THE UNIT CONTRACT PRICE BID FOR METERS OF 1 OR 2 BAR METAL RAILS.

THE 19.05mm STRUCTURAL CONCRETE INSERT WITH BOLT SHALL BE ASSEMBLED IN THE SHOP.

THE COST OF THE 19.05mm STRUCTURAL CONCRETE INSERT ASSEMBLY, AND THE 12mm PLATES COMPLETE IN PLACE SHALL BE INCLUDED IN THE VARIOUS PAY ITEMS.

THE CONTRACTOR, AT HIS OPTION, MAY USE AN ADHESIVE BONDING SYSTEM IN LIEU OF THE STRUCTURAL CONCRETE INSERT EMBEDDED IN THE END POST. IF THE ADHESIVE BONDING SYSTEM IS USED, THE 19.05mm Ø X 41mm BOLT WITH WASHER SHALL BE REPLACED WITH A 19.05mm Ø X 165mm BOLT AND 51mm O.D. WASHER. ALL SPECIFICATIONS THAT APPLY TO THE 19.05mm Ø X 41mm BOLT SHALL APPLY TO THE 19.05mm Ø X 165mm BOLT. SEE SPECIAL PROVISIONS FOR "ADHESIVELY ANCHORED ANCHOR BOLTS AND DOWELS". FIELD TESTING OF THE ADHESIVE BONDING SYSTEM IS NOT REQUIRED.

STRUCTURAL CONCRETE INSERT

* EACH WELDED ATTACHMENT OF WIRE TO FERRULE SHALL DEVELOP THE TENSILE STRENGTH OF THE WIRE.

PROJECT NO. R-0609IA

GUILFORD COUNTY

STATION: 38+45.624-L-

SHEET 2 OF 5

NORTH CAROLINA PROFESSIONAL SEAL 23371 ENGINEER VIRUL A. PATEL 5/12/06

STATE OF NORTH CAROLINA
DEPARTMENT OF TRANSPORTATION
RALEIGH

STANDARD
RAIL POST SPACINGS
AND
END OF RAIL DETAILS
FOR TWO BAR METAL RAILS

REVISIONS						SHEET NO.
NO.	BY:	DATE:	NO.	BY:	DATE:	S-90
1			3			TOTAL SHEETS
2			4			321

STR.#3

STD. NO.BMR2SM

ASSEMBLED BY : J.P. ADAMS	DATE : 1/14/05
CHECKED BY : M.K. BEARD	DATE : 2/05
DRAWN BY : WJH 3/89	REV. 8/16/99 RWW/LES
CHECKED BY : CRK 3/89	REV. 10/17/00 LES/RDR
	REV. 5/7/03 RWW/JTE

22-MAY-2006 08:03
T:\Structures\Final Plans\Str3\R-0609IA_sd_MR_03.dgn
klayne

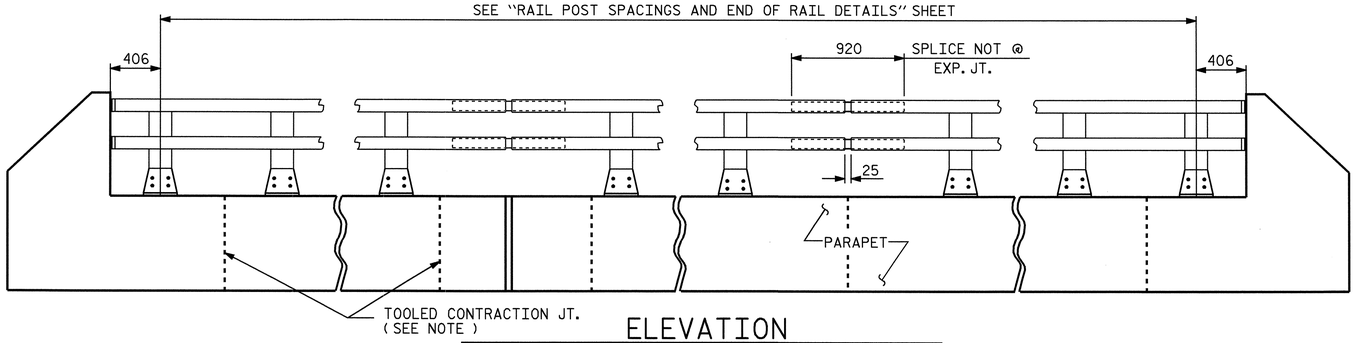

ELEVATION

NOTE: FOR ATTACHMENT OF METAL RAIL TO END POST, SEE "RAIL POST SPACINGS AND END OF RAIL DETAILS FOR TWO BAR METAL RAILS".

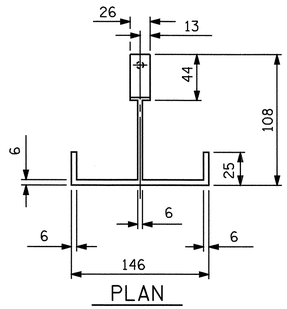

PLAN

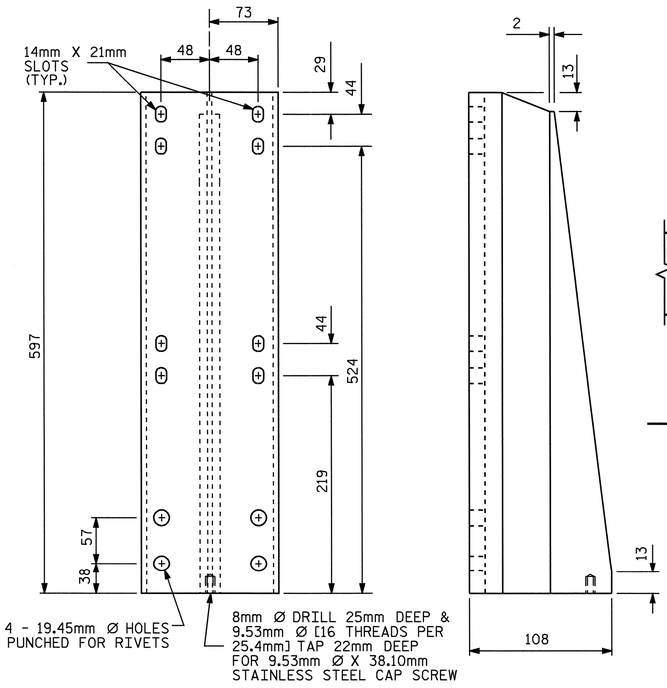

FRONT ELEVATION SIDE ELEVATION

DETAILS OF POST

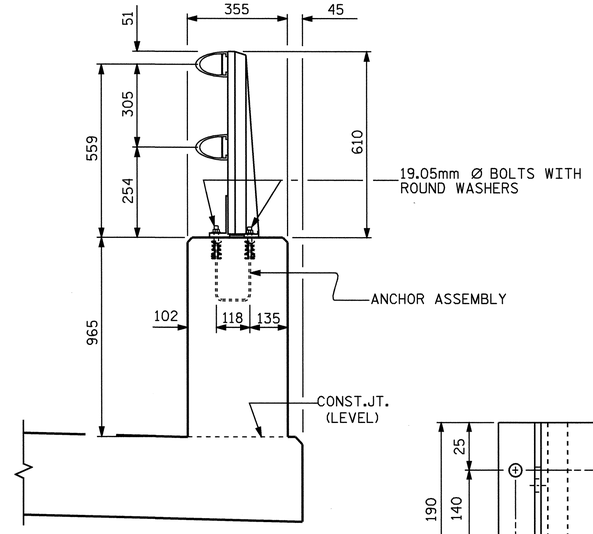

SECTION THRU PARAPET AND RAIL

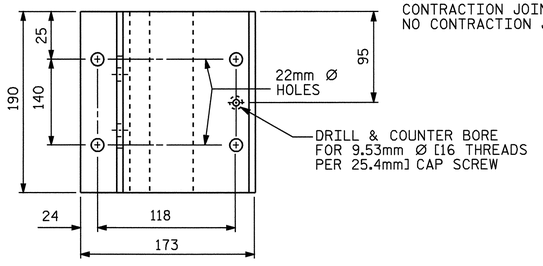

PLAN

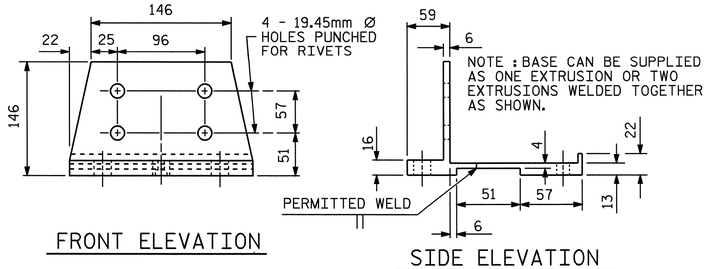

FRONT ELEVATION SIDE ELEVATION

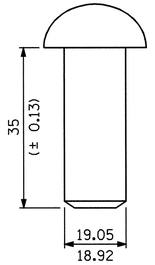

RIVET DETAIL

POST BASE DETAILS

NOTES

AT THE CONTRACTOR'S OPTION, METAL RAIL MAY BE EITHER ALUMINUM OR GALVANIZED STEEL IN ACCORDANCE WITH THE REQUIREMENTS OF THE GENERAL NOTES AND THE FOLLOWING SPECIFICATIONS FOR THE ALTERNATE MATERIALS; HOWEVER, THE CONTRACTOR WILL BE REQUIRED TO USE THE SAME RAIL MATERIAL ON ALL STRUCTURES ON THE PROJECT FOR WHICH METAL RAIL IS DESIGNATED.

ALUMINUM RAILS

MATERIAL FOR POSTS, BASES AND RAILS, EXPANSION BARS AND CLAMP BARS SHALL BE ASTM B221 ALLOY 6061-T6.

MATERIAL FOR RIVETS SHALL BE ASTM B316 ALLOY 6061-T6. RIVETS SHALL BE STANDARD BUTTON HEAD AND CONE POINT COLD DRIVEN AS PER DRAWING.

THE BASE OF RAIL POSTS, OR ANY OTHER ALUMINUM SURFACE IN CONTACT WITH CONCRETE SHALL BE THOROUGHLY COATED WITH AN ALUMINUM IMPREGNATED CAULKING COMPOUND OF APPROVED QUALITY.

MATERIAL FOR SHIMS TO BE ASTM B209 ALLOY 6061-T6.

GALVANIZED STEEL RAILS

MATERIAL AND GALVANIZING ARE TO CONFORM TO THE FOLLOWING SPECIFICATIONS:

POST, POST BASES, RAILS, EXPANSION BARS AND CLAMP BARS: AASHTO M270 GRADE 250 STRUCTURAL STEEL - GALVANIZED TO AASHTO M111.

RIVETS: RIVETS SHALL MEET THE REQUIREMENTS OF ASTM A502 FOR GRADE 1 RIVETS.

THE CUT ENDS OF GALVANIZED STEEL RAILING, AFTER GRINDING SMOOTH SHALL BE GIVEN TWO COATS OF ZINC RICH PAINT MEETING THE REQUIREMENTS OF FEDERAL SPECIFICATION MIL-P-26915 USAF TYPE 1, OR OF FEDERAL SPECIFICATIONS TT-P-641.

SHIMS: SHIMS SHALL MEET THE REQUIREMENTS OF ASTM A570M FOR GRADE 230 OR A611 FOR GRADE C AND SHALL BE GALVANIZED IN ACCORDANCE WITH AASHTO M111.

RAIL CAPS: RAIL CAPS SHALL MEET THE REQUIREMENTS OF ASTM A570M FOR GRADE 230 OR A611 FOR GRADE C AND SHALL BE GALVANIZED IN ACCORDANCE WITH AASHTO M111.

GENERAL NOTES

RAILING SHALL BE CONTINUOUS FROM END POST TO END POST OF BRIDGE. EACH JOINT IN RAIL LENGTH SHALL BE SPLICED AS DETAILED. PANEL LENGTHS OF RAIL SHALL BE ATTACHED TO A MINIMUM OF THREE POSTS.

FOR END OF RAIL TO CLEAR FACE OF CONCRETE END POST DIMENSION, SEE STANDARD NO. BMR2SM.

CAP SCREWS SHALL BE ASTM F593 ALLOY 305 STAINLESS STEEL. WASHERS SHALL MEET THE REQUIREMENTS OF ASTM F844 EXCEPT THEY SHALL BE MADE FROM ALLOY 304 STAINLESS STEEL.

CERTIFIED MILL REPORTS ARE REQUIRED FOR RAILS AND POSTS. SHOP INSPECTION IS NOT REQUIRED.

METAL RAIL POSTS SHALL BE SET NORMAL TO CURB GRADE.

METHOD OF MEASUREMENT FOR METAL RAILS: FOR LENGTH OF METAL RAILS TO BE PAID FOR, SEE THE STANDARD SPECIFICATIONS.

CURVED RAIL USAGE: WHERE RAILS ARE TO BE USED ON BRIDGES ON HORIZONTAL AND/OR VERTICAL CURVATURE THE CONTRACTOR MAY, AT HIS OPTION, HAVE THE REQUIRED CURVATURE IN THE RAIL FORMED IN THE SHOP OR IN THE FIELD. IN EITHER EVENT, THE RAIL SHALL CONFORM WITHOUT BUCKLING OR KINKING TO THE REQUIRED CURVATURE IN A UNIFORM MANNER ACCEPTABLE TO THE ENGINEER.

TO INSURE FUTURE IDENTIFICATION OF THE FABRICATOR, A PERMANENT IDENTIFYING MARK SHALL BE PLACED ON EACH POST. THE METHOD OF MARKING AND LOCATION SHALL BE SUCH THAT IT DOES NOT DETRACT FROM THE APPEARANCE OF THE POST, BUT REMAINS VISIBLE AFTER RAIL PLACEMENT.

SHIMS SHALL BE USED AS NECESSARY FOR POST ALIGNMENT.

ALLOY 6351-T5 MAY BE SUBSTITUTED FOR ALLOY 6061-T6 WHERE APPLICABLE.

MINOR VARIATIONS IN DETAILS OF METAL RAIL WILL BE CONSIDERED. DETAILS OF SUCH VARIATIONS, IF DESIRED, SHALL BE SUBMITTED FOR APPROVAL.

GROOVED CONTRACTION JOINTS, 12mm IN DEPTH, SHALL BE TOOLED IN ALL EXPOSED FACES OF THE PARAPET IN ACCORDANCE WITH ARTICLE 825-10(B) OF THE STANDARD SPECIFICATIONS. THE CONTRACTION JOINT SHALL BE LOCATED AT A SPACING OF 2.4m TO 3.5m BETWEEN EXPANSION JOINTS. NO CONTRACTION JOINTS WILL BE REQUIRED FOR SEGMENTS LESS THAN 3.5m IN LENGTH.

PAY LENGTH = 144.5 METERS

PROJECT NO. R-0609IA

GUILFORD COUNTY

STATION: 38+45.624-L-

SHEET 3 OF 5

STATE OF NORTH CAROLINA
DEPARTMENT OF TRANSPORTATION
RALEIGH

STANDARD

2 BAR METAL RAIL

NORTH CAROLINA PROFESSIONAL SEAL 23371 ENGINEER VIPUL A. PATEL 5/22/06

REVISIONS						SHEET NO.
NO.	BY:	DATE:	NO.	BY:	DATE:	S-91
1			3			TOTAL SHEETS
2			4			321

ASSEMBLED BY : J.P. ADAMS	DATE : 1/14/05	
CHECKED BY : M.K. BEARD	DATE : 2/05	
DRAWN BY : EEM 6/94	REV. 8/16/99	RWW/LES
CHECKED BY : RGW 6/94	REV. 10/17/00	LES/RDR
	REV. 5/7/03	RWW/JTE

STR. #3

STD. NO. BMR3SM

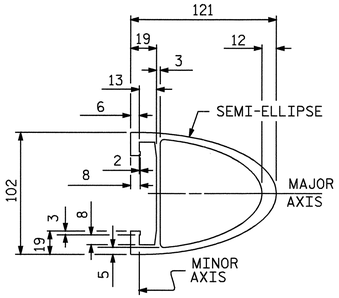

RAIL SECTION

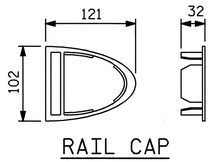

RAIL CAP

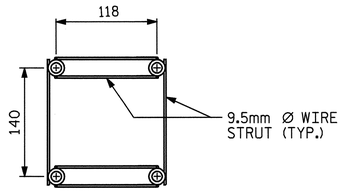

PLAN

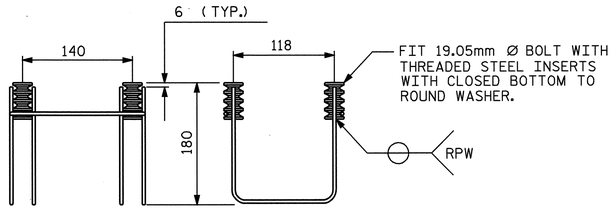

SIDE VIEW ELEVATION

MINIMUM LENGTH OF THREADS IN INSERT (FERRULE) : 44mm

4-BOLT METAL RAIL ANCHOR ASSEMBLY

(79 ASSEMBLIES REQUIRED)

NOTES

STRUCTURAL CONCRETE ANCHOR ASSEMBLY

THE STRUCTURAL CONCRETE ANCHOR ASSEMBLY SHALL CONSIST OF THE FOLLOWING COMPONENTS:

A. FERRULES SHALL BE MADE FROM STEEL MEETING THE REQUIREMENTS OF AASHTO M169, GRADE 12L14 AND SHALL HAVE A MINIMUM LENGTH OF THREADS OF 51mm FOR 19mm FERRULES.

B. 4 - 19.05mm Ø X 64mm BOLTS WITH WASHERS. BOLTS SHALL CONFORM TO THE REQUIREMENTS OF ASTM A307. BOLTS AND WASHERS SHALL BE GALVANIZED. AT THE CONTRACTOR'S OPTION, STAINLESS STEEL BOLTS AND WASHERS MAY BE USED AS AN ALTERNATE FOR THE 19.05mm Ø X 64mm GALVANIZED BOLTS AND WASHERS. THEY SHALL CONFORM TO OR EXCEED THE MECHANICAL REQUIREMENTS OF ASTM A307. THE USE OF THIS ALTERNATE SHALL BE APPROVED BY THE ENGINEER.

C. WIRE STRUT SHOWN IN THE CONCRETE ANCHOR ASSEMBLY DETAIL IS THE MINIMUM ALLOWABLE SIZE AND SHALL HAVE A MINIMUM TENSILE STRENGTH OF 689 MPa. AS AN OPTION, A 11mm Ø WIRE STRUT WITH A TENSILE STRENGTH OF 620 MPa. IS ACCEPTABLE.

D. THE METAL RAIL ANCHOR ASSEMBLIES TO BE HOT DIPPED GALVANIZED TO CONFORM TO REQUIREMENTS OF AASHTO M111.

E. THE COST OF THE METAL RAIL ANCHOR ASSEMBLY WITH BOLTS AND WASHERS COMPLETE IN PLACE SHALL BE INCLUDED IN THE PRICE BID FOR METERS OF METAL RAIL.

F. BOLTS TO BE TIGHTENED ONE-HALF TURN WITH A WRENCH FROM A FINGER-TIGHT POSITION.

THE CONTRACTOR, AT HIS OPTION, MAY USE ADHESIVELY ANCHORED ANCHOR BOLTS IN PLACE OF THE METAL ANCHOR ASSEMBLY. THE YIELD LOAD OF THE 19.05mm Ø BOLT IS 44.5 kN. FIELD TESTING OF THE ADHESIVE BONDING SYSTEM IS REQUIRED. SEE SPECIAL PROVISIONS FOR "ADHESIVELY ANCHORED ANCHOR BOLTS OR DOWELS".

WHEN ADHESIVELY ANCHORED ANCHOR BOLTS ARE USED, BOLTS SHALL MEET THE REQUIREMENTS OF ASTM F593 ALLOY 304 STAINLESS STEEL WITH MINIMUM 517 MPa ULTIMATE STRENGTH. NUTS SHALL MEET THE REQUIREMENTS OF ASTM F594 ALLOY 304 STAINLESS STEEL AND WASHERS SHALL MEET THE REQUIREMENTS OF ASTM F844 EXCEPT THEY SHALL BE MADE FROM ALLOY 304 STAINLESS STEEL.

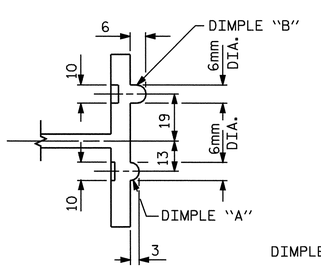

SECTION B - B

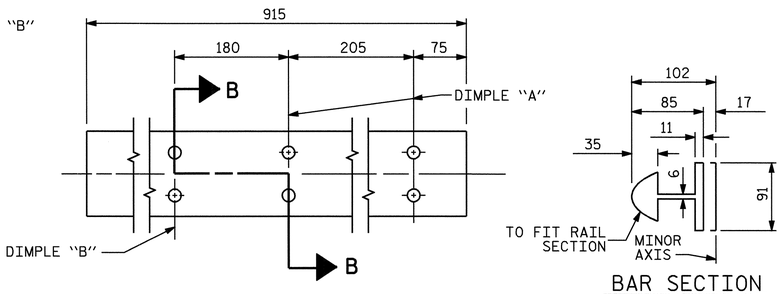

BAR SECTION

EXPANSION BAR DETAILS

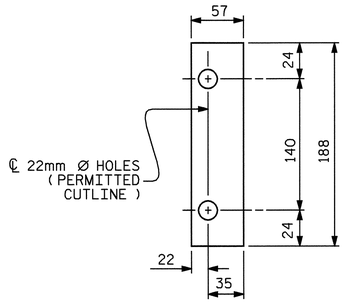

FRONT PLATE

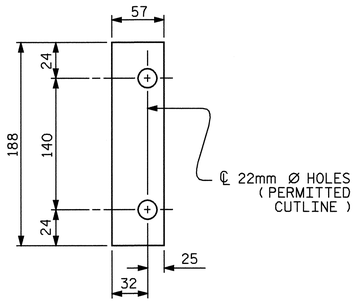

REAR PLATE

SHIM DETAILS

NOTE :
SHIMS MAY BE CUT ALONG PERMITTED CUTLINE OR SLOTTED TO EDGE OF PLATE TO FACILITATE PLACEMENT.

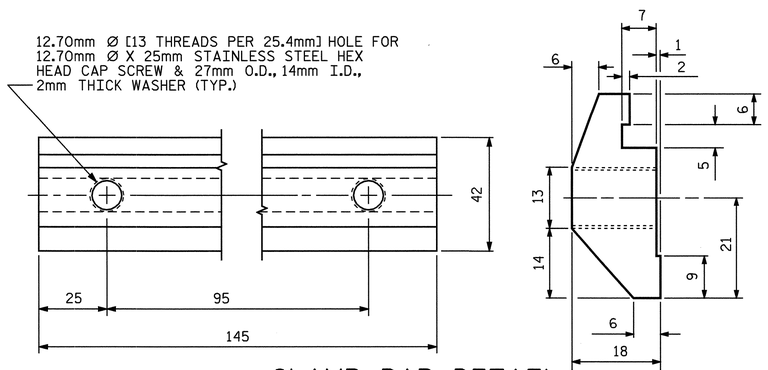

CLAMP BAR DETAIL

(4 REQUIRED PER POST)

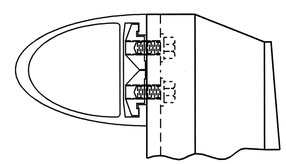

CLAMP ASSEMBLY

PROJECT NO. R-0609IA

GUILFORD COUNTY

STATION: 38+45.624-L-

SHEET 4 OF 5

STATE OF NORTH CAROLINA
DEPARTMENT OF TRANSPORTATION
RALEIGH

STANDARD

2 BAR METAL RAIL

NORTH CAROLINA PROFESSIONAL SEAL 23371 ENGINEER VIPUL A. PATEL
5/23/06

REVISIONS						SHEET NO.
NO.	BY:	DATE:	NO.	BY:	DATE:	S-92
1			3			TOTAL SHEETS
2			4			321

ASSEMBLED BY : J.P. ADAMS	DATE : 1/14/05	
CHECKED BY : M.K. BEARD	DATE : 2/05	
DRAWN BY : EEM 6/94	REV. 8/16/99	RAL/LES
CHECKED BY : RGW 6/94	REV. 10/17/00	LES/RDR
	REV. 5/7/03	RWW/JTE

STR. #3

STD. NO. BMR4SM

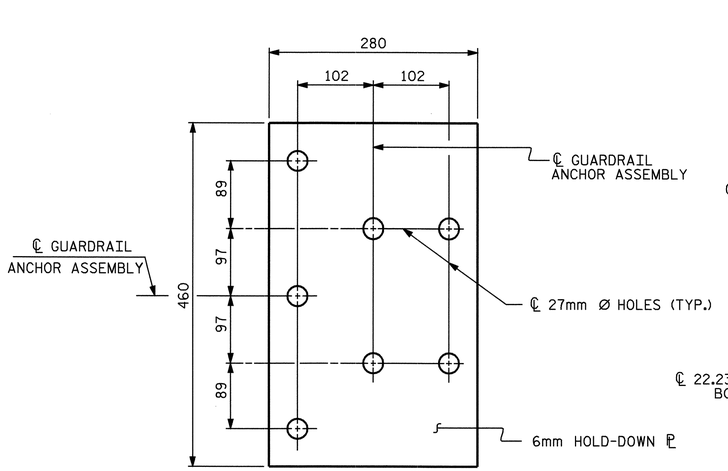

PLAN

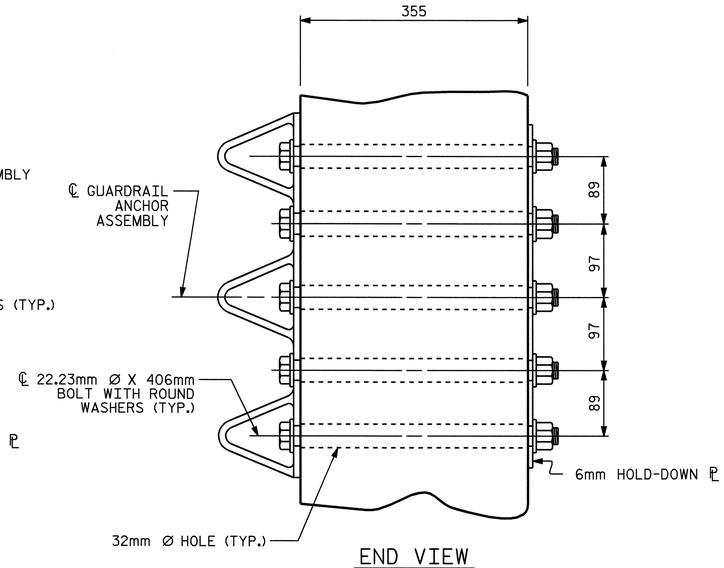

END VIEW

GUARDRAIL ANCHOR ASSEMBLY DETAILS

NOTES

THE GUARDRAIL ANCHOR ASSEMBLY SHALL CONSIST OF A 6mm HOLD DOWN PLATE AND 7 - 22.23mm Ø BOLTS WITH NUTS AND WASHERS.

THE HOLD-DOWN PLATE SHALL CONFORM TO AASHTO M270 GRADE 250. AFTER FABRICATION, THE HOLD-DOWN PLATE SHALL BE HOT-DIP GALVANIZED IN ACCORDANCE WITH AASHTO M111.

BOLTS SHALL CONFORM TO THE REQUIREMENTS OF ASTM A307 AND NUTS SHALL CONFORM TO THE REQUIREMENTS OF AASHTO M291M. BOLTS, NUTS AND WASHERS SHALL BE GALVANIZED. AT THE CONTRACTOR'S OPTION, STAINLESS STEEL BOLTS, NUTS AND WASHERS MAY BE USED AS AN ALTERNATE FOR THE 22.23mm Ø GALVANIZED BOLTS, NUTS AND WASHERS. THEY SHALL CONFORM TO OR EXCEED THE MECHANICAL REQUIREMENTS OF ASTM A307. THE USE OF THIS ALTERNATE SHALL BE APPROVED BY THE ENGINEER.

AFTER INSTALLATION, THE EXPOSED THREAD OF THE BOLT SHALL BE BURRED WITH A SHARP POINTED TOOL.

THE COST OF THE GUARDRAIL ANCHOR ASSEMBLIES WITH BOLTS, NUTS AND WASHERS COMPLETE IN PLACE, SHALL BE INCLUDED IN THE VARIOUS PAY ITEMS.

THE VERTICAL REINFORCING BARS MAY BE SHIFTED SLIGHTLY IN THE END POST TO CLEAR ASSEMBLY BOLTS.

THE 32mm Ø HOLES SHALL BE FORMED OR DRILLED WITH A CORE BIT. IMPACT TOOLS WILL NOT BE PERMITTED. ANY CONCRETE DAMAGED BY THIS WORK SHALL BE REPAIRED TO THE SATISFACTION OF THE ENGINEER.

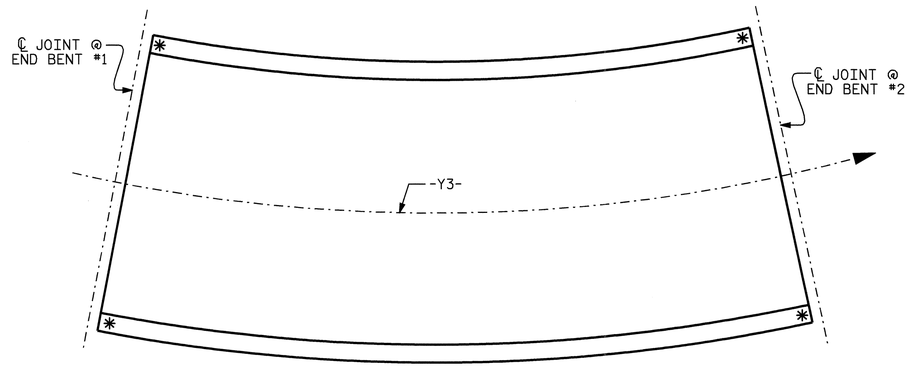

SKETCH SHOWING POINTS OF ATTACHMENT

*LOCATION OF GUARDRAIL ATTACHMENT

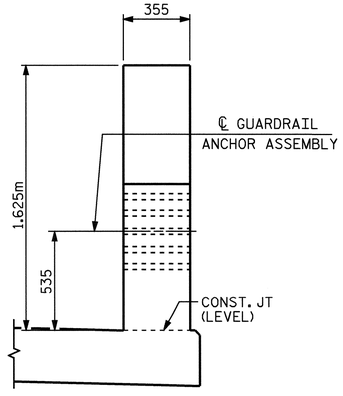

END VIEW
(TWO BAR METAL RAIL)

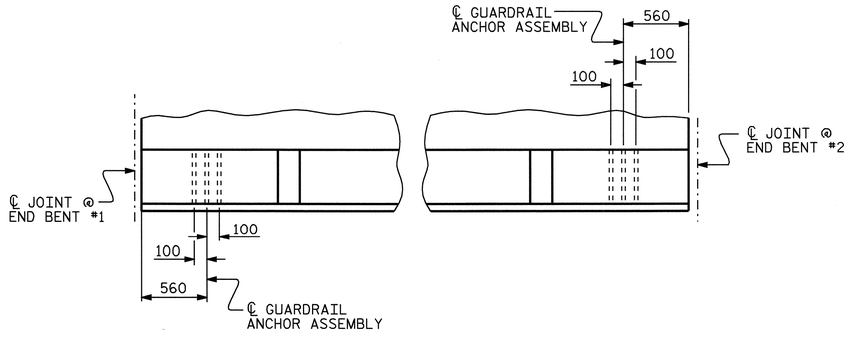

PLAN

LOCATION OF GUARDRAIL ANCHOR AT END POST

PROJECT NO. R-0609IA
GUILFORD COUNTY
STATION: 38+45.624-L-

SHEET 5 OF 5

STATE OF NORTH CAROLINA
DEPARTMENT OF TRANSPORTATION
RALEIGH
STANDARD
GUARDRAIL ANCHORAGE DETAILS FOR METAL RAILS

ASSEMBLED BY : J.P. ADAMS	DATE : 1/14/05
CHECKED BY : M.K. BEARD	DATE : 2/05

DRAWN BY : EEM 6/94	REV. 8/16/99	RWW/LES
CHECKED BY : RGW 6/94	REV. 10/17/00	RWW/LES
	REV. 5/7/03	RWW/JTE

REVISIONS						SHEET NO.
NO.	BY:	DATE:	NO.	BY:	DATE:	S-93
1			3			TOTAL SHEETS
2			4			321

NORTH CAROLINA PROFESSIONAL SEAL 23371 ENGINEER VIPUL A. PATEL 5/22/06

STR. #3

STD. NO. BMR8SM

22-MAY-2006 08:03
T:\Structures\Final Plans\Str3\R-0609IA_sd_MR_03.dgn
klayne

SUPERSTRUCTURE REINFORCING STEEL LENGTHS ARE BASED ON THE FOLLOWING MINIMUM SPLICE LENGTHS

BAR SIZE	SUPERSTRUCTURE EXCEPT APPROACH SLABS, PARAPET, AND BARRIER RAIL		APPROACH SLABS		PARAPET AND BARRIER RAIL
	EPOXY COATED	UNCOATED	EPOXY COATED	UNCOATED	
#13	610	540	610	540	840
#16	770	660	770	660	1050
#19	920	790	1190	790	1330
#22	1580	1060			
#25	2080	1390			

GROOVING BRIDGE FLOORS

BRIDGE DECK	711.5 m^2
APPROACH SLABS	152.1 m^2
TOTAL	863.6 m^2

REINFORCING BAR SCHEDULE

SPAN A-B

BAR	NO.	SIZE	TYPE	LENGTH	WEIGHT
✱A1	473	16	STR.	11200	8222
A2	473	16	STR.	11200	8222
✱B1	72	19	STR.	11180	1799
✱B2	142	19	STR.	13820	4386
✱B3	72	19	STR.	15260	2456
B4	205	16	STR.	15680	4989
✱G1	2	16	STR.	11200	35
✱K1	8	16	1	2360	29
✱K2	8	16	2	2600	32
✱K3	12	16	STR.	2900	54
✱S1	54	13	3	1140	61

REINFORCING STEEL (Kgs) = 13211

✱EPOXY COATED REINFORCING STEEL (Kgs) = 17074

CLASS AA CONCRETE (m3)

POUR #1 = 55.2

POUR #2 = 171.3

TOTAL = 226.5

BAR TYPES

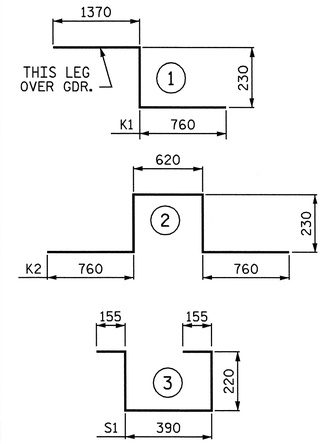

ALL BAR DIMENSIONS ARE OUT TO OUT.

QUANTITIES FOR 2 BAR METAL RAIL ARE NOT INCLUDED.

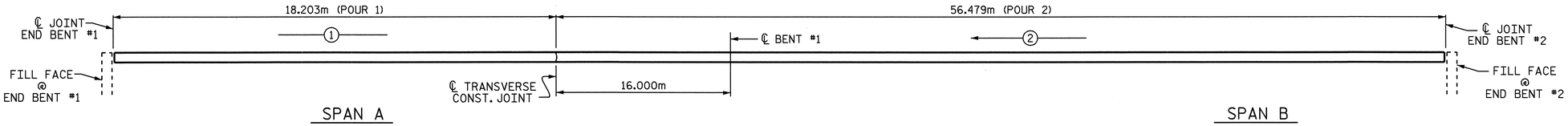

LAYOUT FOR POURING SEQUENCE OF REINFORCED CONCRETE DECK SLAB

SHOWS DIRECTION OF POUR

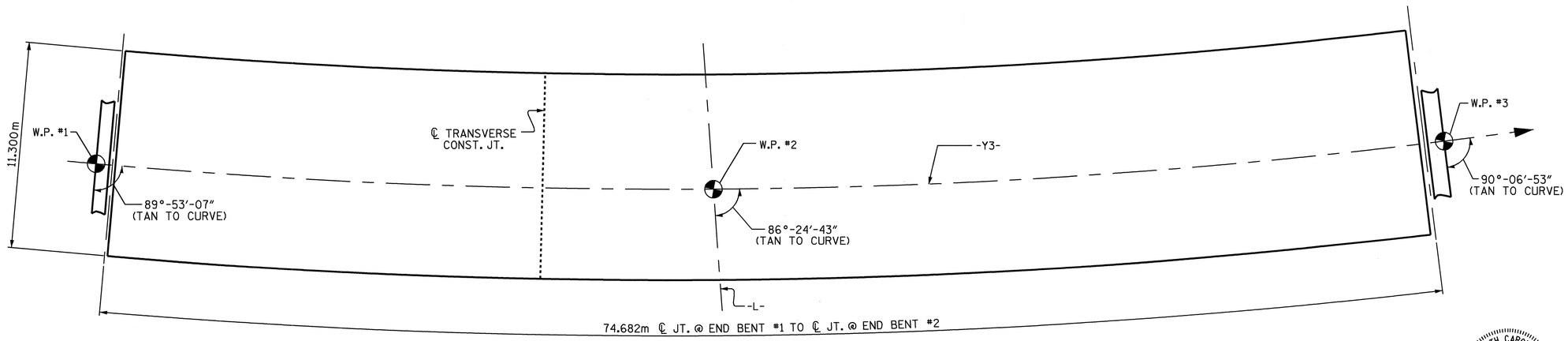

LAYOUT FOR COMPUTING AREA OF REINFORCED CONCRETE DECK SLAB

AREA CONCRETE DECK SLAB = 843.6 m^2

NORTH CAROLINA PROFESSIONAL SEAL 23371 ENGINEER VIRAL A. PATEL
11/14/06

PROJECT NO. R-0609IA

GUILFORD COUNTY

STATION 38+45.624 -L-

STATE OF NORTH CAROLINA
DEPARTMENT OF TRANSPORTATION
RALEIGH

SUPERSTRUCTURE

BILL OF MATERIAL

REVISIONS						SHEET NO.
NO.	BY:	DATE:	NO.	BY:	DATE:	S-94
1			3			TOTAL SHEETS
2			4			321

DRAWN BY : J.P. ADAMS DATE : 1/28/05
CHECKED BY : M.K. BEARD DATE : 2/05

16-NOV-2006 08:02
R:\Structures\Final Plans\Str3\R-0609IA_sd_BM_03.dgn
jpadams

STR. #3

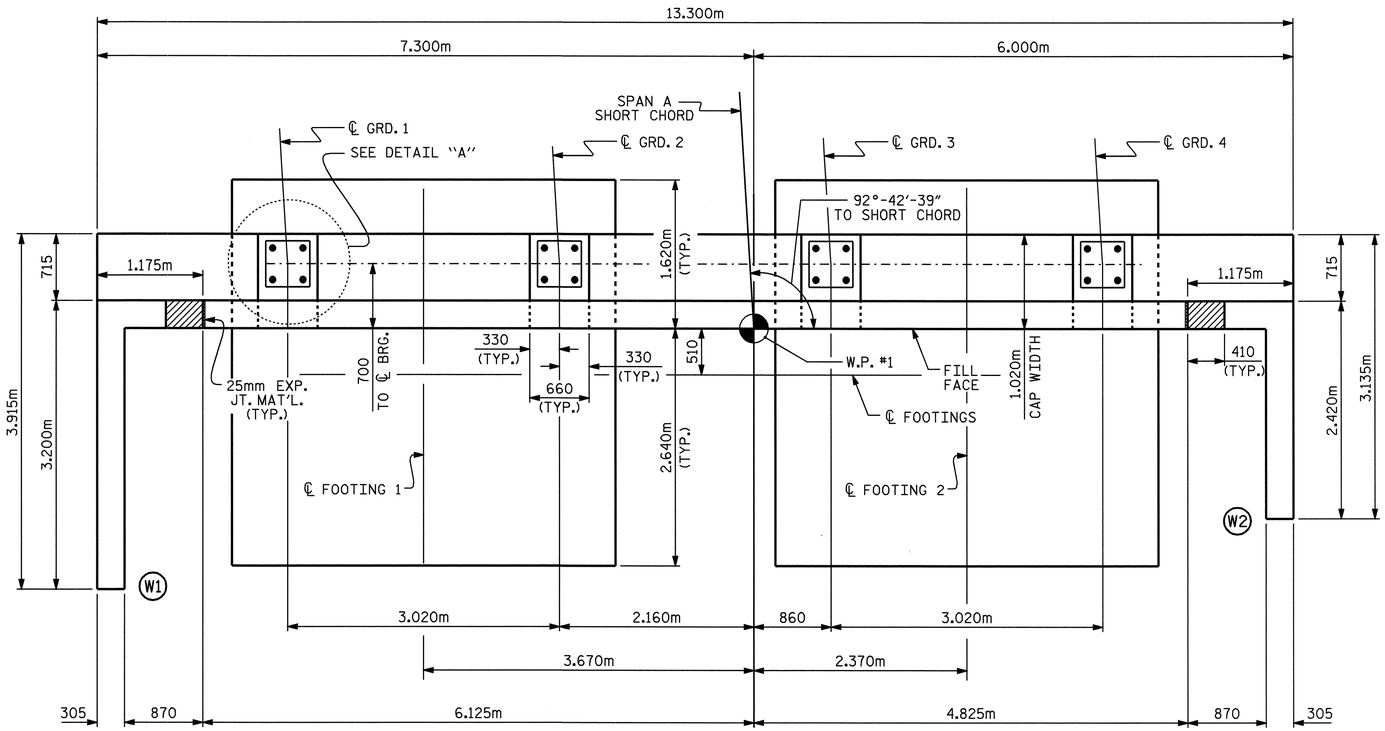

PLAN

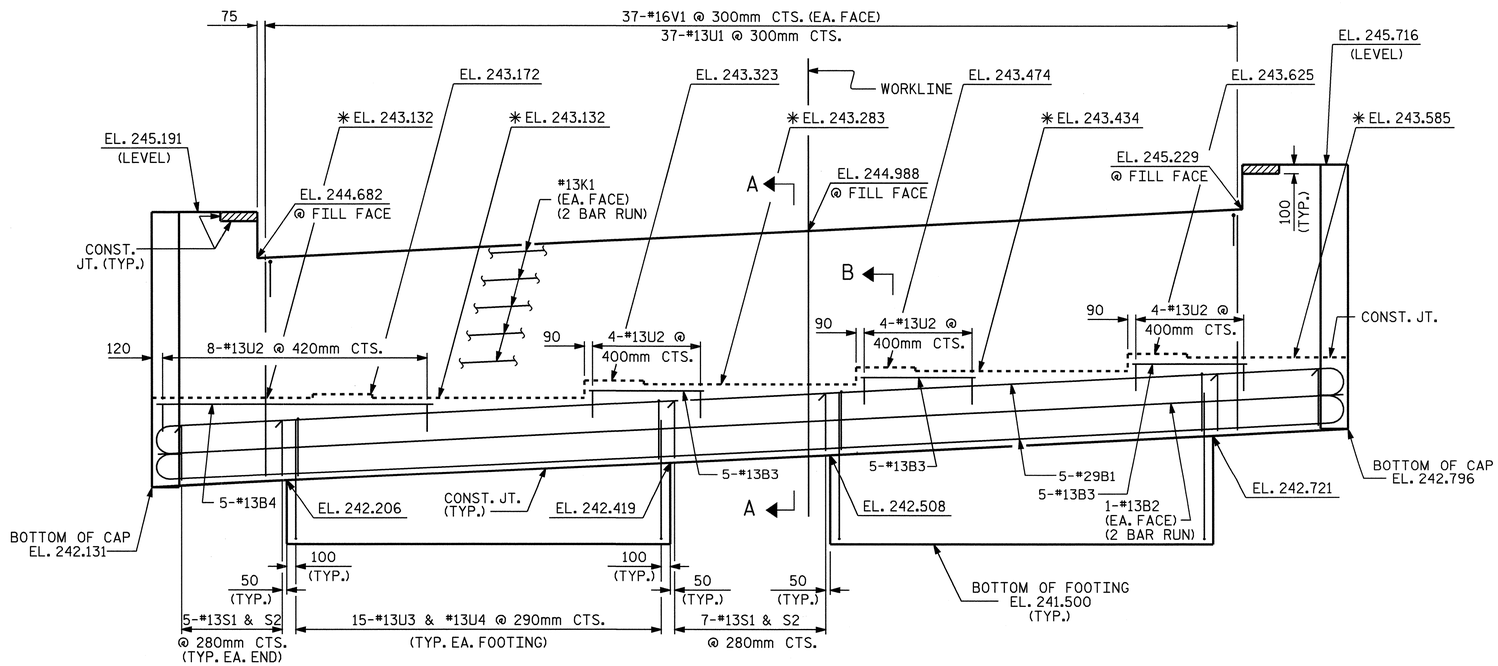

ELEVATION

*SEE SHEET 3 OF 4 FOR LOCATION OF ELEVATION.
FOR ADDITIONAL REINFORCING STEEL IN FOOTINGS, SEE SHEET 3 OF 4.

NOTES

STIRRUPS IN CAP MAY BE SHIFTED AS NECESSARY TO CLEAR ANCHOR BOLTS.

FOR EPOXY PROTECTIVE COATING, SEE SPECIAL PROVISIONS.

BACKWALL SHALL BE PLACED BEFORE APPLYING THE EPOXY PROTECTIVE COATING.

THE TOP SURFACE OF THE CAP EXCEPT THE BRIDGE SEAT BUILDUPS SHALL BE SLOPED TRANSVERSELY FROM THE FILL FACE TO THE BACK FACE AT THE RATE OF 2%.

THE CONTRACTOR SHALL PROVIDE FOR INSTALLATION OF THE 102mm DIAMETER DRAIN PIPE THROUGH THE WING WALL AS REQUIRED FOR REINFORCED BRIDGE APPROACH FILLS, SEE THE ROADWAY PLANS. REINFORCING STEEL IN THE WING WALL MAY BE SHIFTED AS NECESSARY TO CLEAR THE DRAIN PIPE.

THE CONCRETE IN THE SHADED AREA OF THE WING SHALL BE POURED AFTER THE JOINT BETWEEN THE DECK AND THE APPROACH SLAB HAS BEEN SAWED AND THE PARAPET AND END POST ARE CAST IF SLIP FORMING IS USED.

THE TOP SURFACE OF THE END BENT CAP SHALL BE CURED IN ACCORDANCE WITH THE STANDARD SPECIFICATIONS EXCEPT THE MEMBRANE CURING COMPOUND METHOD SHALL NOT BE USED.

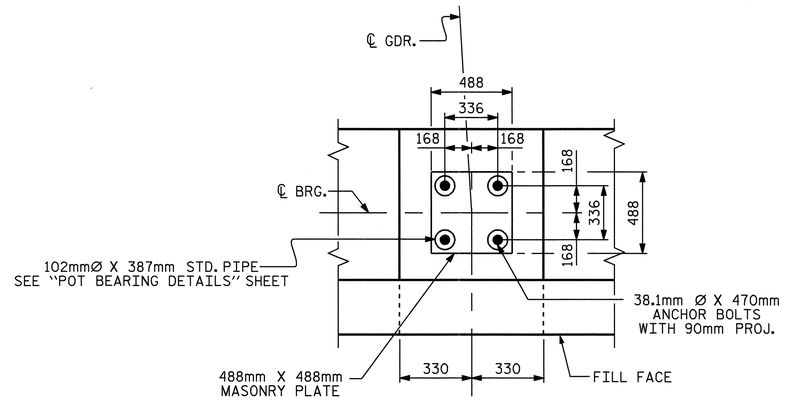

DETAIL "A"
TYPICAL EACH LOCATION

SPLICE CHART		
B2	#13	740mm
K1	#13	740mm

PROJECT NO. R-0609IA
GUILFORD COUNTY
STATION: 38+45.624-L-

SHEET 1 OF 4

STATE OF NORTH CAROLINA
DEPARTMENT OF TRANSPORTATION
RALEIGH

SUBSTRUCTURE

END BENT #1

NORTH CAROLINA PROFESSIONAL SEAL 23371 ENGINEER V. A. PATEL
5/22/06

REVISIONS						SHEET NO.
NO.	BY:	DATE:	NO.	BY:	DATE:	S-95
1			3			TOTAL SHEETS
2			4			321

DRAWN BY : J.P. ADAMS DATE : 3/10/05
CHECKED BY : M.K. BEARD DATE : 3/05

22-MAY-2006 08:02
T:\Structures\Final Plans\Str3\R-0609IA_sd_EBTS_03.dgn
klayne

STR. #3

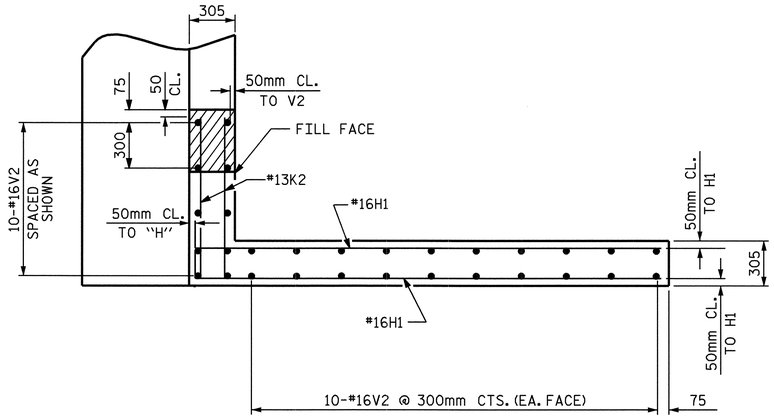

PLAN W1

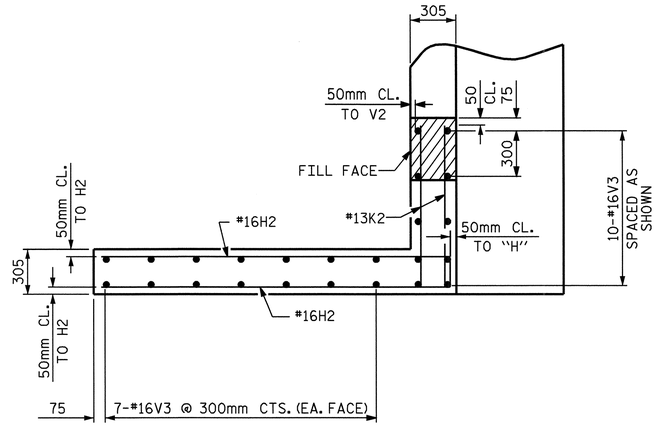

PLAN W2

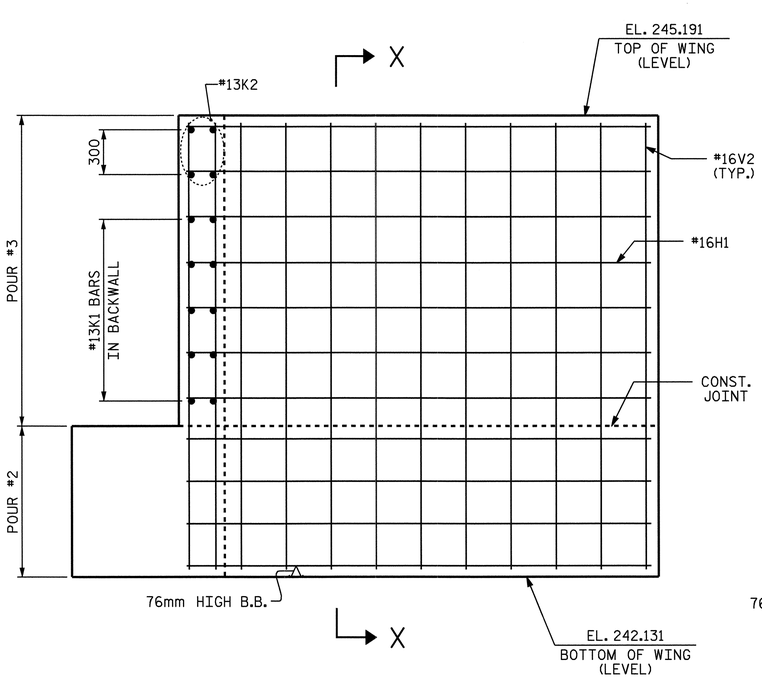

ELEVATION W1

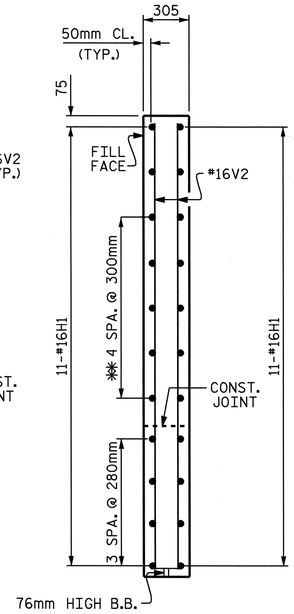

X-X

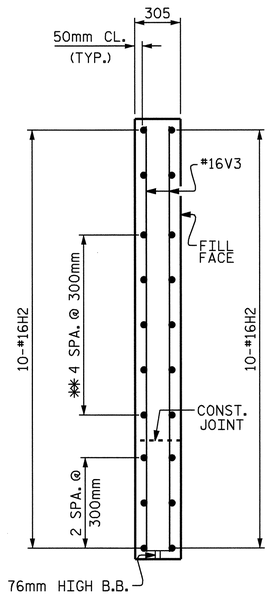

Y-Y

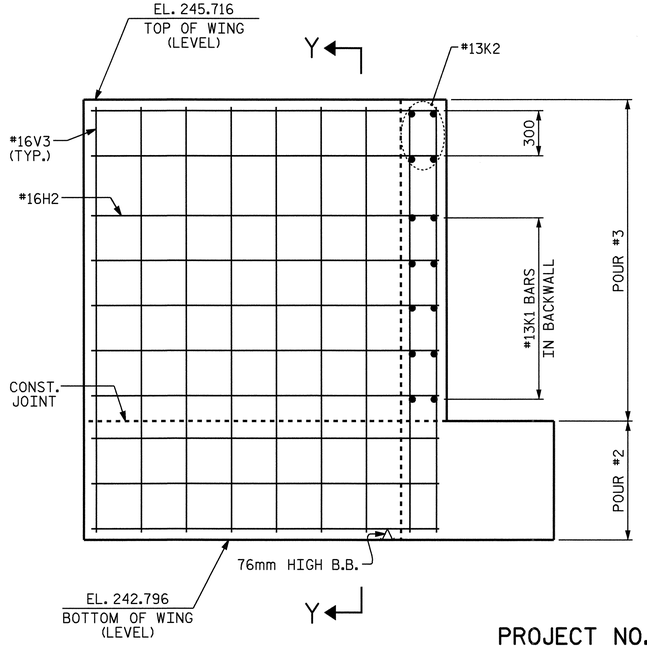

ELEVATION W2

✱✱ THESE BARS TO MATCH K1 BARS IN BACKWALL

PROJECT NO. R-0609IA

GUILFORD COUNTY

STATION: 38+45.624-L-

SHEET 2 OF 4

STATE OF NORTH CAROLINA
DEPARTMENT OF TRANSPORTATION
RALEIGH

SUBSTRUCTURE

END BENT #1

REVISIONS						SHEET NO.
NO.	BY:	DATE:	NO.	BY:	DATE:	S-96
1			3			TOTAL SHEETS
2			4			321

STR. #3

NORTH CAROLINA PROFESSIONAL SEAL 23371 ENGINEER VIPUL A. PATEL
3/22/06

DRAWN BY : J.P. ADAMS DATE : 3/17/05
CHECKED BY : M.K. BEARD DATE : 3/05

22-MAY-2006 08:02
T:\Structures\Final Plans\Str3\R-0609IA_sd_EBTS_03.dgn
klayne

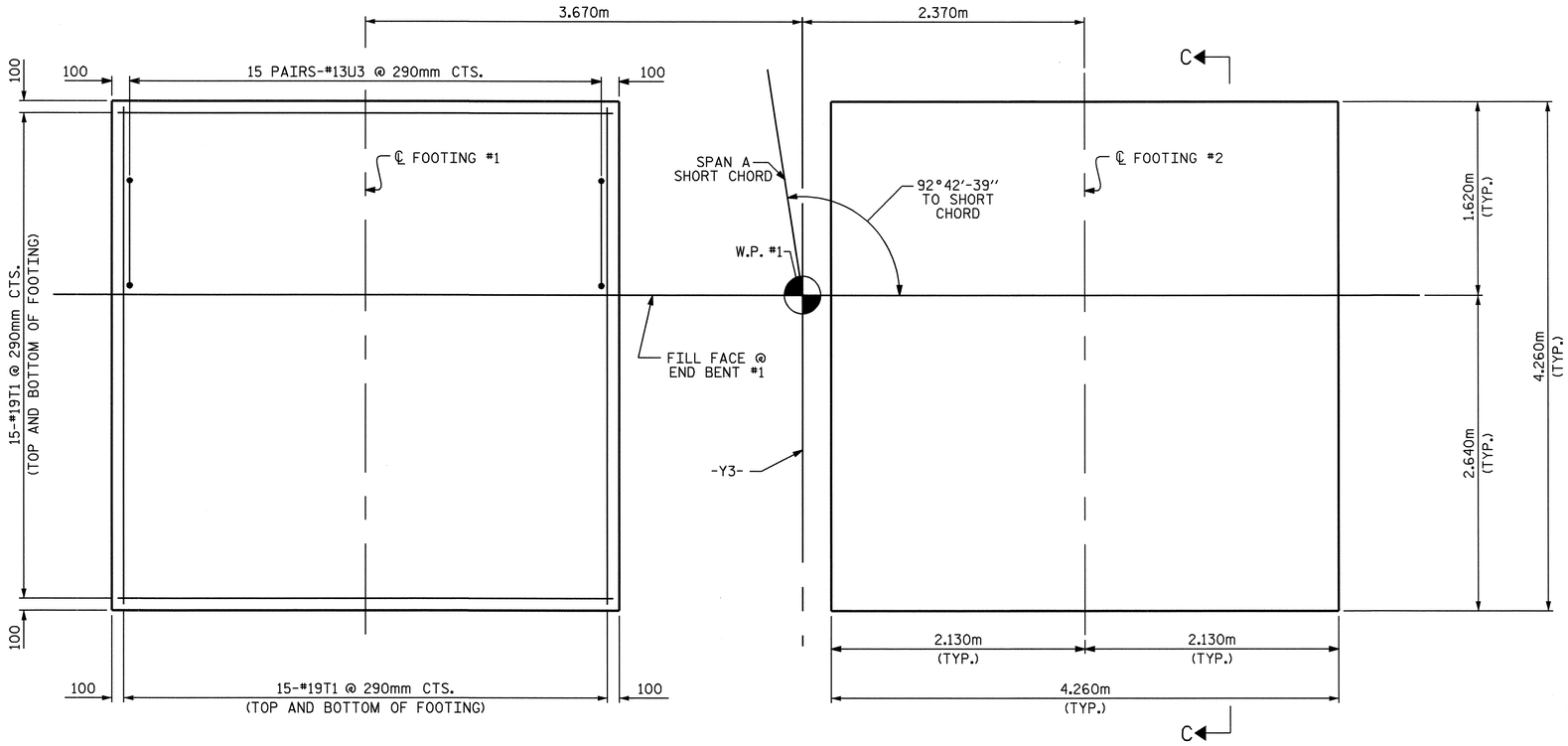

PLAN OF FOOTINGS

FOOTINGS AND REINFORCING STEEL ARE TYPICAL.

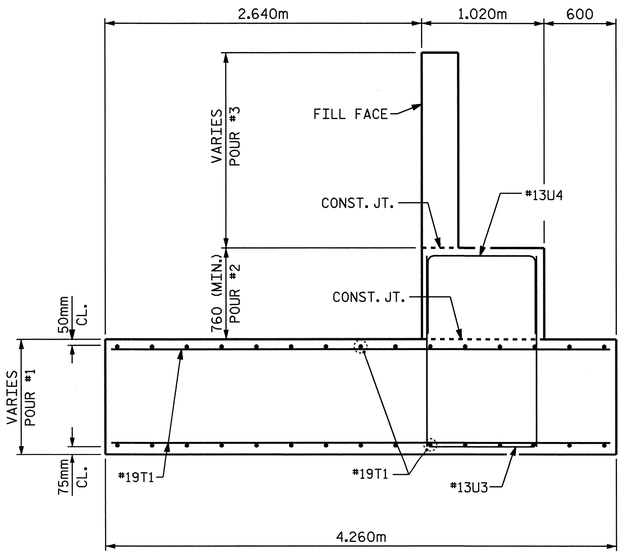

SECTION C-C

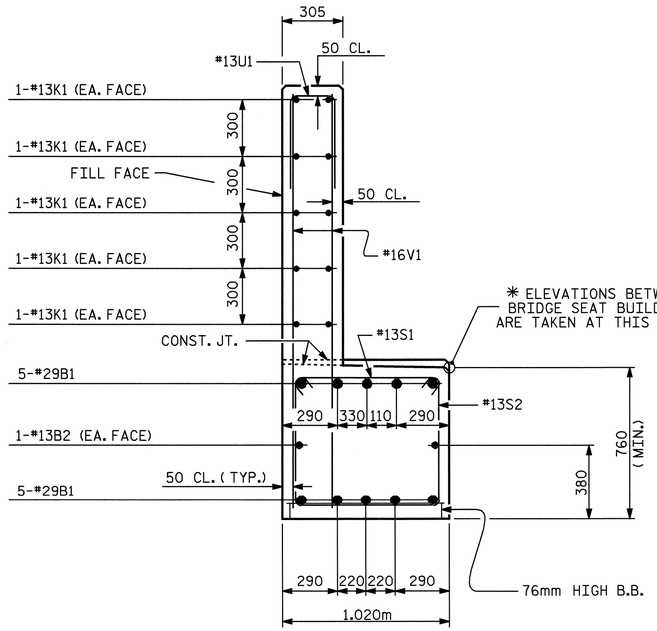

SECTION A-A

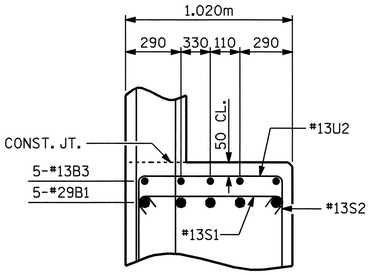

PARTIAL SECTION B

PROJECT NO. R-0609IA

GUILFORD COUNTY

STATION: 38+45.624-L-

SHEET 3 OF 4

STATE OF NORTH CAROLINA
DEPARTMENT OF TRANSPORTATION
RALEIGH

SUBSTRUCTURE

END BENT #1

NORTH CAROLINA PROFESSIONAL SEAL 23371 ENGINEER VIPUL A. PATEL
5/22/06

REVISIONS						SHEET NO.
NO.	BY:	DATE:	NO.	BY:	DATE:	S-97
1			3			TOTAL SHEETS
2			4			321

DRAWN BY : J.P. ADAMS DATE : 3/4/05
CHECKED BY : M.K. BEARD DATE : 3/05

22-MAY-2006 08:02
T:\Structures\Final Plans\Str3\R-0609IA_sd_EBTS_03.dgn
klayne

STR. #3

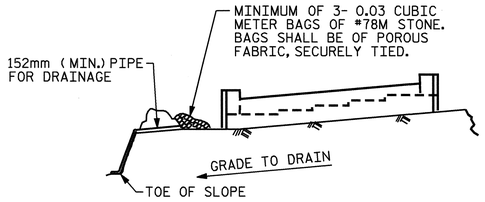

BAGGED STONE AND PIPE SHALL BE PLACED IMMEDIATELY AFTER COMPLETION OF END BENT EXCAVATION. PIPE MAY BE EITHER CONCRETE, CORRUGATED STEEL, CORRUGATED ALUMINUM ALLOY, OR CORRUGATED PLASTIC. PERFORATED PIPE WILL NOT BE ALLOWED.

BAGGED STONE SHALL REMAIN IN PLACE UNTIL THE ENGINEER DIRECTS THAT IT BE REMOVED. THE CONTRACTOR SHALL REMOVE AND DISPOSE OF SILT ACCUMULATIONS AT BAGGED STONE WHEN SO DIRECTED BY THE ENGINEER. BAGS SHALL BE REMOVED AND REPLACED WHENEVER THE ENGINEER DETERMINES THAT THEY HAVE DETERIORATED AND LOST THEIR EFFECTIVENESS.

NO SEPARATE PAYMENT WILL BE MADE FOR THIS WORK AND THE ENTIRE COST OF THIS WORK SHALL BE INCLUDED IN THE UNIT CONTRACT PRICE BID FOR THE SEVERAL PAY ITEMS.

TEMPORARY DRAINAGE AT END BENT

BAR TYPES

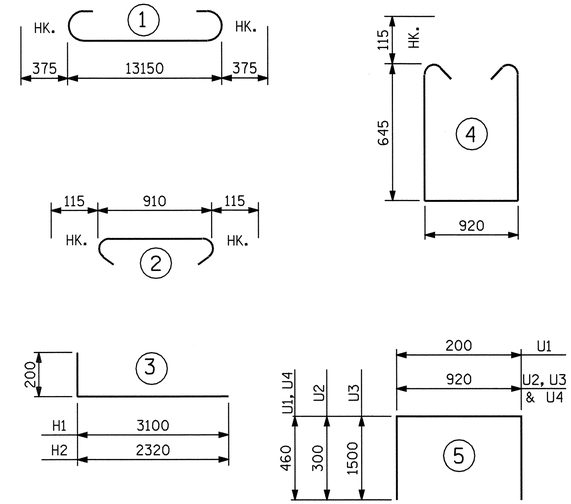

ALL BAR DIMENSIONS ARE OUT TO OUT.

BILL OF MATERIAL
END BENT #1

BAR	NO.	SIZE	TYPE	LENGTH	WEIGHT
B1	10	#29	1	13900	703
B2	4	#13	STR	7020	28
B3	15	#13	STR	1280	19
B4	5	#13	STR	3080	15
H1	22	#16	3	3300	113
H2	20	#16	3	2520	78
K1	20	#13	STR	7020	140
K2	8	#13	STR	1060	8
S1	17	#13	2	1140	19
S2	17	#13	4	2440	41
U1	37	#13	5	1120	41
U2	20	#13	5	1520	30
U3	30	#13	5	3920	117
U4	30	#13	5	1840	55
V1	74	#16	STR	2380	273
V2	30	#16	STR	2960	138
V3	24	#16	STR	2820	105
T1	120	#19	STR	4160	1116

REINFORCING STEEL = 3039 KG

CLASS A CONCRETE BREAKDOWN:

POUR #1: (FOOTINGS) 35.0 m³

POUR #2: (CAP & BOTTOM OF WINGS) 13.7 m³

POUR #3: (TOP OF WINGS & BACKWALL) 10.2 m³

CLASS A CONCRETE TOTAL 58.9 m³

FOUNDATION EXCAVATION LUMP SUM

PROJECT NO. R-0609IA

GUILFORD COUNTY

STATION: 38+45.624-L-

SHEET 4 OF 4

NORTH CAROLINA PROFESSIONAL SEAL 23371 ENGINEER VIPUL A. PATEL
5/12/06

STATE OF NORTH CAROLINA
DEPARTMENT OF TRANSPORTATION
RALEIGH

SUBSTRUCTURE

END BENT #1

REVISIONS						SHEET NO.
NO.	BY:	DATE:	NO.	BY:	DATE:	S-98
1			3			TOTAL SHEETS
2			4			321

DRAWN BY : J.P. ADAMS DATE : 3/17/05
CHECKED BY : M.K. BEARD DATE : 3/05

22-MAY-2006 08:02
T:\Structures\Final Plans\Str3\R-0609IA_sd_EBTS_03.dgn
klayne

STR. #3

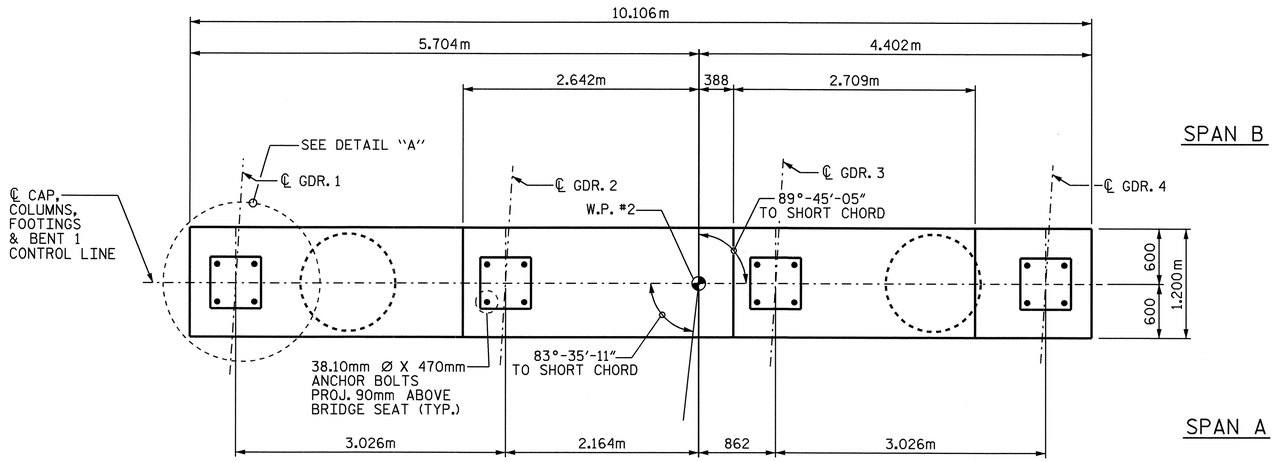

PLAN

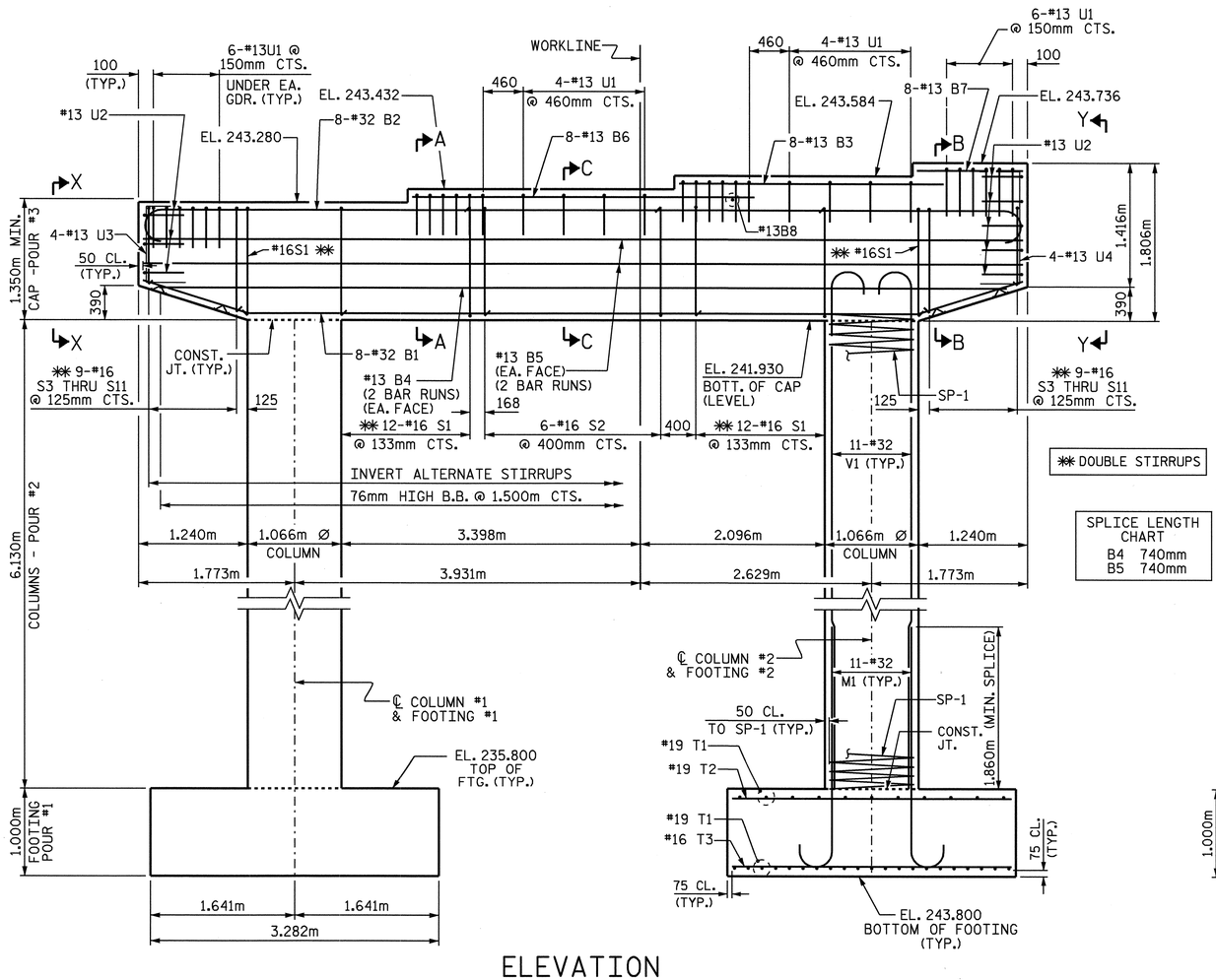

ELEVATION

(REINFORCING STEEL AND DIMENSIONS ARE TYPICAL FOR ALL COLUMNS AND FOOTINGS)

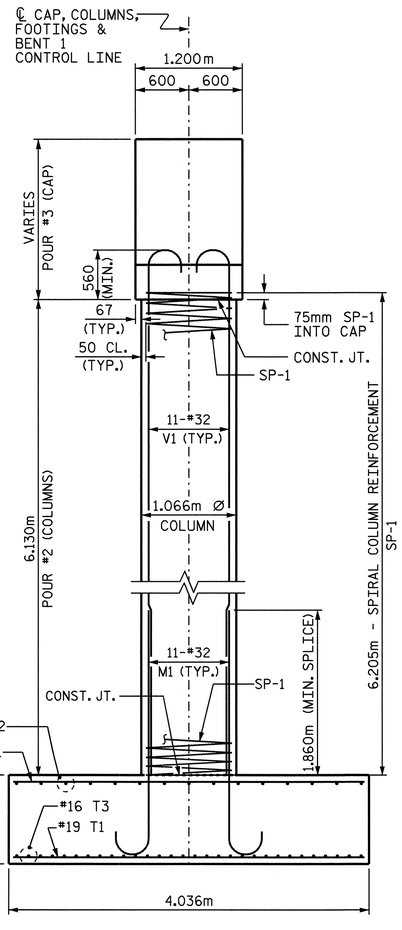

SIDE VIEW

NOTES

STIRRUPS IN CAP MAY BE SHIFTED AS NECESSARY TO CLEAR ANCHOR BOLTS.

HOOKS ON "V" BARS MAY BE TURNED AS NECESSARY FOR PLACING REINFORCING STEEL.

THE CONTRACTOR'S ATTENTION IS CALLED TO THE FACT THAT 'M' BARS, THE LONGITUDINAL REINFORCEMENT FOR THE COLUMN IS DETAILED WITH 1 METER OF EXTRA LENGTH.

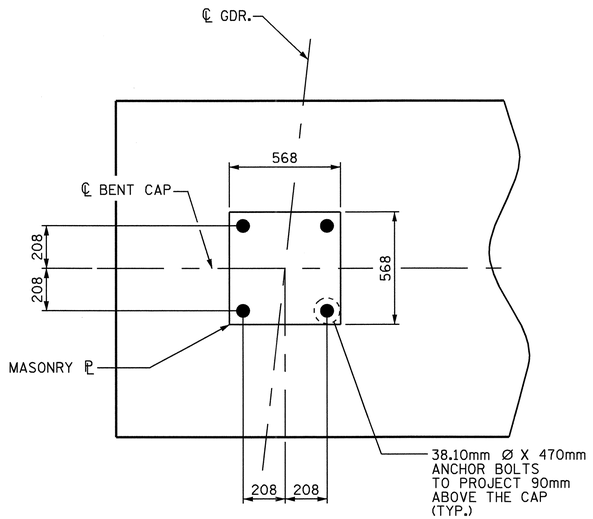

DETAIL "A"

PROJECT NO. R-0609IA

GUILFORD COUNTY

STATION: 38+45.624 -L-

SHEET 1 OF 2

STATE OF NORTH CAROLINA
DEPARTMENT OF TRANSPORTATION
RALEIGH

SUBSTRUCTURE

BENT 1

REVISIONS						SHEET NO.
NO.	BY:	DATE:	NO.	BY:	DATE:	S-99
1			3			TOTAL SHEETS
2			4			321

STR. #3

DRAWN BY : A. K. PATEL DATE : 2/03/05
CHECKED BY : D. V. JOYNER DATE : 2/14/05

07-NOV-2006 08:32
R:\Structures\Final Plans\Str3\R0609IA_SD_BI_03.dgn
kbeard

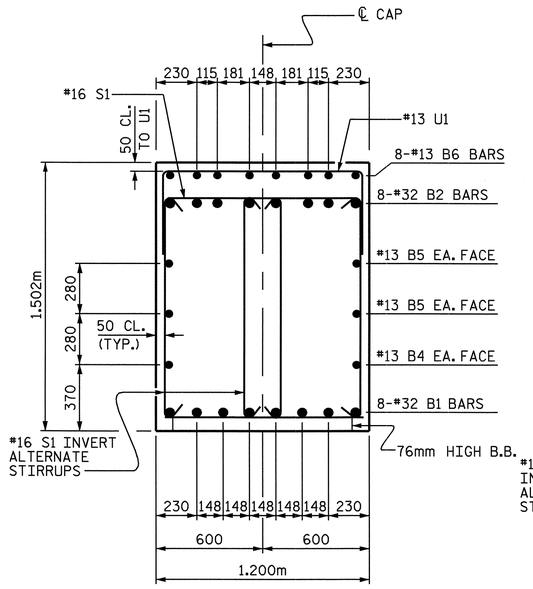

SECTION A-A

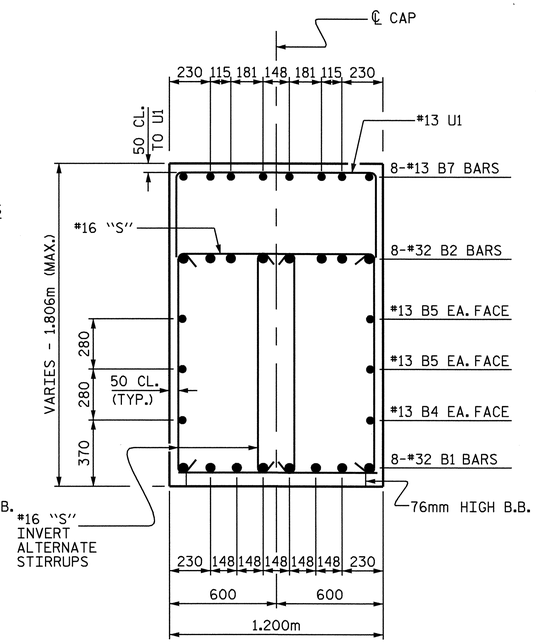

SECTION B-B

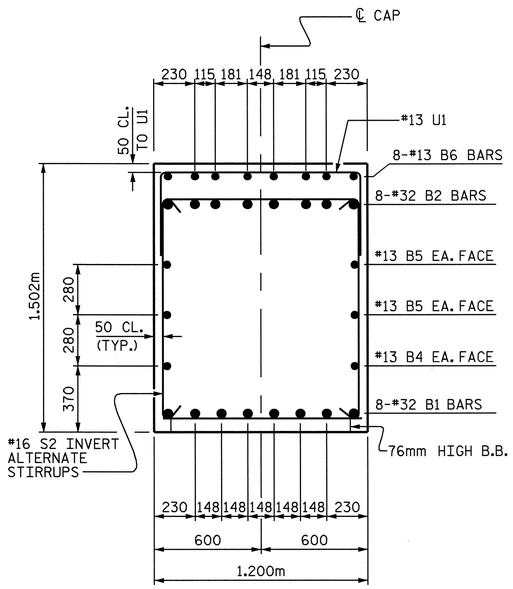

SECTION C-C

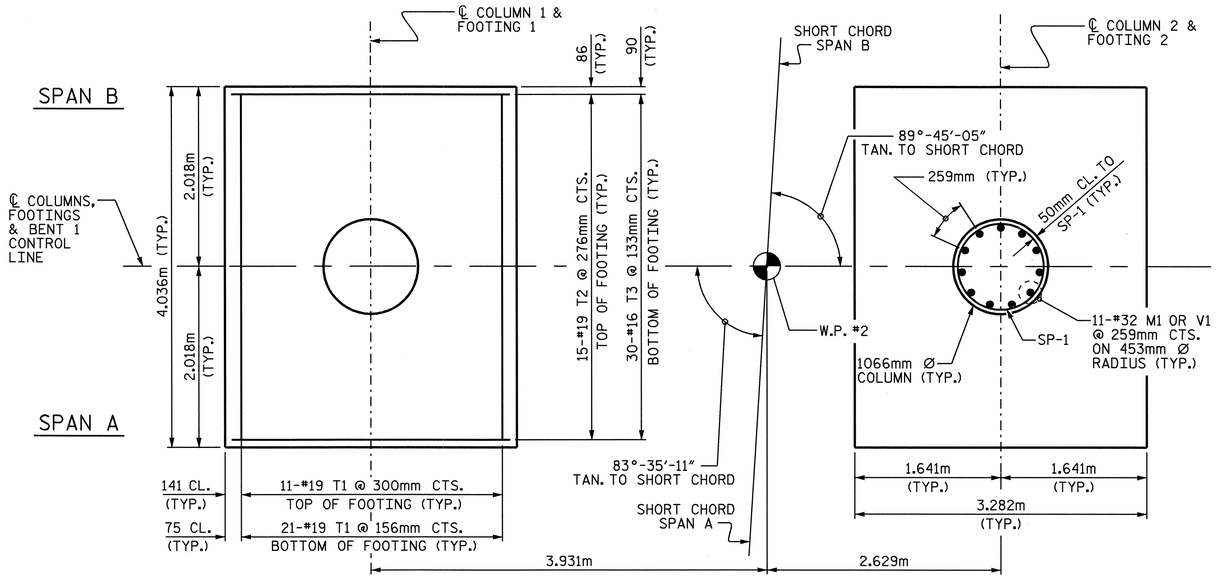

PLAN OF FOOTINGS

PLAN OF COLUMNS

PLAN OF FOOTINGS & COLUMNS

REINFORCING STEEL, DIMENSIONS AND DETAILS ARE TYPICAL FOR EACH COLUMN AND FOOTING UNLESS OTHERWISE NOTED.

BAR TYPES

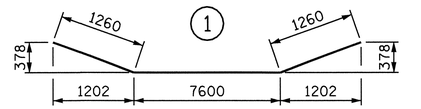

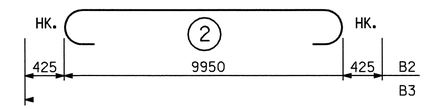

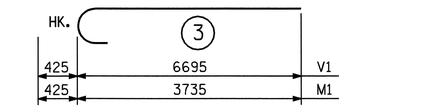

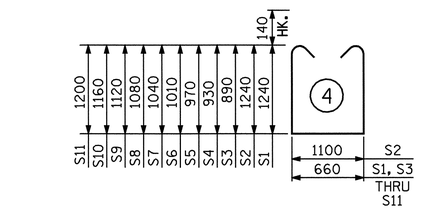

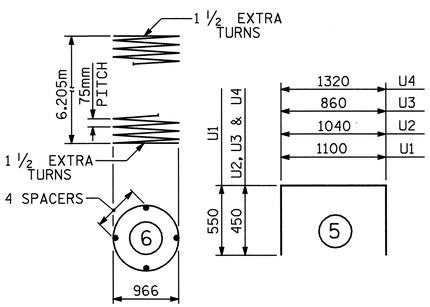

ALL BAR DIMENSIONS ARE OUT TO OUT.

BILL OF MATERIAL
BENT 1

BAR	NO.	SIZE	TYPE	LENGTH	WEIGHT
B1	8	32	1	10120	518
B2	8	32	2	10800	553
B3	8	13	STR	3000	24
B4	4	13	STR	5180	21
B5	8	13	STR	5380	43
B6	8	13	STR	3840	31
B7	8	13	STR	1200	10
B8	1	13	STR	1100	1
M1	22	32	3	4160	586
S1	52	16	4	3420	276
S2	6	16	4	3860	36
S3	4	16	4	2720	17
S4	4	16	4	2800	17
S5	4	16	4	2880	18
S6	4	16	4	2960	18
S7	4	16	4	3020	19
S8	4	16	4	3100	19
S9	4	16	4	3180	20
S10	4	16	4	3260	20
S11	4	16	4	3340	21
T1	64	19	STR	3880	555
T2	30	19	STR	3120	209
T3	60	16	STR	3120	291
U1	32	13	5	2200	70
U2	8	13	5	1940	15
U3	4	13	5	1760	7
U4	4	13	5	2220	9
V1	22	32	3	7120	1003

TOTAL REINFORCING STEEL	4427

SPIRAL REINFORCING STEEL (kg)

SP-1	2	✻✻	6	256840	511

TOTAL SPIRAL REINFORCING STEEL	511

CLASS A CONCRETE BREAKDOWN

POUR #1 (FOOTINGS)	26.5 C.M.
POUR #2 (COLUMNS)	10.9 C.M.
POUR #3 (BENT CAP)	18.0 C.M.
TOTAL CLASS A CONCRETE	55.4 C.M.
FOUNDATION EXCAVATION	LUMP SUM

✻✻ THE SP-1 SPIRAL REINFORCING STEEL SHALL BE W20 OR D-20 COLD DRAWN WIRE OR #13 PLAIN OR DEFORMED BAR.

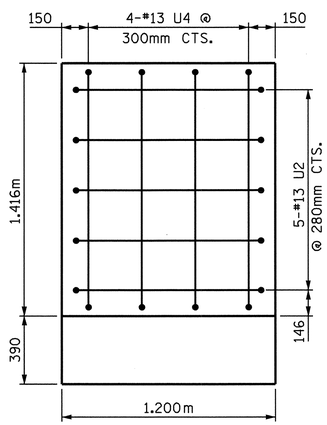

VIEW Y-Y

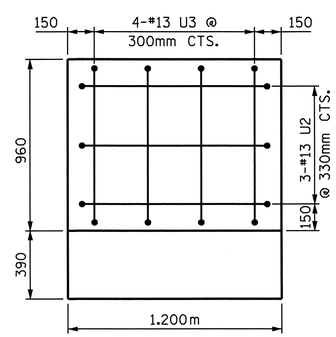

VIEW X-X

PROJECT NO. R-0609IA

GUILFORD COUNTY

STATION: 38+45.624 -L-

SHEET 2 OF 2

STATE OF NORTH CAROLINA
DEPARTMENT OF TRANSPORTATION
RALEIGH

SUBSTRUCTURE

BENT 1

REVISIONS						SHEET NO.
NO.	BY:	DATE:	NO.	BY:	DATE:	S-100
1			3			TOTAL SHEETS
2			4			321

DRAWN BY : A. K. PATEL DATE : 2/03/05
CHECKED BY : D. V. JOYNER DATE : 2/14/05

07-NOV-2006 08:33
R:\Structures\Final Plans\Str3\R0609IA_SD_BI_03.dgn
kbeard

STR. #3

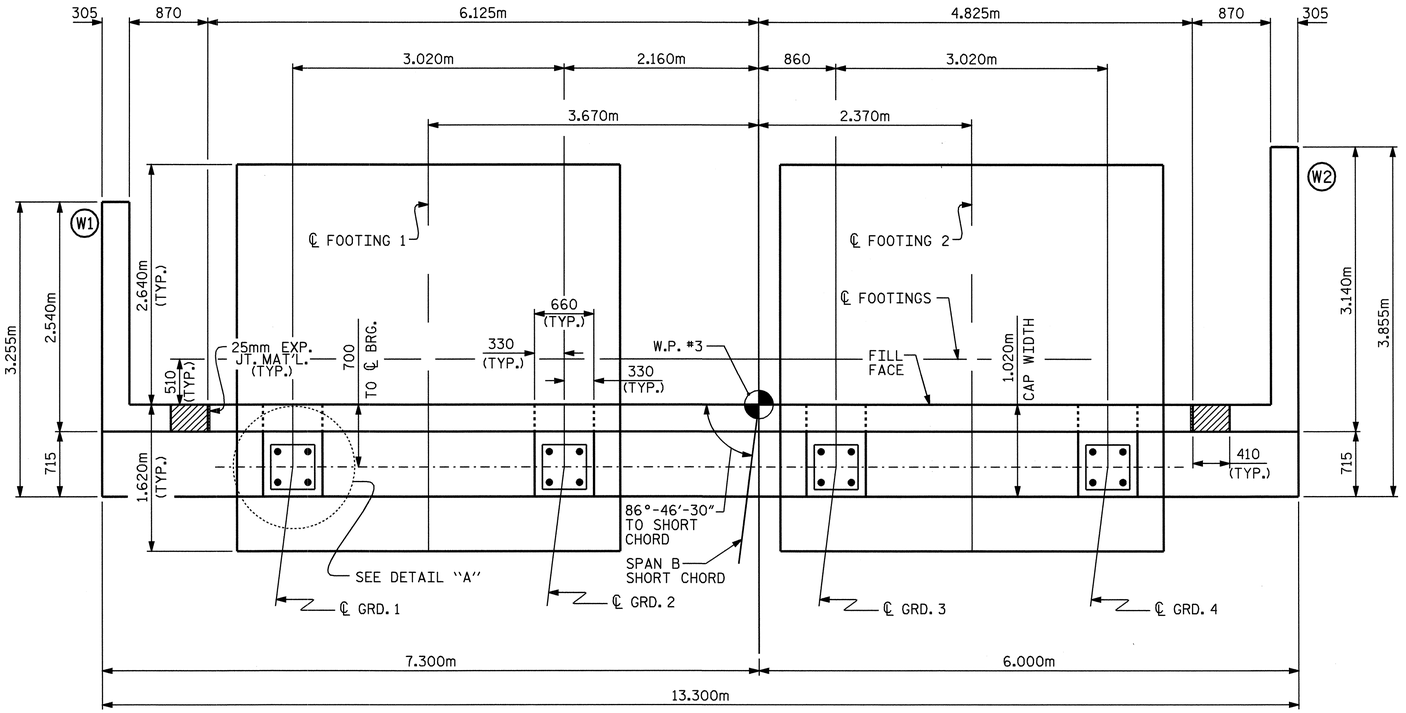

PLAN

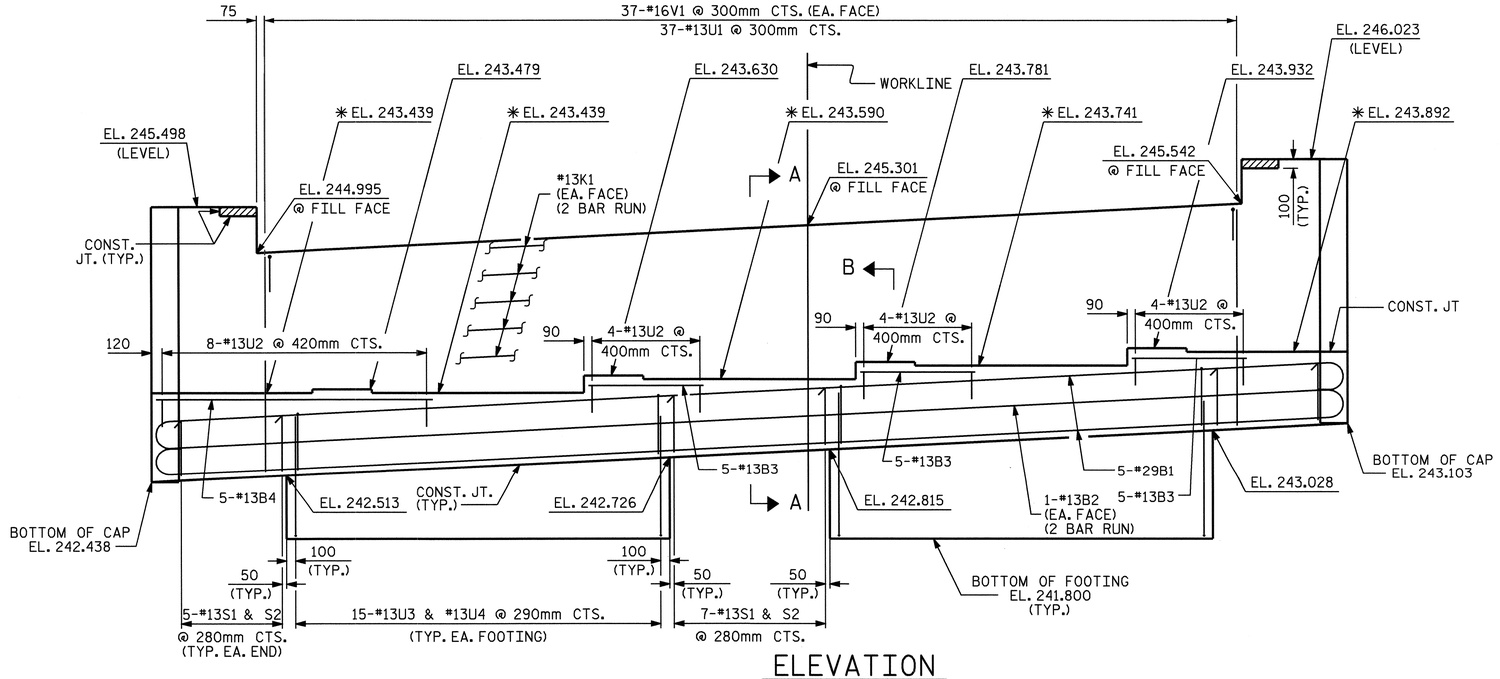

ELEVATION

✳SEE SHEET 3 OF 4 FOR LOCATION OF ELEVATION.
FOR ADDITIONAL REINFORCING STEEL FOOTINGS, SEE SHEET 3 OF 4.

NOTES

STIRRUPS IN CAP MAY BE SHIFTED AS NECESSARY TO CLEAR ANCHOR BOLTS.

FOR EPOXY PROTECTIVE COATING, SEE SPECIAL PROVISIONS.

BACKWALL SHALL BE PLACED BEFORE APPLYING THE EPOXY PROTECTIVE COATING.

THE TOP SURFACE OF THE CAP EXCEPT THE BRIDGE SEAT BUILDUPS SHALL BE SLOPED TRANSVERSELY FROM THE FILL FACE TO THE BACK FACE AT THE RATE OF 2%.

THE CONTRACTOR SHALL PROVIDE FOR INSTALLATION OF THE 102mm DIAMETER DRAIN PIPE THROUGH THE WING WALL AS REQUIRED FOR REINFORCED BRIDGE APPROACH FILLS, SEE THE ROADWAY PLANS. REINFORCING STEEL IN THE WING WALL MAY BE SHIFTED AS NECESSARY TO CLEAR THE DRAIN PIPE.

THE CONCRETE IN THE SHADED AREA OF THE WING SHALL BE POURED AFTER THE JOINT BETWEEN THE DECK AND THE APPROACH SLAB HAS BEEN SAWED AND THE PARAPET AND END POST ARE CAST IF SLIP FORMING IS USED.

THE TOP SURFACE OF THE END BENT CAP SHALL BE CURED IN ACCORDANCE WITH THE STANDARD SPECIFICATIONS EXCEPT THE MEMBRANE CURING COMPOUND METHOD SHALL NOT BE USED.

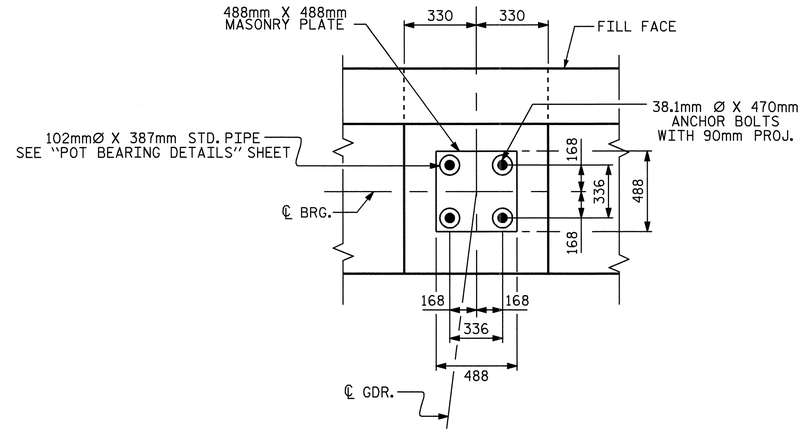

DETAIL "A"

TYPICAL EACH LOCATION

SPLICE CHART		
B2	#13	740mm
K1	#13	740mm

PROJECT NO. R-0609IA
GUILFORD COUNTY
STATION: 38+45.624 -L-

SHEET 1 OF 4

STATE OF NORTH CAROLINA
DEPARTMENT OF TRANSPORTATION
RALEIGH

SUBSTRUCTURE

END BENT #2

NORTH CAROLINA PROFESSIONAL SEAL 23371 ENGINEER NIKUL A. PATEL 5/22/06

REVISIONS						SHEET NO.
NO.	BY:	DATE:	NO.	BY:	DATE:	S-101
1			3			TOTAL SHEETS
2			4			321

STR. #3

DRAWN BY : J.P. ADAMS DATE : 3/10/05
CHECKED BY : M.K. BEARD DATE : 3/05

22-MAY-2006 08:01
T:\Structures\Final Plans\Str3\R-0609IA_sd_EBTS_03.dgn
klayne

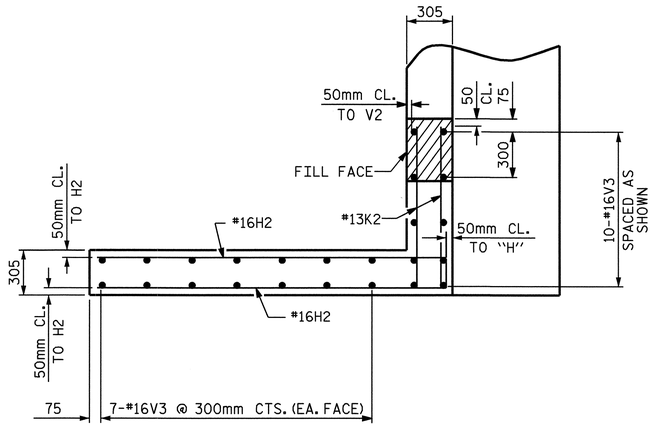

PLAN W1

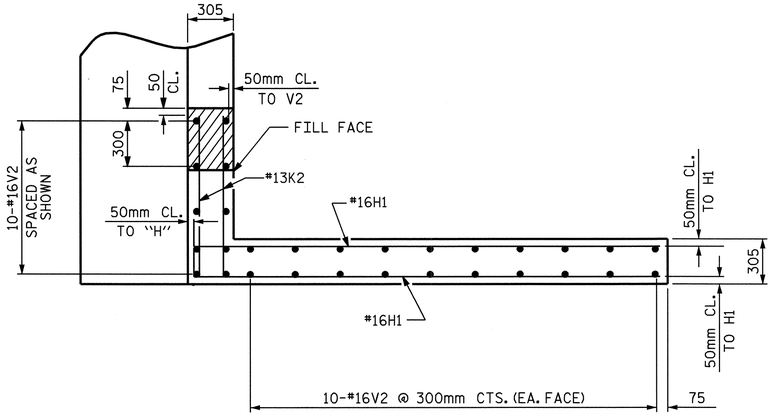

PLAN W2

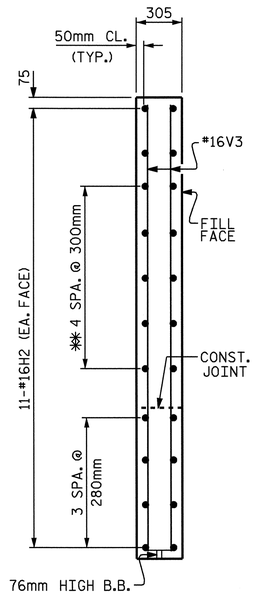

Y-Y

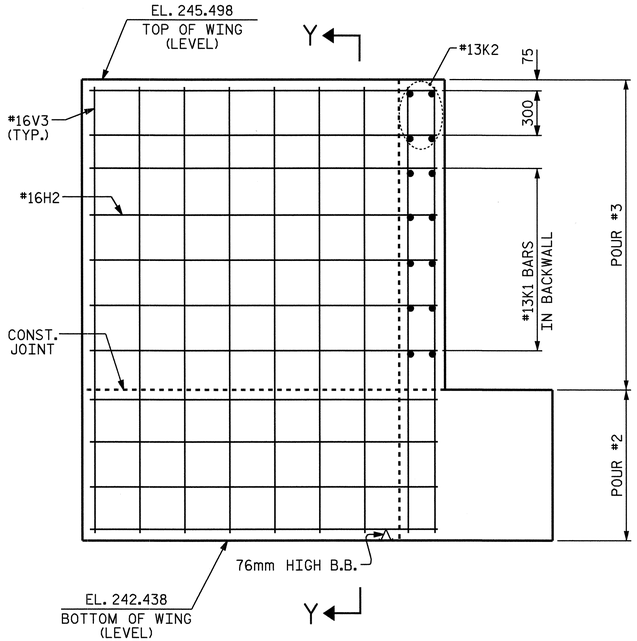

ELEVATION W1

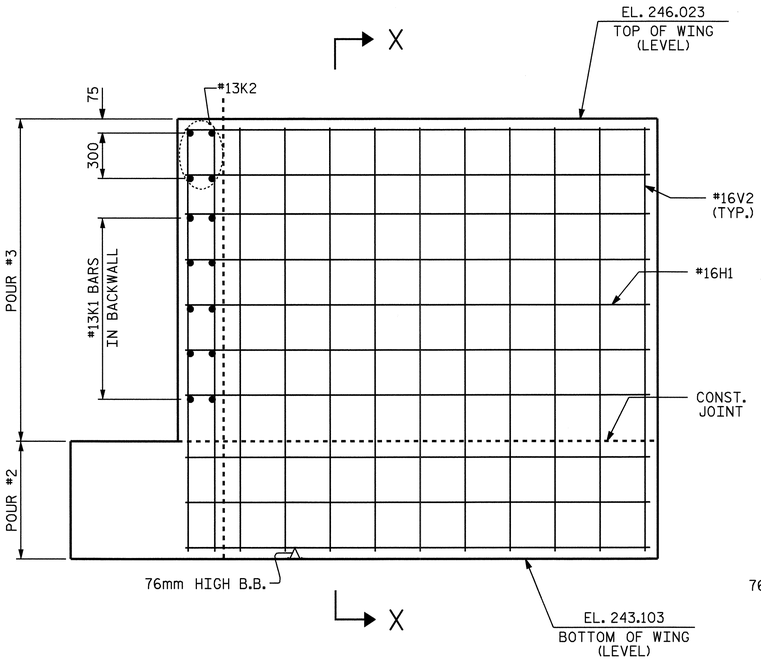

ELEVATION W2

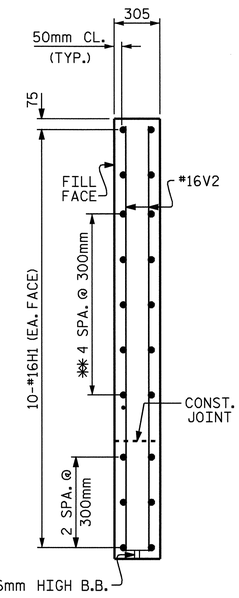

X-X

✱ THESE BARS TO MATCH K1 BARS IN BACKWALL

NORTH CAROLINA PROFESSIONAL SEAL 23371 ENGINEER VIPUL A. PATEL
5/22/06

PROJECT NO. R-0609IA
GUILFORD COUNTY
STATION: 38+45.624-L-

SHEET 2 OF 4

STATE OF NORTH CAROLINA
DEPARTMENT OF TRANSPORTATION
RALEIGH

SUBSTRUCTURE

END BENT #2

REVISIONS						SHEET NO.
NO.	BY:	DATE:	NO.	BY:	DATE:	S-102
1			3			TOTAL SHEETS
2			4			321

STR. #3

DRAWN BY : J.P. ADAMS DATE : 3/17/05
CHECKED BY : M.K. BEARD DATE : 3/05

22-MAY-2006 08:02
T:\Structures\Final Plans\Str3\R-0609IA_sd_EBTS_03.dgn
klayne

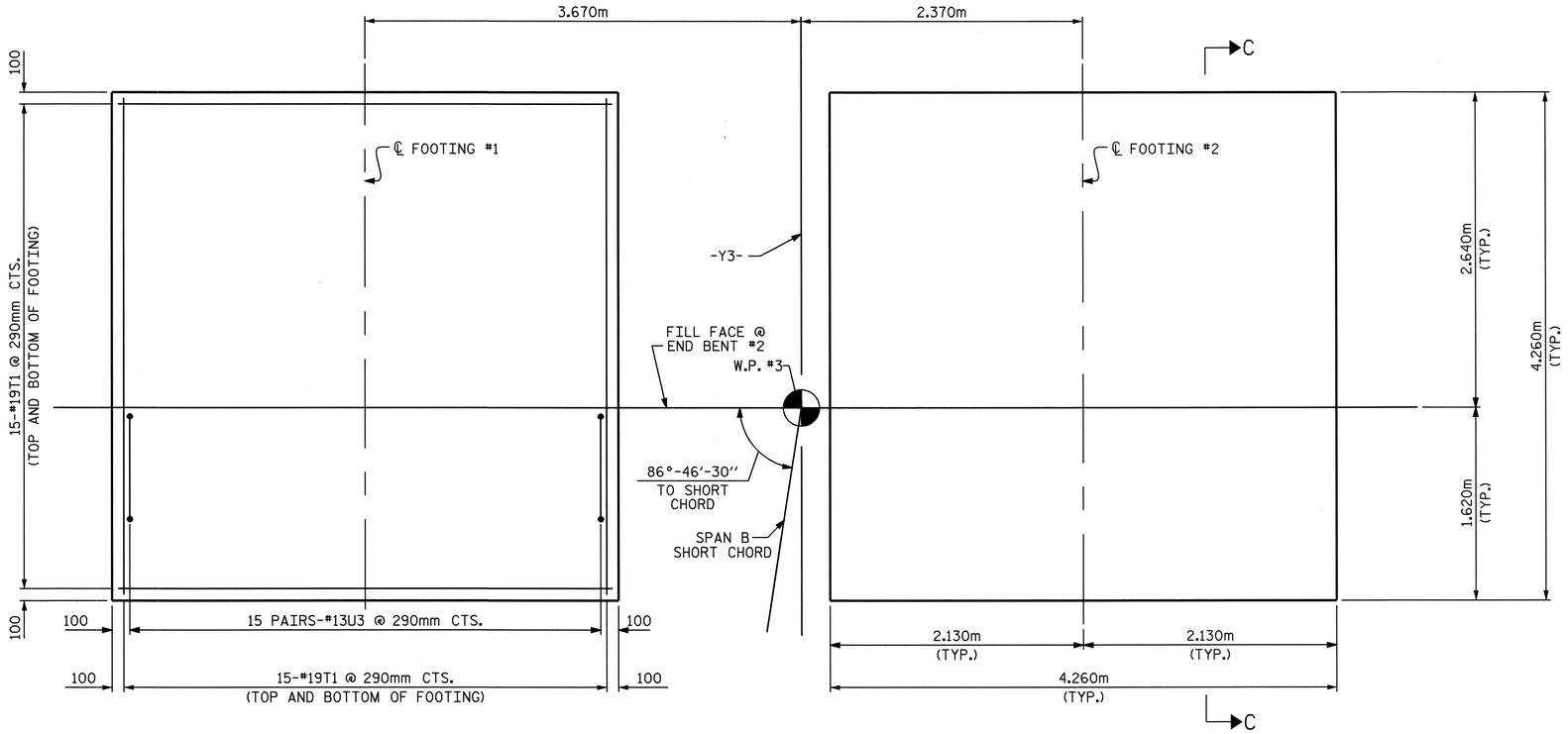

PLAN OF FOOTINGS

FOOTINGS AND REINFORCING STEEL ARE TYPICAL.

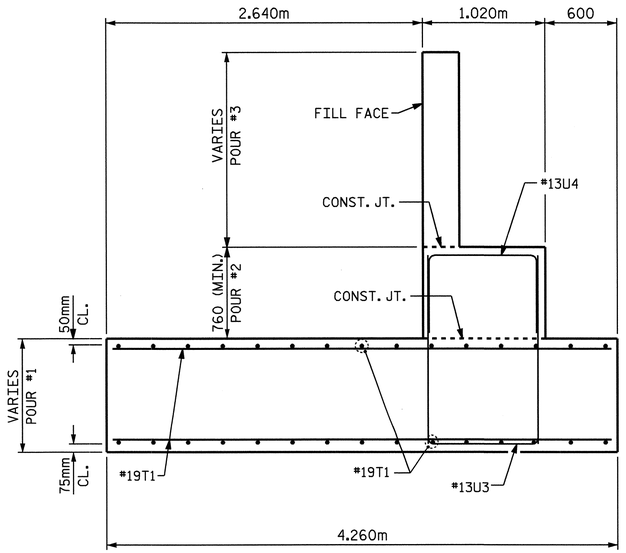

SECTION C-C

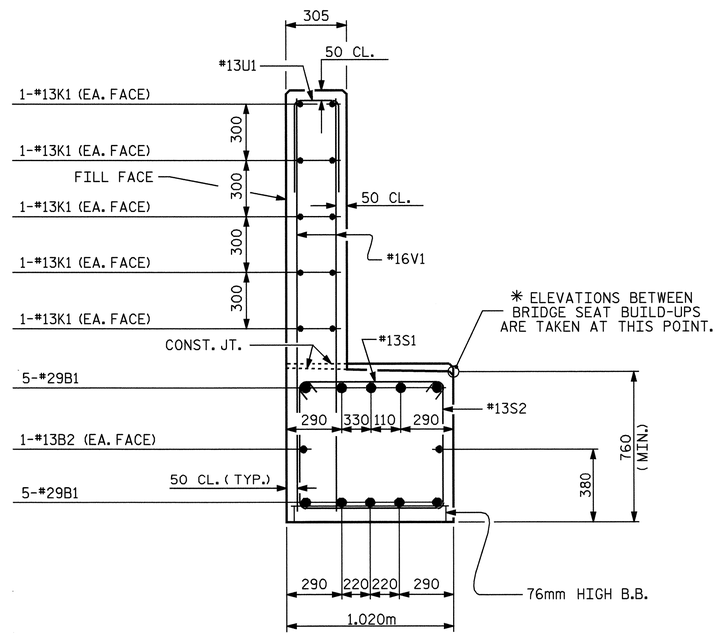

SECTION A-A

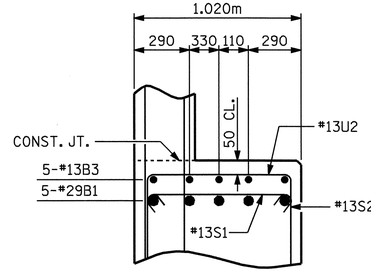

PARTIAL SECTION B

PROJECT NO. R-0609IA

GUILFORD COUNTY

STATION: 38+45.624-L-

SHEET 3 OF 4

STATE OF NORTH CAROLINA
DEPARTMENT OF TRANSPORTATION
RALEIGH

SUBSTRUCTURE

END BENT #2

REVISIONS						SHEET NO.
NO.	BY:	DATE:	NO.	BY:	DATE:	S-103
1			3			TOTAL SHEETS
2			4			321

STR. #3

NORTH CAROLINA PROFESSIONAL SEAL 23371 ENGINEER VIPUL A. PATEL
5/22/06

DRAWN BY : J.P. ADAMS DATE : 3/4/05
CHECKED BY : M.K. BEARD DATE : 3/05

22-MAY-2006 08:02
T:\Structures\Final Plans\Str3\R-0609IA_sd_EBTS_03.dgn
klayne

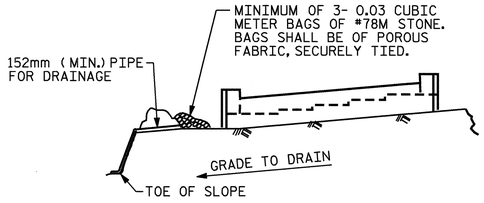

BAGGED STONE AND PIPE SHALL BE PLACED IMMEDIATELY AFTER COMPLETION OF END BENT EXCAVATION. PIPE MAY BE EITHER CONCRETE, CORRUGATED STEEL, CORRUGATED ALUMINUM ALLOY, OR CORRUGATED PLASTIC. PERFORATED PIPE WILL NOT BE ALLOWED.

BAGGED STONE SHALL REMAIN IN PLACE UNTIL THE ENGINEER DIRECTS THAT IT BE REMOVED. THE CONTRACTOR SHALL REMOVE AND DISPOSE OF SILT ACCUMULATIONS AT BAGGED STONE WHEN SO DIRECTED BY THE ENGINEER. BAGS SHALL BE REMOVED AND REPLACED WHENEVER THE ENGINEER DETERMINES THAT THEY HAVE DETERIORATED AND LOST THEIR EFFECTIVENESS.

NO SEPARATE PAYMENT WILL BE MADE FOR THIS WORK AND THE ENTIRE COST OF THIS WORK SHALL BE INCLUDED IN THE UNIT CONTRACT PRICE BID FOR THE SEVERAL PAY ITEMS.

TEMPORARY DRAINAGE AT END BENT

BAR TYPES

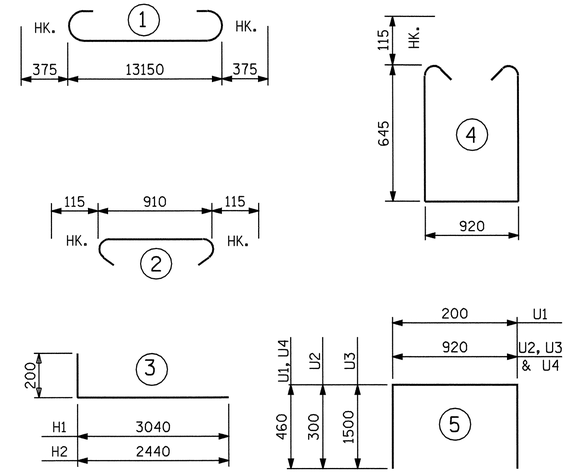

ALL BAR DIMENSIONS ARE OUT TO OUT.

BILL OF MATERIAL
END BENT #2

BAR	NO.	SIZE	TYPE	LENGTH	WEIGHT
B1	10	#29	1	13900	703
B2	4	#13	STR	7020	28
B3	15	#13	STR	1280	19
B4	5	#13	STR	3080	15
H1	20	#16	3	3240	101
H2	22	#16	3	2640	90
K1	20	#13	STR	7020	140
K2	8	#13	STR	1060	8
S1	17	#13	2	1140	19
S2	17	#13	4	2440	41
U1	37	#13	5	1120	41
U2	20	#13	5	1520	30
U3	30	#13	5	3920	117
U4	30	#13	5	1840	55
V1	74	#16	STR	2420	278
V2	30	#16	STR	2820	131
V3	24	#16	STR	2960	110
T1	120	#19	STR	4160	1116

REINFORCING STEEL = 3042 KG

CLASS A CONCRETE BREAKDOWN:

POUR #1: (FOOTINGS) 35.2 m³

POUR #2: (CAP & BOTTOM OF WINGS) 13.1 m³

POUR #3: (TOP OF WINGS & BACKWALL) 10.2 m³

CLASS A CONCRETE TOTAL 58.5 m³

FOUNDATION EXCAVATION LUMP SUM

PROJECT NO. R-0609IA

GUILFORD COUNTY

STATION: 38+45.624 -L-

SHEET 4 OF 4

NORTH CAROLINA PROFESSIONAL SEAL 23371 ENGINEER VIPUL A. PATEL
5/22/06

STATE OF NORTH CAROLINA
DEPARTMENT OF TRANSPORTATION
RALEIGH

SUBSTRUCTURE

END BENT #2

REVISIONS						SHEET NO.
NO.	BY:	DATE:	NO.	BY:	DATE:	S-104
1			3			TOTAL SHEETS
2			4			321

DRAWN BY : J.P. ADAMS DATE : 3/17/05
CHECKED BY : M.K. BEARD DATE : 3/05

22-MAY-2006 08:02
T:\Structures\Final Plans\Str3\R-0609IA_sd_EBTS_03.dgn
klayne

STR. #3

GENERAL NOTES

SLOPE PROTECTION SHALL BE PLACED UNDER THE ENDS OF THE BRIDGE AS SHOWN IN THE DETAILS. STRAIGHT EDGING WILL NOT BE REQUIRED UNLESS, IN THE OPINION OF THE ENGINEER, VISUAL INSPECTION INDICATES A NEED FOR IT. METHOD OF MEASUREMENT AND BASIS OF PAYMENT SHALL BE AS PRESCRIBED IN SECTION 462 OF THE STANDARD SPECIFICATIONS.

SLOPE PROTECTION SHALL CONSIST OF 100mm POURED-IN-PLACE CONCRETE PAVING AS SHOWN IN THE DETAILS ON THIS SHEET. CONCRETE SHALL BE CLASS "B". THE CONCRETE SURFACE SHALL BE FLOATED WITH A WOODEN FLOAT AND FINISHED. WELDED WIRE FABRIC REINFORCING SHALL BE 152 X 152 - W9.1 X W9.1, 1520mm WIDE. SLOPE PROTECTION SHALL BE POURED IN 1520mm STRIPS AS SHOWN IN THE "POURING DETAIL" WITH 600mm LONG #13 BARS PLACED ALONG THE SLOPE BETWEEN STRIPS AT 450mm MAXIMUM SPACING. SLOPE PROTECTION MAY BE POURED IN ALTERNATE 1220mm AND 1520mm STRIPS AS SHOWN IN THE "OPTIONAL POURING DETAIL" WITH ADJACENT RUNS OF WELDED WIRE FABRIC LAPPING AT LEAST 152mm. THE COST OF THE WELDED WIRE FABRIC AND #13 BARS, IF USED, SHALL BE INCLUDED IN THE CONTRACT UNIT PRICE BID PER SQUARE METER FOR SLOPE PROTECTION.

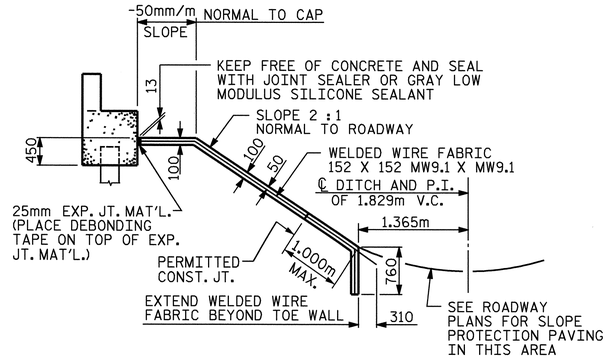

SECTION ALONG ℄ ROADWAY

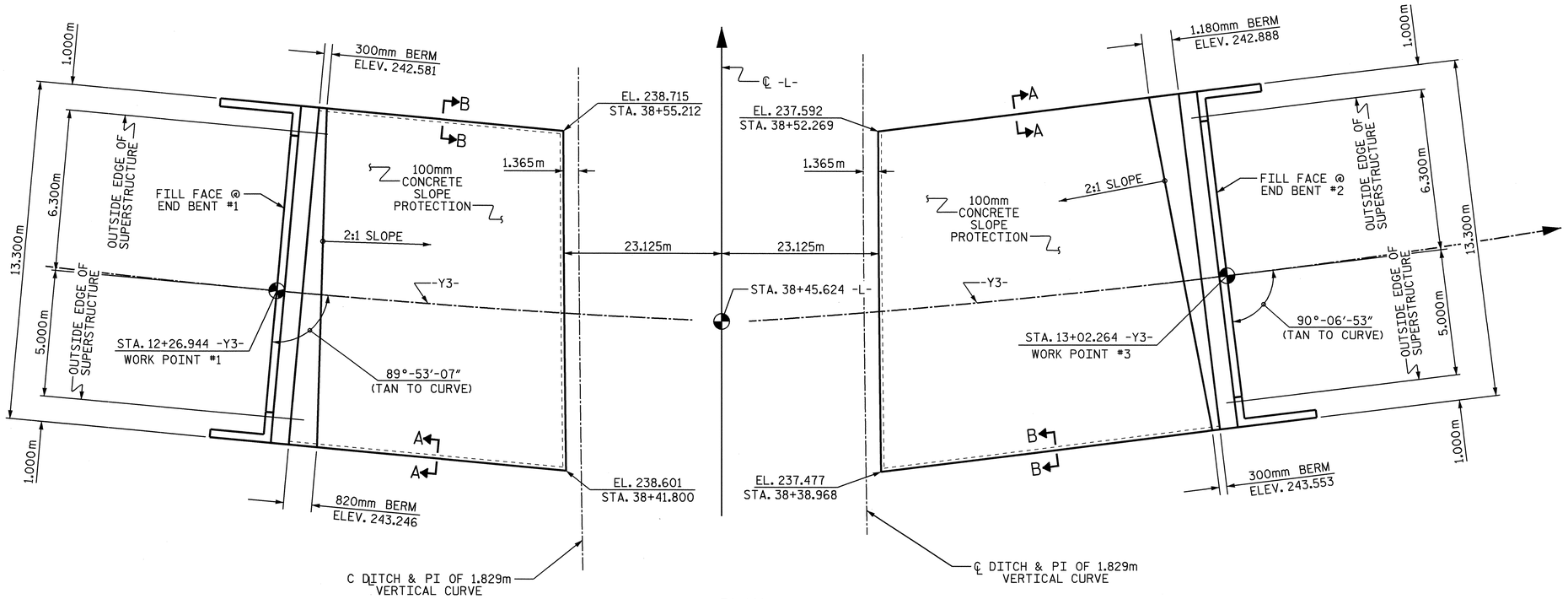

PLAN

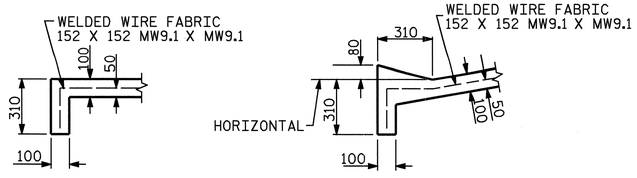

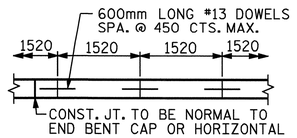

STRIP WIDTHS MAY VARY IN CURVED PORTION.

POURING DETAIL

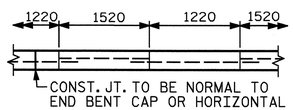

POUR A 1220mm STRIP FIRST. STRIP WIDTHS MAY VARY IN CURVED PORTION.

OPTIONAL POURING DETAIL

BRIDGE @ STA. 12+61.464 -Y3-	100mm SLOPE PROTECTION (SQUARE METERS)	* WELDED WIRE FABRIC 1520mm WIDE (APPROX. METERS)
@ END BENT 1	149	109
@ END BENT 2	196	143
TOTAL	345	252

* QUANTITY SHOWN IS BASED ON 1520mm POURS.

PROJECT NO. R-0609 IA

GUILFORD COUNTY

STATION: 38+45.624 -L-

STATE OF NORTH CAROLINA
DEPARTMENT OF TRANSPORTATION
RALEIGH

SLOPE PROTECTION DETAILS

NORTH CAROLINA PROFESSIONAL SEAL 23371 ENGINEER MIHIR A. PATEL
11/9/06

REVISIONS						SHEET NO.
NO.	BY:	DATE:	NO.	BY:	DATE:	S-105
1			3			TOTAL SHEETS
2			4			321

DRAWN BY : D.V. JOYNER DATE : 3/05
CHECKED BY : M.K. BEARD DATE : 3/05

09-NOV-2006 15:13
R:\Structures\Final Plans\Str3\R0609IA_sd_SP_03.dgn
dougjoyner

STR. #3

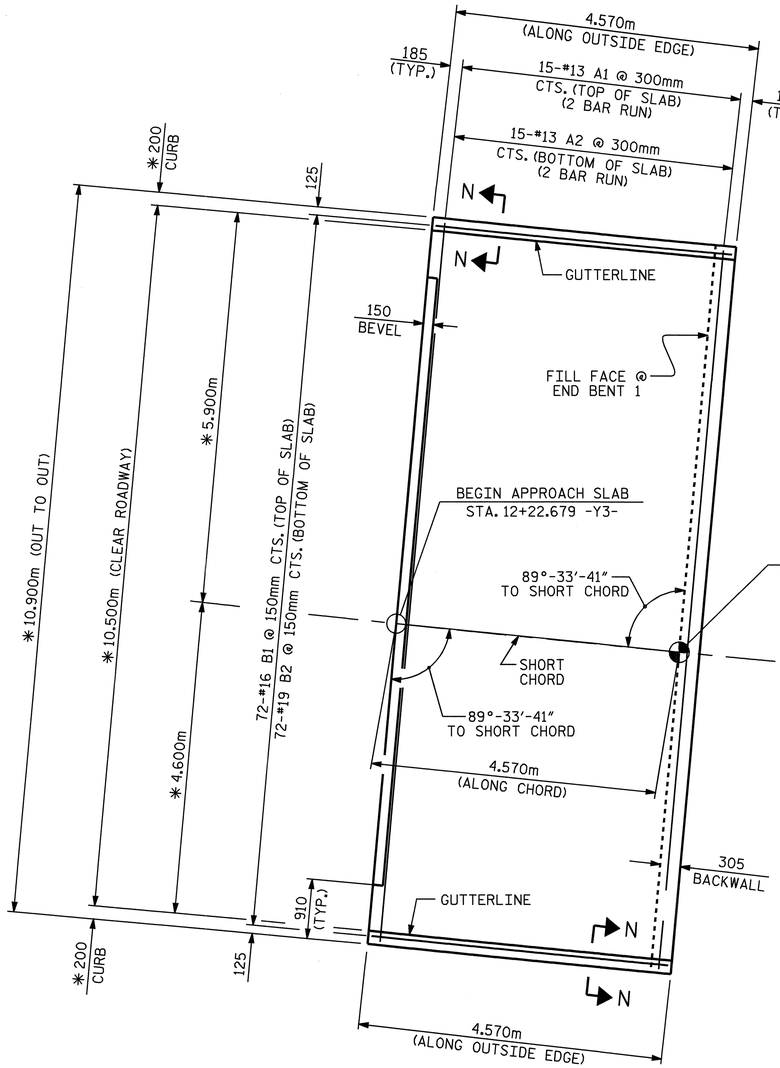

END BENT 1

SEE SHEET 2 OF 3
FOR ARC OFFSETS

* RADIAL DIMENSION THRU
THE WORKPOINT

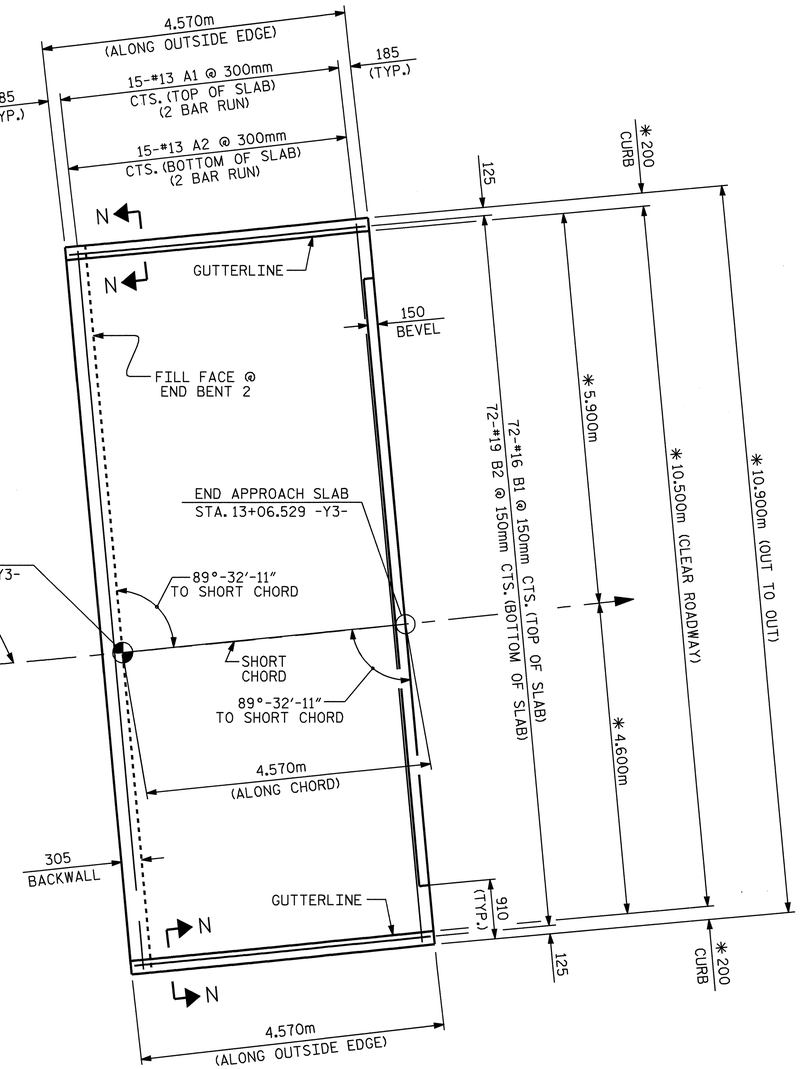

END BENT 2

PLAN

PROJECT NO. R-0609IA

GUILFORD COUNTY

STATION: 38+45.624 -L-

SHEET 1 OF 3

STATE OF NORTH CAROLINA
DEPARTMENT OF TRANSPORTATION
RALEIGH

BRIDGE APPROACH SLAB FOR FLEXIBLE PAVEMENT WITH REINFORCED BRIDGE APPROACH FILL

NORTH CAROLINA PROFESSIONAL SEAL 23371 ENGINEER AJAY A. PATEL
5/12/06

REVISIONS						SHEET NO.
NO.	BY:	DATE:	NO.	BY:	DATE:	S-106
1			3			TOTAL SHEETS
2			4			321

STR. #3

DRAWN BY : M.K. BEARD DATE : 1/19/05
CHECKED BY : A.K. PATEL DATE : 2/10/05

22-MAY-2006 08:01
T:\Structures\Final Plans\Str3\R-0609IA_sd_AS_03.dgn
klayne

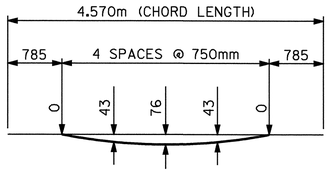

LEFT SIDE - END BENT 1 & 2

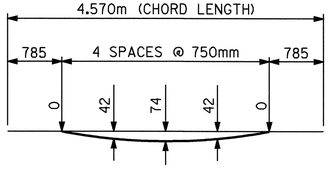

RIGHT SIDE - END BENT 1 & 2

ARC OFFSETS

NOTE: CHORD LENGTHS ARE ALONG OUTSIDE EDGE AT INTERSECTION OF BEGINNING AND ENDING OF FACE OF APPROACH SLABS.

NOTES

APPROACH SLAB SHALL NOT BE CONSTRUCTED PRIOR TO COMPLETION OF THE BRIDGE DECK.

FOR REINFORCED BRIDGE APPROACH FILL INCLUDING FABRIC, IMPERMEABLE GEOMEMBRANE, 102mm Ø DRAINAGE PIPE, #78M STONE, AND SELECT MATERIAL, SEE ROADWAY PLANS.

TEMPORARY DRAINAGE AND TEMPORARY BERM AND SLOPE DRAINS WILL BE PAID FOR UNDER THE LUMP SUM PRICE FOR BRIDGE APPROACH SLAB.

AREA BETWEEN THE WINGWALL AND APPROACH SLAB SHALL BE GRADED TO DRAIN THE WATER AWAY FROM THE FILL FACE OF THE BRIDGE AND SHALL BE PAVED. SEE ROADWAY PLANS.

THE 150mm COMP. A.B.C. SHALL EXTEND 3m BEYOND THE END OF THE APPROACH SLAB AND 300mm OUTSIDE OF EACH EDGE OF THE SLAB.

THE CONTRACTOR MAY USE 100mm TYPE B-25.0B ASPHALT CONCRETE COURSE IN LIEU OF 150mm COMP. A.B.C. IF THIS OPTION IS USED, THE BASE COURSE SHALL EXTEND 300mm BEYOND THE END OF THE APPROACH SLAB AND THE WIDTH SHALL BE THE SAME AS THAT OF THE APPROACH SLAB.

THE CONTRACTOR MAY USE 125mm CLASS "A" CONCRETE BASE IN LIEU OF 150mm COMP. A.B.C. IF THIS OPTION IS USED, THE CONCRETE BASE SHALL EXTEND 300mm BEYOND THE END OF THE APPROACH SLAB AND THE WIDTH SHALL BE THE SAME AS THAT OF THE APPROACH SLAB. THE CONCRETE SHALL BE FINISHED TO A SMOOTH SURFACE AND A LAYER OF 13.6 kg ROOFING FELT SHALL BE PLACED BETWEEN THE CONCRETE BASE AND THE APPROACH SLAB TO PREVENT BOND. THE APPROACH SLAB SHALL NOT BE CAST UNTIL THE CONCRETE BASE HAS REACHED AN AGE OF THREE CURING DAYS.

THE JOINT SHALL BE SAWED PRIOR TO THE CASTING OF THE PARAPET AND END POST.

WITH EVAZOTE JOINT SEAL

FOR EVAZOTE JOINT SEALS, SEE SPECIAL PROVISIONS.

THE NOMINAL UNCOMPRESSED SEAL WIDTH OF THE EVAZOTE JOINT SEAL SHALL BE 64mm FOR END BENT 1 & 71mm FOR END BENT 2.

FOR ELASTOMERIC CONCRETE, SEE SPECIAL PROVISIONS.

BILL OF MATERIAL FOR ONE APPROACH SLAB (2 REQ'D.)

BAR	NO.	SIZE	TYPE	LENGTH	WEIGHT
✳A1	30	#13	STR	5700	170
A2	30	#13	STR	5680	169
✳B1	72	#16	STR	4320	483
B2	72	#19	STR	4460	718
REINFORCING STEEL				kg.	887
✳EPOXY COATED REINFORCING STEEL				kg.	653
CLASS AA CONCRETE				C.M.	27.1

BILL OF MATERIAL

END BENT NO.	ELASTOMERIC CONCRETE ✳ (CU. m)
1	0.2
2	0.2

✳BASED ON THE MINIMUM BLOCKOUT SHOWN.

SPLICE LENGTH

BAR SIZE	EPOXY COATED	UNCOATED
#13	610	540

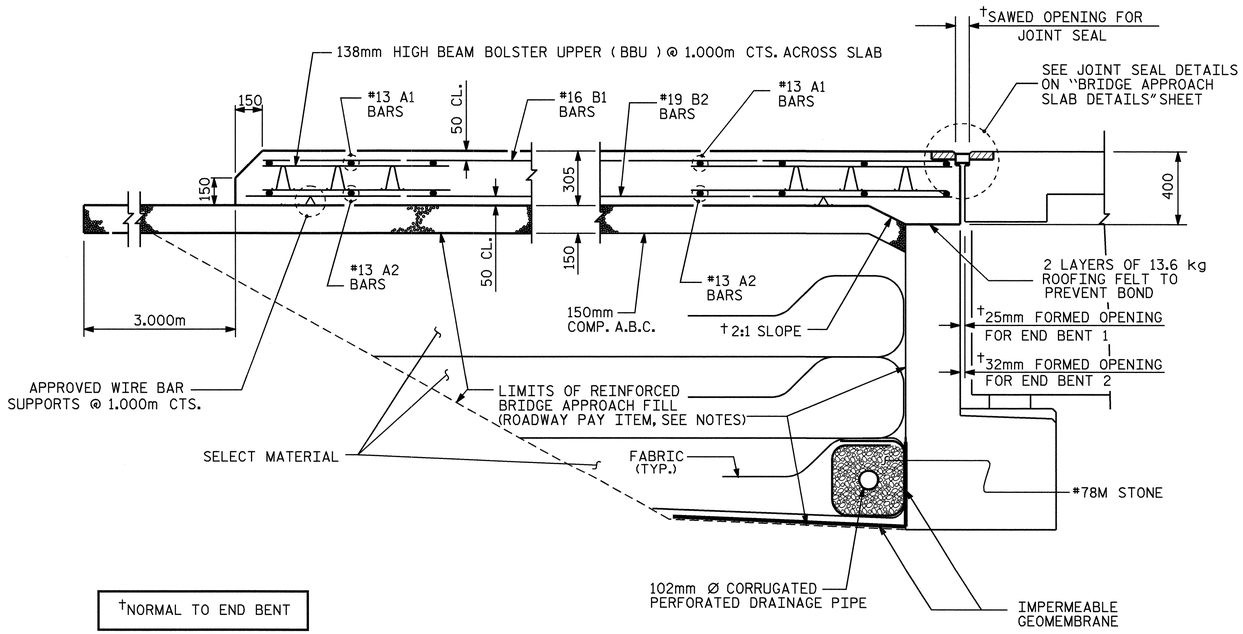

†NORMAL TO END BENT

SECTION THRU SLAB

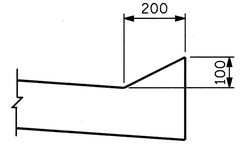

SECTION N-N

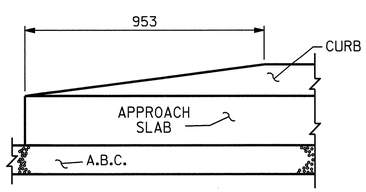

END OF CURB WITHOUT SHOULDER BERM GUTTER

CURB DETAILS

NORTH CAROLINA PROFESSIONAL SEAL 23371 ENGINEER VIPUL A. PATEL
5/22/06

PROJECT NO. R-0609IA
GUILFORD COUNTY
STATION: 38+45.624-L-

SHEET 2 OF 3

STATE OF NORTH CAROLINA
DEPARTMENT OF TRANSPORTATION
RALEIGH

STANDARD

BRIDGE APPROACH SLAB FOR FLEXIBLE PAVEMENT

REVISIONS						SHEET NO.
NO.	BY:	DATE:	NO.	BY:	DATE:	S-107
1			3			TOTAL SHEETS
2			4			321

STR. #3 STD. NO. BAS4SM

ASSEMBLED BY : M.K. BEARD	DATE : 1/20/05
CHECKED BY : A.K. PATEL	DATE : 2/10/05
DRAWN BY : FCJ 6/87	REV. 10/17/00 RWW/LES
CHECKED BY : EGA 6/87	REV. 7/10/01 RWW/LES
	REV. 5/7/03R RWW/JTE

22-MAY-2006 08:01
T:\Structures\Final Plans\Str3\R-0609IA_sd_AS_03.dgn
klayne

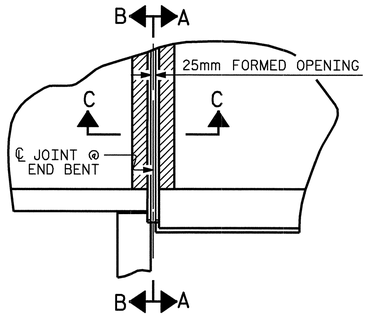

PLAN @ END BENT 1

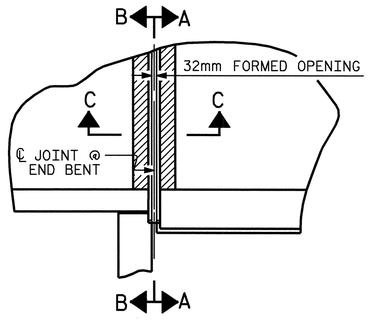

PLAN @ END BENT 2

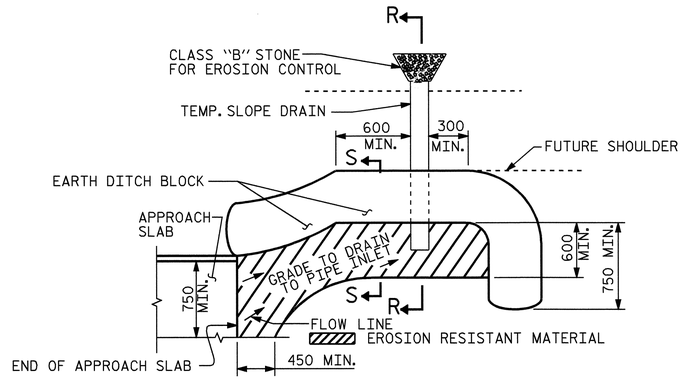

NOTE: IMMEDIATELY AFTER THE CONSTRUCTION OF THE APPROACH SLAB, THE CONTRACTOR SHALL PROVIDE TEMPORARY BERM AND SLOPE DRAIN. CONTRACTOR SHALL GRADE TO PIPE INLET AND PROVIDE EROSION RESISTANT MATERIAL AS SHOWN. THE EROSION RESISTANT MATERIAL SHALL BE EITHER 1) ASPHALT PLANT MIX, TYPE 1 OR TYPE 2, MIN. 50mm DEPTH, 2) EROSION CONTROL MAT, OR 3) CONCRETE, AS DIRECTED BY THE ENGINEER. THE SLOPE DRAIN SHALL CONSIST OF A NON-PERFORATED TEMPORARY DRAINAGE PIPE, 305mm IN DIAMETER.

PLAN VIEW

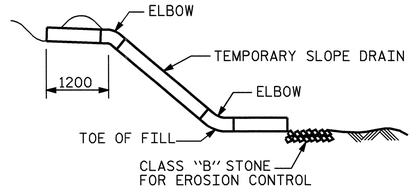

SECTION R-R

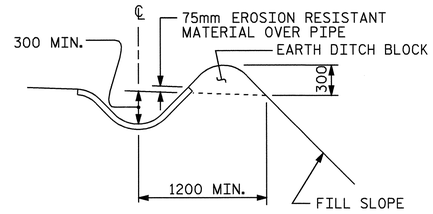

SECTION S-S

TEMPORARY BERM AND SLOPE DRAIN DETAILS

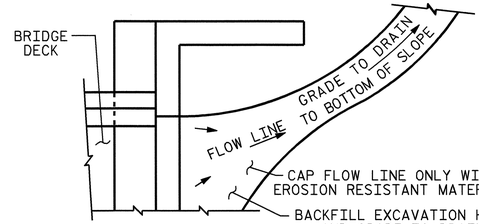

NOTE: IF THE APPROACH SLAB IS NOT CONSTRUCTED IMMEDIATELY AFTER THE BACKFILLING OF THE END BENT EXCAVATION, GRADE TO DRAIN TO THE BOTTOM OF THE SLOPE AND PROVIDE EROSION RESISTANT MATERIAL, SUCH AS FIBERGLASS ROVING OR AS DIRECTED BY THE ENGINEER TO PREVENT SOIL EROSION AND TO PROTECT THE AREA ADJACENT TO THE STRUCTURE. THE CONTRACTOR WILL BE REQUIRED TO REMOVE THESE MATERIALS PRIOR TO CONSTRUCTION OF THE APPROACH SLAB.

TEMPORARY DRAINAGE DETAIL

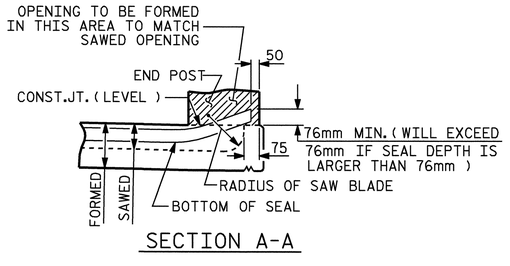

SECTION A-A

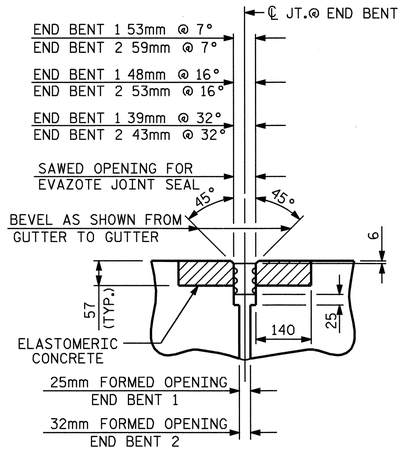

SECTION C-C
EVAZOTE JOINT SEAL

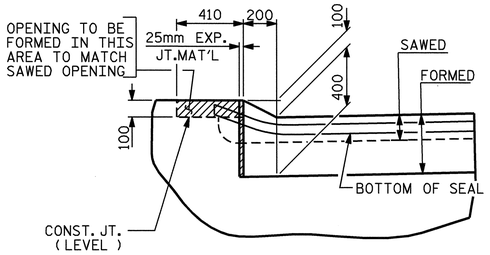

SECTION B-B

JOINT SEAL DETAILS @ END BENT

(FOR METAL RAILS WITH CURB)

PROJECT NO. R-0609IA

GUILFORD COUNTY

STATION: 38+45.624-L-

SHEET 3 OF 3

STATE OF NORTH CAROLINA
DEPARTMENT OF TRANSPORTATION
RALEIGH

STANDARD
BRIDGE APPROACH SLAB DETAILS

NORTH CAROLINA PROFESSIONAL SEAL 23371 ENGINEER VIPUL A. PATEL
5/22/06

REVISIONS						SHEET NO.
NO.	BY:	DATE:	NO.	BY:	DATE:	S-108
1			3			TOTAL SHEETS
2			4			321

ASSEMBLED BY : M.K. BEARD	DATE : 1/20/05	
CHECKED BY : A.K. PATEL	DATE : 2/10/05	
DRAWN BY : FCJ 11/88	REV. 8/16/99	RAL/LES
CHECKED BY : ARB 11/88	REV. 10/17/00	RWW/LES
	REV. 5/7/03	RWW/JTE

22-MAY-2006 08:01
T:\Structures\Final Plans\Str3\R-0609IA_sd_AS_03.dgn
klayne

STR. #3

STD. NO. BAS10SM

F.A. PROJECT: STP-NHF-119-1(15)

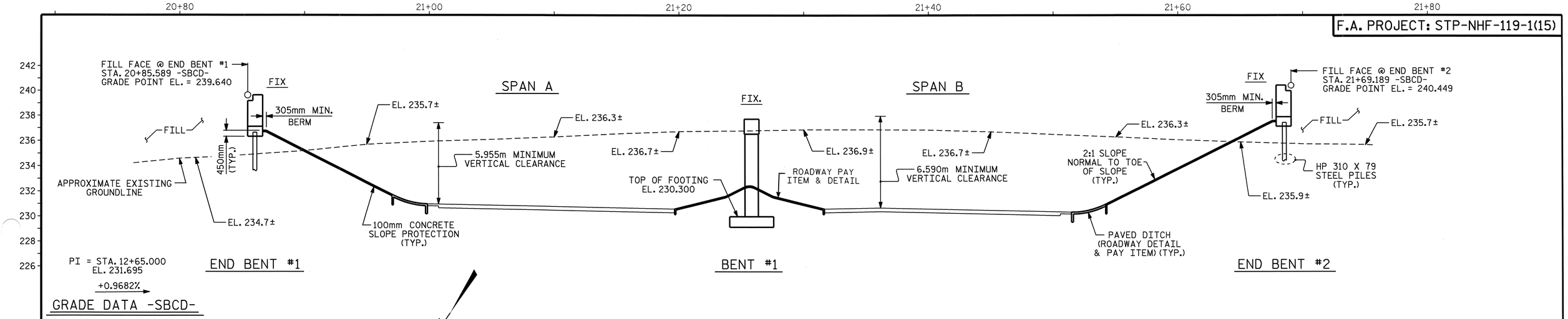

SECTION ALONG -SBCD-

(SECTIONS AT BENT AND END BENTS ARE AT RIGHT ANGLES)

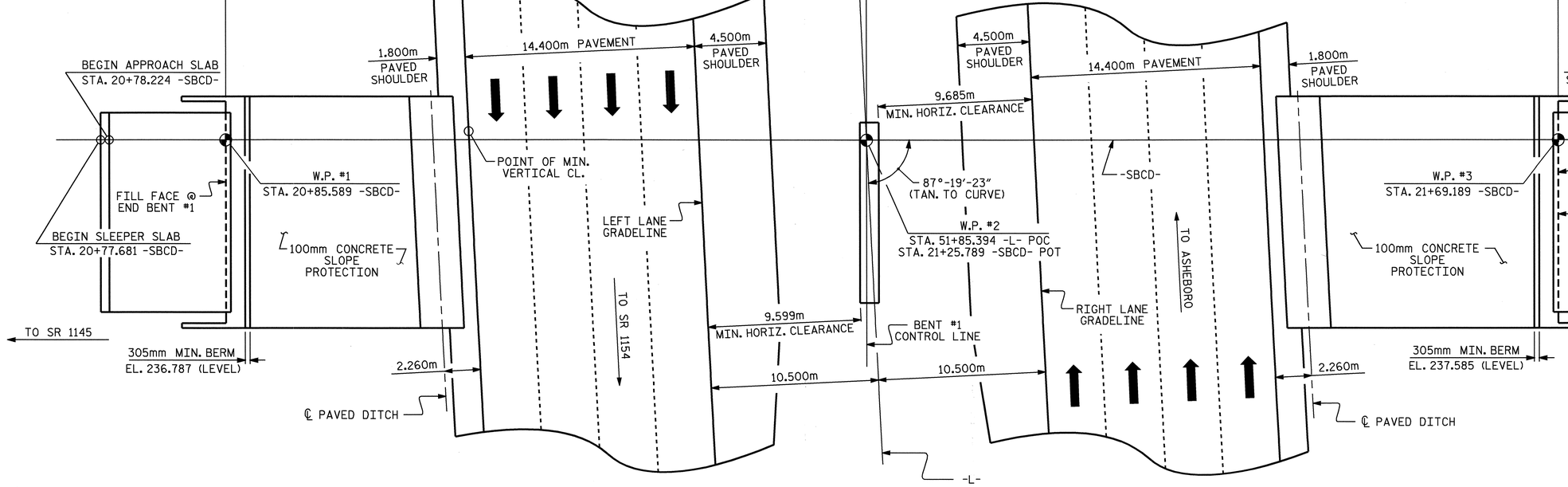

PLAN

(PILES & FOOTINGS NOT SHOWN IN PLAN VIEW FOR CLARITY)

END BENTS AND BENTS SHALL BE CONSTRUCTED AT A SKEW ANGLE OF 90° 00' 00"

HORIZONTAL CURVE DATA -L-

PI = STA. 51+30.338
Δ = 25°-41'-51.1" (RT)
L = 1565.288
T = 796.033
R = 3490.000

GRADE DATA -L-

PI = STA. 50+94.181
EL = 228.797
L = 242.000
G1 = -1.6938%
G2 = 2.7542%

PROJECT NO. R-0609IA

GUILFORD COUNTY

STATION: 51+85.394 -L- POC
21+25.789 -SBCD- POT

SHEET 1 OF 3 BRIDGE No. 973

STATE OF NORTH CAROLINA
DEPARTMENT OF TRANSPORTATION
RALEIGH

GENERAL DRAWING FOR BRIDGE ON I-85 SOUTHBOUND CD OVER US 311 BETWEEN SR 1145 AND NC 62

REVISIONS						SHEET NO.
NO.	BY:	DATE:	NO.	BY:	DATE:	S-109
1			3			TOTAL SHEETS
2			4			321

STR. #4

NORTH CAROLINA PROFESSIONAL SEAL 11915 ENGINEER JOHN C. FRYE 5-22-06

NORTH CAROLINA PROFESSIONAL SEAL 23926 ENGINEER BRIAN C. HANKS 5/22/06

DRAWN BY : B.N. GRADY/QT NGUYEN DATE : 3-04/5-05
CHECKED BY : R.W. WRIGHT DATE : 5-05

15-MAY-2006 16:01
G:\STRUCT~1\frye\FINAL_~1\Str4\R023D9~1.DGN
dely

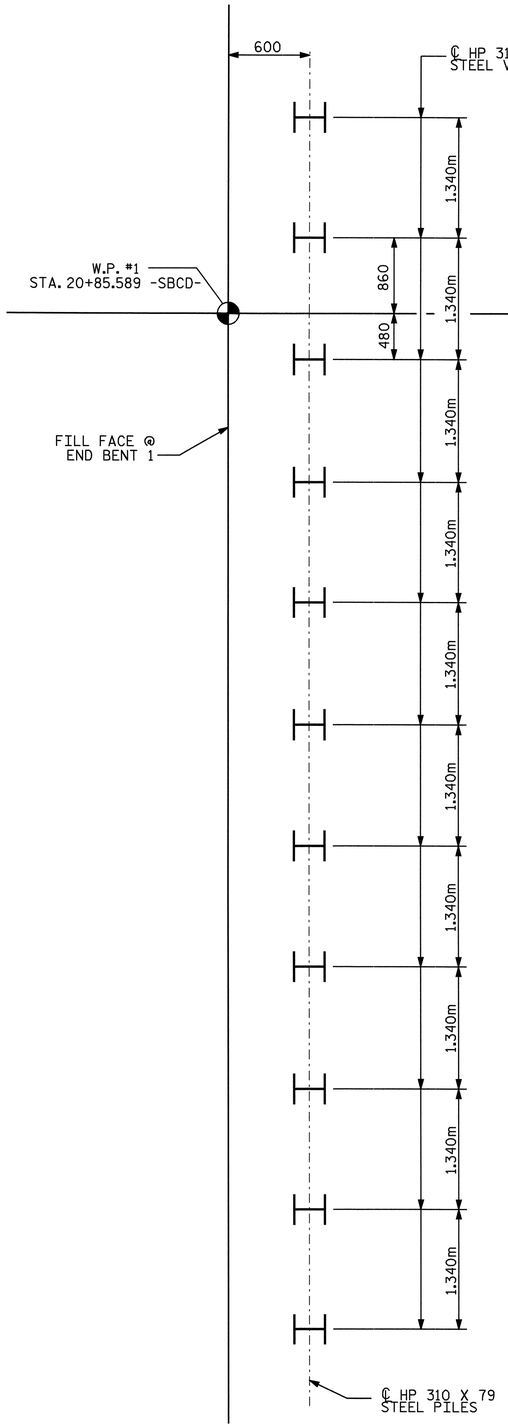

END BENT #1

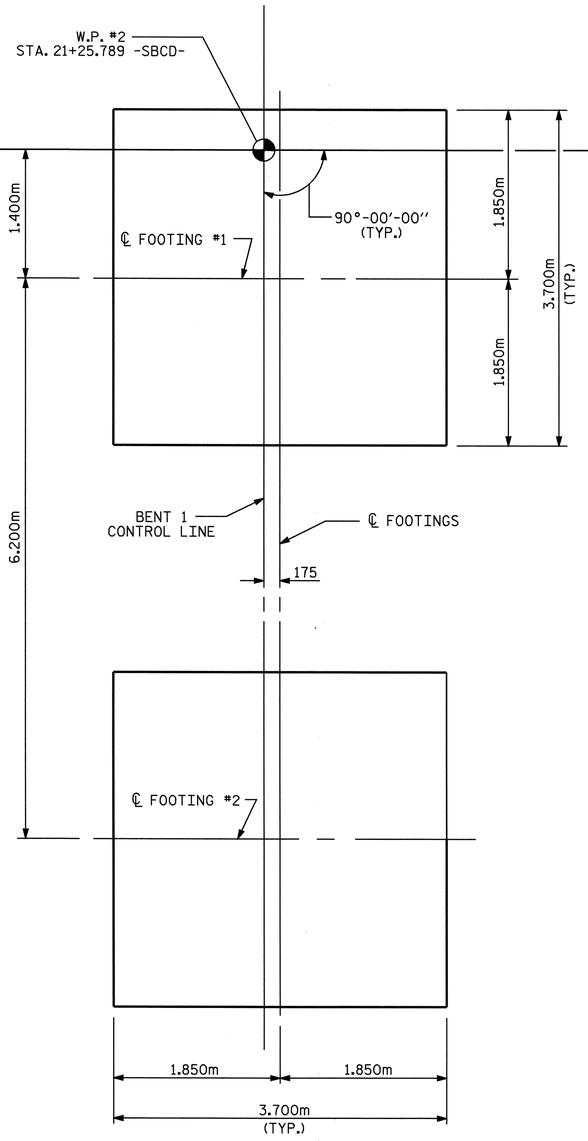

BENT #1

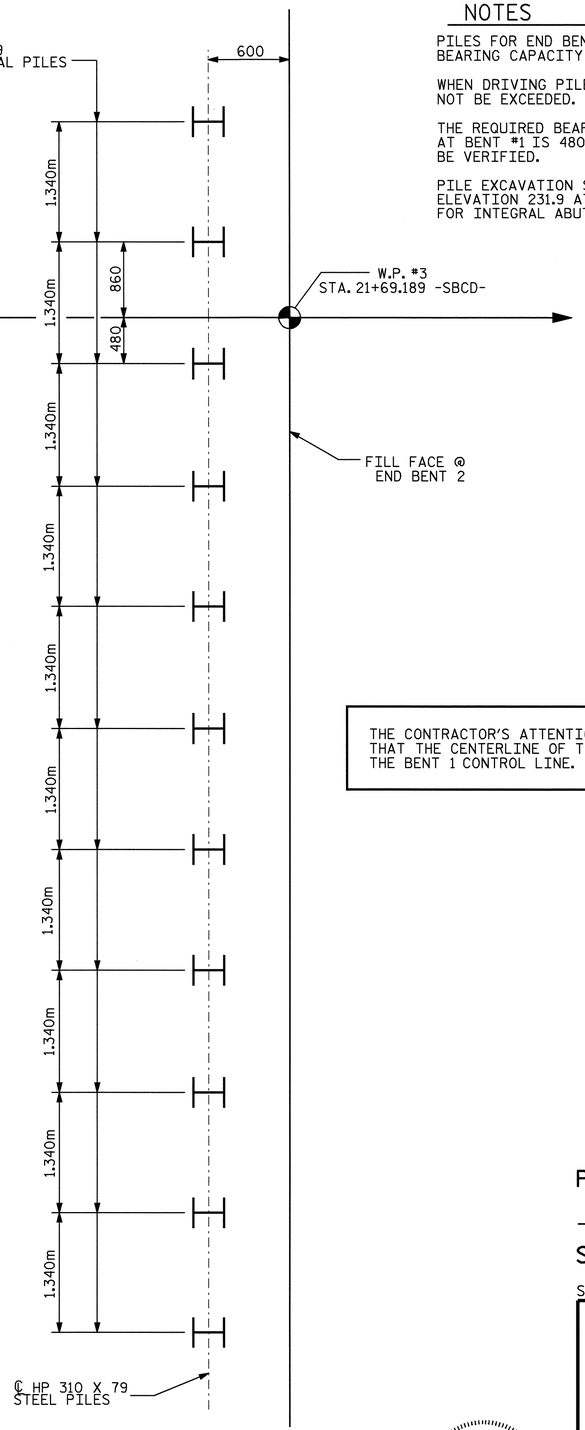

END BENT #2

FOUNDATION LAYOUT

ALL PILES ARE HP 310 X 79 STEEL PILES.
DIMENSIONS LOCATING PILES ARE SHOWN TO ℄ PILES.
DIMENSIONS LOCATING FOOTINGS ARE SHOWN TO ℄ FOOTINGS.

NOTES

PILES FOR END BENT #1 & #2 SHALL BE DRIVEN TO A MINIMUM BEARING CAPACITY OF 530 kN EACH.

WHEN DRIVING PILES, THE MAXIMUM BLOW COUNT SHALL NOT BE EXCEEDED.

THE REQUIRED BEARING CAPACITY OF THE SPREAD FOOTINGS AT BENT #1 IS 480kPA. THE REQUIRED BEARING CAPACITY SHALL BE VERIFIED.

PILE EXCAVATION SHALL BE UTILIZED TO INSTALL PILES TO ELEVATION 231.9 AT END BENT #2. SEE "PILE EXCAVATION FOR INTEGRAL ABUTMENT" SPECIAL PROVISION.

THE CONTRACTOR'S ATTENTION IS CALLED TO THE FACT THAT THE CENTERLINE OF THE FOOTINGS IS OFFSET FROM THE BENT 1 CONTROL LINE.

DRAWN BY : QT NGUYEN DATE : 5-05
CHECKED BY : R.W. WRIGHT DATE : 5-05

15-MAY-2006 16:01
G:\STRUCT~1\frye\FINAL_~1\Str4\R023D9~1.DGN
dely

NORTH CAROLINA PROFESSIONAL SEAL 23926 ENGINEER BRIAN C. HAWKS
5/22/06

PROJECT NO. R-0609IA
GUILFORD COUNTY
STATION: 51+85.394 -L-

SHEET 2 OF 3

STATE OF NORTH CAROLINA
DEPARTMENT OF TRANSPORTATION
RALEIGH

GENERAL DRAWING FOR BRIDGE ON I-85 SOUTHBOUND CD OVER US 311 BETWEEN SR 1145 AND NC 62

REVISIONS						SHEET NO.
NO.	BY:	DATE:	NO.	BY:	DATE:	S-110
1			3			TOTAL SHEETS
2			4			321

STR. #4

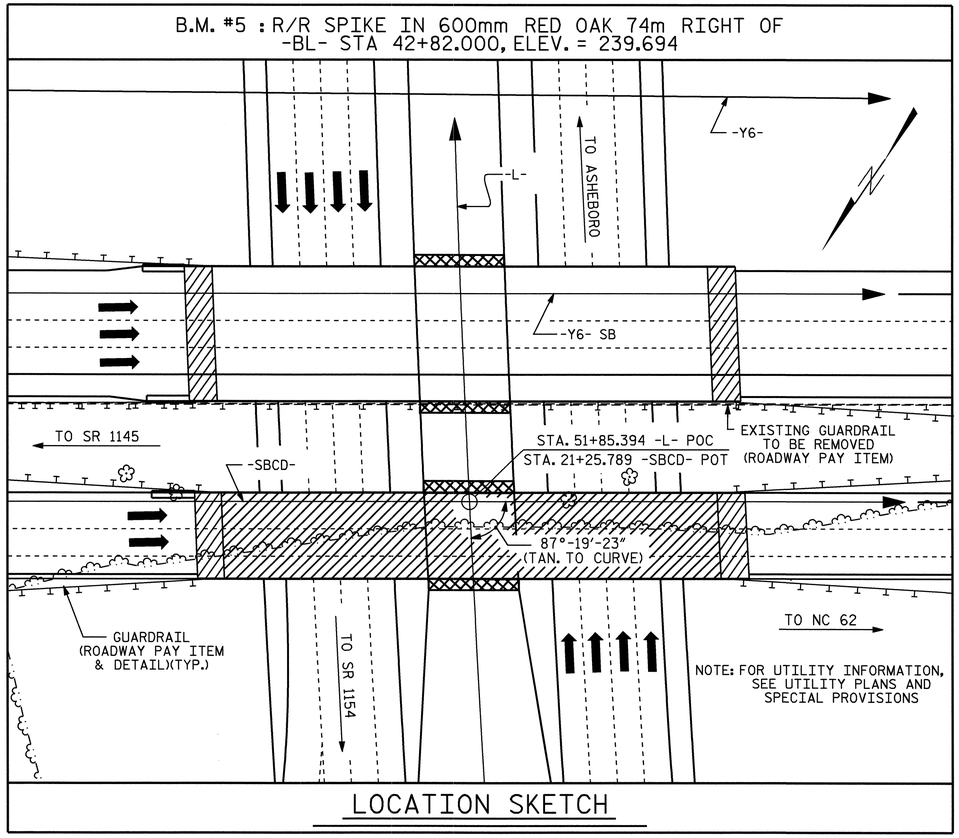

LOCATION SKETCH

NOTES

ALL DIMENSIONS ARE IN MILLIMETERS UNLESS OTHERWISE NOTED.

ALL ELEVATIONS ARE IN METERS.

ASSUMED LIVE LOAD = MS 18 OR ALTERNATE LOADING.

FOR OTHER DESIGN DATA AND GENERAL NOTES, SEE SHEET SNSM.

THIS BRIDGE HAS BEEN DESIGNED BY THE STRENGTH DESIGN METHOD AS SPECIFIED IN AASHTO STANDARD SPECIFICATIONS.

ALL STRUCTURAL STEEL SHALL BE AASHTO M270 GRADE 345W AND PAINTED IN ACCORDANCE WITH SYSTEM 4 OF ARTICLE 442-7 OF THE STANDARD SPECIFICATIONS UNLESS OTHERWISE NOTED ON THE PLANS.

THIS BRIDGE HAS BEEN DESIGNED IN ACCORDANCE WITH THE REQUIREMENTS OF THE AASHTO STANDARD SPECIFICATIONS FOR SEISMIC DESIGN OF HIGHWAY BRIDGES FOR SEISMIC PERFORMANCE CATEGORY A.

THE CONTRACTOR SHALL PROVIDE INDEPENDENT ASSURANCE SAMPLES OF REINFORCING STEEL AS FOLLOWS: FOR PROJECTS REQUIRING UP TO 360,000 kg OF REINFORCING STEEL, ONE 760mm SAMPLE OF EACH SIZE BAR USED, AND FOR PROJECTS REQUIRING OVER 360,000 kg OF REINFORCING STEEL, TWO 760mm SAMPLES OF EACH SIZE BAR USED. THE BARS FROM WHICH THE SAMPLES ARE TAKEN MUST THEN BE SPLICED WITH REPLACEMENT BARS OF THE SIZE AND LENGTH OF THE SAMPLE PLUS A MINIMUM LAP SPLICE OF THIRTY BAR DIAMETERS.

FOR FALSEWORK AND FORMWORK, SEE SPECIAL PROVISIONS.

FOR EROSION CONTROL, MEASURES SEE EROSION CONTROL PLANS.

REMOVABLE FORMS MAY BE USED IN LIEU OF METAL STAY-IN-PLACE FORMS IN ACCORDANCE WITH ARTICLE 420-3 OF THE STANDARD SPECIFICATIONS.

THE CLASS AA CONCRETE IN THE BRIDGE DECK SHALL CONTAIN FLY ASH OR GROUND GRANULATED BLAST FURNACE SLAG AT THE SUBSTITUTION RATE SPECIFIED IN ARTICLE 1024-1 AND IN ACCORDANCE WITH ARTICLES 1024-5 AND 1024-6 OF THE STANDARD SPECIFICATIONS. NO PAYMENT WILL BE MADE FOR THIS SUBSTITUTION AS IT IS CONSIDERED INCIDENTAL TO THE COST OF THE REINFORCED CONCRETE DECK SLAB.

NEEDLE BEAMS WILL NOT BE ALLOWED UNLESS OTHERWISE CALLED FOR ON THE PLANS OR APPROVED BY THE ENGINEER.

FOR SUBMITTAL OF WORKING DRAWINGS, SEE SPECIAL PROVISIONS.

FOR METRIC STRUCTURAL STEEL, SEE SPECIAL PROVISIONS.

FOR CRANE SAFETY, SEE SPECIAL PROVISIONS.

WORK SHALL NOT BE STARTED ON THIS BRIDGE UNTIL ROADWAY SECTION HAS BEEN EXCAVATED.

FOR STEEL H PILES, SEE SPECIAL PROVISIONS.

TOTAL BILL OF MATERIAL

	FOUNDATION EXCAVATION	PILE EXCAVATION IN SOIL	PILE EXCAVATION NOT IN SOIL	REINFORCED CONCRETE DECK SLAB	GROOVING BRIDGE FLOORS	CLASS A CONCRETE	BRIDGE APPROACH SLABS	REINFORCING STEEL	SPIRAL COLUMN REINFORCING STEEL	STRUCTURAL STEEL	HP 310 X 79 STEEL PILES		CONCRETE BARRIER RAIL	100mm SLOPE PROTECTION	POT BEARINGS	ELASTOMERIC BEARINGS	EVAZOTE JOINT SEALS
	LUMP SUM	METERS	METERS	SQ. METERS	SQ. METERS	CU. METERS	LUMP SUM	kg	kg	APPROX. kg	NO.	METERS	METERS	SQ. METERS	LUMP SUM	LUMP SUM	LUMP SUM
SUPERSTRUCTURE				1035.8	1031.0		LUMP SUM			184,380			166.180		LUMP SUM	LUMP SUM	LUMP SUM
END BENT 1						20.0		2000			11	71.5		185			
BENT 1	LUMP SUM					55.7		5799	453								
END BENT 2		49.8	8.5			20.0		2001			11	58.3		235			
TOTAL	LUMP SUM	49.8	8.5	1035.8	1031.0	95.7	LUMP SUM	9800	453	184,380	22	129.8	166.180	420	LUMP SUM	LUMP SUM	LUMP SUM

PROJECT NO. R-0609IA

GUILFORD COUNTY

STATION: 51+85.394 -L-

SHEET 3 OF 3

STATE OF NORTH CAROLINA
DEPARTMENT OF TRANSPORTATION
RALEIGH

GENERAL DRAWING FOR BRIDGE ON I-85 SOUTHBOUND CD OVER US 311 BETWEEN SR 1145 AND NC 62

NORTH CAROLINA PROFESSIONAL SEAL 23926 ENGINEER BRIAN C. HANKS
5/22/06

REVISIONS						SHEET NO.
NO.	BY:	DATE:	NO.	BY:	DATE:	S-111
1			3			TOTAL SHEETS
2			4			321

STR. #4

DRAWN BY : B.N. GRADY/QT NGUYEN DATE : 3-04/5-05
CHECKED BY : R.W. WRIGHT DATE : 5-05

15-MAY-2006 16:01
G:\STRUCT~1\frye\FINAL_~1\Str4\R023D9~1.DGN
dely

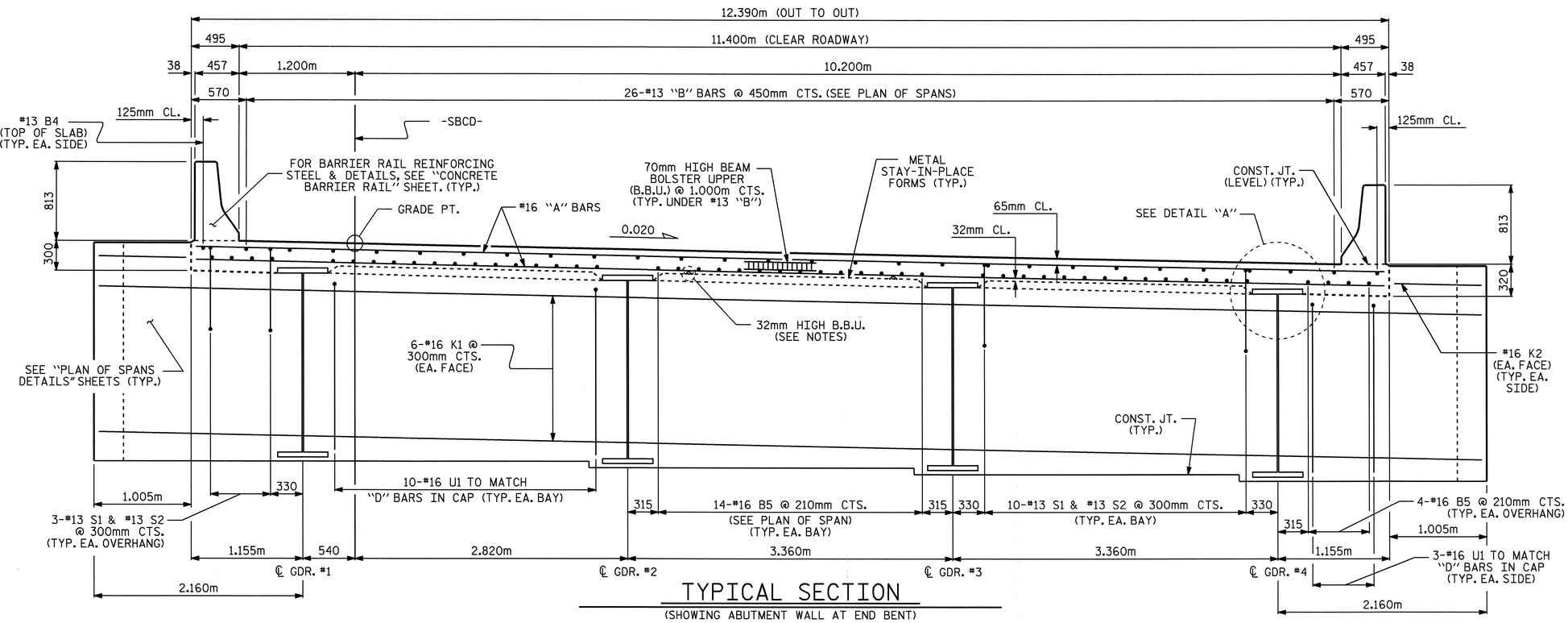

TYPICAL SECTION

(SHOWING ABUTMENT WALL AT END BENT)

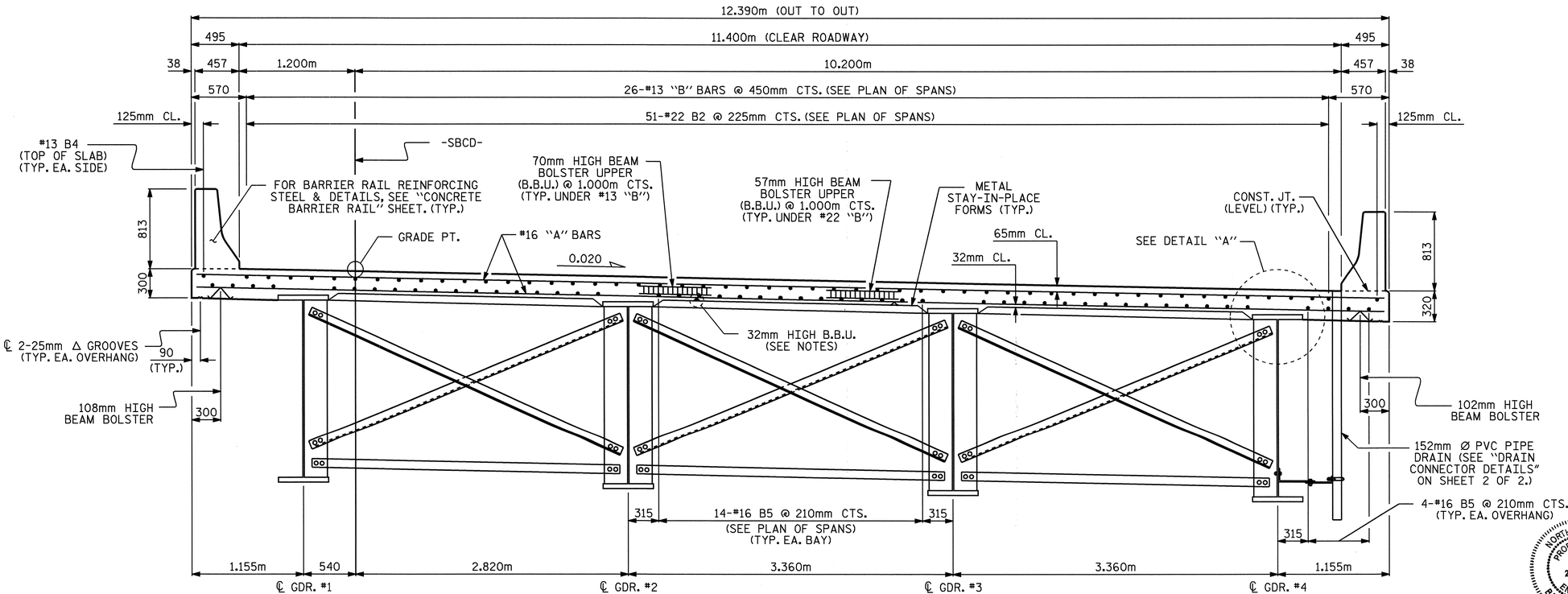

TYPICAL SECTION

(SHOWING BENT & INTERMEDIATE DIAPHRAGMS)

NOTES

PROVIDE 32mm HIGH BEAM BOLSTERS UPPER AT 1.2m CTS. ATOP THE METAL STAY-IN-PLACE FORMS TO SUPPORT THE BOTTOM MAT OF "A" BARS. WHEN USING REMOVABLE FORMS, PROVIDE CONTINUOUS HIGH CHAIRS FOR METAL DECK (C.H.C.M.) @ 1.2m CTS. WITH A HEIGHT TO SUPPORT THE BOTTOM MAT OF "A" BARS A CLEAR DISTANCE OF 65mm ABOVE THE TOP OF THE REMOVABLE FORM.

METAL STAY-IN-PLACE FORMS SHALL NOT BE WELDED TO BEAM OR GIRDER FLANGES IN THE ZONES REQUIRING CHARPY V-NOTCH TEST. SEE STRUCTURAL STEEL DETAIL SHEETS.

PREVIOUSLY CAST CONCRETE IN A CONTINUOUS UNIT SHALL HAVE ATTAINED A MINIMUM COMPRESSIVE STRENGTH OF 20.7 MPa BEFORE ADDITIONAL CONCRETE IS CAST IN THE UNIT.

BARRIER RAIL IN A CONTINUOUS UNIT SHALL NOT BE CAST UNTIL ALL SLAB CONCRETE IN THE UNIT HAS BEEN CAST AND HAS REACHED A MINIMUM COMPRESSIVE STRENGTH OF 20.7 MPa.

STRUCTURAL STEEL ERECTION IN A CONTINUOUS UNIT SHALL BE COMPLETE BEFORE FALSEWORK OR FORMS ARE PLACED ON THE UNIT.

THE CONTRACTOR MAY, WHEN NECESSARY, PROPOSE A SCHEME FOR AVOIDING INTERFERENCE BETWEEN METAL STAY-IN-PLACE FORM SUPPORTS OR FORMS AND BEAM/GIRDER STIFFENERS OR CONNECTOR PLATES. THE PROPOSAL SHALL BE INDICATED, AS APPROPRIATE, ON EITHER THE STEEL WORKING DRAWINGS OR THE METAL STAY-IN-PLACE FORM WORKING DRAWINGS.

REMOVABLE FORMS MAY BE USED IN LIEU OF METAL STAY-IN-PLACE FORMS IN ACCORDANCE WITH ARTICLE 420-3 OF THE STANDARD SPECIFICATIONS.

FOR WING ELEVATIONS AND DETAILS, SEE "PLAN OF SPANS DETAILS" SHEETS.

THE CONTRACTOR SHALL ADJUST THE GIRDER BUILDUPS AS NECESSARY TO INCORPORATE A MAXIMUM PERMISSIBLE VARIATION IN POT BEARING DEPTH OF 13mm, SEE SPECIAL PROVISION FOR POT BEARINGS.

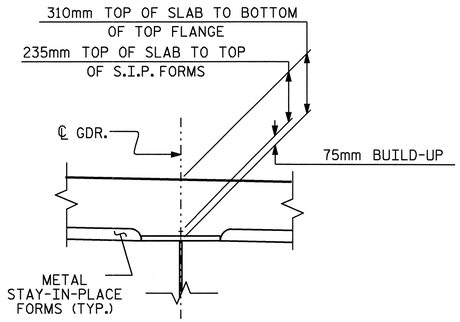

DETAIL "A"

PROJECT NO. R-0609IA

GUILFORD COUNTY

STATION: 51+85.394 -L-

SHEET 1 OF 2

STATE OF NORTH CAROLINA
DEPARTMENT OF TRANSPORTATION
RALEIGH

SUPERSTRUCTURE

TYPICAL SECTION

(SOUTHBOUND COLLECTOR)

REVISIONS						SHEET NO.
NO.	BY:	DATE:	NO.	BY:	DATE:	S-112
1			3			TOTAL SHEETS
2			4			321

NORTH CAROLINA PROFESSIONAL SEAL 23926 ENGINEER BRIAN C. HANKS 5/22/06

DRAWN BY : D. G. ELY DATE : 3/8/05
CHECKED BY : A. B. NAIK DATE : 4/27/05

15-MAY-2006 16:00
G:\STRUCT~1\frye\FINAL_~1\Str4\ROCD7F~1.DGN
dely

STR. #4

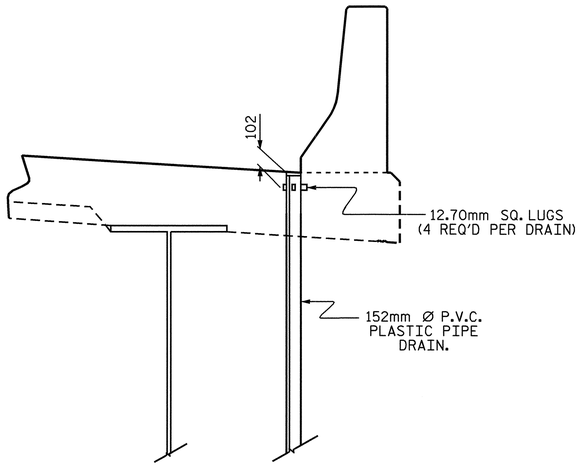

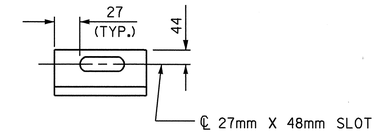

SECTION B-B

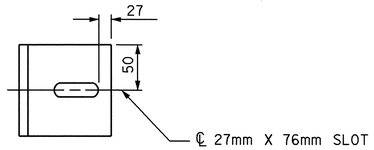

SECTION A-A

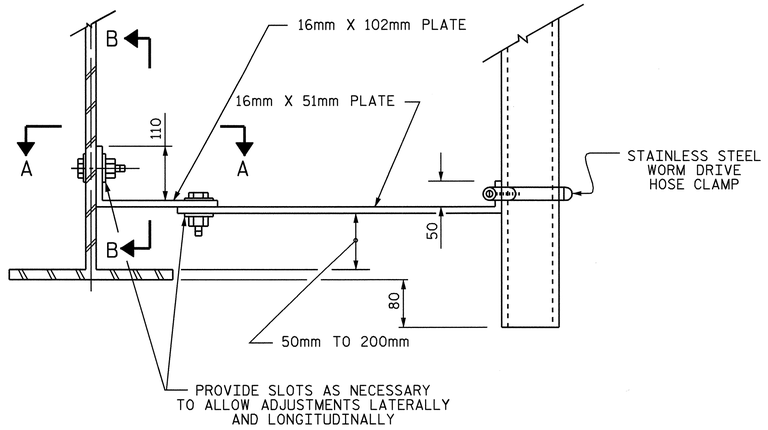

NOTES

BOLT SIZE FOR PIPE DRAIN BRACKETS TO BE SAME AS DIAPHRAGMS AND CROSSFRAME CONNECTIONS. STAINLESS STEEL WORM DRIVE HOSE CLAMP SHALL BE COMMERCIAL QUALITY.

PLATES FOR PIPE DRAIN BRACKETS SHALL CONFORM TO AASHTO M270 GRADE 250 STEEL OR APPROVED EQUAL.

PVC DECK DRAINS SHALL BE PAINTED WITH TWO COATS OF BROWN PRIMER MEETING THE REQUIREMENTS OF ARTICLE 1080-12 OF THE STANDARD SPECIFICATIONS. EACH COAT SHALL BE 0.050mm THICK. DECK DRAINS SHALL BE ROUGHENED PRIOR TO PAINTING. NO SEPARATE PAYMENT SHALL BE MADE FOR PAINTING PVC DECK DRAINS AS THIS IS CONSIDERED INCIDENTAL TO THE PAY ITEM FOR REINFORCED CONCRETE DECK SLAB.

TOP OF FLOOR DRAIN TO BE SET 10mm BELOW SURFACE OF SLAB.

4 - 13mm SQUARE LUGS TO BE GLUED TO THE PVC PLASTIC PIPE AT EQUAL SPACES AROUND THE PIPE DRAIN APPROXIMATELY 100mm FROM THE TOP OF THE PIPE.

COUPLING IN DRAIN PIPE WILL BE PERMITTED AS APPROVED BY THE ENGINEER.

THE 152mm DIA. PVC PIPE AND FITTINGS SHALL BE SCHEDULE 40 AND CONFORM TO ASTM D1785.

DRAIN CONNECTOR DETAILS

(8 DRAINS REQUIRED)

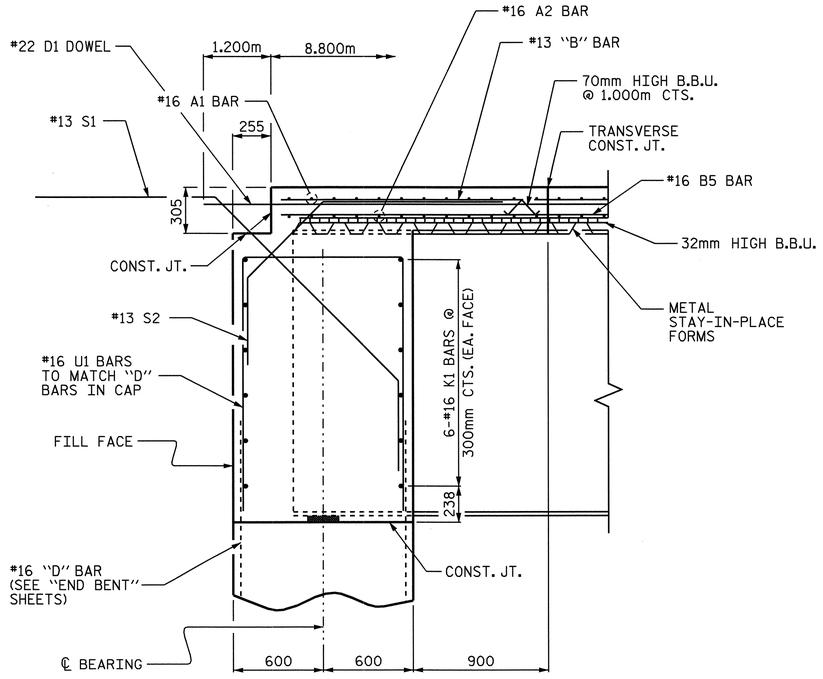

SECTION AT END BENT

(SHOWING ABUTMENT WALL)

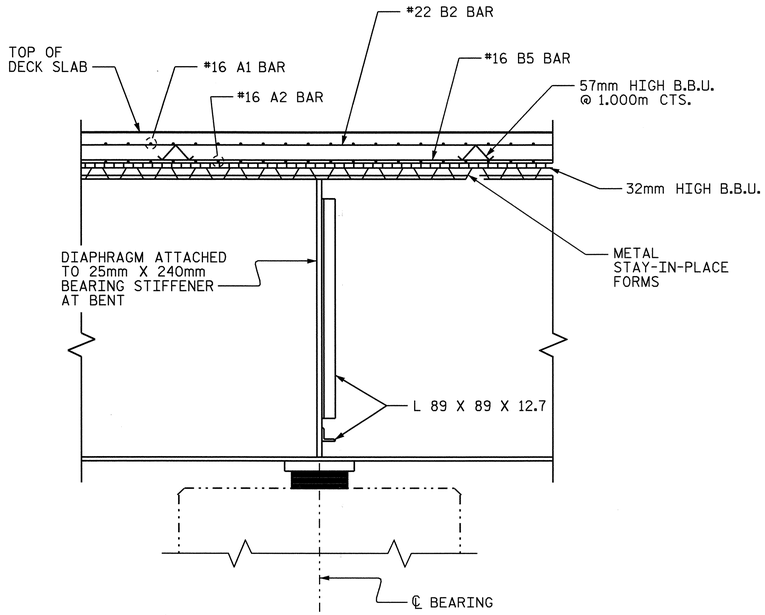

SECTION AT BENT

PROJECT NO. R-0609IA

GUILFORD COUNTY

STATION: 51+85.394 -L-

SHEET 2 OF 2

STATE OF NORTH CAROLINA
DEPARTMENT OF TRANSPORTATION
RALEIGH

SUPERSTRUCTURE

TYPICAL SECTION DETAILS

(SOUTHBOUND COLLECTOR)

NORTH CAROLINA PROFESSIONAL SEAL 23926 ENGINEER BRIAN C. HANKS
11/9/06

REVISIONS						SHEET NO.
NO.	BY:	DATE:	NO.	BY:	DATE:	S-113
1			3			TOTAL SHEETS
2			4			321

STR. #4

DRAWN BY : D. G. ELY DATE : 3/8/05
CHECKED BY : A. B. NAIK DATE : 4/27/05

09-NOV-2006 13:48
R:\Structures\frye\FINAL_PLANS\Str4\R0609IA_sd_TS_STR.#4.dgn
bhanks

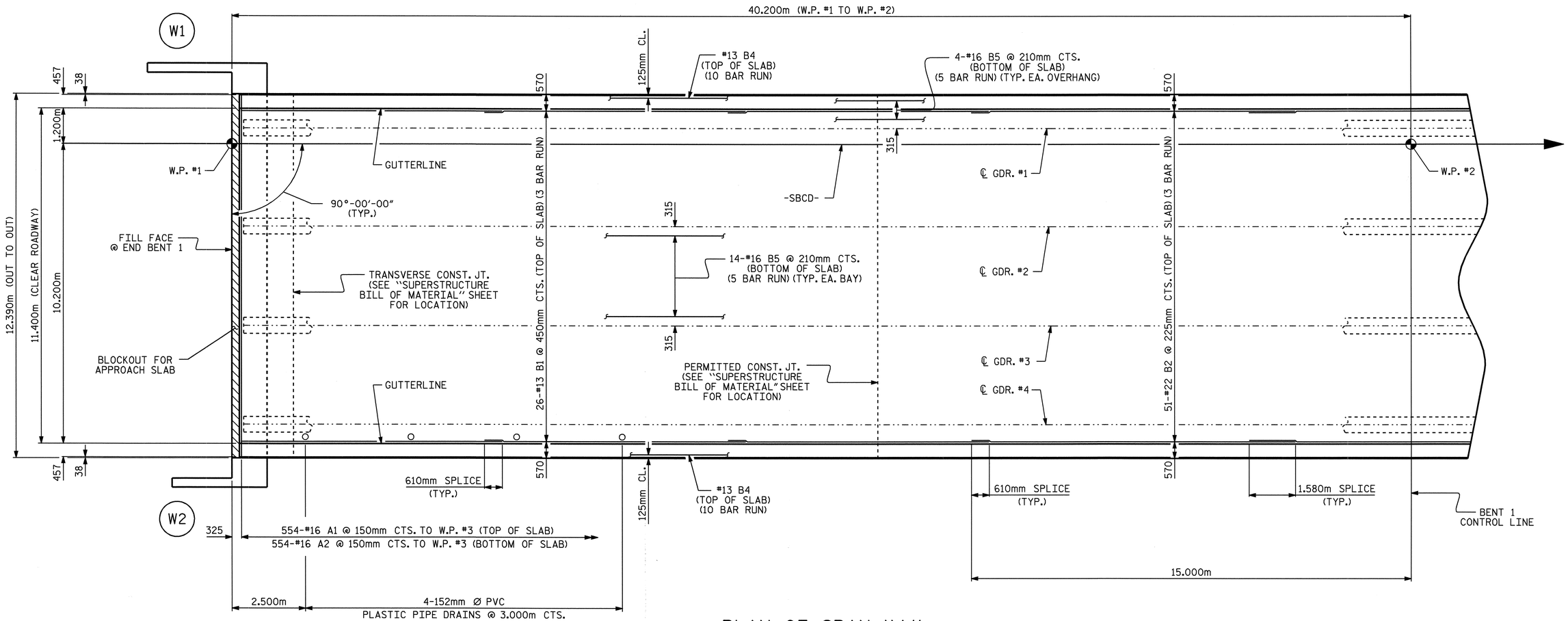

PLAN OF SPAN "A"

NOTES:

FOR BARRIER RAIL REINFORCING STEEL AND DETAILS, SEE "CONCRETE BARRIER RAIL" SHEET.

FOR REINFORCING STEEL IN ABUTMENTS, SEE "PLAN OF SPAN DETAILS" SHEETS.

PROJECT NO. R-0609IA

GUILFORD COUNTY

STATION: 51+85.394 -L-

SHEET 1 OF 5

STATE OF NORTH CAROLINA
DEPARTMENT OF TRANSPORTATION
RALEIGH

SUPERSTRUCTURE

PLAN OF SPANS
SPAN A
(SOUTHBOUND COLLECTOR)

REVISIONS						SHEET NO.
NO.	BY:	DATE:	NO.	BY:	DATE:	S-114
1			3			TOTAL SHEETS
2			4			321

NORTH CAROLINA PROFESSIONAL SEAL 23926 ENGINEER BRIAN C. HANKS
5/22/06

DRAWN BY : D. G. ELY DATE : 3/9/05
CHECKED BY : A. B. NAIK DATE : 4/27/05

15-MAY-2006 15:59
G:\STRUCT~1\frye\FINAL_~1\Str4\ROC5AF~1.DGN
daly

STR. #4

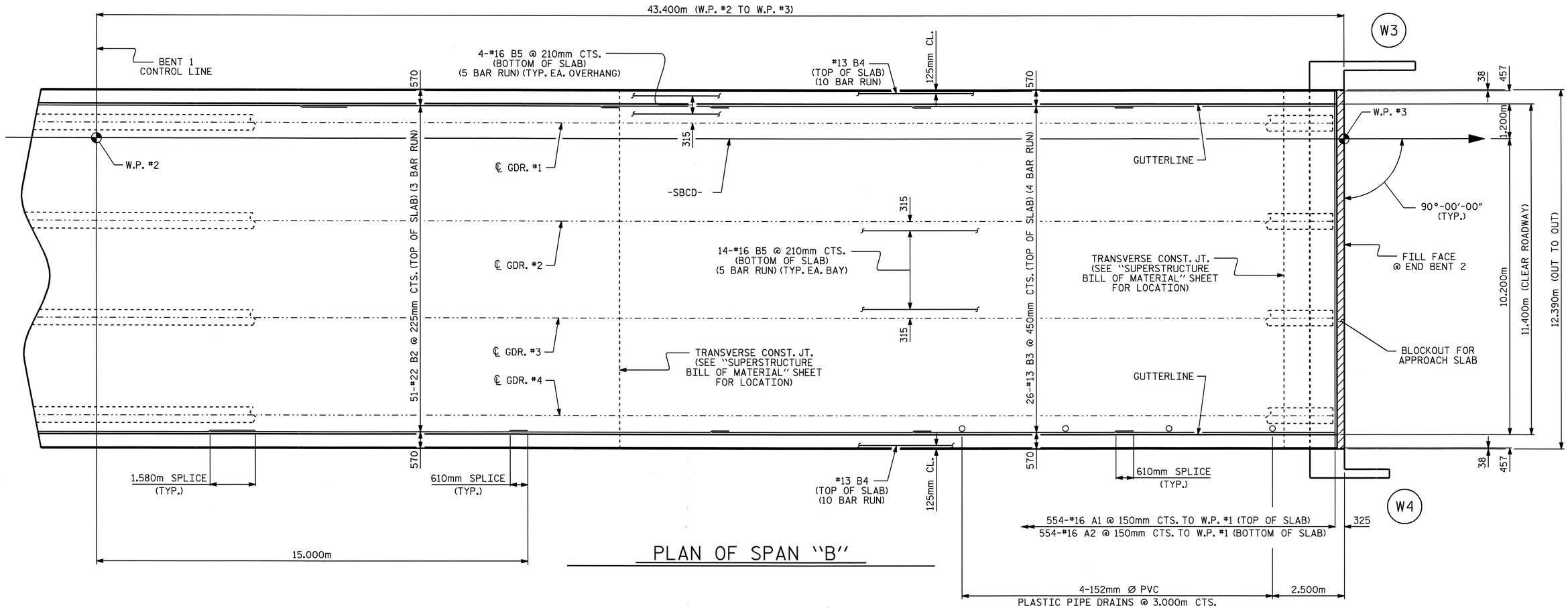

PLAN OF SPAN "B"

NOTES:

FOR BARRIER RAIL REINFORCING STEEL AND DETAILS, SEE "CONCRETE BARRIER RAIL" SHEET.

FOR REINFORCING STEEL IN ABUTMENTS, SEE "PLAN OF SPAN DETAILS" SHEETS.

PROJECT NO. R-0609IA

GUILFORD COUNTY

STATION: 51+85.394 -L-

SHEET 2 OF 5

STATE OF NORTH CAROLINA
DEPARTMENT OF TRANSPORTATION
RALEIGH

SUPERSTRUCTURE

PLAN OF SPANS
SPAN B
(SOUTHBOUND COLLECTOR)

REVISIONS						SHEET NO.
NO.	BY:	DATE:	NO.	BY:	DATE:	S-115
1			3			TOTAL SHEETS
2			4			321

NORTH CAROLINA PROFESSIONAL SEAL 23926 ENGINEER BRIAN C. HAWKS
5/22/06

DRAWN BY : D. G. ELY DATE : 3/9/05
CHECKED BY : A. B. NAIK DATE : 4/27/05

15-MAY-2006 15:59
G:\STRUCT~1\frye\FINAL_~1\Str4\ROC5AF~1.DGN
dely

STR. #4

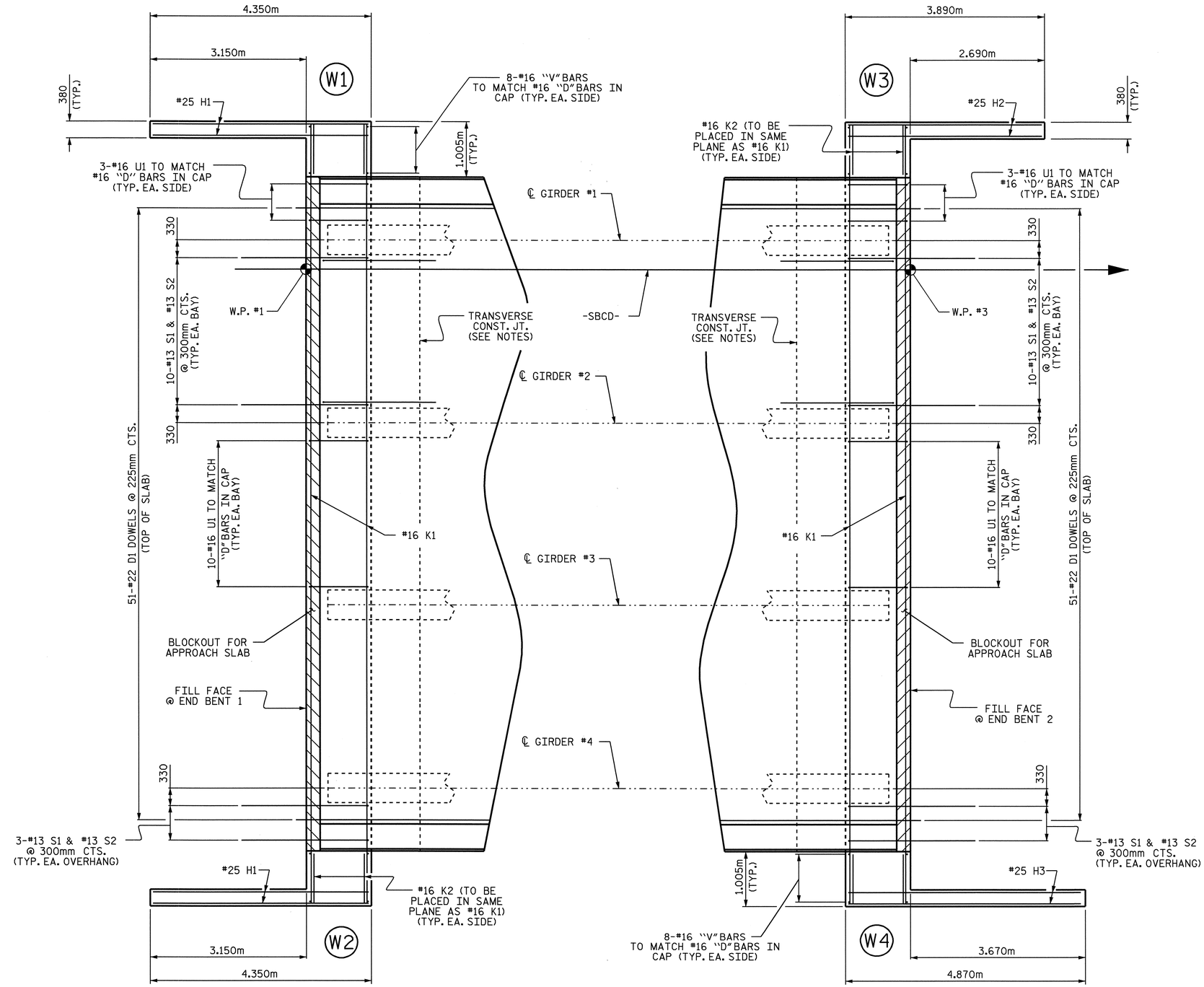

PLAN OF ABUTMENT WALL @ END BENT 1

PLAN OF ABUTMENT WALL @ END BENT 2

NOTES:

FOR SECTION THROUGH ABUTMENT, SEE "TYPICAL SECTION DETAILS", SHEET 2 OF 2.

FOR TRANSVERSE CONSTRUCTION JOINT DETAILS AND LOCATION, SEE "SUPERSTRUCTURE - BILL OF MATERIAL" SHEET.

NORTH CAROLINA PROFESSIONAL SEAL 23926 ENGINEER BRIAN C. HANKS
11/9/06

PROJECT NO. R-0609IA
GUILFORD COUNTY
STATION: 51+85.394 -L-

SHEET 3 OF 5

STATE OF NORTH CAROLINA
DEPARTMENT OF TRANSPORTATION
RALEIGH

SUPERSTRUCTURE
PLAN OF SPANS
DETAILS
(SOUTHBOUND COLLECTOR)

REVISIONS						SHEET NO.
NO.	BY:	DATE:	NO.	BY:	DATE:	S-116
1			3			TOTAL SHEETS
2			4			321

STR. #4

DRAWN BY : D. G. ELY DATE : 3/9/05
CHECKED BY : A. B. NAIK DATE : 4/27/05

09-NOV-2006 13:51
R:\Structures\frye\FINAL_PLANS\Str4\R0609IA_sd_S*_STR.*4.dgn
bhanks

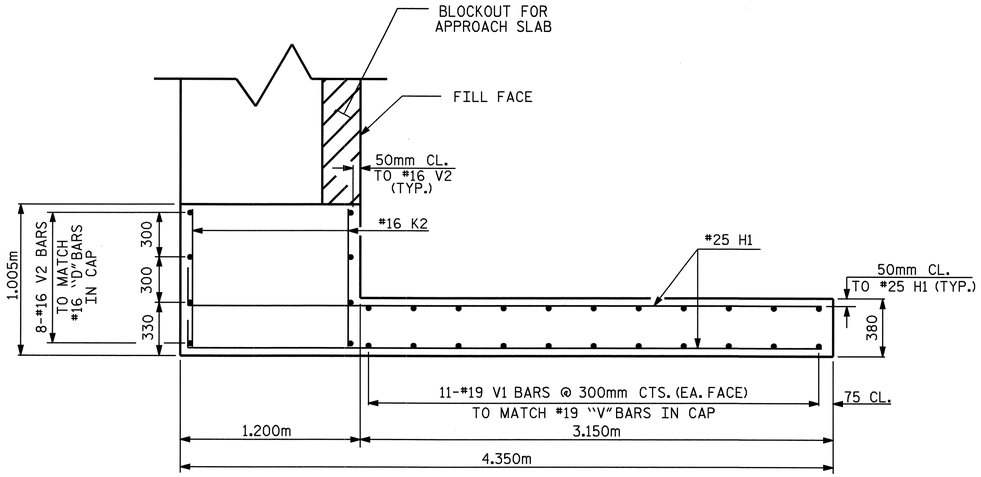

PLAN - W1

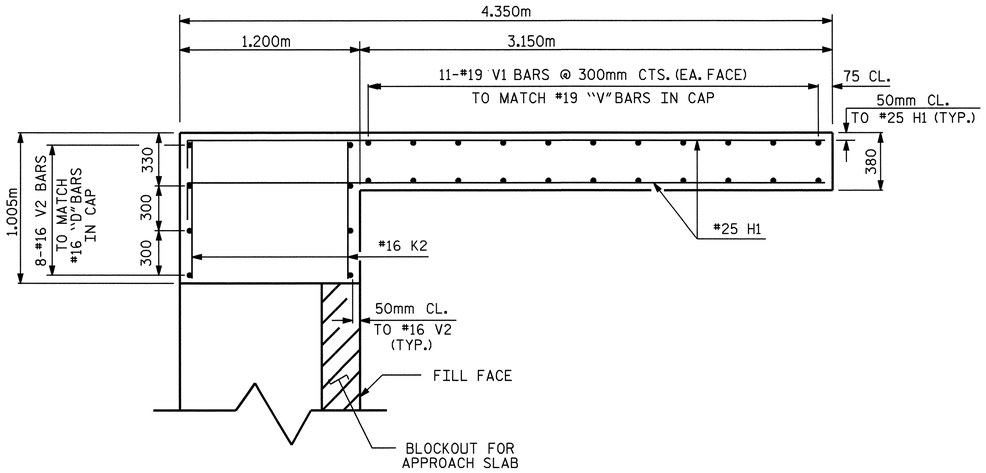

PLAN - W2

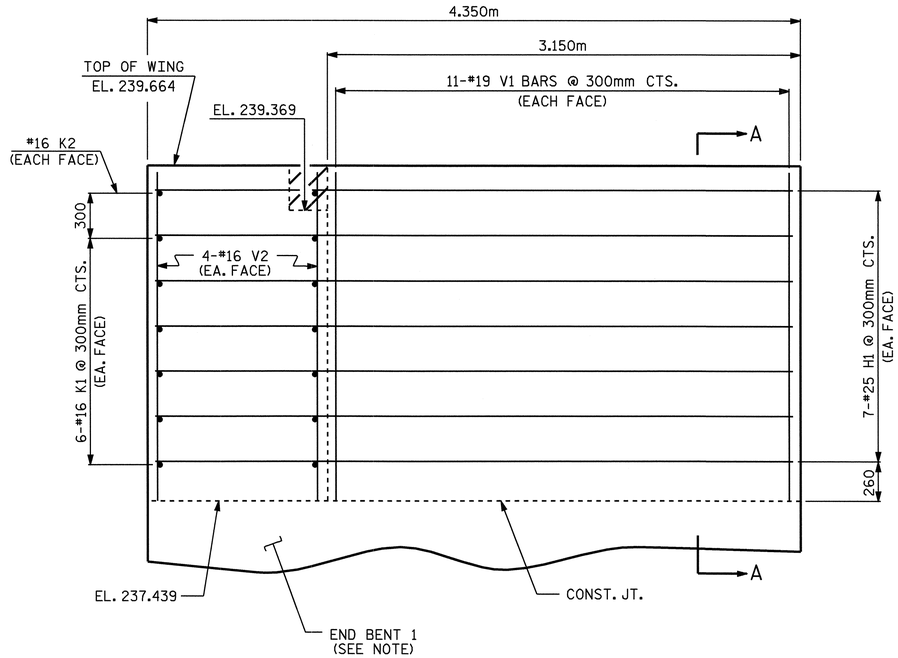

ELEVATION - W1

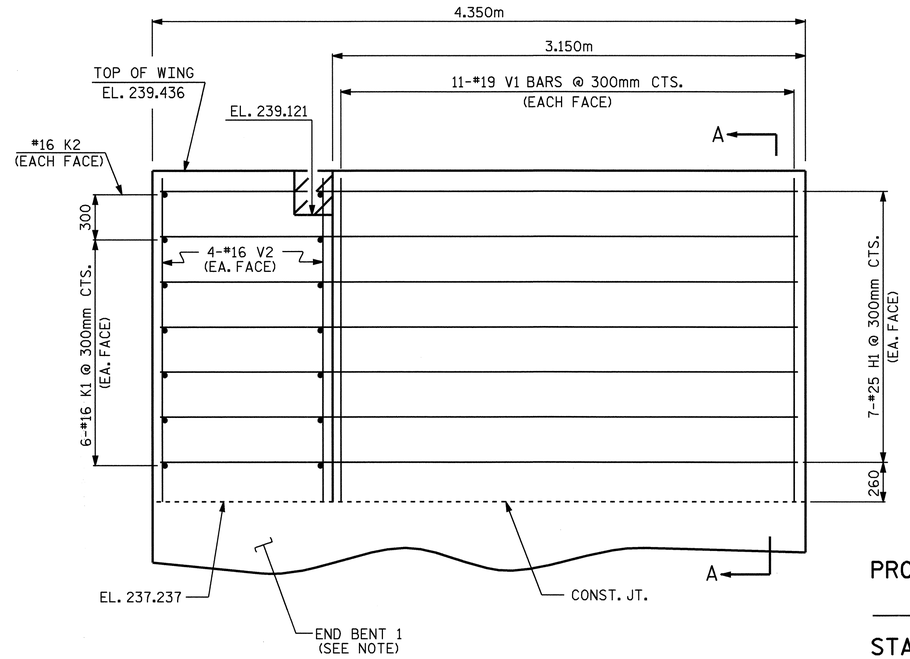

ELEVATION - W2

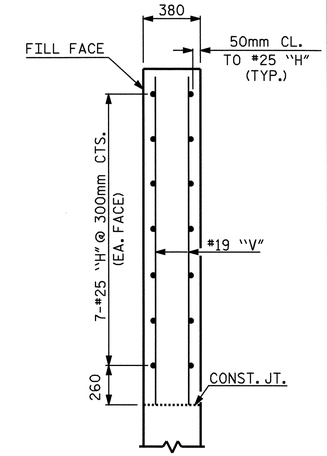

SECTION A-A

ABUTMENT WINGS @ END BENT 1

NOTE: FOR END BENT 1 REINFORCING STEEL AND DETAILS, SEE "SUBSTRUCTURE, END BENT 1" SHEETS.

NORTH CAROLINA PROFESSIONAL SEAL 23926 ENGINEER BRIAN C. HAWKS 5/22/06

PROJECT NO. R-0609IA
GUILFORD COUNTY
STATION: 51+85.394 -L-

SHEET 4 OF 5

STATE OF NORTH CAROLINA
DEPARTMENT OF TRANSPORTATION
RALEIGH

SUPERSTRUCTURE
PLAN OF SPANS DETAILS
(SOUTHBOUND COLLECTOR)

REVISIONS						SHEET NO.
NO.	BY:	DATE:	NO.	BY:	DATE:	S-117
1			3			TOTAL SHEETS
2			4			321

STR. #4

DRAWN BY : D. G. ELY DATE : 4/4/05
CHECKED BY : A. B. NAIK DATE : 4/27/05

15-MAY-2006 15:58
G:\STRUCT~1\frye\FINAL_~1\Str4\ROC5AF~1.DGN
dely

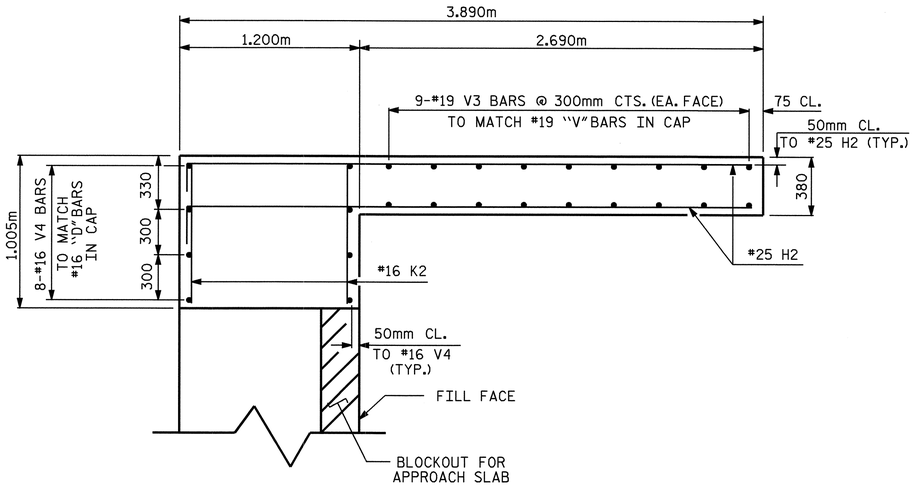

PLAN - W3

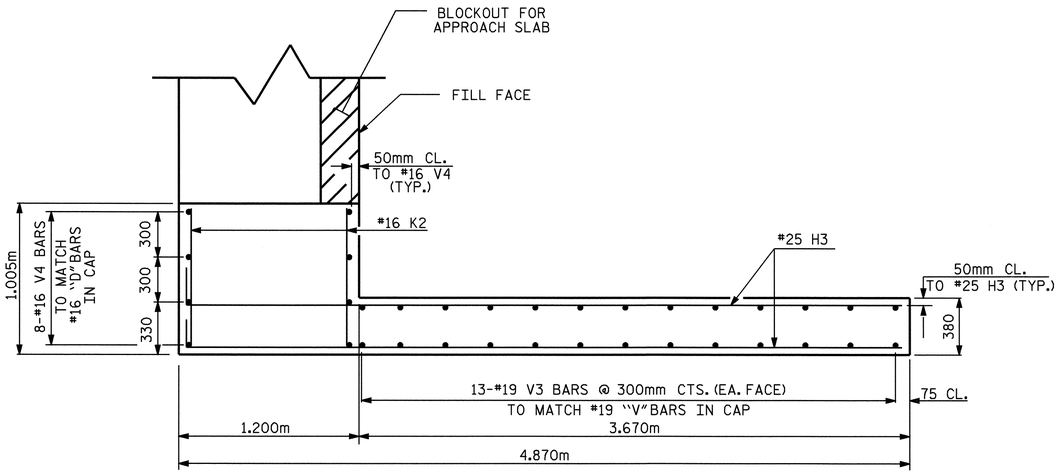

PLAN - W4

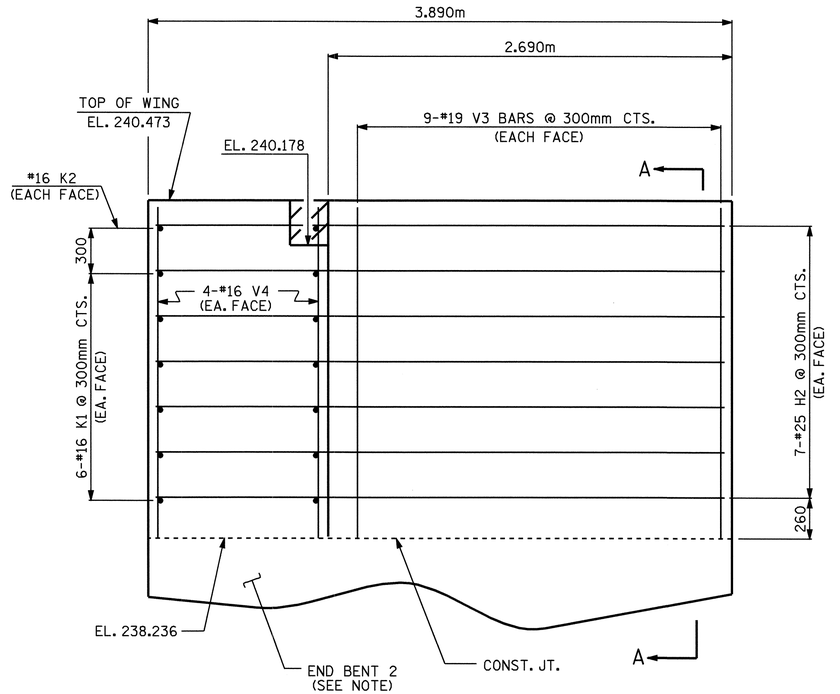

ELEVATION - W3

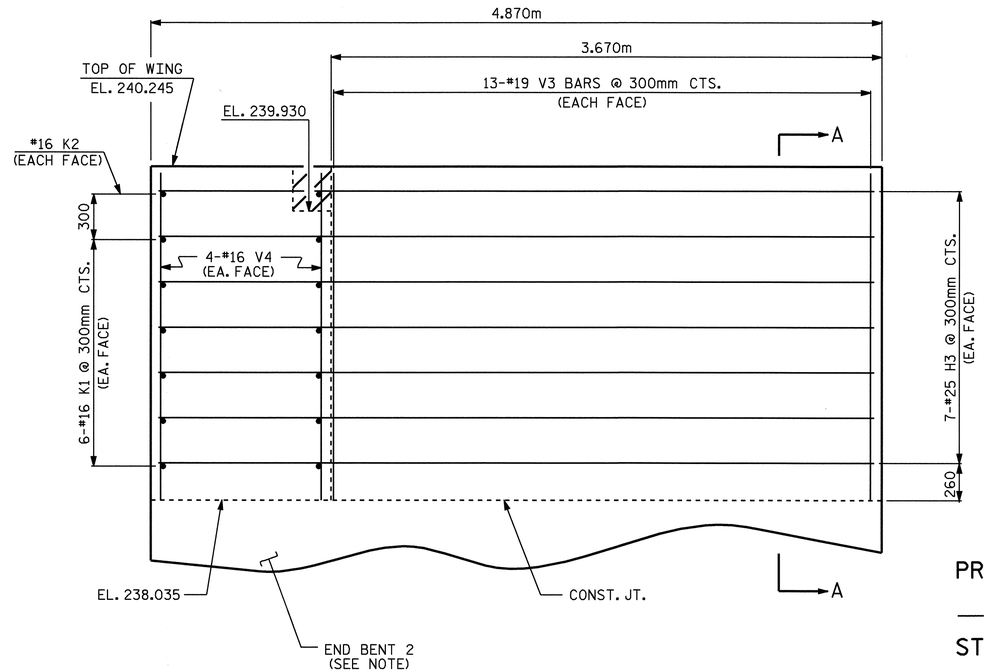

ELEVATION - W4

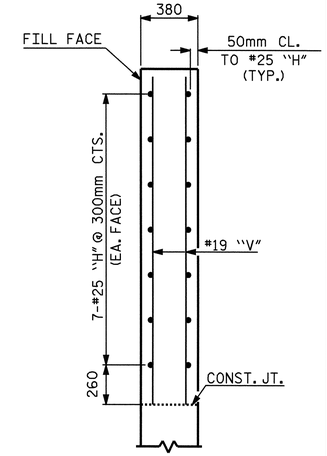

SECTION A-A

ABUTMENT WINGS @ END BENT 2

NOTE: FOR END BENT 2 REINFORCING STEEL AND DETAILS, SEE "SUBSTRUCTURE, END BENT 2" SHEETS.

DRAWN BY : D. G. ELY DATE : 4/4/05
CHECKED BY : A. B. NAIK DATE : 4/27/05

15-MAY-2006 15:58
G:\STRUCT~1\frye\FINAL_~1\Str4\ROC5AF~1.DGN
dely

PROJECT NO. R-0609IA
GUILFORD COUNTY
STATION: 51+85.394 -L-

SHEET 5 OF 5

STATE OF NORTH CAROLINA
DEPARTMENT OF TRANSPORTATION
RALEIGH

SUPERSTRUCTURE

PLAN OF SPANS DETAILS
(SOUTHBOUND COLLECTOR)

NORTH CAROLINA PROFESSIONAL SEAL 23926 ENGINEER BRIAN C. HAWKS
5/22/06

REVISIONS						SHEET NO.
NO.	BY:	DATE:	NO.	BY:	DATE:	S-118
1			3			TOTAL SHEETS
2			4			321

STR. #4

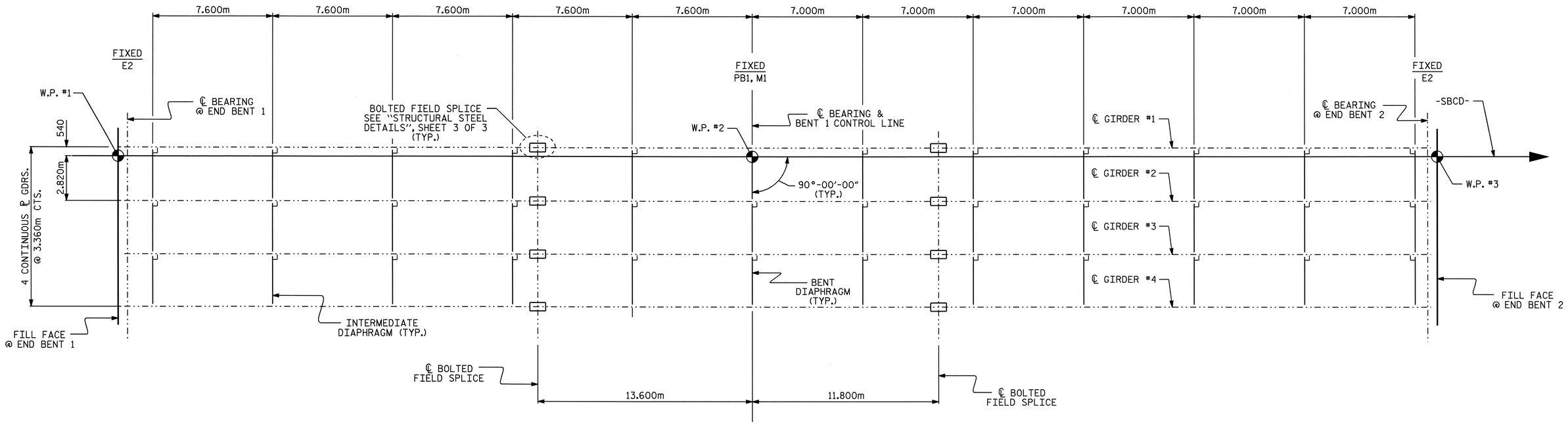

SPAN "A"

SPAN "B"

FRAMING PLAN

PROJECT NO. R-0609IA

GUILFORD COUNTY

STATION: 51+85.394 -L-

STATE OF NORTH CAROLINA
DEPARTMENT OF TRANSPORTATION
RALEIGH

SUPERSTRUCTURE

FRAMING PLAN

(SOUTHBOUND COLLECTOR)

NORTH CAROLINA PROFESSIONAL SEAL 23926 ENGINEER BRIAN C. HANKS
3/22/06

REVISIONS						SHEET NO.
NO.	BY:	DATE:	NO.	BY:	DATE:	S-119
1			3			TOTAL SHEETS
2			4			321

STR. #4

DRAWN BY : D. G. ELY DATE : 3/9/05
CHECKED BY : A. B. NAIK DATE : 4/27/05

15-MAY-2006 15:57
G:\STRUCT~1\frye\FINAL_~1\Str4\R04CFF~1.DGN
dely

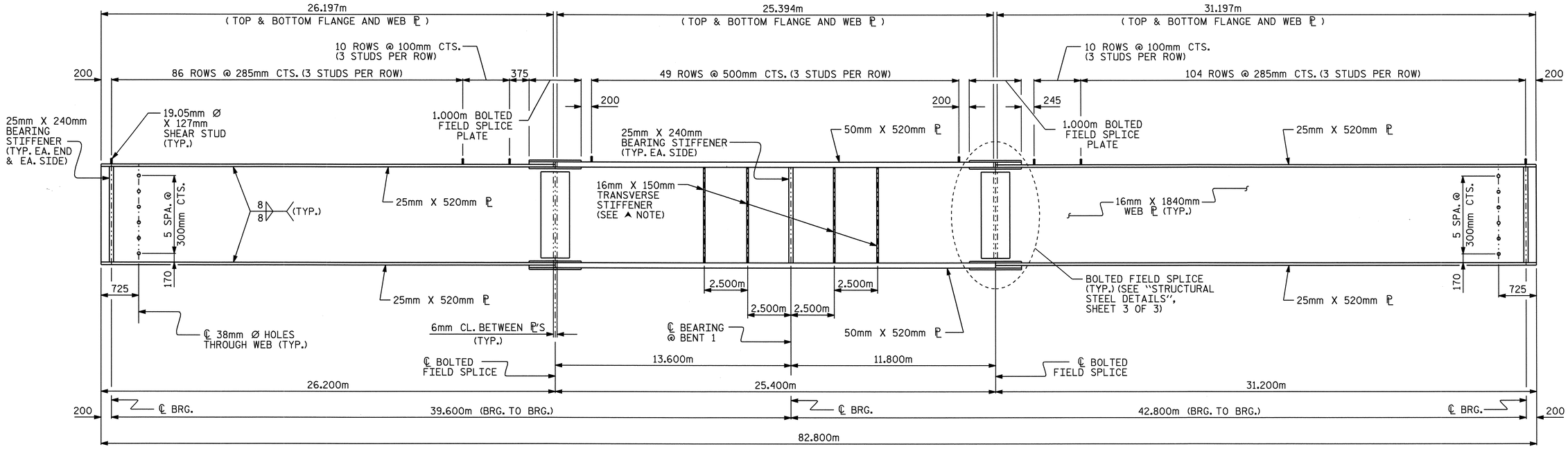

ELEVATION OF GIRDER

▲ NOTE:
TRANSVERSE STIFFENERS ARE TO BE PLACED ON ONE SIDE OF GIRDERS ONLY. TRANSVERSE STIFFENERS ARE NOT TO BE PLACED ON THE OUTSIDE OF EXTERIOR GIRDERS.

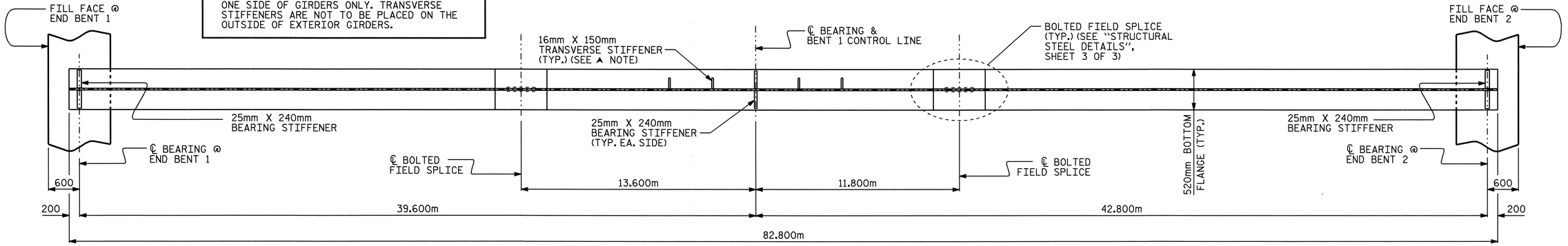

BOTTOM FLANGE DETAIL

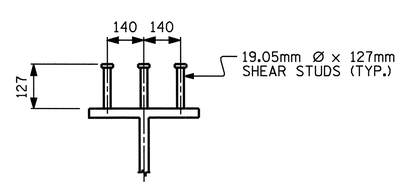

SHEAR STUD DETAILS

(TYP. EA. GIRDER)

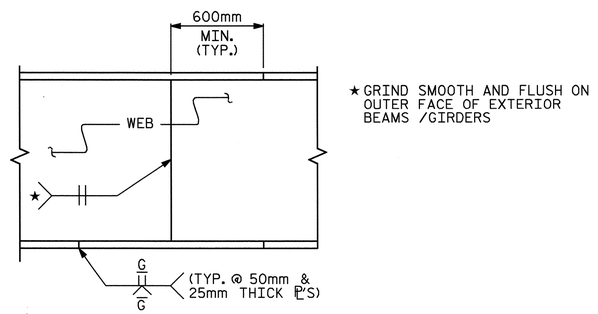

PERMISSIBLE SHOP FLANGE AND WEB SPLICE

PROJECT NO. R-0609IA

GUILFORD COUNTY

STATION: 51+85.394 -L-

SHEET 1 OF 3

STATE OF NORTH CAROLINA
DEPARTMENT OF TRANSPORTATION
RALEIGH

SUPERSTRUCTURE

STRUCTURAL STEEL DETAILS

(SOUTHBOUND COLLECTOR)

NORTH CAROLINA PROFESSIONAL SEAL 23926 ENGINEER BRIAN C. HANKS
5/22/06

REVISIONS						SHEET NO.
NO.	BY:	DATE:	NO.	BY:	DATE:	S-120
1			3			TOTAL SHEETS
2			4			321

STR. #4

DRAWN BY : D. G. ELY DATE : 3/9/05
CHECKED BY : A. B. NAIK DATE : 4/27/05

15-MAY-2006 15:56
G:\STRUCT~1\frye\FINAL_~1\Str4\ROCDBF~1.DGN
dely

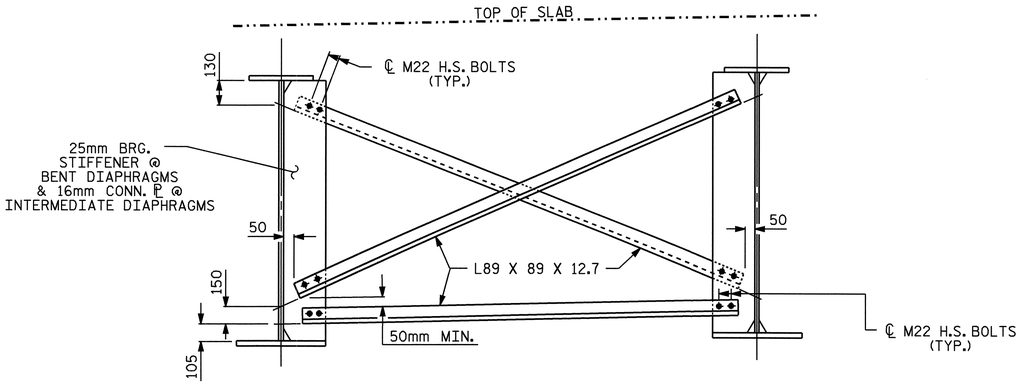

TYPICAL BENT & INTERMEDIATE DIAPHRAGM

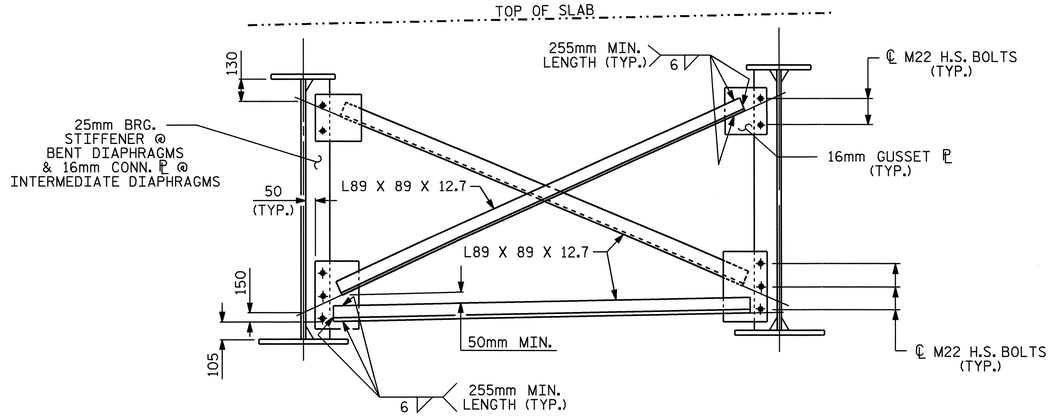

OPTIONAL BENT & INTERMEDIATE DIAPHRAGM

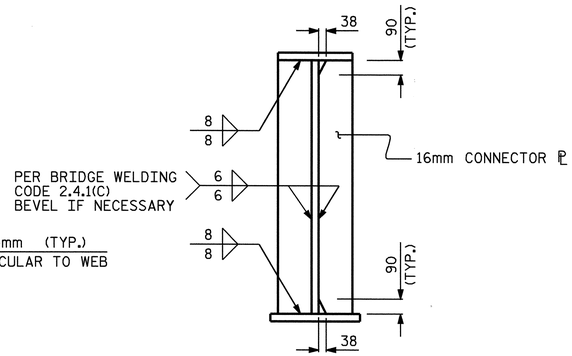

CONNECTOR ℙ

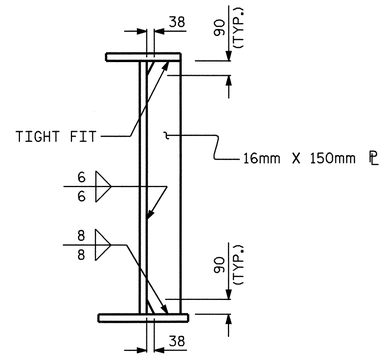

TRANSVERSE STIFFENER

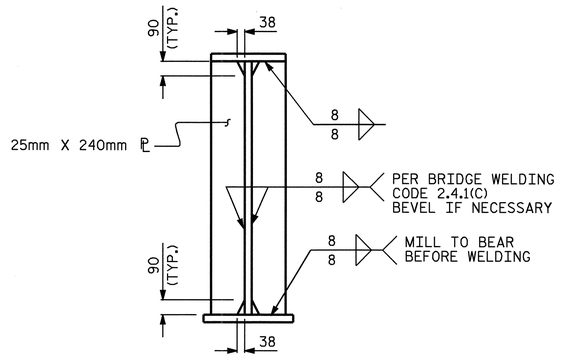

BEARING STIFFENER

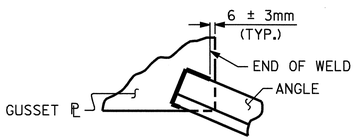

TYPICAL ANGLE TO GUSSET PLATE CONNECTIONS

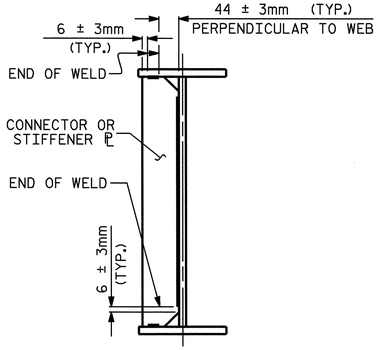

TYPICAL STIFFENER OR CONNECTOR PLATE CONNECTIONS

WELD TERMINATION DETAILS

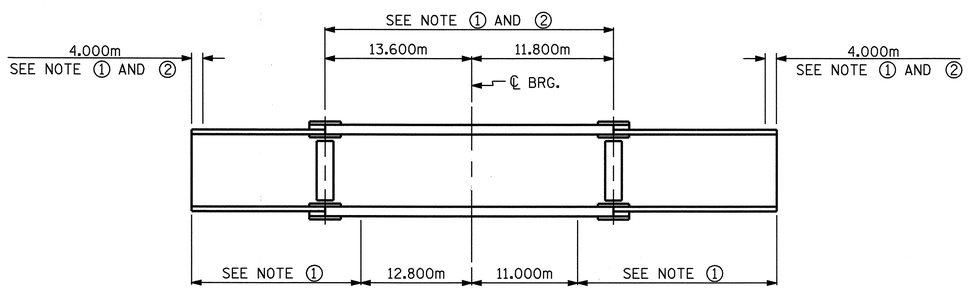

NOTE ① : CHARPY V-NOTCH TESTS ARE REQUIRED FOR ALL TOP OR BOTTOM FLANGE PLATES WHICH FALL WITHIN THESE LIMITS, ALL WEB PLATES, AND ALL SPLICE PLATES. IF A PERMITTED SHOP FLANGE SPLICE IS NOT USED, CHARPY V-NOTCH TESTS WILL BE REQUIRED FOR THE ENTIRE FLANGE PLATE. FOR CHARPY V-NOTCH TESTS, SEE ARTICLE 1072-9 OF THE STANDARD SPECIFICATIONS.

NOTE ② : NO WELDING OF FORMS OR FALSEWORK TO THE TOP FLANGE WILL BE PERMITTED IN THIS REGION.

CHARPY V-NOTCH TESTS FOR CONTINUOUS PLATE GIRDERS

NORTH CAROLINA PROFESSIONAL SEAL 23926 ENGINEER BRIAN C. HANKS
3/22/06

PROJECT NO. R-0609IA
GUILFORD COUNTY
STATION: 51+85.394 -L-

SHEET 2 OF 3

STATE OF NORTH CAROLINA
DEPARTMENT OF TRANSPORTATION
RALEIGH

SUPERSTRUCTURE

STRUCTURAL STEEL DETAILS

(SOUTHBOUND COLLECTOR)

REVISIONS						SHEET NO.
NO.	BY:	DATE:	NO.	BY:	DATE:	S-121
1			3			TOTAL SHEETS
2			4			321

DRAWN BY : D. G. ELY DATE : 3/9/05
CHECKED BY : A. B. NAIK DATE : 4/27/05

15-MAY-2006 15:56
G:\STRUCT~1\frye\FINAL_~1\Str4\ROCDBF~1.DGN
daly

STR. #4

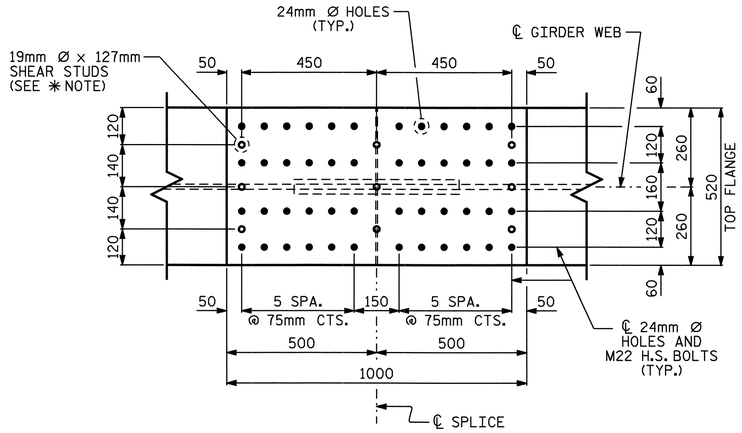

PLAN (TOP OF TOP FLANGE)

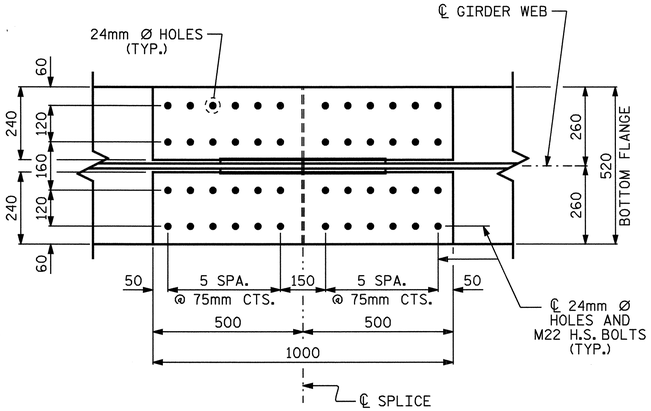

PLAN (TOP OF BOTTOM FLANGE)

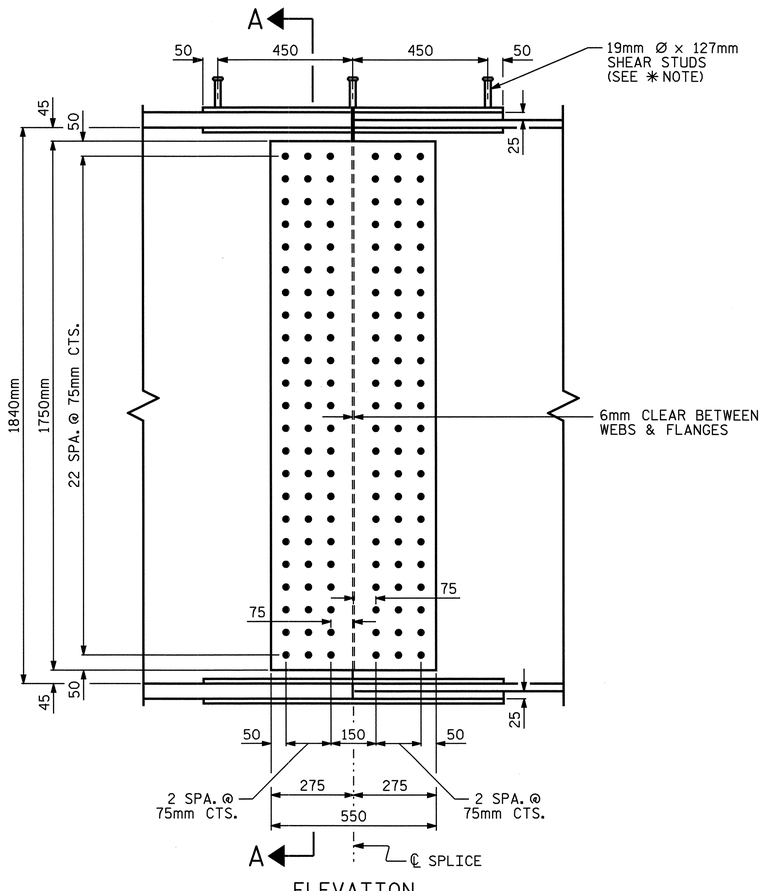

ELEVATION

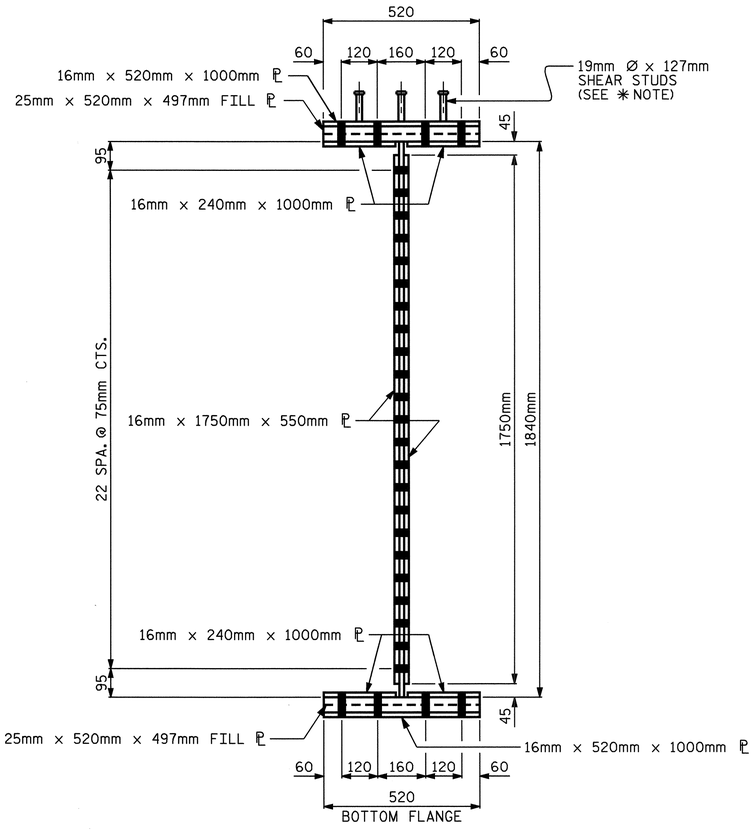

SECTION A-A

BOLTED FIELD SPLICE DETAILS

(TYPICAL EACH FIELD SPLICE)

NOTES:

ALL STRUCTURAL STEEL SHALL BE AASHTO M270 GRADE 345W AND PAINTED IN ACCORDANCE WITH SYSTEM 4 OF ARTICLE 442-7 OF THE STANDARD SPECIFICATIONS UNLESS OTHERWISE NOTED ON THE PLANS.

ALL DIMENSIONS SHOWN ARE HORIZONTAL OR VERTICAL, UNLESS OTHERWISE NOTED.

ALL FIELD CONNECTIONS TO BE 22.23mm HIGH STRENGTH BOLTS UNLESS OTHERWISE NOTED.

BEARING STIFFENERS ARE TO BE PLACED NORMAL TO THE WEB OF THE GIRDER AND SHALL BE PLUMB.

CHARPY V-NOTCH TEST IS REQUIRED, SEE SHEET 2 OF 3.

SHOP SPLICES ARE PERMITTED TO LIMIT THE MAXIMUM REQUIRED FLANGE PIECE LENGTHS TO 18 METERS AND WEB PIECE LENGTHS TO 14 METERS. PERMITTED FLANGE AND WEB SHOP SPLICES SHALL NOT BE LOCATED WITHIN 4.5 METERS OF MAXIMUM DEAD LOAD DEFLECTION NOR WITHIN 4.5 METERS OF INTERMEDIATE BEARINGS OF CONTINUOUS UNITS. KEEP 600mm MINIMUM BETWEEN WEB AND FLANGE SHOP SPLICES. KEEP 150mm MINIMUM BETWEEN CONNECTOR PLATE OR TRANSVERSE STIFFENER WELDS AND WEB OR FLANGE SHOP SPLICES.

STUDS ON GIRDERS MAY BE SHIFTED UP TO 25mm IF NECESSARY TO CLEAR FLANGE SPLICE WELD.

END OF GIRDERS SHALL BE PLUMB.

✳ SHEAR STUDS ARE TO BE SHOP WELDED ON TOP OF PLATE BEFORE FIELD ASSEMBLY.

AT THE CONTRACTOR'S OPTION, THE DIAPHRAGM WITH THE WELDED GUSSET PLATES MAY BE USED IN LIEU OF THE DIAPHRAGM WITH BOLTED ANGLES AT NO ADDITIONAL COST TO THE DEPARTMENT.

TENSION ON THE AASHTO M164 BOLTS SHALL BE CALIBRATED USING DIRECT TENSION INDICATOR WASHERS IN ACCORDANCE WITH ARTICLE 440-10 OF THE STANDARD SPECIFICATIONS.

BEARING STIFFENER MAY REQUIRE COPING IF WIDER THAN BOTTOM FLANGE TO AVOID INTERFERENCE WITH THE ANCHOR BOLT.

TRANSVERSE STIFFENERS SHALL NOT BE PLACED ON THE OUTSIDE OF EXTERIOR GIRDERS.

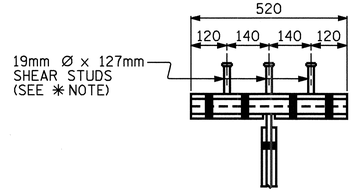

SHEAR STUD DETAIL FOR TOP FLANGE SPLICE PLATE

PROJECT NO. R-0609IA

GUILFORD COUNTY

STATION: 51+85.394 -L-

SHEET 3 OF 3

STATE OF NORTH CAROLINA
DEPARTMENT OF TRANSPORTATION
RALEIGH

SUPERSTRUCTURE

STRUCTURAL STEEL DETAILS

(SOUTHBOUND COLLECTOR)

REVISIONS						SHEET NO.
NO.	BY:	DATE:	NO.	BY:	DATE:	S-122
1			3			TOTAL SHEETS
2			4			321

NORTH CAROLINA PROFESSIONAL SEAL 23926 ENGINEER BRIAN C. HANKS
5/22/06

DRAWN BY : D. G. ELY DATE : 3/9/05
CHECKED BY : A. B. NAIK DATE : 4/27/05

STR. #4

NOTES

FOR ELASTOMERIC BEARINGS, SEE SPECIAL PROVISIONS.

— LOAD RATINGS —	
	MAX.D.L.+L.L.
TYPE III	512 kN

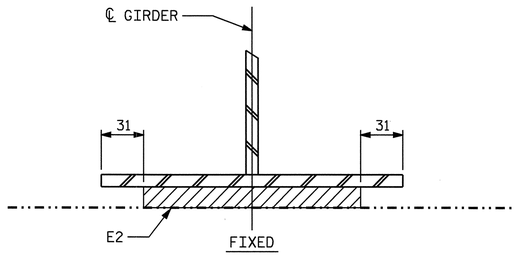

SECTION

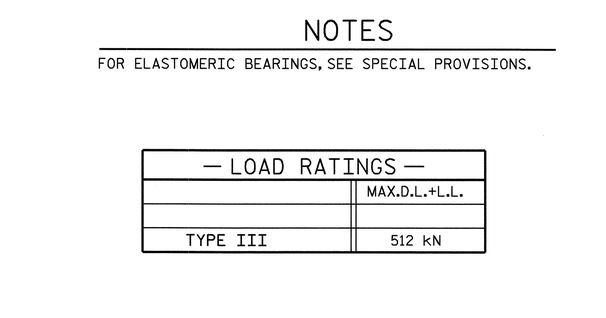

TYPICAL SECTION OF ELASTOMERIC BEARINGS

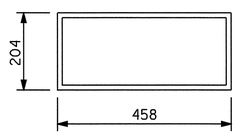

E2 (8 REQ'D)

PLAN VIEW OF ELASTOMERIC BEARING

TYPE III

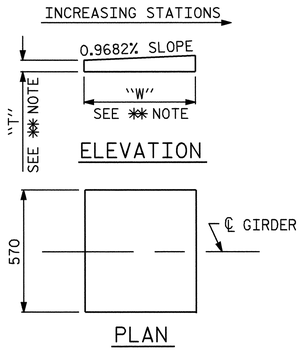

PLAN

✱✱ NOTE:
DIMENSIONS "W" AND "T" ARE TO BE DETERMINED BY THE MANUFACTURER.

SOLE PLATE DETAILS

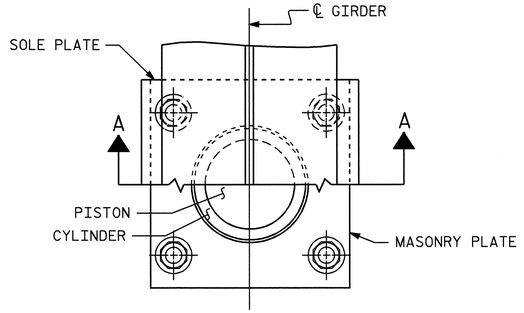

CUT-AWAY PLAN

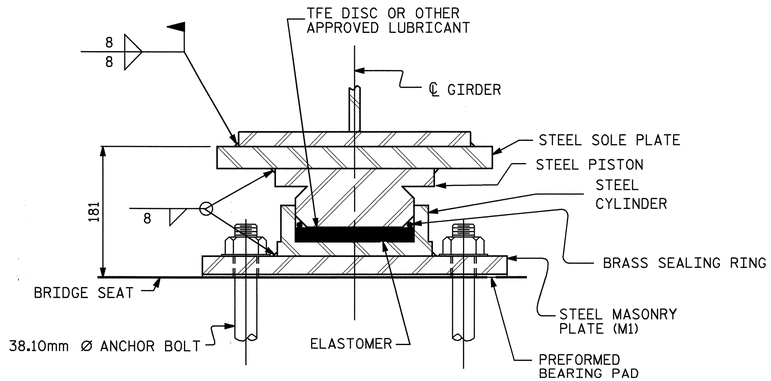

SECTION A-A

PB1, FIXED
(4 REQ'D.)

POT BEARING DETAILS

NOTES

FOR POT BEARINGS, SEE SPECIAL PROVISIONS.

AT ALL POINTS OF SUPPORT, NUTS FOR ANCHOR BOLTS SHALL BE TIGHTENED FINGER TIGHT AND GIVEN AN ADDITIONAL ¼ TURN. THE THREAD OF THE NUT AND BOLT SHALL THEN BE BURRED WITH A SHARP POINTED TOOL.

WHEN WELDING THE SOLE PLATE TO THE GIRDER, USE TEMPERATURE INDICATING WAX PENS, OR OTHER SUITABLE MEANS, TO ENSURE THAT THE TEMPERATURE OF THE BEARING DOES NOT EXCEED 121°C TEMPERATURES ABOVE THIS MAY DAMAGE THE TFE OR ELASTOMER.

ALL SURFACES OF BEARING PLATES SHALL BE SMOOTH AND STRAIGHT.

FOR THERMAL SPRAYED COATINGS (METALLIZATION), SEE SPECIAL PROVISIONS.

THE CONTRACTOR MAY SUBSTITUTE DISC BEARINGS FOR THE POT BEARINGS SHOWN. FOR OPTIONAL DISC BEARINGS, SEE SPECIAL PROVISIONS.

SOLE PLATES SHALL BE WELDED TO THE GIRDER FLANGES BEFORE FALSEWORK IS PLACED.

TABLE FOR LOADS

BEARING	LOCATION	VERTICAL LOAD (kN)			LATERAL LOAD (kN)
		DEAD	LIVE	TOTAL	
PB1 (FIXED)	BENT 1	1770	620	2390	354

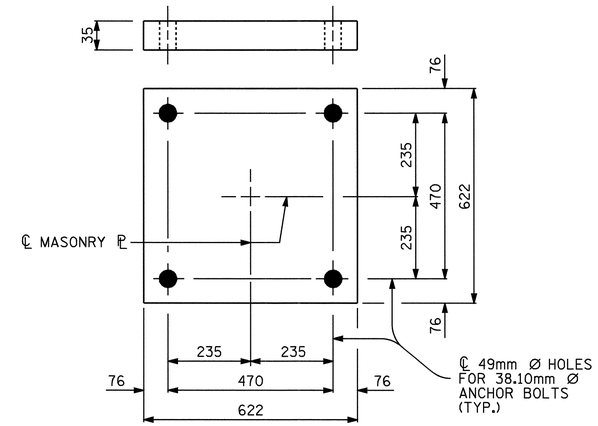

PLAN
M1 (4 REQ'D.)

MASONRY PLATE DETAILS

PROJECT NO. R-0609IA
GUILFORD COUNTY
STATION: 51+85.394 -L-

STATE OF NORTH CAROLINA
DEPARTMENT OF TRANSPORTATION
RALEIGH

SUPERSTRUCTURE

BEARING DETAILS

(SOUTHBOUND COLLECTOR)

NORTH CAROLINA PROFESSIONAL SEAL 23926 ENGINEER BRIAN C. HANKS
5/2/06

REVISIONS						SHEET NO.
NO.	BY:	DATE:	NO.	BY:	DATE:	S-123
1			3			TOTAL SHEETS
2			4			321

DRAWN BY : D. G. ELY DATE : 3/9/05
CHECKED BY : A. B. NAIK DATE : 4/27/05

15-MAY-2006 15:55
G:\STRUCT~1\frye\FINAL_~1\Str4\R0609I~4.DGN
dely

STR. #4

DEAD LOAD DEFLECTION TABLE FOR GIRDERS

GIRDER #1

	SPAN "A"																				SPAN "B"																					
TWENTIETH POINTS	BRG.	.05	.10	.15	.20	.25	.30	.35	.40	.45	.50	.55	.60	.65	.70	.75	.80	.85	.90	.95	BRG.	.05	.10	.15	.20	.25	.30	.35	.40	.45	.50	.55	.60	.65	.70	.75	.80	.85	.90	.95	BRG.
DEFLECTION DUE TO WEIGHT OF GIRDER	0.000	0.002	0.003	0.005	0.006	0.007	0.008	0.008	0.009	0.008	0.008	0.007	0.006	0.005	0.004	0.003	0.002	0.001	0.000	0.000	0.000	0.001	0.002	0.003	0.005	0.006	0.008	0.010	0.011	0.012	0.013	0.014	0.014	0.014	0.013	0.012	0.010	0.008	0.005	0.003	0.000
DEFLECTION DUE TO WEIGHT OF SLAB *	0.000	0.005	0.012	0.016	0.022	0.024	0.027	0.029	0.028	0.028	0.026	0.024	0.021	0.017	0.013	0.009	0.005	0.003	0.001	0.000	0.000	0.002	0.005	0.011	0.016	0.024	0.029	0.035	0.042	0.046	0.049	0.051	0.051	0.050	0.046	0.042	0.035	0.028	0.020	0.010	0.000
DEFLECTION DUE TO WEIGHT OF RAIL	0.000	0.001	0.001	0.002	0.002	0.003	0.003	0.003	0.003	0.003	0.003	0.002	0.002	0.002	0.001	0.001	0.001	0.000	0.000	0.000	0.000	0.000	0.001	0.001	0.002	0.002	0.003	0.004	0.004	0.005	0.005	0.005	0.005	0.005	0.005	0.004	0.004	0.003	0.002	0.001	0.000
TOTAL DEAD LOAD DEFLECTION	0.000	0.008	0.016	0.023	0.030	0.034	0.038	0.040	0.040	0.039	0.037	0.033	0.029	0.024	0.018	0.013	0.008	0.004	0.001	0.000	0.000	0.003	0.008	0.015	0.023	0.032	0.040	0.049	0.057	0.063	0.067	0.070	0.070	0.069	0.064	0.058	0.049	0.039	0.027	0.014	0.000
REQUIRED CAMBER	0	8	16	23	30	34	38	40	40	39	37	33	29	24	18	13	8	4	1	0	0	3	8	15	23	32	40	49	57	63	67	70	70	69	64	58	49	39	27	14	0

GIRDERS #2 & #3

	SPAN "A"																				SPAN "B"																					
TWENTIETH POINTS	BRG.	.05	.10	.15	.20	.25	.30	.35	.40	.45	.50	.55	.60	.65	.70	.75	.80	.85	.90	.95	BRG.	.05	.10	.15	.20	.25	.30	.35	.40	.45	.50	.55	.60	.65	.70	.75	.80	.85	.90	.95	BRG.
DEFLECTION DUE TO WEIGHT OF GIRDER	0.000	0.002	0.003	0.005	0.006	0.007	0.008	0.008	0.009	0.008	0.008	0.007	0.006	0.005	0.004	0.003	0.002	0.001	0.000	0.000	0.000	0.001	0.002	0.003	0.005	0.006	0.008	0.010	0.011	0.012	0.013	0.014	0.014	0.014	0.013	0.012	0.010	0.008	0.005	0.003	0.000
DEFLECTION DUE TO WEIGHT OF SLAB *	0.000	0.006	0.014	0.019	0.024	0.028	0.031	0.033	0.032	0.032	0.029	0.027	0.024	0.019	0.015	0.010	0.006	0.004	0.001	0.000	0.000	0.002	0.006	0.013	0.018	0.027	0.034	0.040	0.047	0.052	0.056	0.058	0.059	0.057	0.053	0.048	0.040	0.032	0.023	0.011	0.000
DEFLECTION DUE TO WEIGHT OF RAIL	0.000	0.001	0.001	0.002	0.002	0.003	0.003	0.003	0.003	0.003	0.003	0.002	0.002	0.002	0.001	0.001	0.001	0.000	0.000	0.000	0.000	0.000	0.001	0.001	0.002	0.002	0.003	0.004	0.004	0.005	0.005	0.005	0.005	0.005	0.005	0.004	0.004	0.003	0.002	0.001	0.000
TOTAL DEAD LOAD DEFLECTION	0.000	0.009	0.018	0.026	0.032	0.038	0.042	0.044	0.044	0.043	0.040	0.036	0.032	0.026	0.020	0.014	0.009	0.005	0.001	0.000	0.000	0.003	0.009	0.017	0.025	0.035	0.045	0.054	0.062	0.069	0.074	0.077	0.078	0.076	0.071	0.064	0.054	0.043	0.030	0.015	0.000
REQUIRED CAMBER	0	9	18	26	32	38	42	44	44	43	40	36	32	26	20	14	9	5	1	0	0	3	9	17	25	35	45	54	62	69	74	77	78	76	71	64	54	43	30	15	0

GIRDER #4

	SPAN "A"																				SPAN "B"																					
TWENTIETH POINTS	BRG.	.05	.10	.15	.20	.25	.30	.35	.40	.45	.50	.55	.60	.65	.70	.75	.80	.85	.90	.95	BRG.	.05	.10	.15	.20	.25	.30	.35	.40	.45	.50	.55	.60	.65	.70	.75	.80	.85	.90	.95	BRG.
DEFLECTION DUE TO WEIGHT OF GIRDER	0.000	0.002	0.003	0.005	0.006	0.007	0.008	0.008	0.009	0.008	0.008	0.007	0.006	0.005	0.004	0.003	0.002	0.001	0.000	0.000	0.000	0.001	0.002	0.003	0.005	0.006	0.008	0.010	0.011	0.012	0.013	0.014	0.014	0.014	0.013	0.012	0.010	0.008	0.005	0.003	0.000
DEFLECTION DUE TO WEIGHT OF SLAB *	0.000	0.005	0.012	0.016	0.022	0.024	0.027	0.029	0.028	0.028	0.026	0.024	0.021	0.017	0.013	0.009	0.005	0.003	0.001	0.000	0.000	0.002	0.005	0.011	0.016	0.024	0.029	0.035	0.042	0.046	0.049	0.051	0.051	0.050	0.046	0.042	0.035	0.028	0.020	0.010	0.000
DEFLECTION DUE TO WEIGHT OF RAIL	0.000	0.001	0.001	0.002	0.002	0.003	0.003	0.003	0.003	0.003	0.003	0.002	0.002	0.002	0.001	0.001	0.001	0.000	0.000	0.000	0.000	0.000	0.001	0.001	0.002	0.002	0.003	0.004	0.004	0.005	0.005	0.005	0.005	0.005	0.005	0.004	0.004	0.003	0.002	0.001	0.000
TOTAL DEAD LOAD DEFLECTION	0.000	0.008	0.016	0.023	0.030	0.034	0.038	0.040	0.040	0.039	0.037	0.033	0.029	0.024	0.018	0.013	0.008	0.004	0.001	0.000	0.000	0.003	0.008	0.015	0.023	0.032	0.040	0.049	0.057	0.063	0.067	0.070	0.070	0.069	0.064	0.058	0.049	0.039	0.027	0.014	0.000
REQUIRED CAMBER	0	8	16	23	30	34	38	40	40	39	37	33	29	24	18	13	8	4	1	0	0	3	8	15	23	32	40	49	57	63	67	70	70	69	64	58	49	39	27	14	0

* INCLUDES SLAB, BUILDUPS & STAY-IN-PLACE FORMS.
ALL VALUES ARE SHOWN IN METERS, EXCEPT "REQUIRED CAMBER" WHICH IS SHOWN IN MILLIMETERS.

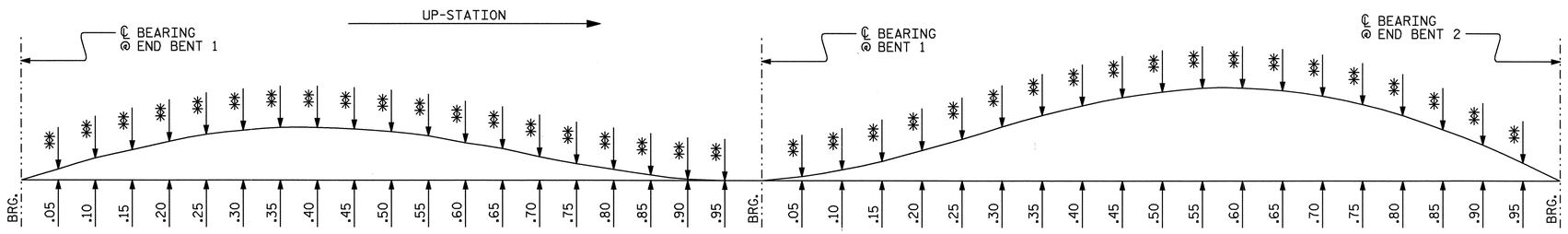

SCHEMATIC CAMBER ORDINATES

PROJECT NO. R-0609IA
GUILFORD COUNTY
STATION: 51+85.394 -L-

STATE OF NORTH CAROLINA
DEPARTMENT OF TRANSPORTATION
RALEIGH

SUPERSTRUCTURE
DEAD LOAD DEFLECTIONS
(SOUTHBOUND COLLECTOR)

NORTH CAROLINA PROFESSIONAL SEAL 23926 ENGINEER BRIAN C. HANKS
5/22/06

REVISIONS						SHEET NO.
NO.	BY:	DATE:	NO.	BY:	DATE:	S-124
1			3			TOTAL SHEETS
2			4			321

DRAWN BY : D. G. ELY DATE : 3/9/05
CHECKED BY : A. B. NAIK DATE : 4/27/05

15-MAY-2006 15:55
G:\STRUCT~1\frye\FINAL_~1\Str4\R04A73~1.DGN
dely

STR. #4

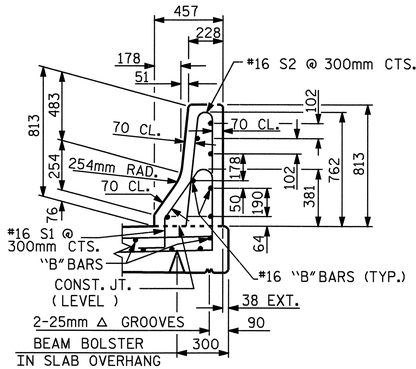

SECTION THRU RAIL

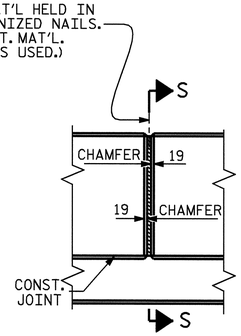

ELEVATION AT EXPANSION JOINTS

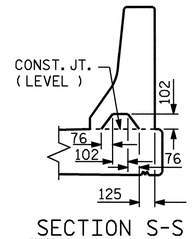

SECTION S-S

AT DAM IN OPEN JOINT
(THIS IS TO BE USED ONLY WHEN SLIP FORM IS USED)

BARRIER RAIL DETAILS

NOTES

THE BARRIER RAIL IN A CONTINUOUS UNIT SHALL NOT BE CAST UNTIL ALL SLAB CONCRETE IN THE UNIT HAS BEEN CAST AND HAS REACHED A MINIMUM COMPRESSIVE STRENGTH OF 20.7 MPa.

ALL REINFORCING STEEL IN BARRIER RAILS SHALL BE EPOXY COATED.

VERTICAL GROOVED CONTRACTION JOINTS, 12mm IN DEPTH, SHALL BE TOOLED IN ALL EXPOSED FACES OF THE BARRIER RAIL AND IN ACCORDANCE WITH ARTICLE 825-10(B) OF THE STANDARD SPECIFICATIONS. THE CONTRACTION JOINT SHALL BE LOCATED AT EACH THIRD POINT BETWEEN BARRIER RAIL EXPANSION JOINTS. ONLY ONE CONTRACTION JOINT IS REQUIRED AT MIDPOINT OF BARRIER RAIL SEGMENTS LESS THAN 6.1m IN LENGTH AND NO CONTRACTION JOINTS ARE REQUIRED FOR THOSE SEGMENTS LESS THAN 3.5m IN LENGTH.

THE #16 S1 & #16 S2 BARS MAY BE SHIFTED SLIGHTLY AS NECESSARY IN ORDER TO MAINTAIN 50mm CLEARANCE FROM THE 13mm EXPANSION JOINT MATERIAL IN THE BARRIER RAIL.

BAR TYPES

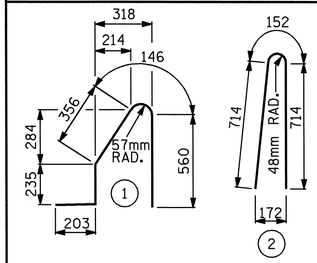

ALL BAR DIMENSIONS ARE OUT TO OUT

BILL OF MATERIAL

BAR	NO.	SIZE	TYPE	LENGTH	WEIGHT
✳B1	14	#16	STR	3840	83
✳B2	112	#16	STR	8900	1547
✳B3	14	#16	STR	7040	153
✳S1	554	#16	1	1500	1290
✳S2	554	#16	2	1580	1358
✳EPOXY COATED REINFORCING STEEL					4,431 kg
CLASS AA CONCRETE					41.7 CU. METER
CONCRETE BARRIER RAIL					166.180m

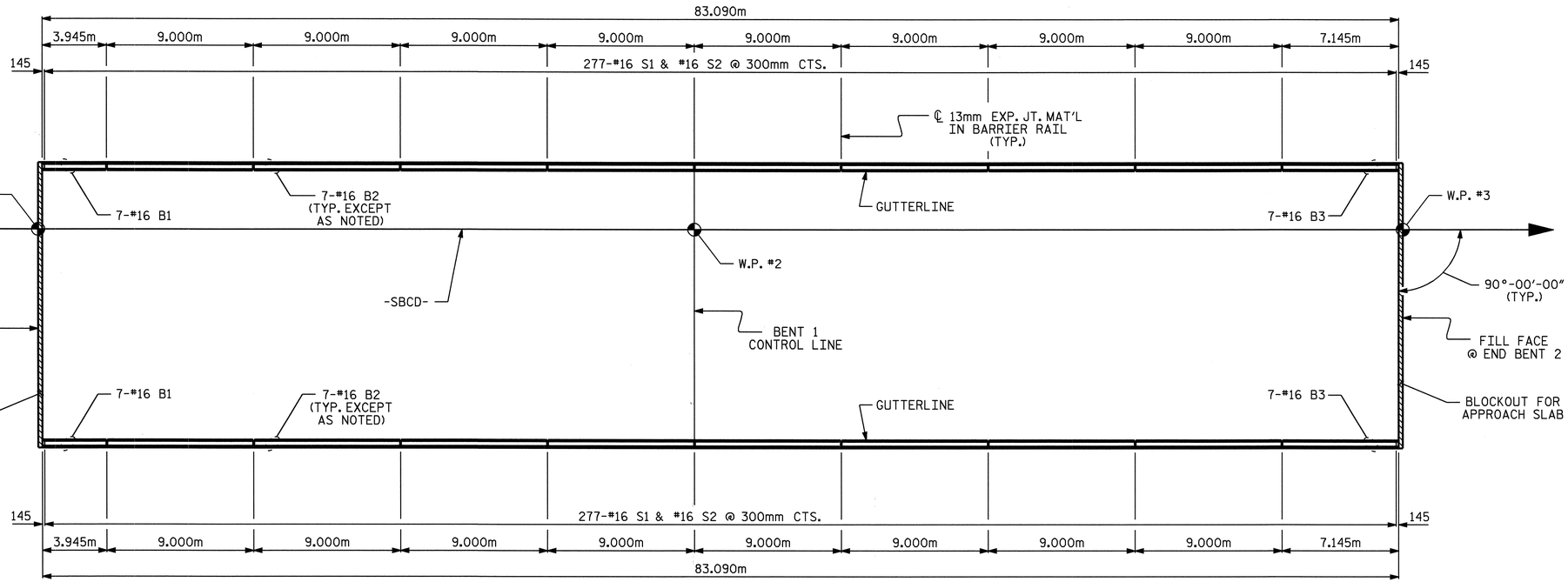

PLAN OF BARRIER RAIL

PROJECT NO. R-0609IA
GUILFORD COUNTY
STATION: 51+85.394 -L-

STATE OF NORTH CAROLINA
DEPARTMENT OF TRANSPORTATION
RALEIGH

SUPERSTRUCTURE

CONCRETE BARRIER RAIL

(SOUTHBOUND COLLECTOR)

NORTH CAROLINA PROFESSIONAL SEAL 23926 ENGINEER BRIAN C. HANKS
5/22/06

REVISIONS						SHEET NO.
NO.	BY:	DATE:	NO.	BY:	DATE:	S-125
1			3			TOTAL SHEETS
2			4			321

ASSEMBLED BY : D. G. ELY	DATE : 3/9/05	
CHECKED BY : A. B. NAIK	DATE : 4/27/05	
DRAWN BY : ARB 5/87	REV. 8/16/99	RWW/LES
CHECKED BY : SJD 9/87	REV. 10/17/00	RWW/LES
	REV. 5/7/03R	RWW/JTE

15-MAY-2006 15:54
G:\STRUCT~1\frye\FINAL_~1\Str4\R04DF0~1.DGN
dely

STD. No. CBR1SM

STR. #4

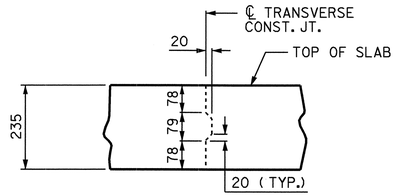

TRANSVERSE CONST. JT. DETAIL

NOTE: REINFORCING STEEL IN SLAB NOT SHOWN. LONGITUDINAL REINFORCING STEEL SHALL BE CONTINUOUS THRU JOINT.

SUPERSTRUCTURE REINFORCING STEEL LENGTHS ARE BASED ON THE FOLLOWING MINIMUM SPLICE LENGTHS					
BAR SIZE	SUPERSTRUCTURE EXCEPT APPROACH SLABS, PARAPET, AND BARRIER RAIL		APPROACH SLABS		PARAPET AND BARRIER RAIL
	EPOXY COATED	UNCOATED	EPOXY COATED	UNCOATED	
#13	610	540	610	540	840
#16	770	660	770	660	1050
#19	920	790	1190	790	1330
#22	1580	1060			
#25	2080	1390			

GROOVING BRIDGE FLOORS	
APPROACH SLABS	160.0m²
BRIDGE DECK	871.0m²
TOTAL	1,031.0m²

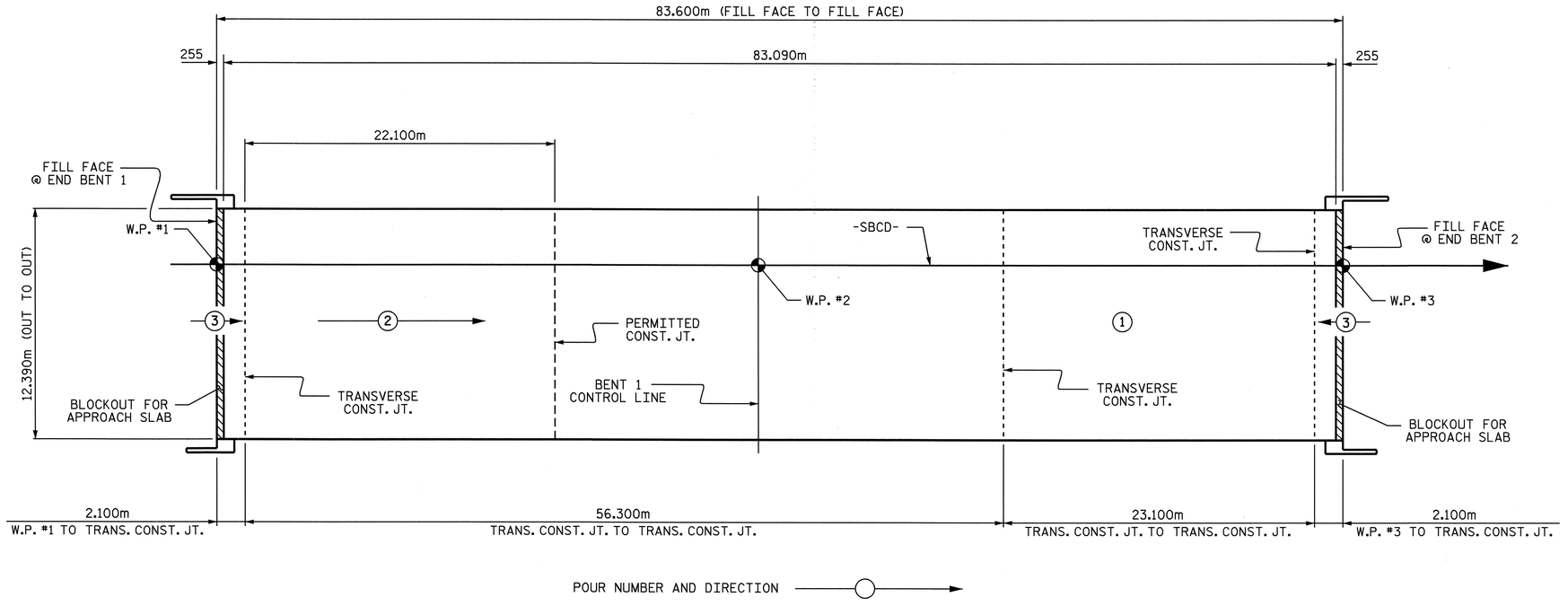

POURING SEQUENCE AND LAYOUT FOR COMPUTING AREA OF REINFORCED CONCRETE DECK SLAB (SQ. METER = 1,035.8)

BILL OF MATERIAL

BAR	NO.	SIZE	TYPE	LENGTH	WEIGHT
* A1	554	16	STR	12280	10558
A2	554	16	STR	12280	10558
* B1	78	13	STR	8920	692
* B2	153	22	STR	11060	5148
* B3	104	13	STR	7640	790
* B4	20	13	STR	8860	176
B5	250	16	STR	17140	6650
* D1	102	22	STR	10000	3103
H1	28	25	4	4540	505
H2	14	25	4	4080	227
H3	14	25	4	5060	281
K1	24	16	STR	14300	533
K2	8	16	STR	900	11
* S1	72	13	1	3520	252
* S2	72	13	2	2500	179
U1	72	16	3	4500	503
V1	44	19	STR	2140	210
V2	16	16	STR	2140	53
V3	44	19	STR	2160	212
V4	16	16	STR	2160	54

REINFORCING STEEL 19,797 kg

* EPOXY COATED REINFORCING STEEL 20,898 kg

BAR TYPES

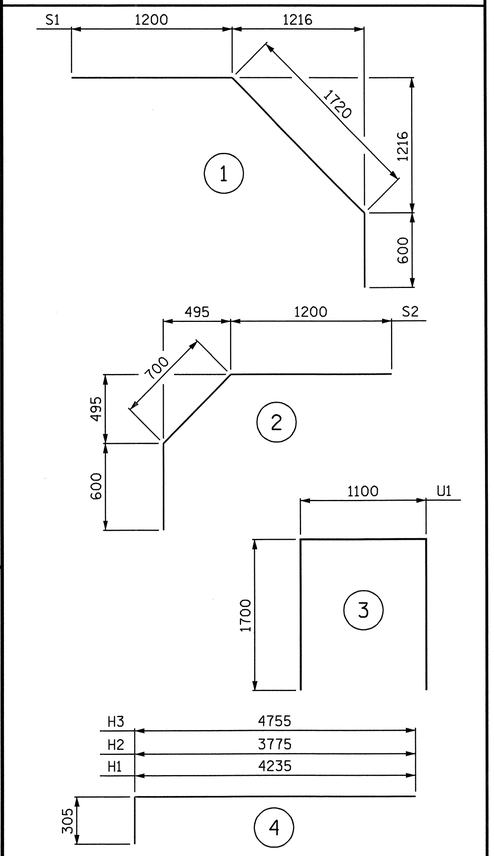

ALL BAR DIMENSIONS ARE OUT TO OUT.

SUPERSTRUCTURE BILL OF MATERIAL

SOUTHBOUND COLLECTOR	CLASS AA CONCRETE	REINFORCING STEEL	EPOXY COATED REINFORCING STEEL
	(m3)	(kg)	(kg)
SPANS "A" & "B"		19,797	20,898
POUR #1	79.7		
POUR #2	192.1		
POUR #3	92.0		
TOTALS	363.8	19,797	20,898

PROJECT NO. R-0609IA

GUILFORD COUNTY

STATION: 51+85.394 -L-

STATE OF NORTH CAROLINA
DEPARTMENT OF TRANSPORTATION
RALEIGH

SUPERSTRUCTURE

BILL OF MATERIAL

(SOUTHBOUND COLLECTOR)

NORTH CAROLINA PROFESSIONAL SEAL 23926 ENGINEER BRIAN C. HANKS
11/9/06

REVISIONS						SHEET NO.
NO.	BY:	DATE:	NO.	BY:	DATE:	S-126
1			3			TOTAL SHEETS
2			4			321

DRAWN BY : D. G. ELY DATE : 3/10/05
CHECKED BY : A. B. NAIK DATE : 4/27/05

09-NOV-2006 13:54
R:\Structures\frye\FINAL_PLANS\Str4\R0609IA_sd_BM_STR.*4.dgn
bhanks

STR. #4

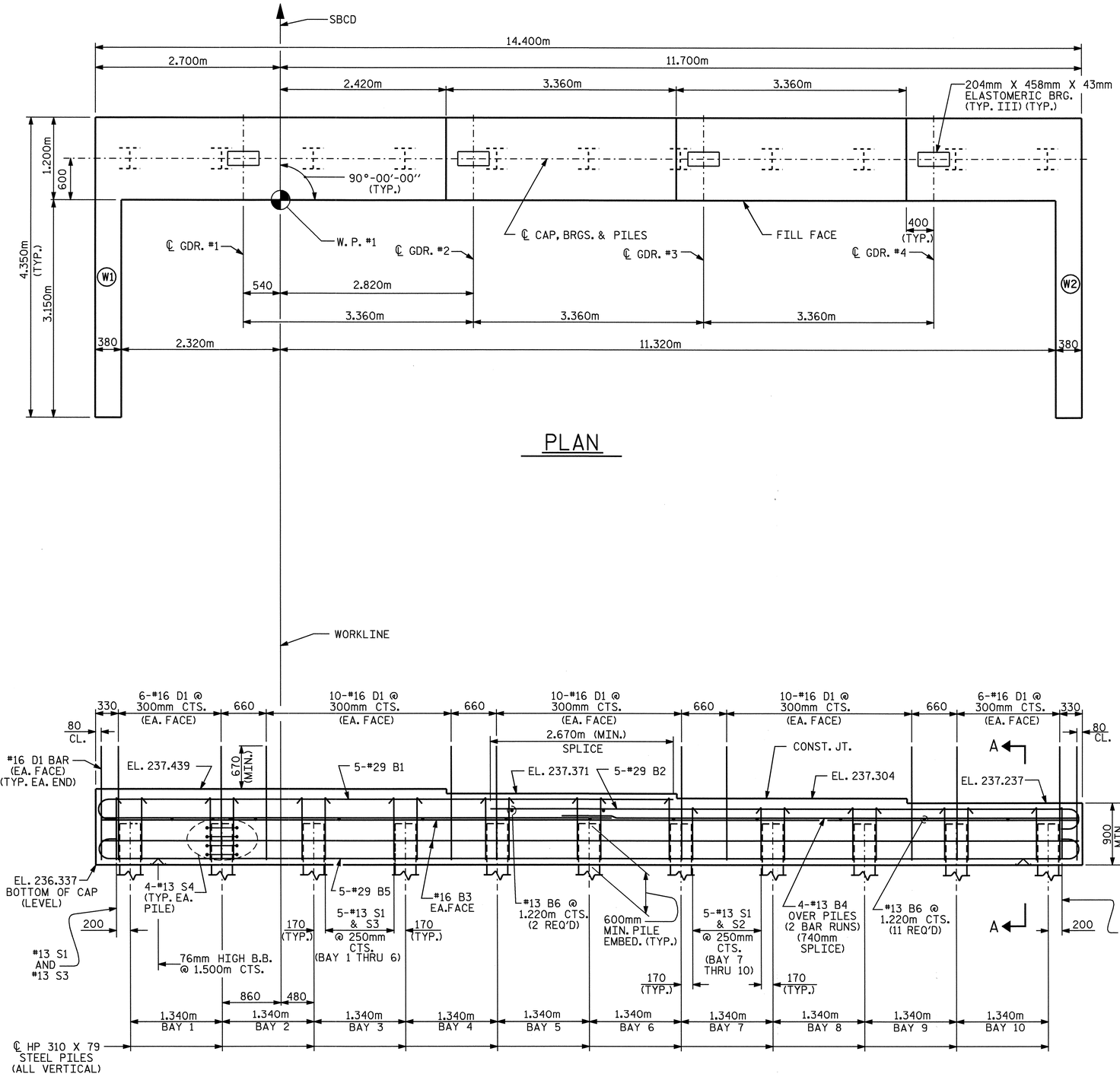

PLAN

ELEVATION

(WINGS NOT SHOWN FOR CLARITY)
(FOR WING REINFORCING STEEL AND DETAILS, SEE SHEET 2 OF 2)

NOTES:

FOR PILE SPLICE DETAILS, SEE SHEET 2 OF 2.

FOR TEMPORARY DRAINAGE DETAILS, SEE SHEET 2 OF 2.

THE CONTRACTOR SHALL PROVIDE FOR INSTALLATION OF THE 102mm DIAMETER DRAIN PIPE THROUGH THE WING WALL AS REQUIRED FOR REINFORCED BRIDGE APPROACH FILLS. SEE THE ROADWAY PLANS. REINFORCING STEEL IN THE WING WALL MAY BE SHIFTED AS NECESSARY TO CLEAR THE DRAIN PIPE.

THE TOP SURFACE OF THE END BENT CAP AND WINGS, EXCLUDING THE OUTSIDE 4" AND THE BEARING AREA, SHALL BE RAKED TO A DEPTH OF 1/4".

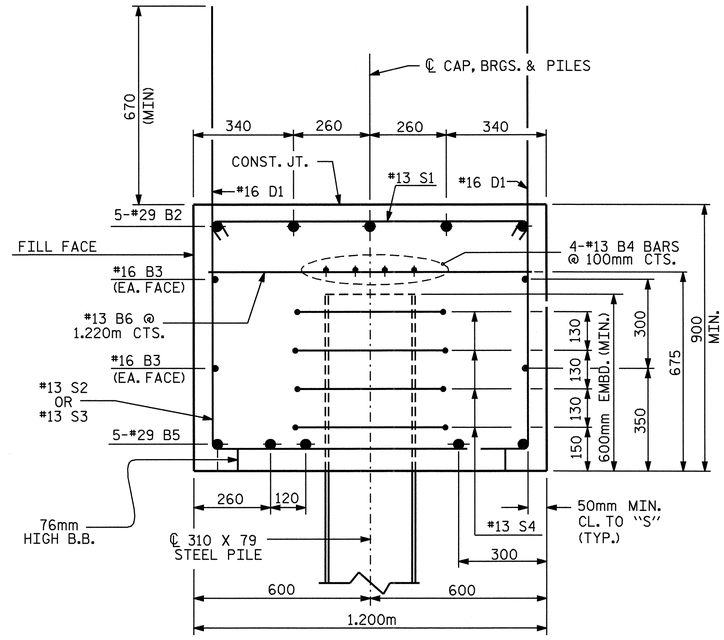

SECTION A-A

PROJECT NO. R-0609IA

GUILFORD COUNTY

STATION: 51+85.394 -L-

SHEET 1 OF 2

STATE OF NORTH CAROLINA
DEPARTMENT OF TRANSPORTATION
RALEIGH

SUBSTRUCTURE
END BENT 1

NORTH CAROLINA PROFESSIONAL SEAL 23926 ENGINEER BRIAN C. HANKS
5/22/06

REVISIONS						SHEET NO.
NO.	BY:	DATE:	NO.	BY:	DATE:	S-127
1			3			TOTAL SHEETS
2			4			321

STR. #4

DRAWN BY : QT NGUYEN DATE : 02-05
CHECKED BY : RW WRIGHT DATE : 3-05

15-MAY-2006 15:53
G:\STRUCT~1\frye\FINAL_~1\Str4\ROB820~1.DGN
dely

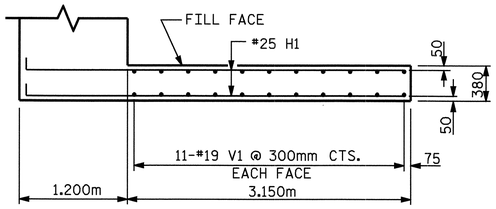

PLAN OF WING W1

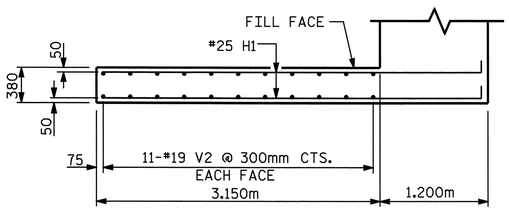

PLAN OF WING W2

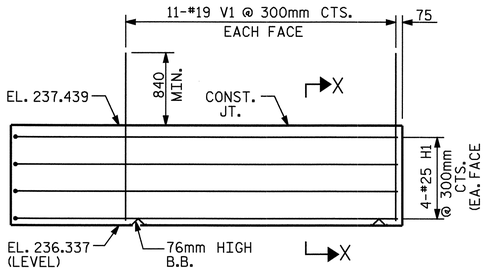

ELEVATION OF WING W1

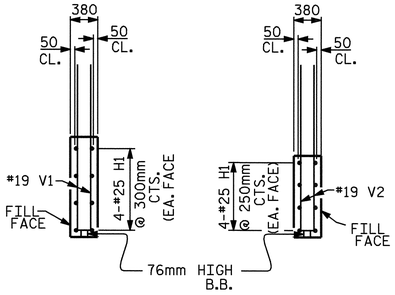

SECTION X-X

SECTION Y-Y

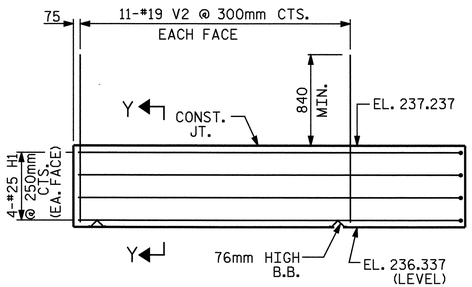

ELEVATION OF WING W2

BAR TYPES

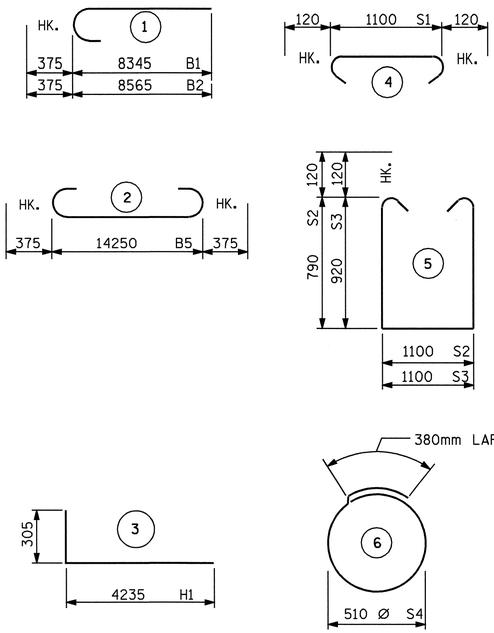

ALL BAR DIMENSIONS ARE OUT TO OUT.

BILL OF MATERIAL
END BENT 1

BAR	NO.	SIZE	TYPE	LENGTH	WEIGHT
B1	5	#29	1	8720	221
B2	5	#29	1	8940	226
B3	4	#16	STR	14300	89
B4	8	#13	STR	7520	60
B5	5	#29	2	15000	379
B6	13	#13	STR	1100	14
D1	88	#16	STR	1700	232
H1	16	#25	3	4540	289
S1	52	#13	4	1340	69
S2	21	#13	5	2920	61
S3	31	#13	5	3180	98
S4	44	#13	6	1980	87
V1	22	#19	STR	1880	92
V2	22	#19	STR	1680	83

REINFORCING STEEL = 2000 KG

CLASS A CONCRETE BREAKDOWN

CAP & LOWER WINGS 20.0 M3

TOTAL CONCRETE 20.0 M3

HP 310 X 79 STEEL PILES
NO. 11 71.5 METERS

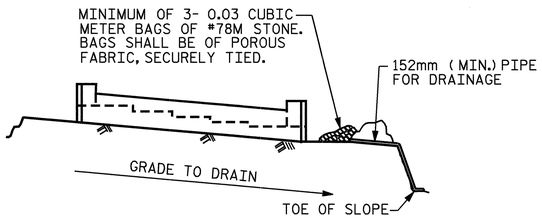

BAGGED STONE AND PIPE SHALL BE PLACED IMMEDIATELY AFTER COMPLETION OF END BENT EXCAVATION. PIPE MAY BE EITHER CONCRETE, CORRUGATED STEEL, CORRUGATED ALUMINUM ALLOY, OR CORRUGATED PLASTIC. PERFORATED PIPE WILL NOT BE ALLOWED.

BAGGED STONE SHALL REMAIN IN PLACE UNTIL THE ENGINEER DIRECTS THAT IT BE REMOVED. THE CONTRACTOR SHALL REMOVE AND DISPOSE OF SILT ACCUMULATIONS AT BAGGED STONE WHEN SO DIRECTED BY THE ENGINEER. BAGS SHALL BE REMOVED AND REPLACED WHENEVER THE ENGINEER DETERMINES THAT THEY HAVE DETERIORATED AND LOST THEIR EFFECTIVENESS.

NO SEPARATE PAYMENT WILL BE MADE FOR THIS WORK AND THE ENTIRE COST OF THIS WORK SHALL BE INCLUDED IN THE UNIT CONTRACT PRICE BID FOR THE SEVERAL PAY ITEMS.

TEMPORARY DRAINAGE AT END BENT

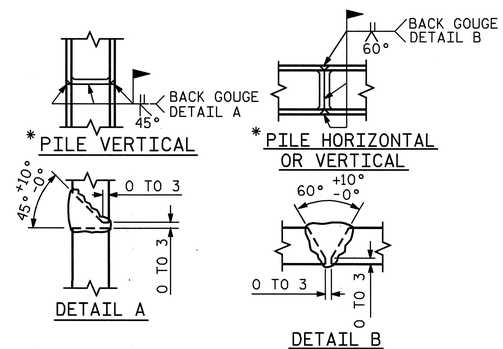

* POSITION OF PILE DURING WELDING.

PILE SPLICE DETAILS

PROJECT NO. R-0609IA
GUILFORD COUNTY
STATION: 51+85.394 -L-

SHEET 2 OF 2

STATE OF NORTH CAROLINA
DEPARTMENT OF TRANSPORTATION
RALEIGH

SUBSTRUCTURE
END BENT 1

REVISIONS						SHEET NO.
NO.	BY:	DATE:	NO.	BY:	DATE:	S-128
1			3			TOTAL SHEETS
2			4			321

NORTH CAROLINA PROFESSIONAL SEAL 23926 ENGINEER BRIAN C. HANKS
5/22/06

DRAWN BY : QT NGUYEN DATE : 02-05
CHECKED BY : RW WRIGHT DATE : 3-05

15-MAY-2006 15:53
G:\STRUCT~1\frye\FINAL_~1\Str4\ROB820~1.DGN
dely

STR. #4

G:\STRUCTØ1\fryØ\FINAL_Ø1\Str4\R0609IØØ.DGN
dely

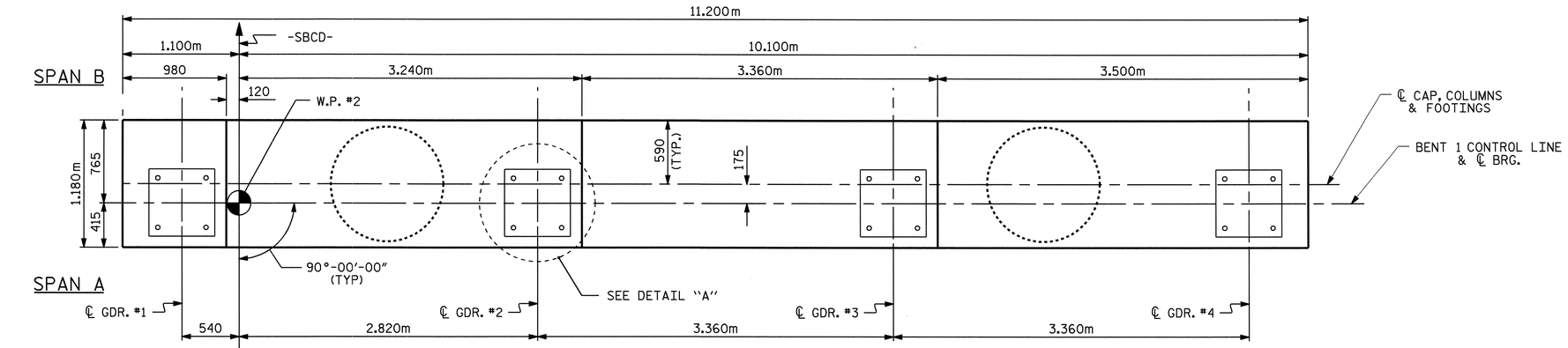

PLAN

NOTES

STIRRUPS IN CAP MAY BE SHIFTED AS NECESSARY TO CLEAR ANCHOR BOLTS.

HOOKS ON "V1" BARS MAY BE TURNED AS NECESSARY FOR PLACING REINFORCING STEEL.

THE CONTRACTOR'S ATTENTION IS CALLED TO THE FACT THAT THE "M1" IS DETAILED WITH ONE METER OF EXTRA LENGTH.

THE CONTRACTOR'S ATTENTION IS CALLED TO THE FACT THAT THE CENTERLINE OF CAP, COLUMN & FOOTINGS IS OFFSET FROM THE CONTROL LINE OF BENT.

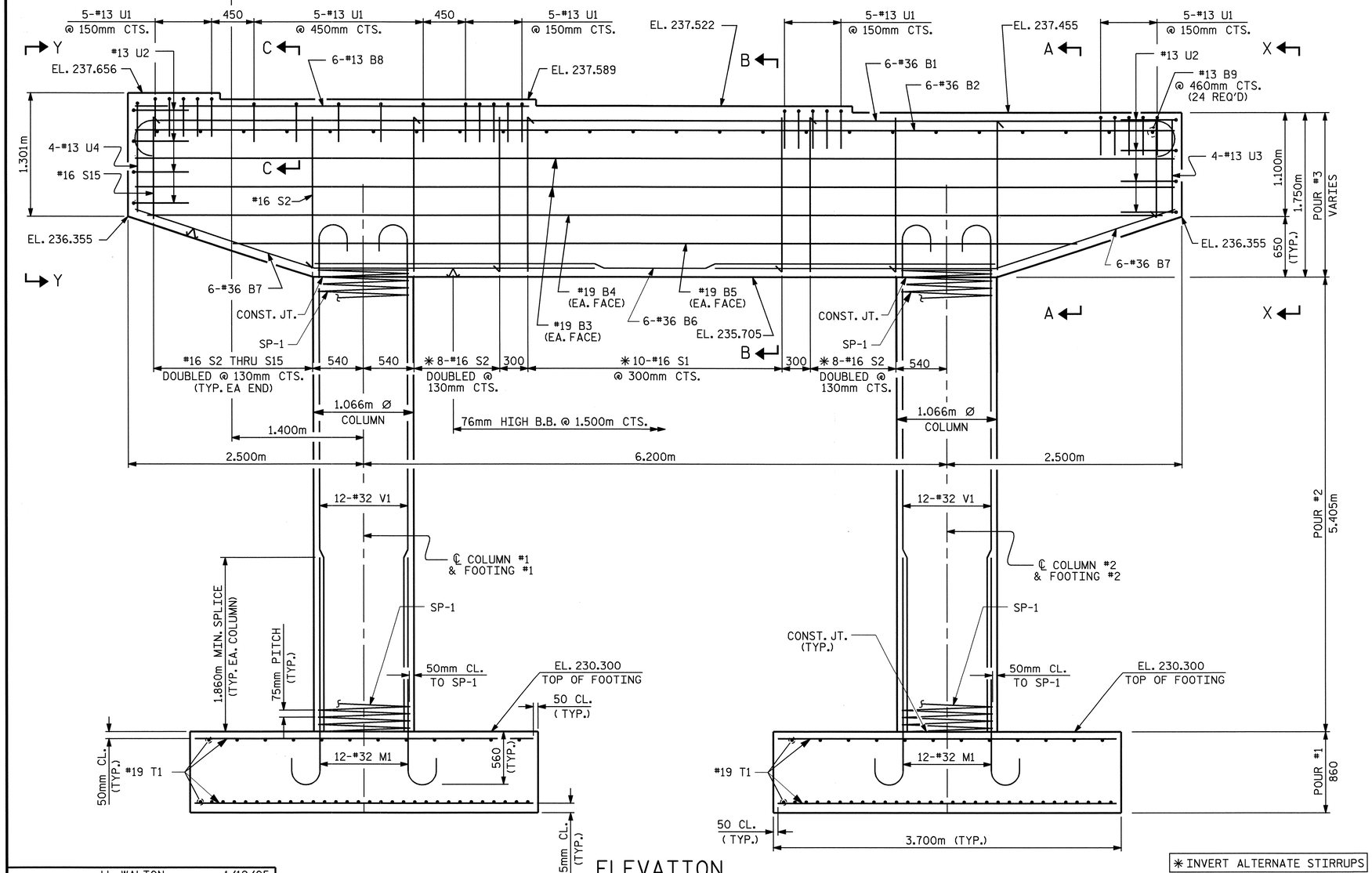

ELEVATION

✳INVERT ALTERNATE STIRRUPS

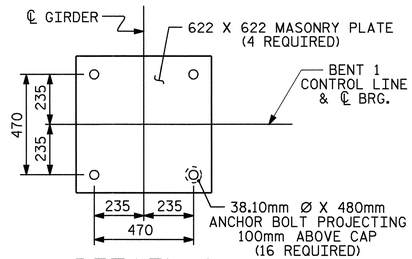

DETAIL A

PROJECT NO. R-0609IA
GUILFORD COUNTY
STATION: 51+85.394 -L-

SHEET 1 OF 2

STATE OF NORTH CAROLINA
DEPARTMENT OF TRANSPORTATION
RALEIGH

SUBSTRUCTURE
BENT 1

REVISIONS						SHEET NO.
NO.	BY:	DATE:	NO.	BY:	DATE:	S-129
1			3			TOTAL SHEETS
2			4			321

DRAWN BY : J.L. WALTON DATE : 1/19/05
CHECKED BY : R. W. WRIGHT DATE : 3/05

NORTH CAROLINA PROFESSIONAL SEAL 23926 ENGINEER BRIAN C. HAWKS
5/22/06

STR. #4

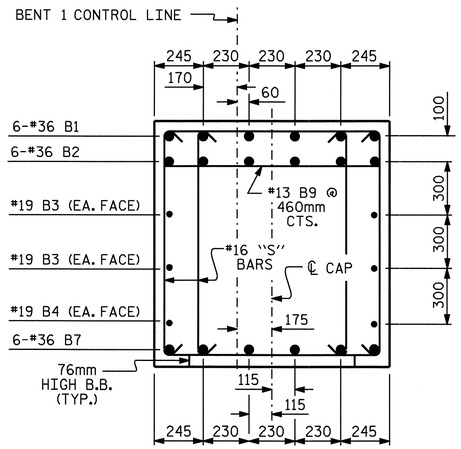

SECTION A-A

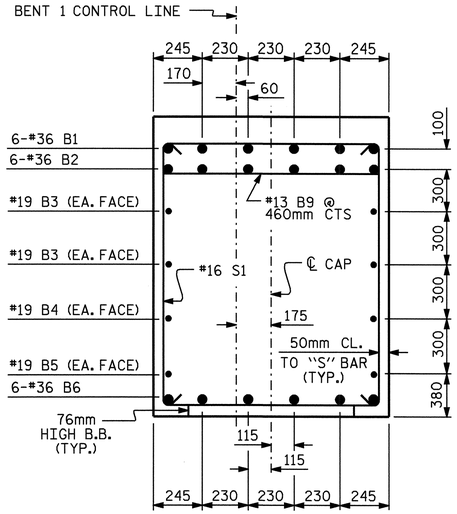

SECTION B-B

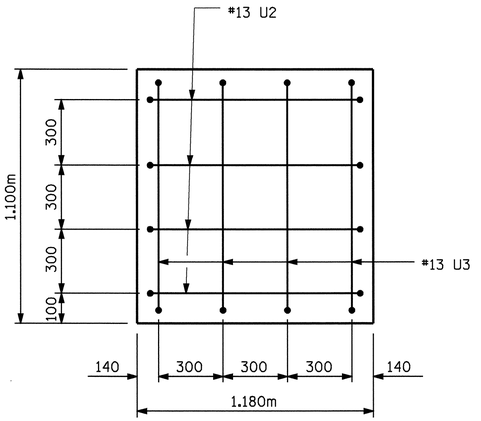

VIEW X-X

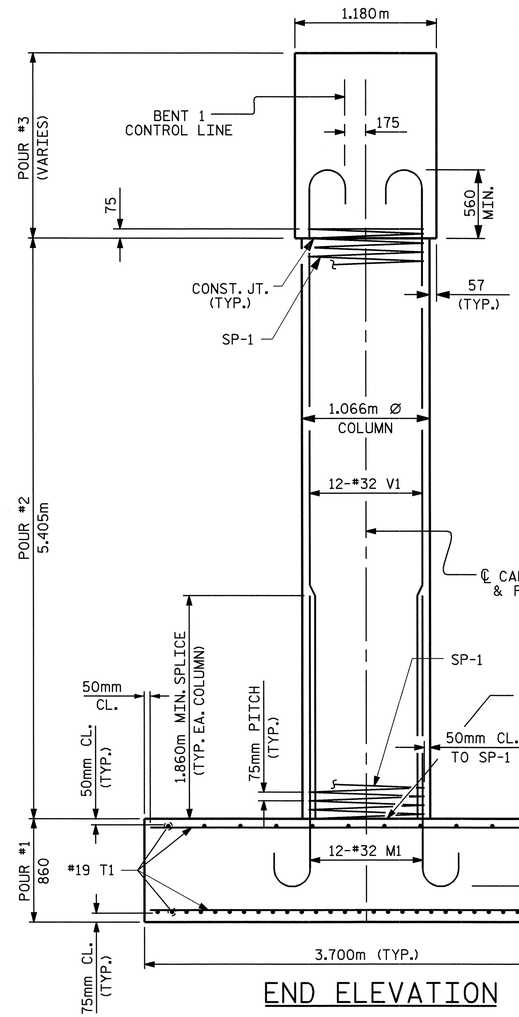

END ELEVATION

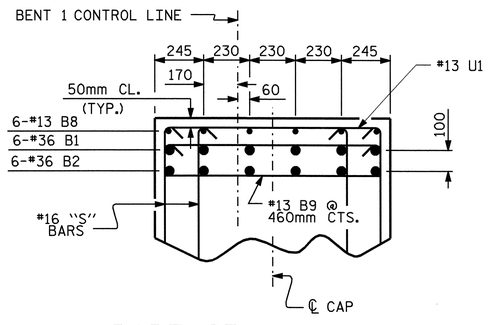

PART SECTION C-C

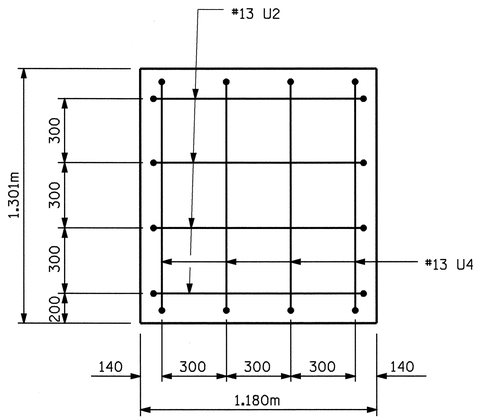

VIEW Y-Y

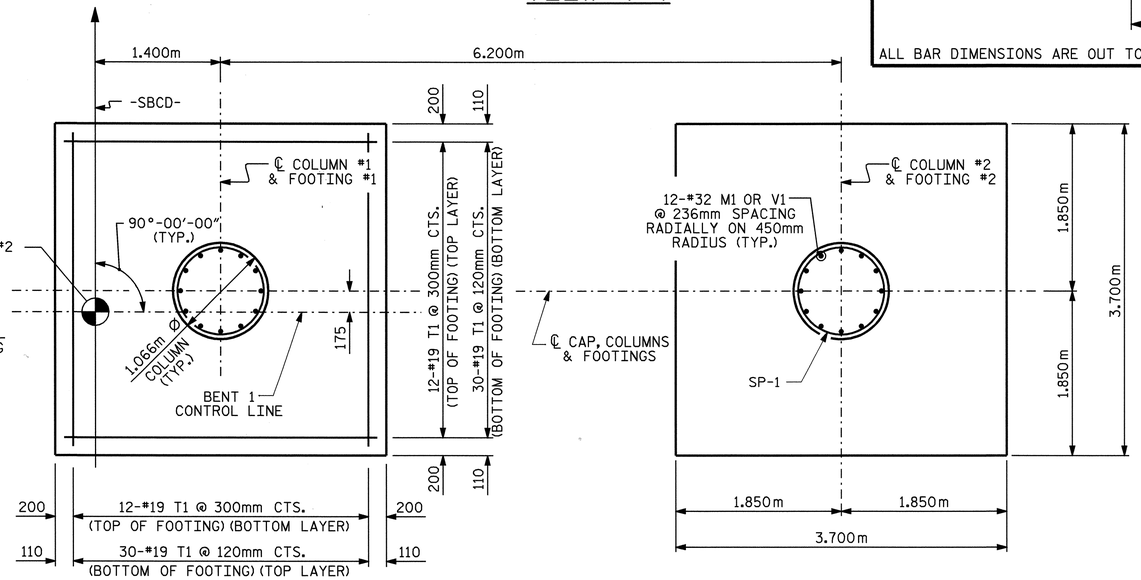

PLAN OF FOOTINGS & COLUMNS

DIMENSIONS AND REINFORCING ARE TYPICAL EACH COLUMN & FOOTING

BAR TYPES

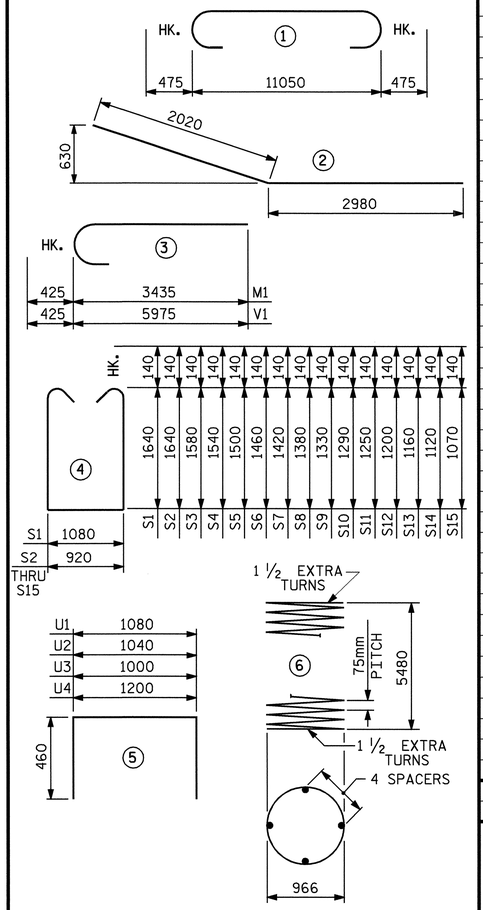

ALL BAR DIMENSIONS ARE OUT TO OUT.

BILL OF MATERIAL BENT 1

BAR	NO.	SIZE	TYPE	LENGTH	WEIGHT
B1	6	#36	1	12000	569
B2	6	#36	STR	11100	527
B3	4	#19	STR	11100	99
B4	2	#19	STR	10880	49
B5	2	#19	STR	9080	41
B6	6	#36	STR	7260	344
B7	12	#36	2	5000	474
B8	6	#13	STR	4240	25
B9	24	#13	STR	1080	26
M1	24	#32	3	3860	593
S1	10	#16	4	4640	72
S2	36	#16	4	4480	250
S3	4	#16	4	4360	27
S4	4	#16	4	4280	27
S5	4	#16	4	4200	26
S6	4	#16	4	4120	26
S7	4	#16	4	4040	25
S8	4	#16	4	3960	25
S9	4	#16	4	3860	24
S10	4	#16	4	3780	23
S11	4	#16	4	3700	23
S12	4	#16	4	3600	22
S13	4	#16	4	3520	22
S14	4	#16	4	3440	21
S15	4	#16	4	3340	21
T1	168	#19	STR	3600	1352
V1	24	#32	3	6400	984
U1	25	#13	5	2000	50
U2	8	#13	5	1960	16
U3	4	#13	5	1920	8
U4	4	#13	5	2120	8
REINFORCING STEEL				KG.	5799
SP-1	2	✻✻	6	227700	453
SPIRAL COLUMN REINFORCING STEEL				KG.	453

CLASS "A" CONCRETE		
POUR #1 (FOOTINGS)	M³	23.5
POUR #2 (COLUMNS)	M³	9.6
POUR #3 (CAP)	M³	22.6
TOTAL CONCRETE	M³	55.7

✻✻ THE SP-1 SPIRAL REINFORCING STEEL SHALL BE W-20 OR D-20 COLD DRAWN WIRE OR #13 PLAIN OR DEFORMED BAR.

FOUNDATION EXCAVATION LUMP SUM

PROJECT NO. R-0609IA

GUILFORD COUNTY

STATION: 51+85.394 -L-

SHEET 2 OF 2

STATE OF NORTH CAROLINA
DEPARTMENT OF TRANSPORTATION
RALEIGH

SUBSTRUCTURE
BENT 1

REVISIONS						SHEET NO.
NO.	BY:	DATE:	NO.	BY:	DATE:	S-130
1			3			TOTAL SHEETS
2			4			321

NORTH CAROLINA PROFESSIONAL SEAL 23926 ENGINEER BRIAN C. HAWKS
3/22/06

DRAWN BY : J.L. WALTON DATE : 1/19/05
CHECKED BY : R. W. WRIGHT DATE : 3/05

15-MAY-2006 15:52
G:\STRUCT~1\frye\FINAL_~1\Str4\R0609I~3.DGN
dely

STR. #4

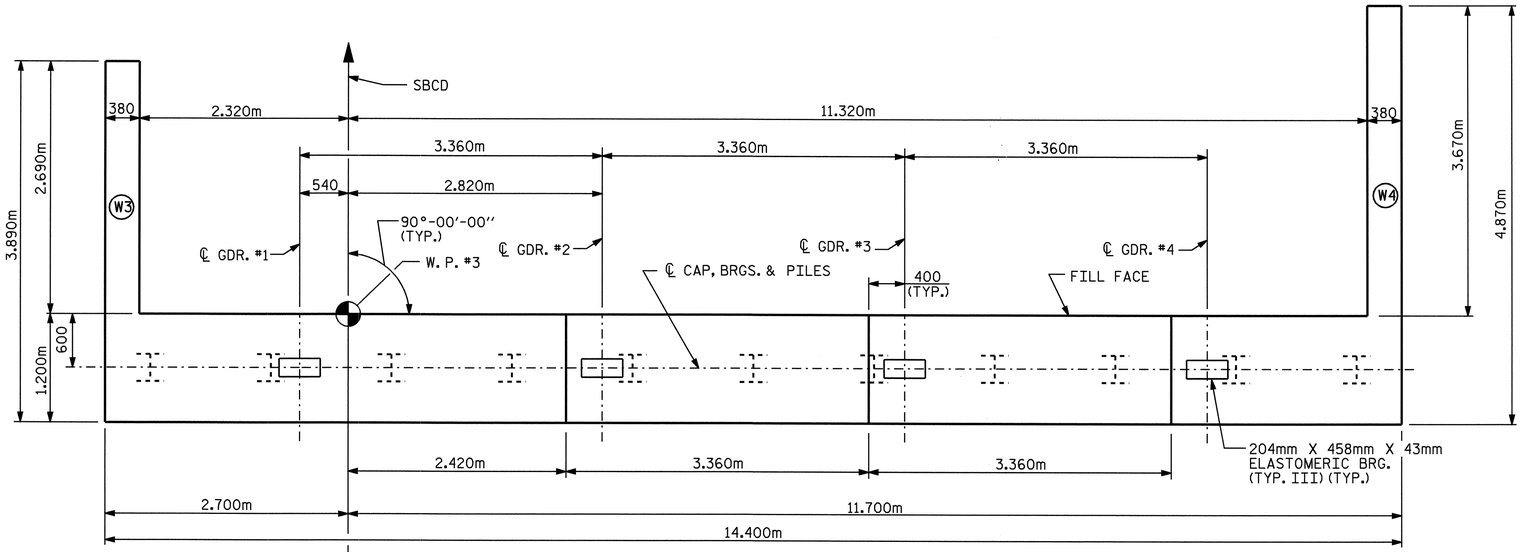

PLAN

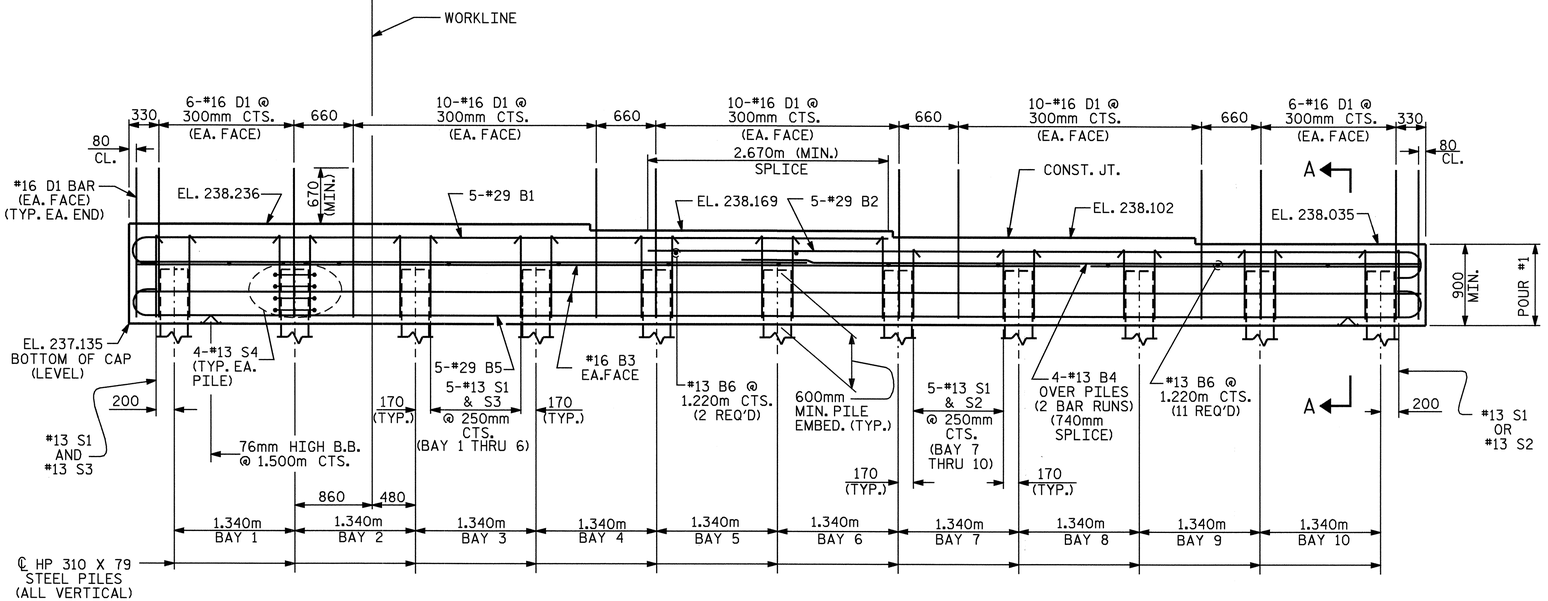

ELEVATION

(WINGS NOT SHOWN FOR CLARITY)
(FOR WING REINFORCING STEEL AND DETAILS, SEE SHEET 2 OF 2)

NOTES:

FOR PILE SPLICE DETAILS, SEE SHEET 2 OF 2.

FOR TEMPORARY DRAINAGE DETAILS, SEE SHEET 2 OF 2.

THE CONTRACTOR SHALL PROVIDE FOR INSTALLATION OF THE 102mm DIAMETER DRAIN PIPE THROUGH THE WING WALL AS REQUIRED FOR REINFORCED BRIDGE APPROACH FILLS, SEE THE ROADWAY PLANS. REINFORCING STEEL IN THE WING WALL MAY BE SHIFTED AS NECESSARY TO CLEAR THE DRAIN PIPE.

THE TOP SURFACE OF THE END BENT CAP AND WINGS, EXCLUDING THE OUTSIDE 4" AND THE BEARING AREA, SHALL BE RAKED TO A DEPTH OF 1/4".

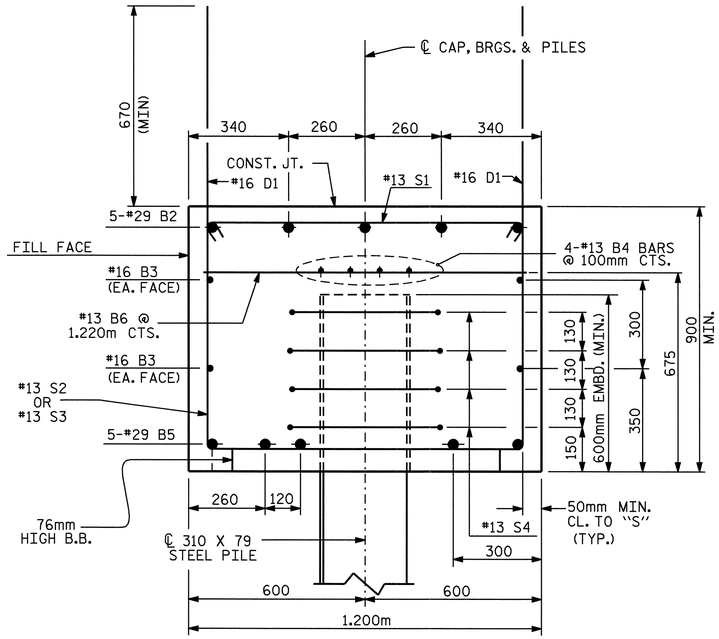

SECTION A-A

PROJECT NO. R-0609IA

GUILFORD COUNTY

STATION: 51+85.394 -L-

SHEET 1 OF 2

STATE OF NORTH CAROLINA
DEPARTMENT OF TRANSPORTATION
RALEIGH

SUBSTRUCTURE
END BENT 2

NORTH CAROLINA PROFESSIONAL SEAL 23926 ENGINEER BRIAN C. HAWKINS
5/22/06

REVISIONS						SHEET NO.
NO.	BY:	DATE:	NO.	BY:	DATE:	S-131
1			3			TOTAL SHEETS
2			4			321

DRAWN BY : QT NGUYEN DATE : 02-05
CHECKED BY : RW WRIGHT DATE : 3-05

15-MAY-2006 15:51
G:\STRUCT~1\frye\FINAL_~1\Str4\ROB820~1.DGN
dely

STR. #4

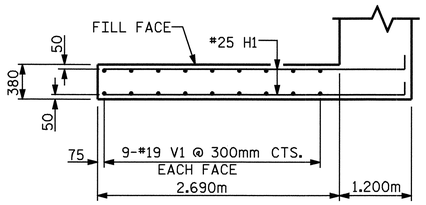

PLAN OF WING W3

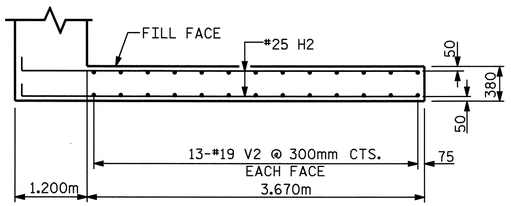

PLAN OF WING W4

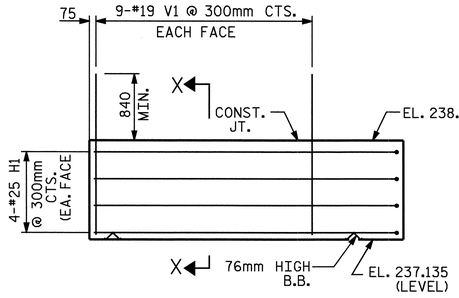

ELEVATION OF WING W3

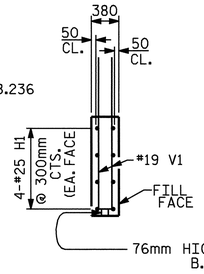

SECTION X-X

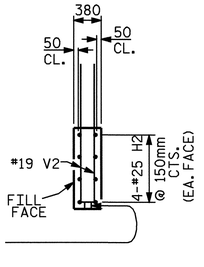

SECTION Y-Y

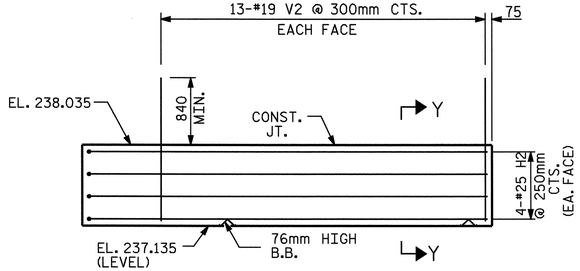

ELEVATION OF WING W4

BAR TYPES

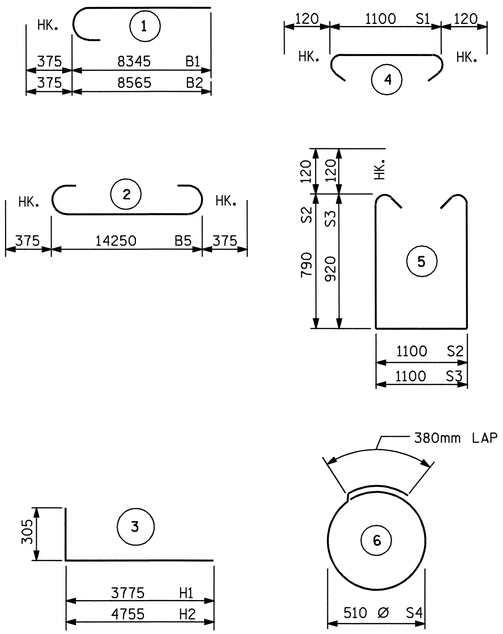

ALL BAR DIMENSIONS ARE OUT TO OUT.

BILL OF MATERIAL
END BENT 2

BAR	NO.	SIZE	TYPE	LENGTH	WEIGHT
B1	5	#29	1	8720	221
B2	5	#29	1	8940	226
B3	4	#16	STR	14300	89
B4	8	#13	STR	7520	60
B5	5	#29	2	15000	379
B6	13	#13	STR	1100	14
D1	88	#16	STR	1700	232
H1	8	#25	3	4080	130
H2	8	#25	3	5060	161
S1	52	#13	4	1340	69
S2	21	#13	5	2920	61
S3	31	#13	5	3180	98
S4	44	#13	6	1980	87
V1	18	#19	STR	1880	76
V2	26	#19	STR	1680	98

REINFORCING STEEL = 2001 KG

CLASS A CONCRETE BREAKDOWN
CAP & LOWER WINGS 20.0 M3
TOTAL CONCRETE 20.0 M3

PILE EXCAVATION IN SOIL 49.8 METERS
PILE EXCAVATION NOT IN SOIL 8.5 METERS

HP 310 X 79 STEEL PILES
NO. 11 58.3 METERS

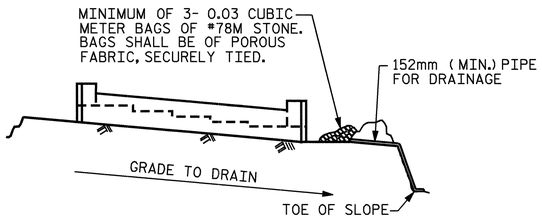

BAGGED STONE AND PIPE SHALL BE PLACED IMMEDIATELY AFTER COMPLETION OF END BENT EXCAVATION. PIPE MAY BE EITHER CONCRETE, CORRUGATED STEEL, CORRUGATED ALUMINUM ALLOY, OR CORRUGATED PLASTIC. PERFORATED PIPE WILL NOT BE ALLOWED.

BAGGED STONE SHALL REMAIN IN PLACE UNTIL THE ENGINEER DIRECTS THAT IT BE REMOVED. THE CONTRACTOR SHALL REMOVE AND DISPOSE OF SILT ACCUMULATIONS AT BAGGED STONE WHEN SO DIRECTED BY THE ENGINEER. BAGS SHALL BE REMOVED AND REPLACED WHENEVER THE ENGINEER DETERMINES THAT THEY HAVE DETERIORATED AND LOST THEIR EFFECTIVENESS.

NO SEPARATE PAYMENT WILL BE MADE FOR THIS WORK AND THE ENTIRE COST OF THIS WORK SHALL BE INCLUDED IN THE UNIT CONTRACT PRICE BID FOR THE SEVERAL PAY ITEMS.

TEMPORARY DRAINAGE AT END BENT

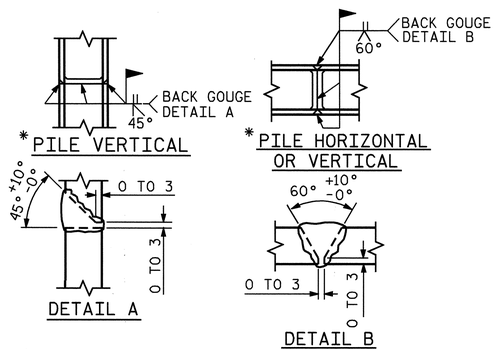

* POSITION OF PILE DURING WELDING.

PILE SPLICE DETAILS

PROJECT NO. R-0609IA
GUILFORD COUNTY
STATION: 51+85.394 -L-

SHEET 2 OF 2

STATE OF NORTH CAROLINA
DEPARTMENT OF TRANSPORTATION
RALEIGH

SUBSTRUCTURE
END BENT 2

NORTH CAROLINA PROFESSIONAL SEAL 23926 ENGINEER BRIAN C. HANKS
5/22/06

REVISIONS						SHEET NO.
NO.	BY:	DATE:	NO.	BY:	DATE:	S-132
1			3			TOTAL SHEETS
2			4			321

DRAWN BY : QT NGUYEN DATE : 02-05
CHECKED BY : RW WRIGHT DATE : 3-05

15-MAY-2006 15:51
G:\STRUCT~1\frye\FINAL_~1\Str4\ROB820~1.DGN
dely

STR. #4

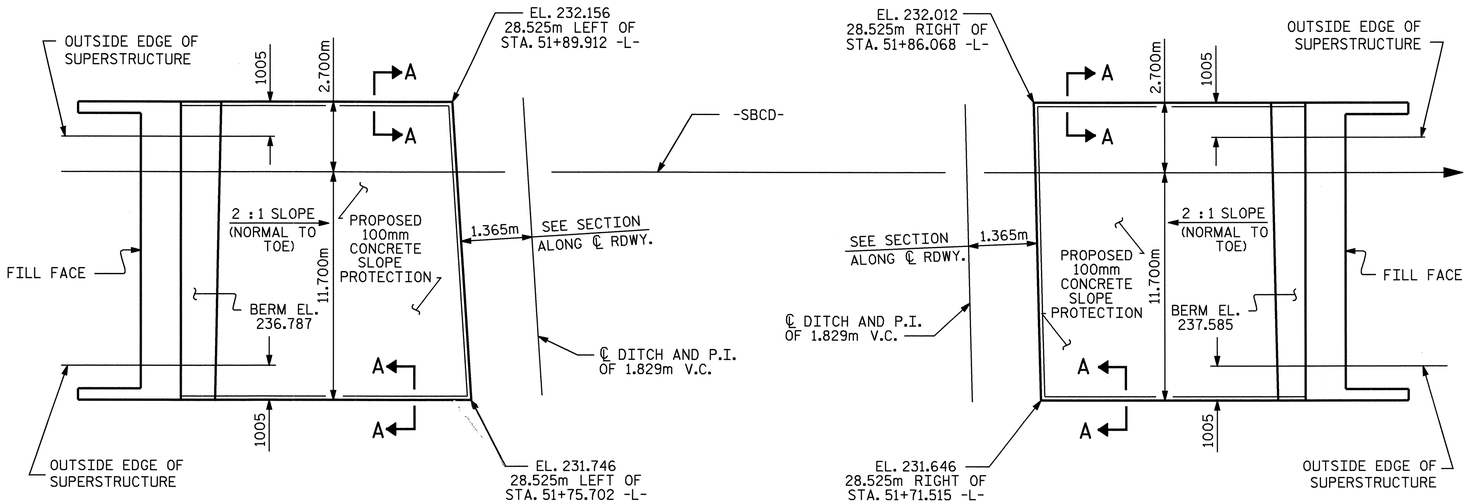

PLAN OF SLOPE PROTECTION

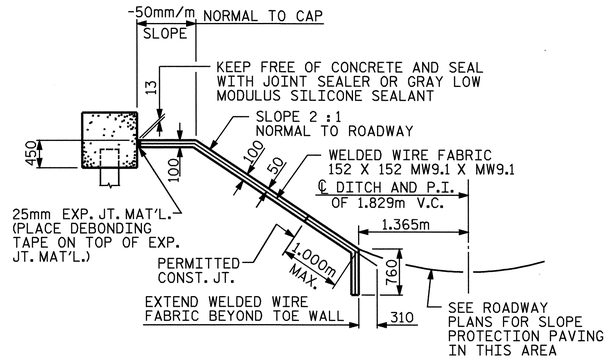

SECTION ALONG ℄ ROADWAY WHEN FILL CATCHES IN DITCH

NOTES

SLOPE PROTECTION SHALL BE PLACED UNDER THE ENDS OF THE BRIDGE AS SHOWN IN THE DETAILS. METHOD OF MEASUREMENT AND BASIS OF PAYMENT SHALL BE AS PRESCRIBED IN SECTION 462 OF THE STANDARD SPECIFICATIONS. FOR BERM WIDTH, SEE GENERAL DRAWING.

SLOPE PROTECTION SHALL CONSIST OF 100mm POURED-IN-PLACE CONCRETE PAVING AS SHOWN IN THE DETAILS ON THIS SHEET. CONCRETE SHALL BE CLASS "B". THE CONCRETE SURFACE SHALL BE FLOATED WITH A WOODEN FLOAT AND FINISHED. WELDED WIRE FABRIC REINFORCING SHALL BE 152 X 152 - W9.1 X W9.1, 1520mm WIDE. SLOPE PROTECTION SHALL BE POURED IN 1520mm STRIPS AS SHOWN IN THE "POURING DETAIL" WITH 600mm LONG #13 BARS PLACED ALONG THE SLOPE BETWEEN STRIPS AT 450mm MAXIMUM SPACING. SLOPE PROTECTION MAY BE POURED IN ALTERNATE 1220mm AND 1520mm STRIPS AS SHOWN IN THE "OPTIONAL POURING DETAIL" WITH ADJACENT RUNS OF WELDED WIRE FABRIC LAPPING AT LEAST 152mm. THE COST OF THE WELDED WIRE FABRIC AND #13 BARS, IF USED, SHALL BE INCLUDED IN THE CONTRACT UNIT PRICE BID PER SQUARE METER FOR SLOPE PROTECTION.

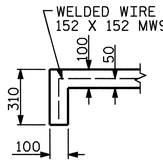

SECTION A-A

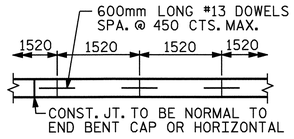

STRIP WIDTHS MAY VARY IN CURVED PORTION.

POURING DETAIL

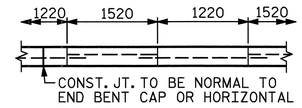

POUR A 1220mm STRIP FIRST. STRIP WIDTHS MAY VARY IN CURVED PORTION.

OPTIONAL POURING DETAIL

BRIDGE @ STA. 51+85.394 -L-	100mm SLOPE PROTECTION	* WELDED WIRE FABRIC 1520mm WIDE
	SQUARE METERS	APPROX. METERS
END BENT 1	185	160
END BENT 2	235	200

* QUANTITY SHOWN IS BASED ON 1520mm POURS.

PROJECT NO. R-0609IA

GUILFORD COUNTY

STATION: 51+85.394 -L-

STATE OF NORTH CAROLINA
DEPARTMENT OF TRANSPORTATION
RALEIGH

STANDARD SLOPE PROTECTION DETAILS

NORTH CAROLINA PROFESSIONAL SEAL 23926 ENGINEER BRIAN C. HANKS
5/22/06

REVISIONS						SHEET NO.
NO.	BY:	DATE:	NO.	BY:	DATE:	S-133
1			3			TOTAL SHEETS
2			4			321

ASSEMBLED BY : J.L. WALTON		DATE : 10/7/04	
CHECKED BY : D.G. ELY		DATE : 11/12/04	
DRAWN BY : ELR 5/92	REV. 10/17/00	RWW/LES	
CHECKED BY : GRP 6/92	REV. 7/10/01	LES/RDR	
	REV. 5/7/03	RWW/JTE	

15-MAY-2006 15:51
G:\STRUCT-1\frye\FINAL_~1\Str4\R002E1~1.DGN
dely

STR #4

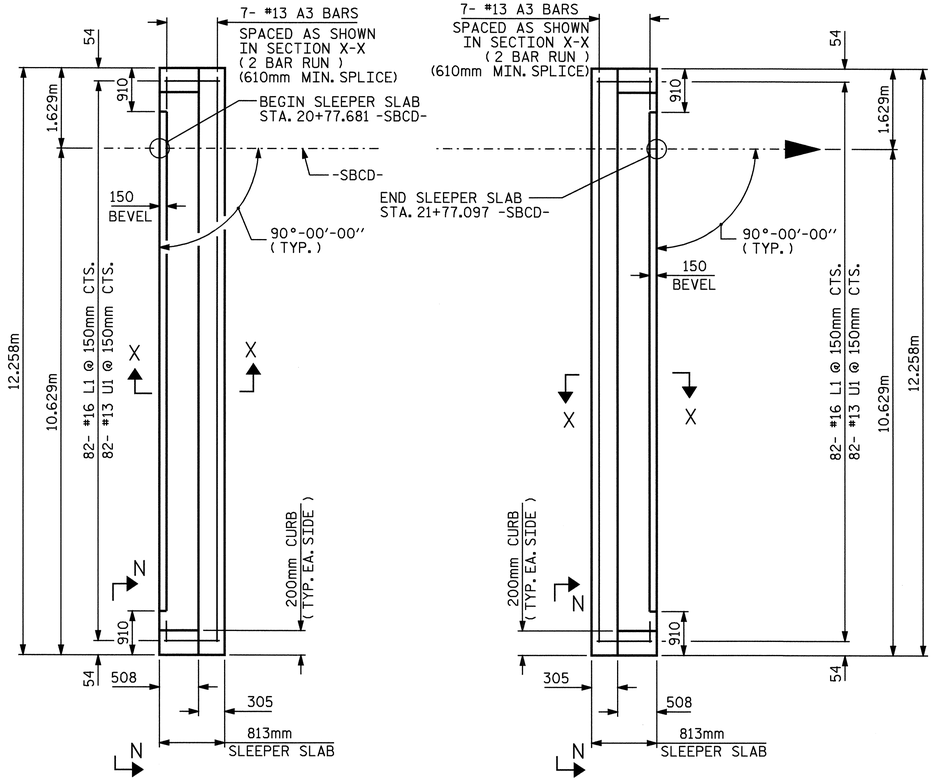

PLAN OF SLEEPER SLAB

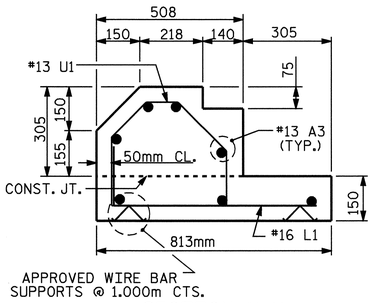

SECTION X-X

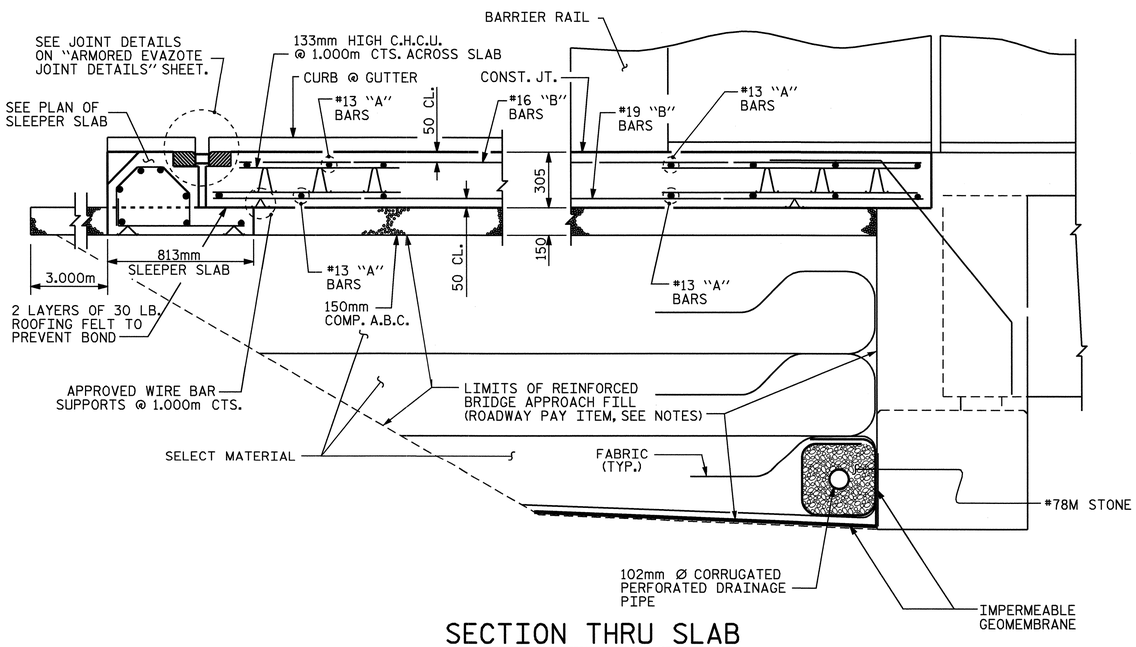

SECTION THRU SLAB

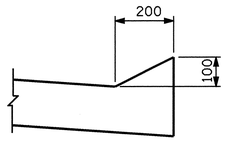

VIEW N-N

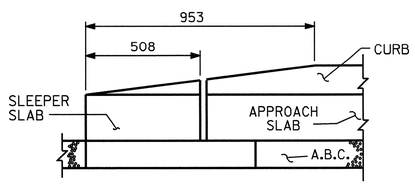

END OF CURB WITHOUT SHOULDER BERM GUTTER

CURB DETAILS

NOTES

APPROACH SLAB SHALL NOT BE CONSTRUCTED PRIOR TO COMPLETION OF THE BRIDGE DECK.

FOR REINFORCED BRIDGE APPROACH FILL INCLUDING FABRIC, IMPERMEABLE GEOMEMBRANE, 102mm Ø DRAINAGE PIPE, #78M STONE, AND SELECT MATERIAL, SEE ROADWAY PLANS.

TEMPORARY DRAINAGE AND TEMPORARY BERM AND SLOPE DRAINS WILL BE PAID FOR UNDER THE LUMP SUM PRICE FOR BRIDGE APPROACH SLAB.

AREA BETWEEN THE WINGWALL AND APPROACH SLAB SHALL BE GRADED TO DRAIN THE WATER AWAY FROM THE FILL FACE OF THE BRIDGE.

THE 150mm COMP. A.B.C. SHALL EXTEND 3.000m BEYOND THE END OF THE SLEEPER SLAB AND 300mm OUTSIDE OF EACH EDGE OF THE SLEEPER SLAB. THIS MATERIAL ALSO SHALL BE PLACED BETWEEN THE SLEEPER SLAB AND THE ABUTMENT AND 300mm OUTSIDE OF EACH EDGE OF THE APPROACH SLAB.

THE CONTRACTOR MAY USE 100mm TYPE B-25.0B ASPHALT CONCRETE BASE COURSE IN LIEU OF 150mm COMP. A.B.C. IF THIS OPTION IS USED, THE BASE COURSE SHALL EXTEND 300mm BEYOND THE END OF THE SLEEPER SLAB AND THE WIDTH SHALL BE THE SAME AS THAT OF THE SLEEPER SLAB. THIS MATERIAL ALSO SHALL BE PLACED BETWEEN THE SLEEPER SLAB AND THE ABUTMENT AND THE WIDTH SHALL BE THE SAME AS THAT OF THE APPROACH SLAB.

THE CONTRACTOR MAY USE 125mm CLASS "A" CONCRETE BASE IN LIEU OF 150mm COMP. A.B.C. IF THIS OPTION IS USED, THE CONCRETE BASE SHALL EXTEND 300mm BEYOND THE END OF THE SLEEPER SLAB AND THE WIDTH SHALL BE THE SAME AS THAT OF THE SLEEPER SLAB. THIS MATERIAL ALSO SHALL BE PLACED BETWEEN THE SLEEPER SLAB AND THE ABUTMENT AND THE WIDTH SHALL BE THE SAME AS THAT OF THE APPROACH SLAB. THE CONCRETE SHALL BE FINISHED TO A SMOOTH SURFACE AND A LAYER OF 13.6 Kg. ROOFING FELT SHALL BE PLACED BETWEEN THE CONCRETE BASE AND THE APPROACH SLAB TO PREVENT BOND. THE APPROACH SLAB SHALL NOT BE CAST UNTIL THE CONCRETE BASE HAS REACHED AN AGE OF THREE CURING DAYS.

BILL OF MATERIAL

FOR ONE APPROACH SLAB (2 REQ'D)

BAR	NO.	SIZE	TYPE	LENGTH	WEIGHT
✱A1	52	#13	STR	6380	330
A2	52	#13	STR	6360	329
✱A3	14	#13	STR	6380	89
✱B1	82	#16	STR	7380	939
B2	82	#19	STR	7520	1378
✱B3	14	#16	STR	3560	77
✱B4	2	#16	3	1940	6
L1	82	#16	1	900	115
✱S1	50	#16	STR	980	76
✱S2	50	#16	1	1220	95
✱S3	20	#16	2	680	21
✱U1	82	#13	4	1240	101

REINFORCING STEEL	=	1822 KG
✱EPOXY COATED REINF. STEEL	=	1734 KG
CLASS AA CONCRETE BREAKDOWN		
POUR 1 SLEEPER SLAB AND CURB		3.4 C.M.
POUR 2 SLAB AND CURB		28.7 C.M.
POUR 3 RAIL		1.6 C.M.
CLASS AA CONCRETE		33.7 C.M.

BAR TYPES

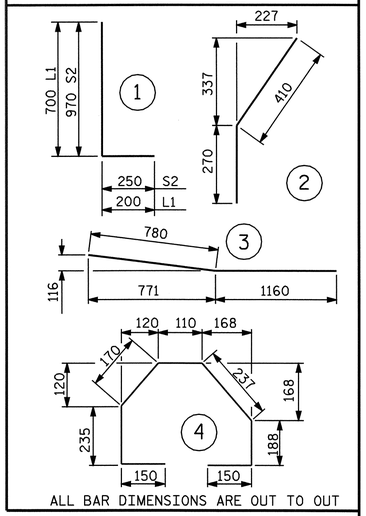

ALL BAR DIMENSIONS ARE OUT TO OUT

PROJECT NO. R-0609IA

GUILFORD COUNTY

STATION: 51+85.394 -L-

SHEET 1 OF 4

STATE OF NORTH CAROLINA
DEPARTMENT OF TRANSPORTATION
RALEIGH

BRIDGE APPROACH SLAB FOR FLEXIBLE PAVEMENT WITH BARRIER RAIL

REVISIONS						SHEET NO.
NO.	BY:	DATE:	NO.	BY:	DATE:	S-134
1			3			TOTAL SHEETS
2			4			321

NORTH CAROLINA PROFESSIONAL SEAL 23926 ENGINEER BRIAN C. HAWKS
3/22/06

DRAWN BY : M. D. PISO DATE : 08/2004
CHECKED BY : J. L. WALTON DATE : 10/2004

15-MAY-2006 15:50
G:\STRUCT~1\frye\FINAL_~1\Str4\R0609I~2.DGN
dely

STR. #4

G:\STRUCTØ1\fryø\FINAL_Ø1\Str1\R0609IØ2.DGN
dely

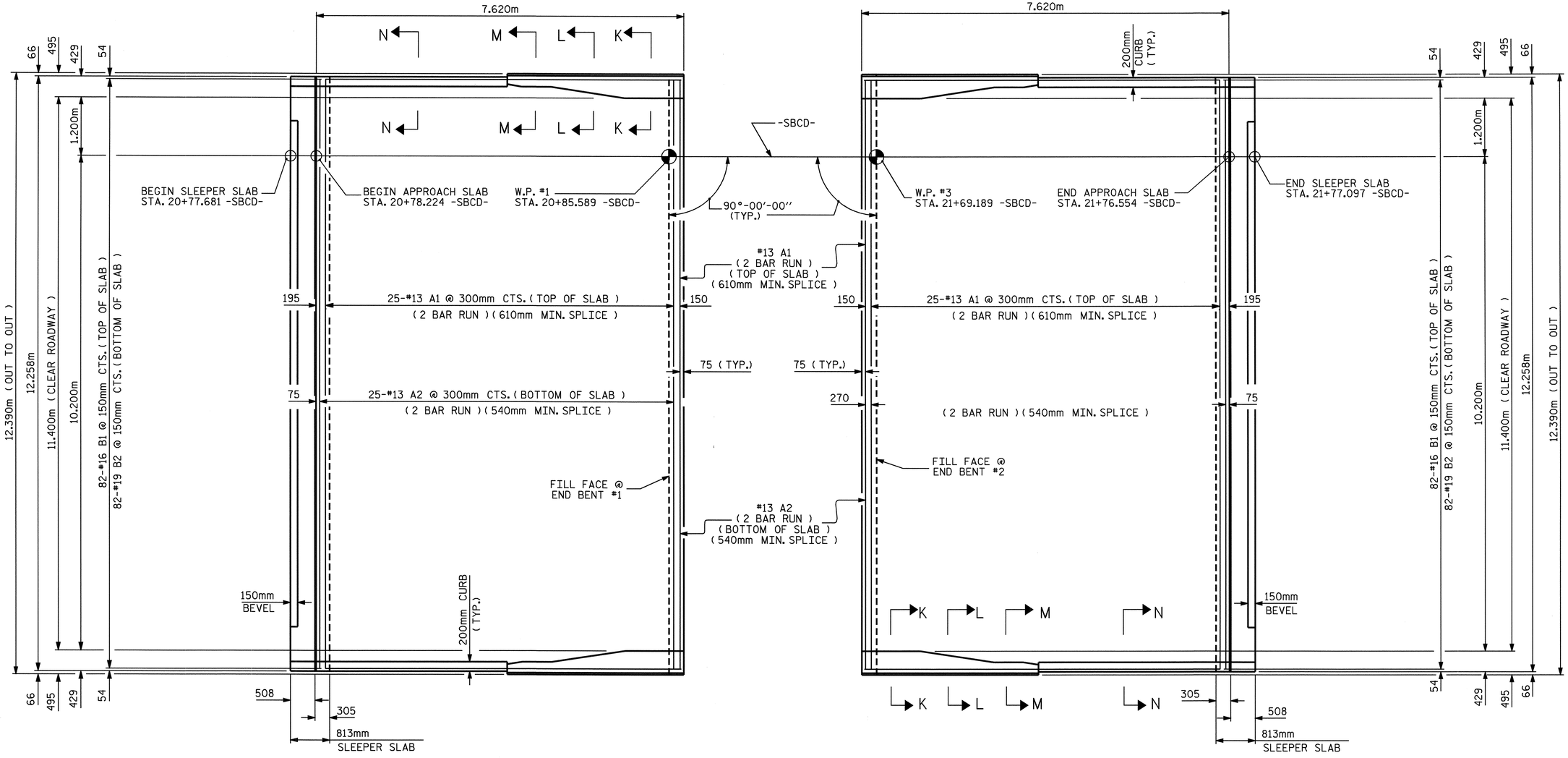

PLAN @ END BENT #1

PLAN @ END BENT #2

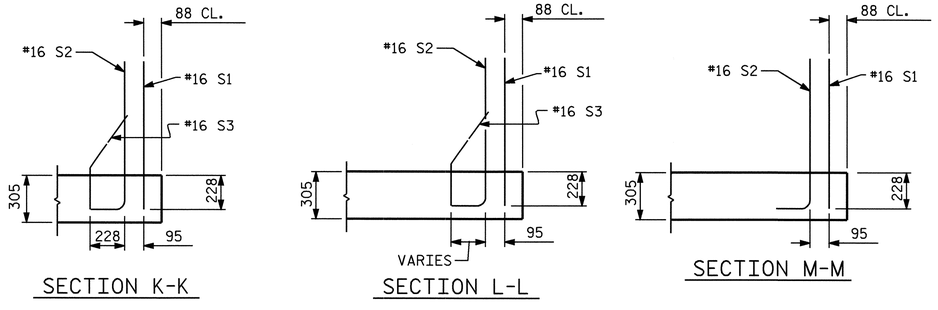

SECTION K-K

SECTION L-L

SECTION M-M

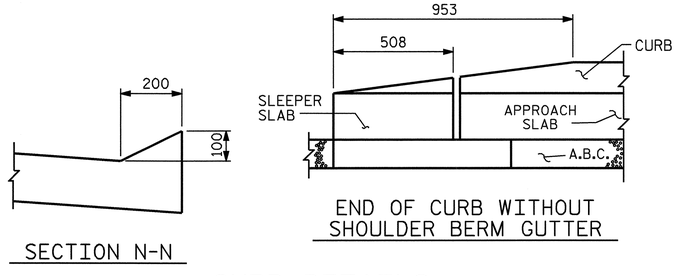

SECTION N-N

END OF CURB WITHOUT SHOULDER BERM GUTTER

CURB DETAILS

PROJECT NO. R-0609IA

GUILFORD COUNTY

STATION: 51+85.394 -L-

SHEET 2 OF 4

STATE OF NORTH CAROLINA
DEPARTMENT OF TRANSPORTATION
RALEIGH

BRIDGE APPROACH SLAB FOR FLEXIBLE PAVEMENT WITH BARRIER RAIL

REVISIONS					
NO.	BY:	DATE:	NO.	BY:	DATE:
1			3		
2			4		

SHEET NO. S-135

TOTAL SHEETS 321

NORTH CAROLINA PROFESSIONAL SEAL 23926 ENGINEER BRIAN C. HANKS
5/22/06

DRAWN BY : M. D. PISO DATE : 08/2004
CHECKED BY : J. L. WALTON DATE : 10/2004

STR. #4

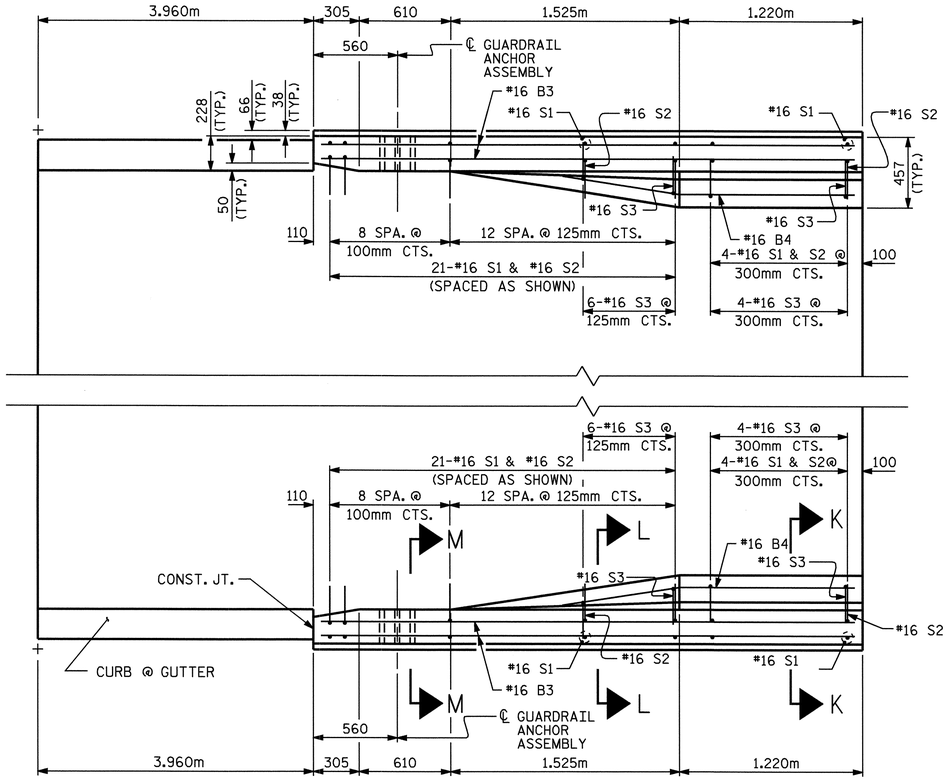

PLAN

BEGIN APPROACH SLAB SHOWN,
END APPROACH SLAB SIMILAR

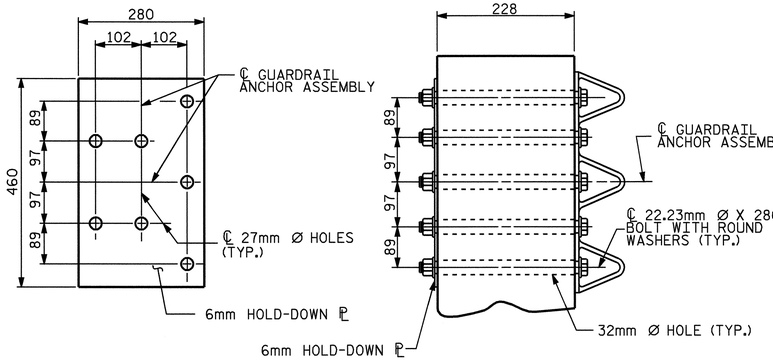

PLAN SECTION E-E

GUARDRAIL ANCHOR ASSEMBLY DETAILS

NOTES

THE GUARDRAIL ANCHOR ASSEMBLY SHALL CONSIST OF A 6mm HOLD DOWN PLATE AND 7 - 22.23mm Ø BOLTS WITH NUTS AND WASHERS.

THE HOLD-DOWN PLATE SHALL CONFORM TO AASHTO M270 GRADE 250. AFTER FABRICATION, THE HOLD-DOWN PLATE SHALL BE GALVANIZED IN ACCORDANCE WITH AASHTO M111.

BOLTS SHALL CONFORM TO THE REQUIREMENTS OF ASTM A307 AND NUTS SHALL CONFORM TO THE REQUIREMENTS OF AASHTO M291M. BOLTS, NUTS AND WASHERS SHALL BE GALVANIZED. AT THE CONTRACTOR'S OPTION, STAINLESS STEEL BOLTS, NUTS AND WASHERS MAY BE USED AS AN ALTERNATE FOR THE 22.23mm Ø GALVANIZED BOLTS, NUTS AND WASHERS. THEY SHALL CONFORM TO OR EXCEED THE MECHANICAL REQUIREMENTS OF ASTM A307. THE USE OF THIS ALTERNATE SHALL BE APPROVED BY THE ENGINEER.

AFTER INSTALLATION, THE EXPOSED THREAD OF THE BOLT SHALL BE BURRED WITH A SHARP POINTED TOOL.

THE COST OF THE GUARDRAIL ANCHOR ASSEMBLIES WITH BOLTS, NUTS AND WASHERS COMPLETE IN PLACE, SHALL BE INCLUDED IN THE LUMP SUM CONTRACT PRICE BID FOR BRIDGE APPROACH SLABS.

THE 32mm Ø HOLES SHALL BE FORMED OR DRILLED WITH A CORE BIT. IMPACT TOOLS WILL NOT BE PERMITTED. ANY CONCRETE DAMAGED BY THIS WORK SHALL BE REPAIRED TO THE SATISFACTION OF THE ENGINEER.

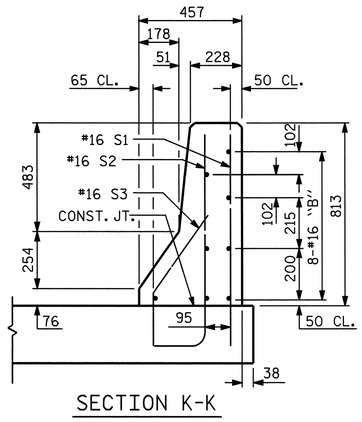

SECTION K-K

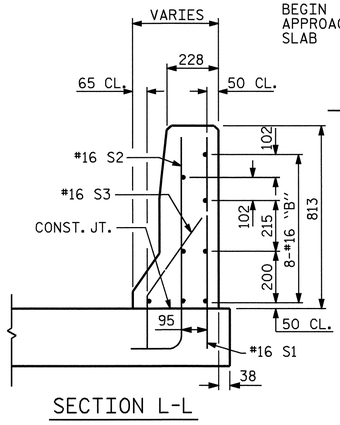

SECTION L-L

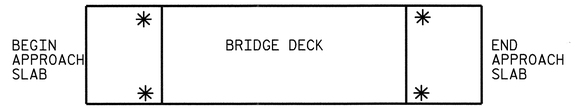

SKETCH SHOWING POINTS OF ATTACHMENT

✱ INDICATES POINTS OF ATTACHMENT

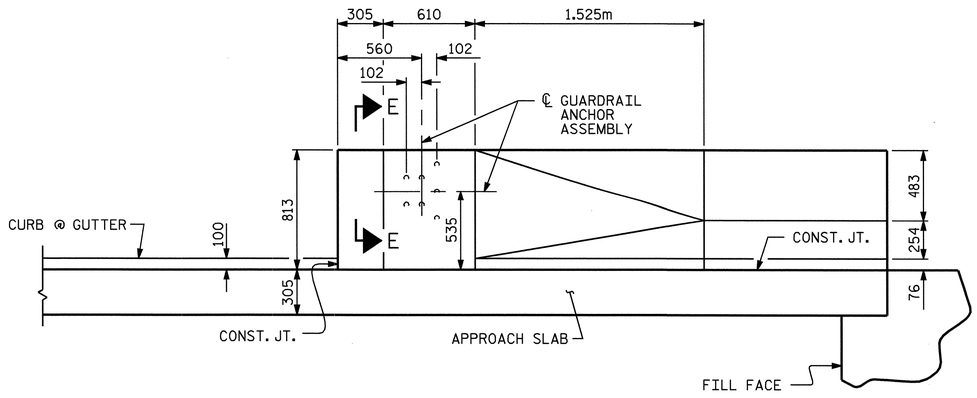

ELEVATION

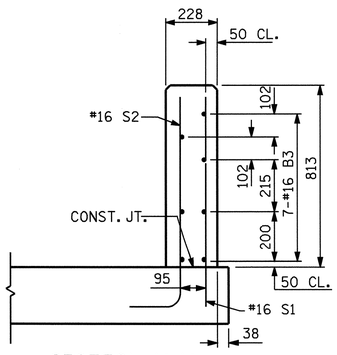

SECTION M-M

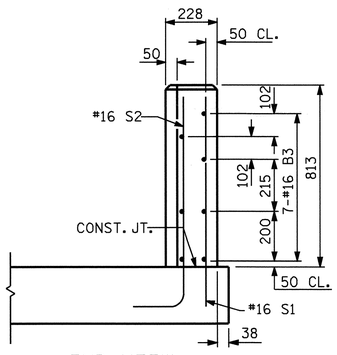

END VIEW

PROJECT NO. R-0609IA
GUILFORD COUNTY
STATION: 51+85.394 -L-

SHEET 3 OF 4

STATE OF NORTH CAROLINA
DEPARTMENT OF TRANSPORTATION
RALEIGH

BRIDGE APPROACH SLAB FOR FLEXIBLE PAVEMENT WITH BARRIER RAIL

REVISIONS						SHEET NO.
NO.	BY:	DATE:	NO.	BY:	DATE:	S-136
1			3			TOTAL SHEETS
2			4			321

NORTH CAROLINA PROFESSIONAL SEAL 23926 ENGINEER BRIAN C HANKS
5/22/06

DRAWN BY : M. D. PISO DATE : 08/2004
CHECKED BY : J. L. WALTON DATE : 10/2004

15-MAY-2006 15:49
G:\STRUCT~1\frye\FINAL_~1\Str4\R0609I~2.DGN
dely

STR. #4

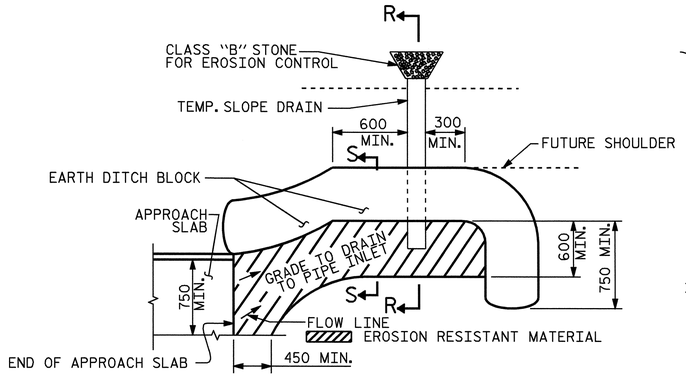

NOTE: IMMEDIATELY AFTER THE CONSTRUCTION OF THE APPROACH SLAB, THE CONTRACTOR SHALL PROVIDE TEMPORARY BERM AND SLOPE DRAIN. CONTRACTOR SHALL GRADE TO PIPE INLET AND PROVIDE EROSION RESISTANT MATERIAL AS SHOWN. THE EROSION RESISTANT MATERIAL SHALL BE EITHER 1) ASPHALT PLANT MIX, TYPE 1 OR TYPE 2, MIN. 50mm DEPTH, 2) EROSION CONTROL MAT, OR 3) CONCRETE, AS DIRECTED BY THE ENGINEER. THE SLOPE DRAIN SHALL CONSIST OF A NON-PERFORATED TEMPORARY DRAINAGE PIPE, 305mm IN DIAMETER.

PLAN VIEW

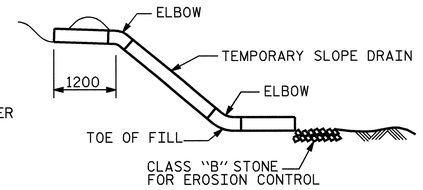

SECTION R-R

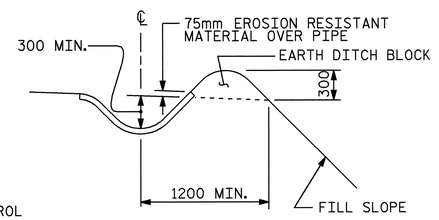

SECTION S-S

TEMPORARY BERM AND SLOPE DRAIN DETAILS

(TO BE USED WHEN SHOULDER BERM GUTTER IS REQUIRED)

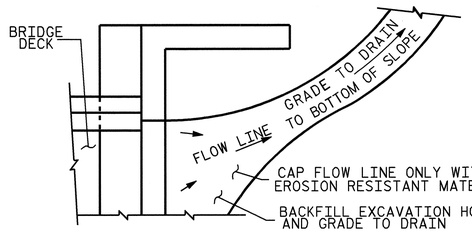

NOTE: IF THE APPROACH SLAB IS NOT CONSTRUCTED IMMEDIATELY AFTER THE BACKFILLING OF THE END BENT EXCAVATION, GRADE TO DRAIN TO THE BOTTOM OF THE SLOPE AND PROVIDE EROSION RESISTANT MATERIAL, SUCH AS FIBERGLASS ROVING OR AS DIRECTED BY THE ENGINEER TO PREVENT SOIL EROSION AND TO PROTECT THE AREA ADJACENT TO THE STRUCTURE. THE CONTRACTOR WILL BE REQUIRED TO REMOVE THESE MATERIALS PRIOR TO CONSTRUCTION OF THE APPROACH SLAB.

TEMPORARY DRAINAGE DETAIL

PROJECT NO. R-0609IA

GUILFORD COUNTY

STATION: 51+85.394 -L-

SHEET 4 OF 4

STATE OF NORTH CAROLINA
DEPARTMENT OF TRANSPORTATION
RALEIGH

BRIDGE APPROACH SLAB DETAILS

REVISIONS						SHEET NO.
NO.	BY:	DATE:	NO.	BY:	DATE:	S-137
1			3			TOTAL SHEETS
2			4			321

NORTH CAROLINA PROFESSIONAL SEAL 23926 ENGINEER BRIAN C. HANKS
5/22/06

DRAWN BY : M. D. PISO DATE : 08/2004
CHECKED BY : J. L. WALTON DATE : 10/2004

15-MAY-2006 15:49
G:\STRUCT~1\frye\FINAL_~1\Str4\R0609I~2.DGN
daly

STR. #4

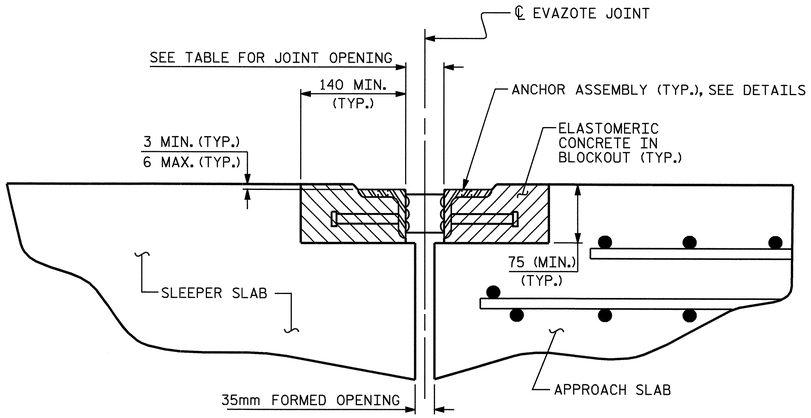

ARMORED JOINT DETAILS

SECTION NORMAL TO JOINT AT APPROACH SLAB

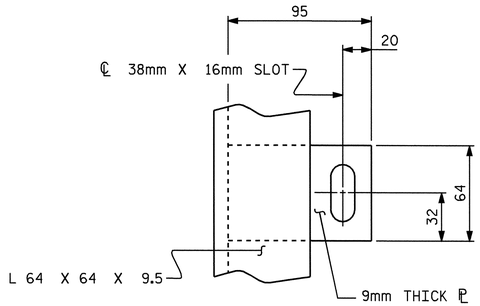

PLAN VIEW OF TAB

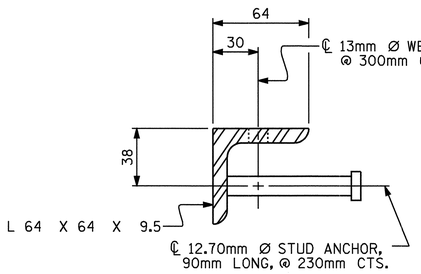

SECTION VIEW OF STUD

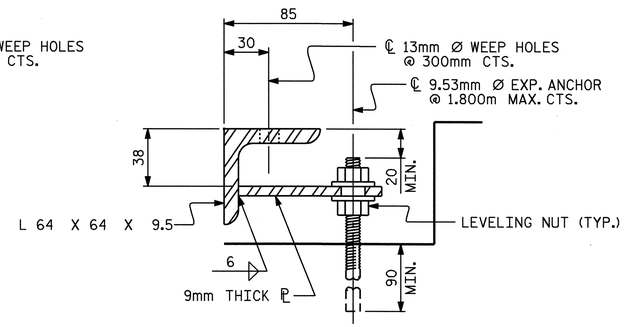

SECTION VIEW OF TAB

ARMORED JOINT ANCHOR ASSEMBLY DETAILS

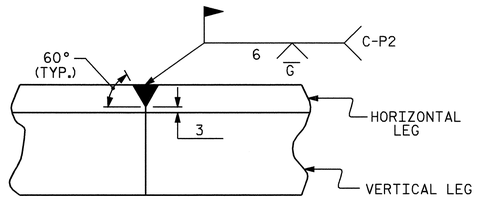

DETAIL- FIELD WELD SPLICE OF ANGLE

NOTES

ANGLES SHALL CONFORM TO AASHTO M270 GRADE 250 STEEL OR APPROVED EQUAL. ALL STUD ANCHORS SHALL CONFORM TO AASHTO M169 GRADES 1010 THRU 1020 OR APPROVED EQUAL.

STUD ANCHORS SHALL BE SHOP WELDED AND ALL HOLES SHALL BE SHOP DRILLED AS SHOWN ON THE PLANS. STUD ANCHORS SHALL BE ELECTRIC ARC END WELDED WITH COMPLETE FUSION.

UPON COMPLETION OF SHOP FABRICATION, THE ENTIRE ANCHOR ASSEMBLY SHALL BE METALLIZED. THE 12.70mm Ø STUD ANCHORS AND ANCHOR TABS NEED NOT BE METALLIZED. SEE SPECIAL PROVISION FOR THERMAL SPRAYED COATINGS (METALLIZATION).

ANCHOR ASSEMBLY SHALL BE MADE CONTINUOUS THE LENGTH OF THE JOINT FROM GUTTER TO GUTTER. FOR FIELD SPLICES AT ALL CROWN BREAK POINTS, THE ENDS OF THE STEEL ANGLES SHALL BE CUT PARALLEL TO THE BRIDGE CENTERLINE. FINISHED FIELD WELDS SHALL BE GROUND SMOOTH AND COATED WITH A MINIMUM THICKNESS OF 0.100mm OF ZINC-RICH PAINT IN ACCORDANCE WITH THE STANDARD SPECIFICATIONS.

ANCHOR ASSEMBLY SEGMENTS SHALL NOT BE LESS 3.6m NOR MORE THAN 6.1m IN LENGTH. SHORTER SEGMENTS MAY BE USED AT THE EDGE OF ROADWAY OR AT POINTS OF STAGED CONSTRUCTION.

THE ANCHOR ASSEMBLY SHALL BE SECURED AND LEVELED AS SHOWN IN THE "ARMORED JOINT ANCHOR ASSEMBLY DETAILS". NO SUBMITTALS ARE REQUIRED FOR 9.53mm Ø EXPANSION ANCHORS, NUTS OR WASHERS. THE CONTRACTOR MAY SUBMIT FOR APPROVAL AN ALTERNATE METHOD OF ALIGNING AND LEVELING THE ANGLES. THE ALTERNATE METHOD SHALL NOT INCLUDE ANY WELDING TO THE OUTSIDE FACE OF THE ANGLES.

AFTER THE ELASTOMERIC CONCRETE HAS BEEN CAST ON BOTH SIDES OF THE JOINT, REMOVE ANY EXCESS CONCRETE THAT COMES THROUGH THE WEEP HOLES AND THOROUGHLY CLEAN THE ANGLES. ANY DAMAGED STEEL SHALL BE COATED WITH A MINIMUM OF 0.100mm OF ZINC-RICH PAINT IN ACCORDANCE WITH THE STANDARD SPECIFICATIONS.

SEE SPECIAL PROVISIONS FOR EVAZOTE JOINT SEALS.

SEE SPECIAL PROVISIONS FOR ELASTOMERIC CONCRETE.

MOVEMENT AND SETTING AT EVAZOTE JOINT

APPROACH SLAB NO.	SKEW ANGLE	NOMINAL UNCOMPRESSED SEAL WIDTH	TOTAL MOVEMENT (ALONG ℄ RDWY)	PERPENDICULAR JOINT OPENING AT 7° C	PERPENDICULAR JOINT OPENING AT 16° C	PERPENDICULAR JOINT OPENING AT 32° C
1	90°-00'-00"	80mm	41mm	67mm	60mm	48mm
2	90°-00'-00"	80mm	41mm	67mm	60mm	48mm

TOTAL MOVEMENT IS CALCULATED ALONG THE CENTERLINE OF ROADWAY.
JOINT OPENINGS ARE MEASURED PERPENDICULAR TO THE JOINT.

BILL OF MATERIAL

APPROACH SLAB NO.	ELASTOMERIC CONCRETE * (CU. m)	TOTAL LENGTH OF ANGLE (m)
1	0.3	23.000m
2	0.3	23.000m

* BASED ON THE MINIMUM BLOCKOUT SHOWN.

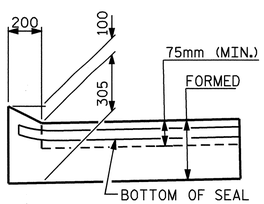

SECTION A-A

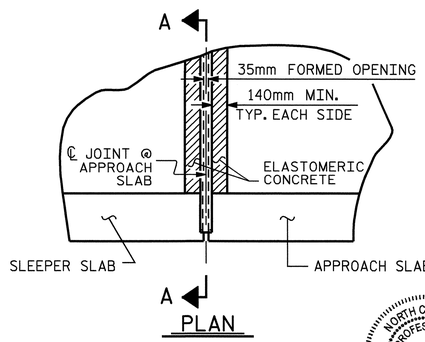

PLAN

PROJECT NO. R-0609IA
GUILFORD COUNTY
STATION: 51+85.394 -L-

STATE OF NORTH CAROLINA
DEPARTMENT OF TRANSPORTATION
RALEIGH

STANDARD ARMORED EVAZOTE JOINT DETAILS

REVISIONS						SHEET NO.
NO.	BY:	DATE:	NO.	BY:	DATE:	S-138
1			3			TOTAL SHEETS
2			4			321

NORTH CAROLINA PROFESSIONAL SEAL 23926 ENGINEER BRIAN C. HANKS
5/22/06

ASSEMBLED BY : R.W. WRIGHT	DATE : 6-05	
CHECKED BY : B.C. HANKS	DATE : 7-01-05	
DRAWN BY : EEM 1/96	REV. 10/17/00	RWW/LES
CHECKED BY : RGW 1/96	REV. 7/10/01	LES/RDR
	REV. 5/7/03RR	RWW/JTE

15-MAY-2006 15:49
G:\STRUCT~1\frye\FINAL_~1\Str4\R0609I~1.DGN
delv

STR. #4

STD. NO. AEJ1SM

F.A. PROJECT: STP-NHF-119-1(15)

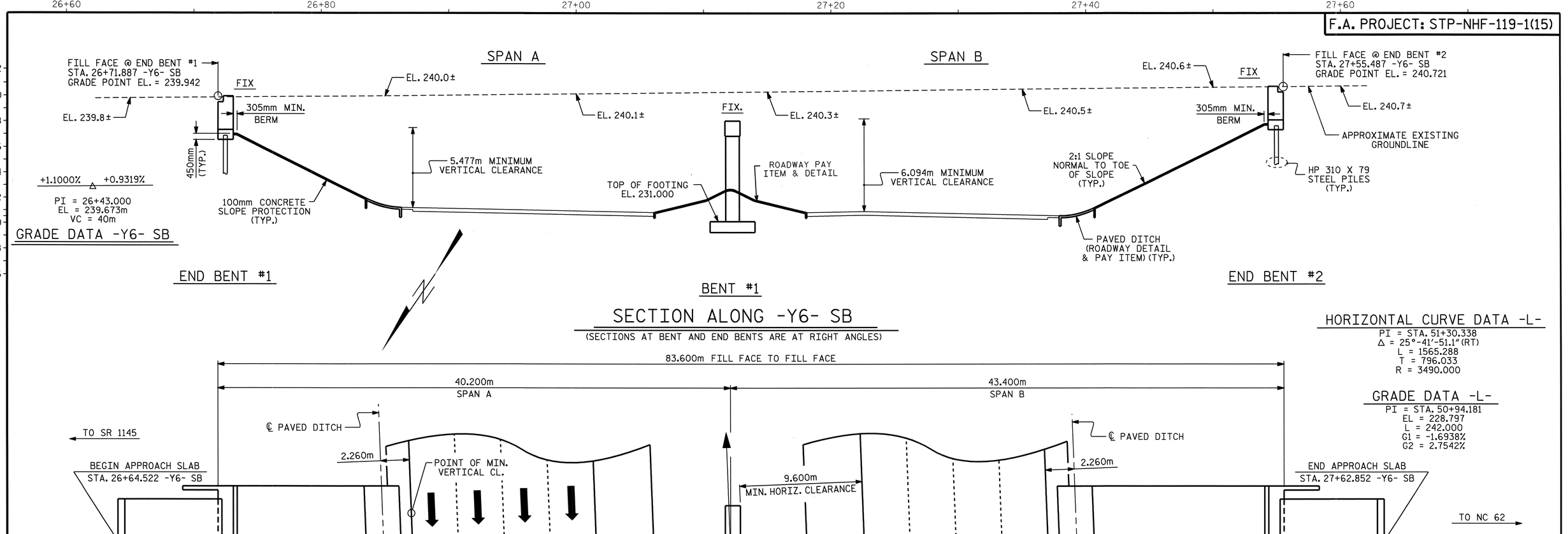

SECTION ALONG -Y6- SB

(SECTIONS AT BENT AND END BENTS ARE AT RIGHT ANGLES)

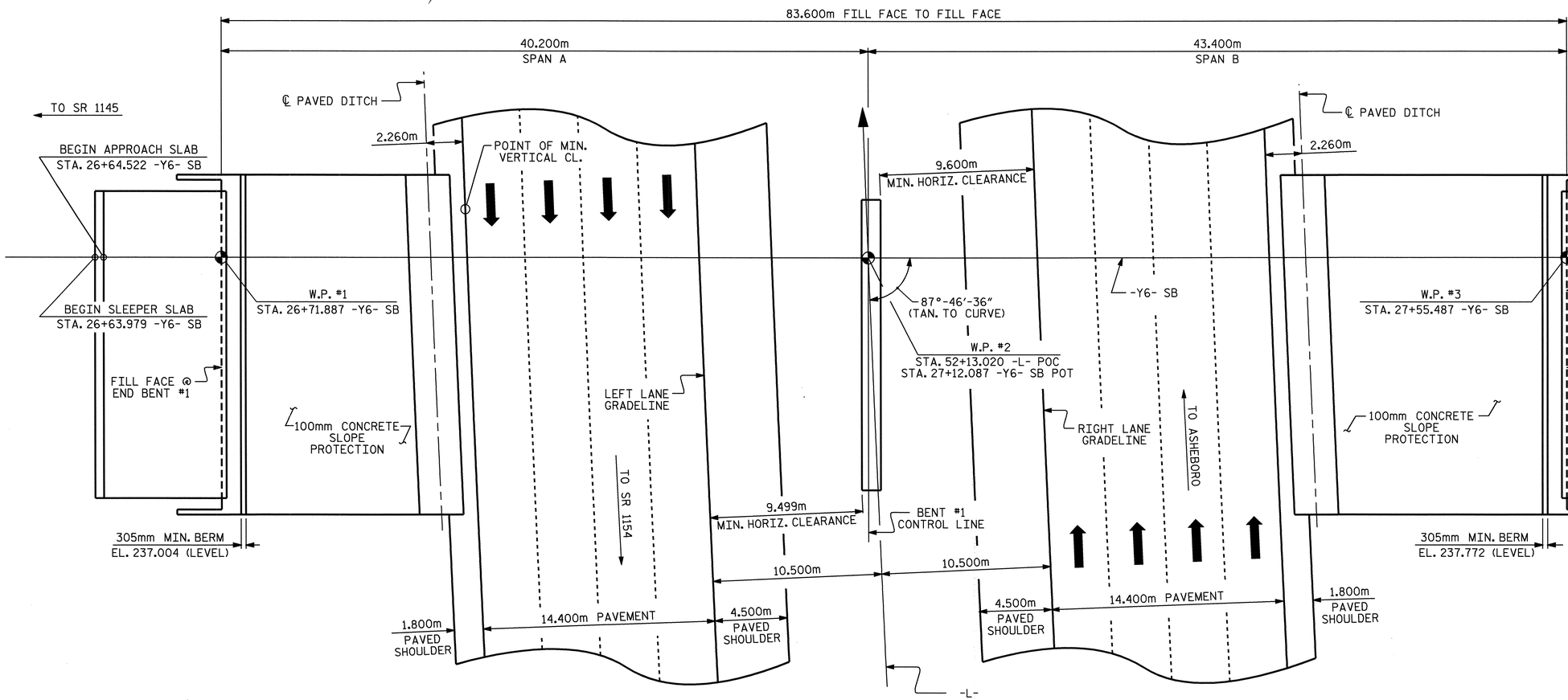

PLAN

(PILES & FOOTINGS NOT SHOWN IN PLAN VIEW FOR CLARITY)

END BENTS AND BENTS SHALL BE CONSTRUCTED AT A SKEW ANGLE OF 90° 00' 00"

HORIZONTAL CURVE DATA -L-

PI = STA. 51+30.338
Δ = 25°-41'-51.1" (RT)
L = 1565.288
T = 796.033
R = 3490.000

GRADE DATA -L-

PI = STA. 50+94.181
EL = 228.797
L = 242.000
G1 = -1.6938%
G2 = 2.7542%

METRIC

PROJECT NO. R-0609IA

GUILFORD COUNTY

STATION: 52+13.020 -L- POC
27+12.087 -Y6- SB POT

SHEET 1 OF 3 BRIDGE No. 974

STATE OF NORTH CAROLINA
DEPARTMENT OF TRANSPORTATION
RALEIGH

GENERAL DRAWING FOR BRIDGE ON I-85 SOUTHBOUND OVER US 311 BETWEEN SR 1145 AND NC 62

REVISIONS						SHEET NO.
NO.	BY:	DATE:	NO.	BY:	DATE:	S-139
1			3			TOTAL SHEETS
2			4			321

NORTH CAROLINA PROFESSIONAL SEAL 11915 ENGINEER JOHN C. FRYE
5-22-06

NORTH CAROLINA PROFESSIONAL SEAL 23926 ENGINEER BRIAN C. HAWKS
5/22/06

DRAWN BY : B.N. GRADY/QT NGUYEN DATE : 3-04/5-05
CHECKED BY : R. W. WRIGHT DATE : 5-05

15-MAY-2006 15:42
G:\STRUCT~1\frye\FINAL_~1\Str5\R023DD~1.DGN
dely

STR. #5

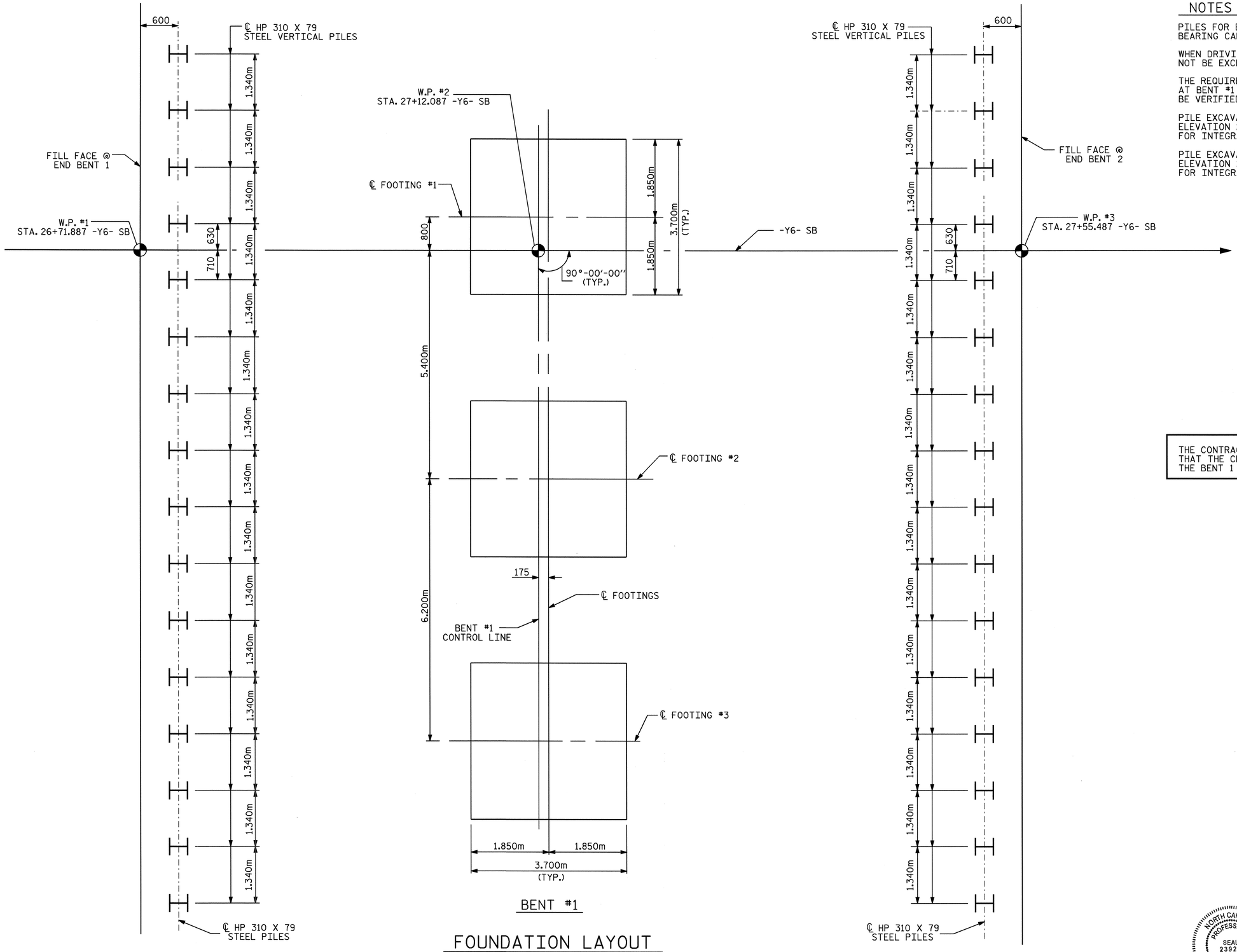

END BENT #1

BENT #1

END BENT #2

FOUNDATION LAYOUT

ALL PILES ARE HP 310 X 79 STEEL PILES.
DIMENSIONS LOCATING PILES ARE SHOWN TO ℄ PILES.
DIMENSIONS LOCATING FOOTINGS ARE SHOWN TO ℄ FOOTING.

NOTES

PILES FOR END BENT #1 & #2 SHALL BE DRIVEN TO A MINIMUM BEARING CAPACITY OF 530 kN EACH.

WHEN DRIVING PILES, THE MAXIMUM BLOW COUNT SHALL NOT BE EXCEEDED.

THE REQUIRED BEARING CAPACITY OF THE SPREAD FOOTINGS AT BENT #1 IS 480kPA. THE REQUIRED BEARING CAPACITY SHALL BE VERIFIED.

PILE EXCAVATION SHALL BE UTILIZED TO INSTALL PILES TO ELEVATION 232.000 AT END BENT #1. SEE "PILE EXCAVATION FOR INTEGRAL ABUTMENT" SPECIAL PROVISION.

PILE EXCAVATION SHALL BE UTILIZED TO INSTALL PILES TO ELEVATION 232.770 AT END BENT #2. SEE "PILE EXCAVATION FOR INTEGRAL ABUTMENT" SPECIAL PROVISION.

THE CONTRACTOR'S ATTENTION IS CALLED TO THE FACT THAT THE CENTERLINE OF THE FOOTINGS IS OFFSET FROM THE BENT 1 CONTROL LINE.

DRAWN BY : QT NGUYEN DATE : 4-05
CHECKED BY : R.W. WRIGHT DATE : 5-05

15-MAY-2006 15:42
G:\STRUCT~1\fry\e\FINAL_~1\Str5\R023DD~1.DGN
dely

PROJECT NO. R-0609IA
GUILFORD COUNTY
STATION: 52+13.020 -L-

SHEET 2 OF 3

STATE OF NORTH CAROLINA
DEPARTMENT OF TRANSPORTATION
RALEIGH

GENERAL DRAWING FOR BRIDGE ON I-85 SOUTHBOUND OVER US 311 BETWEEN SR 1145 AND NC 62

REVISIONS						SHEET NO.
NO.	BY:	DATE:	NO.	BY:	DATE:	S-140
1			3			TOTAL SHEETS
2			4			321

NORTH CAROLINA PROFESSIONAL SEAL 23926 ENGINEER BRIAN C. HANKS
3/22/06

STR. #5

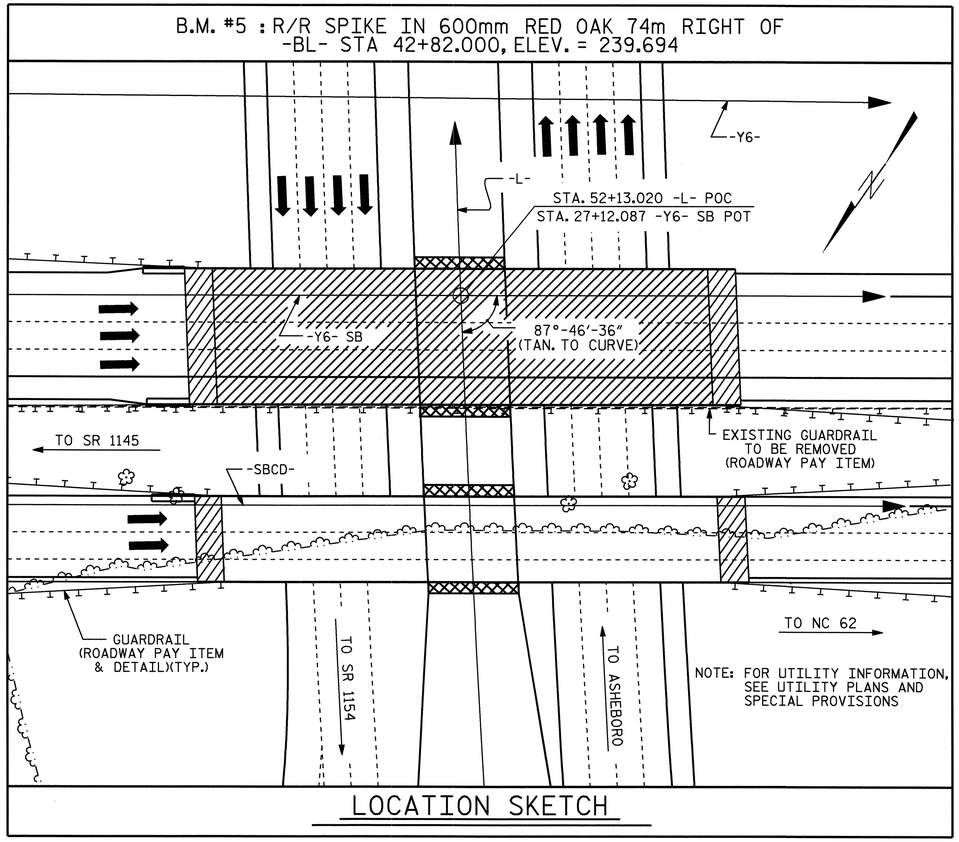

NOTES

ALL DIMENSIONS ARE IN MILLIMETERS UNLESS OTHERWISE NOTED.

ALL ELEVATIONS ARE IN METERS.

ASSUMED LIVE LOAD = MS 18 OR ALTERNATE LOADING.

FOR OTHER DESIGN DATA AND GENERAL NOTES, SEE SHEET SNSM.

THIS BRIDGE HAS BEEN DESIGNED BY THE STRENGTH DESIGN METHOD AS SPECIFIED IN AASHTO STANDARD SPECIFICATIONS.

ALL STRUCTURAL STEEL SHALL BE AASHTO M270 GRADE 345W AND PAINTED IN ACCORDANCE WITH SYSTEM 4 OF ARTICLE 442-7 OF THE STANDARD SPECIFICATIONS UNLESS OTHERWISE NOTED ON THE PLANS.

THIS BRIDGE HAS BEEN DESIGNED IN ACCORDANCE WITH THE REQUIREMENTS OF THE AASHTO STANDARD SPECIFICATIONS FOR SEISMIC DESIGN OF HIGHWAY BRIDGES FOR SEISMIC PERFORMANCE CATEGORY A.

THE CONTRACTOR SHALL PROVIDE INDEPENDENT ASSURANCE SAMPLES OF REINFORCING STEEL AS FOLLOWS: FOR PROJECTS REQUIRING UP TO 360,000 kg OF REINFORCING STEEL, ONE 760mm SAMPLE OF EACH SIZE BAR USED, AND FOR PROJECTS REQUIRING OVER 360,000 kg OF REINFORCING STEEL, TWO 760mm SAMPLES OF EACH SIZE BAR USED. THE BARS FROM WHICH THE SAMPLES ARE TAKEN MUST THEN BE SPLICED WITH REPLACEMENT BARS OF THE SIZE AND LENGTH OF THE SAMPLE PLUS A MINIMUM LAP SPLICE OF THIRTY BAR DIAMETERS.

FOR FALSEWORK AND FORMWORK, SEE SPECIAL PROVISIONS.

FOR EROSION CONTROL MEASURES SEE EROSION CONTROL PLANS.

REMOVABLE FORMS MAY BE USED IN LIEU OF METAL STAY-IN-PLACE FORMS IN ACCORDANCE WITH ARTICLE 420-3 OF THE STANDARD SPECIFICATIONS.

THE CLASS AA CONCRETE IN THE BRIDGE DECK SHALL CONTAIN FLY ASH OR GROUND GRANULATED BLAST FURNACE SLAG AT THE SUBSTITUTION RATE SPECIFIED IN ARTICLE 1024-1 AND IN ACCORDANCE WITH ARTICLES 1024-5 AND 1024-6 OF THE STANDARD SPECIFICATIONS. NO PAYMENT WILL BE MADE FOR THIS SUBSTITUTION AS IT IS CONSIDERED INCIDENTAL TO THE COST OF THE REINFORCED CONCRETE DECK SLAB.

NEEDLE BEAMS WILL NOT BE ALLOWED UNLESS OTHERWISE CALLED FOR ON THE PLANS OR APPROVED BY THE ENGINEER.

FOR SUBMITTAL OF WORKING DRAWINGS, SEE SPECIAL PROVISIONS.

FOR METRIC STRUCTURAL STEEL, SEE SPECIAL PROVISIONS.

FOR CRANE SAFETY, SEE SPECIAL PROVISIONS.

WORK SHALL NOT BE STARTED ON THIS BRIDGE UNTIL ROADWAY SECTION HAS BEEN EXCAVATED.

FOR STEEL H PILES, SEE SPECIAL PROVISIONS.

TOTAL BILL OF MATERIAL

	FOUNDATION EXCAVATION	PILE EXCAVATION IN SOIL	PILE EXCAVATION NOT IN SOIL	REINFORCED CONCRETE DECK SLAB	GROOVING BRIDGE FLOORS	CLASS A CONCRETE	BRIDGE APPROACH SLABS	REINFORCING STEEL	SPIRAL COLUMN REINFORCING STEEL	STRUCTURAL STEEL	HP 310 X 79 STEEL PILES		CONCRETE BARRIER RAIL	100mm SLOPE PROTECTION	POT BEARINGS	ELASTOMERIC BEARINGS	EVAZOTE JOINT SEALS
	LUMP SUM	METERS	METERS	SQ. METERS	SQ. METERS	CU. METERS	LUMP SUM	kg	kg	APPROX. kg	NO.	METERS	METERS	SQ. METERS	LUMP SUM	LUMP SUM	LUMP SUM
SUPERSTRUCTURE				1587.6	1679.5		LUMP SUM			278,270			166.180		LUMP SUM	LUMP SUM	LUMP SUM
END BENT 1		7.0	66.1			28.9		2639			16	73.1		260			
BENT 1	LUMP SUM					88.2		9025	608								
END BENT 2		14.4	58.7			28.8		2631			16	73.1		325			
TOTAL	LUMP SUM	21.4	124.8	1587.6	1679.5	145.9	LUMP SUM	14295	608	278,270	32	146.2	166.180	585	LUMP SUM	LUMP SUM	LUMP SUM

PROJECT NO. R-0609IA

GUILFORD COUNTY

STATION: 52+13.020 -L-

SHEET 3 OF 3

STATE OF NORTH CAROLINA
DEPARTMENT OF TRANSPORTATION
RALEIGH

GENERAL DRAWING FOR BRIDGE ON I-85 SOUTHBOUND OVER US 311 BETWEEN SR 1145 AND NC 62

NORTH CAROLINA PROFESSIONAL SEAL 23926 ENGINEER BRIAN C. HANKS
5/22/06

REVISIONS						SHEET NO.
NO.	BY:	DATE:	NO.	BY:	DATE:	S-141
1			3			TOTAL SHEETS
2			4			321

STR. #5

DRAWN BY : B.N. GRADY/QT NGUYEN DATE : 3-04/5-05
CHECKED BY : R.W. WRIGHT DATE : 5-05

15-MAY-2006 15:42
G:\STRUCT~1\frye\FINAL_~1\Str5\R023DD~1.DGN
dely

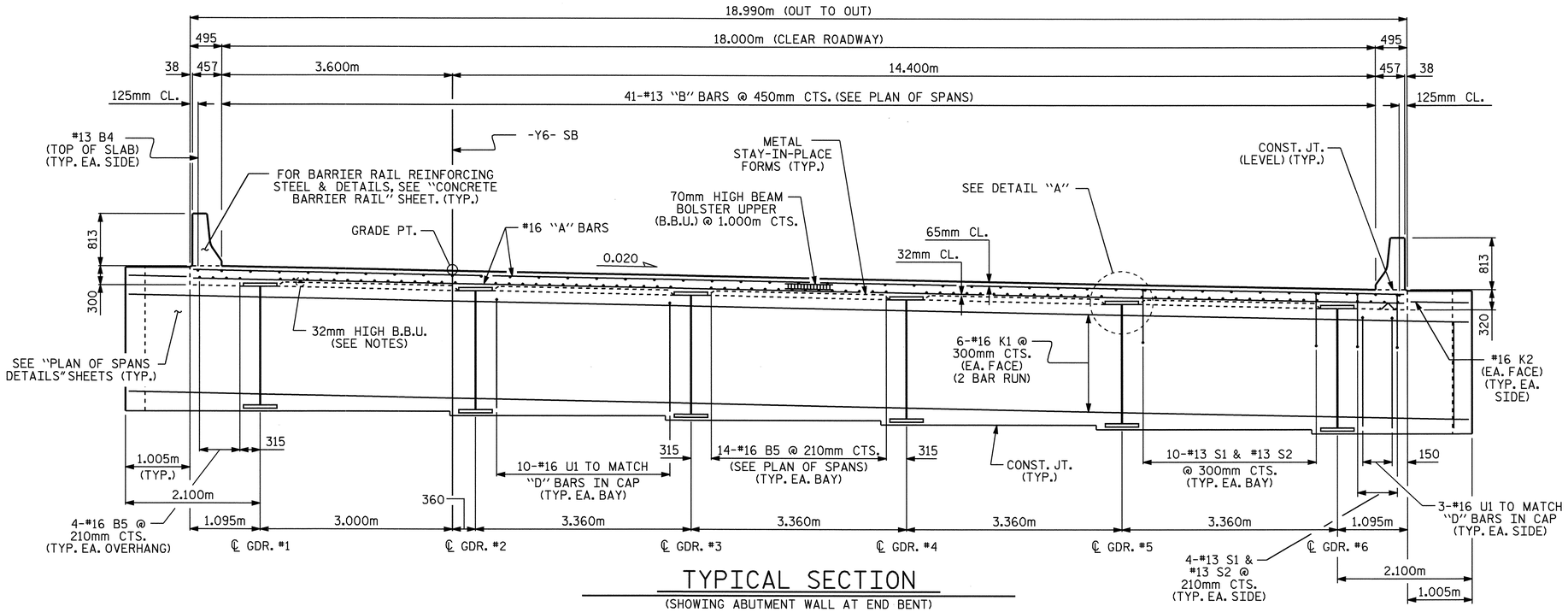

TYPICAL SECTION

(SHOWING ABUTMENT WALL AT END BENT)

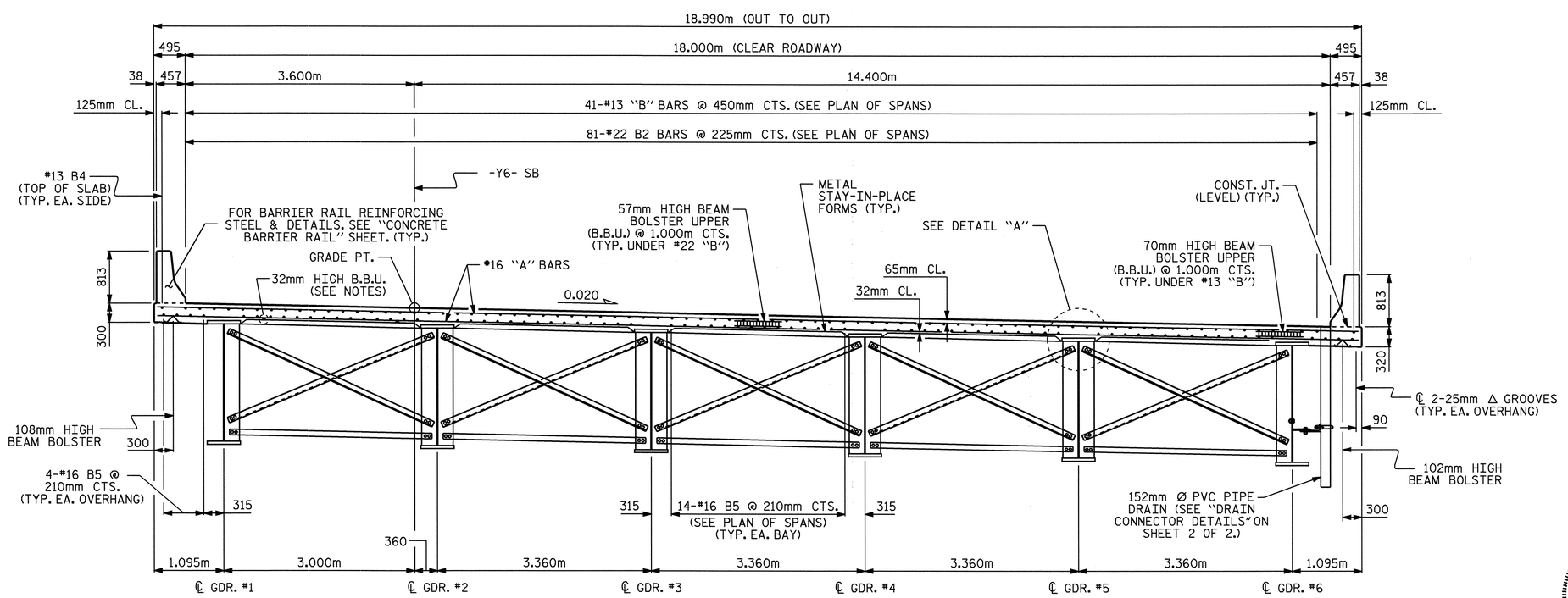

TYPICAL SECTION

(SHOWING BENT AND INTERMEDIATE DIAPHRAGMS)

NOTES

PROVIDE 32mm HIGH BEAM BOLSTERS UPPER AT 1.2m CTS. ATOP THE METAL STAY-IN-PLACE FORMS TO SUPPORT THE BOTTOM MAT OF "A" BARS. WHEN USING REMOVABLE FORMS, PROVIDE CONTINUOUS HIGH CHAIRS FOR METAL DECK (C.H.C.M.) @ 1.200m CTS. WITH A HEIGHT TO SUPPORT THE BOTTOM MAT OF "A" BARS A CLEAR DISTANCE OF 65mm ABOVE THE TOP OF THE REMOVABLE FORM.

METAL STAY-IN-PLACE FORMS SHALL NOT BE WELDED TO BEAM OR GIRDER FLANGES IN THE ZONES REQUIRING CHARPY V-NOTCH TEST. SEE STRUCTURAL STEEL DETAIL SHEETS.

PREVIOUSLY CAST CONCRETE IN A CONTINUOUS UNIT SHALL HAVE ATTAINED A MINIMUM COMPRESSIVE STRENGTH OF 20.7 MPa BEFORE ADDITIONAL CONCRETE IS CAST IN THE UNIT.

BARRIER RAIL IN A CONTINUOUS UNIT SHALL NOT BE CAST UNTIL ALL SLAB CONCRETE IN THE UNIT HAS BEEN CAST AND HAS REACHED A MINIMUM COMPRESSIVE STRENGTH OF 20.7 MPa.

STRUCTURAL STEEL ERECTION IN A CONTINUOUS UNIT SHALL BE COMPLETE BEFORE FALSEWORK OR FORMS ARE PLACED ON THE UNIT.

THE CONTRACTOR MAY, WHEN NECESSARY, PROPOSE A SCHEME FOR AVOIDING INTERFERENCE BETWEEN METAL STAY-IN-PLACE FORM SUPPORTS OR FORMS AND BEAM/GIRDER STIFFENERS OR CONNECTOR PLATES. THE PROPOSAL SHALL BE INDICATED, AS APPROPRIATE, ON EITHER THE STEEL WORKING DRAWINGS OR THE METAL STAY-IN-PLACE FORM WORKING DRAWINGS.

REMOVABLE FORMS MAY BE USED IN LIEU OF METAL STAY-IN-PLACE FORMS IN ACCORDANCE WITH ARTICLE 420-3 OF THE STANDARD SPECIFICATIONS.

FOR WING ELEVATIONS AND DETAILS, SEE "PLAN OF SPANS DETAILS" SHEETS.

THE CONTRACTOR SHALL ADJUST THE GIRDER BUILDUPS AS NECESSARY TO INCORPORATE A MAXIMUM PERMISSIBLE VARIATION IN POT BEARING DEPTH OF 13mm, SEE SPECIAL PROVISION FOR POT BEARINGS.

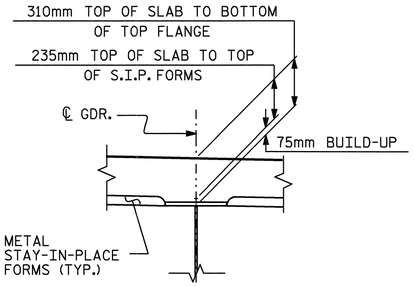

DETAIL "A"

PROJECT NO. R-0609IA

GUILFORD COUNTY

STATION: 52+13.020 -L-

SHEET 1 OF 2

STATE OF NORTH CAROLINA
DEPARTMENT OF TRANSPORTATION
RALEIGH

SUPERSTRUCTURE

TYPICAL SECTION

(SOUTHBOUND LANE)

REVISIONS						SHEET NO.
NO.	BY:	DATE:	NO.	BY:	DATE:	S-142
1			3			TOTAL SHEETS
2			4			321

STR. #5

NORTH CAROLINA PROFESSIONAL SEAL 23926 ENGINEER BRIAN C. HANKS
5/22/06

DRAWN BY : D. G. ELY DATE : 2/23/05
CHECKED BY : A. B. NAIK DATE : 4/05

15-MAY-2006 15:41
G:\STRUCT~1\frye\FINAL_~1\Str5\ROEEDI~1.DGN
dely

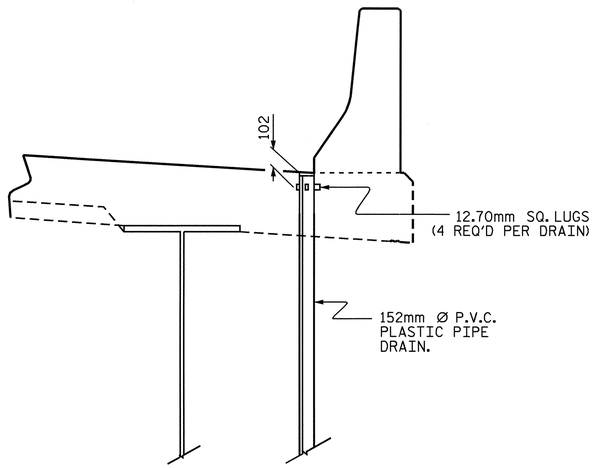

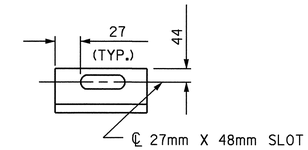

SECTION B-B

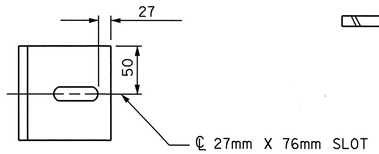

SECTION A-A

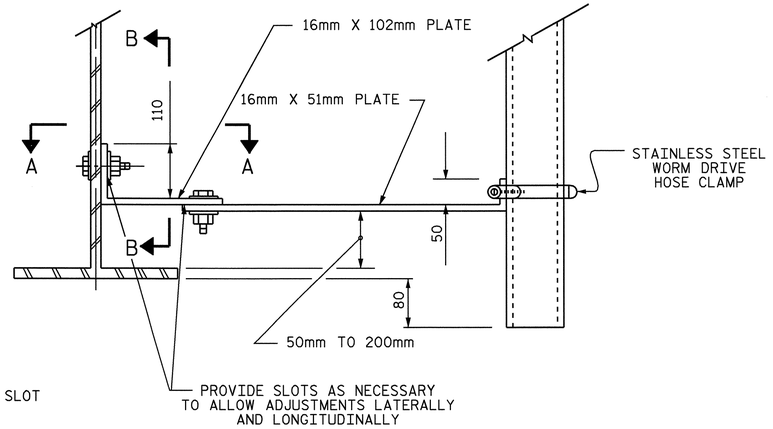

NOTES

BOLT SIZE FOR PIPE DRAIN BRACKETS TO BE SAME AS DIAPHRAGMS AND CROSSFRAME CONNECTIONS. STAINLESS STEEL WORM DRIVE HOSE CLAMP SHALL BE COMMERCIAL QUALITY.

PLATES FOR PIPE DRAIN BRACKETS SHALL CONFORM TO AASHTO M270 GRADE 250 STEEL OR APPROVED EQUAL.

PVC DECK DRAINS SHALL BE PAINTED WITH TWO COATS OF BROWN PRIMER MEETING THE REQUIREMENTS OF ARTICLE 1080-12 OF THE STANDARD SPECIFICATIONS. EACH COAT SHALL BE 0.050mm THICK. DECK DRAINS SHALL BE ROUGHENED PRIOR TO PAINTING. NO SEPARATE PAYMENT SHALL BE MADE FOR PAINTING PVC DECK DRAINS AS THIS IS CONSIDERED INCIDENTAL TO THE PAY ITEM FOR REINFORCED CONCRETE DECK SLAB.

TOP OF FLOOR DRAIN TO BE SET 10mm BELOW SURFACE OF SLAB.

4 - 13mm SQUARE LUGS TO BE GLUED TO THE PVC PLASTIC PIPE AT EQUAL SPACES AROUND THE PIPE DRAIN APPROXIMATELY 100mm FROM THE TOP OF THE PIPE.

COUPLING IN DRAIN PIPE WILL BE PERMITTED AS APPROVED BY THE ENGINEER.

THE 152mm DIA. PVC PIPE AND FITTINGS SHALL BE SCHEDULE 40 AND CONFORM TO ASTM D1785.

DRAIN CONNECTOR DETAILS

(8 DRAINS REQUIRED)

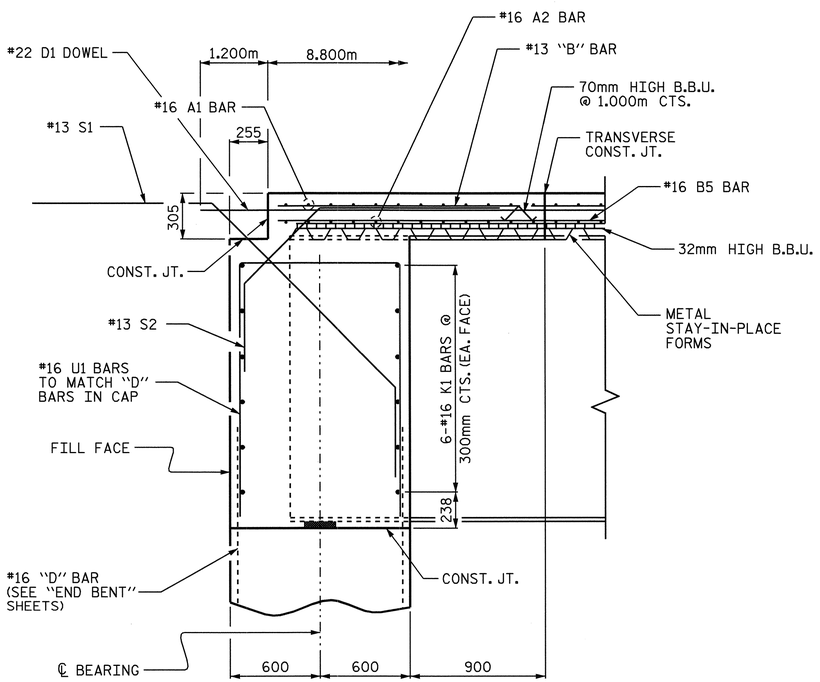

SECTION AT END BENT

(SHOWING ABUTMENT WALL)

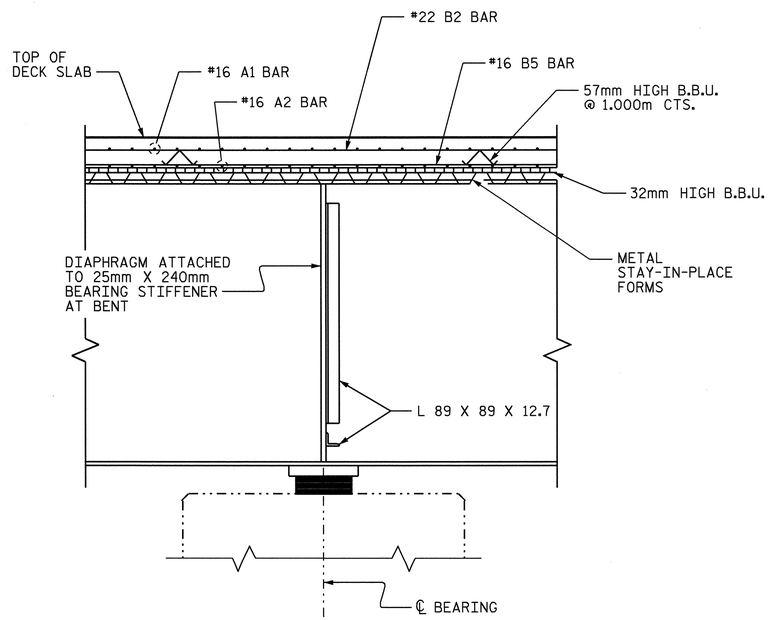

SECTION AT BENT

NORTH CAROLINA PROFESSIONAL SEAL 23926 ENGINEER BRIAN C. HANKS
11/9/06

PROJECT NO. R-0609IA

GUILFORD COUNTY

STATION: 52+13.020 -L-

SHEET 2 OF 2

STATE OF NORTH CAROLINA
DEPARTMENT OF TRANSPORTATION
RALEIGH

SUPERSTRUCTURE

TYPICAL SECTION DETAILS

(SOUTHBOUND LANE)

REVISIONS						SHEET NO.
NO.	BY:	DATE:	NO.	BY:	DATE:	S-143
1			3			TOTAL SHEETS
2			4			321

STR. #5

DRAWN BY : D. G. ELY DATE : 2/23/05
CHECKED BY : A. B. NAIK DATE : 4/05

09-NOV-2006 14:06
R:\Structures\frye\FINAL_PLANS\Str5\R0609IA_sd_TS_STR.5.dgn
bhanks

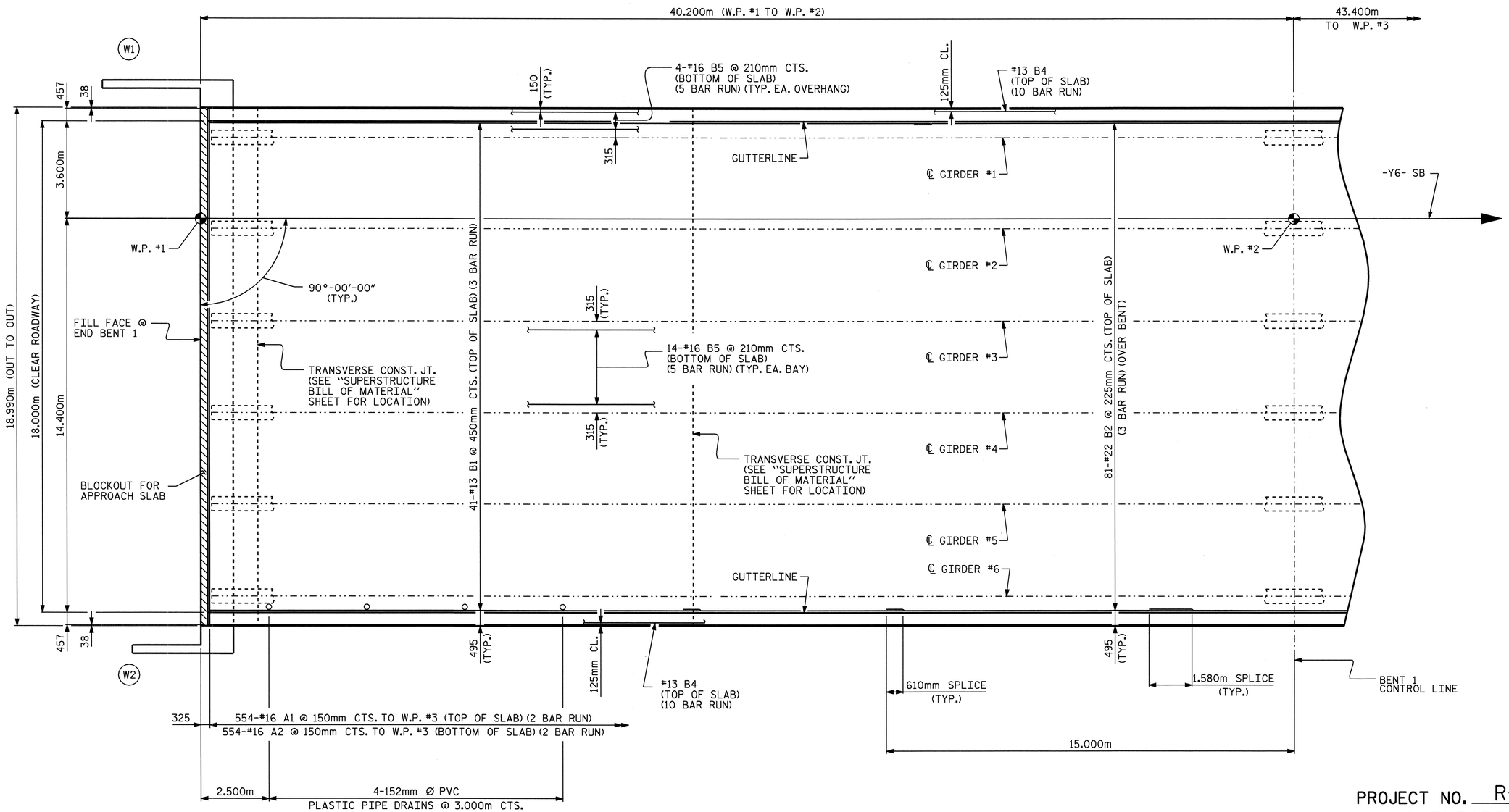

PLAN OF SPAN "A"

NOTES:

FOR BARRIER RAIL REINFORCING STEEL AND DETAILS, SEE "CONCRETE BARRIER RAIL" SHEET.

FOR REINFORCING STEEL IN ABUTMENTS, SEE "PLAN OF SPAN DETAILS" SHEETS.

PROJECT NO. R-0609IA

GUILFORD COUNTY

STATION: 52+13.020 -L-

SHEET 1 OF 5

STATE OF NORTH CAROLINA
DEPARTMENT OF TRANSPORTATION
RALEIGH

SUPERSTRUCTURE

PLAN OF SPANS
SPAN A
(SOUTHBOUND LANE)

REVISIONS						SHEET NO.
NO.	BY:	DATE:	NO.	BY:	DATE:	S-144
1			3			TOTAL SHEETS
2			4			321

NORTH CAROLINA PROFESSIONAL SEAL 23926 ENGINEER BRIAN C. HANKS
5/22/06

DRAWN BY : D. G. ELY DATE : 2/24/05
CHECKED BY : A. B. NAIK DATE : 4/05

15-MAY-2006 15:40
G:\STRUCT~1\frye\FINAL_~1\Str5\ROE606~1.DGN
dely

STR. #5

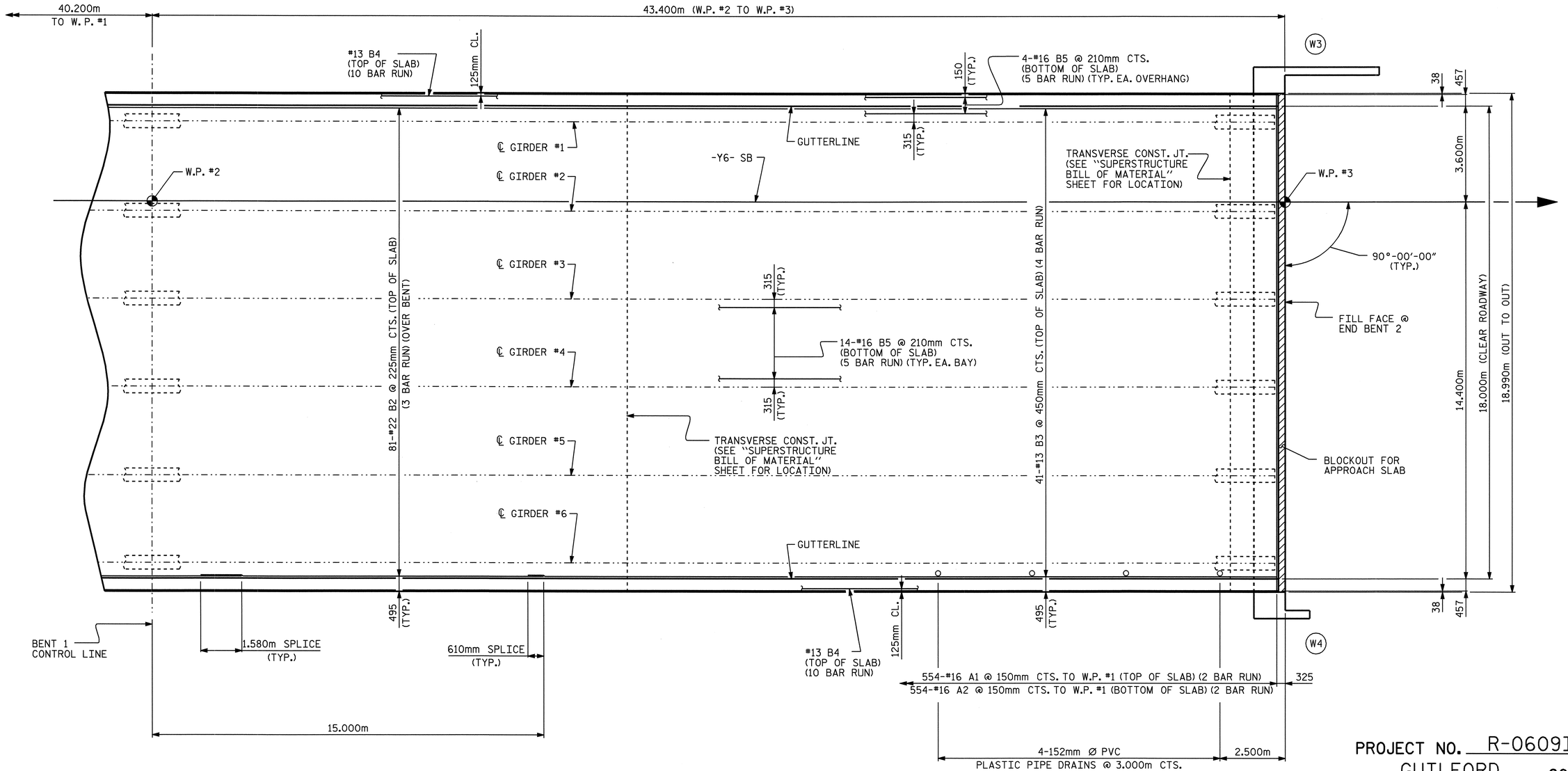

PLAN OF SPAN "B"

NOTES:

FOR BARRIER RAIL REINFORCING STEEL AND DETAILS, SEE "CONCRETE BARRIER RAIL" SHEET.

FOR REINFORCING STEEL IN ABUTMENTS, SEE "PLAN OF SPAN DETAILS" SHEETS.

NORTH CAROLINA PROFESSIONAL SEAL 23926 ENGINEER BRIAN C. HANKS
5/22/06

PROJECT NO. R-0609IA
GUILFORD COUNTY
STATION: 52+13.020 -L-

SHEET 2 OF 5

STATE OF NORTH CAROLINA
DEPARTMENT OF TRANSPORTATION
RALEIGH

SUPERSTRUCTURE

PLAN OF SPANS
SPAN B
(SOUTHBOUND LANE)

REVISIONS						SHEET NO.
NO.	BY:	DATE:	NO.	BY:	DATE:	S-145
1			3			TOTAL SHEETS
2			4			321

DRAWN BY : D. G. ELY DATE : 2/24/05
CHECKED BY : A. B. NAIK DATE : 4/05

15-MAY-2006 15:40
G:\STRUCT~1\frye\FINAL_~1\Str5\ROE606~1.DGN
dely

STR. #5

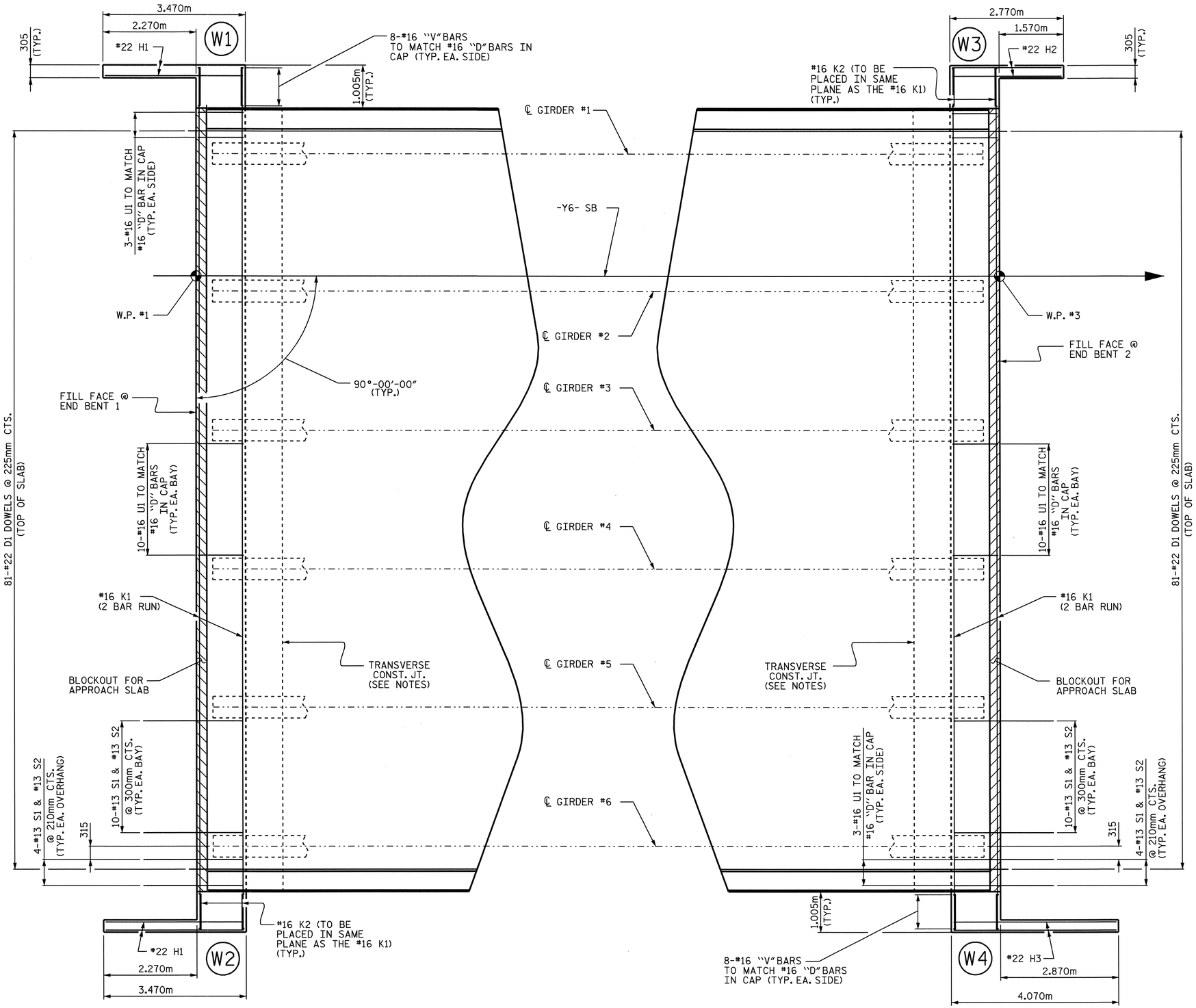

PLAN OF ABUTMENT WALL @ END BENT 1

PLAN OF ABUTMENT WALL @ END BENT 2

NOTES:

FOR SECTION THROUGH ABUTMENT, SEE "TYPICAL SECTION DETAILS" SHEET 2 OF 2.

FOR TRANSVERSE CONSTRUCTION JOINT DETAILS AND LOCATION, SEE "SUPERSTRUCTURE - BILL OF MATERIAL" SHEET.

PROJECT NO. R-0609IA

GUILFORD COUNTY

STATION: 52+13.020 -L-

SHEET 3 OF 5

STATE OF NORTH CAROLINA
DEPARTMENT OF TRANSPORTATION
RALEIGH

SUPERSTRUCTURE

PLAN OF SPANS

DETAILS

(SOUTHBOUND LANE)

REVISIONS						SHEET NO.
NO.	BY:	DATE:	NO.	BY:	DATE:	S-146
1			3			TOTAL SHEETS
2			4			321

STR. #5

NORTH CAROLINA PROFESSIONAL SEAL 23926 ENGINEER BRIAN C. HANKS
11/9/06

DRAWN BY : D. G. ELY DATE : 2/24/05
CHECKED BY : A. B. NAIK DATE : 4/05

09-NOV-2006 14:07
R:\Structures\frye\FINAL_PLANS\Str5\R0609IA_sd_S*_STR.5.dgn
bhanks

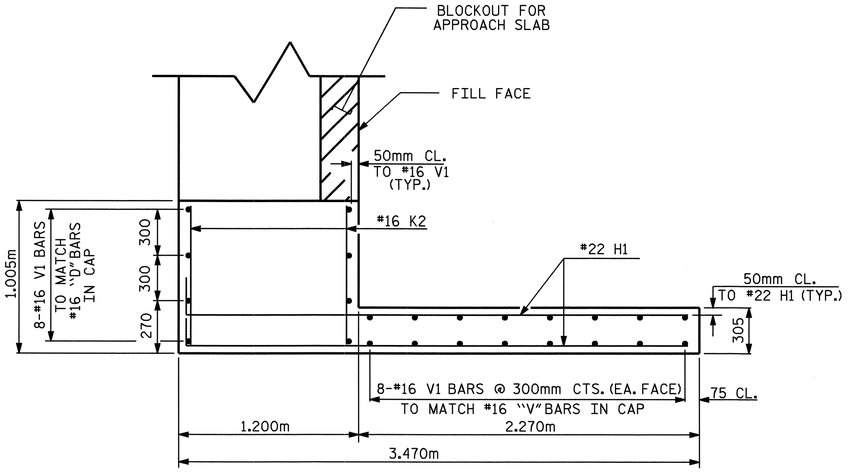

PLAN - W1

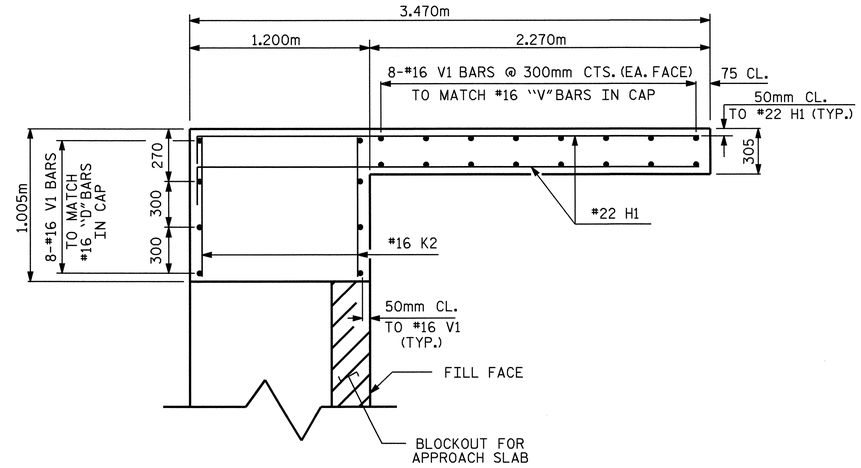

PLAN - W2

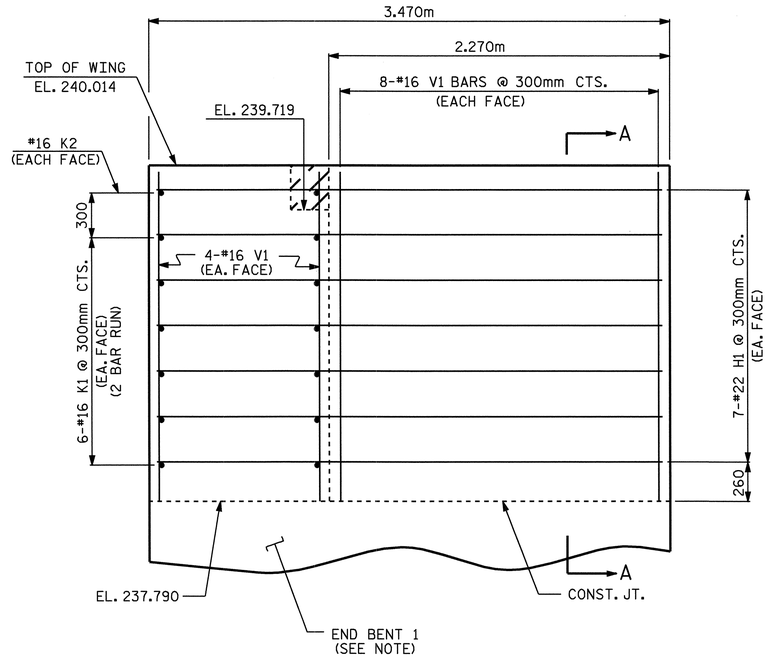

ELEVATION - W1

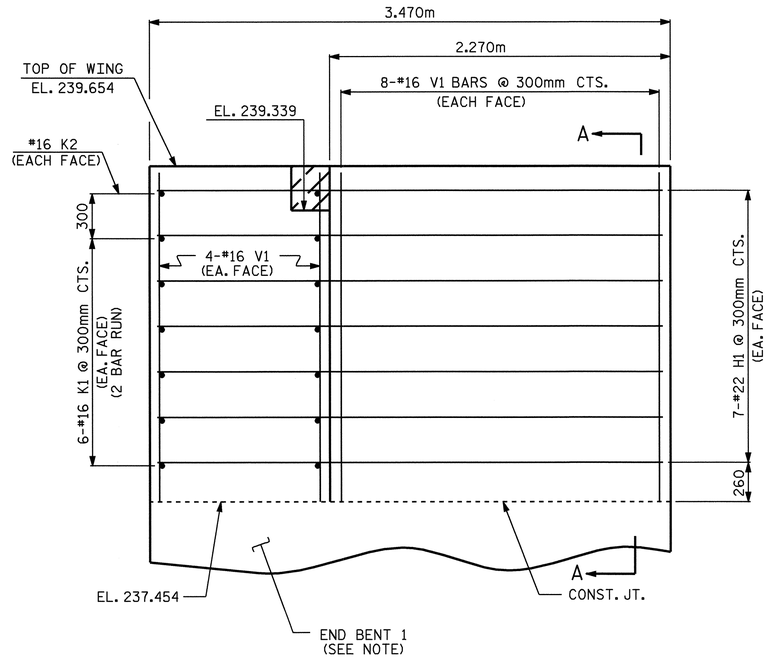

ELEVATION - W2

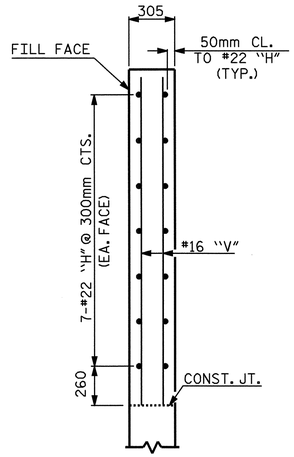

SECTION A-A

ABUTMENT WINGS @ END BENT 1

NOTE: FOR END BENT 1 REINFORCING STEEL AND DETAILS, SEE "SUBSTRUCTURE, END BENT 1" SHEETS.

DRAWN BY : D. G. ELY DATE : 4/4/05
CHECKED BY : A. B. NAIK DATE : 4/5/05

15-MAY-2006 15:39
G:\STRUCT~1\frye\FINAL_~1\Str5\ROE606~1.DGN
dely

PROJECT NO. R-0609IA
GUILFORD COUNTY
STATION: 52+13.020 -L-

SHEET 4 OF 5

STATE OF NORTH CAROLINA
DEPARTMENT OF TRANSPORTATION
RALEIGH

SUPERSTRUCTURE

PLAN OF SPANS DETAILS
(SOUTHBOUND LANE)

REVISIONS						SHEET NO.
NO.	BY:	DATE:	NO.	BY:	DATE:	S-147
1			3			TOTAL SHEETS
2			4			321

STR. #5

NORTH CAROLINA PROFESSIONAL SEAL 23926 ENGINEER BRIAN C. HAWKS
5/22/06

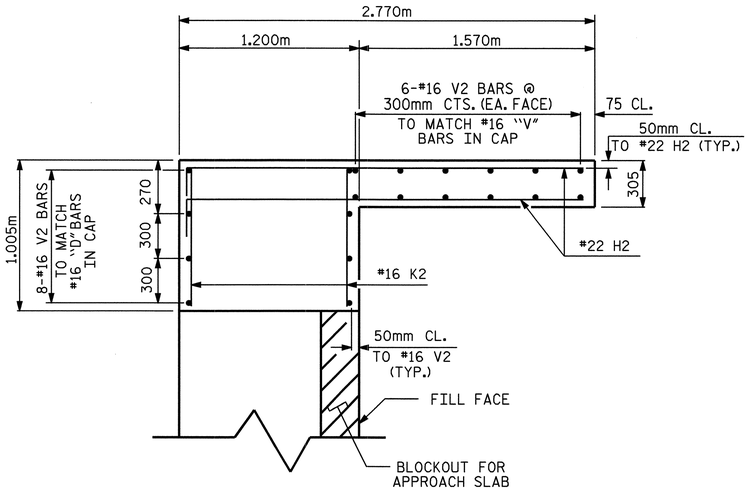

PLAN - W3

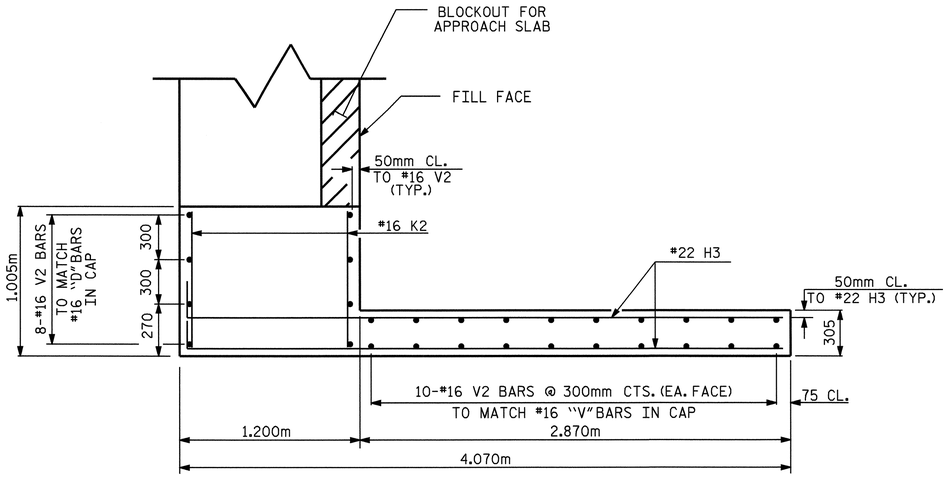

PLAN - W4

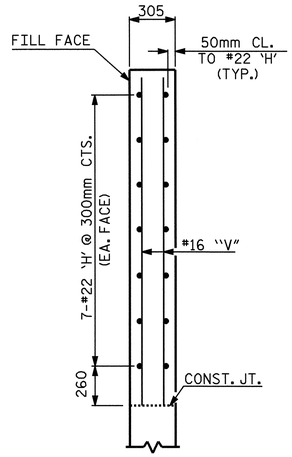

SECTION A-A

ELEVATION - W3

ELEVATION - W4

ABUTMENT WINGS @ END BENT 2

NOTE: FOR END BENT 2 REINFORCING STEEL AND DETAILS, SEE "SUBSTRUCTURE, END BENT 2" SHEETS.

NORTH CAROLINA PROFESSIONAL SEAL 23926 ENGINEER BRIAN C. HANKS
5/22/06

PROJECT NO. R-0609IA
GUILFORD COUNTY
STATION: 52+13.020 -L-

SHEET 5 OF 5

STATE OF NORTH CAROLINA
DEPARTMENT OF TRANSPORTATION
RALEIGH

SUPERSTRUCTURE
PLAN OF SPANS DETAILS
(SOUTHBOUND LANE)

REVISIONS						SHEET NO.
NO.	BY:	DATE:	NO.	BY:	DATE:	S-148
1			3			TOTAL SHEETS
2			4			321

STR. #5

DRAWN BY : D. G. ELY DATE : 4/4/05
CHECKED BY : A. B. NAIK DATE : 4/5/05

15-MAY-2006 15:39
G:\STRUCT~1\frye\FINAL_~1\Str5\ROE606~1.DGN
dely

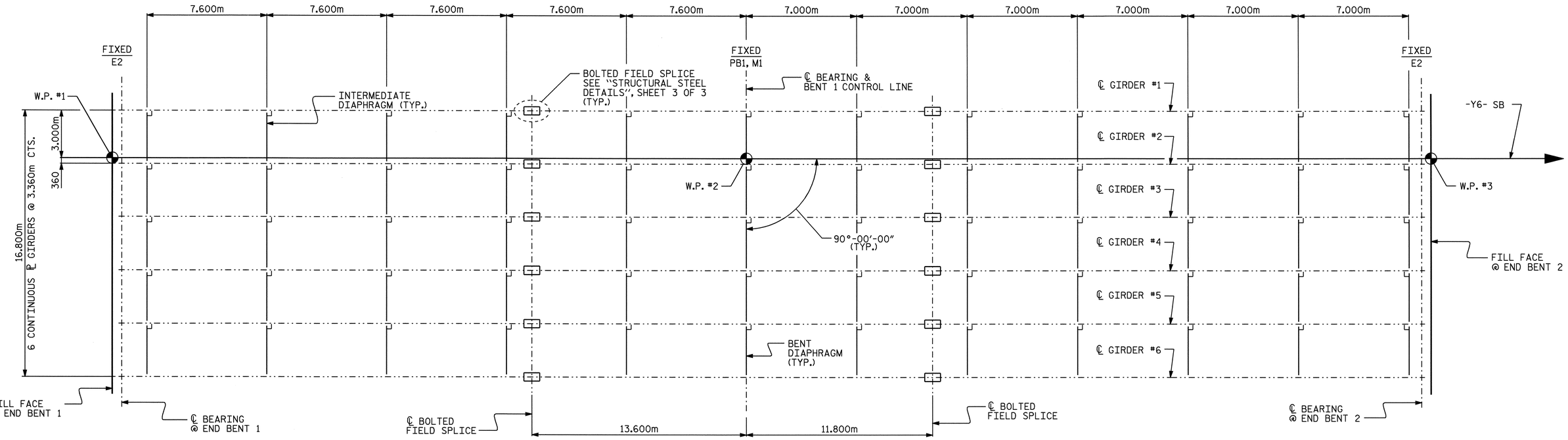

SPAN "A"

FRAMING PLAN

SPAN "B"

PROJECT NO. R-0609IA

GUILFORD COUNTY

STATION: 52+13.020 -L-

STATE OF NORTH CAROLINA
DEPARTMENT OF TRANSPORTATION
RALEIGH

SUPERSTRUCTURE

FRAMING PLAN

(SOUTHBOUND LANE)

NORTH CAROLINA PROFESSIONAL SEAL 23926 ENGINEER BRIAN C. HANKS
5/22/06

REVISIONS						SHEET NO.
NO.	BY:	DATE:	NO.	BY:	DATE:	S-149
1			3			TOTAL SHEETS
2			4			321

STR. #5

DRAWN BY : D. G. ELY DATE : 2/25/05
CHECKED BY : A. B. NAIK DATE : 4/05

15-MAY-2006 15:38
G:\STRUCT~1\frye\FINAL_~1\Str5\RO6D52~1.DGN
dely

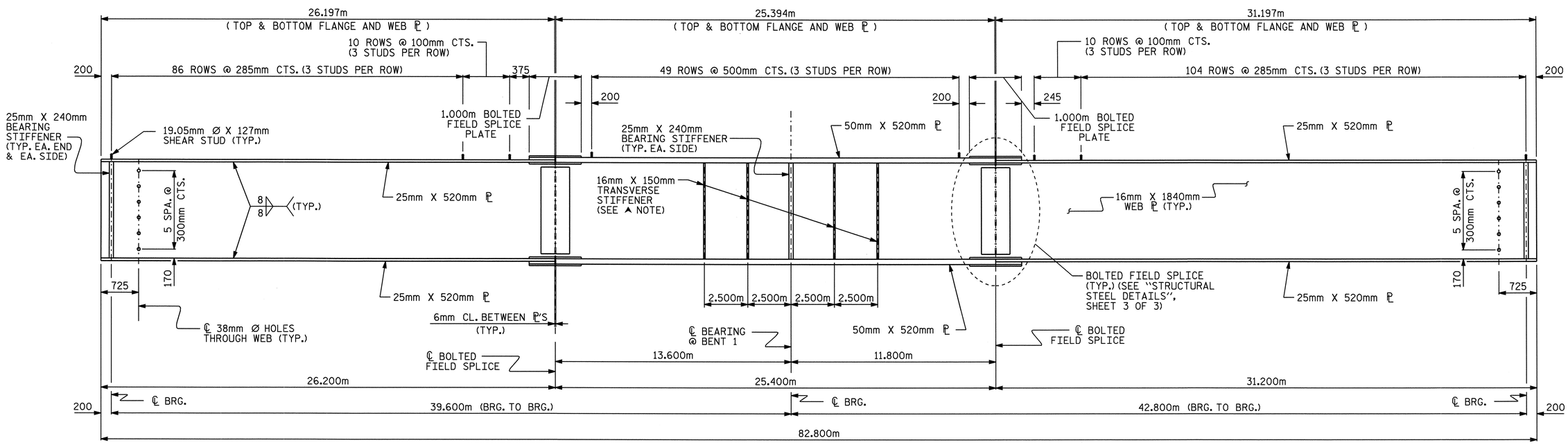

ELEVATION OF GIRDER

▲ NOTE:
TRANSVERSE STIFFENERS ARE TO BE PLACED ON ONE SIDE OF GIRDERS ONLY. TRANSVERSE STIFFENERS ARE NOT TO BE PLACED ON THE OUTSIDE OF EXTERIOR GIRDERS.

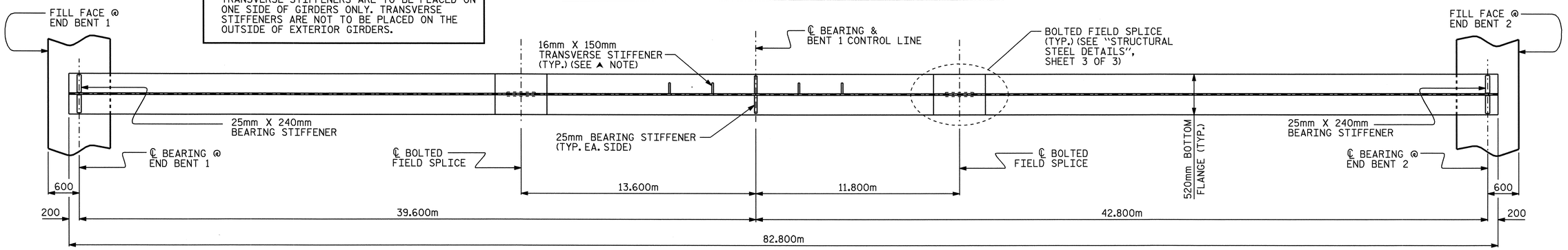

BOTTOM FLANGE DETAIL

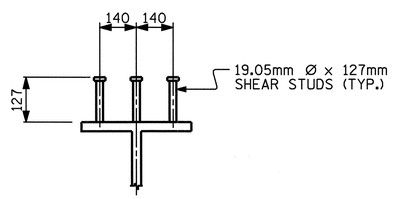

SHEAR STUD DETAILS

(TYP. EA. GIRDER)

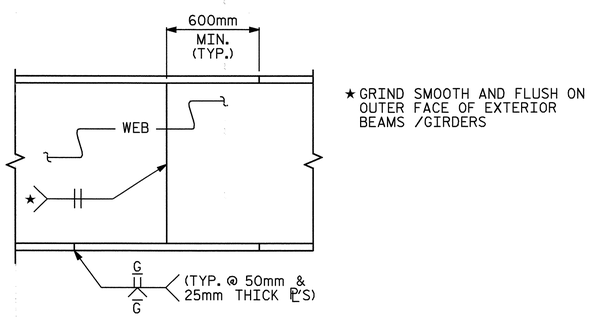

PERMISSIBLE SHOP FLANGE AND WEB SPLICE

PROJECT NO. R-0609IA

GUILFORD COUNTY

STATION: 52+13.020 -L-

SHEET 1 OF 3

STATE OF NORTH CAROLINA
DEPARTMENT OF TRANSPORTATION
RALEIGH

SUPERSTRUCTURE
STRUCTURAL STEEL DETAILS
(SOUTHBOUND LANE)

REVISIONS						SHEET NO.
NO.	BY:	DATE:	NO.	BY:	DATE:	S-150
1			3			TOTAL SHEETS
2			4			321

NORTH CAROLINA PROFESSIONAL SEAL 23926 ENGINEER BRIAN C. HANKS
5/22/06

DRAWN BY : D. G. ELY DATE : 2/25/05
CHECKED BY : A. B. NAIK DATE : 4/05

15-MAY-2006 15:38
G:\STRUCT~1\frye\FINAL_~1\Str5\ROEEI6~1.DGN
dely

STR. #5

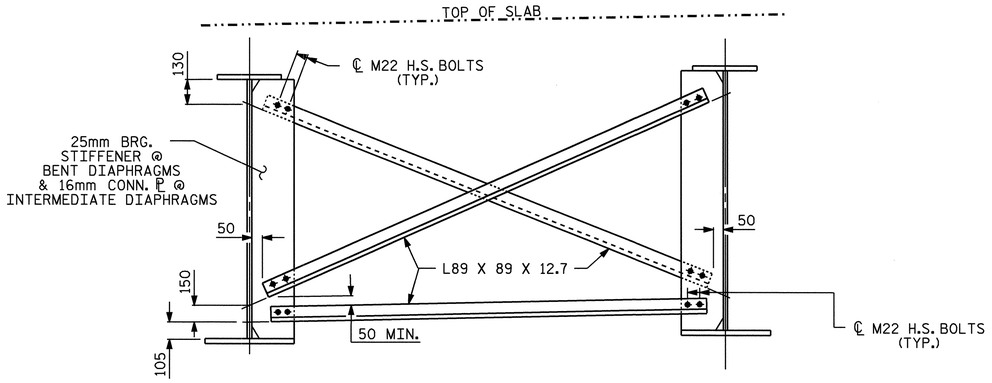

TYPICAL BENT & INTERMEDIATE DIAPHRAGM

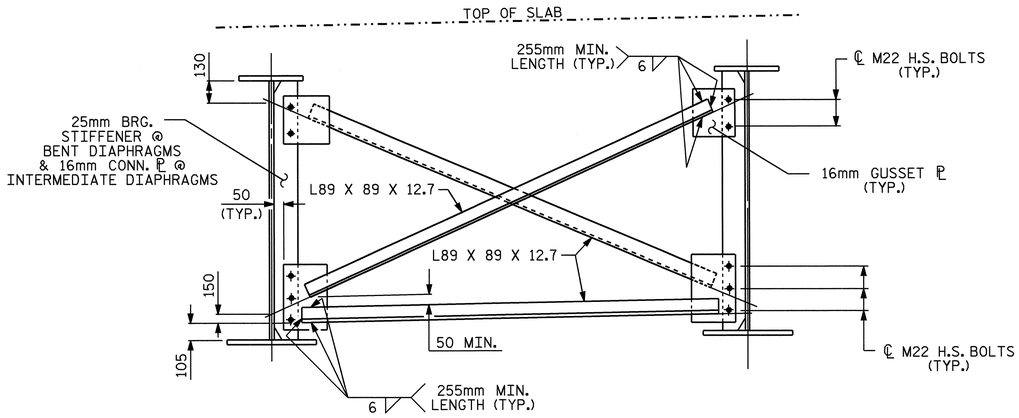

OPTIONAL BENT & INTERMEDIATE DIAPHRAGM

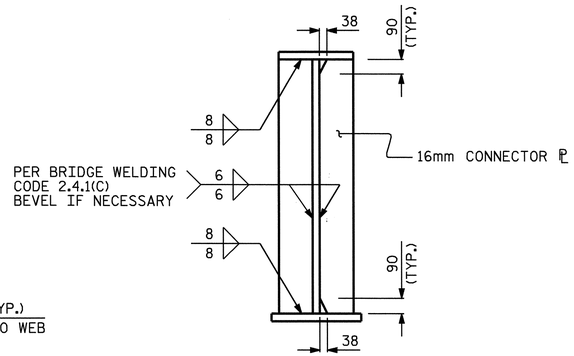

CONNECTOR ℙ

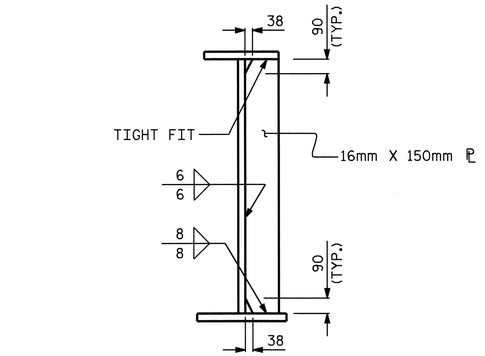

TRANSVERSE STIFFENER

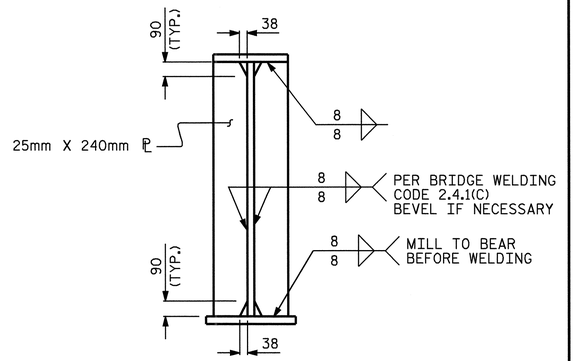

BEARING STIFFENER

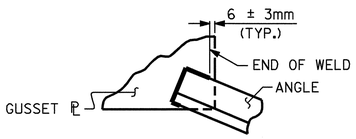

TYPICAL ANGLE TO GUSSET PLATE CONNECTIONS

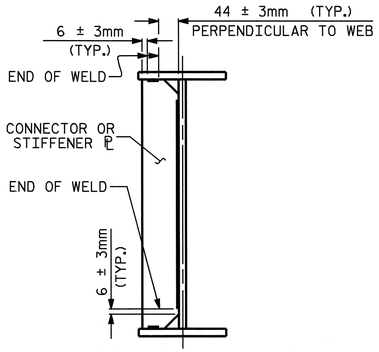

TYPICAL STIFFENER OR CONNECTOR PLATE CONNECTIONS

WELD TERMINATION DETAILS

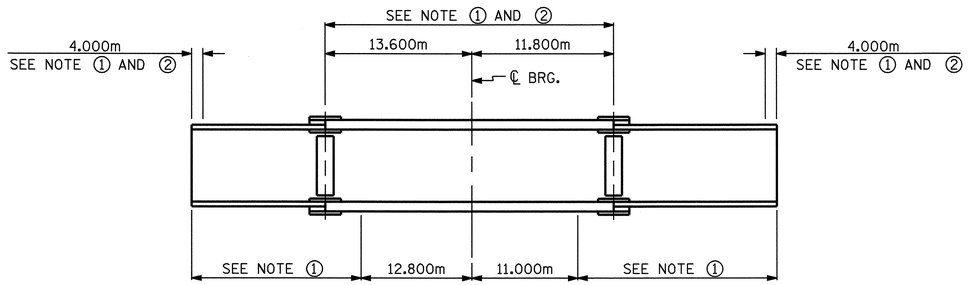

NOTE ① : CHARPY V-NOTCH TESTS ARE REQUIRED FOR ALL TOP OR BOTTOM FLANGE PLATES WHICH FALL WITHIN THESE LIMITS, ALL WEB PLATES, AND ALL SPLICE PLATES. IF A PERMITTED SHOP FLANGE SPLICE IS NOT USED, CHARPY V-NOTCH TESTS WILL BE REQUIRED FOR THE ENTIRE FLANGE PLATE. FOR CHARPY V-NOTCH TESTS, SEE ARTICLE 1072-9 OF THE STANDARD SPECIFICATIONS.

NOTE ② : NO WELDING OF FORMS OR FALSEWORK TO THE TOP FLANGE WILL BE PERMITTED IN THIS REGION.

CHARPY V-NOTCH TESTS FOR CONTINUOUS PLATE GIRDERS

NORTH CAROLINA PROFESSIONAL SEAL 23926 ENGINEER BRIAN C. HANKS
5/22/06

PROJECT NO. R-0609IA
GUILFORD COUNTY
STATION: 52+13.020 -L-

SHEET 2 OF 3

STATE OF NORTH CAROLINA
DEPARTMENT OF TRANSPORTATION
RALEIGH

SUPERSTRUCTURE

STRUCTURAL STEEL DETAILS

(SOUTHBOUND LANE)

REVISIONS						SHEET NO.
NO.	BY:	DATE:	NO.	BY:	DATE:	S-151
1			3			TOTAL SHEETS
2			4			321

DRAWN BY : D. G. ELY DATE : 2/25/05
CHECKED BY : A. B. NAIK DATE : 4/05

15-MAY-2006 15:38
G:\STRUCT~1\frye\FINAL_~1\Str5\ROEEI6~1.DGN
dely

STR. #5

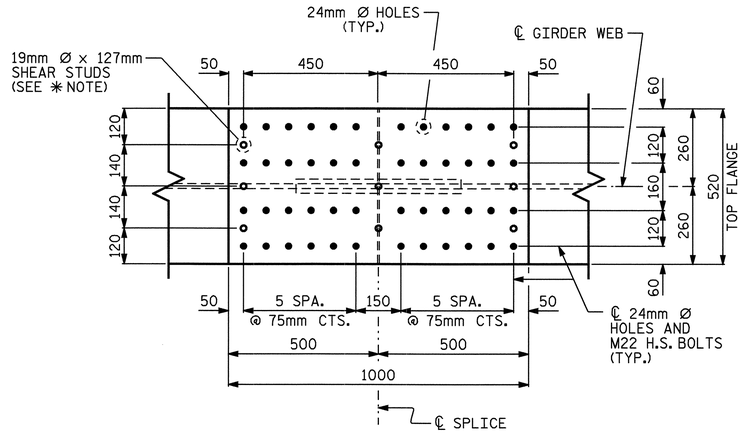

PLAN (TOP OF TOP FLANGE)

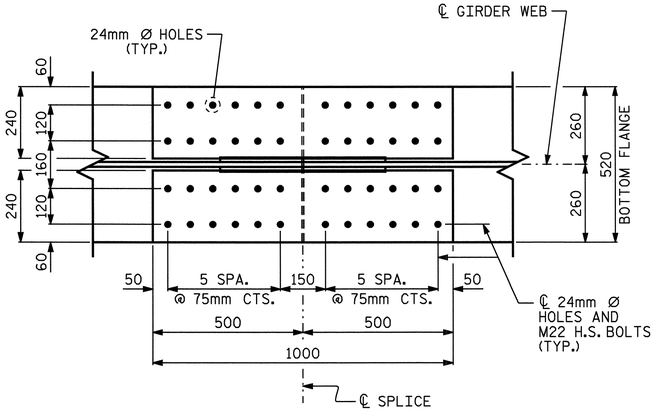

PLAN (TOP OF BOTTOM FLANGE)

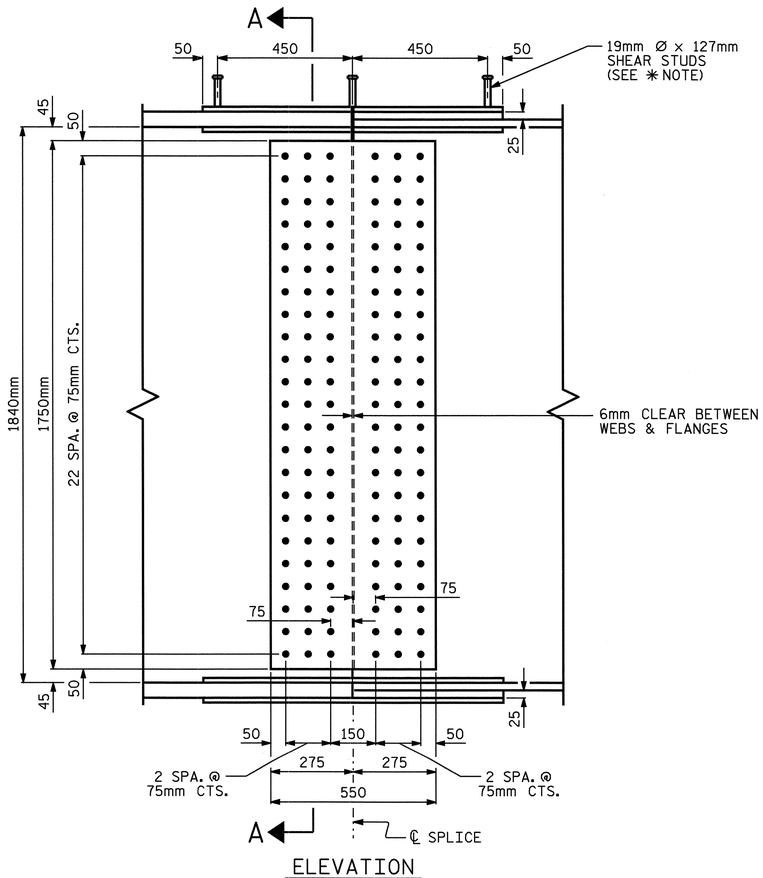

ELEVATION

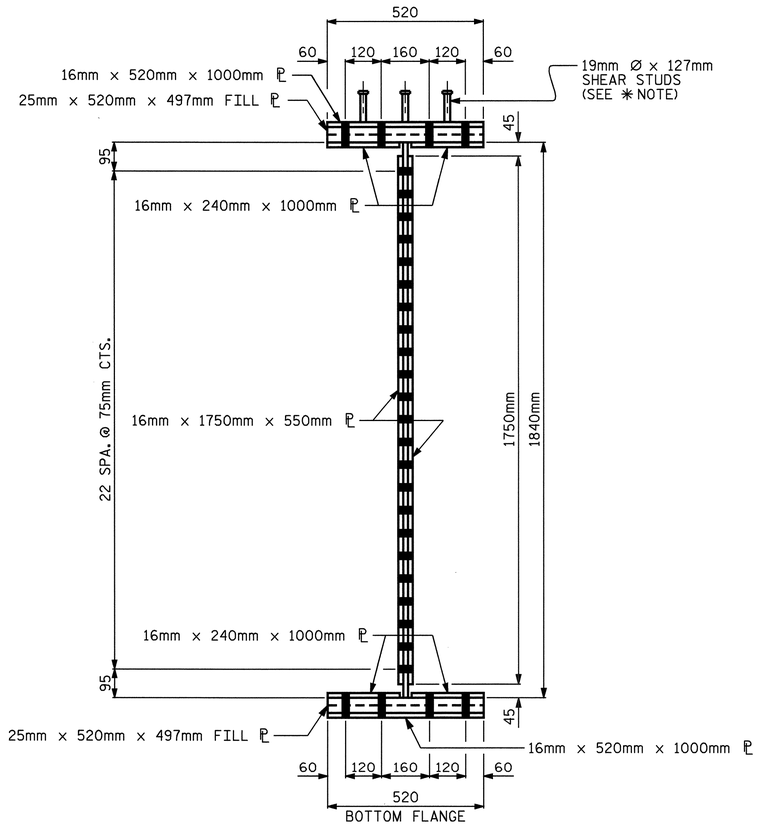

SECTION A-A

BOLTED FIELD SPLICE DETAILS

(TYPICAL EACH FIELD SPLICE)

NOTES:

ALL STRUCTURAL STEEL SHALL BE AASHTO M270 GRADE 345W AND PAINTED IN ACCORDANCE WITH SYSTEM 4 OF ARTICLE 442-7 OF THE STANDARD SPECIFICATIONS UNLESS OTHERWISE NOTED ON THE PLANS.

ALL DIMENSIONS SHOWN ARE HORIZONTAL OR VERTICAL, UNLESS OTHERWISE NOTED.

ALL FIELD CONNECTIONS TO BE 22.23mm HIGH STRENGTH BOLTS UNLESS OTHERWISE NOTED.

BEARING STIFFENERS ARE TO BE PLACED NORMAL TO THE WEB OF THE GIRDER AND SHALL BE PLUMB.

CHARPY V-NOTCH TEST IS REQUIRED, SEE SHEET 2 OF 3.

SHOP SPLICES ARE PERMITTED TO LIMIT THE MAXIMUM REQUIRED FLANGE PIECE LENGTHS TO 18 METERS AND WEB PIECE LENGTHS TO 14 METERS. PERMITTED FLANGE AND WEB SHOP SPLICES SHALL NOT BE LOCATED WITHIN 4.5 METERS OF MAXIMUM DEAD LOAD DEFLECTION NOR WITHIN 4.5 METERS OF INTERMEDIATE BEARINGS OF CONTINUOUS UNITS. KEEP 600mm MINIMUM BETWEEN WEB AND FLANGE SHOP SPLICES. KEEP 150mm MINIMUM BETWEEN CONNECTOR PLATE OR TRANSVERSE STIFFENER WELDS AND WEB OR FLANGE SHOP SPLICES.

STUDS ON GIRDERS MAY BE SHIFTED UP TO 25mm IF NECESSARY TO CLEAR FLANGE SPLICE WELD.

END OF GIRDERS SHALL BE PLUMB.

✳ SHEAR STUDS ARE TO BE SHOP WELDED ON TOP OF PLATE BEFORE FIELD ASSEMBLY.

AT THE CONTRACTOR'S OPTION, THE DIAPHRAGM WITH THE WELDED GUSSET PLATES MAY BE USED IN LIEU OF THE DIAPHRAGM WITH BOLTED ANGLES AT NO ADDITIONAL COST TO THE DEPARTMENT.

TENSION ON THE AASHTO M164 BOLTS SHALL BE CALIBRATED USING DIRECT TENSION INDICATOR WASHERS IN ACCORDANCE WITH ARTICLE 440-10 OF THE STANDARD SPECIFICATIONS.

BEARING STIFFENER MAY REQUIRE COPING IF WIDER THAN BOTTOM FLANGE TO AVOID INTERFERENCE WITH THE ANCHOR BOLT.

TRANSVERSE STIFFENERS SHALL NOT BE PLACED ON THE OUTSIDE OF EXTERIOR GIRDERS.

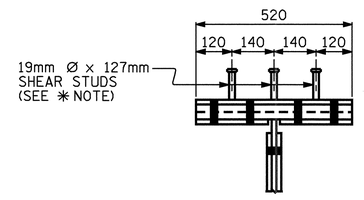

SHEAR STUD DETAIL FOR TOP FLANGE SPLICE PLATE

PROJECT NO. R-0609IA

GUILFORD COUNTY

STATION: 52+13.020 -L-

SHEET 3 OF 3

STATE OF NORTH CAROLINA
DEPARTMENT OF TRANSPORTATION
RALEIGH

SUPERSTRUCTURE

STRUCTURAL STEEL DETAILS

(SOUTHBOUND LANE)

REVISIONS						SHEET NO.
NO.	BY:	DATE:	NO.	BY:	DATE:	S-152
1			3			TOTAL SHEETS
2			4			321

NORTH CAROLINA PROFESSIONAL SEAL 23926 ENGINEER BRIAN C. HANKS
5/22/06

DRAWN BY : D. G. ELY DATE : 2/25/05
CHECKED BY : A. B. NAIK DATE : 4/05

STR. #5

NOTES

FOR ELASTOMERIC BEARINGS, SEE SPECIAL PROVISIONS.

— LOAD RATINGS —	
	MAX.D.L.+L.L.
TYPE III	512 kN

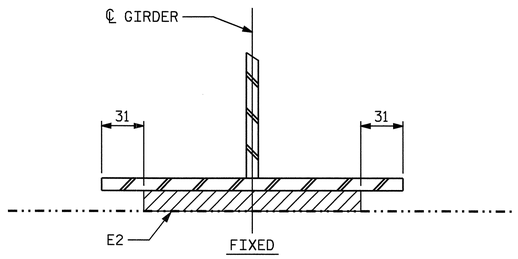

SECTION

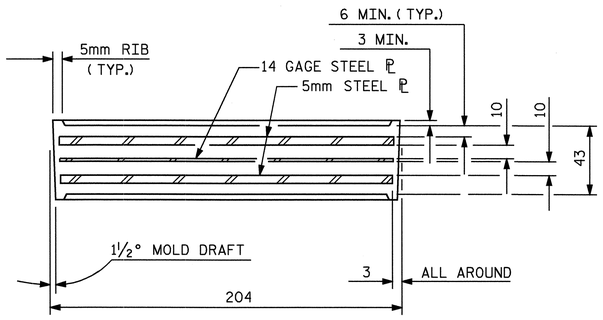

TYPICAL SECTION OF ELASTOMERIC BEARINGS

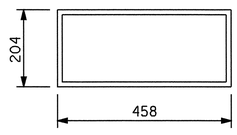

E2 (12 REQ'D)

PLAN VIEW OF ELASTOMERIC BEARING

TYPE III

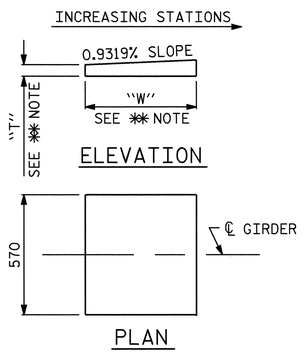

ELEVATION

PLAN

✱✱ NOTE:
DIMENSIONS "W" AND "T" ARE TO BE DETERMINED BY THE MANUFACTURER.

SOLE PLATE DETAILS

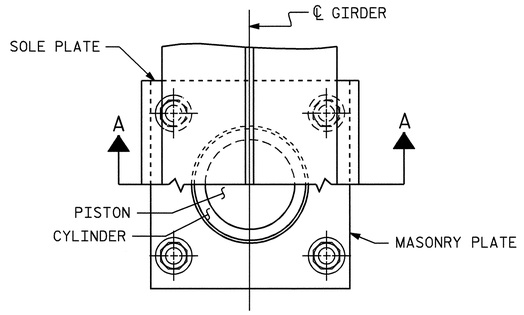

CUT-AWAY PLAN

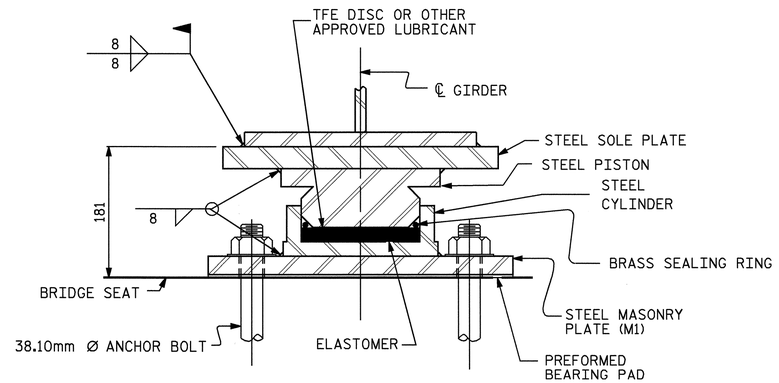

SECTION A-A

PB1, FIXED
(6 REQ'D.)

POT BEARING DETAILS

NOTES

FOR POT BEARINGS, SEE SPECIAL PROVISIONS.

AT ALL POINTS OF SUPPORT, NUTS FOR ANCHOR BOLTS SHALL BE TIGHTENED FINGER TIGHT AND GIVEN AN ADDITIONAL ¼ TURN. THE THREAD OF THE NUT AND BOLT SHALL THEN BE BURRED WITH A SHARP POINTED TOOL.

WHEN WELDING THE SOLE PLATE TO THE GIRDER, USE TEMPERATURE INDICATING WAX PENS, OR OTHER SUITABLE MEANS, TO ENSURE THAT THE TEMPERATURE OF THE BEARING DOES NOT EXCEED 121°C TEMPERATURES ABOVE THIS MAY DAMAGE THE TFE OR ELASTOMER.

ALL SURFACES OF BEARING PLATES SHALL BE SMOOTH AND STRAIGHT.

FOR THERMAL SPRAYED COATINGS (METALLIZATION), SEE SPECIAL PROVISIONS.

THE CONTRACTOR MAY SUBSTITUTE DISC BEARINGS FOR THE POT BEARINGS SHOWN. FOR OPTIONAL DISC BEARINGS, SEE SPECIAL PROVISIONS.

SOLE PLATES SHALL BE WELDED TO THE GIRDER FLANGES BEFORE FALSEWORK IS PLACED.

TABLE FOR LOADS					
BEARING	LOCATION	VERTICAL LOAD (kN)			LATERAL LOAD (kN)
		DEAD	LIVE	TOTAL	
PB1 (FIXED)	BENT 1	1730	620	2350	346

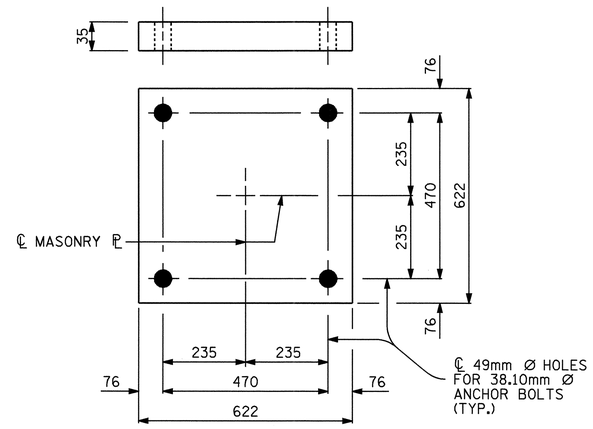

PLAN
M1 (6 REQ'D.)

MASONRY PLATE DETAILS

PROJECT NO. R-0609IA
GUILFORD COUNTY
STATION: 52+13.020 -L-

STATE OF NORTH CAROLINA
DEPARTMENT OF TRANSPORTATION
RALEIGH

SUPERSTRUCTURE

BEARING DETAILS

(SOUTHBOUND LANE)

NORTH CAROLINA PROFESSIONAL SEAL 23926 ENGINEER BRIAN C. HAWKS
5/22/06

REVISIONS						SHEET NO.
NO.	BY:	DATE:	NO.	BY:	DATE:	S-153
1			3			TOTAL SHEETS
2			4			321

DRAWN BY : D. G. ELY DATE : 2/25/05
CHECKED BY : A. B. NAIK DATE : 4/05

15-MAY-2006 15:37
G:\STRUCT~1\frye\FINAL_~1\Str5\R0609I~4.DGN
dely

STR. #5

DEAD LOAD DEFLECTION TABLE FOR GIRDERS

GIRDER #1

	SPAN "A"																					SPAN "B"																						
TWENTIETH POINTS	BRG.	.05	.10	.15	.20	.25	.30	.35	.40	.45	.50	.55	.60	.65	.70	.75	.80	.85	.90	.95	BRG.	.05	.10	.15	.20	.25	.30	.35	.40	.45	.50	.55	.60	.65	.70	.75	.80	.85	.90	.95	BRG.
DEFLECTION DUE TO WEIGHT OF GIRDER	0.000	0.002	0.003	0.005	0.006	0.007	0.008	0.008	0.009	0.008	0.008	0.007	0.006	0.005	0.004	0.003	0.002	0.001	0.000	0.000	0.000	0.001	0.002	0.003	0.005	0.006	0.008	0.010	0.011	0.012	0.013	0.014	0.014	0.014	0.013	0.012	0.010	0.008	0.005	0.003	0.000
DEFLECTION DUE TO WEIGHT OF SLAB *	0.000	0.006	0.012	0.017	0.021	0.024	0.026	0.028	0.028	0.028	0.025	0.023	0.021	0.017	0.013	0.009	0.005	0.003	0.001	0.000	0.000	0.002	0.005	0.011	0.016	0.022	0.029	0.035	0.040	0.045	0.049	0.050	0.051	0.049	0.046	0.041	0.035	0.027	0.020	0.009	0.000
DEFLECTION DUE TO WEIGHT OF RAIL	0.000	0.000	0.001	0.001	0.001	0.002	0.002	0.002	0.002	0.002	0.002	0.002	0.001	0.001	0.001	0.001	0.001	0.000	0.000	0.000	0.000	0.000	0.001	0.001	0.001	0.002	0.002	0.002	0.003	0.003	0.003	0.003	0.003	0.003	0.003	0.003	0.002	0.002	0.001	0.001	0.000
TOTAL DEAD LOAD DEFLECTION	0.000	0.008	0.016	0.023	0.028	0.033	0.036	0.038	0.039	0.038	0.035	0.032	0.028	0.023	0.018	0.013	0.008	0.004	0.001	0.000	0.000	0.003	0.008	0.015	0.022	0.030	0.039	0.047	0.054	0.060	0.065	0.067	0.068	0.066	0.062	0.056	0.047	0.037	0.026	0.013	0.000
REQUIRED CAMBER	0	8	16	23	28	33	36	38	39	38	35	32	28	23	18	13	8	4	1	0	0	3	8	15	22	30	39	47	54	60	65	67	68	66	62	56	47	37	26	13	0

GIRDERS #2, #3, #4, & #5

	SPAN "A"																					SPAN "B"																						
TWENTIETH POINTS	BRG.	.05	.10	.15	.20	.25	.30	.35	.40	.45	.50	.55	.60	.65	.70	.75	.80	.85	.90	.95	BRG.	.05	.10	.15	.20	.25	.30	.35	.40	.45	.50	.55	.60	.65	.70	.75	.80	.85	.90	.95	BRG.
DEFLECTION DUE TO WEIGHT OF GIRDER	0.000	0.002	0.003	0.005	0.006	0.007	0.008	0.008	0.009	0.008	0.008	0.007	0.006	0.005	0.004	0.003	0.002	0.001	0.000	0.000	0.000	0.001	0.002	0.003	0.005	0.006	0.008	0.010	0.011	0.012	0.013	0.014	0.014	0.014	0.013	0.012	0.010	0.008	0.005	0.003	0.000
DEFLECTION DUE TO WEIGHT OF SLAB *	0.000	0.007	0.014	0.019	0.025	0.028	0.031	0.033	0.032	0.032	0.030	0.027	0.024	0.019	0.015	0.010	0.006	0.003	0.001	0.000	0.000	0.002	0.006	0.012	0.019	0.026	0.034	0.041	0.047	0.053	0.057	0.058	0.059	0.057	0.053	0.047	0.041	0.032	0.023	0.011	0.000
DEFLECTION DUE TO WEIGHT OF RAIL	0.000	0.000	0.001	0.001	0.001	0.002	0.002	0.002	0.002	0.002	0.002	0.002	0.001	0.001	0.001	0.001	0.001	0.000	0.000	0.000	0.000	0.000	0.001	0.001	0.001	0.002	0.002	0.002	0.003	0.003	0.003	0.003	0.003	0.003	0.003	0.003	0.002	0.002	0.001	0.001	0.000
TOTAL DEAD LOAD DEFLECTION	0.000	0.009	0.018	0.025	0.032	0.037	0.041	0.043	0.043	0.042	0.040	0.036	0.031	0.025	0.020	0.014	0.009	0.004	0.001	0.000	0.000	0.003	0.009	0.016	0.025	0.034	0.044	0.053	0.061	0.068	0.073	0.075	0.076	0.074	0.069	0.062	0.053	0.042	0.029	0.015	0.000
REQUIRED CAMBER	0	9	18	25	32	37	41	43	43	42	40	36	31	25	20	14	9	4	1	0	0	3	9	16	25	34	44	53	61	68	73	75	76	74	69	62	53	42	29	15	0

GIRDER #6

	SPAN "A"																					SPAN "B"																						
TWENTIETH POINTS	BRG.	.05	.10	.15	.20	.25	.30	.35	.40	.45	.50	.55	.60	.65	.70	.75	.80	.85	.90	.95	BRG.	.05	.10	.15	.20	.25	.30	.35	.40	.45	.50	.55	.60	.65	.70	.75	.80	.85	.90	.95	BRG.
DEFLECTION DUE TO WEIGHT OF GIRDER	0.000	0.002	0.003	0.005	0.006	0.007	0.008	0.008	0.009	0.008	0.008	0.007	0.006	0.005	0.004	0.003	0.002	0.001	0.000	0.000	0.000	0.001	0.002	0.003	0.005	0.006	0.008	0.010	0.011	0.012	0.013	0.014	0.014	0.014	0.013	0.012	0.010	0.008	0.005	0.003	0.000
DEFLECTION DUE TO WEIGHT OF SLAB *	0.000	0.006	0.012	0.017	0.021	0.024	0.026	0.028	0.028	0.028	0.025	0.023	0.021	0.017	0.013	0.009	0.005	0.003	0.001	0.000	0.000	0.002	0.005	0.011	0.016	0.022	0.029	0.035	0.040	0.045	0.049	0.050	0.051	0.049	0.046	0.041	0.035	0.027	0.020	0.009	0.000
DEFLECTION DUE TO WEIGHT OF RAIL	0.000	0.000	0.001	0.001	0.001	0.002	0.002	0.002	0.002	0.002	0.002	0.002	0.001	0.001	0.001	0.001	0.001	0.000	0.000	0.000	0.000	0.000	0.001	0.001	0.001	0.002	0.002	0.002	0.003	0.003	0.003	0.003	0.003	0.003	0.003	0.003	0.002	0.002	0.001	0.001	0.000
TOTAL DEAD LOAD DEFLECTION	0.000	0.008	0.016	0.023	0.028	0.033	0.036	0.038	0.039	0.038	0.035	0.032	0.028	0.023	0.018	0.013	0.008	0.004	0.001	0.000	0.000	0.003	0.008	0.015	0.022	0.030	0.039	0.047	0.054	0.060	0.065	0.067	0.068	0.066	0.062	0.056	0.047	0.037	0.026	0.013	0.000
REQUIRED CAMBER	0	8	16	23	28	33	36	38	39	38	35	32	28	23	18	13	8	4	1	0	0	3	8	15	22	30	39	47	54	60	65	67	68	66	62	56	47	37	26	13	0

* INCLUDES SLAB, BUILDUPS & STAY-IN-PLACE FORMS.
ALL VALUES ARE SHOWN IN METERS, EXCEPT "REQUIRED CAMBER" WHICH IS SHOWN IN MILLIMETERS.

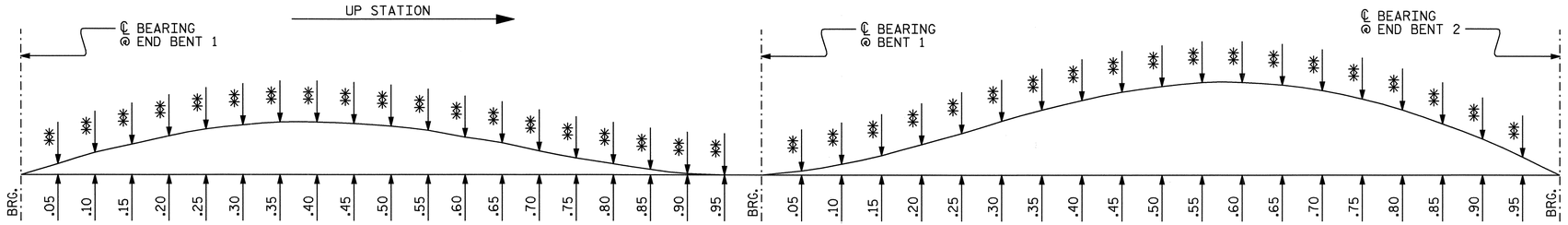

** FOR CAMBER AT TWENTIETH POINTS, SEE TABLES.

SCHEMATIC CAMBER ORDINATES

PROJECT NO. R-0609IA
GUILFORD COUNTY
STATION: 52+13.020 -L-

STATE OF NORTH CAROLINA
DEPARTMENT OF TRANSPORTATION
RALEIGH

SUPERSTRUCTURE
DEAD LOAD DEFLECTIONS
(SOUTHBOUND LANE)

REVISIONS							SHEET NO.
NO.	BY:	DATE:	NO.	BY:	DATE:		S-154
1			3				TOTAL SHEETS
2			4				321

NORTH CAROLINA PROFESSIONAL SEAL 23926 ENGINEER BRIAN C. HANKS
5/22/06

DRAWN BY : D. G. ELY DATE : 2/28/05
CHECKED BY : A. B. NAIK DATE : 4/05

15-MAY-2006 15:36
G:\STRUCT~1\frye\FINAL_~1\Str5\RO6BD5~1.DGN
dely

STR. #5

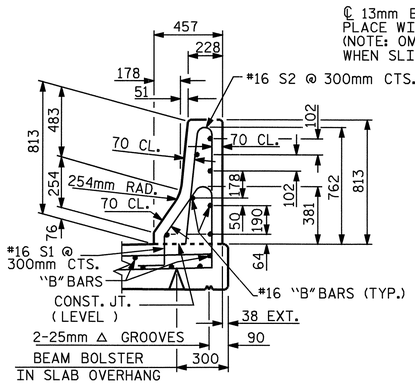

SECTION THRU RAIL

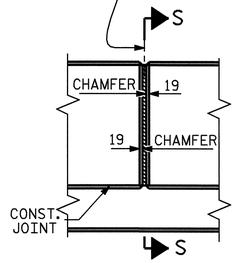

ELEVATION AT EXPANSION JOINTS

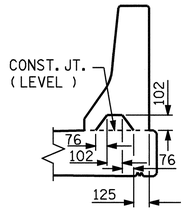

SECTION S-S

AT DAM IN OPEN JOINT (THIS IS TO BE USED ONLY WHEN SLIP FORM IS USED)

NOTES

THE BARRIER RAIL IN A CONTINUOUS UNIT SHALL NOT BE CAST UNTIL ALL SLAB CONCRETE IN THE UNIT HAS BEEN CAST AND HAS REACHED A MINIMUM COMPRESSIVE STRENGTH OF 20.7 MPa.

ALL REINFORCING STEEL IN BARRIER RAILS SHALL BE EPOXY COATED.

VERTICAL GROOVED CONTRACTION JOINTS, 12mm IN DEPTH, SHALL BE TOOLED IN ALL EXPOSED FACES OF THE BARRIER RAIL AND IN ACCORDANCE WITH ARTICLE 825-10(B) OF THE STANDARD SPECIFICATIONS. THE CONTRACTION JOINT SHALL BE LOCATED AT EACH THIRD POINT BETWEEN BARRIER RAIL EXPANSION JOINTS. ONLY ONE CONTRACTION JOINT IS REQUIRED AT MIDPOINT OF BARRIER RAIL SEGMENTS LESS THAN 6.1m IN LENGTH AND NO CONTRACTION JOINTS ARE REQUIRED FOR THOSE SEGMENTS LESS THAN 3.5m IN LENGTH.

THE #16 S1 & #16 S2 BARS MAY BE SHIFTED SLIGHTLY AS NECESSARY IN ORDER TO MAINTAIN 50mm CLEARANCE FROM THE 13mm EXPANSION JOINT MATERIAL IN THE BARRIER RAIL.

BAR TYPES

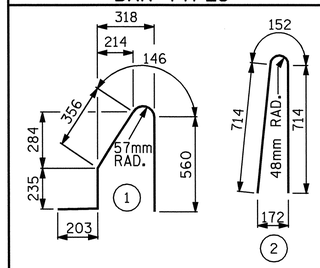

ALL BAR DIMENSIONS ARE OUT TO OUT

BILL OF MATERIAL

BAR	NO.	SIZE	TYPE	LENGTH	WEIGHT
✳B1	14	#16	STR	3840	83
✳B2	112	#16	STR	8900	1547
✳B3	14	#16	STR	7040	153
✳S1	554	#16	1	1500	1290
✳S2	554	#16	2	1580	1358
✳EPOXY COATED REINFORCING STEEL					4,431 kg
CLASS AA CONCRETE					41.7 CU. METER
CONCRETE BARRIER RAIL					166.180m

BARRIER RAIL DETAILS

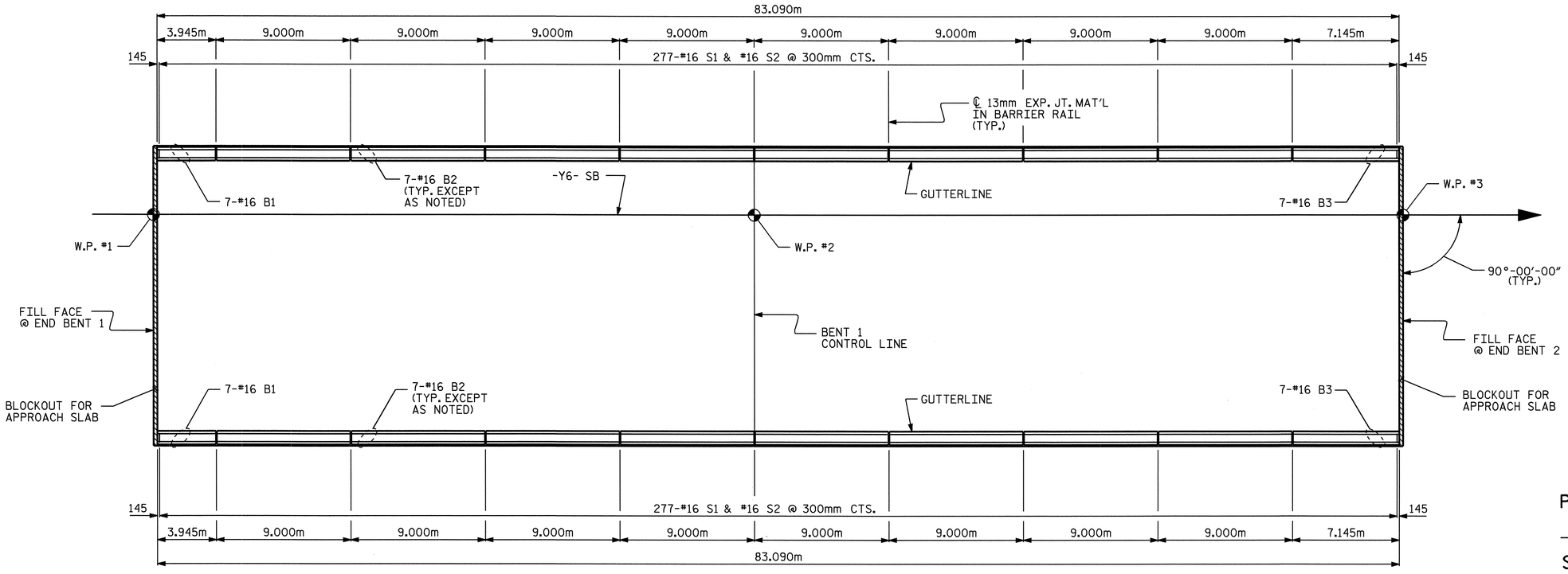

PLAN OF BARRIER RAIL

PROJECT NO. R-0609IA

GUILFORD COUNTY

STATION: 52+13.020 -L-

STATE OF NORTH CAROLINA
DEPARTMENT OF TRANSPORTATION
RALEIGH

SUPERSTRUCTURE

CONCRETE BARRIER RAIL

(SOUTHBOUND LANE)

NORTH CAROLINA PROFESSIONAL SEAL 23926 ENGINEER BRIAN C. HANKS
5/22/06

REVISIONS						SHEET NO.
NO.	BY:	DATE:	NO.	BY:	DATE:	S-155
1			3			TOTAL SHEETS
2			4			321

STD. No. CBR1SM

STR. #5

ASSEMBLED BY : D. G. ELY	DATE : 2/25/05	
CHECKED BY : A. B. NAIK	DATE : 4/05	
DRAWN BY : ARB 5/87	REV. 8/16/99	RWW/LES
CHECKED BY : SJD 9/87	REV. 10/17/00	RWW/LES
	REV. 5/7/03R	RWW/JTE

15-MAY-2006 15:36
G:\STRUCT~1\frye\FINAL_~1\Str5\R06E53~1.DGN
dely

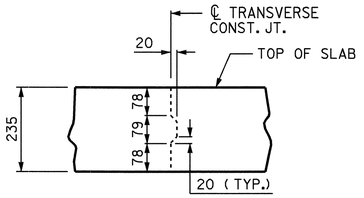

TRANSVERSE CONST. JT. DETAIL

NOTE: REINFORCING STEEL IN SLAB NOT SHOWN. LONGITUDINAL REINFORCING STEEL SHALL BE CONTINUOUS THRU JOINT.

SUPERSTRUCTURE REINFORCING STEEL LENGTHS ARE BASED ON THE FOLLOWING MINIMUM SPLICE LENGTHS					
BAR SIZE	SUPERSTRUCTURE EXCEPT APPROACH SLABS, PARAPET, AND BARRIER RAIL		APPROACH SLABS		PARAPET AND BARRIER RAIL
	EPOXY COATED	UNCOATED	EPOXY COATED	UNCOATED	
#13	610	540	610	540	840
#16	770	660	770	660	1050
#19	920	790	1190	790	1330
#22	1580	1060			
#25	2080	1390			

GROOVING BRIDGE FLOORS	
APPROACH SLABS	260.3m²
BRIDGE DECK	1,419.2m²
TOTAL	1,679.5m²

BILL OF MATERIAL

BAR	NO.	SIZE	TYPE	LENGTH	WEIGHT
* A1	1108	16	STR	9840	16921
A2	1108	16	STR	9780	16818
* B1	123	13	STR	8920	1091
* B2	243	22	STR	11060	8176
* B3	164	13	STR	7640	1245
* B4	20	13	STR	8860	176
B5	390	16	STR	17140	10374
* D1	162	22	STR	10000	4928
H1	28	22	4	3660	312
H2	14	22	4	2960	126
H3	14	22	4	4260	181
K1	48	16	STR	10780	803
K2	8	16	STR	900	11
* S1	116	13	1	3520	406
* S2	116	13	2	2500	288
U1	112	16	3	4500	782
V1	48	16	STR	2140	159
V2	48	16	STR	2160	161

REINFORCING STEEL 29.727 kg

* EPOXY COATED REINFORCING STEEL 33,231 kg

BAR TYPES

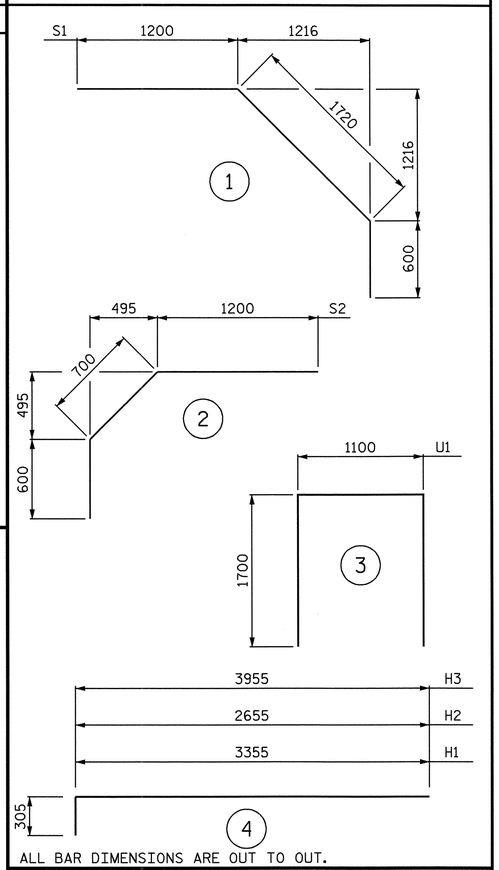

ALL BAR DIMENSIONS ARE OUT TO OUT.

SUPERSTRUCTURE BILL OF MATERIAL

SOUTHBOUND LANE	CLASS AA CONCRETE	REINFORCING STEEL	EPOXY COATED REINFORCING STEEL
	(m3)	(kg)	(kg)
SPANS "A" & "B"		29,727	33,231
POUR #1	120.9		
POUR #2	115.2		
POUR #3	176.4		
POUR #4	110.4		
TOTALS	522.9	29,727	33,231

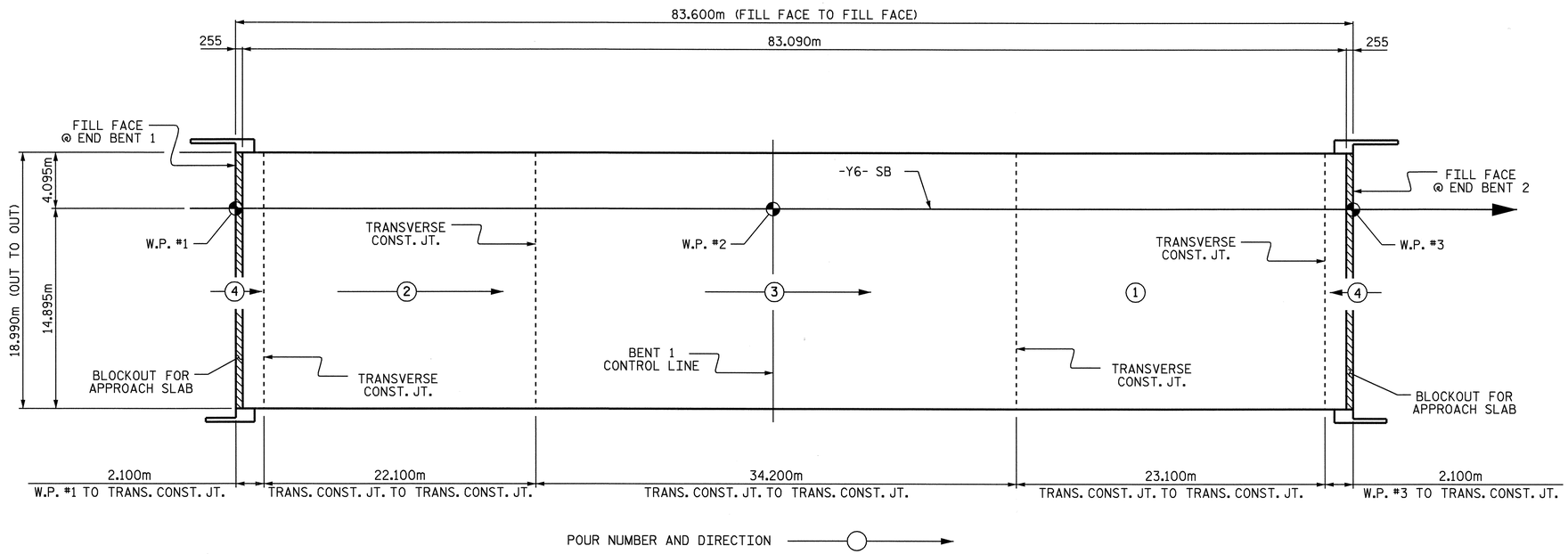

POUR SEQUENCE AND LAYOUT FOR COMPUTING AREA OF REINFORCED CONCRETE DECK SLAB (SQ. METER = 1,587.6)

PROJECT NO. R-0609IA

GUILFORD COUNTY

STATION: 52+13.020 -L-

STATE OF NORTH CAROLINA
DEPARTMENT OF TRANSPORTATION
RALEIGH

SUPERSTRUCTURE

BILL OF MATERIAL

(SOUTHBOUND LANE)

REVISIONS						SHEET NO.
NO.	BY:	DATE:	NO.	BY:	DATE:	S-156
1			3			TOTAL SHEETS
2			4			321

STR. #5

NORTH CAROLINA PROFESSIONAL SEAL 23926 ENGINEER BRIAN C. HANKS
11/9/06

DRAWN BY : D. G. ELY DATE : 2/28/05
CHECKED BY : A. B. NAIK DATE : 4/05

09-NOV-2006 14:10
R:\Structures\frye\FINAL_PLANS\Str5\R0609IA_sd_BM_STR.5.dgn
bhanks

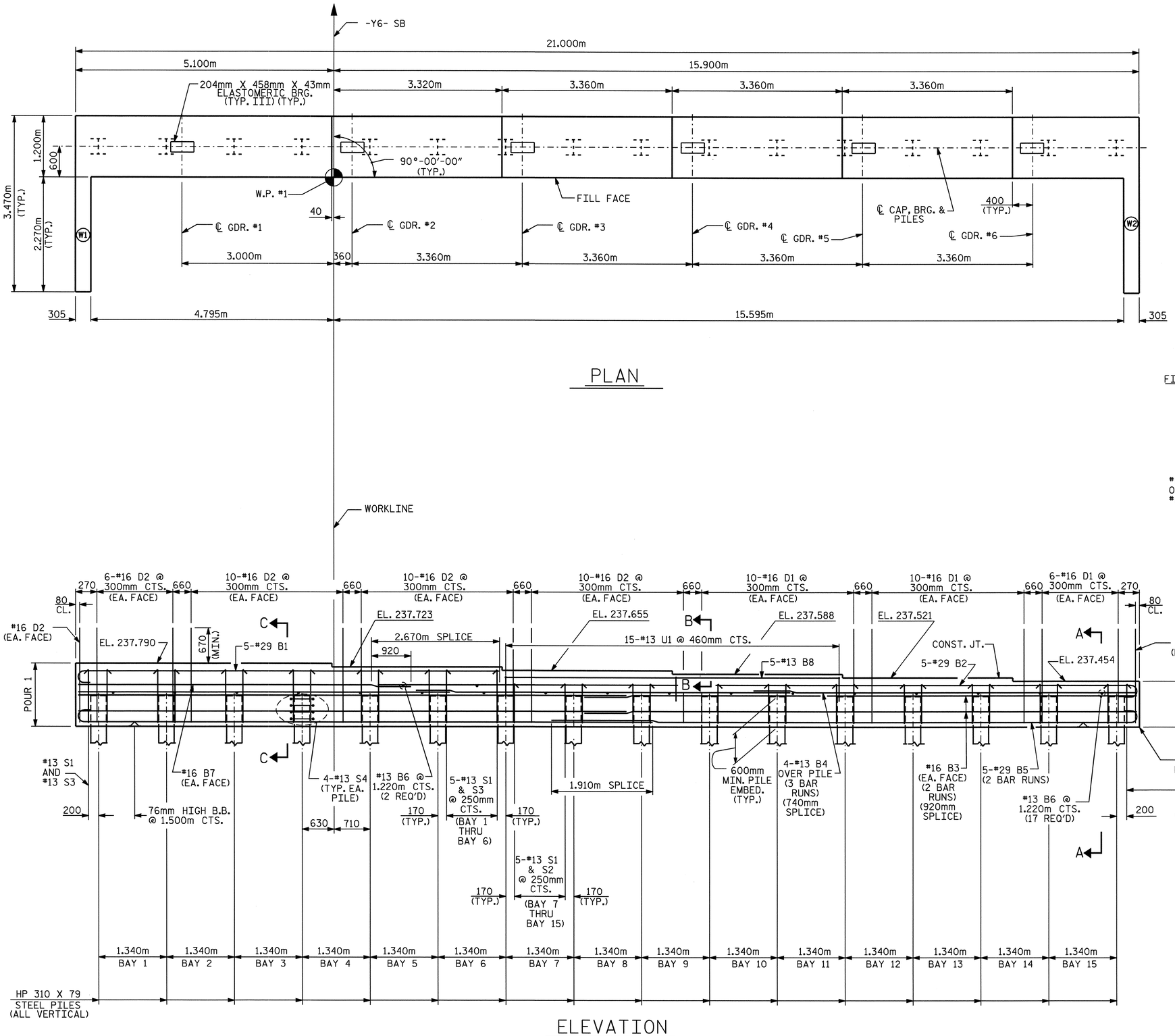

PLAN

ELEVATION

(WINGS NOT SHOWN FOR CLARITY)
(FOR WING REINFORCING STEEL AND DETAILS, SEE SHEET 2 OF 2)

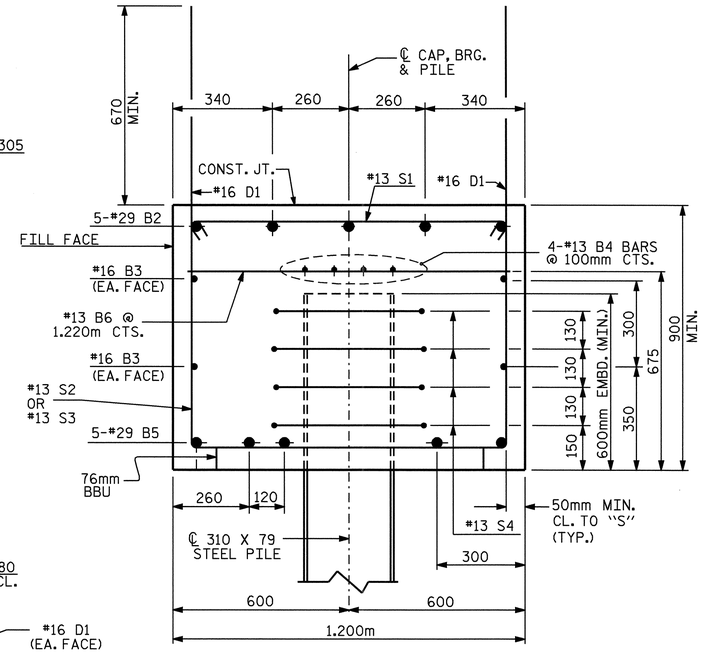

SECTION A-A

NOTES:

FOR PILE SPLICE DETAILS, SEE SHEET 2 OF 2.

FOR TEMPORARY DRAINAGE DETAILS, SEE SHEET 2 OF 2.

THE CONTRACTOR SHALL PROVIDE FOR INSTALLATION OF THE 102mm DIAMETER DRAIN PIPE THROUGH THE WING WALL AS REQUIRED FOR REINFORCED BRIDGE APPROACH FILLS, SEE THE ROADWAY PLANS. REINFORCING STEEL IN THE WING WALL MAY BE SHIFTED AS NECESSARY TO CLEAR THE DRAIN PIPE.

THE TOP SURFACE OF THE END BENT CAP AND WINGS, EXCLUDING THE OUTSIDE 4" AND THE BEARING AREA, SHALL BE RAKED TO A DEPTH OF 1/4".

PROJECT NO. R-0609IA

GUILFORD COUNTY

STATION: 52+13.020 -L-

SHEET 1 OF 2

STATE OF NORTH CAROLINA
DEPARTMENT OF TRANSPORTATION
RALEIGH

SUBSTRUCTURE

END BENT 1

REVISIONS						SHEET NO.
NO.	BY:	DATE:	NO.	BY:	DATE:	S-157
1			3			TOTAL SHEETS
2			4			321

STR. #5

NORTH CAROLINA PROFESSIONAL SEAL 23926 ENGINEER BRIAN C. HANKS
3/22/06

DRAWN BY : QT NGUYEN DATE : 2-05
CHECKED BY : RW WRIGHT DATE : 3-05

16-MAY-2006 08:48
G:\STRUCT~1\frye\FINAL_~1\Str5\ROBC20~1.DGN
dely

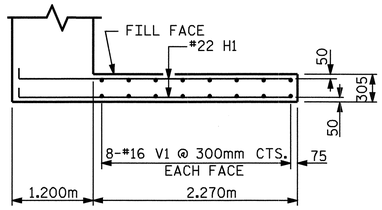

PLAN OF WING W1

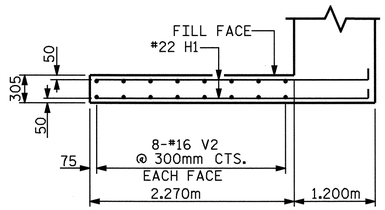

PLAN OF WING W2

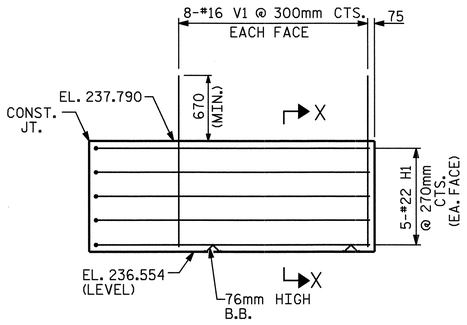

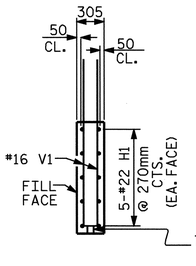

SECTION X-X

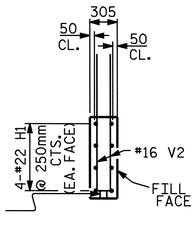

SECTION Y-Y

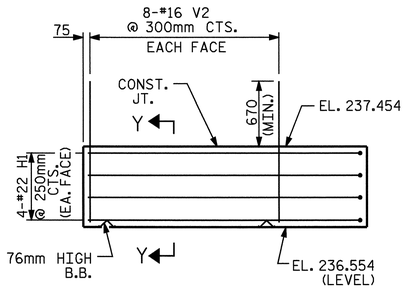

ELEVATION OF WING W1

ELEVATION OF WING W2

BAR TYPES

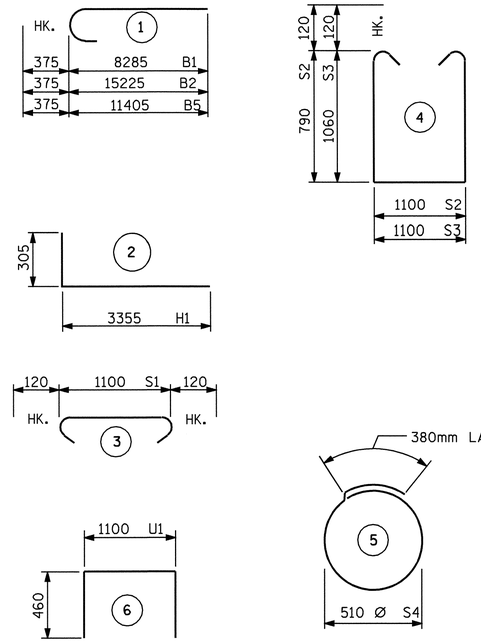

ALL BAR DIMENSIONS ARE OUT TO OUT.

BILL OF MATERIAL

END BENT 1

BAR	NO.	SIZE	TYPE	LENGTH	WEIGHT
B1	5	#29	1	8660	219
B2	5	#29	1	15600	395
B3	8	#16	STR	10900	135
B4	12	#13	STR	7460	89
B5	10	#29	1	11780	596
B6	19	#13	STR	1100	21
B7	2	#16	STR	6540	20
B8	5	#13	STR	6720	33
D1	54	#16	STR	1640	137
D2	74	#16	STR	1840	211
H1	18	#22	2	3660	200
S1	77	#13	3	1340	103
S2	46	#13	4	2920	134
S3	31	#13	4	3460	107
S4	64	#13	5	1980	126
U1	15	#13	6	2020	30
V1	16	#16	STR	1840	46
V2	16	#16	STR	1500	37

REINFORCING STEEL = 2639 KG

CLASS A CONCRETE BREAKDOWN
POUR #1: CAP & LOWER WINGS 28.9 M3

TOTAL CONCRETE 28.9 M3

PILE EXCAVATION IN SOIL 7.0 METERS

PILE EXCAVATION NOT IN SOIL 66.1 METERS

HP 310 X 79 STEEL PILES
NO. 16 73.1 METERS

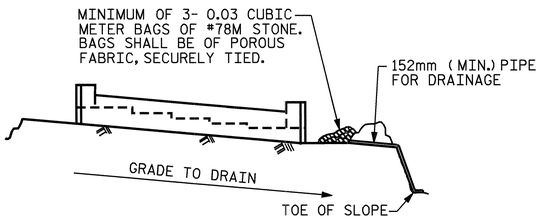

BAGGED STONE AND PIPE SHALL BE PLACED IMMEDIATELY AFTER COMPLETION OF END BENT EXCAVATION. PIPE MAY BE EITHER CONCRETE, CORRUGATED STEEL, CORRUGATED ALUMINUM ALLOY, OR CORRUGATED PLASTIC. PERFORATED PIPE WILL NOT BE ALLOWED.

BAGGED STONE SHALL REMAIN IN PLACE UNTIL THE ENGINEER DIRECTS THAT IT BE REMOVED. THE CONTRACTOR SHALL REMOVE AND DISPOSE OF SILT ACCUMULATIONS AT BAGGED STONE WHEN SO DIRECTED BY THE ENGINEER. BAGS SHALL BE REMOVED AND REPLACED WHENEVER THE ENGINEER DETERMINES THAT THEY HAVE DETERIORATED AND LOST THEIR EFFECTIVENESS.

NO SEPARATE PAYMENT WILL BE MADE FOR THIS WORK AND THE ENTIRE COST OF THIS WORK SHALL BE INCLUDED IN THE UNIT CONTRACT PRICE BID FOR THE SEVERAL PAY ITEMS.

TEMPORARY DRAINAGE AT END BENT

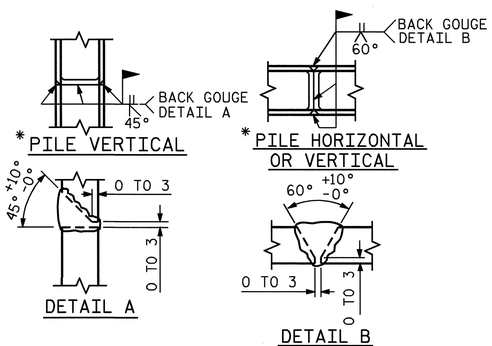

* POSITION OF PILE DURING WELDING.

PILE SPLICE DETAILS

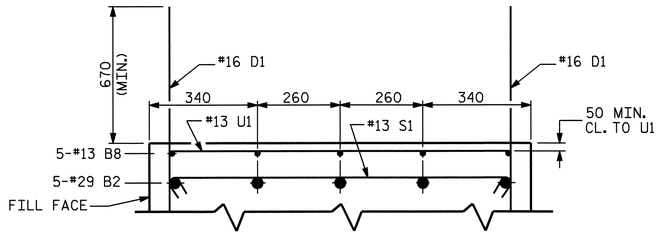

PARTIAL SECTION B-B

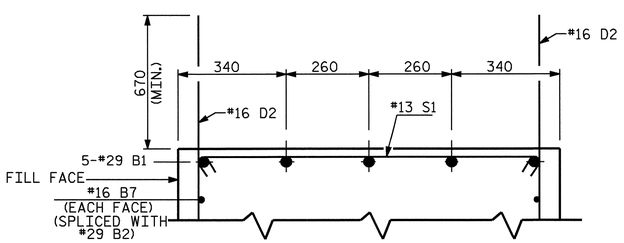

PARTIAL SECTION C-C

NORTH CAROLINA PROFESSIONAL SEAL 23926 ENGINEER BRIAN C. HANKS
5/22/06

PROJECT NO. R-0609IA
GUILFORD COUNTY
STATION: 52+13.020 -L-

SHEET 2 OF 2

STATE OF NORTH CAROLINA
DEPARTMENT OF TRANSPORTATION
RALEIGH

SUBSTRUCTURE
END BENT 1

REVISIONS						SHEET NO.
NO.	BY:	DATE:	NO.	BY:	DATE:	S-158
1			3			TOTAL SHEETS
2			4			321

DRAWN BY : QT NGUYEN DATE : 02-05
CHECKED BY : RW WRIGHT DATE : 03-05

15-MAY-2006 15:34
G:\STRUCT~1\frye\FINAL_~1\Str5\ROBC20~1.DGN
dely

STR. #5

NOTES

STIRRUPS IN CAP MAY BE SHIFTED AS NECESSARY TO CLEAR ANCHOR BOLTS.

HOOKS ON "V" BARS MAY BE TURNED AS NECESSARY FOR PLACING REINFORCING STEEL.

THE CONTRACTOR'S ATTENTION IS CALLED TO THE FACT THAT THE "M1" IS DETAILED WITH ONE METER OF EXTRA LENGTH.

THE CONTRACTOR'S ATTENTION IS CALLED TO THE FACT THAT THE CENTERLINE OF CAP, COLUMN & FOOTINGS IS OFFSET FROM THE CONTROL LINE OF BENT.

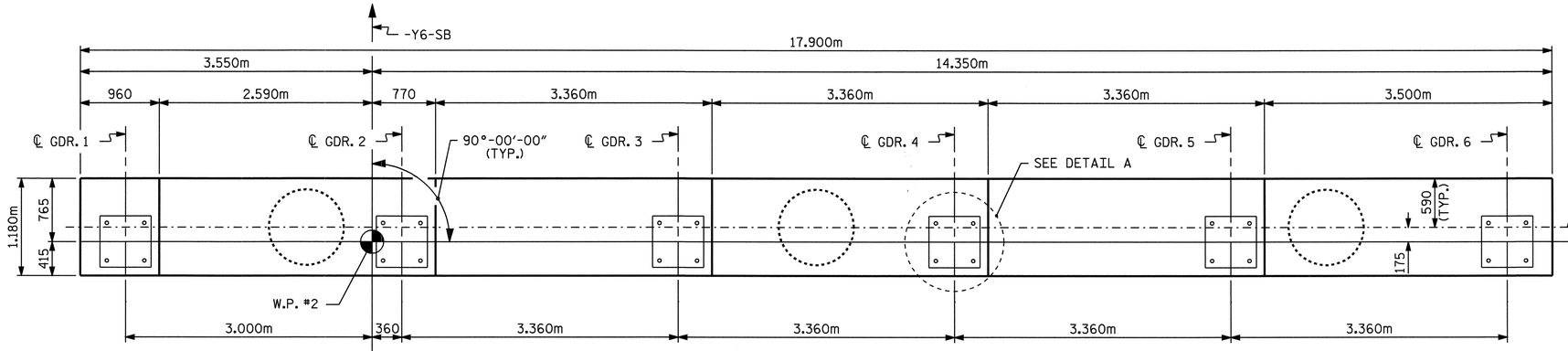

PLAN

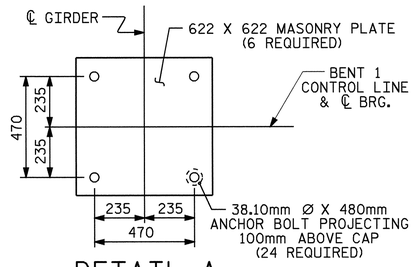

DETAIL A

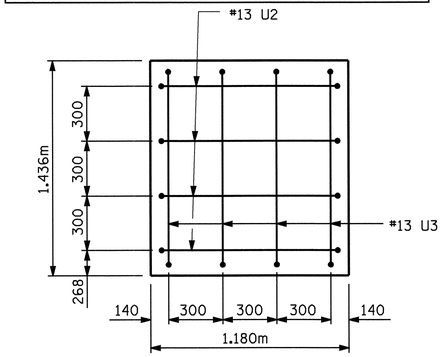

VIEW X-X

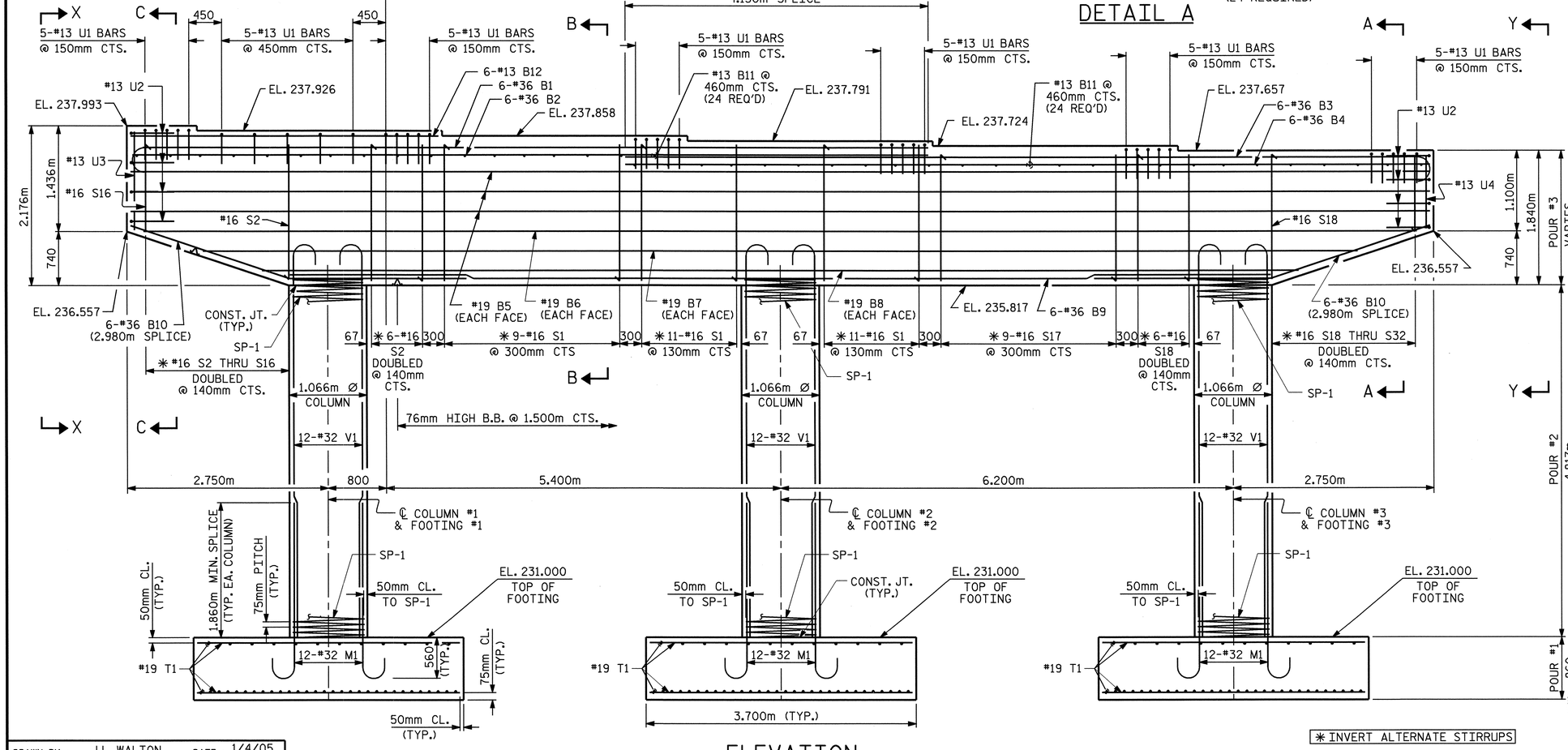

✱ INVERT ALTERNATE STIRRUPS

ELEVATION

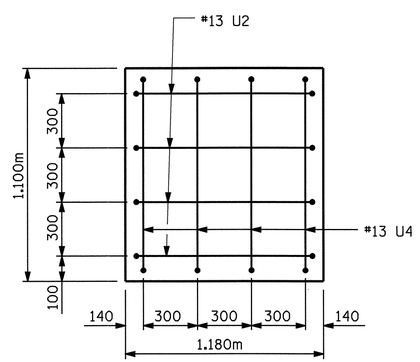

VIEW Y-Y

PROJECT NO. R-0609IA

GUILFORD COUNTY

STATION: 52+13.020 -L-

SHEET 1 OF 2

STATE OF NORTH CAROLINA
DEPARTMENT OF TRANSPORTATION
RALEIGH

SUBSTRUCTURE
BENT 1

REVISIONS						SHEET NO.
NO.	BY:	DATE:	NO.	BY:	DATE:	S-159
1			3			TOTAL SHEETS
2			4			321

NORTH CAROLINA PROFESSIONAL SEAL 23926 ENGINEER BRIAN C. HANKS
5/12/06

DRAWN BY : J.L. WALTON DATE : 1/4/05
CHECKED BY : R. W. WRIGHT DATE : 3/05

15-MAY-2006 15:33
G:\STRUCT~1\frye\FINAL_~1\Str5\R0609I~3.DGN
dely

STR #5

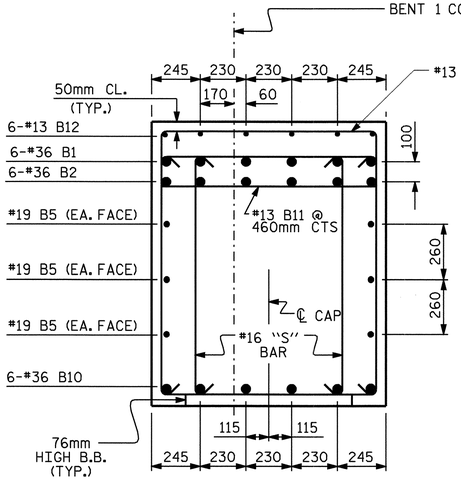

SECTION C-C

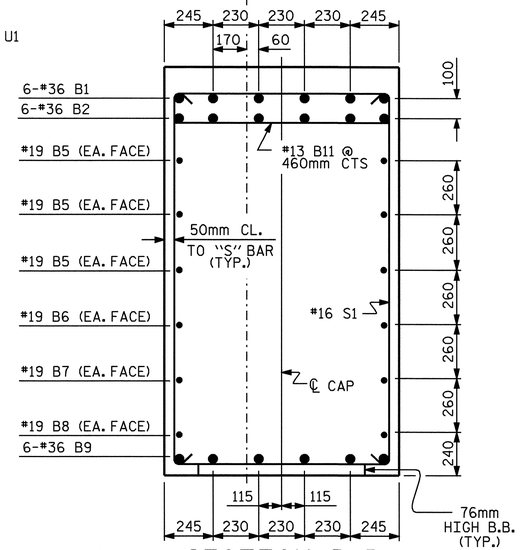

SECTION B-B

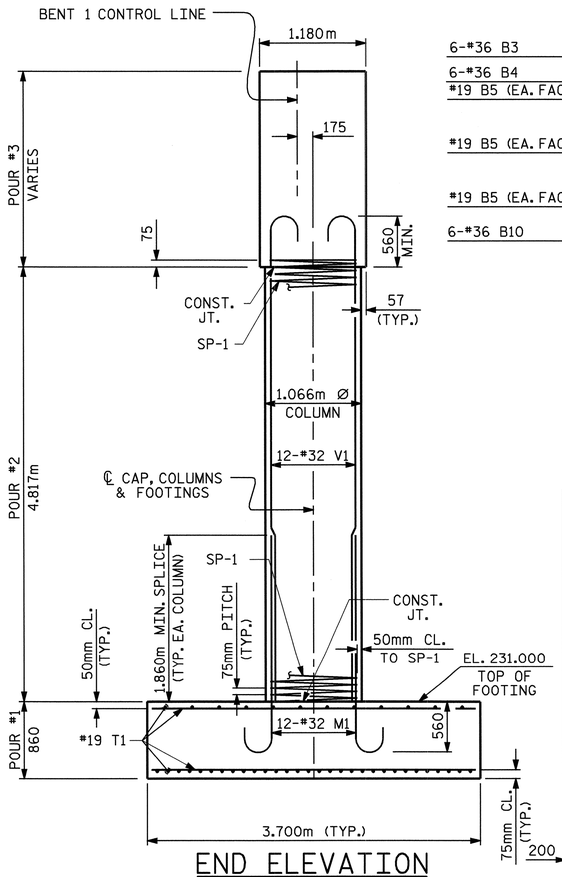

END ELEVATION

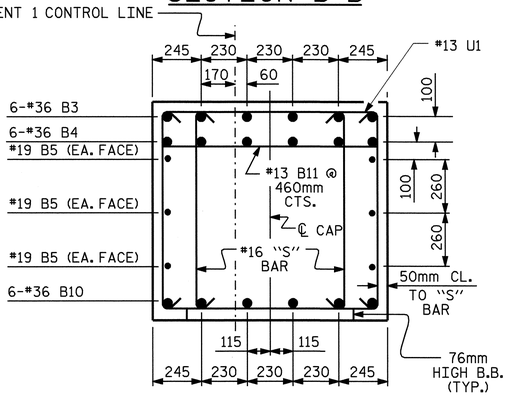

SECTION A-A

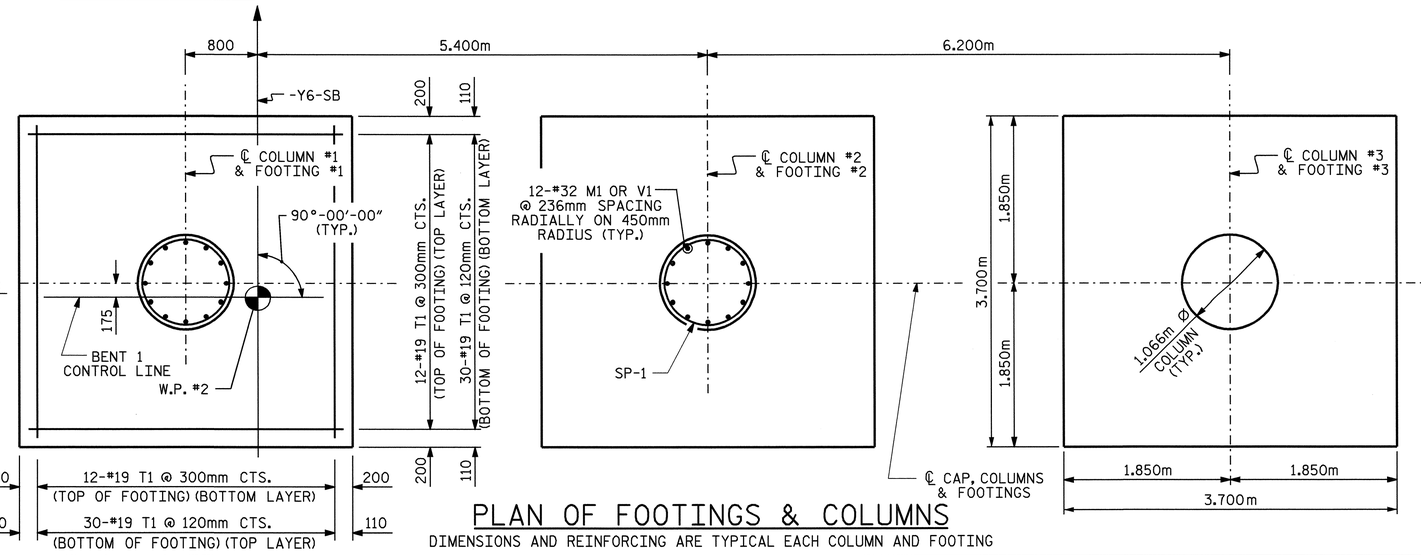

PLAN OF FOOTINGS & COLUMNS

DIMENSIONS AND REINFORCING ARE TYPICAL EACH COLUMN AND FOOTING

BAR TYPES

ALL BAR DIMENSIONS ARE OUT TO OUT.

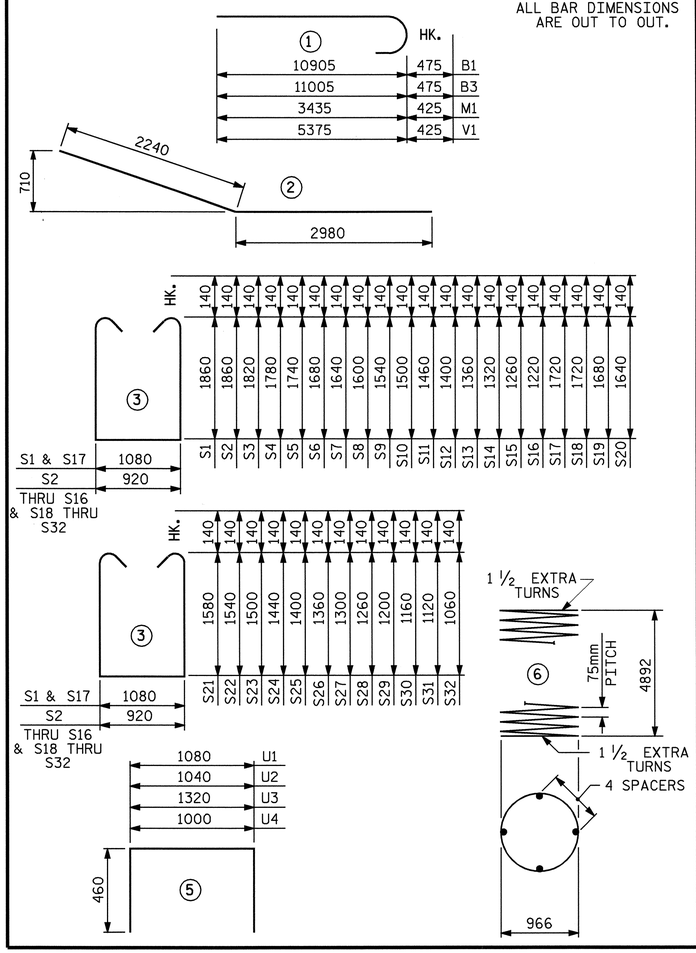

BILL OF MATERIAL BENT 1

BAR	NO.	SIZE	TYPE	LENGTH	WEIGHT
B1	6	*36	1	11380	540
B2	6	*36	STR	10900	517
B3	6	*36	1	11480	545
B4	6	*36	STR	11000	522
B5	6	*19	STR	17800	239
B6	2	*19	STR	17600	79
B7	2	*19	STR	16040	72
B8	2	*19	STR	14480	65
B9	6	*36	STR	13460	639
B10	12	*36	2	5220	495
B11	48	*13	STR	1080	52
B12	6	*13	STR	4220	25
M1	36	*32	1	3860	890
S1	31	*16	3	5080	244
S2	14	*16	3	4920	107
S3	2	*16	3	4840	15
S4	2	*16	3	4760	15
S5	2	*16	3	4680	15
S6	2	*16	3	4560	14
S7	2	*16	3	4480	14
S8	2	*16	3	4400	14
S9	2	*16	3	4280	13
S10	2	*16	3	4200	13
S11	2	*16	3	4120	13
S12	2	*16	3	4000	12
S13	2	*16	3	3920	12
S14	2	*16	3	3840	12
S15	2	*16	3	3720	12
S16	2	*16	3	3640	11
S17	9	*16	3	4800	67
S18	14	*16	3	4640	101
S19	2	*16	3	4560	14
S20	2	*16	3	4480	14
S21	2	*16	3	4360	14
S22	2	*16	3	4280	13
S23	2	*16	3	4200	13
S24	2	*16	3	4080	13
S25	2	*16	3	4000	12
S26	2	*16	3	3920	12
S27	2	*16	3	3800	12
S28	2	*16	3	3720	12
S29	2	*16	3	3600	11
S30	2	*16	3	3520	11

BAR	NO.	SIZE	TYPE	LENGTH	WEIGHT
S31	2	*16	3	3440	11
S32	2	*16	3	3320	10
V1	36	*32	1	5800	1338
U1	35	*13	5	2000	70
U2	8	*13	5	1960	16
U3	4	*13	5	2240	9
U4	4	*13	5	1920	8
T1	252	*19	STR	3600	2028
REINFORCING STEEL				KG.	9025
SP-1	3	**	6	203720	608
SPIRAL COLUMN REINFORCING STEEL KG. 608					

CLASS "A" CONCRETE		
POUR #1 (FOOTINGS)	M³	35.3
POUR #2 (COLUMNS)	M³	12.9
POUR #3 (CAP)	M³	40.0
TOTAL CONCRETE	M³	88.2

FOUNDATION EXCAVATION — LUMP SUM

** THE SP-1 SPIRAL REINFORCING STEEL SHALL BE W-20 OR D-20 COLD DRAWN WIRE OR #13 PLAIN OR DEFORMED BAR.

NORTH CAROLINA PROFESSIONAL SEAL 23926 ENGINEER BRIAN C. HANKS
5/22/06

PROJECT NO. R-0609IA

GUILFORD COUNTY

STATION: 52+13.020 -L-

SHEET 2 OF 2

STATE OF NORTH CAROLINA
DEPARTMENT OF TRANSPORTATION
RALEIGH

SUBSTRUCTURE
BENT 1

REVISIONS						SHEET NO.
NO.	BY:	DATE:	NO.	BY:	DATE:	S-160
1			3			TOTAL SHEETS
2			4			321

DRAWN BY : J.L. WALTON DATE : 1/4/05
CHECKED BY : R. W. WRIGHT DATE : 3/05

15-MAY-2006 15:32
G:\STRUCT~1\frye\FINAL_~1\Str5\R0609I~3.DGN
dely

STR #5

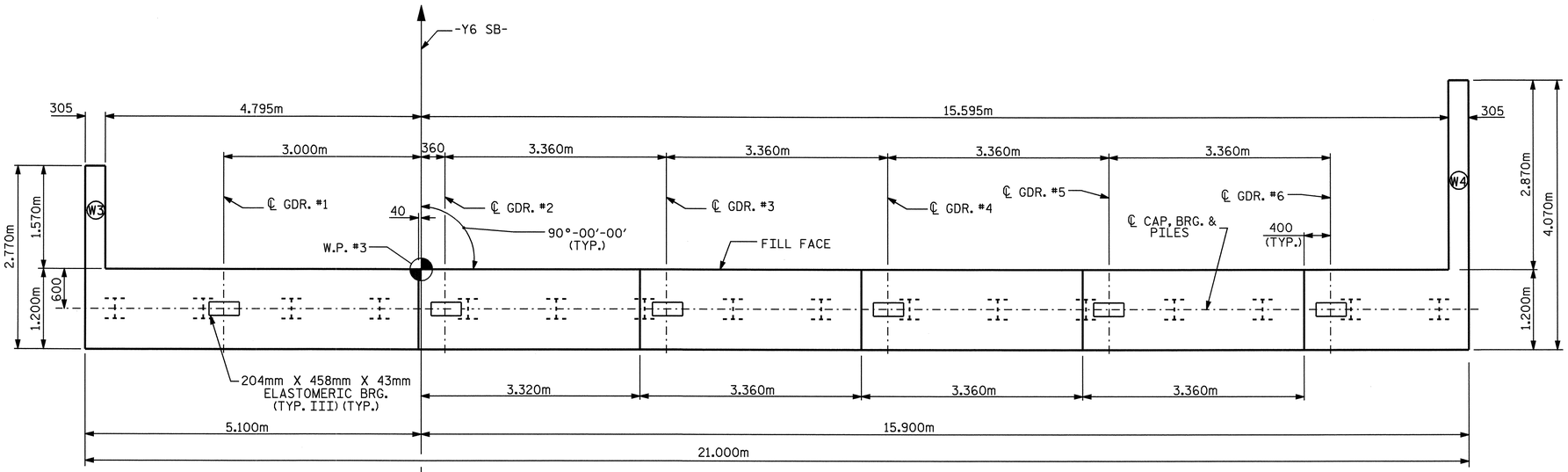

PLAN

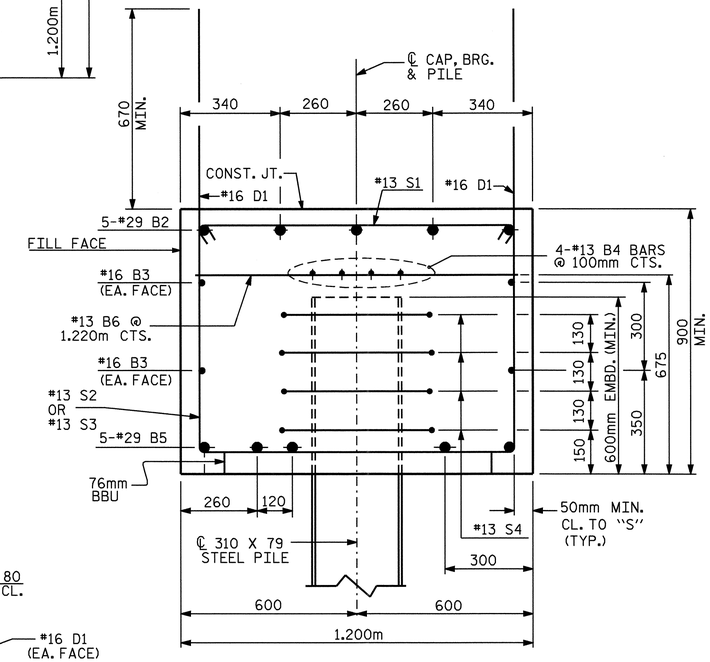

SECTION A-A

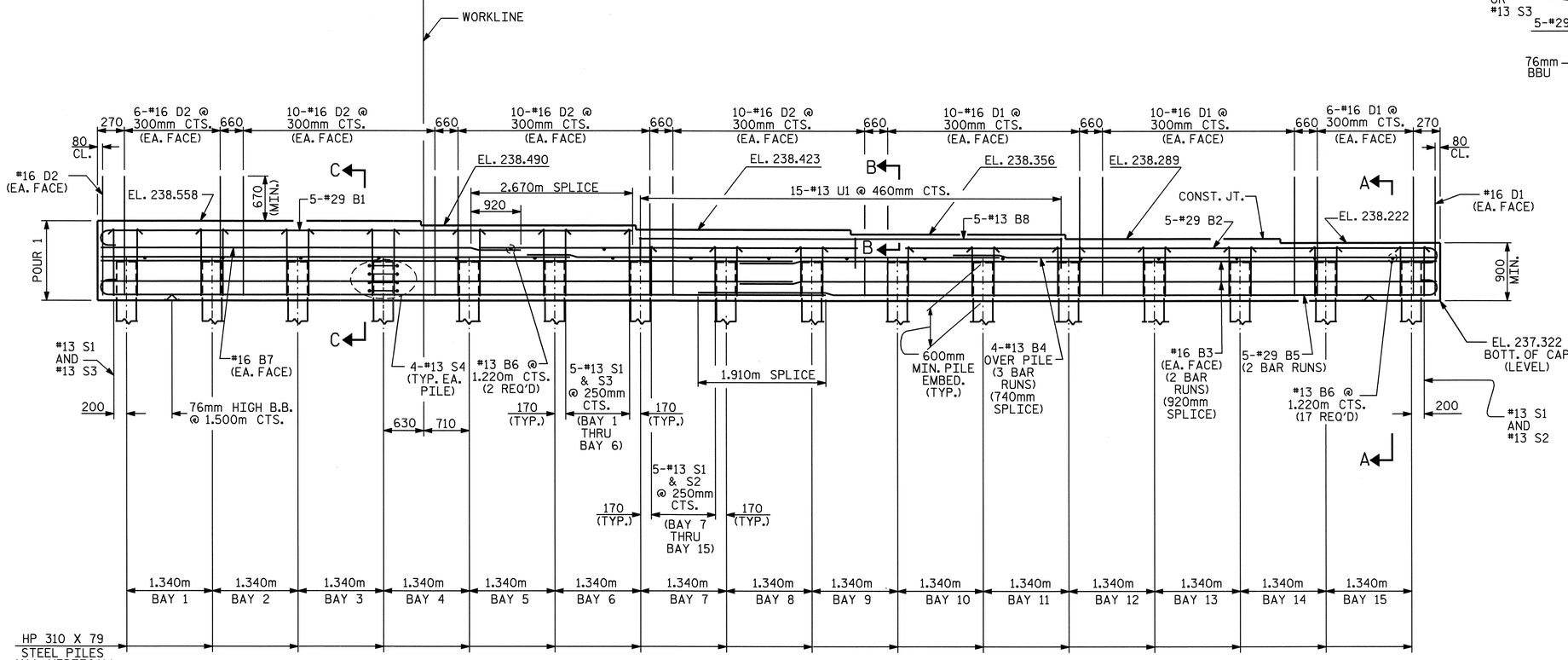

ELEVATION

(WINGS NOT SHOWN FOR CLARITY)

(FOR WING REINFORCING STEEL AND DETAILS, SEE SHEET 2 OF 2)

NOTES:

FOR PILE SPLICE DETAILS, SEE SHEET 2 OF 2.

FOR TEMPORARY DRAINAGE DETAILS, SEE SHEET 2 OF 2.

THE CONTRACTOR SHALL PROVIDE FOR INSTALLATION OF THE 102mm DIAMETER DRAIN PIPE THROUGH THE WING WALL AS REQUIRED FOR REINFORCED BRIDGE APPROACH FILLS, SEE THE ROADWAY PLANS. REINFORCING STEEL IN THE WING WALL MAY BE SHIFTED AS NECESSARY TO CLEAR THE DRAIN PIPE.

THE TOP SURFACE OF THE END BENT CAP AND WINGS, EXCLUDING THE OUTSIDE 4" AND THE BEARING AREA, SHALL BE RAKED TO A DEPTH OF 1/4".

PROJECT NO. R-0609IA

GUILFORD COUNTY

STATION: 52+13.020 -L-

SHEET 1 OF 2

STATE OF NORTH CAROLINA
DEPARTMENT OF TRANSPORTATION
RALEIGH

SUBSTRUCTURE

END BENT 2

REVISIONS						SHEET NO.
NO.	BY:	DATE:	NO.	BY:	DATE:	S-161
1			3			TOTAL SHEETS
2			4			321

STR. #5

NORTH CAROLINA PROFESSIONAL SEAL 23926 ENGINEER BRIAN C. HANKS

5/22/06

DRAWN BY : QT NGUYEN DATE : 2-05
CHECKED BY : RW WRIGHT DATE : 3-05

16-MAY-2006 08:48
G:\STRUCT~1\frye\FINAL_~1\Str5\ROBC20~1.DGN
dely

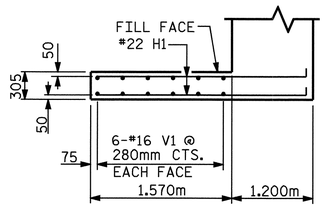

PLAN OF WING W3

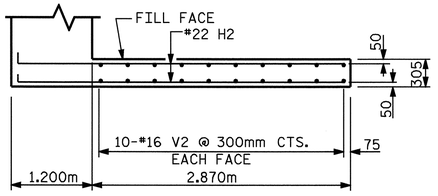

PLAN OF WING W4

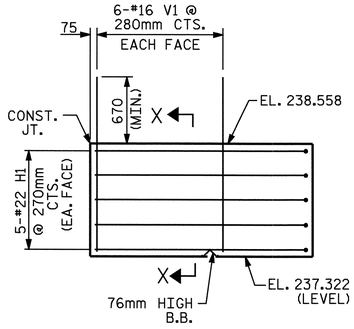

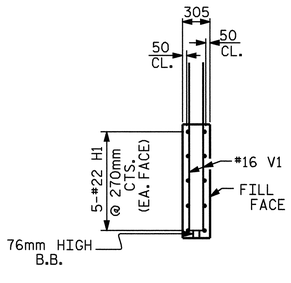

SECTION X-X

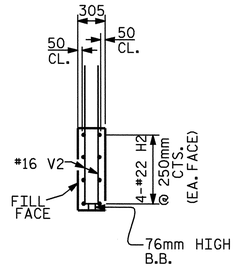

SECTION Y-Y

ELEVATION OF WING W3

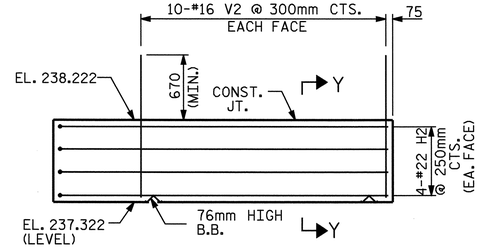

ELEVATION OF WING W4

BAR TYPES

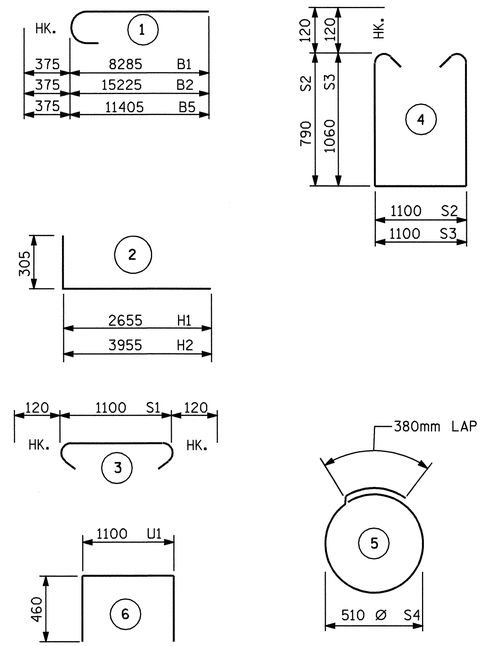

ALL BAR DIMENSIONS ARE OUT TO OUT.

BILL OF MATERIAL
END BENT 2

BAR	NO.	SIZE	TYPE	LENGTH	WEIGHT
B1	5	#29	1	8660	219
B2	5	#29	1	15600	395
B3	8	#16	STR	10900	135
B4	12	#13	STR	7460	89
B5	10	#29	1	11780	596
B6	19	#13	STR	1100	21
B7	2	#16	STR	6540	20
B8	5	#13	STR	6720	33
D1	54	#16	STR	1640	137
D2	74	#16	STR	1840	211
H1	10	#22	2	2960	90
H2	8	#22	2	4260	104
S1	77	#13	3	1340	103
S2	46	#13	4	2920	134
S3	31	#13	4	3460	107
S4	64	#13	5	1980	126
U1	15	#13	6	2020	30
V1	12	#16	STR	1840	34
V2	20	#16	STR	1500	47

REINFORCING STEEL = 2631 KG

CLASS A CONCRETE BREAKDOWN
POUR #1: CAP & LOWER WINGS 28.8 M3

TOTAL CONCRETE 28.8 M3

PILE EXCAVATION IN SOIL 14.4 METERS

PILE EXCAVATION NOT IN SOIL 58.7 METERS

HP 310 X 79 STEEL PILES
NO. 16 73.1 METERS

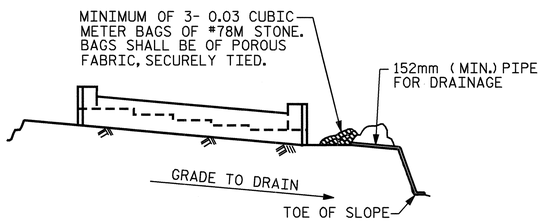

BAGGED STONE AND PIPE SHALL BE PLACED IMMEDIATELY AFTER COMPLETION OF END BENT EXCAVATION. PIPE MAY BE EITHER CONCRETE, CORRUGATED STEEL, CORRUGATED ALUMINUM ALLOY, OR CORRUGATED PLASTIC. PERFORATED PIPE WILL NOT BE ALLOWED.

BAGGED STONE SHALL REMAIN IN PLACE UNTIL THE ENGINEER DIRECTS THAT IT BE REMOVED. THE CONTRACTOR SHALL REMOVE AND DISPOSE OF SILT ACCUMULATIONS AT BAGGED STONE WHEN SO DIRECTED BY THE ENGINEER. BAGS SHALL BE REMOVED AND REPLACED WHENEVER THE ENGINEER DETERMINES THAT THEY HAVE DETERIORATED AND LOST THEIR EFFECTIVENESS.

NO SEPARATE PAYMENT WILL BE MADE FOR THIS WORK AND THE ENTIRE COST OF THIS WORK SHALL BE INCLUDED IN THE UNIT CONTRACT PRICE BID FOR THE SEVERAL PAY ITEMS.

TEMPORARY DRAINAGE AT END BENT

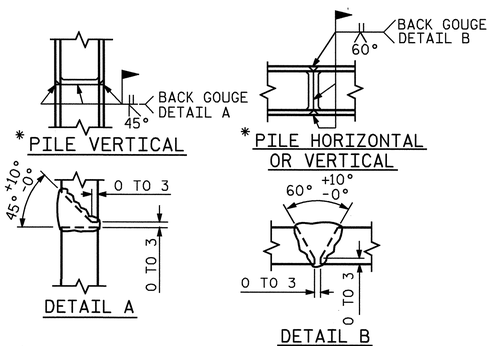

* POSITION OF PILE DURING WELDING.

PILE SPLICE DETAILS

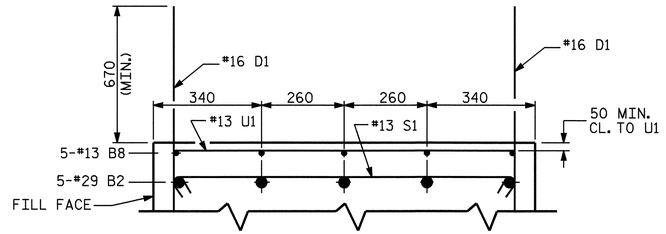

PARTIAL SECTION B-B

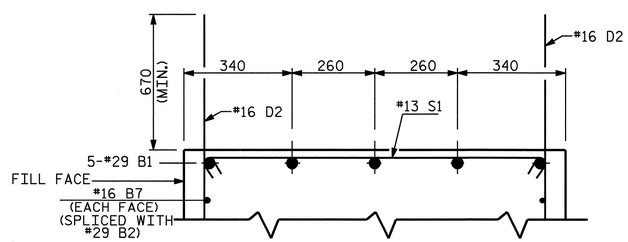

PARTIAL SECTION C-C

PROJECT NO. R-0609IA
GUILFORD COUNTY
STATION: 52+13.020 -L-

SHEET 2 OF 2

STATE OF NORTH CAROLINA
DEPARTMENT OF TRANSPORTATION
RALEIGH

SUBSTRUCTURE
END BENT 2

REVISIONS						SHEET NO.
NO.	BY:	DATE:	NO.	BY:	DATE:	S-162
1			3			TOTAL SHEETS
2			4			321

NORTH CAROLINA PROFESSIONAL SEAL 23926 ENGINEER BRIAN C. HANKS
5/22/06

DRAWN BY : QT NGUYEN DATE : 02-05
CHECKED BY : RW WRIGHT DATE : 03-05

15-MAY-2006 15:32
G:\STRUCT~1\frye\FINAL_~1\Str5\ROBC20~1.DGN
dely

STR. #5

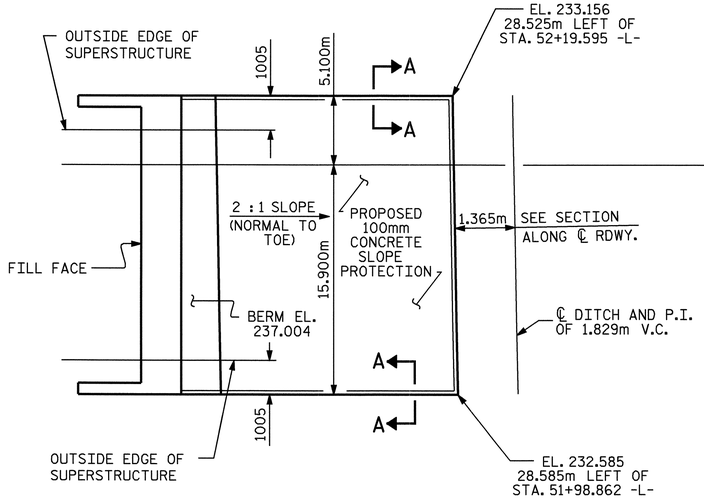

END BENT 1

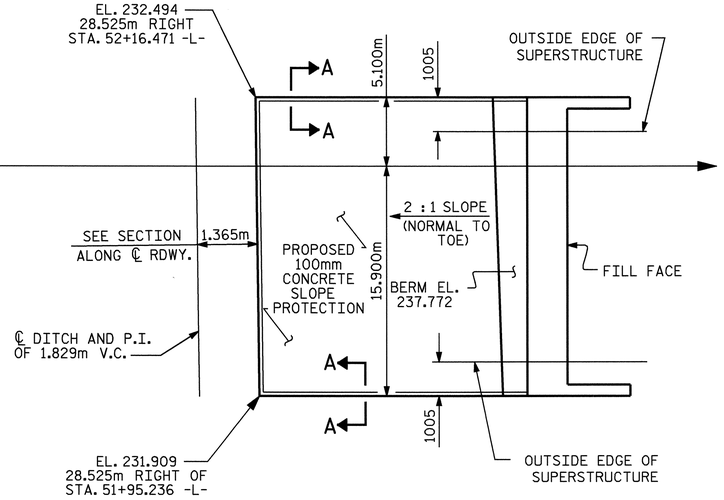

END BENT 2

PLAN OF SLOPE PROTECTION

NOTES

SLOPE PROTECTION SHALL BE PLACED UNDER THE ENDS OF THE BRIDGE AS SHOWN IN THE DETAILS. METHOD OF MEASUREMENT AND BASIS OF PAYMENT SHALL BE AS PRESCRIBED IN SECTION 462 OF THE STANDARD SPECIFICATIONS. FOR BERM WIDTH, SEE GENERAL DRAWING.

SLOPE PROTECTION SHALL CONSIST OF 100mm POURED-IN-PLACE CONCRETE PAVING AS SHOWN IN THE DETAILS ON THIS SHEET. CONCRETE SHALL BE CLASS "B". THE CONCRETE SURFACE SHALL BE FLOATED WITH A WOODEN FLOAT AND FINISHED. WELDED WIRE FABRIC REINFORCING SHALL BE 152 X 152 - W9.1 X W9.1, 1520mm WIDE. SLOPE PROTECTION SHALL BE POURED IN 1520mm STRIPS AS SHOWN IN THE "POURING DETAIL" WITH 600mm LONG #13 BARS PLACED ALONG THE SLOPE BETWEEN STRIPS AT 450mm MAXIMUM SPACING. SLOPE PROTECTION MAY BE POURED IN ALTERNATE 1220mm AND 1520mm STRIPS AS SHOWN IN THE "OPTIONAL POURING DETAIL" WITH ADJACENT RUNS OF WELDED WIRE FABRIC LAPPING AT LEAST 152mm. THE COST OF THE WELDED WIRE FABRIC AND #13 BARS, IF USED, SHALL BE INCLUDED IN THE CONTRACT UNIT PRICE BID PER SQUARE METER FOR SLOPE PROTECTION.

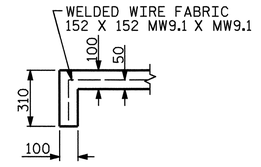

SECTION A-A

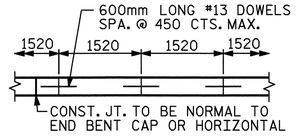

STRIP WIDTHS MAY VARY IN CURVED PORTION.

POURING DETAIL

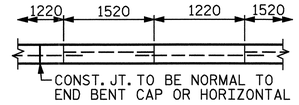

POUR A 1220mm STRIP FIRST. STRIP WIDTHS MAY VARY IN CURVED PORTION.

OPTIONAL POURING DETAIL

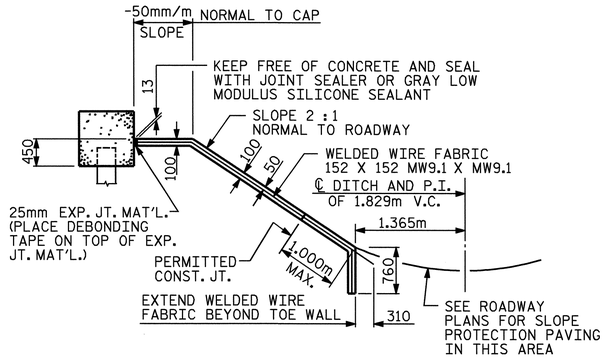

SECTION ALONG ℄ ROADWAY WHEN FILL CATCHES IN DITCH

BRIDGE @ STA. 52+13.020 -L-	100mm SLOPE PROTECTION	✳ WELDED WIRE FABRIC 1520mm WIDE
	SQUARE METERS	APPROX. METERS
END BENT 1	260	220
END BENT 2	325	270

✳ QUANTITY SHOWN IS BASED ON 1520mm POURS.

PROJECT NO. R-0609IA

GUILFORD COUNTY

STATION: 52+13.020 -L-

STATE OF NORTH CAROLINA
DEPARTMENT OF TRANSPORTATION
RALEIGH

STANDARD SLOPE PROTECTION DETAILS

NORTH CAROLINA PROFESSIONAL SEAL 23926 ENGINEER BRIAN C. HANKS
5/22/06

REVISIONS						SHEET NO.
NO.	BY:	DATE:	NO.	BY:	DATE:	S-163
1			3			TOTAL SHEETS
2			4			321

ASSEMBLED BY : J.L. WALTON	DATE : 10/7/04		
CHECKED BY : D.G. ELY	DATE : 11/15/04		
DRAWN BY : ELR 5/92	REV. 10/17/00	RWW/LES	
CHECKED BY : GRP 6/92	REV. 7/10/01	LES/RDR	
	REV. 5/7/03	RWW/JTE	

15-MAY-2006 15:31
G:\STRUCT~1\frye\FINAL_~1\Str5\R-0609~1.DGN
dely

STR #5

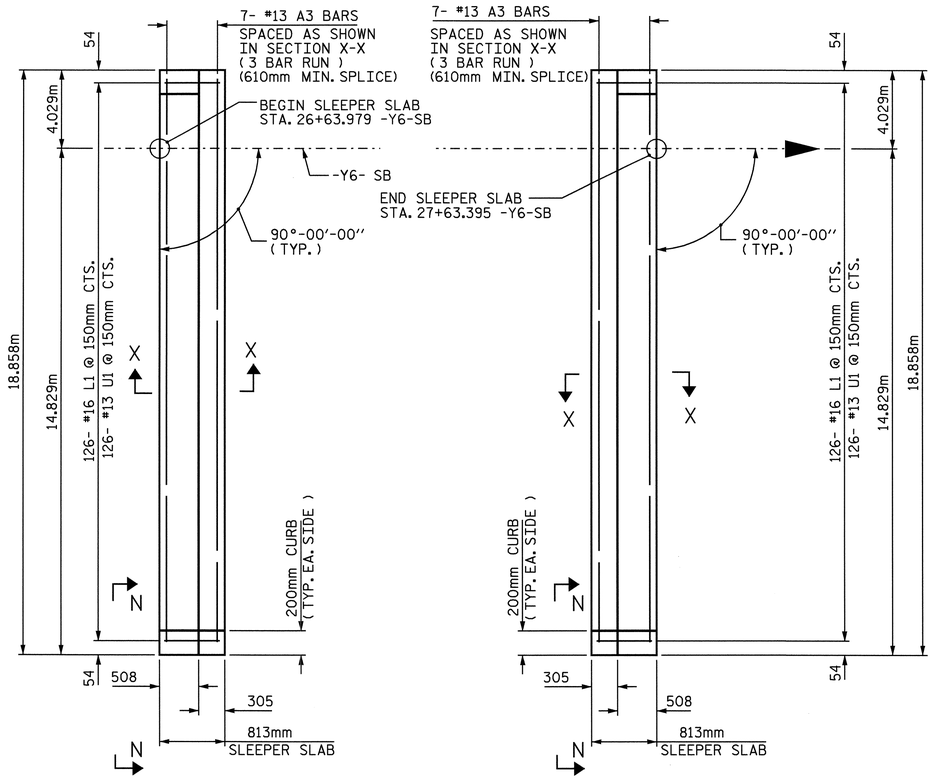

PLAN OF SLEEPER SLAB

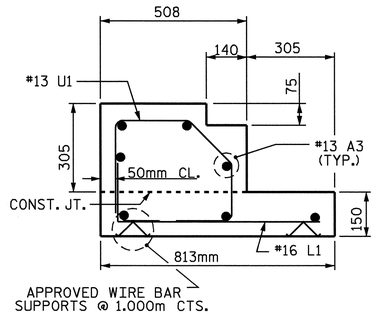

SECTION X-X

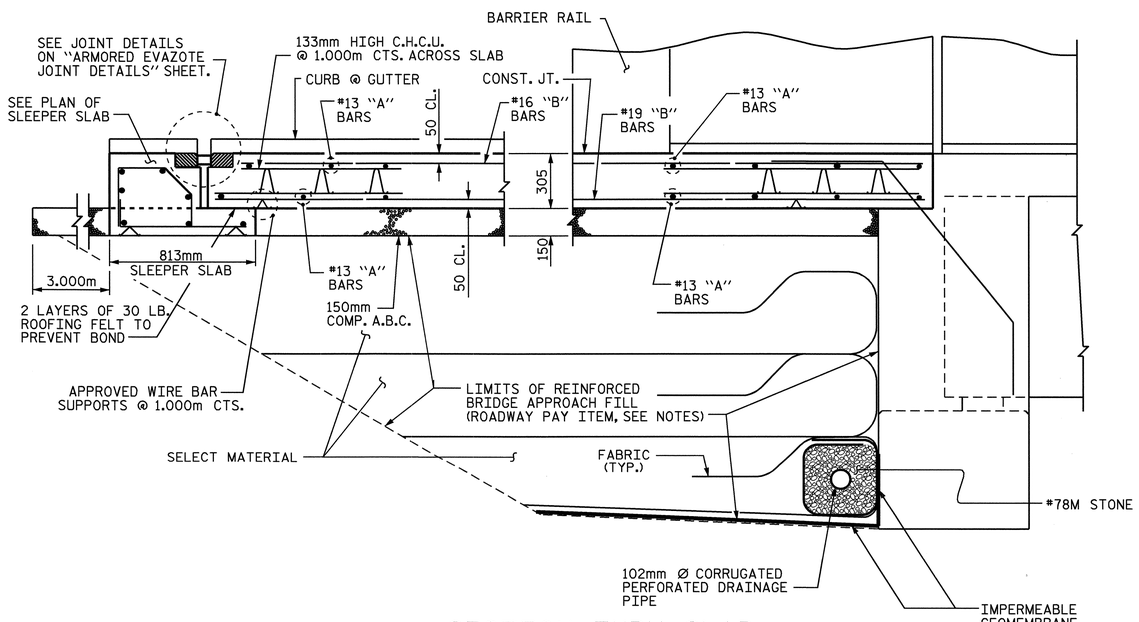

SECTION THRU SLAB

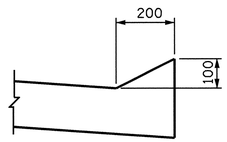

VIEW N-N

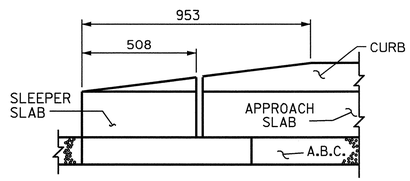

END OF CURB WITHOUT SHOULDER BERM GUTTER

CURB DETAILS

NOTES

APPROACH SLAB SHALL NOT BE CONSTRUCTED PRIOR TO COMPLETION OF THE BRIDGE DECK.

FOR REINFORCED BRIDGE APPROACH FILL INCLUDING FABRIC, IMPERMEABLE GEOMEMBRANE, 102mm Ø DRAINAGE PIPE, #78M STONE, AND SELECT MATERIAL, SEE ROADWAY PLANS.

TEMPORARY DRAINAGE AND TEMPORARY BERM AND SLOPE DRAINS WILL BE PAID FOR UNDER THE LUMP SUM PRICE FOR BRIDGE APPROACH SLAB.

AREA BETWEEN THE WINGWALL AND APPROACH SLAB SHALL BE GRADED TO DRAIN THE WATER AWAY FROM THE FILL FACE OF THE BRIDGE.

THE 150mm COMP. A.B.C. SHALL EXTEND 3.000m BEYOND THE END OF THE SLEEPER SLAB AND 300mm OUTSIDE OF EACH EDGE OF THE SLEEPER SLAB. THIS MATERIAL ALSO SHALL BE PLACED BETWEEN THE SLEEPER SLAB AND THE ABUTMENT AND 300mm OUTSIDE OF EACH EDGE OF THE APPROACH SLAB.

THE CONTRACTOR MAY USE 100mm TYPE B-25.0B ASPHALT CONCRETE BASE COURSE IN LIEU OF 150mm COMP. A.B.C. IF THIS OPTION IS USED, THE BASE COURSE SHALL EXTEND 300mm BEYOND THE END OF THE SLEEPER SLAB AND THE WIDTH SHALL BE THE SAME AS THAT OF THE SLEEPER SLAB. THIS MATERIAL ALSO SHALL BE PLACED BETWEEN THE SLEEPER SLAB AND THE ABUTMENT AND THE WIDTH SHALL BE THE SAME AS THAT OF THE APPROACH SLAB.

THE CONTRACTOR MAY USE 125mm CLASS "A" CONCRETE BASE IN LIEU OF 150mm COMP. A.B.C. IF THIS OPTION IS USED, THE CONCRETE BASE SHALL EXTEND 300mm BEYOND THE END OF THE SLEEPER SLAB AND THE WIDTH SHALL BE THE SAME AS THAT OF THE SLEEPER SLAB. THIS MATERIAL ALSO SHALL BE PLACED BETWEEN THE SLEEPER SLAB AND THE ABUTMENT AND THE WIDTH SHALL BE THE SAME AS THAT OF THE APPROACH SLAB. THE CONCRETE SHALL BE FINISHED TO A SMOOTH SURFACE AND A LAYER OF 13.6 Kg. ROOFING FELT SHALL BE PLACED BETWEEN THE CONCRETE BASE AND THE APPROACH SLAB TO PREVENT BOND. THE APPROACH SLAB SHALL NOT BE CAST UNTIL THE CONCRETE BASE HAS REACHED AN AGE OF THREE CURING DAYS.

BILL OF MATERIAL

FOR ONE APPROACH SLAB (2 REQ'D)

BAR	NO.	SIZE	TYPE	LENGTH	WEIGHT
✱A1	78	#13	STR	6660	516
A2	78	#13	STR	6600	512
✱A3	21	#13	STR	6660	139
✱B1	126	#16	STR	7380	1443
B2	126	#19	STR	7520	2118
✱B3	14	#16	STR	3560	77
✱B4	2	#16	3	1940	6
L1	126	#16	1	900	176
✱S1	50	#16	STR	980	76
✱S2	50	#16	1	1220	95
✱S3	20	#16	2	680	21
✱U1	126	#13	4	1320	165

REINFORCING STEEL =	2806 KG
✱EPOXY COATED REINF. STEEL =	2538 KG
CLASS AA CONCRETE BREAKDOWN	
POUR 1 SLEEPER SLAB AND CURB	5.3 C.M.
POUR 2 SLAB AND CURB	44.1 C.M.
POUR 3 RAIL	1.6 C.M.
CLASS AA CONCRETE	51.0 C.M.

BAR TYPES

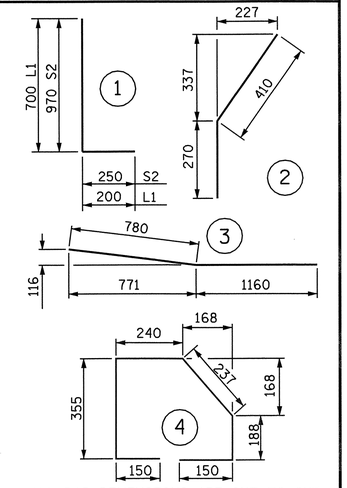

ALL BAR DIMENSIONS ARE OUT TO OUT

PROJECT NO. R-0609IA

GUILFORD COUNTY

STATION: 52+13.020 -L-

SHEET 1 OF 4

STATE OF NORTH CAROLINA
DEPARTMENT OF TRANSPORTATION
RALEIGH

BRIDGE APPROACH SLAB FOR RIGID PAVEMENT WITH BARRIER RAIL

REVISIONS						SHEET NO.
NO.	BY:	DATE:	NO.	BY:	DATE:	S-164
1			3			TOTAL SHEETS
2			4			321

NORTH CAROLINA PROFESSIONAL SEAL 23926 ENGINEER BRIAN C. HANKS
11/9/06

DRAWN BY : M. D. PISO DATE : 08/2004
CHECKED BY : J. L. WALTON DATE : 10/2004

09-NOV-2006 12:23
R:\Structures\frye\FINAL_PLANS\Str5\R0609IA_sd_AS_05.dgn
bhanks

STR. #5

G:\STRUCTØ2\frye\FINAL_Ø1\Str5\R0609IØ2.DGN
dely

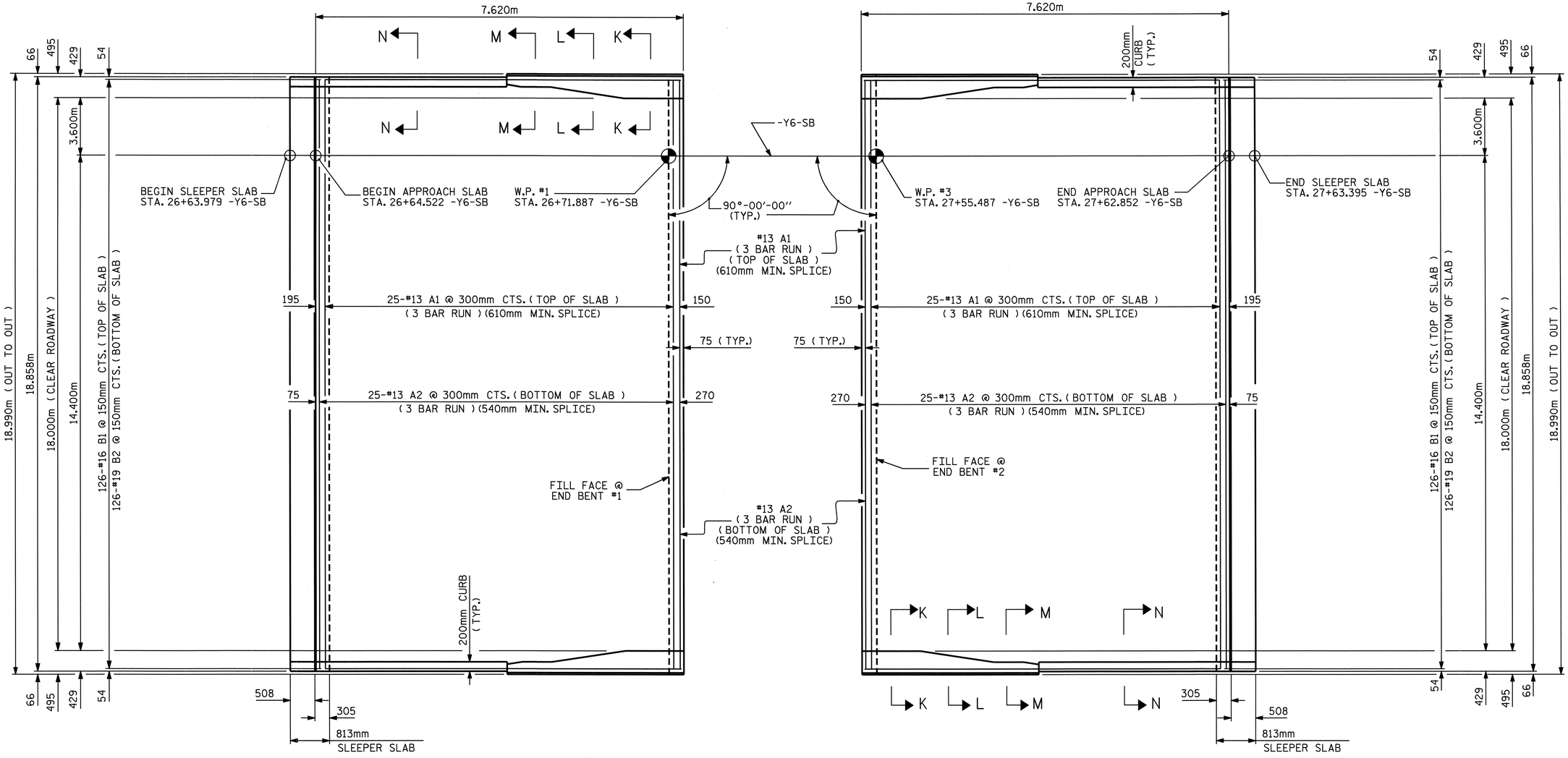

PLAN @ END BENT #1

PLAN @ END BENT #2

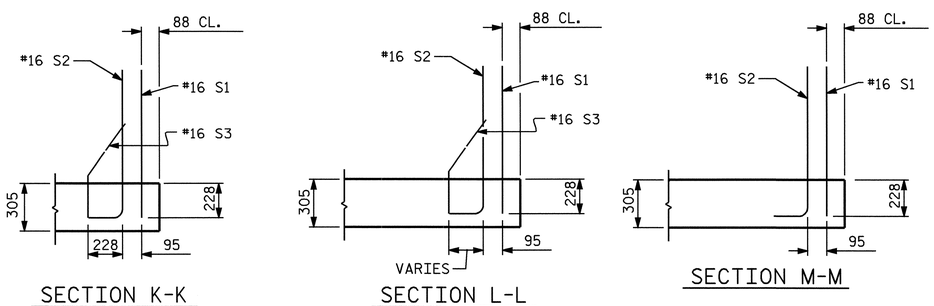

SECTION K-K

SECTION L-L

SECTION M-M

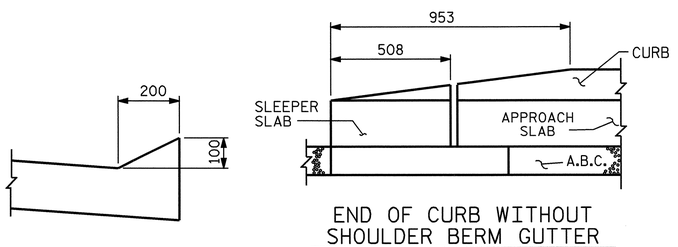

SECTION N-N

END OF CURB WITHOUT SHOULDER BERM GUTTER

CURB DETAILS

PROJECT NO. R-0609IA

GUILFORD COUNTY

STATION: 52+13.020 -L-

SHEET 2 OF 4

STATE OF NORTH CAROLINA
DEPARTMENT OF TRANSPORTATION
RALEIGH

BRIDGE APPROACH SLAB FOR RIGID PAVEMENT WITH BARRIER RAIL

NORTH CAROLINA PROFESSIONAL SEAL 23926 ENGINEER BRIAN C. HANKS
5/22/06

REVISIONS						SHEET NO.
NO.	BY:	DATE:	NO.	BY:	DATE:	S-165
1			3			TOTAL SHEETS
2			4			321

DRAWN BY : M. D. PISO DATE : 08/2004
CHECKED BY : J. L. WALTON DATE : 10/2004

STR. #5

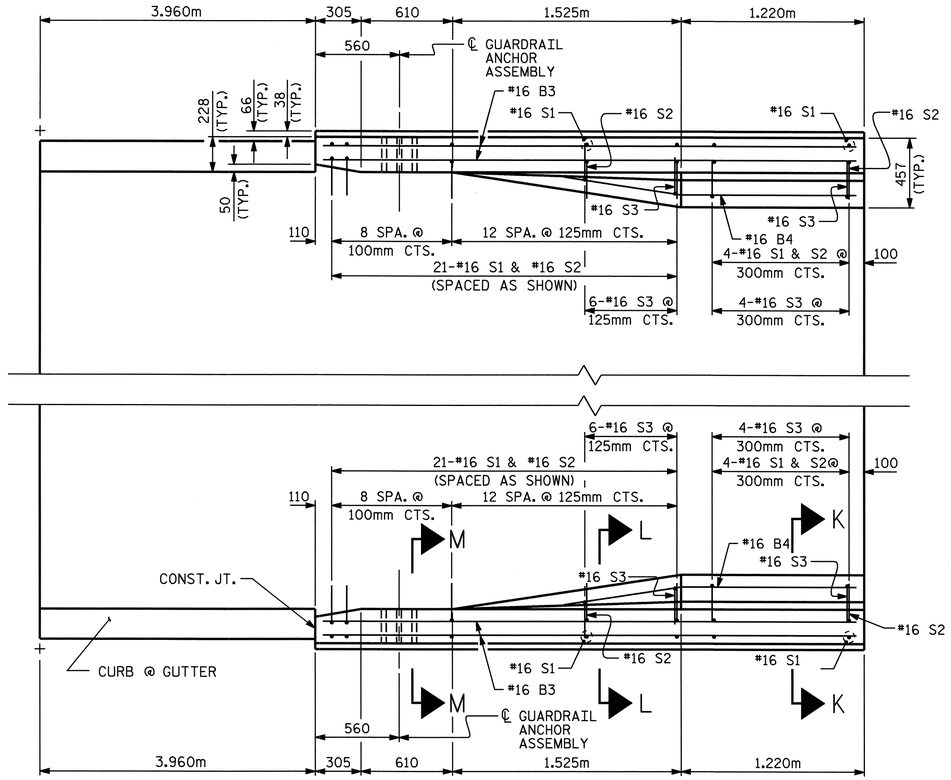

PLAN

BEGIN APPROACH SLAB SHOWN,
END APPROACH SLAB SIMILAR

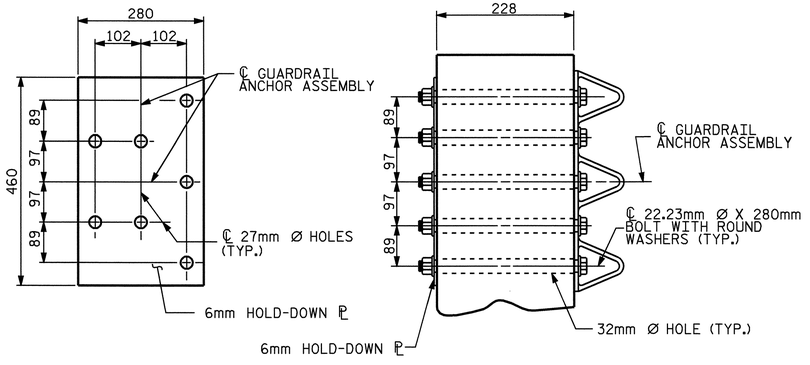

PLAN

SECTION E-E

NOTES

THE GUARDRAIL ANCHOR ASSEMBLY SHALL CONSIST OF A 6mm HOLD DOWN PLATE AND 7 - 22.23mm Ø BOLTS WITH NUTS AND WASHERS.

THE HOLD-DOWN PLATE SHALL CONFORM TO AASHTO M270 GRADE 250. AFTER FABRICATION, THE HOLD-DOWN PLATE SHALL BE GALVANIZED IN ACCORDANCE WITH AASHTO M111.

BOLTS SHALL CONFORM TO THE REQUIREMENTS OF ASTM A307 AND NUTS SHALL CONFORM TO THE REQUIREMENTS OF AASHTO M291M. BOLTS, NUTS AND WASHERS SHALL BE GALVANIZED. AT THE CONTRACTOR'S OPTION, STAINLESS STEEL BOLTS, NUTS AND WASHERS MAY BE USED AS AN ALTERNATE FOR THE 22.23mm Ø GALVANIZED BOLTS, NUTS AND WASHERS. THEY SHALL CONFORM TO OR EXCEED THE MECHANICAL REQUIREMENTS OF ASTM A307. THE USE OF THIS ALTERNATE SHALL BE APPROVED BY THE ENGINEER.

AFTER INSTALLATION, THE EXPOSED THREAD OF THE BOLT SHALL BE BURRED WITH A SHARP POINTED TOOL.

THE COST OF THE GUARDRAIL ANCHOR ASSEMBLIES WITH BOLTS, NUTS AND WASHERS COMPLETE IN PLACE, SHALL BE INCLUDED IN THE LUMP SUM CONTRACT PRICE BID FOR BRIDGE APPROACH SLABS.

THE 32mm Ø HOLES SHALL BE FORMED OR DRILLED WITH A CORE BIT. IMPACT TOOLS WILL NOT BE PERMITTED. ANY CONCRETE DAMAGED BY THIS WORK SHALL BE REPAIRED TO THE SATISFACTION OF THE ENGINEER.

GUARDRAIL ANCHOR ASSEMBLY DETAILS

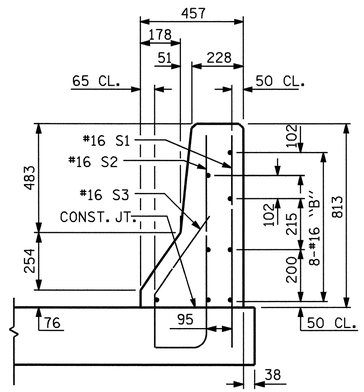

SECTION K-K

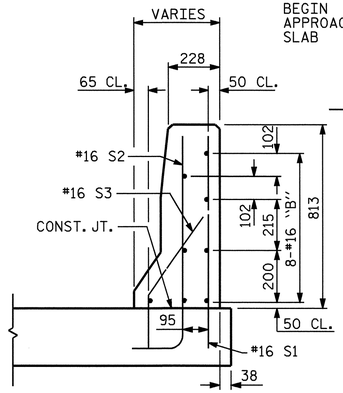

SECTION L-L

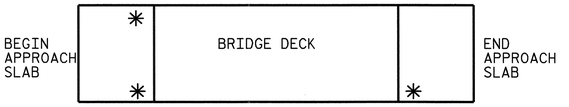

SKETCH SHOWING POINTS OF ATTACHMENT

✳ INDICATES POINTS OF ATTACHMENT

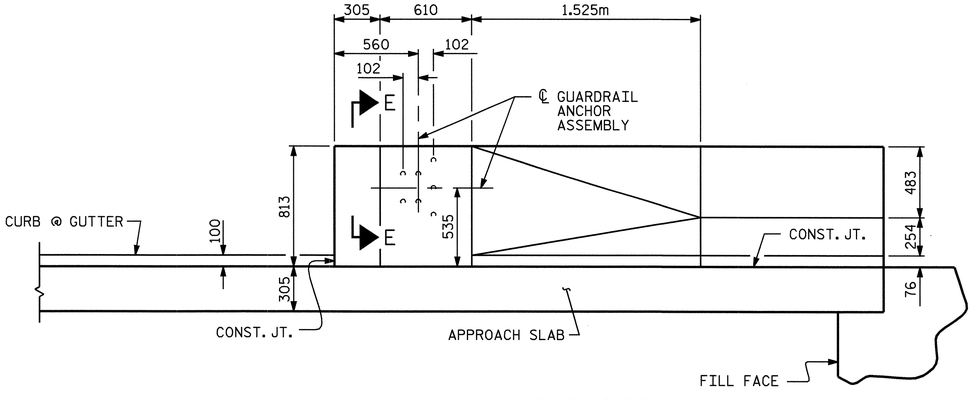

ELEVATION

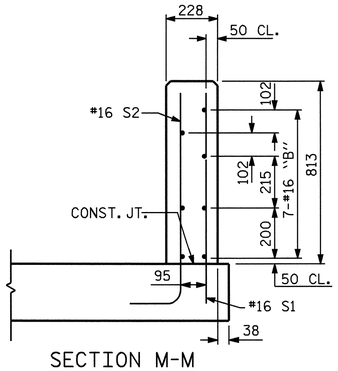

SECTION M-M

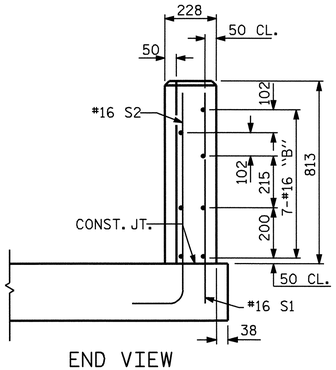

END VIEW

PROJECT NO. R-0609IA

GUILFORD COUNTY

STATION: 52+13.020 -L-

SHEET 3 OF 4

STATE OF NORTH CAROLINA
DEPARTMENT OF TRANSPORTATION
RALEIGH

BRIDGE APPROACH SLAB FOR RIGID PAVEMENT WITH BARRIER RAIL

REVISIONS						SHEET NO.
NO.	BY:	DATE:	NO.	BY:	DATE:	S-166
1			3			TOTAL SHEETS
2			4			321

NORTH CAROLINA PROFESSIONAL SEAL 23926 ENGINEER BRIAN C. HANKS
5/22/06

DRAWN BY : M. D. PISO DATE : 08/2004
CHECKED BY : J. L. WALTON DATE : 10/2004

15-MAY-2006 15:30
G:\STRUCT~1\frye\FINAL_~1\Str5\R0609I~2.DGN
daly

STR. #5

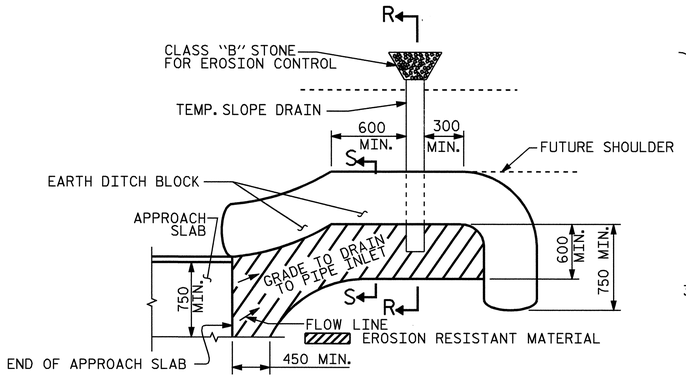

NOTE: IMMEDIATELY AFTER THE CONSTRUCTION OF THE APPROACH SLAB, THE CONTRACTOR SHALL PROVIDE TEMPORARY BERM AND SLOPE DRAIN. CONTRACTOR SHALL GRADE TO PIPE INLET AND PROVIDE EROSION RESISTANT MATERIAL AS SHOWN. THE EROSION RESISTANT MATERIAL SHALL BE EITHER 1) ASPHALT PLANT MIX, TYPE 1 OR TYPE 2, MIN. 50mm DEPTH, 2) EROSION CONTROL MAT, OR 3) CONCRETE, AS DIRECTED BY THE ENGINEER. THE SLOPE DRAIN SHALL CONSIST OF A NON-PERFORATED TEMPORARY DRAINAGE PIPE, 305mm IN DIAMETER.

PLAN VIEW

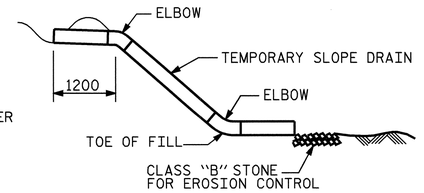

SECTION R-R

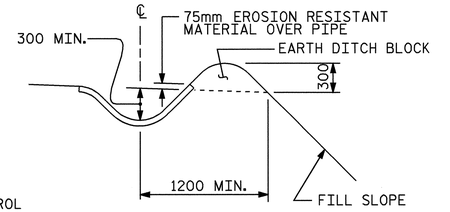

SECTION S-S

TEMPORARY BERM AND SLOPE DRAIN DETAILS

(TO BE USED WHEN SHOULDER BERM GUTTER IS REQUIRED)

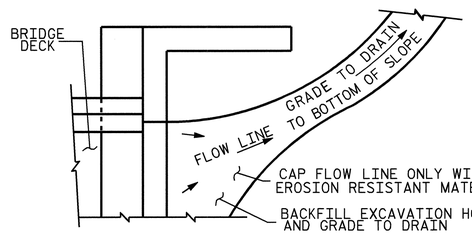

NOTE: IF THE APPROACH SLAB IS NOT CONSTRUCTED IMMEDIATELY AFTER THE BACKFILLING OF THE END BENT EXCAVATION, GRADE TO DRAIN TO THE BOTTOM OF THE SLOPE AND PROVIDE EROSION RESISTANT MATERIAL, SUCH AS FIBERGLASS ROVING OR AS DIRECTED BY THE ENGINEER TO PREVENT SOIL EROSION AND TO PROTECT THE AREA ADJACENT TO THE STRUCTURE. THE CONTRACTOR WILL BE REQUIRED TO REMOVE THESE MATERIALS PRIOR TO CONSTRUCTION OF THE APPROACH SLAB.

TEMPORARY DRAINAGE DETAIL

PROJECT NO. R-0609IA

GUILFORD COUNTY

STATION: 52+13.020 -L-

SHEET 4 OF 4

STATE OF NORTH CAROLINA
DEPARTMENT OF TRANSPORTATION
RALEIGH

BRIDGE APPROACH SLAB DETAILS

NORTH CAROLINA PROFESSIONAL SEAL 23926 ENGINEER BRIAN C. HANKS
5/22/06

REVISIONS						SHEET NO.
NO.	BY:	DATE:	NO.	BY:	DATE:	S-167
1			3			TOTAL SHEETS
2			4			321

DRAWN BY : M. D. PISO DATE : 08/2004
CHECKED BY : J. L. WALTON DATE : 10/2004

15-MAY-2006 15:29
G:\STRUCT~1\frye\FINAL_~1\Str5\R0609I~2.DGN
daly

STR. #5

STD. NO. BAS10SM

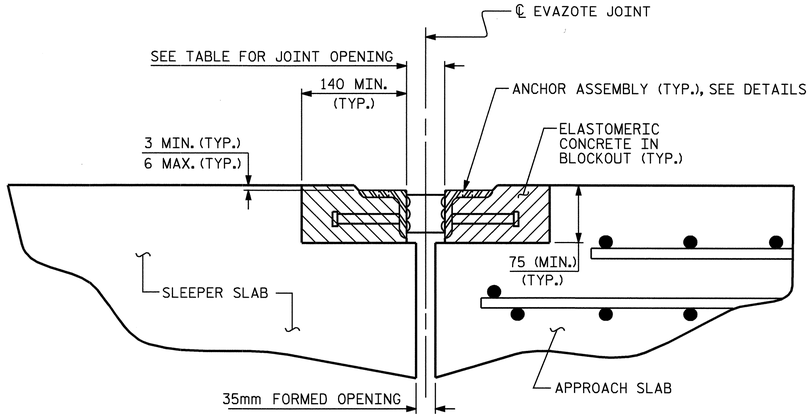

ARMORED JOINT DETAILS

SECTION NORMAL TO JOINT AT APPROACH SLAB

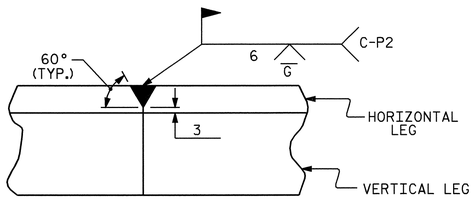

DETAIL- FIELD WELD SPLICE OF ANGLE

NOTES

ANGLES SHALL CONFORM TO AASHTO M270 GRADE 250 STEEL OR APPROVED EQUAL. ALL STUD ANCHORS SHALL CONFORM TO AASHTO M169 GRADES 1010 THRU 1020 OR APPROVED EQUAL.

STUD ANCHORS SHALL BE SHOP WELDED AND ALL HOLES SHALL BE SHOP DRILLED AS SHOWN ON THE PLANS. STUD ANCHORS SHALL BE ELECTRIC ARC END WELDED WITH COMPLETE FUSION.

UPON COMPLETION OF SHOP FABRICATION, THE ENTIRE ANCHOR ASSEMBLY SHALL BE METALLIZED. THE 12.70mm Ø STUD ANCHORS AND ANCHOR TABS NEED NOT BE METALLIZED. SEE SPECIAL PROVISION FOR THERMAL SPRAYED COATINGS (METALLIZATION).

ANCHOR ASSEMBLY SHALL BE MADE CONTINUOUS THE LENGTH OF THE JOINT FROM GUTTER TO GUTTER. FOR FIELD SPLICES AT ALL CROWN BREAK POINTS, THE ENDS OF THE STEEL ANGLES SHALL BE CUT PARALLEL TO THE BRIDGE CENTERLINE. FINISHED FIELD WELDS SHALL BE GROUND SMOOTH AND COATED WITH A MINIMUM THICKNESS OF 0.100mm OF ZINC-RICH PAINT IN ACCORDANCE WITH THE STANDARD SPECIFICATIONS.

ANCHOR ASSEMBLY SEGMENTS SHALL NOT BE LESS 3.6m NOR MORE THAN 6.1m IN LENGTH. SHORTER SEGMENTS MAY BE USED AT THE EDGE OF ROADWAY OR AT POINTS OF STAGED CONSTRUCTION.

THE ANCHOR ASSEMBLY SHALL BE SECURED AND LEVELED AS SHOWN IN THE "ARMORED JOINT ANCHOR ASSEMBLY DETAILS". NO SUBMITTALS ARE REQUIRED FOR 9.53mm Ø EXPANSION ANCHORS, NUTS OR WASHERS. THE CONTRACTOR MAY SUBMIT FOR APPROVAL AN ALTERNATE METHOD OF ALIGNING AND LEVELING THE ANGLES. THE ALTERNATE METHOD SHALL NOT INCLUDE ANY WELDING TO THE OUTSIDE FACE OF THE ANGLES.

AFTER THE ELASTOMERIC CONCRETE HAS BEEN CAST ON BOTH SIDES OF THE JOINT, REMOVE ANY EXCESS CONCRETE THAT COMES THROUGH THE WEEP HOLES AND THOROUGHLY CLEAN THE ANGLES. ANY DAMAGED STEEL SHALL BE COATED WITH A MINIMUM OF 0.100mm OF ZINC-RICH PAINT IN ACCORDANCE WITH THE STANDARD SPECIFICATIONS.

SEE SPECIAL PROVISIONS FOR EVAZOTE JOINT SEALS.

SEE SPECIAL PROVISIONS FOR ELASTOMERIC CONCRETE.

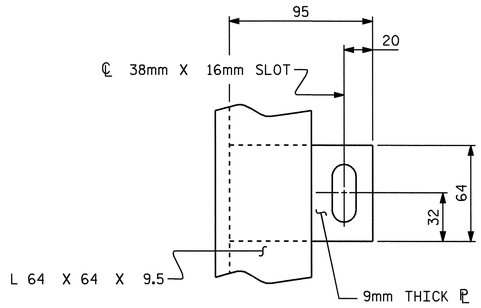

PLAN VIEW OF TAB

MOVEMENT AND SETTING AT EVAZOTE JOINT						
APPROACH SLAB NO.	SKEW ANGLE	NOMINAL UNCOMPRESSED SEAL WIDTH	TOTAL MOVEMENT (ALONG ℄ RDWY)	PERPENDICULAR JOINT OPENING AT 7° C	PERPENDICULAR JOINT OPENING AT 16° C	PERPENDICULAR JOINT OPENING AT 32° C
1	90°-00'-00"	80mm	41mm	67mm	60mm	48mm
2	90°-00'-00"	80mm	41mm	67mm	60mm	48mm

TOTAL MOVEMENT IS CALCULATED ALONG THE CENTERLINE OF ROADWAY.
JOINT OPENINGS ARE MEASURED PERPENDICULAR TO THE JOINT.

BILL OF MATERIAL		
APPROACH SLAB NO.	ELASTOMERIC CONCRETE * (CU. m)	TOTAL LENGTH OF ANGLE (m)
1	0.4	37.000m
2	0.4	37.000m

* BASED ON THE MINIMUM BLOCKOUT SHOWN.

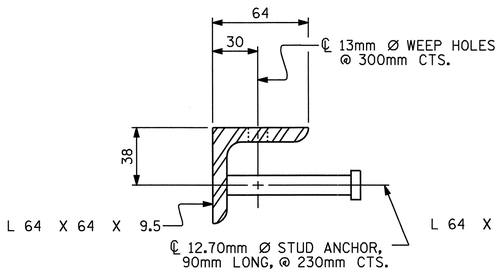

SECTION VIEW OF STUD

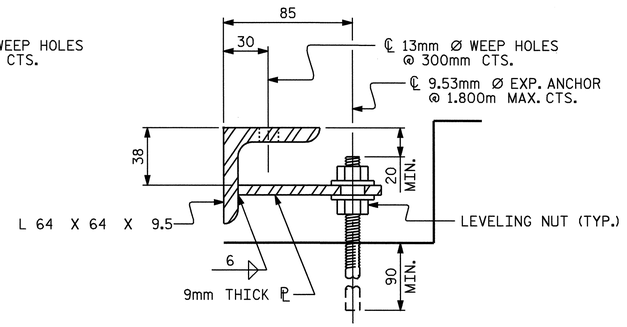

SECTION VIEW OF TAB

ARMORED JOINT ANCHOR ASSEMBLY DETAILS

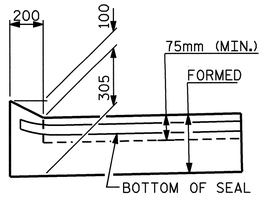

SECTION A-A

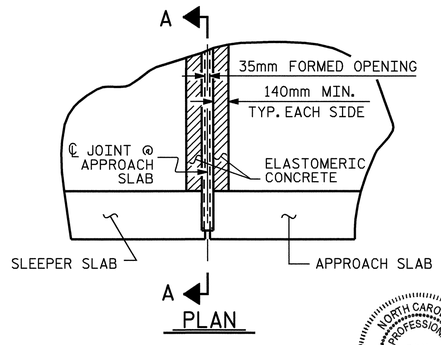

PLAN

PROJECT NO. R-0609IA
GUILFORD COUNTY
STATION: 51+13.020 -L-

STATE OF NORTH CAROLINA
DEPARTMENT OF TRANSPORTATION
RALEIGH

STANDARD ARMORED EVAZOTE JOINT DETAILS

REVISIONS						SHEET NO.
NO.	BY:	DATE:	NO.	BY:	DATE:	S-168
1			3			TOTAL SHEETS
2			4			321

NORTH CAROLINA PROFESSIONAL SEAL 23926 ENGINEER BRIAN C. HANKS
5/22/06

ASSEMBLED BY : R.W. WRIGHT	DATE : 6-05	
CHECKED BY : B.C. HANKS	DATE : 7-01-05	
DRAWN BY : EEM 1/96	REV. 10/17/00	RWW/LES
CHECKED BY : RGW 1/96	REV. 7/10/01	LES/RDR
	REV. 5/7/03RR	RWW/JTE

15-MAY-2006 15:29
G:\STRUCT~1\frye\FINAL_~1\Str5\R0609I~1.DGN
dely

STR. #5

STD. NO. AEJ1SM