09/08/99

TIP PROJECT: R-2245

CONTRACT: C201550

See Sheet 1-A For Index of Sheets
See Sheet 1-B For Conventional Symbols

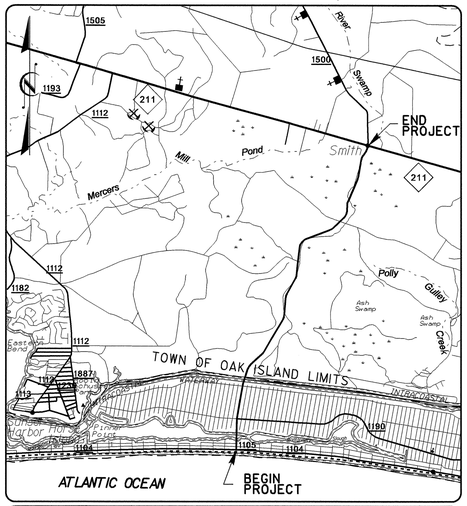

VICINITY MAP

STATE OF NORTH CAROLINA
DIVISION OF HIGHWAYS

BRUNSWICK COUNTY

STATE	STATE PROJECT REFERENCE NO.	SHEET NO.	TOTAL SHEETS
N.C.	R-2245	1	

STATE PROJ. NO.	F.A. PROJ. NO.	DESCRIPTION
34407.1.1	STP-1105(6)	P.E.
34407.3.1	STP-1105(7)	R/W & UTIL.
34407.2.3	STP-1105(17)	CONST.

LOCATION: NEW ROUTE FROM SR 1104 (BEACH DRIVE) TO NC 211 (SECOND BRIDGE TO OAK ISLAND)

TYPE OF WORK: GRADING, DRAINAGE, PAVING, SIGNALS, STRUCTURES AND CULVERT

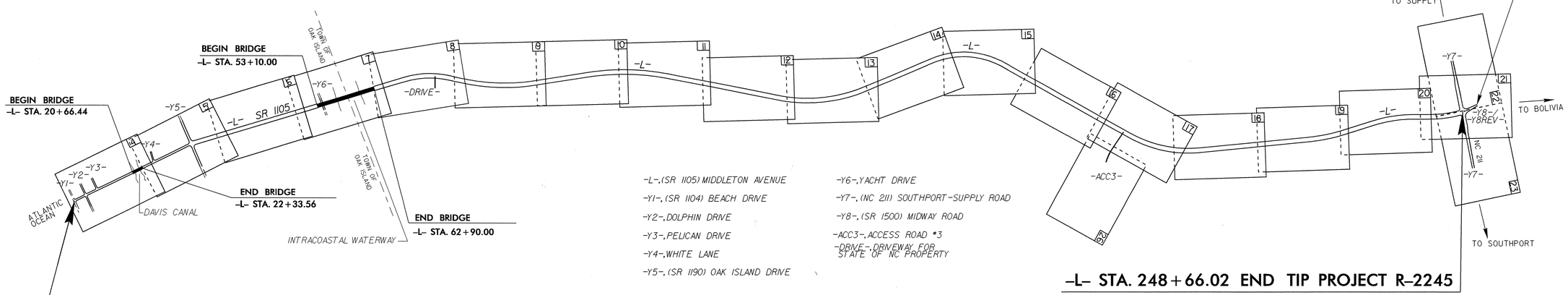

ACCESS IS NOT CONTROLLED FROM OCEAN BEACH DRIVE TO 735' SOUTH OF YACHT DRIVE.
ACCESS CONTROL IS LIMITED TO POINTS AS SHOWN ON THE PLANS FROM 735' SOUTH OF YACHT DRIVE TO NC 211.

GRAPHIC SCALES

50 25 0 50 100
PLANS

50 25 0 50 100
PROFILE (HORIZONTAL)

10 5 0 10 20
PROFILE (VERTICAL)

DESIGN DATA

ADT 2007 = 14500
ADT 2030 = 31000
DHV = 8 %
D = 55 %
T = 3 % *
V = 40-60 MPH
* (TTST 1% + DUAL 2%)
FUNC CLASS = RURAL COLLECTOR

PROJECT LENGTH

LENGTH ROADWAY TIP PROJECT R-2245 = 4.302 MI

LENGTH STRUCTURES TIP PROJECT R-2245 = 0.218 MI

TOTAL LENGTH OF TIP PROJECT R-2245 = 4.520 MI

Prepared In the Office of:
DIVISION OF HIGHWAYS
1000 Birch Ridge Dr., Raleigh NC, 27610

2006 STANDARD SPECIFICATIONS

RIGHT OF WAY DATE:
APRIL 29, 2005

LETTING DATE:
MAY 15, 2007

GLENN W. MUMFORD, PE
PROJECT ENGINEER

SUSAN C. LANCASTER, PE
PROJECT DESIGN ENGINEER

HYDRAULICS ENGINEER
NORTH CAROLINA PROFESSIONAL SEAL 19776 ENGINEER RAY D. LOVINGGOOD
SIGNATURE: Ray D Lovinggood 02 MAR 07 P.E.

ROADWAY DESIGN ENGINEER
NORTH CAROLINA PROFESSIONAL SEAL 22924 ENGINEER GLENN W. MUMFORD
SIGNATURE: 3/2/07 P.E.

DIVISION OF HIGHWAYS
STATE OF NORTH CAROLINA

STATE OF NORTH CAROLINA DEPARTMENT OF TRANSPORTATION

art mcmillan P.E.
STATE DESIGN ENGINEER

01-MAR-2007 09:44
r:\roadway\proj\r-2245_rdy_tsh.dgn
$$$$USERNAME$$$$

PROJECT REFERENCE NO.	SHEET NO.
R-2245	1-A

STATE OF NORTH CAROLINA
DIVISION OF HIGHWAYS

NORTH CAROLINA PROFESSIONAL SEAL 22924 ENGINEER GLENN W. MUMFORD
1/17/07

INDEX OF SHEETS

SHEET NUMBER	SHEET
1	TITLE SHEET – R-2245
1-A	INDEX OF SHEETS,GENERAL NOTES, AND STANDARD DRAWINGS (2006 SPECIFICATIONS)
1-B	CONVENTIONAL SYMBOLS
1-C THROUGH 1-F	SURVEY CONTROL SHEETS
1-G	CENTERLINE COORDINATE SHEET
2 THROUGH 2-E	PAVEMENT SCHEDULE, TYPICAL SECTIONS, WEDGING DETAILS
2-F	DETAIL OF PROPOSED WIDENING FOR ON-SITE DETOUR FOR -Y7- (NC 211)
2-G	DETAIL OF GRADING PLAN FOR INFILTRATION BASINS AND INFILTRATION SWALES
2-H	DETAIL OF CONCRETE BRIDGE SIDEWALK APPROACH
2-I	DETAIL OF 1'-6" TO 2'-9" CURB AND GUTTER TRANSITION SECTION
2-J	DETAIL OF PLACEMENT OF DROP INLET IN 2'-9" CURB AND GUTTER
2-K	DETAIL OF SPLITTER BOX
2-L	DETAIL OF TRAFFIC BEARING SPLITTER BOX
2-M	DETAIL OF ALUMINUM ENDWALL FOR FIVE PIPE CULVERTS
2-N	DETAIL OF ALUMINUM ENDWALL FOR FOUR PIPE CULVERTS
2-O	DETAIL OF ROCK PLATING
2-P	DETAIL OF REINFORCED SLOPE
3 (2 SHEETS)	SUMMARY OF QUANTITIES
3-A THROUGH 3-D	SUMMARY OF DRAINAGE (FOR PIPES 48" AND UNDER)
3-E	SUMMARY OF DRAINAGE (FOR PIPES 54" AND OVER)
3-F	SUMMARY OF GUARDRAIL
3-G	SUMMARY OF 48" WOVEN WIRE FENCE, 48" CHAIN LINK FENCE, REMOVAL OF EXISTING ASPHALT PAVEMENT, BREAKING OF EXISTING ASPHALT PAVEMENT, SUMMARY OF MILLING EXISTING ASPHALT PAVEMENT AND SUMMARY OF SHOULDER BERM GUTTER
3-H	EARTHWORK SUMMARY
3-I	PARCEL INDEX SHEET
4 THROUGH 26	PLAN SHEETS (SHEET 24 AND 25 REMOVED FROM PLANS)
27 THROUGH 39	PROFILE SHEETS
TCP-1 THROUGH TCP-13	TRAFFIC CONTROL PLANS
PM-1 THROUGH PM-7	PAVEMENT MARKING PLANS
EC-1 THROUGH EC-45	EROSION CONTROL PLANS
RF-1	REFORESTATION PLANS
SIGN-1 THROUGH SIGN-17	SIGNING PLANS
SIG-1 THROUGH SIG-19	SIGNAL PLANS
UC-1 THROUGH UC-9	UTILITY COORDINATION PLANS
UO-1 THROUGH UO-14	UTILITIES BY OTHERS
X-1	CROSS SECTION INDEX
X-A THROUGH X-C	CROSS SECTION SUMMARY SHEETS
X-2 THROUGH X-119	CROSS SECTIONS
C-1 THROUGH C-4	CULVERT PLANS
S-1 THROUGH S-25	STRUCTURE PLANS (DAVIS CANAL BRIDGE)
S-26 THROUGH S-98	STRUCTURE PLANS (INTRACOASTAL WATERWAY BRIDGE)
W-1 THROUGH W-2	BULKHEAD PLANS

EFF. 07-18-06

2006 ROADWAY STANDARD DRAWINGS

The following Roadway Standards as appear in "Roadway Standard Drawings" Highway Design Branch – N. C. Department of Transportation – Raleigh, N. C., Dated July 18, 2006 are applicable to this project and by reference hereby are considered a part of these plans:

STD.NO.	TITLE
DIVISION 2 – EARTHWORK	
200.03	Method of Clearing – Method III
225.02	Guide for Grading Subgrade – Secondary and Local
225.04	Method of Obtaining Superelevation – Two Lane Pavement
225.06	Method of Grading Sight Distance at Intersections
DIVISION 3 – PIPE CULVERTS	
300.01	Method of Pipe Installation – Method 'A'
300.03	Method of Structural Plate Pipe and Pipe Arch Installation – Method 'A'
310.10	Driveway Pipe Construction
DIVISION 4 – MAJOR STRUCTURES	
422.10	Reinforced Bridge Approach Fills
DIVISION 5 – SUBGRADE, BASES AND SHOULDERS	
560.01	Method of Shoulder Construction – High Side of Superelevated Curve – Method I
DIVISION 6 – ASPHALT BASES AND PAVEMENTS	
654.01	Pavement Repairs
DIVISION 8 – INCIDENTALS	
815.03	Pipe Underdrain and Blind Drain
838.01	Concrete Endwall for Single and Double Pipe Culverts – 15" thru 48" Pipe 90 Skew
838.11	Brick Endwall for Single and Double Pipe Culverts – 15" thru 48" Pipe 90 Skew
838.28	Reinforced Concrete Endwall – for Double and Triple 60" Pipes 90 Skew
838.45	Notes for Reinforced Concrete Endwall – Std. Dwg 838.21 thru 838.40
838.58	Reinforced Brick Endwall – for Double and Triple 60" Pipes 90 Skew
838.75	Notes for Reinforced Brick Endwall – Std. Dwg 838.51 thru 838.70
838.80	Precast Endwalls – 12" thru 72" Pipe 90 Skew
840.00	Concrete Base Pad for Drainage Structures
840.01	Brick Catch Basin – 12" thru 54" Pipe
840.02	Concrete Catch Basin – 12" thru 54" Pipe
840.03	Frame, Grates and Hood – for Use on Standard Catch Basin
840.14	Concrete Drop Inlet – 12" thru 30" Pipe
840.15	Brick Drop Inlet – 12" thru 30" Pipe
840.16	Drop Inlet Frame and Grates – for use with Std. Dwg 840.14 and 840.15
840.17	Concrete Grated Drop Inlet Type 'A' – 12" thru 72" Pipe
840.18	Concrete Grated Drop Inlet Type 'B' – 12" thru 36" Pipe
840.22	Frames and Wide Slot Sag Grates
840.25	Anchorage for Frames – Brick or Concrete
840.26	Brick Grated Drop Inlet Type 'A' – 12" thru 72" Pipe
840.27	Brick Grated Drop Inlet Type 'B' – 12" thru 36" Pipe
840.29	Frames and Narrow Slot Flat Grates
840.31	Concrete Junction Box – 12" thru 66" Pipe
840.32	Brick Junction Box – 12" thru 66" Pipe
840.34	Traffic Bearing Junction Box – for Use with Pipes 42" and Under
840.35	Traffic Bearing Grated Drop Inlet – for Cast Iron Double Frame and Grates
840.45	Precast Drainage Structure
840.46	Traffic Bearing Precast Drainage Structure
840.54	Manhole Frame and Cover
840.66	Drainage Structure Steps
846.01	Concrete Curb, Gutter and Curb & Gutter
846.04	Drop Inlet Installation in Shoulder Berm Gutter
848.01	Concrete Sidewalk
848.05	Wheelchair Ramp – Curb Cut
852.01	Concrete Islands
852.04	Method for Placement of Drop Inlets in Grassed Median – Using 1'-6" Curb and Gutter
852.06	Method for Placement of Drop Inlets in Concrete Islands
862.01	Guardrail Placement
862.02	Guardrail Installation
862.03	Structure Anchor Units
866.01	Chain Link Fence – 4', 5' and 6' High Fence
866.02	Woven Wire Fence – with Wood Post
876.02	Guide for Rip Rap at Pipe Outlets

GENERAL NOTES: 2006 SPECIFICATIONS

EFFECTIVE: 07-18-06
REVISED:

GRADING AND SURFACING OR RESURFACING AND WIDENING:

THE GRADE LINES SHOWN DENOTE THE FINISHED ELEVATION OF THE PROPOSED SURFACING AT GRADE POINTS SHOWN ON THE TYPICAL SECTIONS. WHERE NO GRADE LINES ARE SHOWN, THE PROFILES SHOWN DENOTE THE TOP ELEVATION OF THE EXISTING PAVEMENT ALONG THE CENTER LINE OF SURVEY ON WHICH THE PROPOSED RESURFACING WILL BE PLACED. GRADE LINES MAY BE ADJUSTED BY THE ENGINEER IN ORDER TO SECURE A PROPER TIE-IN.

CLEARING:

CLEARING ON THIS PROJECT SHALL BE PERFORMED TO THE LIMITS ESTABLISHED BY METHOD III.

SUPERELEVATION:

ALL CURVES ON THIS PROJECT SHALL BE SUPERELEVATED IN ACCORDANCE WITH STD. NO. 225.04 USING THE RATE OF SUPERELEVATION AND RUNOFF SHOWN ON THE PLANS. SUPERELEVATION IS TO BE REVOLVED ABOUT THE GRADE POINTS SHOWN ON THE TYPICAL SECTIONS.

SHOULDER CONSTRUCTION:

ASPHALT, EARTH, AND CONCRETE SHOULDER CONSTRUCTION ON THE HIGH SIDE OF SUPERELEVATED CURVES SHALL BE IN ACCORDANCE WITH STD. NO. 560.01.

SIDE ROADS:

THE CONTRACTOR WILL BE REQUIRED TO DO ALL NECESSARY WORK TO PROVIDE SUITABLE CONNECTIONS WITH ALL ROADS, STREETS, AND DRIVES ENTERING THIS PROJECT. THIS WORK WILL BE PAID FOR AT THE CONTRACT UNIT PRICE FOR THE PARTICULAR ITEMS INVOLVED.

UNDERDRAINS:

UNDERDRAINS SHALL BE CONSTRUCTED IN ACCORDANCE WITH STD. NO. 815.03 AT LOCATIONS DIRECTED BY THE ENGINEER.

GUARDRAIL:

THE GUARDRAIL LOCATIONS SHOWN ON THE PLANS MAY BE ADJUSTED DURING CONSTRUCTION AS DIRECTED BY THE ENGINEER. THE CONTRACTOR SHOULD CONSULT WITH THE ENGINEER PRIOR TO ORDERING GUARDRAIL MATERIAL.

TEMPORARY SHORING:

SHORING REQUIRED FOR THE MAINTENANCE OF TRAFFIC NOT SHOWN ON THE PLANS WILL BE PAID FOR AT THE CONTRACT PRICE FOR "TEMPORARY SHORING" OR "TEMPORARY SHORING-BARRIER SUPPORTED" DEPENDING UPON THE LOCATION OF THE SHORING.

END BENTS:

THE ENGINEER SHALL CHECK THE STRUCTURE END BENT PLANS, DETAILS, AND CROSS-SECTION PRIOR TO SETTING OF THE SLOPE STAKES FOR THE EMBANKMENT OR EXCAVATION APPROACHING A BRIDGE.

UTILITIES:

UTILITY OWNERS ON THIS PROJECT ARE TOWN OF OAK ISLAND, BRUNSWICK ELECTRIC MEMBERSHIP CORP., ATLANTIC TELEPHONE MEMBERSHIP CORP., BELLSOUTH, AND TIME WARNER

ANY RELOCATION OF EXISTING UTILITIES WILL BE ACCOMPLISHED BY OTHERS, EXCEPT AS SHOWN ON THE PLANS.

RIGHT-OF-WAY MARKERS:

ALL RIGHT-OF-WAY MARKERS ON THIS PROJECT SHALL BE PLACED BY OTHERS.

WHEELCHAIR RAMPS:

WHEELCHAIR RAMPS ARE SHOWN ON THE PLANS AT APPROXIMATE LOCATIONS. THE CONSTRUCTION OF ALL WHEELCHAIR RAMPS SHALL BE IN ACCORDANCE WITH DETAILS IN PLANS.

5/28/99
25-JAN-2007 11:02
r:\roadway\proj\r-2245_rdy_tsh.dgn
$$$$USERNAME$$$$

3/15/06

PROJECT REFERENCE NO.	SHEET NO.
R-2245	1-B

Note: Not to Scale

****S.U.E. = Subsurface Utility Engineering***

STATE OF NORTH CAROLINA
DIVISION OF HIGHWAYS

CONVENTIONAL PLAN SHEET SYMBOLS

BOUNDARIES AND PROPERTY:

- State Line
- County Line
- Township Line
- City Line
- Reservation Line
- Property Line
- Existing Iron Pin — EIP
- Property Corner
- Property Monument — ECM
- Parcel/Sequence Number — 123
- Existing Fence Line
- Proposed Woven Wire Fence
- Proposed Chain Link Fence
- Proposed Barbed Wire Fence
- Existing Wetland Boundary — WLB
- Proposed Wetland Boundary — WLB
- Existing Endangered Animal Boundary — EAB
- Existing Endangered Plant Boundary — EPB

BUILDINGS AND OTHER CULTURE:

- Gas Pump Vent or U/G Tank Cap
- Sign — S
- Well — W
- Small Mine
- Foundation
- Area Outline
- Cemetery
- Building
- School
- Church
- Dam

HYDROLOGY:

- Stream or Body of Water
- Hydro, Pool or Reservoir
- Jurisdictional Stream — JS
- Buffer Zone 1 — BZ 1
- Buffer Zone 2 — BZ 2
- Flow Arrow
- Disappearing Stream
- Spring
- Swamp Marsh
- Proposed Lateral, Tail, Head Ditch — FLOW
- False Sump

RAILROADS:

- Standard Gauge — CSX TRANSPORTATION
- RR Signal Milepost — MILEPOST 35
- Switch — SWITCH
- RR Abandoned
- RR Dismantled

RIGHT OF WAY:

- NCDOT GPS Control Point
- Baseline Control Point
- Existing Right of Way Marker
- Existing Right of Way Line
- Proposed Right of Way Line — RW
- Proposed Right of Way Line with Iron Pin and Cap Marker — RW
- Proposed Right of Way Line with Concrete or Granite Marker — RW
- Existing Control of Access — CA
- Proposed Control of Access — CA
- Existing Easement Line — E
- Proposed Temporary Construction Easement — E
- Proposed Temporary Drainage Easement — TDE
- Proposed Permanent Drainage Easement — PDE
- Proposed Permanent Utility Easement — PUE

ROADS AND RELATED FEATURES:

- Existing Edge of Pavement
- Existing Curb
- Proposed Slope Stakes Cut — C
- Proposed Slope Stakes Fill — F
- Proposed Wheel Chair Ramp — WCR
- Proposed Wheel Chair Ramp Curb Cut — WCC
- Curb Cut for Future Wheel Chair Ramp — CCFR
- Existing Metal Guardrail
- Proposed Guardrail
- Existing Cable Guiderail
- Proposed Cable Guiderail
- Equality Symbol
- Pavement Removal

VEGETATION:

- Single Tree
- Single Shrub
- Hedge
- Woods Line
- Orchard
- Vineyard — Vineyard

EXISTING STRUCTURES:

MAJOR:

- Bridge, Tunnel or Box Culvert — CONC
- Bridge Wing Wall, Head Wall and End Wall — CONC WW

MINOR:

- Head and End Wall — CONC HW
- Pipe Culvert
- Footbridge
- Drainage Box: Catch Basin, DI or JB — CB
- Paved Ditch Gutter
- Storm Sewer Manhole — S
- Storm Sewer — S

UTILITIES:

POWER:

- Existing Power Pole
- Proposed Power Pole
- Existing Joint Use Pole
- Proposed Joint Use Pole
- Power Manhole — P
- Power Line Tower
- Power Transformer
- U/G Power Cable Hand Hole — HH
- H-Frame Pole
- Recorded U/G Power Line — P
- Designated U/G Power Line (S.U.E.*) — P

TELEPHONE:

- Existing Telephone Pole
- Proposed Telephone Pole
- Telephone Manhole — T
- Telephone Booth
- Telephone Pedestal — T
- Telephone Cell Tower
- U/G Telephone Cable Hand Hole — HH
- Recorded U/G Telephone Cable — T
- Designated U/G Telephone Cable (S.U.E.*) — T
- Recorded U/G Telephone Conduit — TC
- Designated U/G Telephone Conduit (S.U.E.*) — TC
- Recorded U/G Fiber Optics Cable — T FO
- Designated U/G Fiber Optics Cable (S.U.E.*) — T FO

WATER:

- Water Manhole — W
- Water Meter
- Water Valve
- Water Hydrant
- Recorded U/G Water Line — W
- Designated U/G Water Line (S.U.E.*) — W
- Above Ground Water Line — A/G Water

TV:

- TV Satellite Dish
- TV Pedestal — C
- TV Tower
- U/G TV Cable Hand Hole — HH
- Recorded U/G TV Cable — TV
- Designated U/G TV Cable (S.U.E.*) — TV
- Recorded U/G Fiber Optic Cable — TV FO
- Designated U/G Fiber Optic Cable (S.U.E.*) — TV FO

GAS:

- Gas Valve
- Gas Meter
- Recorded U/G Gas Line — G
- Designated U/G Gas Line (S.U.E.*) — G
- Above Ground Gas Line — A/G Gas

SANITARY SEWER:

- Sanitary Sewer Manhole
- Sanitary Sewer Cleanout
- U/G Sanitary Sewer Line — SS
- Above Ground Sanitary Sewer — A/G Sanitary Sewer
- Recorded SS Forced Main Line — FSS
- Designated SS Forced Main Line (S.U.E.*) — FSS

MISCELLANEOUS:

- Utility Pole
- Utility Pole with Base
- Utility Located Object
- Utility Traffic Signal Box — S
- Utility Unknown U/G Line — ?UTL
- U/G Tank; Water, Gas, Oil
- A/G Tank; Water, Gas, Oil
- U/G Test Hole (S.U.E.*)
- Abandoned According to Utility Records — AATUR
- End of Information — E.O.I.

PROJECT REFERENCE NO.	SHEET NO.
34407.3.1	1-C
Location and Surveys	

SURVEY CONTROL SHEET R-2245

NCGS STATION "WALTER"
LOCALIZED PROJECT COORDINATES
N= 63912.4150
E= 2249240.1730

DATUM DESCRIPTION

THE LOCALIZED COORDINATE SYSTEM DEVELOPED FOR THIS PROJECT IS BASED ON THE STATE PLANE COORDINATES ESTABLISHED BY NCDOT FOR MONUMENT "R2245A-7" WITH NAD 83 STATE PLANE GRID COORDINATES OF NORTHING: 66,102.0500(ft) EASTING: 2,255,060.5920(ft) THE AVERAGE COMBINED GRID FACTOR USED ON THIS PROJECT (GROUND TO GRID) IS: 1.000142380 THE N.C. LAMBERT GRID BEARING AND LOCALIZED HORIZONTAL GROUND DISTANCE FROM "R2245A-7" TO -L- STATION IS S 5° 33' 22.7" W 5,177.4734 ft ALL LINEAR DIMENSIONS ARE LOCALIZED HORIZONTAL DISTANCES VERTICAL DATUM USED IS NGVD 29

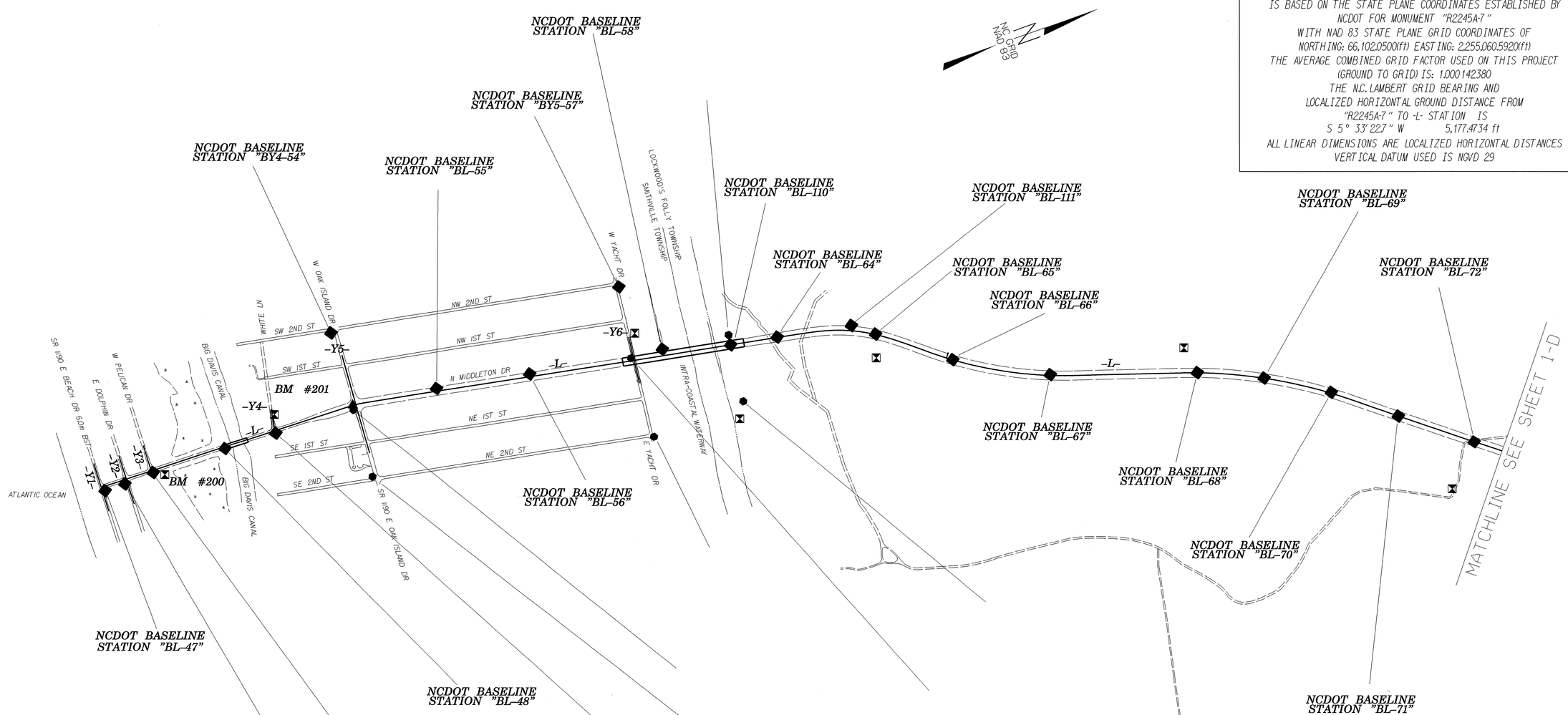

NOTE: DRAWING NOT TO SCALE

NOTES:

1. THE SITE CALIBRATION SHOWN IS BASED UPON A NETWORK TIED TO THE HARN (HIGH ACCURACY REFERENCE NETWORK) NAD 83/95 ADJUSTMENT. THIS CALIBRATION WILL ALLOW THE END USER TO WORKWITHIN THE SAME COORDINATE SYSTEM WHEN USING RTK (REAL TIME KINEMATIC) GPS AND A LOCAL BASE STATION. IF ANOTHER SYSTEM SUCH AS VRS (VIRTUAL REFERENCE STATION) IS USED, ADDITIONAL FIELD TIES MAY BE NEEDED TO REDUCE POSSIBLE ERRORS, OR BIASES.

2. THE CONTROL DATA FOR THIS PROJECT CAN BE FOUND ELECTRONICALLY BY SELECTING PROJECT CONTROL DATA AT:
HTTP://WWW.DOH.DOT.STATE.NC.US/PRECONSTRUCT/HIGHWAY/LOCATION/PROJECT/

THE FILES TO BE FOUND ARE AS FOLLOWS:
R2245_LS_GPSCALIB_060810.HTML
R2245_LS_WGS84_060810.TXT
R2245_LS_LOCAL_060810.TXT
R2245_LS_CONTROL_050311.TXT

THE WGS84 AND LOCAL FILES ARE COMMA DELIMITED AND CAN BE USED TO REPRODUCE THE SITE CALIBRATION FOR THE END USER'S GPS EQUIPMENT. IF FURTHER INFORMATION IS NEEDED, PLEASE CONTACT THE LOCATION AND SURVEYS UNIT.

◎ INDICATES GEODETIC CONTROL MONUMENTS USED OR SET FOR HORIZONTAL PROJECT CONTROL BY THE NCDOT LOCATION AND SURVEYS UNIT.
PROJECT CONTROL ESTABLISHED USING GLOBAL POSITIONING SYSTEM.
NETWORK ESTABLISHED FROM EXISTING HARN MONUMENTATION
SEE GPS CALIBRATION SHEET FOR HORIZONTAL AND VERTICAL COORDINATE VALUES.

6/2/99
18-JAN-2007 13:03
r:\roadway\proj\r2245_ls_lc_061013.dgn
$$$$USERNAME$$$$

6/2/99

PROJECT REFERENCE NO.	SHEET NO.
34407.3.1	1-D
Location and Surveys	

SURVEY CONTROL SHEET R-2245

DATUM DESCRIPTION

THE LOCALIZED COORDINATE SYSTEM DEVELOPED FOR THIS PROJECT
IS BASED ON THE STATE PLANE COORDINATES ESTABLISHED BY
NCDOT FOR MONUMENT "R2245A-7"
WITH NAD 83 STATE PLANE GRID COORDINATES OF
NORTHING: 66,102.0500(ft) EASTING: 2,255,060.5920(ft)
THE AVERAGE COMBINED GRID FACTOR USED ON THIS PROJECT
(GROUND TO GRID) IS: 1.000142380
THE N.C. LAMBERT GRID BEARING AND
LOCALIZED HORIZONTAL GROUND DISTANCE FROM
"R2245A-7" TO -L- STATION IS
5,177.4734 ft
ALL LINEAR DIMENSIONS ARE LOCALIZED HORIZONTAL DISTANCES
VERTICAL DATUM USED IS NGVD 29

NCGS STATION "LEROY"
LOCALIZED PROJECT COORDINATES
N= 92714.2870
E= 2258413.8550

NCGS STATION "SOUTHPORT WESTBASE"
LOCALIZED PROJECT COORDINATES
N= 83832.7610
E= 2256791.3230

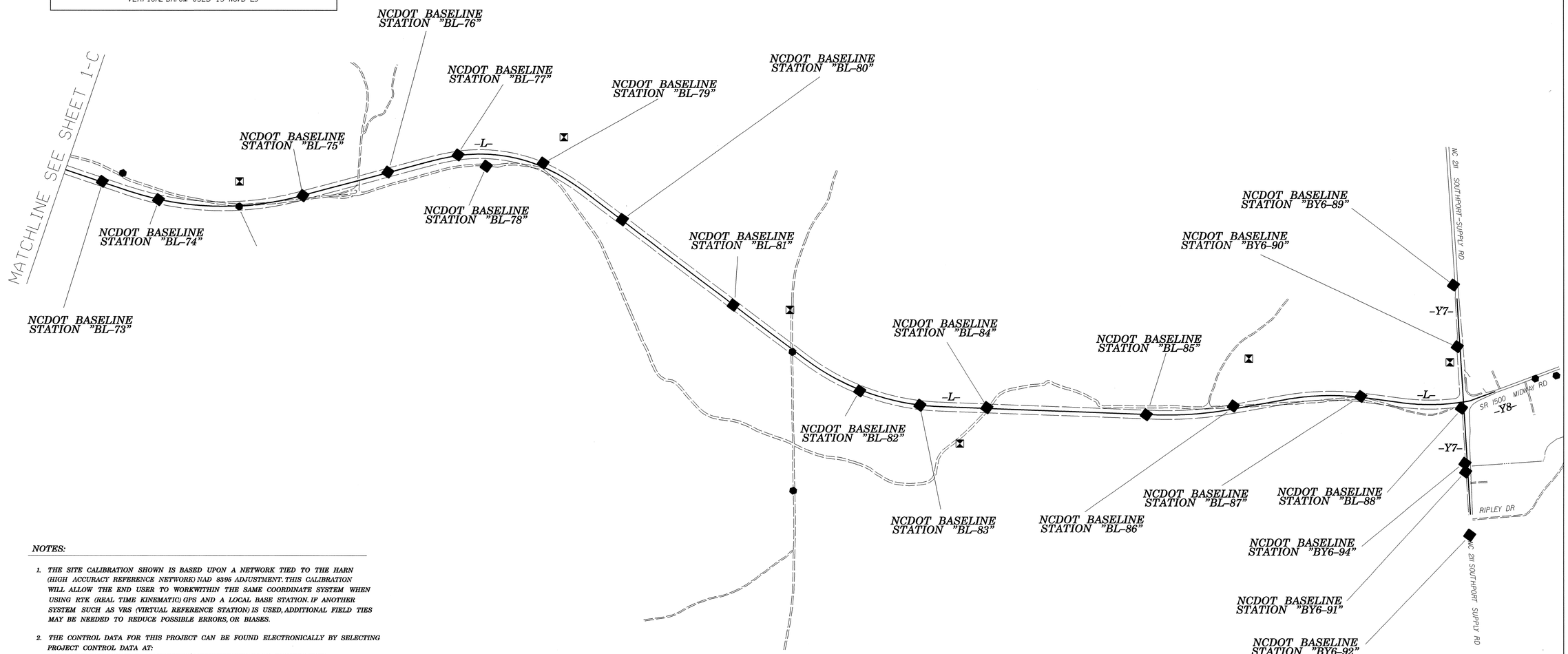

NCGS STATION "ROAD"
LOCALIZED PROJECT COORDINATES
N = 80009.9800
E = 2270521.5490

NOTES:

1. THE SITE CALIBRATION SHOWN IS BASED UPON A NETWORK TIED TO THE HARN (HIGH ACCURACY REFERENCE NETWORK) NAD 83/95 ADJUSTMENT. THIS CALIBRATION WILL ALLOW THE END USER TO WORKWITHIN THE SAME COORDINATE SYSTEM WHEN USING RTK (REAL TIME KINEMATIC) GPS AND A LOCAL BASE STATION. IF ANOTHER SYSTEM SUCH AS VRS (VIRTUAL REFERENCE STATION) IS USED, ADDITIONAL FIELD TIES MAY BE NEEDED TO REDUCE POSSIBLE ERRORS, OR BIASES.

2. THE CONTROL DATA FOR THIS PROJECT CAN BE FOUND ELECTRONICALLY BY SELECTING PROJECT CONTROL DATA AT:
HTTP://WWW.DOH.DOT.STATE.NC.US/PRECONSTRUCT/HIGHWAY/LOCATION/PROJECT/

THE FILES TO BE FOUND ARE AS FOLLOWS:
R2245_LS_GPSCALIB_060810.HTML
R2245_LS_WGS84_060810.TXT
R2245_LS_LOCAL_060810.TXT
R2245_LS_CONTROL_050311.TXT

THE WGS84 AND LOCAL FILES ARE COMMA DELIMITED AND CAN BE USED TO REPRODUCE THE SITE CALIBRATION FOR THE END USER'S GPS EQUIPMENT. IF FURTHER INFORMATION IS NEEDED, PLEASE CONTACT THE LOCATION AND SURVEYS UNIT.

© INDICATES GEODETIC CONTROL MONUMENTS USED OR SET FOR HORIZONTAL PROJECT CONTROL BY THE NCDOT LOCATION AND SURVEYS UNIT.
PROJECT CONTROL ESTABLISHED USING GLOBAL POSITIONING SYSTEM.
NETWORK ESTABLISHED FROM EXISTING HARN MONUMENTATION
SEE GPS CALIBRATION SHEET FOR HORIZONTAL AND VERTICAL COORDINATE VALUES.

NOTE: DRAWING NOT TO SCALE

18-JAN-2007 15:32
r:\roadway\proj\r2245_ls_ld_061013.dgn
es\LOCATIONSURVEYS\

PROJECT REFERENCE NO.	SHEET NO.
R-2245	1-E
LOCATION AND SURVEYS	

SURVEY CONTROL SHEET

CONTROL DATA

-BL-

POINT	DESC.	NORTH	EAST	ELEVATION	L STATION	OFFSET
47	BL-47	60978.6750	2254594.4580	8.44	10·20.43	33.81 RT
50	BL-50	61147.6390	2254592.4390	6.88	11·89.33	28.58 RT
51	BL-51	61390.5010	2254585.1740	6.85	14·32.01	16.70 RT
48	BL-48	61996.9280	2254594.0400	17.85	20·38.49	14.02 RT
53	BL-53	62421.0870	2254609.0650	17.75	24·62.86	20.97 RT
3	GPS MON R2245A-3	63067.1700	2254629.9550	21.92	31·09.22	29.56 RT
55	BL-55	63753.5730	2254696.4940	24.94	38·01.66	21.76 LT
56	BL-56	64497.0950	2254830.7890	25.97	45·57.22	21.62 LT
5	GPS MON R2245A-5	65304.1990	2254977.2150	21.65	53·77.50	20.83 LT
58	BL-58	65564.4292	2254993.3870	5.87	56·36.46	51.12 LT
7	GPS MON R2245A-7	66102.0500	2255060.5920	38.26	61·77.47	80.44 LT
110	BL-110	66092.3350	2255140.5960	37.73	61·82.12	0.02 RT
64	BL-64	66463.9240	2255205.6410	50.54	65·59.35	1.95 LT
111	BL-111	67054.5960	2255314.1830	34.59	71·53.62	39.43 LT
65	BL-65	67214.7960	2255442.6450	19.86	73·52.48	0.97 LT
66	BL-66	67729.8500	2255839.4250	19.49	80·02.83	0.51 RT
67	BL-67	68426.8680	2256209.8440	26.23	87·94.86	5.21 LT
68	BL-68	69542.4300	2256581.9590	37.17	99·71.19	5.04 RT
69	BL-69	70032.0070	2256799.3550	38.27	105·10.15	23.42 RT
70	BL-70	70501.9320	2257085.5700	38.49	110·63.04	1.23 LT
71	BL-71	70945.0340	2257440.6490	44.82	116·30.83	4.32 RT
72	BL-72	71448.7490	2257837.4150	47.35	122·72.04	5.20 RT
73	BL-73	71891.0220	2258175.8870	53.32	128·28.93	1.82 LT
74	BL-74	72281.9850	2258474.1010	54.41	133·20.29	7.98 RT
14	GPS MON R2245-14	72897.2110	2258749.0590	56.95	139·93.88	9.48 RT
75	BL-75	73426.8550	2258838.3290	60.25	145·30.43	5.45 RT
76	BL-76	74160.0070	2258884.6460	62.98	152·64.96	1.46 LT
77	BL-77	74758.3700	2258941.8910	57.84	158·66.22	1.54 LT
78	BL-78	74948.8470	2259106.5850	55.59	161·04.69	103.91 RT
79	BL-79	75404.9010	2259236.9130	57.58	165·77.44	27.15 LT
80	BL-80	75871.3950	2259898.7970	60.26	173·83.74	2.29 LT
81	BL-81	76507.5410	2260871.4430	59.75	185·45.91	7.27 RT
15	GPS MON R2245-15	76843.8060	2261400.7820	59.29	191·72.86	20.75 RT
82	BL-82	77264.0570	2261893.3180	56.80	198·18.08	14.07 RT
83	BL-83	77697.0990	2262171.5750	54.39	203·31.45	7.37 RT
84	BL-84	78216.1680	2262373.5740	54.89	208·88.05	2.50 LT
85	BL-85	79447.7060	2262867.2760	54.27	222·14.82	6.20 RT
86	BL-86	80155.1960	2263037.8100	52.02	229·45.26	19.14 LT
87	BL-87	81181.8720	2263313.0420	52.41	240·10.62	3.99 LT
88	BL-88	81940.3340	2263681.7400	46.02	248·46.78	33.29 RT
17	GPS MON R2245-17	82601.6790	2263650.7130	44.75	OUTSIDE PROJECT LIMITS	

-BY4-

POINT	DESC.	NORTH	EAST	ELEVATION	Y5 STATION	OFFSET
54	BY4-54	63103.6271	2253996.0990	20.75	OUTSIDE PROJECT LIMITS	
3	GPS MON R2245A-3	63067.1700	2254629.9550	21.92	14·41.02	32.95 RT
4	GPS MON R2245A-4	63034.8220	2255195.3820	21.38	OUTSIDE PROJECT LIMITS	

-BY5-

POINT	DESC.	NORTH	EAST	ELEVATION	Y6 STATION	OFFSET
57	BY5-57	65399.9184	2254409.2149	21.53	OUTSIDE PROJECT LIMITS	
5	GPS MON R2245A-5	65304.1990	2254977.2150	21.65	11·67.80	18.97 RT
6	GPS MON R2245A-6	65268.7060	2255632.8220	23.77	OUTSIDE PROJECT LIMITS	

-BY6-

POINT	DESC.	NORTH	EAST	ELEVATION	Y7 STATION	OFFSET
89	BY6-89	82215.9230	2262693.8430	45.17	OUTSIDE PROJECT LIMITS	
90	BY6-90	82077.0240	2263185.7710	44.67	13·98.06	23.02 RT
88	BL-88	81940.3340	2263681.7400	46.08	19·12.51	20.37 RT
94	BY6-94	81815.6940	2264125.5230	46.93	23·73.46	20.25 RT
91	BY6-91	81797.8800	2264194.6810	46.36	24·44.86	18.69 RT
92	BY6-92	81656.7330	2264700.1020	51.60	OUTSIDE PROJECT LIMITS	

****
BM 200 ELEVATION = 7.95
N 61472 E 2254632
L STATION 15·14 62 RIGHT
BOLT IN LEFT FRONT LEG OF WATER TOWER
****
****
BM201 ELEVATION = 18.90
N 62460 E 2254464
L STATION 24·99 125 LEFT
RRS SET IN 10" OAK
****
****
BM202 ELEVATION = 22.35
N 65398 E 2254800
L STATION 54·38 212 LEFT
RRS SET IN 12" OAK
****
****
BM204 ELEVATION = 29.92
N 65965 E 2255724
L STATION 61·60 597 RIGHT
-R/R SPIKE IN A 12IN OAK
****
****
BM205 ELEVATION = 24.43
N 67157 E 2255623
L STATION 74·07 182 RIGHT
-R/R SPIKE IN A 2FT OAK
****
****
BM206 ELEVATION = 37.64
N 69506 E 2256360
L STATION 98·69 196 LEFT
-R/R SPIKE IN A 6IN OAK
****
****
BM207 ELEVATION = 48.68
N 71158 E 2258136
L STATION 122·28 420 RIGHT
-R/R SPIKE IN A 12IN PINE
****
****
BM208 ELEVATION = 56.54
N 72969 E 2258553
L STATION 140·10 199 LEFT
-R/R SPIKE IN A 14IN PINE
****
****
BM209 ELEVATION = 58.64
N 75639 E 2259092
L STATION 166·40 293 LEFT
-R/R SPIKE IN A 6IN PINE
****
****
BM210 ELEVATION = 60.17
N 76940 E 2261064
L STATION 189·46 246 LEFT
-R/R SPIKE IN A 12IN PINE
****
****
BM211 ELEVATION = 55.79
N 77905 E 2262583
L STATION 206·75 307 RIGHT
-R/R SPIKE IN A 8IN PINE
****
****
BM212 ELEVATION = 55.52
N 80408 E 2262706
L STATION 231·41 387 LEFT
-R/R SPIKE IN A 10IN PINE
****
****

BM213 ELEVATION = 44.33
N 81975 E 2263288
Y7 STATION 15·24 93 RIGHT
-R/R SPIKE IN A 12IN PINE
****

04-JAN-2007 10:11
$$$$USERNAME$$$$ $$$$DGNPATH$$$$ r2245_ls_le_050311.dgn

PROJECT REFERENCE NO.	SHEET NO.
R-2245	1-F
Location and Surveys	

SURVEY CONTROL SHEET R-2245

GPS CALIBRATION REPORT

PROJECT : R2245C

TIP NUMBER	R-2245		
USER NAME	JNEAL	DATE & TIME	10:22:54 AM 7/12/2006
COORDINATE SYSTEM	US STATE PLANE 1983	ZONE	NORTH CAROLINA 3200
HORIZONTAL DATUM	CALIBRATION		
VERTICAL DATUM	NVGD 29	GEOID MODEL	GEOID99 (CONUS)
COORDINATE UNITS	US SURVEY FEET		
DISTANCE UNITS	US SURVEY FEET		
HEIGHT UNITS	US SURVEY FEET		

LOCAL SITE INFORMATION

LOCALIZED AROUND	R2245-A7
LATITUDE	33°55'43.12505"N
LONGITUDE	78°09'33.47364"W
SITE SCALE FACTOR	N/A
HEIGHT	38.2719SFT

THE NORTH CAROLINA DEPARTMENT OF TRANSPORTATION USES A LOCALIZED COORDINATE SYSTEM WHICH IS VERY SIMILAR TO NORTH CAROLINA ZONE 3200 FROM WHICH IT IS DERIVED.
PLEASE TAKE CARE IN UTILIZING THESE COORDINATES TO ELIMINATE CONFUSION OF THE TWO SYSTEMS.
THIS FILE IS TO AID IN THE USE OF REAL TIME KINEMATIC (RTK) GPS DURING CONSTRUCTION LAYOUT.

DATUM TRANSFORMATION PARAMETERS

DATUM TRANSFORMATION COMPUTATION NOT REQUESTED

UPDATED DEFAULT PROJECTION (TRANSVERSE MERCATOR) DEFINITION

UPDATED DEFAULT PROJECTION NOT REQUESTED

HORIZONTAL ADJUSTMENT PARAMETERS

NORTHING COORDINATE OF ROTATION CENTER	75325.2296SFT
EASTING COORDINATE OF ROTATION CENTER	2258713.6073SFT
ROTATION ABOUT THE CENTER POINT	0°00'01"
TRANSLATION NORTH	-0.0001SFT
TRANSLATION EAST	0.0000SFT
SCALE FACTOR	0.99987285

VERTICAL ADJUSTMENT PARAMETERS

NORTHING COORDINATE OF ORIGIN POINT	92714.3020SFT
EASTING COORDINATE OF ORIGIN POINT	2258413.8734SFT
VERTICAL SEPARATION AT ORIGIN	-0.0376SFT
SLOPE NORTH	-5.823PPM
SLOPE EAST	7.449PPM

GEOID MODEL DEFINITION

GEOID99 (CONUS)

RESIDUAL DIFFERENCES BETWEEN GPS (WGS84) AND LOCAL COORDINATES

SUMMARY

	MAXIMUM ERROR	ROOT MEAN SQUARE ERROR	POINT
HORIZONTAL	0.0438SFT	0.007	SOUTHPORT W WGS
VERTICAL	0.0558SFT	0.009	ROAD WGS84
THREE-DIMENSIONAL	0.0662SFT	0.012	SOUTHPORT W WGS

POINT RESIDUALS

WGS84 COORDINATES	CALCULATED POINT FOR DISPLAY ONLY	LOCAL COORDINATES
POINT LEROY WGS84	NORTHING 92714.3020SFT	POINT LEROY LOCAL
LATITUDE 34°00'06.09572"N	EASTING 2258413.8734SFT	NORTHING 92714.2870SFT
LONGITUDE 78°08'50.96846"W	ELEVATION 35.4939SFT	EASTING 2258413.8550SFT
HEIGHT -84.6455SFT	HORZ ERROR 0.0237SFT	ELEVATION 35.4930SFT
	VERT ERROR 0.0009SFT	UTILIZED HORZ AND VERT
	3D ERROR 0.0238SFT	QUALITY SURVEY QUALITY
POINT SOUTHPORT W WGS	NORTHING 83832.7962SFT	POINT SOUTHPORT WESTBA
LATITUDE 33°58'38.37544"N	EASTING 2256791.2970SFT	NORTHING 83832.7610SFT
LONGITUDE 78°09'11.13988"W	ELEVATION 48.7447SFT	EASTING 2256791.3230SFT
HEIGHT -71.4598SFT	HORZ ERROR 0.0438SFT	ELEVATION 48.6950SFT
	VERT ERROR 0.0497SFT	UTILIZED HORZ AND VERT
	3D ERROR 0.0662SFT	QUALITY SURVEY QUALITY
POINT R2245-18 WGS84	NORTHING 83759.6077SFT	POINT R2245-18 LOCAL
LATITUDE 33°58'37.06730"N	EASTING 2263626.1121SFT	NORTHING 83759.6150SFT
LONGITUDE 78°07'49.99173"W	ELEVATION 43.3792SFT	EASTING 2263626.1170SFT
HEIGHT -77.1488SFT	HORZ ERROR 0.0088SFT	ELEVATION 43.3960SFT
	VERT ERROR 0.0168SFT	UTILIZED HORZ AND VERT
	3D ERROR 0.0190SFT	QUALITY SURVEY QUALITY
POINT R2245-17 WGS84	NORTHING 82601.6660SFT	POINT R2245-17 LOCAL
LATITUDE 33°58'25.61064"N	EASTING 2263650.7089SFT	NORTHING 82601.6790SFT
LONGITUDE 78°07'49.82003"W	ELEVATION 44.7335SFT	EASTING 2263650.7130SFT
HEIGHT -75.8168SFT	HORZ ERROR 0.0136SFT	ELEVATION 44.7480SFT
	VERT ERROR 0.0149SFT	UTILIZED HORZ AND VERT
	3D ERROR 0.0199SFT	QUALITY SURVEY QUALITY
POINT ROAD WGS84	NORTHING 80009.8349SFT	POINT ROAD LOCAL
LATITUDE 33°57'59.38921"N	EASTING 2270521.5861SFT	NORTHING 80009.9800SFT
LONGITUDE 78°06'28.51613"W	ELEVATION 52.5428SFT	EASTING 2270521.5490SFT
HEIGHT -68.3857SFT	HORZ ERROR ?	ELEVATION 52.4870SFT
	VERT ERROR 0.0558SFT	UTILIZED VERTICAL
	3D ERROR 0.0558SFT	QUALITY SURVEY QUALITY
POINT R2245-15 WGS84	NORTHING 76843.7966SFT	POINT R2245-15 LOCAL
LATITUDE 33°57'28.84703"N	EASTING 2261400.7689SFT	NORTHING 76843.8060SFT
LONGITUDE 78°08'17.12765"W	ELEVATION 59.3047SFT	EASTING 2261400.7820SFT
HEIGHT -61.2499SFT	HORZ ERROR 0.0162SFT	ELEVATION 59.3380SFT
	VERT ERROR 0.0333SFT	UTILIZED HORZ AND VERT
	3D ERROR 0.0370SFT	QUALITY SURVEY QUALITY
POINT R2245-16 WGS84	NORTHING 76466.9356SFT	POINT R2245-16 LOCAL
LATITUDE 33°57'25.02507"N	EASTING 2262493.6805SFT	NORTHING 76466.9610SFT
LONGITUDE 78°08'04.19256"W	ELEVATION 60.5794SFT	EASTING 2262493.6860SFT
HEIGHT -60.0360SFT	HORZ ERROR 0.0260SFT	ELEVATION 60.6070SFT
	VERT ERROR 0.0276SFT	UTILIZED HORZ AND VERT
	3D ERROR 0.0379SFT	QUALITY SURVEY QUALITY
POINT R2245-14 WGS84	NORTHING 72897.2049SFT	POINT R2245-14 LOCAL
LATITUDE 33°56'50.03337"N	EASTING 2258749.0525SFT	NORTHING 72897.2110SFT
LONGITUDE 78°08'49.00086"W	ELEVATION 56.9993SFT	EASTING 2258749.0590SFT
HEIGHT -63.5038SFT	HORZ ERROR 0.0089SFT	ELEVATION 57.0410SFT
	VERT ERROR 0.0417SFT	UTILIZED HORZ AND VERT
	3D ERROR 0.0426SFT	QUALITY SURVEY QUALITY
POINT R2245-13 WGS84	NORTHING 72074.8606SFT	POINT R2245-13 LOCAL
LATITUDE 33°56'41.94814"N	EASTING 2258165.9709SFT	NORTHING 72074.8720SFT
LONGITUDE 78°08'56.01343"W	ELEVATION 53.8011SFT	EASTING 2258165.9670SFT
HEIGHT -66.6895SFT	HORZ ERROR 0.0121SFT	ELEVATION 53.8290SFT
	VERT ERROR 0.0279SFT	UTILIZED HORZ AND VERT
	3D ERROR 0.0304SFT	QUALITY SURVEY QUALITY
POINT R2245-A7 WGS84	NORTHING 66102.0411SFT	POINT R2245-A7 LOCAL
LATITUDE 33°55'43.12613"N	EASTING 2255060.6231SFT	NORTHING 66102.0500SFT
LONGITUDE 78°09'33.47165"W	ELEVATION 38.2758SFT	EASTING 2255060.5920SFT
HEIGHT -82.1783SFT	HORZ ERROR 0.0323SFT	ELEVATION 38.2620SFT
	VERT ERROR 0.0138SFT	UTILIZED HORZ AND VERT
	3D ERROR 0.0351SFT	QUALITY SURVEY QUALITY
POINT R2245-A5 WGS84	NORTHING 65304.1841SFT	POINT R2245-A5 LOCAL
LATITUDE 33°55'35.24066"N	EASTING 2254977.2053SFT	NORTHING 65304.1990SFT
LONGITUDE 78°09'34.54167"W	ELEVATION 21.6337SFT	EASTING 2254977.2150SFT
HEIGHT -98.8318SFT	HORZ ERROR 0.0178SFT	ELEVATION 21.6470SFT
	VERT ERROR 0.0133SFT	UTILIZED HORZ AND VERT
	3D ERROR 0.0222SFT	QUALITY SURVEY QUALITY
POINT R2245-A8 WGS84	NORTHING 66036.6175SFT	POINT R2245-A8 LOCAL
LATITUDE 33°55'42.43365"N	EASTING 2255601.1673SFT	NORTHING 66036.6070SFT
LONGITUDE 78°09'27.06364"W	ELEVATION 36.9395SFT	EASTING 2255601.1570SFT
HEIGHT -83.5431SFT	HORZ ERROR 0.0147SFT	ELEVATION 36.9430SFT
	VERT ERROR 0.0035SFT	UTILIZED HORZ AND VERT
	3D ERROR 0.0151SFT	QUALITY SURVEY QUALITY
POINT R2245-A6 WGS84	NORTHING 65268.7418SFT	POINT R2245-A6 LOCAL
LATITUDE 33°55'34.83512"N	EASTING 2255632.8281SFT	NORTHING 65268.7060SFT
LONGITUDE 78°09'26.76522"W	ELEVATION 23.8133SFT	EASTING 2255632.8220SFT
HEIGHT -96.6862SFT	HORZ ERROR 0.0363SFT	ELEVATION 23.7640SFT
	VERT ERROR 0.0493SFT	UTILIZED HORZ AND VERT
	3D ERROR 0.0613SFT	QUALITY SURVEY QUALITY
POINT WALTER WGS84	NORTHING 63912.3083SFT	POINT WALTER LOCAL
LATITUDE 33°55'21.94687"N	EASTING 2249240.2459SFT	NORTHING 63912.4150SFT
LONGITUDE 78°10'42.75662"W	ELEVATION 15.7642SFT	EASTING 2249240.1730SFT
HEIGHT -104.4322SFT	HORZ ERROR ?	ELEVATION 15.7550SFT
	VERT ERROR 0.0092SFT	UTILIZED VERTICAL
	3D ERROR 0.0092SFT	QUALITY SURVEY QUALITY

DATUM DESCRIPTION

THE LOCALIZED COORDINATE SYSTEM DEVELOPED FOR THIS PROJECT IS BASED ON THE STATE PLANE COORDINATES ESTABLISHED BY NCDOT FOR MONUMENT "R2245A-7"
WITH NAD 83 STATE PLANE GRID COORDINATES OF NORTHING: 66,102.0500(ft) EASTING: 2,255,060.5920(ft)
THE AVERAGE COMBINED GRID FACTOR USED ON THIS PROJECT (GROUND TO GRID) IS: 1.000142380
THE N.C. LAMBERT GRID BEARING AND LOCALIZED HORIZONTAL GROUND DISTANCE FROM "R2245A-7" TO -L- STATION IS
S 5° 33' 22.7" W 5,177.4734 ft
ALL LINEAR DIMENSIONS ARE LOCALIZED HORIZONTAL DISTANCES
VERTICAL DATUM USED IS NGVD 29

NOTES:

1. THE SITE CALIBRATION SHOWN IS BASED UPON A NETWORK TIED TO THE HARN (HIGH ACCURACY REFERENCE NETWORK) NAD 8395 ADJUSTMENT. THIS CALIBRATION WILL ALLOW THE END USER TO WORKWITHIN THE SAME COORDINATE SYSTEM WHEN USING RTK (REAL TIME KINEMATIC) GPS AND A LOCAL BASE STATION. IF ANOTHER SYSTEM SUCH AS VRS (VIRTUAL REFERENCE STATION) IS USED, ADDITIONAL FIELD TIES MAY BE NEEDED TO REDUCE POSSIBLE ERRORS, OR BIASES.

2. THE CONTROL DATA FOR THIS PROJECT CAN BE FOUND ELECTRONICALLY BY SELECTING PROJECT CONTROL DATA AT:
HTTP://WWW.DOH.DOT.STATE.NC.US/PRECONSTRUCT/HIGHWAY/LOCATION/PROJECT/

THE FILES TO BE FOUND ARE AS FOLLOWS:
R2245_LS_GPSCALIB_060810.HTML
R2245_LS_WGS84_060810.TXT
R2245_LS_LOCAL_060810.TXT
R2245_LS_CONTROL_050311.TXT

THE WGS84 AND LOCAL FILES ARE COMMA DELIMITED AND CAN BE USED TO REPRODUCE THE SITE CALIBRATION FOR THE END USER'S GPS EQUIPMENT. IF FURTHER INFORMATION IS NEEDED, PLEASE CONTACT THE LOCATION AND SURVEYS UNIT.

◎ INDICATES GEODETIC CONTROL MONUMENTS USED OR SET FOR HORIZONTAL PROJECT CONTROL BY THE NCDOT LOCATION AND SURVEYS UNIT.
PROJECT CONTROL ESTABLISHED USING GLOBAL POSITIONING SYSTEM.
NETWORK ESTABLISHED FROM EXISTING HARN MONUMENTATION
SEE GPS CALIBRATION SHEET FOR HORIZONTAL AND VERTICAL COORDINATE VALUES.

NOTE: DRAWING NOT TO SCALE

PROJECT REFERENCE NO.	SHEET NO.
R-2245	1-G
R/W SHEET NO.	

CENTERLINE COORDINATE SHEET

-L-COORDINATES

STATION	NORTHING	EASTING	STATION	NORTHING	EASTING	STATION	NORTHING	EASTING
63+00.00	66208.1264	2255162.3009	125+00.00	71634.2728	2257981.4319	187+00.00	76600.1312	2261004.3642
64+00.00	66306.5363	2255180.0627	126+00.00	71712.9100	2258043.2071	188+00.00	76655.5484	2261087.6045
65+00.00	66404.9463	2255197.8244	127+00.00	71791.5473	2258104.9823	189+00.00	76710.9655	2261170.8447
66+00.00	66503.3562	2255215.5861	128+00.00	71870.1846	2258166.7576	190+00.00	76766.3827	2261254.0849
67+00.00	66601.7643	2255233.3585	129+00.00	71948.8219	2258228.5328	191+00.00	76821.7999	2261337.3252
68+00.00	66700.0288	2255251.9011	130+00.00	72027.4591	2258290.3080	192+00.00	76877.2170	2261420.5654
69+00.00	66797.7299	2255273.1906	131+00.00	72106.7043	2258351.2943	193+00.00	76932.6700	2261503.7817
70+00.00	66894.2517	2255299.2775	132+00.00	72188.2228	2258409.2029	194+00.00	76990.7155	2261585.1977
71+00.00	66988.7204	2255332.0004	133+00.00	72271.9918	2258463.8053	195+00.00	77052.8173	2261663.5637
72+00.00	67080.3982	2255371.8783	134+00.00	72357.8773	2258515.0141	196+00.00	77118.8154	2261738.6776
73+00.00	67168.7404	2255418.6834	135+00.00	72445.7419	2258562.7474	197+00.00	77188.5397	2261810.3462
74+00.00	67253.3066	2255472.0156	136+00.00	72535.4451	2258606.9290	198+00.00	77261.8106	2261878.3846
75+00.00	67334.4782	2255530.4027	137+00.00	72626.8433	2258647.4880	199+00.00	77338.4394	2261942.6176
76+00.00	67413.2801	2255591.9621	138+00.00	72719.7903	2258684.3596	200+00.00	77418.2286	2262002.8798
77+00.00	67490.9485	2255654.9507	139+00.00	72814.1375	2258717.4849	201+00.00	77500.9728	2262059.0159
78+00.00	67568.4808	2255718.1073	140+00.00	72909.7338	2258746.8107	202+00.00	77586.4587	2262110.8812
79+00.00	67647.0956	2255779.9044	141+00.00	73006.4264	2258772.2903	203+00.00	77674.4661	2262158.3422
80+00.00	67727.6030	2255839.2151	142+00.00	73104.0606	2258793.8828	204+00.00	77764.7683	2262201.2767
81+00.00	67809.9242	2255895.9813	143+00.00	73202.4801	2258811.5537	205+00.00	77857.1144	2262239.6205
82+00.00	67893.9788	2255950.1477	144+00.00	73301.5276	2258825.2748	206+00.00	77950.1726	2262276.2290
83+00.00	67979.6849	2256001.6614	145+00.00	73401.0445	2258835.0240	207+00.00	78043.2307	2262312.8376
84+00.00	68066.9586	2256050.4721	146+00.00	73500.7835	2258842.2440	208+00.00	7813 6.2888	2262349.4461
85+00.00	68155.7148	2256096.5321	147+00.00	73600.5255	2258849.4219	209+00.00	78229.3469	2262386.0547
86+00.00	68245.8668	2256139.7964	148+00.00	73700.2676	2258856.5997	210+00.00	78322.4051	2262422.6632
87+00.00	68337.3266	2256180.2228	149+00.00	73800.0096	2258863.7775	211+00.00	7841 5.4632	2262459.2717
88+00.00	68430.0049	2256217.7718	150+00.00	73899.7517	2258870.9554	212+00.00	78508.5213	2262495.8803
89+00.00	68523.8111	2256252.4067	151+00.00	73999.4938	2258878.1332	213+00.00	7860 1.5794	2262532.4888
90+00.00	6861 8.6415	2256284.1317	152+00.00	74099.2358	2258885.3111	214+00.00	78694.6376	2262569.0974
91+00.00	6871 3.8197	2256314.8093	153+00.00	7418 98.9779	2258892.4889	215+00.00	78787.6957	2262605.7059
92+00.00	68808.9979	2256345.4869	154+00.00	74298.7199	2258899.6668	216+00.00	78880.7538	2262642.3145
93+00.00	68904.1760	2256376.1645	155+00.00	74398.4620	2258906.8446	217+00.00	78973.8119	2262678.9230
94+00.00	68999.3542	2256406.8422	156+00.00	74498.1903	2258914.2086	218+00.00	79066.8701	2262715.5316
95+00.00	69094.5324	2256437.5198	157+00.00	74597.7753	2258923.2740	219+00.00	7911 59.9282	2262752.1401
96+00.00	6911 89.7105	2256468.1974	158+00.00	74696.9362	2258936.1249	220+00.00	79252.9863	2262788.7487
97+00.00	69284.8887	2256498.8750	159+00.00	74795.1547	2258954.8090	221+00.00	79346.0444	2262825.3572
98+00.00	69380.0669	2256529.5526	160+00.00	7489 1.7186	2258980.7056	222+00.00	79439.1026	2262861.9657
99+00.00	69475.0716	2256560.7580	161+00.00	74986.0455	2259013.8363	223+00.00	79532.1978	2262898.4792
100+00.00	69569.2850	2256594.2735	162+00.00	75077.5944	2259054.0111	224+00.00	79626.1589	2262932.6892
101+00.00	69662.5961	2256630.2245	163+00.00	7515 65.8401	2259100.9996	225+00.00	79721.2435	2262963.6394
102+00.00	69754.9420	2256668.5867	164+00.00	75250.2764	2259154.5322	226+00.00	7981 7.3387	2262991.2931
103+00.00	69846.2605	2256709.3343	165+00.00	75330.4188	2259214.3018	227+00.00	7991 4.3301	2263015.6175
104+00.00	69936.4900	2256752.4399	166+00.00	75405.8077	2259279.9656	228+00.00	8001 2.1025	2263036.5834
105+00.00	70025.5695	2256797.8742	167+00.00	75476.0106	2259351.1469	229+00.00	8011 0.5374	2263054.1792
106+00.00	7011 3.4390	2256845.6067	168+00.00	75540.7527	2259427.3335	230+00.00	80209.2195	2263070.3610
107+00.00	70200.0391	2256895.6052	169+00.00	75600.8671	2259507.2351	231+00.00	80307.9016	2263086.5427
108+00.00	70285.3116	2256947.8359	170+00.00	75657.8772	2259589.3886	232+00.00	80406.5836	2263102.7245
109+00.00	70369.1988	2257002.2636	171+00.00	7571 3.4567	2259672.5203	233+00.00	80505.2657	2263118.9063
110+00.00	7045 1.6441	2257058.8516	172+00.00	75768.8739	2259755.7605	234+00.00	80603.9265	2263135.2147
111+00.00	70532.5920	2257111.7561	173+00.00	75824.2910	2259839.0008	235+00.00	80702.0022	2263154.6941
112+00.00	7061 1.9882	2257178.3538	174+00.00	75879.7082	2259922.2410	236+00.00	80799.0914	2263178.6099
113+00.00	70690.6255	2257240.1291	175+00.00	75935.1253	2260005.4812	237+00.00	80894.9936	2263206.9125
114+00.00	70769.2628	2257301.9043	176+00.00	75990.5425	2260088.7215	238+00.00	80989.5108	2263239.5436
115+00.00	70847.9000	2257363.6795	177+00.00	76045.9596	2260171.9617	239+00.00	81082.4475	2263276.4358
116+00.00	70926.5373	2257425.4548	178+00.00	7611 0.3768	2260255.2020	240+00.00	8113 73.6120	2263317.5128
117+00.00	71005.1746	2257487.2300	179+00.00	7611 56.7940	2260338.4422	241+00.00	81263.0327	2263362.2708
118+00.00	71083.8119	2257549.0052	180+00.00	7621 2.2111	2260421.6825	242+00.00	81352.1528	2263407.6317
119+00.00	7111 62.4491	2257610.7805	181+00.00	76267.6283	2260504.9227	243+00.00	81441.2729	2263452.9926
120+00.00	71241.0864	2257672.5557	182+00.00	76323.0454	2260588.1630	244+00.00	81530.8363	2263497.4579
121+00.00	71319.7237	2257734.3309	183+00.00	76378.4626	2260671.4032	245+00.00	81622.5482	2263537.2870
122+00.00	71398.3610	2257796.1062	184+00.00	76433.8798	2260754.6435	246+00.00	8171 6.3302	2263571.9623
123+00.00	71476.9982	2257857.8814	185+00.00	76489.2969	2260837.8837	247+00.00	8181 1.8929	2263601.3766
124+00.00	71555.6355	2257919.6566	186+00.00	76544.7141	2260921.1240	248+00.00	81908.9414	2263625.4392

PROJECT REFERENCE NO.	SHEET NO.
R-2245	2
ROADWAY DESIGN ENGINEER	PAVEMENT DESIGN ENGINEER

NORTH CAROLINA PROFESSIONAL SEAL 22924 ENGINEER GLENN W. MUNFORD 1/17/07

NORTH CAROLINA PROFESSIONAL SEAL 031484 ENGINEER VLADIMIR G. MITCHEV 01/22/07

PAVEMENT SCHEDULE

C1	PROP. APPROX. 1.5" ASPHALT CONCRETE SURFACE COURSE, TYPE S9.5B, AT AN AVERAGE RATE OF 168 LBS. PER SQ. YD.
C2	PROP. APPROX. 3" ASPHALT CONCRETE SURFACE COURSE, TYPE S9.5B, AT AN AVERAGE RATE OF 168 LBS. PER SQ. YD. IN EACH OF TWO LAYERS.
C3	PROP. VAR. DEPTH ASPHALT CONCRETE SURFACE COURSE, TYPE S9.5B, AT AN AVERAGE RATE OF 112 LBS. PER SQ. YD. PER 1" DEPTH. TO BE PLACED IN LAYERS NOT TO EXCEED 1.5" IN DEPTH.
C4	PROP. APPROX. 3" ASPHALT CONCRETE SURFACE COURSE, TYPE S9.5C, AT AN AVERAGE RATE OF 168 LBS. PER SQ. YD. IN EACH OF TWO LAYERS.
C5	PROP. VAR. DEPTH ASPHALT CONCRETE SURFACE COURSE, TYPE S9.5C, AT AN AVERAGE RATE OF 112 LBS. PER SQ. YD. PER 1" DEPTH. TO BE PLACED IN LAYERS NOT TO EXCEED 1.5" IN DEPTH.
D1	PROP. APPROX. 2.5" ASPHALT CONCRETE INTERMEDIATE COURSE, TYPE I19.0B, AT AN AVERAGE RATE OF 285 LBS. PER SQ. YD.
D2	PROP. VAR. DEPTH ASPHALT CONCRETE INTERMEDIATE COURSE, TYPE I19.0B, AT AN AVERAGE RATE OF 114 LBS. PER SQ. YD. PER 1" DEPTH, TO BE PLACED IN LAYERS NOT LESS THAN 2.5" IN DEPTH OR GREATER THAN 4" IN DEPTH.
D3	PROP. APPROX. 2.5" ASPHALT CONCRETE INTERMEDIATE COURSE, TYPE I19.0C, AT AN AVERAGE RATE OF 285 LBS. PER SQ. YD.
D4	PROP. VAR. DEPTH ASPHALT CONCRETE INTERMEDIATE COURSE, TYPE I19.0C, AT AN AVERAGE RATE OF 114 LBS. PER SQ. YD. PER 1" DEPTH, TO BE PLACED IN LAYERS NOT LESS THAN 2.5" IN DEPTH OR GREATER THAN 4" IN DEPTH.
E1	PROP. APPROX. 4" ASPHALT CONCRETE BASE COURSE, TYPE B25.0B, AT AN AVERAGE RATE OF 456 LBS. PER SQ. YD.
E2	PROP. VAR. DEPTH ASPHALT CONCRETE BASE COURSE, TYPE B25.0B, AT AN AVERAGE RATE OF 114 LBS. PER SQ. YD. PER 1" DEPTH. TO BE PLACED IN LAYERS NOT LESS THAN 3" IN DEPTH OR GREATER THAN 5.5" IN DEPTH.
E3	PROP. APPROX. 4" ASPHALT CONCRETE BASE COURSE, TYPE B25.0C, AT AN AVERAGE RATE OF 456 LBS. PER SQ. YD.
E4	PROP. VAR. DEPTH ASPHALT CONCRETE BASE COURSE, TYPE B25.0C, AT AN AVERAGE RATE OF 114 LBS. PER SQ. YD. PER 1" DEPTH. TO BE PLACED IN LAYERS NOT LESS THAN 3" IN DEPTH OR GREATER THAN 5.5" IN DEPTH.
J	PROP. 8" AGGREGATE BASE COURSE.
R1	1'-6" CONCRETE CURB AND GUTTER.
R2	2'-6" CONCRETE CURB AND GUTTER.
R3	2'-9" CONCRETE CURB AND GUTTER.
R4	8" X 18" CONCRETE CURB.
S	4" CONCRETE SIDEWALK.
U	EXISTING PAVEMENT.
T	EARTH MATERIAL.
W1	VARIABLE DEPTH ASPHALT PAVEMENT (SEE DETAIL SHOWING METHOD OF WEDGING NO. 1)
W2	VARIABLE DEPTH ASPHALT PAVEMENT (SEE DETAIL SHOWING METHOD OF WEDGING NO. 2)
W3	VARIABLE DEPTH ASPHALT PAVEMENT (SEE DETAIL SHOWING METHOD OF WEDGING NO. 3)
W4	VARIABLE DEPTH ASPHALT PAVEMENT (SEE DETAIL SHOWING METHOD OF WEDGING NO. 4)

NOTE: PAVEMENT EDGE SLOPES ARE 1:1 UNLESS SHOWN OTHERWISE.

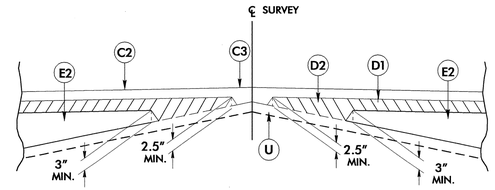

Detail Showing Method of Wedging No. 1

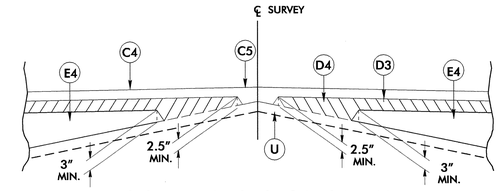

Detail Showing Method of Wedging No.2

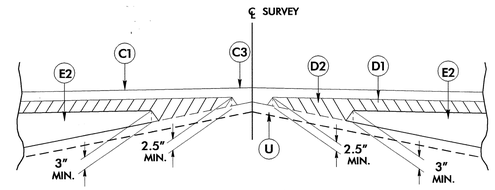

Detail Showing Method of Wedging No. 3

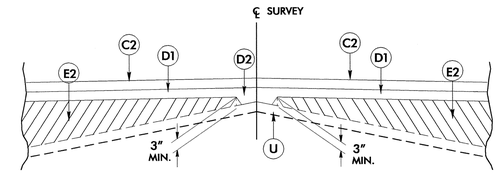

Detail Showing Method of Wedging No. 4

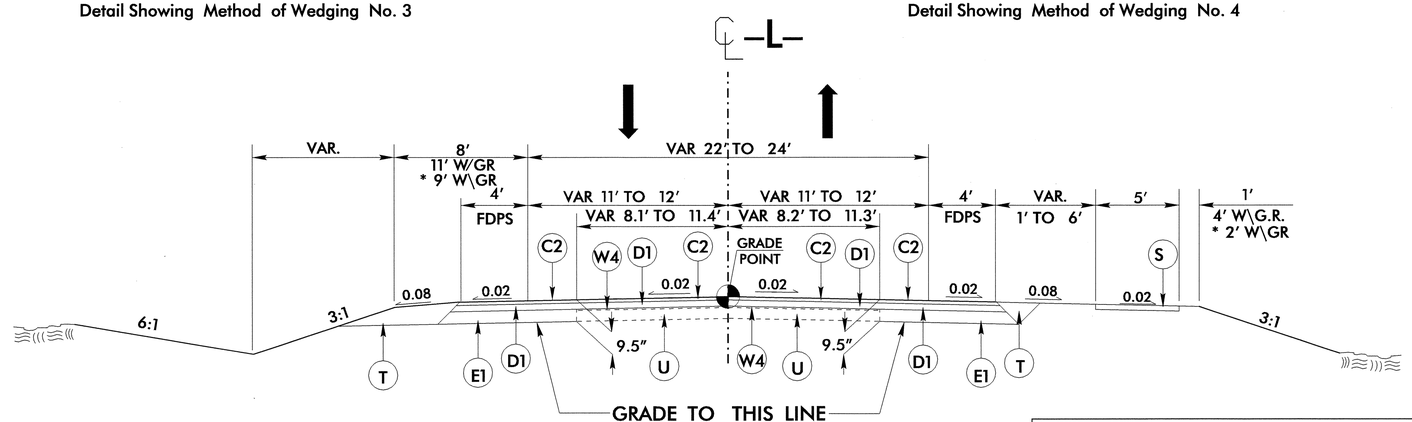

TYPICAL SECTION NO. 1

–L– STA. 10+12.45 TO STA. 15+75.00
* –L– STA. 15+75.00 TO STA. 16+00.00
* USE 1' BEHIND THE GUARDRAIL IN THESE LOCATIONS

NOTE: MILL EXISTING ASPHALT PAVEMENT 2.5"
–L– STA. 10+45.00 TO STA. 14+25.00

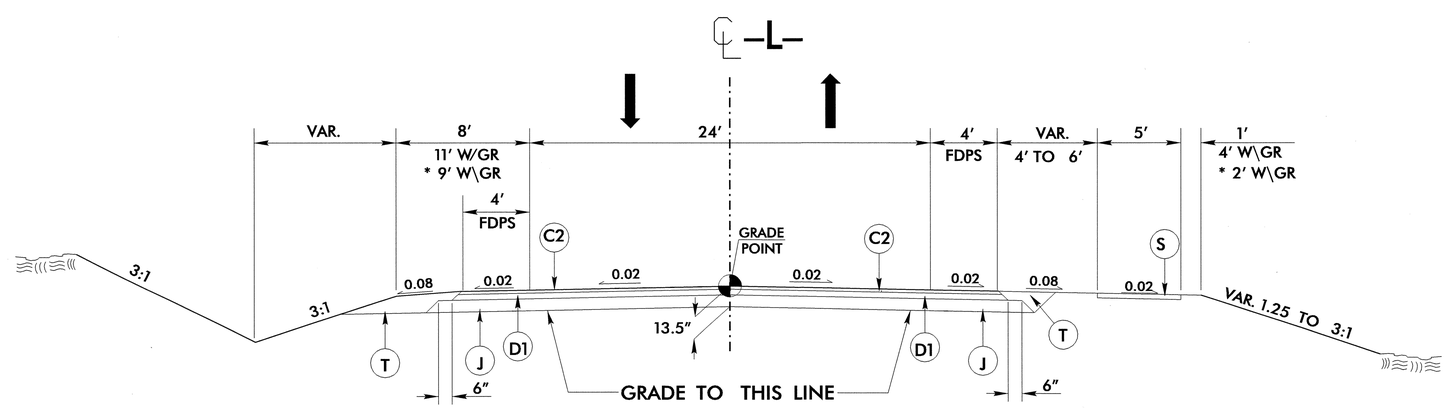

TYPICAL SECTION NO. 2

* –L– STA. 16+00.00 TO STA. 20+66.44 (BEGIN BRIDGE)
–L– STA. 22+33.56 (END BRIDGE) TO STA. 24+81.50

* USE 1' BEHIND THE GUARDRAIL IN THESE LOCATIONS

6/2/99
22-JAN-2007 10:09
r:\roadway\proj\r2245_rdy_typ.dgn
$$$$USERNAME$$$$

PROJECT REFERENCE NO.	SHEET NO.
R-2245	2-A
ROADWAY DESIGN ENGINEER	PAVEMENT DESIGN ENGINEER

NORTH CAROLINA PROFESSIONAL SEAL 22924 ENGINEER GLENN W. MUMFORD 1/17/07

NORTH CAROLINA PROFESSIONAL SEAL 031484 ENGINEER VLADIMIR G. MITCHEV 01/22/07

C1	1.5" S9.5B
C2	3" S9.5B
C3	VAR. S9.5B
C4	3" S9.5C
C5	VAR. S9.5C
D1	2.5" I19.0B
D2	VAR. I19.0B
D3	2.5" I19.0C
D4	VAR. I19.0C
E1	4" B25.0B
E2	VAR. B25.0B
E3	4" B25.0C
E4	VAR. B25.0C
J	8" ABC
R1	1'-6" C & G
R2	2'-6" C & G
R3	2'-9" C & G
R4	8" x 18" CONC. CURB
S	4" CONC SIDEWALK
U	EXISTING PAVEMENT
T	EARTH MATERIAL
W1	WEDGING DETAIL NO. 1
W2	WEDGING DETAIL NO. 2
W3	WEDGING DETAIL NO. 3
W4	WEDGING DETAIL NO. 4

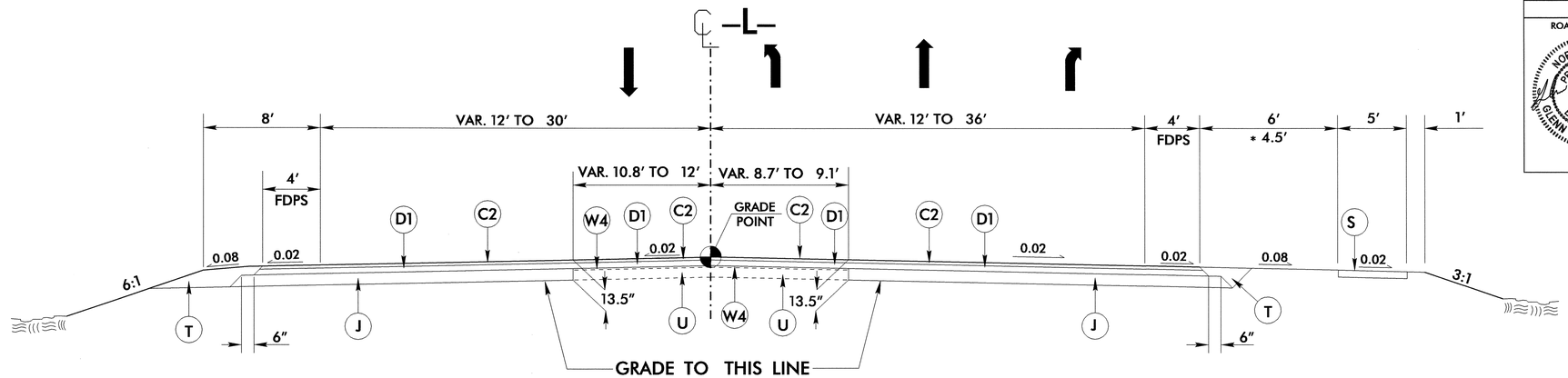

TYPICAL SECTION NO. 3

-L- STA. 24+81.50 TO STA. 32+00.00
* -L- STA. 29+20.00 TO STA. 30+92.82

NOTE: MILL EXISTING ASPHALT PAVEMENT 2.5"
-L- STA. 24+81.50 TO STA. 27+00.00

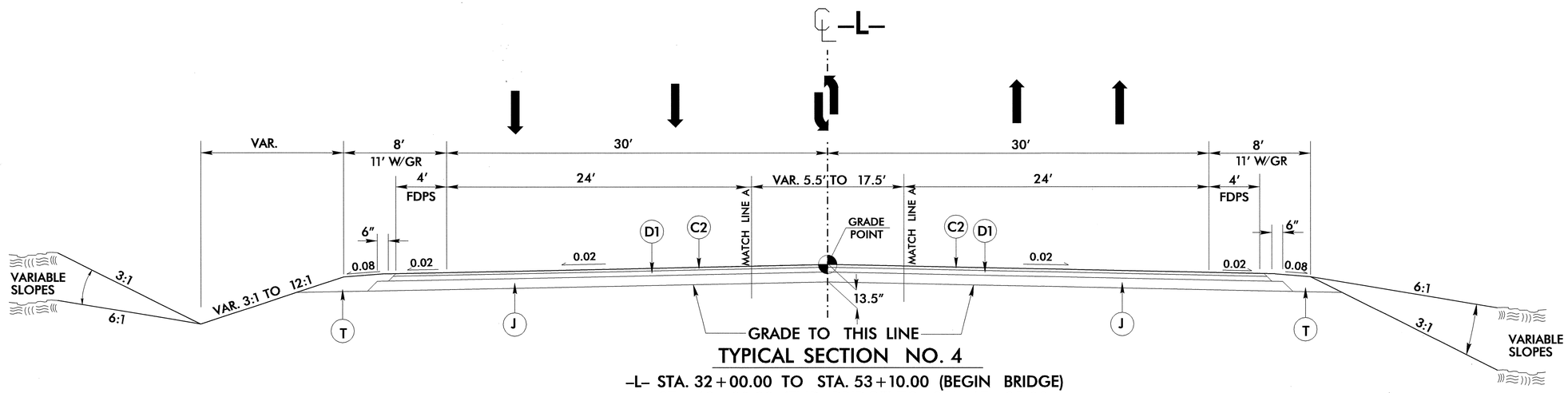

TYPICAL SECTION NO. 4

-L- STA. 32+00.00 TO STA. 53+10.00 (BEGIN BRIDGE)
-L- STA. 62+90.00 (END BRIDGE) TO STA. 67+35.00
-L- STA. 72+50.00 TO STA. 73+35.00
-L- STA. 192+15.00 TO STA. 193+10.00
-L- STA. 248+08.61 TO STA. 248+47.46

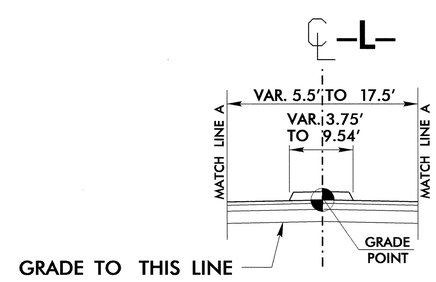

TYPICAL SECTION NO. 4A

USE TYPICAL SECTION NO. 4A IN CONJUNCTION WITH TYPICAL SECTION NO. 4 AT THE FOLLOWING LOCATION:
-L- STA. 52+00.00 TO STA. 67+35.00*

* 200' TRANSITION FROM TYPICAL SECTION NO. 4A TO TYPICAL SECTION NO. 5C

6/2/99
22-JAN-2007 10:09
r:\roadway\proj\r2245_rdy_typ.dgn
$$USERNAME$$

PROJECT REFERENCE NO.	SHEET NO.
R-2245	2-B
ROADWAY DESIGN ENGINEER	PAVEMENT DESIGN ENGINEER

NORTH CAROLINA PROFESSIONAL SEAL 22924 ENGINEER GLENN W. MUMFORD 1/17/07

NORTH CAROLINA PROFESSIONAL SEAL 031484 ENGINEER VLADIMIR G. MITCHEV 01/22/07

C1	1.5" S9.5B
C2	3" S9.5B
C3	VAR. S9.5B
C4	3" S9.5C
C5	VAR. S9.5C
D1	2.5" I19.0B
D2	VAR. I19.0B
D3	2.5" I19.0C
D4	VAR. I19.0C
E1	4" B25.0B
E2	VAR. B25.0B
E3	4" B25.0C
E4	VAR. B25.0C
J	8" ABC
R1	1'-6" C & G
R2	2'-6" C & G
R3	2'-9" C & G
R4	8" x 18" CONC. CURB
S	4" CONC SIDEWALK
U	EXISTING PAVEMENT
T	EARTH MATERIAL
W1	WEDGING DETAIL NO. 1
W2	WEDGING DETAIL NO. 2
W3	WEDGING DETAIL NO. 3
W4	WEDGING DETAIL NO. 4

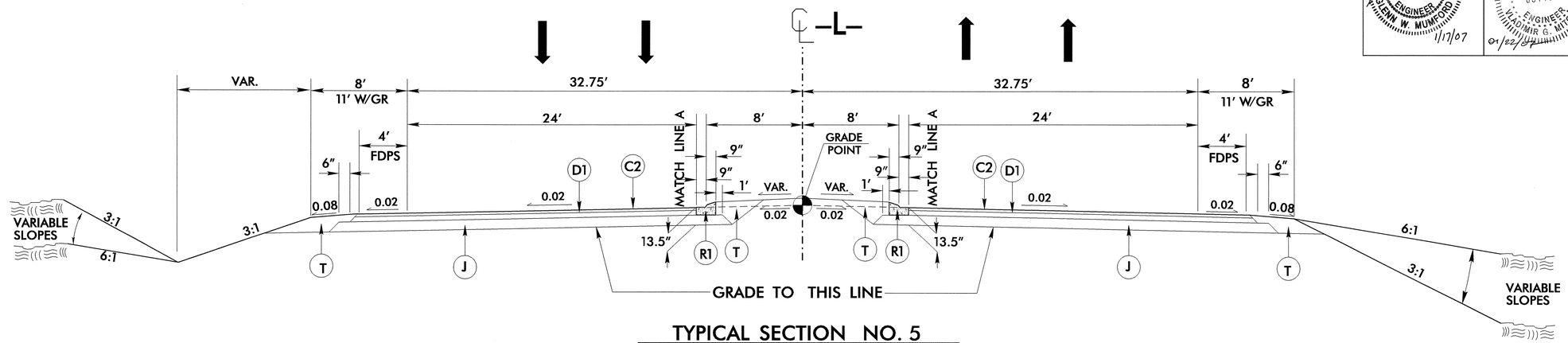

TYPICAL SECTION NO. 5

-L- STA. 67+35.00 TO STA. 72+50.00
-L- STA. 73+35.00 TO STA. 192+15.00
-L- STA. 193+10.00 TO STA. 248+08.61

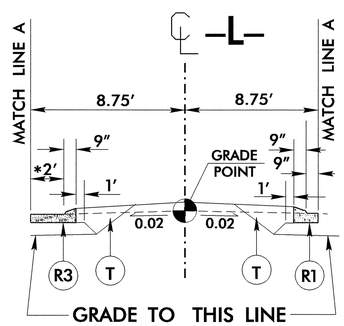

TYPICAL SECTION NO. 5A

USE TYPICAL SECTION NO. 5A IN CONJUNCTION WITH TYPICAL SECTION NO. 5 AT THE FOLLOWING LOCATIONS:
-L- STA. 97+84.60* TO STA. 112+47.79*
-L- STA. 154+68.97* TO STA. 171+32.27*
-L- STA. 233+26.23* TO STA. 241+04.44*

USE THE REVERSE OF TYPICAL SECTION NO. 5A IN CONJUNCTION WITH TYPICAL SECTION NO. 5 AT THE FOLLOWING LOCATIONS:

-L- STA. 77+94.22 TO STA. 90+34.04*
-L- STA. 129+79.43* TO STA. 145+64.53*
-L- STA. 198+00.00 TO STA. 205+35.97*
-L- STA. 222+25.67* TO STA. 229+41.24*

NOTE: SWITCH TO 2'-9" CURB AND GUTTER IN THE MEDIAN, ON THE HIGH SIDE OF SUPERELEVATION, THIS IS NOT REFLECTED IN THE CROSS SECTIONS.

* 50' TRANSITIION FROM 1' 6" CURB TO 2' 9" CURB BETWEEN TYPICAL SECTION NO.5 AND NO. 5A

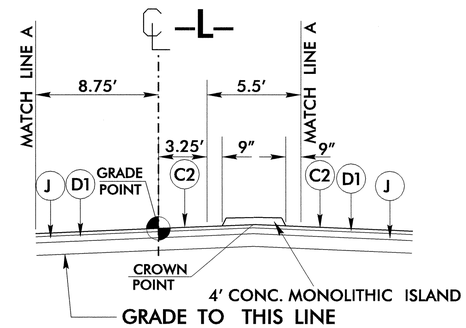

TYPICAL SECTION NO. 5B

USE TYPICAL SECTION NO. 5B IN CONJUNCTION WITH TYPICAL SECTION NO. 5 AT THE FOLLOWING LOCATION:
-L- STA. 73+35.00 TO STA. 77+94.22*

* 200' TRANSITION FROM TYPICAL SECTION NO. 5B TO TYPICAL SECTION NO. 5A

USE THE REVERSE OF TYPICAL SECTION NO. 5B IN CONJUNCTION WITH TYPICAL SECTION NO. 5 AT THE FOLLOWING LOCATIONS:

-L- STA. 185+00.00* TO STA. 192+15.00
-L- STA. 242+98.90* TO STA. 248+08.61

* 200' TRANSITION FROM TYPICAL SECTION NO. 5 TO TYPICAL SECTION NO. 5B

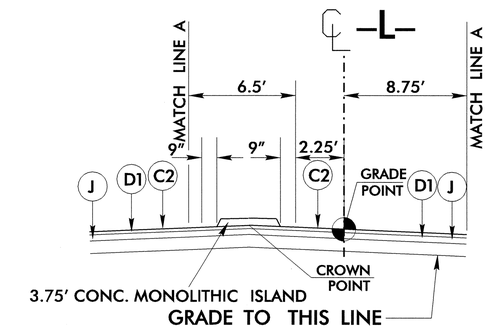

TYPICAL SECTION NO. 5C

USE TYPICAL SECTION NO. 5C IN CONJUNCTION WITH TYPICAL SECTION NO. 5 AT THE FOLLOWING LOCATION:
-L- STA. 67+35.00 TO STA. 72+50.00

USE THE REVERSE OF TYPICAL SECTION NO. 5C IN CONJUNCTION WITH TYPICAL SECTION NO. 5 AT THE FOLLOWING LOCATION:
-L- STA. 193+10.00 TO STA. 198+00.00*

* 200' TRANSITION FROM TYPICAL SECTION NO. 5C TO TYPICAL SECTION NO. 5A

6/2/99
23-JAN-2007 08:46
r:\roadway\proj\r2245_rdy_typ.dgn
$$$$USERNAME$$$$

PROJECT REFERENCE NO.	SHEET NO.
R-2245	2-C
ROADWAY DESIGN ENGINEER	PAVEMENT DESIGN ENGINEER

NORTH CAROLINA PROFESSIONAL SEAL 22924 ENGINEER GLENN W. MUMFORD 1/17/07

NORTH CAROLINA PROFESSIONAL SEAL 031484 ENGINEER VLADIMIR G. MITCHEV 01/22/07

C1	1.5" S9.5B
C2	3" S9.5B
C3	VAR. S9.5B
C4	3" S9.5C
C5	VAR. S9.5C
D1	2.5" I19.0B
D2	VAR. I19.0B
D3	2.5" I19.0C
D4	VAR. I19.0C
E1	4" B25.0B
E2	VAR. B25.0B
E3	4" B25.0C
E4	VAR. B25.0C
J	8" ABC
R1	1'-6" C & G
R2	2'-6" C & G
R3	2'-9" C & G
R4	8" x 18" CONC. CURB
S	4" CONC SIDEWALK
U	EXISTING PAVEMENT
T	EARTH MATERIAL
W1	WEDGING DETAIL NO. 1
W2	WEDGING DETAIL NO. 2
W3	WEDGING DETAIL NO. 3
W4	WEDGING DETAIL NO. 4

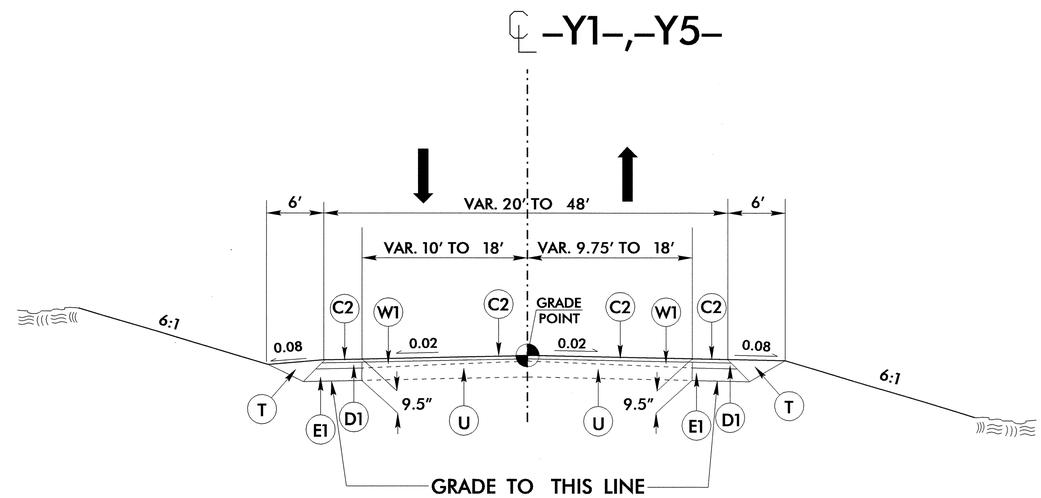

TYPICAL SECTION NO. 6

–Y1– STA. 10+00.00 TO STA. 13+00.00
–Y5– STA. 11+20.00 TO STA. 13+83.06
–Y5– STA. 14+49.46 TO STA. 17+21.27

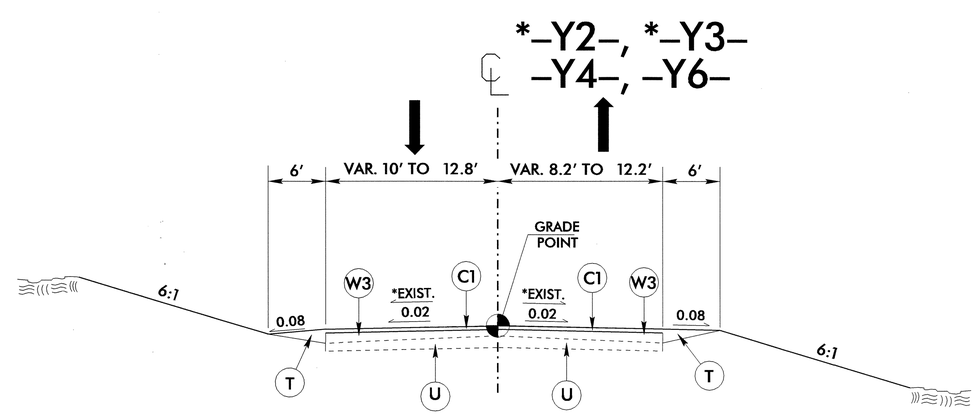

TYPICAL SECTION NO. 7

*–Y2– STA. 11+00.00 TO STA. 11+86.39
*–Y2– STA. 12+10.72 TO STA. 12+80.00
*–Y3– STA. 11+00.00 TO STA. 11+98.26
–Y4– STA. 10+50.00 TO STA. 11+63.54

–Y6– STA. 10+90.00 TO STA. 12+90.00
(OVERLAY WITH C1 ONLY)

6/2/99

22-JAN-2007 10:09
r:\roadway\proj\r2245_rdy_typ.dgn
$$$$USERNAME$$$$

PROJECT REFERENCE NO.	SHEET NO.
R-2245	2-D
ROADWAY DESIGN ENGINEER	PAVEMENT DESIGN ENGINEER

NORTH CAROLINA PROFESSIONAL SEAL 22924 ENGINEER GLENN W. MUMFORD 1/17/07

NORTH CAROLINA PROFESSIONAL SEAL 031484 ENGINEER VLADIMIR G. MITCHEV 01/22/07

C1	1.5" S9.5B
C2	3" S9.5B
C3	VAR. S9.5B
C4	3" S9.5C
C5	VAR. S9.5C
D1	2.5" I19.0B
D2	VAR. I19.0B
D3	2.5" I19.0C
D4	VAR. I19.0C
E1	4" B25.0B
E2	VAR. B25.0B
E3	4" B25.0C
E4	VAR. B25.0C
J	8" ABC
R1	1'-6" C & G
R2	2'-6" C & G
R3	2'-9" C & G
R4	8" x 18" CONC. CURB
S	4" CONC SIDEWALK
U	EXISTING PAVEMENT
T	EARTH MATERIAL
W1	WEDGING DETAIL NO. 1
W2	WEDGING DETAIL NO. 2
W3	WEDGING DETAIL NO. 3
W4	WEDGING DETAIL NO. 4

–Y7–, –Y8–, –Y8REV–

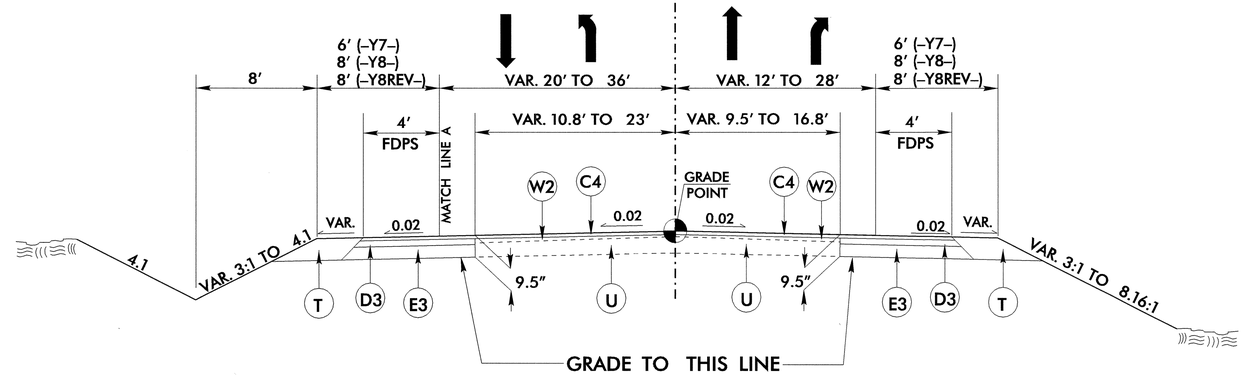

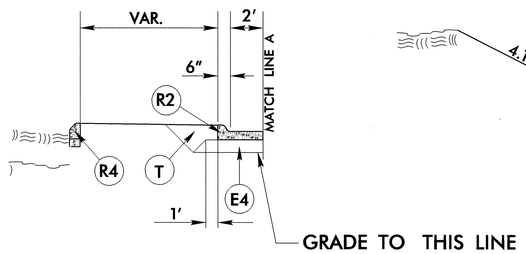

TYPICAL SECTION NO. 8

–Y7– STA. 10+00.00 TO STA. 28+00.00
–Y8– STA. 11+92.29 TO STA. 16+50.00
–Y8REV– STA. 10+24.08 TO STA. 11+89.61

TYPICAL SECTION NO. 8A

USE TYPICAL SECTION NO. 8A IN CONJUCNTION WITH TYPICAL SECTION NO. 8 AT THE FOLLOWING LOCATIONS:
–Y7– STA. 16+58.49 TO STA. 18+00.00 LT.
–Y8– STA. 10+09.97 TO STA. 11+67.83 LT.

–Y7DET–

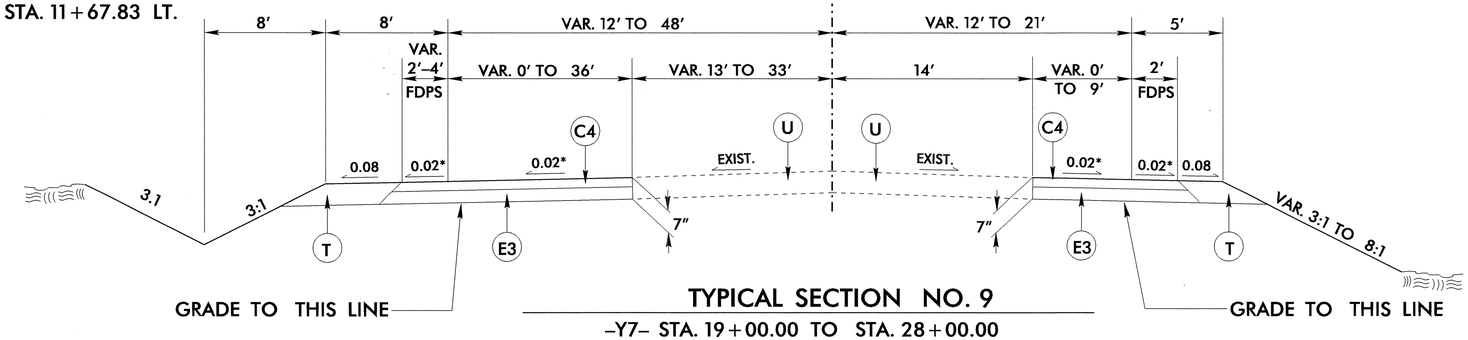

TYPICAL SECTION NO. 9

–Y7– STA. 19+00.00 TO STA. 28+00.00
USE TYPICAL SECTION NO. 9 FOR PROPOSED WIDENING FOR ON–SITE DETOUR ON –Y7– (SEE SHEET 2–F)
* MATCH EXISTING SUPER ELEVATION AT EXISTING EDGE OF PAVEMENT

–DRIVE–

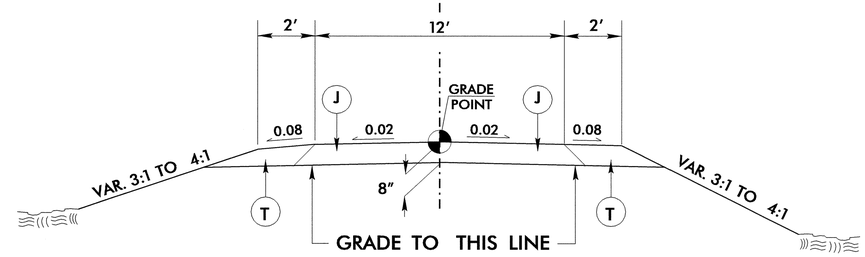

TYPICAL SECTION NO. 10

–DRIVE– STA. 10+39.95 TO STA. 12+00.00

6/2/99

22-JAN-2007 12:23
r:\roadway\proj\r-2245_rdy_typ.dgn
$$$$USERNAME$$$$

PROJECT REFERENCE NO.	SHEET NO.
R-2245	2-E

ROADWAY DESIGN ENGINEER

NORTH CAROLINA PROFESSIONAL SEAL 22924 ENGINEER GLENN W. MUMFORD

1/17/07

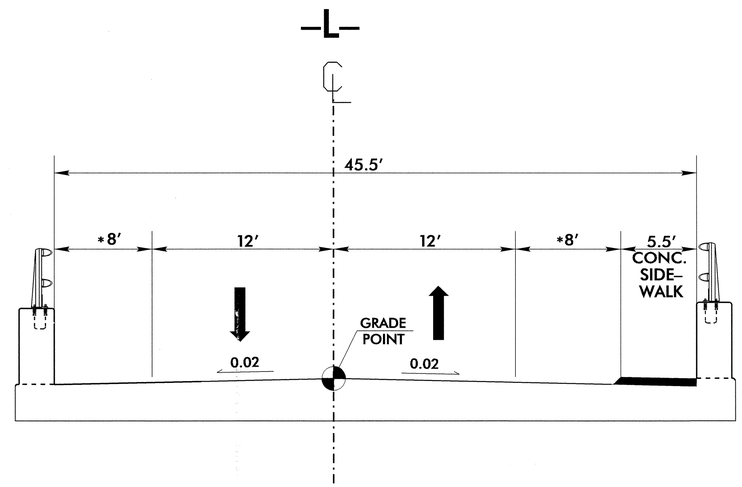

TYPICAL SECTION NO. 11
(DAVIS CANAL BRIDGE)

-L- STA. 20+66.44 TO STA. 22+33.56

* ADDITIONAL BRIDGE OFFSET WIDTH REQUIRED BY HYDRAULIC DESIGN

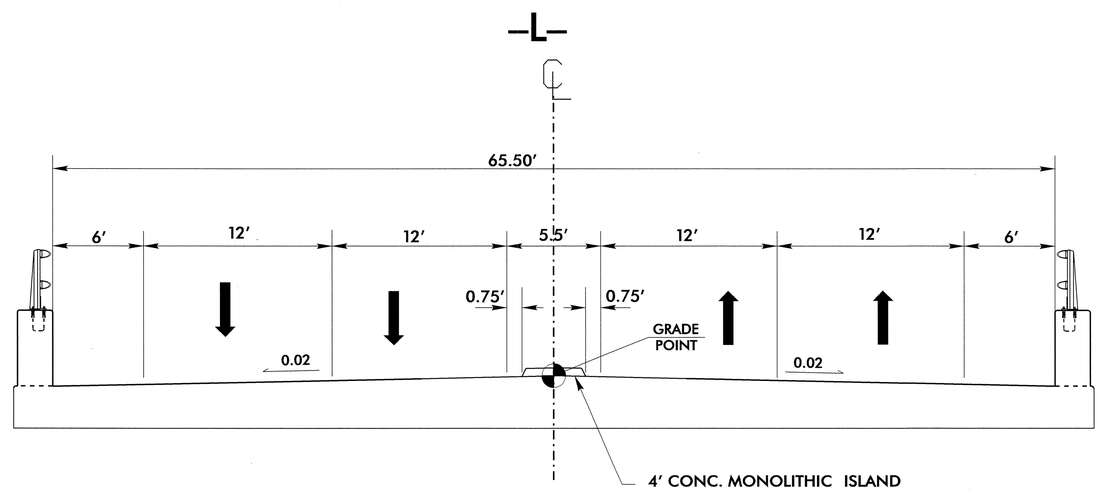

TYPICAL SECTION NO. 12
(INTRACOASTAL WATERWAY BRIDGE)

-L- STA. 53+10.00 TO STA. 62+90.00

6/2/99

12-JAN-2007 10:22
r:\roadway\proj\r2245_rdy_typ.dgn
$$$$USERNAME$$$$

PROJECT REFERENCE NO.	SHEET NO.
R-2245	2-F
R/W SHEET NO.	
ROADWAY DESIGN ENGINEER	HYDRAULICS ENGINEER

NORTH CAROLINA PROFESSIONAL SEAL 22824 ENGINEER GLENN W. MUMFORD 1/17/07

NORTH CAROLINA PROFESSIONAL SEAL 19775 ENGINEER RAY D. LOVINGGOOD 22 JAN '07

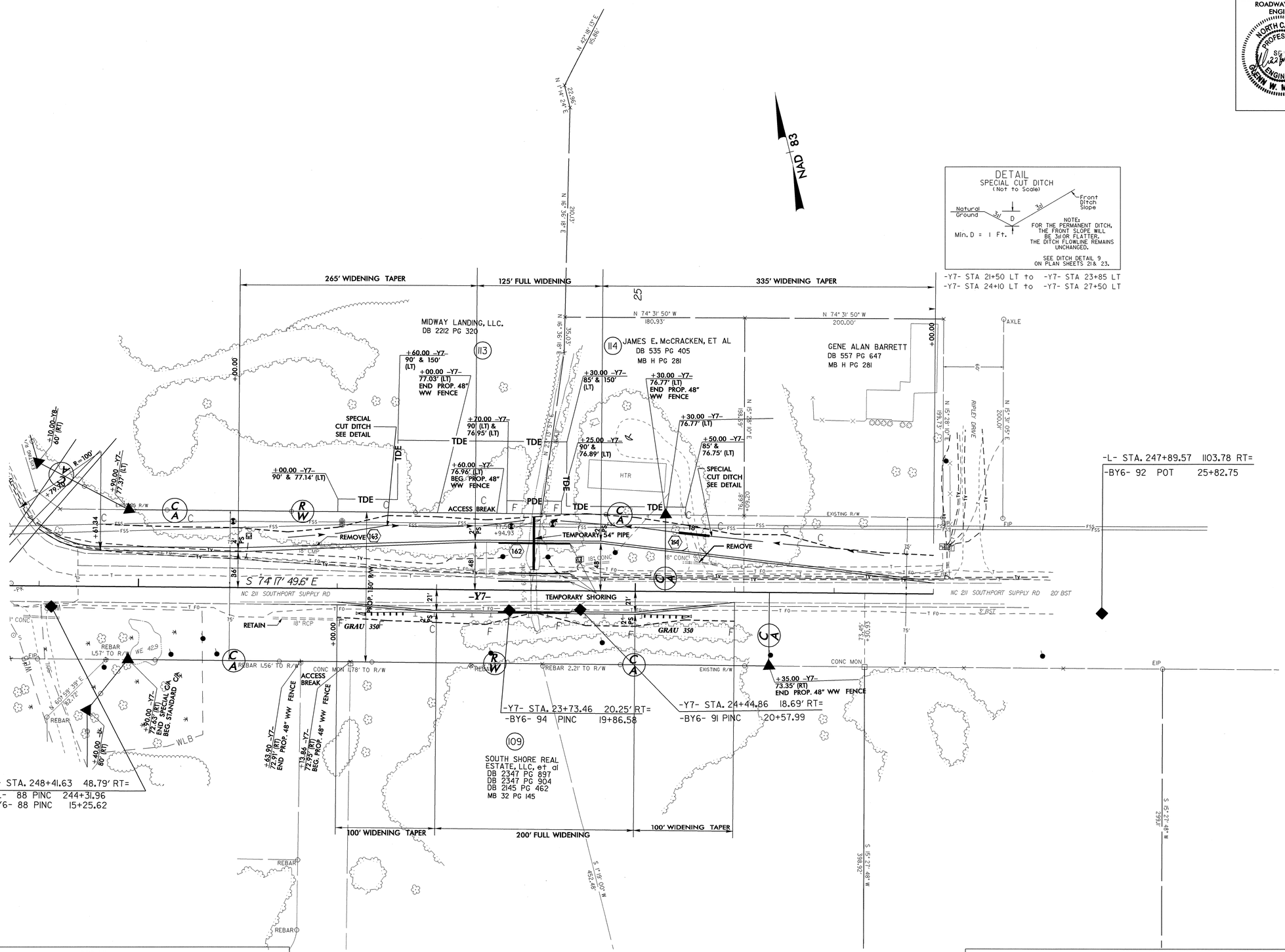

NOTES:

1) ALL PAVEMENT FOR WIDENING IS TEMPORARY
2) FOR CONSTRUCTION PHASING SEE TRAFFIC CONTROL PLANS.

DETAIL OF PROPOSED WIDENING FOR ON-SITE DETOUR FOR -Y7- (NC 211)

REVISIONS

8/17/99

22-JAN-2007 12:17
r:\Roadway\Proj\r2245_rdy_psh02f.dgn
$$$$USERNAME$$$$

RD223245 1/22/2007 r2245_rdy_psh02f TLWHITE RD Qco34

PROJECT REFERENCE NO.	SHEET NO.
R-2245	2-G
R/W SHEET NO.	

HYDRAULICS
ENGINEER
NORTH CAROLINA PROFESSIONAL SEAL 19776 ENGINEER RAY D. LOVINGGOOD
Ray D. Lovinggood
19 JAN 07

DIMENSIONS

INFILTRATION BASIN

INVERT ELEV:	23.0 FT.
MIN. REQ'D SURFACE AREA AT INVERT:	4,310 SQ. FT.
MIN REQ'D VOLUME AT ELEV 24'	5,270 CU. FT.
MIN REQ'D VOLUME AT ELEV 25'	12,600 CU. FT.
MIN REQ'D VOLUME AT ELEV 26'	22,220 CU. FT.
SIDE SLOPES:	6:1 OR FLATTER
MIN. BASE WIDTH:	34'

INFILTRATION SWALE (WEST SIDE OF –L–)

INVERT ELEV:	20.0 FT.
MIN. REQ'D SURFACE AREA AT INVERT:	2,580 SQ. FT.
MIN REQ'D VOLUME AT ELEV 21'	3,615 CU. FT.
MIN REQ'D VOLUME AT ELEV 22'	9,455 CU. FT.
SIDE SLOPES:	4:1 OR FLATTER
MIN. BASE WIDTH:	10 FT.

INFILTRATION SWALE (EAST SIDE OF –L–)

INVERT ELEV:	20.0 FT.
MIN. REQ'D SURFACE AREA AT INVERT:	2,140 SQ. FT.
MIN REQ'D VOLUME AT ELEV 21'	3,000 CU. FT.
MIN REQ'D VOLUME AT ELEV 22'	7,910 CU. FT.
SIDE SLOPES:	4:1 OR FLATTER
MIN. BASE WIDTH:	10 FT.

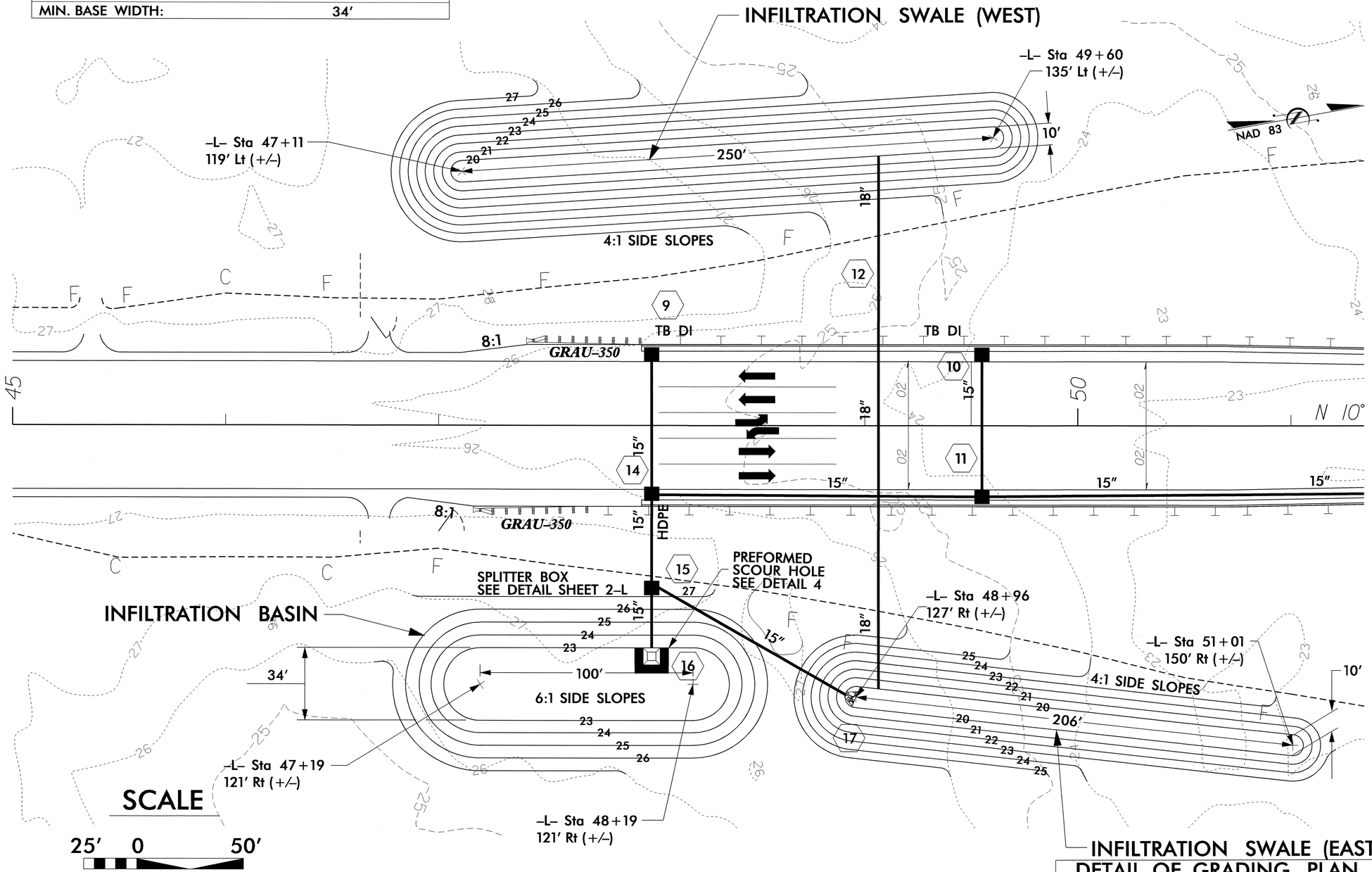

DETAIL OF GRADING PLAN FOR INFILTRATION BASIN AND INFILTRATION SWALES
SEE PLAN SHEET 6

PROJECT REFERENCE NO.	SHEET NO.
R-2245	2-H

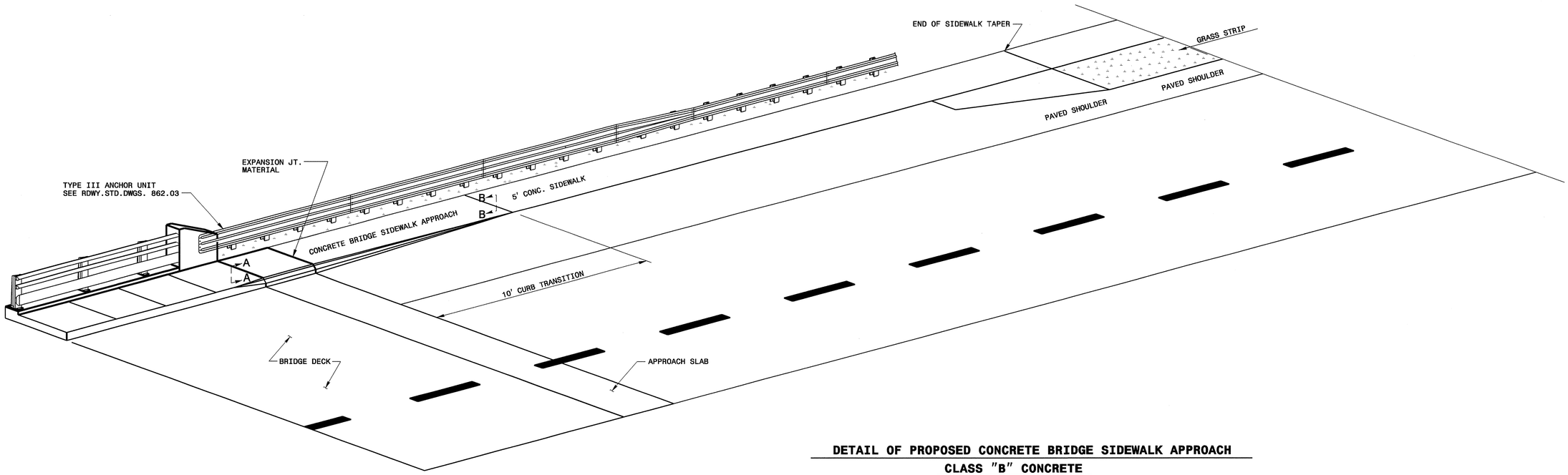

DETAIL OF PROPOSED CONCRETE BRIDGE SIDEWALK APPROACH
CLASS "B" CONCRETE

NOTES:
* REFER TO GUARDRAIL DETAILS FOR PLACEMENT OF GUARDRAIL.
* SEE STRUCTURE PLANS FOR APPROACH SLAB AND CURB DIMENSIONS.
* SEE ROADWAY PLANS FOR DRAINAGE STRUCTURE LOCATION.
* USE WITH DAVIS CANAL BRIDGE, BEGIN AND END STATIONS.

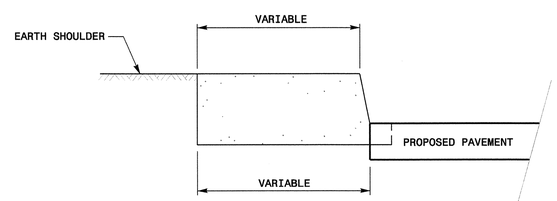

SECTION A-A

NOTE:
REFER TO ROADWAY PLAN SHEETS AND TYPICALS FOR SIDEWALK AND SHOULDER DIMENSIONS.

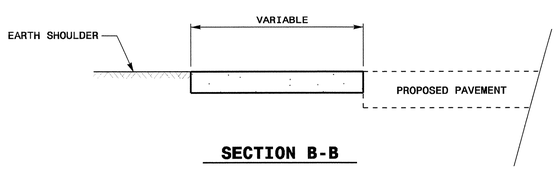

SECTION B-B

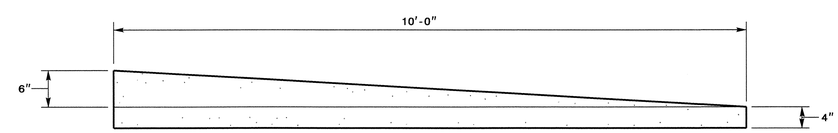

SECTION VIEW OF PROPOSED BRIDGE SIDEWALK APPROACH
CLASS "B" CONCRETE

NORTH CAROLINA PROFESSIONAL SEAL 022966 ENGINEER JOEL S. HOWERTON
1/29/07

PROJECT SERVICES UNIT
STANDARDS AND SPECIAL DESIGN
Office 919-250-4128 FAX 919-250-4119

DETAIL OF CONCRETE BRIDGE SIDEWALK APPROACH

ORIGINAL BY: E.E.WARD DATE: 11-29-04
MODIFIED BY: DATE:
CHECKED BY: DATE: 1/8/07
FILE SPEC.: details/metric/sdwlkapprch.dgn

14-DEC-2006 09:50
s:\contracts\contracts\special details\ericward\usr\details\metric\stand\sdwlk_apprch.dgn
.tspell AT P5228332

PROJECT REFERENCE NO.	SHEET NO.
R-2245	2-I

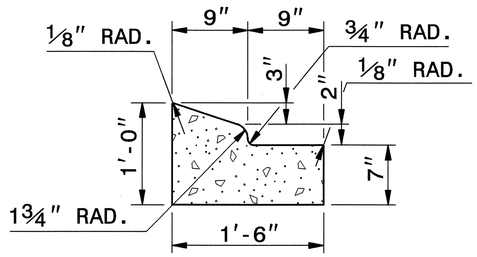

1'-6" CURB AND GUTTER

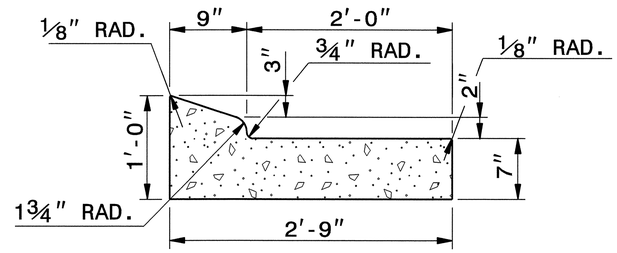

2'-9" CURB AND GUTTER

NOTE: SEE STD. DWG. 846.01 FOR ADDITIONAL CURB AND GUTTER INFORMATION.

SEE ROADWAY PLANS FOR LOCATION OF CURB TRANSITION.

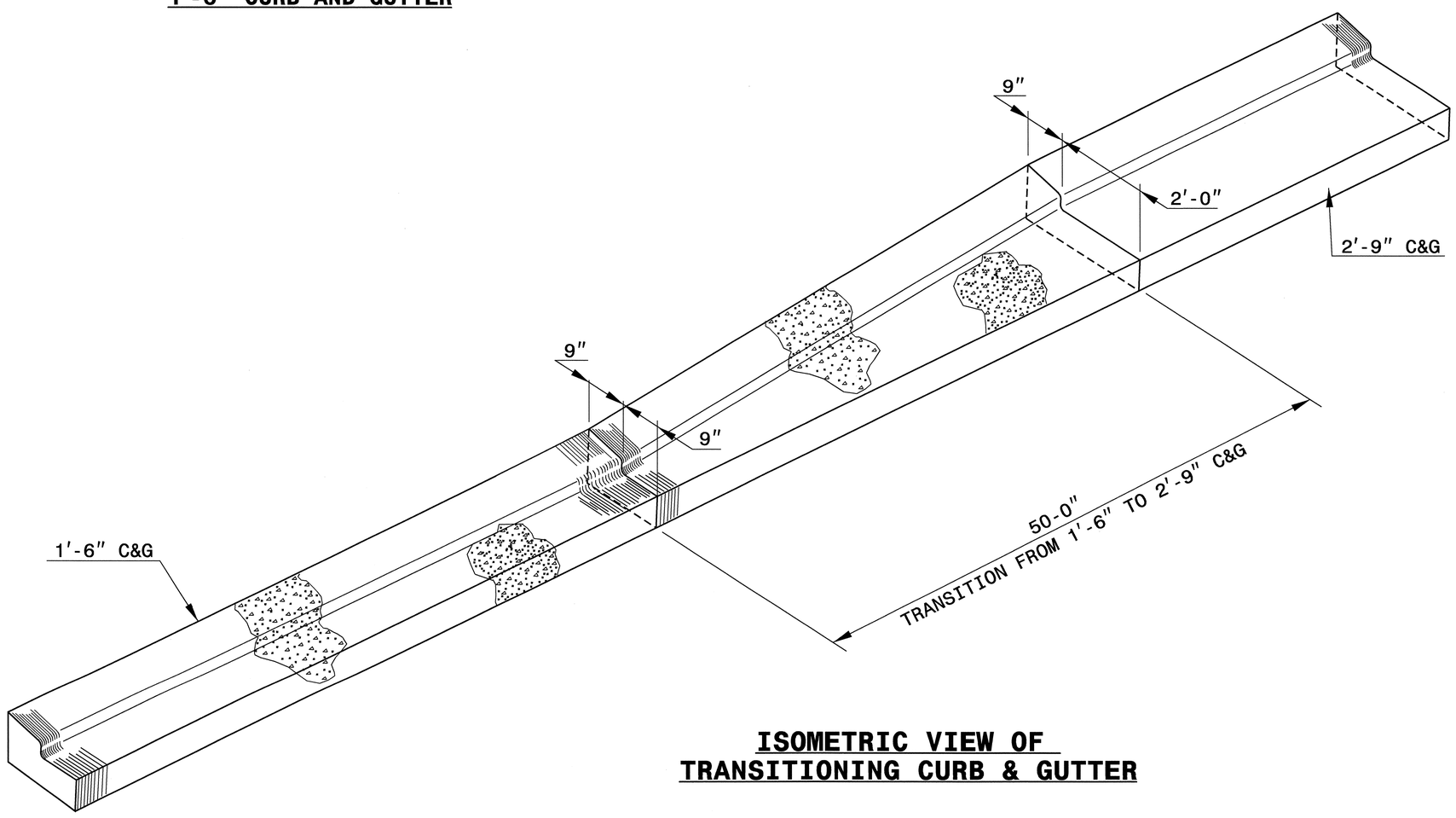

ISOMETRIC VIEW OF TRANSITIONING CURB & GUTTER

NORTH CAROLINA PROFESSIONAL SEAL 022966 ENGINEER JOEL S. HOWERTON

1/24/07

DESIGN SERVICES UNIT
STANDARDS AND SPECIAL DESIGN
Office 919-250-4128 FAX 919-250-4119

DETAIL OF 1'-6" TO 2'-9" CURB & GUTTER TRANSITION SECTION

ORIGINAL BY: T.S.SPELL DATE: NOV. 26, 2001
MODIFIED BY: T.S.SPELL DATE: AUG. 22, 2006
CHECKED BY: DATE: 1/23/07
FILE SPEC.: pw74:/usr/details/stand/cgtransit.dgn

PROJECT REFERENCE NO.	SHEET NO.
R-2245	2-J

STATE OF
NORTH CAROLINA
DEPT. OF TRANSPORTATION
DIVISION OF HIGHWAYS
RALEIGH, N.C.

7-06

ENGLISH DETAIL DRAWING FOR
METHOD FOR PLACEMENT OF
DROP INLETS IN GRASSED MEDIAN
(USING 2'-9" CURB & GUTTER)

SHEET 1 OF 1

852D04

NOTES:
REFER TO STD. NO. 840.14 AND 840.15 FOR DRAINAGE STRUCTURE.

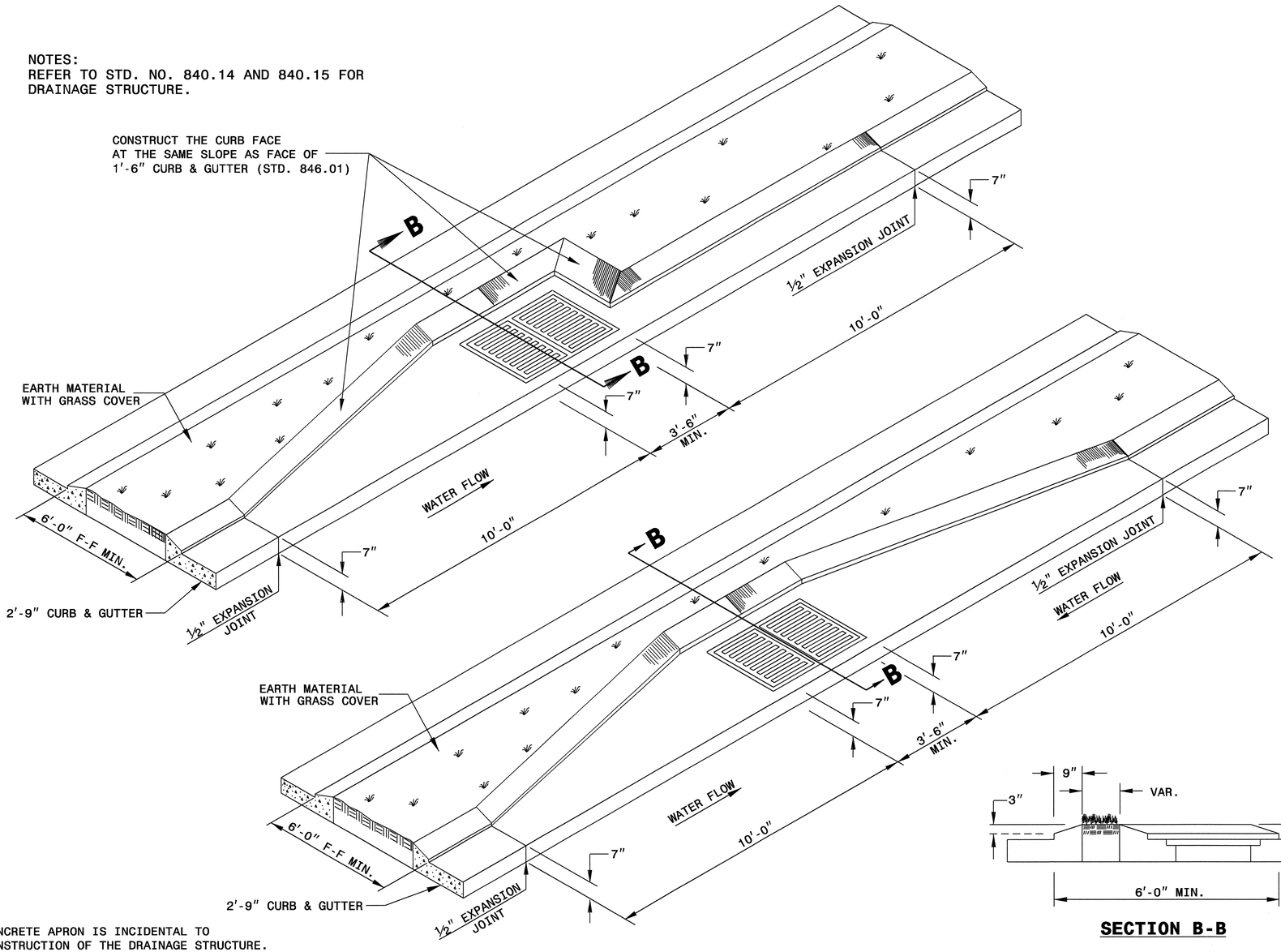

SECTION B-B

*CONCRETE APRON IS INCIDENTAL TO CONSTRUCTION OF THE DRAINAGE STRUCTURE.

STATE OF
NORTH CAROLINA
DEPT. OF TRANSPORTATION
DIVISION OF HIGHWAYS
RALEIGH, N.C.

7-06

ENGLISH DETAIL DRAWING FOR
METHOD FOR PLACEMENT OF
DROP INLETS IN GRASSED MEDIAN
(USING 2'-9" CURB & GUTTER)

SHEET 1 OF 1

852D04

NORTH CAROLINA PROFESSIONAL SEAL 022966 ENGINEER JOEL S. HOVER
1/21/17

PROJECT SERVICES UNIT
STANDARDS AND SPECIAL DESIGN
Office 919-250-4128 FAX 919-250-4119

SEE PLATE FOR TITLE

ORIGINAL BY: T.Spell DATE: Aug.21,2006
MODIFIED BY: DATE:
CHECKED BY: DATE: 8/30/06
FILE SPEC.: tspell/details/eng/stand/852d04di_med.dgn

30-AUG-2006 10:10
s:\contracts\contracts\special details\tspell\tspell\details\stand\852d04di_med.dgn
tspell AT P5228332

PROJECT REFERENCE NO.	SHEET NO.
R-2245	2-K

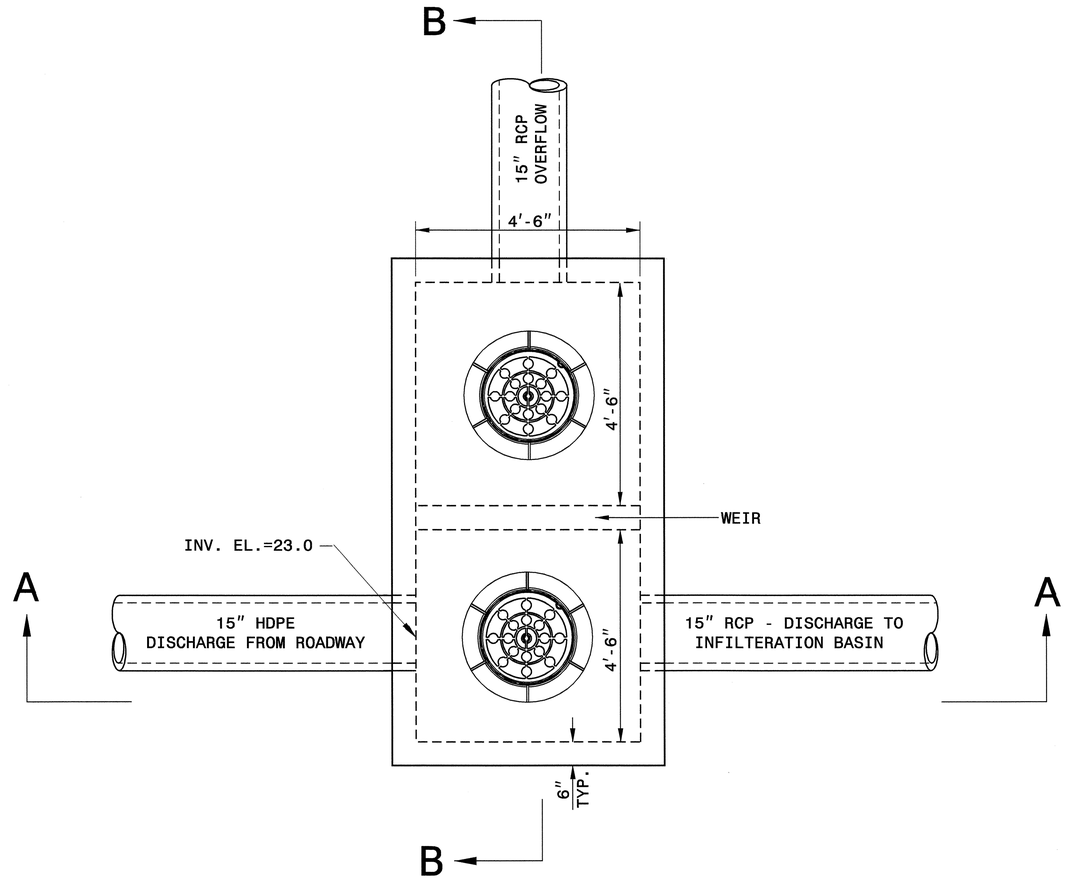

PLAN

GENERAL NOTES:

- -USE FORMS TO CONSTRUCT BOTTOM SLAB.
- -SEE STD. DWG. 840.00 FOR CONSTRUCTION OF BOTTOM SLAB IF PIPE IS SET INTO BASE SLAB.
- -USE CLASS 'B' CONCRETE THROUGHOUT.
- -REINFORCING STEEL TO BE POSITIONED AS DIRECTED BY THE ENGINEER.
- -CHAMFER ALL EXPOSED CORNERS 1".
- -SEE STD. DRAWING 840.34 FOR CONSTRUCTION OF RISER AND MANHOLE, IF REQURED.
- -JUNCTION BOXES OVER 3'-6" IN DEPTH WITH MANHOLES REQUIRE STEPS PLACED ON 12" CTRS. REFERENCE STD. NO. 840.66.
- -ADJUST DIMENSIONS FOR SMALLER PIPES. USE A MIN. OF 6" FROM INSIDE OF J.B. WALL TO OUTSIDE OF PIPE ON EACH SIDE.

BILL OF MATERIAL

BAR	NO.	SIZE	LENGTH	WEIGHT
A	16	#6	10'-6"	248
B	9	#5	5'-2"	48
TOTAL REINF. STEEL (lbs.)				296
CLASS "B" CONC. (cu. yds.)				4.2

NO DEDUCTIONS HAVE BEEN MADE TO ACCOMMODATE PIPES OR MANHOLE OPENING.

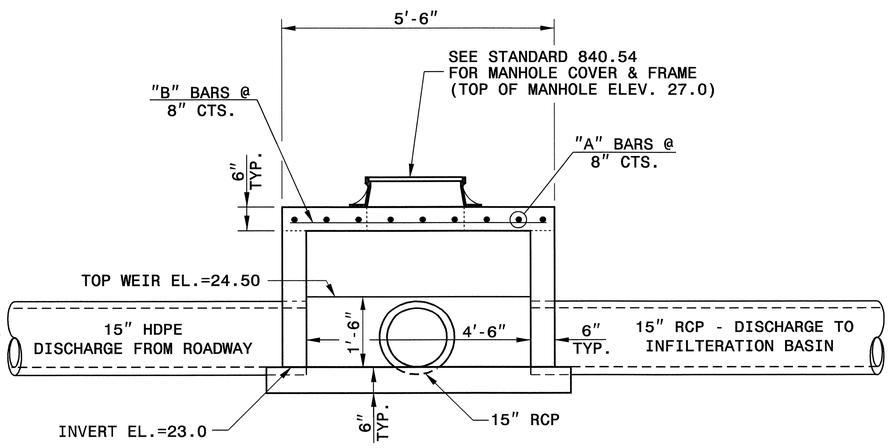

SECTION A-A

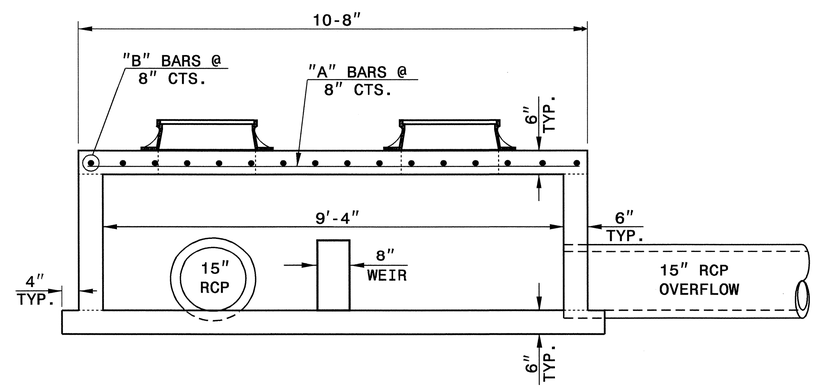

SECTION B-B

NORTH CAROLINA PROFESSIONAL SEAL 022966 ENGINEER JOEL S. HOWARD
1/24/07

PROJECT SERVICES UNIT
STANDARDS AND SPECIAL DESIGN
Office 919-250-4128 FAX 919-250-4119

DETAIL OF SPLITTER BOX

ORIGINAL BY: T.S.Spell DATE: 9-15-04
MODIFIED BY: T.S.Spell DATE: 12-20-05
CHECKED BY: DATE: 9/26/06
FILE SPEC.: w:details\stand\tbjb_weir15pipe R2245.dgn

26-APR-2006 15:01
s:\contracts\contracts\special details\tspell\tspell\details\stand\tbjb_weir15pipe.dgn
tspell AT P5228332

PROJECT REFERENCE NO.	SHEET NO.
R-2245	2-L

GENERAL NOTES:

- -USE FORMS TO CONSTRUCT BOTTOM SLAB.
- -SEE STD. DWG. 840.00 FOR CONSTRUCTION OF BOTTOM SLAB IF PIPE IS SET INTO BASE SLAB.
- -USE CLASS 'B' CONCRETE THROUGHOUT.
- -REINFORCING STEEL TO BE POSITIONED AS DIRECTED BY THE ENGINEER.
- -CHAMFER ALL EXPOSED CORNERS 1".
- -SEE STD. DRAWING 840.34 FOR CONSTRUCTION OF RISER AND MANHOLE, IF REQURED.
- -JUNCTION BOXES OVER 3'-6" IN DEPTH WITH MANHOLES REQUIRE STEPS PLACED ON 12" CTRS. REFERENCE STD. NO. 840.66.
- -ADJUST DIMENSIONS FOR SMALLER PIPES. USE A MIN. OF 6" FROM INSIDE OF J.B. WALL TO OUTSIDE OF PIPE ON EACH SIDE.

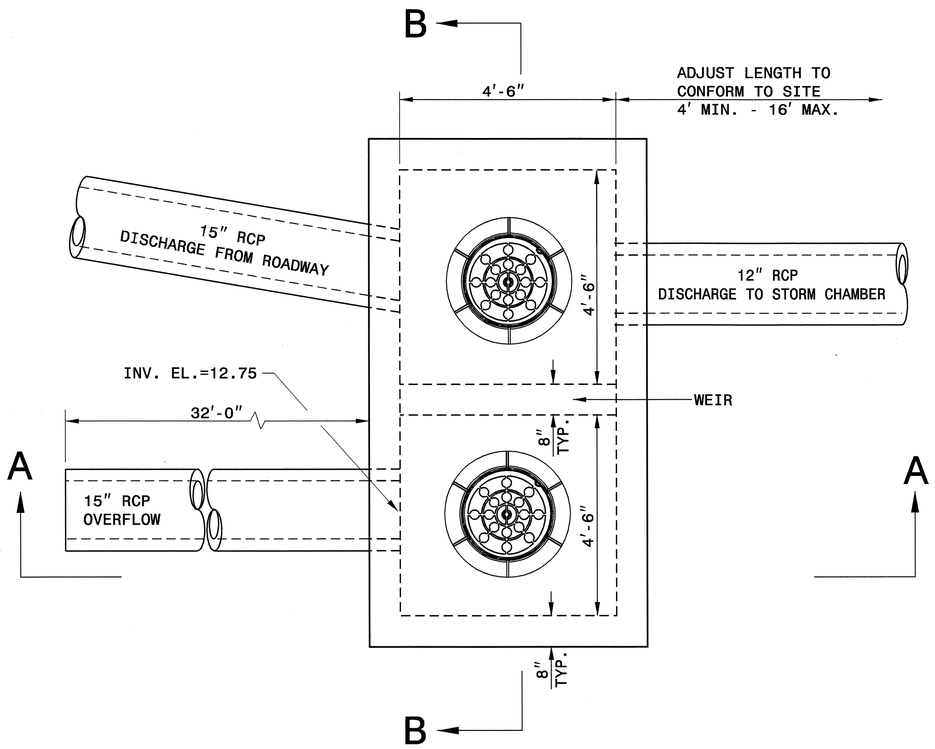

PLAN

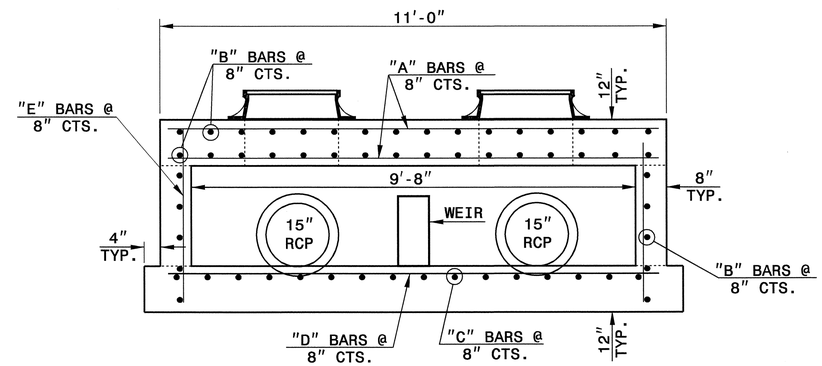

SECTION B-B

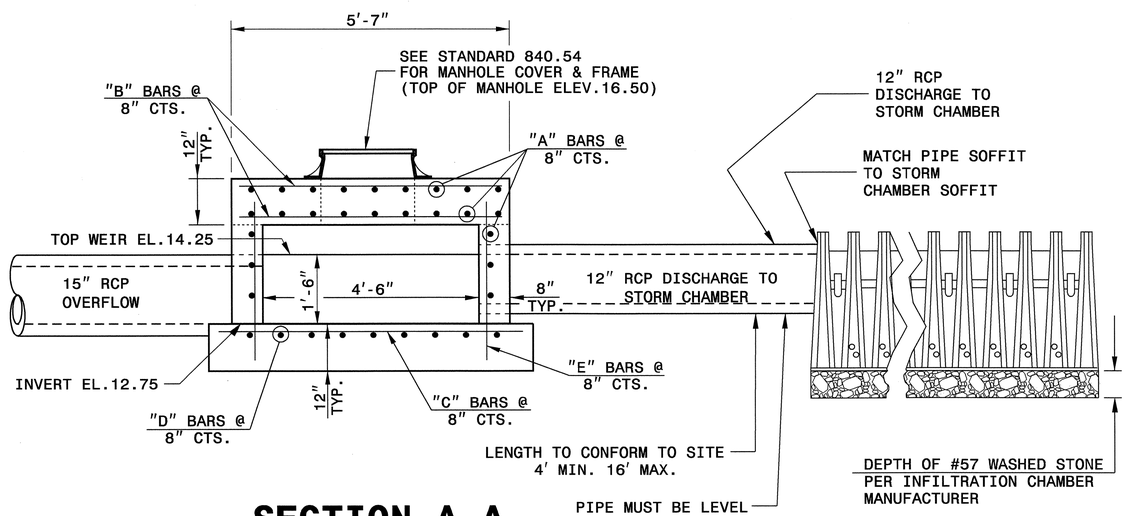

STORM CHAMBERS TO PROVIDE 1,765 CU. FT. OF STORAGE

SECTION A-A

BILL OF MATERIAL

BAR	NO.	SIZE	LENGTH	WEIGHT
A	26	#6	10'-8"	417
B	42	#5	5'-3"	230
C	18	#5	5'-11"	111
D	10	#5	11'-4"	118
E	50	#5	3'-9"	196
TOTAL REINF. STEEL (lbs.)				1072
CLASS "B" CONC. (cu. yds.)				6.6

NO DEDUCTIONS HAVE BEEN MADE TO ACCOMMODATE PIPES OR MANHOLE OPENING.

NORTH CAROLINA PROFESSIONAL SEAL 022966 ENGINEER JOEL B. HOWERTON
1/29/07

PROJECT SERVICES UNIT
STANDARDS AND SPECIAL DESIGN
Office 919-250-4128 FAX 919-250-4119

DETAIL OF TRAFFIC BEARING SPLITTER BOX

ORIGINAL BY: T.S.Spell DATE: 9-15-04
MODIFIED BY: T.S.Spell DATE: 12-20-05
CHECKED BY: DATE: 9/26/06
FILE SPEC.: w:details\stand\tbjb_weir15pipe_R2245.dgn

26-APR-2006 15:00
s:\contracts\contracts\special details\tspell\tspell\details\stand\tbjb_weir15pipe.dgn
tspell AT P5226332

PROJECT REFERENCE NO.	SHEET NO.
R-2245	2 - M

STATE OF
NORTH CAROLINA
DEPT. OF TRANSPORTATION
DIVISION OF HIGHWAYS
RALEIGH, N.C.

ENGLISH DETAIL DRAWING FOR
ALUMINUM ENDWALL FOR FIVE PIPE CULVERTS
60" X 46" PIPE ARCH 3" X 1" CORRUGATIONS - 90° SKEW

SHEET 1 OF 1
838D07

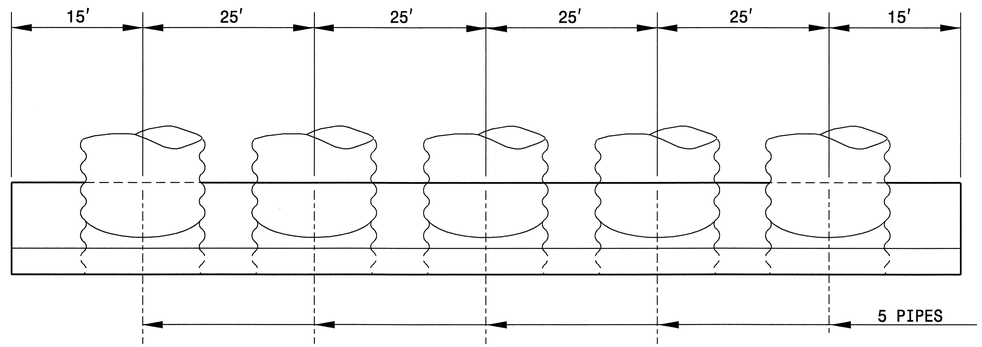

PLAN

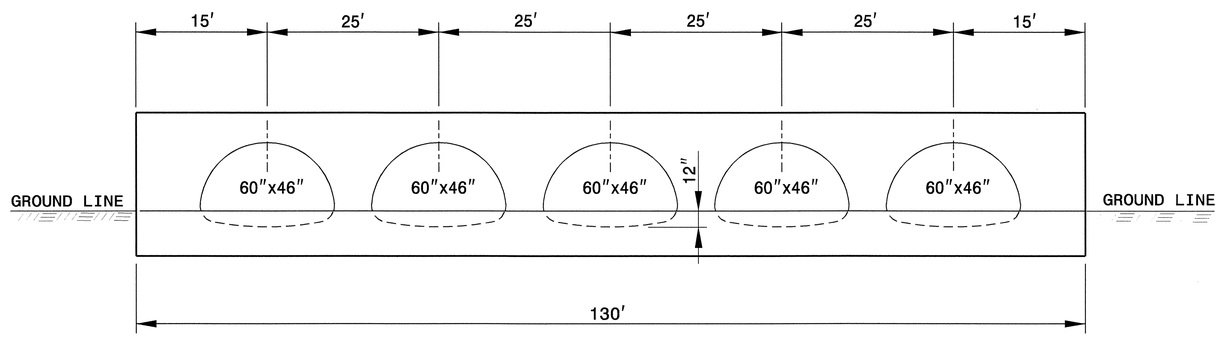

ELEVATION

NOTES:

USE ALUMINUM ENDWALL THAT MEETS NCDOT STANDARD SPECIFICATIONS 1032-2.

CONCRETE MAY BE USED IN LIEU OF ALUMINUM FOR ENDWALL CONSTRUCTION IN UPLAND (NON-WETLAND) AREAS.

SUBMIT SHOP DRAWINGS TO PROJECT SERVICES FOR APPROVAL PRIOR TO INSTALLATION.

DIMENSONS AND SHAPE OF ENDWALL MAY VARY PER DESIGN OF ENDWALL FABRICATOR.

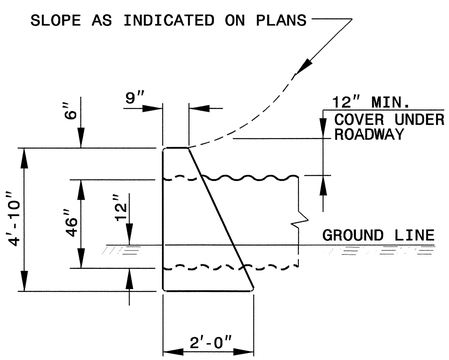

END ELEVATION

BEGIN HEADWALL
-L- STA. 146+85.00
END HEADWALL
-L- STA. 148+15.00

STATE OF
NORTH CAROLINA
DEPT. OF TRANSPORTATION
DIVISION OF HIGHWAYS
RALEIGH, N.C.

ENGLISH DETAIL DRAWING FOR
ALUMINUM ENDWALL FOR FIVE PIPE CULVERTS
60" X 46" PIPE ARCH 3" X 1" CORRUGATIONS - 90° SKEW

SHEET 1 OF 1
838D07

NORTH CAROLINA PROFESSIONAL SEAL 022966 ENGINEER JOEL S. HOWARD
1/29/07

PROJECT SERVICES UNIT
STANDARDS AND SPECIAL DESIGN
Office 919-250-4128 FAX 919-250-4119

SEE PLATE FOR TITLE

ORIGINAL BY: T.Spell DATE: 8-24-06
MODIFIED BY: DATE:
CHECKED BY: DATE: 1/4/07
FILE SPEC.: tspell/details/stand/838d0701.dgn

03-JAN-2007 15:15
s:\contracts\contracts\special details\tspell\tspell\details\stand\838d0701.dgn
tspell AT PS228332

PROJECT REFERENCE NO.	SHEET NO.
R-2245	2 - N

STATE OF
NORTH CAROLINA
DEPT. OF TRANSPORTATION
DIVISION OF HIGHWAYS
RALEIGH, N.C.

ENGLISH DETAIL DRAWING FOR
ALUMINUM ENDWALL FOR FOUR PIPE CULVERTS
60" X 46" PIPE ARCH 3" X 1" CORRUGATIONS - 90° SKEW

SHEET 1 OF 1
838D07

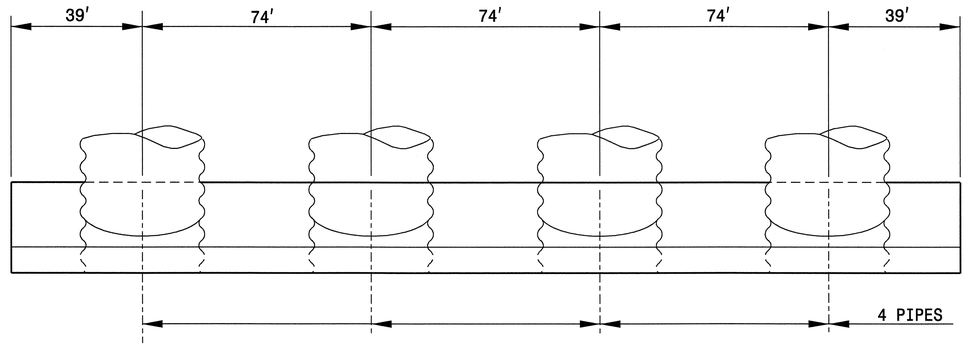

PLAN

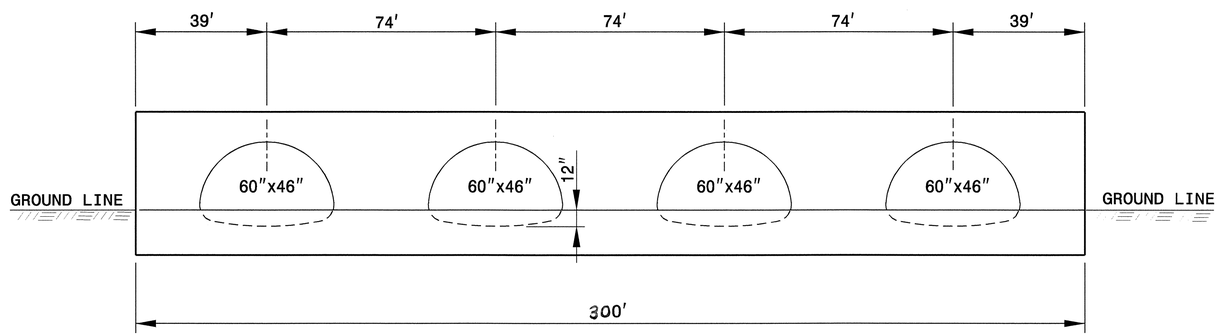

ELEVATION

NOTES:

USE ALUMINUM ENDWALL THAT MEETS NCDOT STANDARD SPECIFICATIONS 1032-2.

CONCRETE MAY BE USED IN LIEU OF ALUMINUM FOR ENDWALL CONSTRUCTION IN UPLAND (NON-WETLAND) AREAS.

SUBMIT SHOP DRAWINGS TO PROJECT SERVICES FOR APPROVAL PRIOR TO INSTALLATION.

DIMENSONS AND SHAPE OF ENDWALL MAY VARY PER DESIGN OF ENDWALL FABRICATOR.

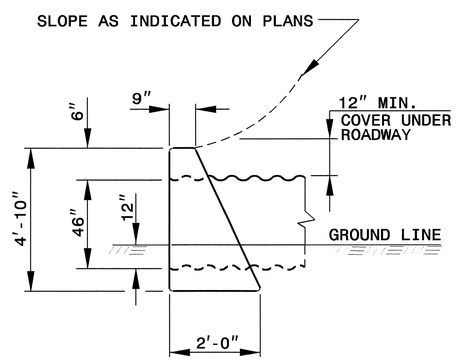

END ELEVATION

BEGIN HEADWALL
-ACC3- STA. 10+93.00
END HEADWALL
-ACC3- STA. 13+93.00

STATE OF
NORTH CAROLINA
DEPT. OF TRANSPORTATION
DIVISION OF HIGHWAYS
RALEIGH, N.C.

ENGLISH DETAIL DRAWING FOR
ALUMINUM ENDWALL FOR FOUR PIPE CULVERTS
60" X 46" PIPE ARCH 3" X 1" CORRUGATIONS - 90° SKEW

SHEET 1 OF 1
838D07

NORTH CAROLINA PROFESSIONAL SEAL 022966 ENGINEER JOEL S. HOWERTON
1/29/07

PROJECT SERVICES UNIT
STANDARDS AND SPECIAL DESIGN
Office 919-250-4128 FAX 919-250-4119

SEE PLATE FOR TITLE

ORIGINAL BY: T.Spell DATE: 8-24-06
MODIFIED BY: DATE:
CHECKED BY: DATE: 1/4/07
FILE SPEC.: tspell/details/stand/838d0701.dgn

03-JAN-2007 15:15
s:\contracts\contracts\special details\tspell\tspell\details\stand\838d0701.dgn
tspell AT PS228332

PROJECT REFERENCE NO.	SHEET
34407.1.1 (R-2245)	2-O

GEOTECHNICAL ENGINEER

NORTH CAROLINA PROFESSIONAL SEAL 26962 ENGINEER ERIC N. WILLIAMS

SIGNATURE 1/19/07 DATE

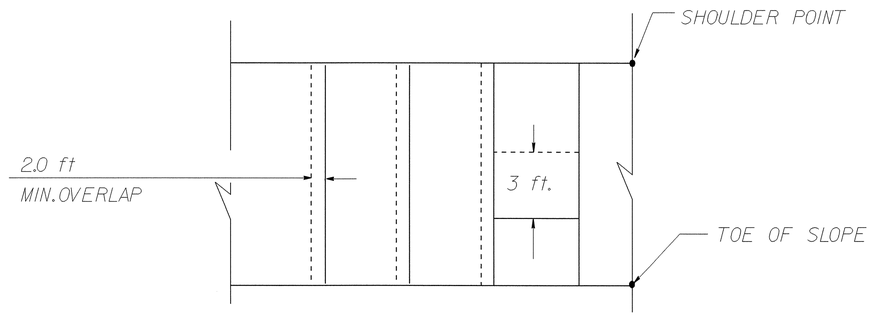

FILTER FABRIC OVERLAP DETAIL

N.T.S.

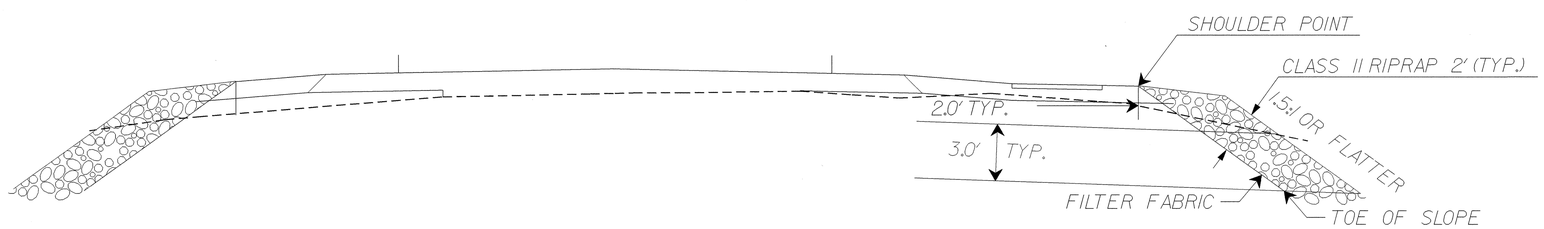

ESTIMATED QUANTITIES:

PLAIN RIP RAP, CLASS II: ..... 250 TONS
FILTER FABRIC FOR DRAINAGE: ..... 300 SQ.YD.

TYPICAL SECTION

15+50 -L- TO 16+25 -L-

20+25 -L- TO 20+66.44 -L-

N.T.S.

PREPARED BY:	W. D. FIELDS	DATE:	04/06
REVIEWED BY:	E. N. WILLIAMS	DATE:	04/06

GEOTECHNICAL ENGINEERING UNIT

■ EASTERN REGIONAL OFFICE
☐ WESTERN REGIONAL OFFICE

STATE OF NORTH CAROLINA DEPARTMENT OF TRANSPORTATION RALEIGH

ROCK PLATING

REVISIONS

NO.	BY	DATE	NO.	BY	DATE
1	-	-	3	-	-
2	-	-	4	-	-

PROJECT REFERENCE NO.	SHEET
34407.1.1 (R-2245)	2-P

GEOTECHNICAL ENGINEER

NORTH CAROLINA PROFESSIONAL SEAL 26962 ENGINEER ERIC N. WILLIAMS

Eric Williams 1/19/07
SIGNATURE DATE

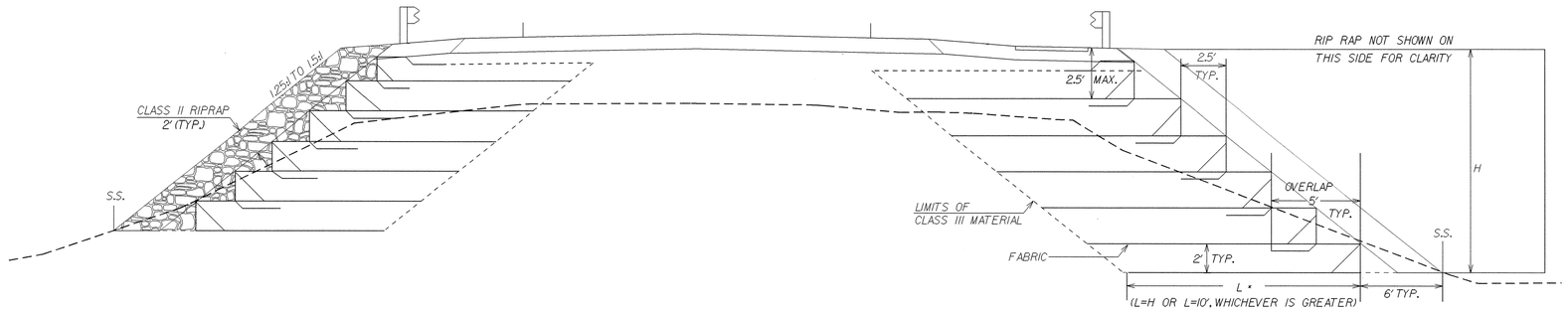

TYPICAL SECTION
16+25 -L- TO 20+25 -L-
N.T.S.

* ALL SUBSEQUENT LAYERS EQUAL TO L

NOTES:

1. THE FABRIC SHALL HAVE A MINIMUM WIDE WIDTH TENSILE STRENGTH OF 1000 LB/FT IN THE MACHINE DIRECTION (BASED ON ASTM-D4595) AT 5% ELONGATION AND A MINIMUM ULTIMATE WIDE WIDTH TENSILE STRENGTH OF 2200 LB/FT. IN THE MACHINE DIRECTION.
2. FOR REINFORCED SLOPE, SEE SPECIAL PROVISIONS.
3. LOCATIONS AND QUANTITIES PROVIDED ARE ONLY APPROXIMATE. EXACT LOCATIONS AND QUANTITIES SHALL BE DETERMINED BY THE ENGINEER IN THE FIELD.
4. THE REINFORCED SLOPE SHALL BE BENCHED INTO THE SIDE OF THE EXCAVATION WHERE APPLICABLE AND AS DIRECTED BY THE ENGINEER.
5. SELECT MATERIAL SHALL BE CLASS III IN ACCORDANCE WITH SECTION 1016 OF THE NCDOT STANDARD SPECIFICATIONS.
6. THE CONTRACTOR MAY ELECT TO USE A FORMING SYSTEM TO CONSTRUCT THE FABRIC FACE OTHER THAN THE FALSEWORK OR WIRE MESH FORM OPTIONS SHOWN IN THESE PLANS. HOWEVER; THE ALTERNATE METHOD MUST BE SUBMITTED TO THE ENGINEER FOR REVIEW AND APPROVAL.
7. LAYERS OF FABRIC MAY NEED TO BE ADDED OR SUBTRACTED AT THE TOP OF THE SLOPE AS THE EMBANKMENT HEIGHT VARIES THROUGH THE REINFORCED SECTION.
8. UNCLASSIFIED EXCAVATION TO BE PAID FOR WILL BE THE ACTUAL NUMBER OF CUBIC YARDS OF EXCAVATED MATERIAL TO THE LIMITS OF THE REINFORCEMENT SHOWN AND ACCORDING TO SECTION 225-3 OF THE NCDOT STANDARDS SPECIFICATIONS.

FORM OPTION #1

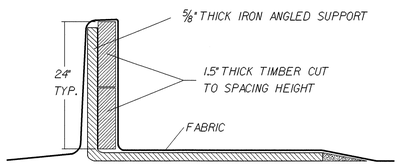

ELEVATION VIEW OF FABRIC
FACE FALSEWORK
N.T.S.

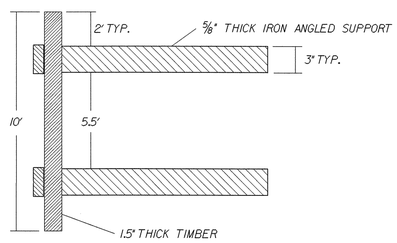

PLAN VIEW OF FABRIC
FACE FALSEWORK
N.T.S.

FORM OPTION #2

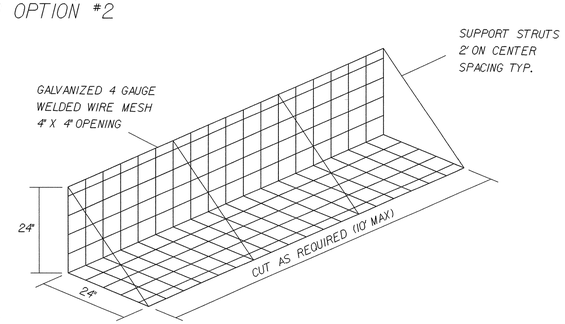

WELDED WIRE MESH FORM
N.T.S.

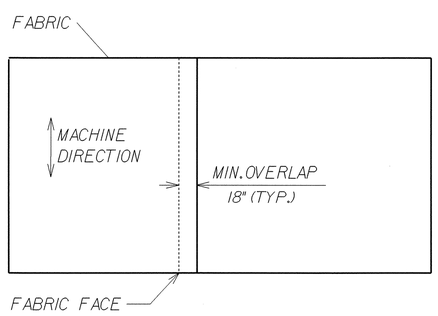

PLAN VIEW OF FABRIC OVERLAP
N.T.S.

ESTIMATED QUANTITIES

PLAIN RIP RAP, CLASS II	1350 TONS
FABRIC FOR REINFORCED SLOPE	9000 SQ.YDS.
SELECT MATERIAL, CLASS III	3500 CU.YDS.

PREPARED BY: W. D. FIELDS	DATE: 04/06
REVIEWED BY: E.N. WILLIAMS	DATE: 04/06

GEOTECHNICAL ENGINEERING UNIT
■ EASTERN REGIONAL OFFICE
☐ WESTERN REGIONAL OFFICE

STATE OF NORTH CAROLINA
DEPARTMENT OF TRANSPORTATION
RALEIGH

REINFORCED SLOPE

REVISIONS

NO.	BY	DATE	NO.	BY	DATE
1			3		
2			4		

PROJECT REFERENCE NO.	SHEET NO.
R-2245	3(1 of 2)
R/W SHEET NO.	

STATE OF NORTH CAROLINA
DIVISION OF HIGHWAYS
ROADWAY SUMMARY OF QUANTITIES FOR CONTRACT - C201550

ItemNumber	Sec #	Quantity	Unit	Description
0000100000-N	800	Lump Sum		MOBILIZATION
0000900000-N	SP	Lump Sum		GENERIC MISCELLANEOUS ITEM CONSTRUCTION SURVEYING (ICW STRUCTURE ONLY)
0000995000-E	SP	75	TON	GENERIC MISCELLANEOUS ITEM DISPOSAL OF CONTAMINATED SOIL
0001000000-E	200	Lump Sum		CLEARING & GRUBBING .. ACRE(S)
0008000000-E	200	3	ACR	SUPPLEMENTARY CLEARING & GRUBBING
0022000000-E	225	4,700	CY	UNCLASSIFIED EXCAVATION
0029000000-N	SP	Lump Sum		REINFORCED BRIDGE APPROACH FILL, STATION ********** (21+50.00-L-)
0029000000-N	SP	Lump Sum		REINFORCED BRIDGE APPROACH FILL, STATION ********** (58+00.00-L-)
0036000000-E	225	43,177	CY	UNDERCUT EXCAVATION
0080000000-E	SP	1,000	TON	CLASS IV SUBGRADE STABILIZATION
0106000000-E	230	670,500	CY	BORROW EXCAVATION
0134000000-E	240	5,293	CY	DRAINAGE DITCH EXCAVATION
0156000000-E	250	4,900	SY	REMOVAL OF EXISTING ASPHALT PAVEMENT
0177000000-E	250	3,100	SY	BREAKING OF EXISTING ASPHALT PAVEMENT
0192000000-N	260	34	HR	PROOF ROLLING
0195000000-E	265	54,000	CY	SELECT GRANULAR MATERIAL
0196000000-E	270	1,000	SY	FABRIC FOR SOIL STABILIZATION
0199000000-E	SP	18,350	SF	TEMPORARY SHORING
0234000000-E	SP	3,500	CY	GENERIC GRADING ITEM SELECT MATERIAL, CLASS III
0241000000-E	SP	9,000	SY	GENERIC GRADING ITEM FABRIC FOR REINFORCED SLOPE
0318000000-E	300	1,415	TON	FOUNDATION CONDITIONING MATERIAL, MINOR STRS
0343000000-E	310	84	LF	15" SIDE DRAIN PIPE
0344000000-E	310	68	LF	18" SIDE DRAIN PIPE
0360000000-E	310	20	LF	12" RC PIPE CULVERTS, CLASS III
0366000000-E	310	4,780	LF	15" RC PIPE CULVERTS, CLASS III
0372000000-E	310	392	LF	18" RC PIPE CULVERTS, CLASS III
0378000000-E	310	176	LF	24" RC PIPE CULVERTS, CLASS III
0396000000-E	310	1,392	LF	42" RC PIPE CULVERTS, CLASS III
0402000000-E	310	2,920	LF	48" RC PIPE CULVERTS, CLASS III
0408000000-E	310	54	LF	54" RC PIPE CULVERTS, CLASS III
0414000000-E	310	368	LF	60" RC PIPE CULVERTS, CLASS III
0536000000-E	SP	144	LF	***" HDPE PIPE CULVERTS (15")
0962000000-E	320	1,008	LF	**" X **" CAA STRUCTURAL PLATE PIPE ARCH, *****" THICK (60" x 46", 0.109")
0986000000-E	SP	170.8	LF	GENERIC PIPE ITEM STORM CHAMBER
0992000000-E	SP	6	EA	GENERIC PIPE ITEM 15" HDPE PIPE ELBOWS
0995000000-E	340	372	LF	PIPE REMOVAL
1011000000-N	500	Lump Sum		FINE GRADING
1110000000-E	510	16,000	TON	STABILIZER AGGREGATE
1121000000-E	520	73,000	TON	AGGREGATE BASE COURSE
1220000000-E	545	250	TON	INCIDENTAL STONE BASE
1297000000-E	607	1,330	SY	MILLING ASPHALT PAVEMENT, ***" DEPTH (2-1/2")
1330000000-E	607	500	SY	INCIDENTAL MILLING
1489000000-E	610	1,300	TON	ASPHALT CONC BASE COURSE, TYPE B25.0B
1491000000-E	610	2,150	TON	ASPHALT CONC BASE COURSE, TYPE B25.0C
1498000000-E	610	17,700	TON	ASPHALT CONC INTERMEDIATE COURSE, TYPE I19.0B
1503000000-E	610	650	TON	ASPHALT CONC INTERMEDIATE COURSE, TYPE 119.0C
1519000000-E	610	25,500	TON	ASPHALT CONC SURFACE COURSE, TYPE S9.5B
1523000000-E	610	2,325	TON	ASPHALT CONC SURFACE COURSE, TYPE S9.5C
1560000000-E	620	2,670	TON	ASPHALT BINDER FOR PLANT MIX, GRADE PG 64-22
1565000000-E	620	155	TON	ASPHALT BINDER FOR PLANT MIX, GRADE PG 70-22
1693000000-E	654	545	TON	ASPHALT PLANT MIX, PAVEMENT REPAIR
2022000000-E	815	68	CY	SUBDRAIN EXCAVATION
2033000000-E	815	34	CY	SUBDRAIN FINE AGGREGATE
2044000000-E	815	200	LF	6" PERFORATED SUBDRAIN PIPE
2055000000-E	815	6	EA	6" SUBDRAIN PIPE WYES, TEES, & ELBOWS
2066000000-N	815	1	EA	CONCRETE PAD FOR SUBDRAIN PIPE OUTLET
2077000000-E	815	6	LF	6" OUTLET PIPE (SUBDRAINS)
2209000000-E	838	24.4	CY	ENDWALLS
2220000000-E	838	7.9	CY	REINFORCED ENDWALLS
2286000000-N	840	72	EA	MASONRY DRAINAGE STRUCTURES
2297000000-E	840	23	CY	MASONRY DRAINAGE STRUCTURES
2364000000-N	840	44	EA	FRAME WITH TWO GRATES, STD 840.16
2365000000-N	840	5	EA	FRAME WITH TWO GRATES, STD 840.22
2367000000-N	840	22	EA	FRAME WITH TWO GRATES, STD 840.29
2374000000-N	840	1	EA	FRAME WITH GRATE & HOOD, STD 840.03, TYPE ** (F)
2396000000-N	840	7	EA	FRAME WITH COVER, STD 840.54
2474000000-N	SP	Lump Sum		GENERIC DRAINAGE ITEM ALUMINUM ENDWALLS FOR FIVE PIPE CULVERT
2474000000-N	SP	Lump Sum		GENERIC DRAINAGE ITEM ALUMINUM ENDWALLS FOR FOUR PIPE CULVERT
2535000000-E	846	275	LF	**"X **" CONCRETE CURB (8" X 18")
2538000000-E	846	7,875	LF	**"-**" CONCRETE CURB & GUTTER (2'- 9")
2542000000-E	846	24,375	LF	1'-6" CONCRETE CURB & GUTTER
2549000000-E	846	410	LF	2'-6" CONCRETE CURB & GUTTER
2556000000-E	846	1,600	LF	SHOULDER BERM GUTTER
2591000000-E	848	1,075	SY	4" CONCRETE SIDEWALK
2605000000-N	848	4	EA	CONCRETE WHEELCHAIR RAMPS
2647000000-E	852	1,800	SY	5" MONOLITHIC CONCRETE ISLANDS (SURFACE MOUNTED)
2845000000-N	858	1	EA	ADJUSTMENT OF METER BOXES OR VALVE BOXES
3030000000-E	862	2,850	LF	STEEL BM GUARDRAIL
3045000000-E	862	62.5	LF	STEEL BM GUARDRAIL, SHOP CURVED
3150000000-N	862	10	EA	ADDITIONAL GUARDRAIL POSTS
3195000000-N	862	1	EA	GUARDRAIL ANCHOR UNITS, TYPE AT-1
3215000000-N	862	8	EA	GUARDRAIL ANCHOR UNITS, TYPE III
3270000000-N	SP	11	EA	GUARDRAIL ANCHOR UNITS, TYPE 350
3345000000-E	864	337.5	LF	REMOVE & RESET EXISTING GUARDRAIL
3503000000-E	866	40,600	LF	WOVEN WIRE FENCE, 47" FABRIC
3509000000-E	866	2,650	EA	4" TIMBER FENCE POSTS, 7'-6" LONG
3515000000-E	866	520	EA	5" TIMBER FENCE POSTS, 8'-0" LONG
3536000000-E	866	3,700	LF	CHAIN LINK FENCE, 48" FABRIC
3542000000-E	866	310	EA	METAL LINE POSTS FOR 48" CHAIN LINK FENCE
3548000000-E	866	25	EA	METAL TERMINAL POSTS FOR 48" CHAIN LINK FENCE
3551000000-E	866	10	EA	METAL GATE POSTS FOR **" CHAIN LINK FENCE, SINGLE GATE (48")
3557000000-E	866	100	LF	ADDITIONAL BARBED WIRE
3564000000-E	866	5	EA	SINGLE GATES, **" HIGH, **" WIDE, **" OPENING (48" HIGH, 12' WIDE, 12' OPEN)
3564000000-E	866	4	EA	SINGLE GATES, **" HIGH, **" WIDE, **" OPENING (48" HIGH, 16' WIDE, 16' OPEN)
3565000000-E	866	1	EA	DOUBLE GATES, **" HIGH, **" WIDE, **" OPENING (48" HIGH, 10' WIDE, 20' OPEN)
3628000000-E	876	125	TON	RIP RAP, CLASS I
3635000000-E	876	1,610	TON	RIP RAP, CLASS II
3649000000-E	876	65	TON	RIP RAP, CLASS B
3656000000-E	876	4,020	SY	FILTER FABRIC FOR DRAINAGE
3659000000-N	SP	1	EA	PREFORMED SCOUR HOLES WITH LEVEL SPREADER APRON
4072000000-E	903	1,310	LF	SUPPORTS, 3-LB STEEL U-CHANNEL
4096000000-N	904	6	EA	SIGN ERECTION, TYPE D
4102000000-N	904	56	EA	SIGN ERECTION, TYPE E
4108000000-N	904	6	EA	SIGN ERECTION, TYPE F
4155000000-N	907	19	EA	DISPOSAL OF SIGN SYSTEM, U-CHANNEL
4400000000-E	1110	1,096	SF	WORK ZONE SIGNS (STATIONARY)
4405000000-E	1110	552	SF	WORK ZONE SIGNS (PORTABLE)
4410000000-E	1110	210	SF	WORK ZONE SIGNS (BARRICADE MOUNTED)
4415000000-N	1115	2	EA	FLASHING ARROW PANELS, TYPE C
4420000000-N	1120	4	EA	CHANGEABLE MESSAGE SIGN
4430000000-N	1130	430	EA	DRUMS
4435000000-N	1135	42	EA	CONES
4445000000-E	1145	376	LF	BARRICADES (TYPE III)
4450000000-N	1150	10,000	HR	FLAGGER
4465000000-N	1160	8	EA	TEMPORARY CRASH CUSHIONS
4470000000-N	1160	2	EA	RESET TEMPORARY CRASH CUSHIONS
4480000000-N	1165	2	EA	TMIA
4485000000-E	1170	670	LF	PORTABLE CONCRETE BARRIER
4495000000-E	1170	220	LF	PORTABLE CONCRETE BARRIER (DRAINAGE)
4500000000-E	1170	400	LF	RESET PORTABLE CONCRETE BARRIER
4510000000-N	SP	200	HR	POLICE
4516000000-N	1180	84	EA	SKINNY DRUM
4650000000-N	1251	623	EA	TEMPORARY RAISED PAVEMENT MARKERS
4770000000-E	1205	652	LF	COLD APPLIED PLASTIC PAVEMENT MARKING LINES, TYPE ** (4") (4)
4810000000-E	1205	197,322	LF	PAINT PAVEMENT MARKING LINES (4")
4820000000-E	1205	340	LF	PAINT PAVEMENT MARKING LINES (8")
4835000000-E	1205	1,740	LF	PAINT PAVEMENT MARKING LINES (24")
4840000000-N	1205	16	EA	PAINT PAVEMENT MARKING CHARACTER
4845000000-N	1205	122	EA	PAINT PAVEMENT MARKING SYMBOL
4847000000-E	1205	95,764	LF	POLYUREA PAVEMENT MARKING LINES (4", *********) (STANDARD GLASS BEADS)
4847110000-E	1205	74	LF	POLYUREA PAVEMENT MARKING LINES (8", *********) (STANDARD GLASS BEADS)
4847140000-E	1205	418	LF	POLYUREA PAVEMENT MARKING LINES (24", *********) (STANDARD GLASS BEADS)
4847200000-N	1205	16	EA	POLYUREA PAVEMENT MARKING CHARACTER (*********) (STANDARD GLASS BEADS)
4847220000-N	1205	76	EA	POLYUREA PAVEMENT MARKING SYMBOL (*********) (STANDARD GLASS BEADS)
4850000000-E	1205	3,119	LF	REMOVAL OF PAVEMENT MARKING LINES (4")
4860000000-E	1205	84	LF	REMOVAL OF PAVEMENT MARKING LINES (8")
4870000000-E	1205	86	LF	REMOVAL OF PAVEMENT MARKING LINES (24")
4875000000-N	1205	3	EA	REMOVAL OF PAVEMENT MARKING SYMBOLS & CHARACTERS
4900000000-N	1251	27	EA	PERMANENT RAISED PAVEMENT MARKERS
4905000000-N	1253	888	EA	SNOWPLOWABLE PAVEMENT MARKERS
5325000000-E	1510	248	LF	**" WATER LINE (14")
5325400000-E	1510	270	LF	4" WATER LINE
5325800000-E	1510	55	LF	8" WATER LINE
5326200000-E	1510	4,660	LF	12" WATER LINE
5538000000-E	1515	2	EA	4" VALVE
5546000000-E	1515	1	EA	8" VALVE
5558000000-E	1515	11	EA	12" VALVE
5649000000-N	1515	21	EA	RECONNECT WATER METER
5672000000-N	1515	8	EA	RELOCATE FIRE HYDRANT
5800000000-E	1530	196	LF	ABANDON 6" UTILITY PIPE
5801000000-E	1530	2,096	LF	ABANDON 8" UTILITY PIPE
5804000000-E	1530	2,123	LF	ABANDON 12" UTILITY PIPE
5805000000-E	1530	275	LF	ABANDON 14" UTILITY PIPE
5871700000-E	1550	450	LF	TRENCHLESS INSTALLATION OF 12" IN SOIL
6000000000-E	1605	47,000	LF	TEMPORARY SILT FENCE
6006000000-E	1610	550	TON	STONE FOR EROSION CONTROL, CLASS A
6009000000-E	1610	5,040	TON	STONE FOR EROSION CONTROL, CLASS B
6012000000-E	1610	3,120	TON	SEDIMENT CONTROL STONE
6015000000-E	1615	40	ACR	TEMPORARY MULCHING
6018000000-E	1620	1,350	LB	SEED FOR TEMPORARY SEEDING
6021000000-E	1620	5.5	TON	FERTILIZER FOR TEMPORARY SEEDING
6024000000-E	1622	2,650	LF	TEMPORARY SLOPE DRAINS
6027000000-N	1622	87	EA	INLET PROTECTION AT TEMPORARY SLOPE DRAINS
6029000000-E	SP	17,930	LF	SAFETY FENCE
6030000000-E	1630	7,755	CY	SILT EXCAVATION
6036000000-E	1631	5,000	SY	MATTING FOR EROSION CONTROL
6037000000-E	SP	10	SY	COIR FIBER MAT
6038000000-E	SP	350	SY	PERMANENT SOIL REINFORCEMENT MAT
6042000000-E	1632	5,400	LF	1/4" HARDWARE CLOTH
6045000000-E	SP	130	LF	**" TEMPORARY PIPE (24")
6048000000-E	SP	175	SY	FLOATING TURBIDITY CURTAIN
6069000000-E	1638	300	CY	STILLING BASINS
6070000000-N	SP	32	EA	SPECIAL STILLING BASINS
6071030000-E	SP	140	LF	COIR FIBER BAFFLES
6071050000-E	SP	1	EA	**" SKIMMER (2")
6084000000-E	1660	82	ACR	SEEDING & MULCHING
6087000000-E	1660	22.5	ACR	MOWING
6090000000-E	1661	350	LB	SEED FOR REPAIR SEEDING
6093000000-E	1661	0.75	TON	FERTILIZER FOR REPAIR SEEDING
6096000000-E	1662	900	LB	SEED FOR SUPPLEMENTAL SEEDING
6108000000-E	1665	61.25	TON	FERTILIZER TOPDRESSING
6111000000-E	SP	30	LF	IMPERVIOUS DIKE
6114000000-N	SP	7.5	HR	SPECIALIZED HAND MOWING
6117000000-N	SP	36	EA	RESPONSE FOR EROSION CONTROL
6123000000-E	1670	0.5	ACR	REFORESTATION
7060000000-E	1705	2,264	LF	SIGNAL CABLE

5/14/99
12-OCT-2006 10:58
f:\c201550\proj\r2245_rdy_sum.dgn
$$$$USERNAME$$$$

STATE OF NORTH CAROLINA
SUMMARY OF QUANTITIES

PROJECT REFERENCE No.	SHEET No.
R-2245	3 (2 of 2)

ItemNumber	Sec #	Quantity	Unit	Description
7120000000-E	1705	8	EA	VEHICLE SIGNAL HEAD (12", 3 SECTION)
7264000000-E	1710	471	LF	MESSENGER CABLE (3/8")
7288000000-E	1715	189	LF	PAVED TRENCHING (**********) (1, 2")
7300000000-E	1715	2,299	LF	UNPAVED TRENCHING (**********) (1, 2")
7301000000-E	1715	482	LF	DIRECTIONAL DRILL (**********) (2, 2")
7324000000-N	1716	19	EA	JUNCTION BOX (STANDARD SIZE)
7360000000-N	1720	5	EA	WOOD POLE
7372000000-N	1721	8	EA	GUY ASSEMBLY
7408000000-E	1722	1	EA	1" RISER WITH WEATHERHEAD
7420000000-E	1722	6	EA	2" RISER WITH WEATHERHEAD
7444000000-E	1725	3,331	LF	INDUCTIVE LOOP SAWCUT
7456000000-E	1726	4,820	LF	LEAD-IN CABLE (**********) (18-2)
7456000000-E	1726	120	LF	LEAD-IN CABLE (**********) (18-4)
7484000000-N	SP	2	EA	MICROWAVE VEHICLE DETECTOR
7588000000-N	SP	8	EA	METAL POLE WITH SINGLE MAST ARM
7613000000-N	SP	8	EA	SOIL TEST
7614100000-E	SP	60	CY	DRILLED PIER FOUNDATION
7631000000-N	SP	8	EA	MAST ARM WITH METAL POLE DESIGN
7636000000-N	1745	2	EA	SIGN FOR SIGNALS
7684000000-N	1750	2	EA	SIGNAL CABINET FOUNDATION
7688000000-N	1753	2	EA	CABINET BASE ADAPTER
7756000000-N	1751	2	EA	CONTROLLER WITH CABINET (TYPE 2070L, BASE MOUNTED)
7780000000-N	1751	12	EA	DETECTOR CARD (TYPE 2070L)
7980000000-N	SP	14	EA	GENERIC SIGNAL ITEM POLYCARBONATE VEHICLE SIGNAL HEAD, (12", 3 SECT)

ItemNumber	Sec #	Quantity	Unit	Description
7980000000-N	SP	2	EA	GENERIC SIGNAL ITEM POLYCARBONATE VEHICLE SIGNAL HEAD, (12", 5 SECT)

COMPUTED BY: B.C.F.	DATE: 09/07/06
CHECKED BY: T.L.W.	DATE: 01/03/07

STATE OF NORTH CAROLINA
DIVISION OF HIGHWAYS

PROJECT REFERENCE NO.	SHEET NO.
R-2245	3-A

LIST OF PIPES, ENDWALLS, ETC. (FOR PIPES 48" & UNDER)

STATION	LOCATION (LT,RT, OR CL)	STRUCTURE NO. FROM	STRUCTURE NO. TO	TOP ELEVATION	INVERT ELEVATION	INVERT ELEVATION	SLOPE CRITICAL	CLASS III R.C. PIPE (UNLESS NOTED OTHERWISE) * CLASS IV R.C. PIPE ** HDPE PIPE 12"	15"	18"	24"	30"	36"	42"	48"
-L- 22+60	LT.	1		19.0'											
-L-		1	2		15.9'	15.7'	X		36						
-L- 22+60	RT.	2		19.0'											
-L-		2	4		15.7'	15.1'	X		100						
-L- 23+65	RT.	4		18.7'											
-L-		3	4		15.6'	15.1'			36						
-L- 23+65	LT.	3		18.7'											
-L-		4	7		15.1'	12.8'			72						
-L-		7	5		12.8'	12.7'	X		32						
-L- 24+38.23	RT.	7		16.7'											
-L-		7	6		13.3'	13.3'		20							
-L- 48+00	LT.	9		37.7'											
-L-		9	14		34.5'	34.2'	X		60						
-L- 48+00	RT.	14		37.7'											
-L-		14	15		34.2'	23.0'			**40						
-L- 48+00	RT.	15		27.0'											
-L-		15	16		23.0'	23.0'	X		24						
-L- 48+00	RT.	16													
-L-		15	17		23.0'	20.0'			104						
-L- 49+06.48		12			20.0'	20.0'				252					
-L- 49+55	LT.	10		44.3'											
-L-		10	11		41.1'	40.8'	X		60						
-L- 49+55	RT.	11		44.4'											
-L-		11	14		40.8'	34.2'			148						
-L-		20	11		57.4'	40.8'			320						
-L- 52+75	LT.	19		60.9'											
-L-		19	20		57.7'	57.4'	X		56						
-L- 52+75	RT.	20		60.9'											
-L- 63+20	LT.	21		61.2'											
-L-		21	22		57.8'	58.1'	X		60						
-L- 63+20	RT.	22		61.2'											
-L-		21	23		57.8'	48.3'			192						
-L- 65+15	LT.	23		51.8'											
-L-		23	24		48.3'	48.7'	X		60						
-L- 65+15	RT.	24		51.8'											
-L-		24	24A		48.7'	52.0'			72						
-L- 64+40	RT.	24A		55.2'											
-L-		23	25		48.3'	45.6'			76						
-L- 65+90	LT.	25		48.8'											
-L-		25	26		45.6'	45.5'	X		16						
-L- 70+90	CL	18			25.1'	25.0'					176				
-L- 70+00	CL	27		38.8'											
-L-		27	28		35.7'	30.2'			64						
-L- 72+30	CL	29		34.8'											
-L-		29	30		31.6'	28.4'			44						
-L- 72+50	RT.	30		32.6'											
-L-		30	31		28.4'	19.4'			**40						
-L- 74+64.84		32			18.2'	18.7'									172
-L- 75+50	CL	33		30.8'											
-L-		33	34		27.7'	27.2'			44						
-DRIVE- 10+95		8													
SHEET TOTAL									1,676	252	176				172
								20	**80						

STATION	BITUMINOUS COATED C.S. PIPE TYPE B (UNLESS NOTED OTHRWISE) 12" .064	15" .064	18" .064	24" .064	24"	30" .079	30"	36" .079	36"	42" .109	42"	48" .109	48"	15" SIDE DRAIN PIPE	18" SIDE DRAIN PIPE	24" SIDE DRAIN PIPE	ENDWALLS STD. 838.01, STD. 838.11 OR STD. 838.80 (UNLESS NOTED OTHERWISE) CU. YDS. R.C.P.	C.S.P.	QUANTITIES FOR DRAINAGE STRUCTURES PER EACH (0' THRU 5.0')	* TOTAL L.F. FOR PAY QUANTITY SHALL BE COL. 'A' + (1.3 X COL.'B') LIN. *FT. A 5.0' THRU 10.0'	B 10.0' AND ABOVE	C.B. STD. 840.01 OR STD. 840.02	FRAME, GRATES AND HOOD STANDARD 840.03 TYPE OF GRATE E	F	G
-L- 22+60 LT.																			1						
-L- 1-2																									
-L- 22+60 RT.																			1			1		1	
-L- 2-4																									
-L- 23+65 RT.																			1						
-L- 3-4																									
-L- 23+65 LT.																			1						
-L- 4-7																									
-L- 7-5																									
-L- 24+38.23 RT.																			1						
-L- 7-6																									
-L- 48+00 LT.																			1						
-L- 9-14																									
-L- 48+00 RT. (14)																			1						
-L- 14-15																									
-L- 48+00 RT. (15)																			1						
-L- 15-16																									
-L- 48+00 RT. (16)																									
-L- 15-17																									
-L- 49+06.48																									
-L- 49+55 LT.																			1						
-L- 10-11																									
-L- 49+55 RT.																			1						
-L- 11-14																									
-L- 20-11																									
-L- 52+75 LT.																			1						
-L- 19-20																									
-L- 52+75 RT.																			1						
-L- 63+20 LT.																			1						
-L- 21-22																									
-L- 63+20 RT.																			1						
-L- 21-23																									
-L- 65+15 LT.																			1						
-L- 23-24																									
-L- 65+15 RT.																			1						
-L- 24-24A																									
-L- 64+40 RT.																			1						
-L- 23-25																									
-L- 65+90 LT.																			1						
-L- 25-26																									
-L- 70+90 CL																									
-L- 70+00 CL																			1						
-L- 27-28																									
-L- 72+30 CL																			1						
-L- 29-30																									
-L- 72+50 RT.																			1						
-L- 30-31																									
-L- 74+64.84																	6.0								
-L- 75+50 CL																			1						
-L- 33-34																									
-DRIVE- 10+95														84											
SHEET TOTAL														84			6.0		22			1		1	

STATION	D.I. STD. 840.14 OR STD. 840.15	D.I. FRAME & GRATE STD. 840.16	M.D.I. TYPE "A" STD. 840.17 OR 840.26	M.D.I. TYPE "B" STD. 840.18 OR 840.27	M.D.I. TYPE "D" STD. 840.19 OR 840.28	M.D.I. FRAME WITH GRATE STD. 840.22	M.D.I. FRAME WITH TWO GRATES STD. 840.22	M.D.I. (N.S.) FRAME WITH GRATE STD. 840.24	M.D.I. (N.S.) FRAME WITH TWO GRATES STD. 840.29	J.B. STD. 840.31 OR 840.32	T.B.D.I. STD. 840.35	T.B.D.I. FRAME WITH GRATE STD. 840.37	C.B. STD. 840.04 OR 840.05	M.H. FRAME & COVER STD. 840.54	SPLITTER BOX SEE DETAIL SHEET 2-K	T.B.J.B. STD. 840.34	HDPE ELBOWS NO. & SIZE	TRAFFIC BEARING SPLITTER BOX SEE DETAIL SHEET 2-L	PREFORMED SCOUR HOLE SEE DRAINAGE DETAIL 4	CONC. & BRICK PIPE PLUG, C.Y. STD. 840.71	PIPE REMOVAL LIN.FT.	REMARKS
-L- 22+60 LT.									1		1											
-L- 1-2																						
-L- 22+60 RT.																						
-L- 2-4																						
-L- 23+65 RT.									1		1											
-L- 3-4																						
-L- 23+65 LT.									1		1											
-L- 4-7																						
-L- 7-5																						
-L- 24+38.23 RT.														2				1				
-L- 7-6																						
-L- 48+00 LT.									1		1											
-L- 9-14																						
-L- 48+00 RT. (14)									1		1											
-L- 14-15																						
-L- 48+00 RT. (15)														2	1							
-L- 15-16																						
-L- 48+00 RT. (16)																			1			
-L- 15-17																						
-L- 49+06.48																						
-L- 49+55 LT.									1		1											
-L- 10-11																						
-L- 49+55 RT.									1		1											
-L- 11-14																						
-L- 20-11																						
-L- 52+75 LT.									1		1											
-L- 19-20																						
-L- 52+75 RT.									1		1											
-L- 63+20 LT.									1		1											
-L- 21-22																						
-L- 63+20 RT.									1		1											
-L- 21-23																						
-L- 65+15 LT.									1		1											
-L- 23-24																						
-L- 65+15 RT.									1		1											
-L- 24-24A																						
-L- 64+40 RT.									1		1											
-L- 23-25																						
-L- 65+90 LT.									1		1											
-L- 25-26																						
-L- 70+90 CL																						
-L- 70+00 CL									1		1											
-L- 27-28																						
-L- 72+30 CL									1		1											
-L- 29-30																						
-L- 72+50 RT.														1		1						
-L- 30-31																	2 @15"					
-L- 74+64.84																						
-L- 75+50 CL	1	1																				
-L- 33-34																						
-DRIVE- 10+95																						
SHEET TOTAL	1	1							17		17			5	1	1	2 @15"	1	1			

ABBREVIATIONS

C.B.	CATCH BASIN
N.D.I.	NARROW DROP INLET
D.I.	DROP INLET
M.D.I.	MEDIAN DROP INLET
M.D.I. (N.S.)	MEDIAN DROP INLET (NARROW SLOT)
J.B.	JUNCTION BOX
M.H.	MANHOLE
T.B.D.I.	TRAFFIC BEARING DROP INLET
T.B.J.B.	TRAFFIC BEARING JUCTION BOX
H.D.P.E.	HIGH DENSITY POLYETHYLENE

6/20/00

12-JAN-2007 08:36
r:\roadway\proj\r2245_rdy_sum.dgn
$$$$USERNAME$$$$

6/20/00

COMPUTED BY: B.C.F. DATE: 09/07/06
CHECKED BY: T.L.W. DATE: 01/03/07

STATE OF NORTH CAROLINA
DIVISION OF HIGHWAYS

PROJECT REFERENCE NO.	SHEET NO.
R-2245	3-B

LIST OF PIPES, ENDWALLS, ETC. (FOR PIPES 48" & UNDER)

CLASS III R.C. PIPE (UNLESS NOTED OTHERWISE) * CLASS IV R.C. PIPE ** HDPE PIPE

STATION / SIZE / THICKNESS OR GAUGE	LOCATION (LT,RT, OR CL)	STRUCTURE NO. FROM	STRUCTURE NO. TO	TOP ELEVATION	INVERT ELEVATION	INVERT ELEVATION	SLOPE CRITICAL	12"	15"	18"	24"	30"	36"	42"	48"
-L- 76+00	RT.	34		30.4'											
-L-		34	35		27.2'	25.6'			32						
-L- 76+00	RT.	35		29.7'											
-L-		35	36		25.6'	19.2'			**32						
-L- 77+75	CL	37		29.1'											
-L-		37	38		25.5'	25.3'	X		32						
-L- 77+75	RT.	38		29.3'											
-L-		38	39		25.3'	19.8'			**32						
-L- 78+50	CL	40		29.0'											
-L-		40	37		25.9'	25.5'	X		72						
-L- 79+10.64		42			16.7'	19.4'								912	
-L- 80+25	CL	43		29.5'											
-L-		43	44		26.4'	26.1'	X		120						
-L- 81+50	CL	44		30.0'											
-L-		44	45		26.1'	22.7'			60						
-L- 84+00	CL	46		31.0'											
-L-		46	47		27.9'	24.1'			60						
-L- 87+00	CL	48		32.1'											
-L-		48	49		28.9'	26.0'			56						
-L- 90+00	CL	50		33.2'											
-L-		50	51		30.0'	26.4'			60						
-L- 96+50		53			28.0'	28.2'									128
-L-		54	55		32.7'	34.4'			56						
-L- 97+65	CL	55		37.6'											
-L-		55	56		34.4'	36.1'			80						
-L- 98+50	CL	56		39.3'											
-L- 100+50	CL	57		42.1'											
-L-		57	58		39.0'	35.9'			56						
-L- 103+00	CL	59		42.9'											
-L-		59	60		39.7'	37.5'			60						
-L- 105+50	CL	61		43.8'											
-L-		61	62		40.6'	38.0'			60						
-L- 108+00	CL	63		44.6'											
-L-		63	64		41.5'	38.4'			60						
-L- 109+38		65			36.4'	35.1'								144	
-L- 110+55	CL	66		46.1'											
-L-		66	67		42.9'	38.5'			60						
-L- 111+05		68			36.9'	38.0'									132
-L- 122+53		69			41.4'	39.8'								208	
-L- 129+19	CL	70		57.5'											
-L-		70	71		54.3'	53.1'			48						
-L- 130+00	CL	72		58.1'											
-L-		72	73		54.9'	53.4'			48						
-L- 131+50	CL	74		59.2'											
-L-		74	75		56.0'	52.7'			56						
-L- 134+00	CL	76		60.7'											
-L-		76	77		57.5'	54.1'			60						
SHEET TOTAL									1,136					1,264	260
									**64						

BITUMINOUS COATED C.S. PIPE TYPE B (UNLESS NOTED OTHRWISE); ENDWALLS STD. 838.01, STD. 838.11 OR STD. 838.80 (UNLESS NOTED OTHERWISE) CU. YDS.; QUANTITIES FOR DRAINAGE STRUCTURES (* TOTAL L.F. FOR PAY QUANTITY SHALL BE COL. 'A' + (1.3 X COL.'B')); FRAME, GRATES AND HOOD STANDARD 840.03 – TYPE OF GRATE

STATION	FROM	TO	12" .064	15" .064	18" .064	24" .064	30" .079	36" .079	42" .109	48" .109	15" SIDE DRAIN PIPE	18" SIDE DRAIN PIPE	24" SIDE DRAIN PIPE	ENDWALLS R.C.P.	ENDWALLS C.S.P.	PER EACH (0' THRU 5.0')	LIN. *FT. A 5.0' THRU 10.0'	LIN. *FT. B 10.0' AND ABOVE	C.B. STD. 840.01 OR STD. 840.02	E	F	G
-L- 76+00	34															1						
-L-	34	35																				
-L- 76+00	35															1						
-L-	35	36																				
-L- 77+75	37															1						
-L-	37	38																				
-L- 77+75	38															1						
-L-	38	39																				
-L- 78+50	40															1						
-L-	40	37																				
-L- 79+10.64	42													6.0								
-L- 80+25	43															1						
-L-	43	44																				
-L- 81+50	44															1						
-L-	44	45																				
-L- 84+00	46															1						
-L-	46	47																				
-L- 87+00	48															1						
-L-	48	49																				
-L- 90+00	50															1						
-L-	50	51																				
-L- 96+50	53																					
-L-	54	55																				
-L- 97+65	55															1						
-L-	55	56																				
-L- 98+50	56															1						
-L- 100+50	57															1						
-L-	57	58																				
-L- 103+00	59															1						
-L-	59	60																				
-L- 105+50	61															1						
-L-	61	62																				
-L- 108+00	63															1						
-L-	63	64																				
-L- 109+38	65													4.5								
-L- 110+55	66															1						
-L-	66	67																				
-L- 111+05	68																					
-L- 122+53	69													4.5								
-L- 129+19	70															1						
-L-	70	71																				
-L- 130+00	72															1						
-L-	72	73																				
-L- 131+50	74															1						
-L-	74	75																				
-L- 134+00	76															1						
-L-	76	77																				
SHEET TOTAL														15		21						

STATION	FROM	TO	D.I. STD. 840.14 OR STD. 840.15	D.I. FRAME & GRATE STD. 840.16	M.D.I. TYPE "A" STD. 840.17 OR 840.26	M.D.I. TYPE "B" STD. 840.18 OR 840.27	M.D.I. TYPE "D" STD. 840.19 OR 840.28	M.D.I. FRAME WITH GRATE STD. 840.22	M.D.I. FRAME WITH TWO GRATES STD. 840.22	M.D.I. (N.S.) FRAME WITH GRATE STD. 840.24	M.D.I. (N.S.) FRAME WITH TWO GRATES STD. 840.29	J.B. STD. 840.31 OR 840.32	T.B.D.I. STD. 840.35	T.B.D.I. FRAME WITH GRATE STD. 840.37	C.B. STD. 840.04 OR 840.05	M.H. FRAME & COVER STD. 840.54	SPLITTER BOX SEE DETAIL SHEET 2-K	T.B.J.B. STD. 840.34	HDPE ELBOWS NO. & SIZE	TRAFFIC BEARING SPLITTER BOX SEE DETAIL SHEET 2-L	PREFORMED SCOUR HOLE SEE DRAINAGE DETAIL 4	CONC. & BRICK PIPE PLUG, C.Y. STD. 840.71	PIPE REMOVAL LIN.FT.	REMARKS
-L- 76+00	34		1	1																				
-L-	34	35																						
-L- 76+00	35															1		1						
-L-	35	36																	2 @15"					
-L- 77+75	37		1	1																				
-L-	37	38																						
-L- 77+75	38															1		1						
-L-	38	39																	2 @15"					
-L- 78+50	40		1	1																				
-L-	40	37																						
-L- 79+10.64	42																							2 PIPES @ 42"
-L- 80+25	43		1	1																				
-L-	43	44																						
-L- 81+50	44		1	1																				
-L-	44	45																						
-L- 84+00	46		1	1																				
-L-	46	47																						
-L- 87+00	48		1	1																				
-L-	48	49																						
-L- 90+00	50		1	1																				
-L-	50	51																						
-L- 96+50	53																							
-L-	54	55																						
-L- 97+65	55		1	1																				
-L-	55	56																						
-L- 98+50	56		1	1																				
-L- 100+50	57		1	1																				
-L-	57	58																						
-L- 103+00	59		1	1																				
-L-	59	60																						
-L- 105+50	61		1	1																				
-L-	61	62																						
-L- 108+00	63		1	1																				
-L-	63	64																						
-L- 109+38	65																							
-L- 110+55	66		1	1																				
-L-	66	67																						
-L- 111+05	68																							
-L- 122+53	69																							
-L- 129+19	70		1	1																				
-L-	70	71																						
-L- 130+00	72		1	1																				
-L-	72	73																						
-L- 131+50	74		1	1																				
-L-	74	75																						
-L- 134+00	76		1	1																				
-L-	76	77																						
SHEET TOTAL			19	19												2		2	4 @15"					

ABBREVIATIONS

C.B.	CATCH BASIN
N.D.I.	NARROW DROP INLET
D.I.	DROP INLET
M.D.I.	MEDIAN DROP INLET
M.D.I. (N.S.)	MEDIAN DROP INLET (NARROW SLOT)
J.B.	JUNCTION BOX
M.H.	MANHOLE
T.B.D.I.	TRAFFIC BEARING DROP INLET
T.B.J.B.	TRAFFIC BEARING JUCTION BOX
H.D.P.E.	HIGH DENSITY POLYETHYLENE

12-JAN-2007 08:35
r:\roadway\proj\r2245_rdy_sum.dgn
$$$$USERNAME$$$$

COMPUTED BY: B.C.F. DATE: 09/07/06
CHECKED BY: T.L.W. DATE: 01/03/07

PROJECT REFERENCE NO.	SHEET NO.
R-2245	3-C

STATE OF NORTH CAROLINA
DIVISION OF HIGHWAYS

LIST OF PIPES, ENDWALLS, ETC. (FOR PIPES 48" & UNDER)

STATION / SIZE / THICKNESS OR GAUGE	LOCATION (LT,RT, OR CL)	STRUCTURE NO. FROM	STRUCTURE NO. TO	TOP ELEVATION	INVERT ELEVATION	INVERT ELEVATION	SLOPE CRITICAL	CLASS III R.C. PIPE (UNLESS NOTED OTHERWISE) * CLASS IV R.C. PIPE ** HDPE PIPE 12"	15"	18"	24"	30"	36"	42"	48"
-L- 137+00	CL	78		62.6'											
-L-		78	79		59.4'	55.6'			56						
-L- 140+00	CL	80		64.4'											
-L-		80	81		61.3'	57.3'			56						
-L- 143+50	CL	82		66.6'											
-L-		82	83		63.4'	60.0'			60						
-L- 145+00		83A			59.2'	59.9'									128
-L- 146+00	CL	84		68.0'											
-L-		84	85		64.8'	61.3'			52						
-L- 158+00	CL	86		64.7'											
-L-		86	87		61.5'	57.5'			60						
-L- 160+56	CL	88		64.0'											
-L-		88	89		60.8'	55.1'			60						
-L- 161+50		90			54.8'	52.4'									136
-L- 163+00	CL	91		64.6'											
-L-		91	92		61.4'	55.6'			64						
-L- 163+25	CL	93			56.8'	54.5'									132
-L- 165+35	CL	94													
-L- 165+41.77		95			55.5'	54.7'									144
-L- 167+00	CL	96		65.8'											
-L-		96	97		62.6'	59.4'			56						
-L- 175+00		98			59.5'	58.7'									128
-L- 177+00		99			59.1'	58.8'									128
-L- 179+00		100			59.0'	59.5'									128
-L- 181+00		101			58.3'	58.4'									128
-L- 189+50		101A			57.7'	57.6'								128	
-L- 192+00	CL	102		63.1'											
-L-		102	103		59.9'	58.0'			68						
-L- 196+50	CL	104		61.9'											
-L-		104	105		58.7'	57.1'			52						
-L- 198+30	CL	105A		61.5'											
-L-		105A	106		58.3'	56.2'			52						
-L-		105A	107		58.3'	58.9'			164						
-L- 200+00		107		62.0'											
-L- 200+50		108			53.1'	53.3'									132
-L- 202+00		109			52.7'	52.8'									136
-L- 204+00		110			53.2'	53.1'									136
-L- 206+00		111			53.3'	53.1'									132
-L- 208+00		112			53.3'	53.5'									128
-L- 210+00		113			52.7'	52.5'									128
-L- 212+00		114			52.2'	52.2'									128
-L- 214+00		115			51.7'	51.5'									128
-L- 216+00		116			51.4'	51.1'									128
-L-		117	118		53.6'	55.7'			52						
SHEET TOTAL									852					128	2,228

STATION	STRUCTURE NO.	BITUMINOUS COATED C.S. PIPE TYPE B (UNLESS NOTED OTHRWISE) 12" .064	15" .064	18" .064	24" .064	30" .079	36" .079	42" .109	48" .109	15" SIDE DRAIN PIPE	18" SIDE DRAIN PIPE	24" SIDE DRAIN PIPE	ENDWALLS STD. 838.01, STD. 838.11 OR STD. 838.80 (UNLESS NOTED OTHERWISE) CU. YDS. R.C.P.	C.S.P.	QUANTITIES FOR DRAINAGE STRUCTURES PER EACH (0' THRU 5.0')	* TOTAL L.F. FOR PAY QUANTITY SHALL BE COL. 'A' + (1.3 X COL.'B') LIN. *FT. A 5.0' THRU 10.0'	B 10.0' AND ABOVE	C.B. STD. 840.01 OR STD. 840.02	FRAME, GRATES AND HOOD STANDARD 840.03 TYPE OF GRATE E	F	G
-L- 137+00	78														1						
-L-	78-79																				
-L- 140+00	80														1						
-L-	80-81																				
-L- 143+50	82														1						
-L-	82-83																				
-L- 145+00	83A																				
-L- 146+00	84														1						
-L-	84-85																				
-L- 158+00	86														1						
-L-	86-87																				
-L- 160+56	88														1						
-L-	88-89																				
-L- 161+50	90																				
-L- 163+00	91														1						
-L-	91-92																				
-L- 163+25	93																				
-L- 165+35	94																				
-L- 165+41.77	95																				
-L- 167+00	96														1						
-L-	96-97																				
-L- 175+00	98																				
-L- 177+00	99																				
-L- 179+00	100																				
-L- 181+00	101																				
-L- 189+50	101A																				
-L- 192+00	102														1						
-L-	102-103																				
-L- 196+50	104														1						
-L-	104-105																				
-L- 198+30	105A														1						
-L-	105A-106																				
-L-	105A-107																				
-L- 200+00	107														1						
-L- 200+50	108																				
-L- 202+00	109																				
-L- 204+00	110																				
-L- 206+00	111																				
-L- 208+00	112																				
-L- 210+00	113																				
-L- 212+00	114																				
-L- 214+00	115																				
-L- 216+00	116																				
-L-	117-118																				
SHEET TOTAL															12						

STATION	STRUCTURE NO.	D.I. STD. 840.14 OR STD. 840.15	D.I. FRAME & GRATE STD. 840.16	M.D.I. TYPE "A" STD. 840.17 OR 840.26	M.D.I. TYPE "B" STD. 840.18 OR 840.27	M.D.I. TYPE "D" STD. 840.19 OR 840.28	M.D.I. FRAME WITH GRATE STD. 840.22	M.D.I. FRAME WITH TWO GRATES STD. 840.22	M.D.I. (N.S.) FRAME WITH GRATE STD. 840.24	M.D.I. (N.S.) FRAME WITH TWO GRATES STD. 840.29	J.B. STD. 840.31 OR 840.32	T.B.D.I. STD. 840.35	T.B.D.I. FRAME WITH GRATE STD. 840.37	C.B. STD. 840.04 OR 840.05	M.H. FRAME & COVER STD. 840.54	SPLITTER BOX SEE DETAIL 2-K	T.B.J.B. STD. 840.34	HDPE ELBOWS NO. & SIZE	TRAFFIC BEARING SPLITTER BOX SEE DETAIL SHEET 2-L	PREFORMED SCOUR HOLE SEE DRAINAGE DETAIL 4	CONC. & BRICK PIPE PLUG, C.Y. STD. 840.71	PIPE REMOVAL LIN.FT.	REMARKS
-L- 137+00	78	1	1																				
-L-	78-79																						
-L- 140+00	80	1	1																				
-L-	80-81																						
-L- 143+50	82	1	1																				
-L-	82-83																						
-L- 145+00	83A																						
-L- 146+00	84	1	1																				
-L-	84-85																						
-L- 158+00	86	1	1																				
-L-	86-87																						
-L- 160+56	88	1	1																				
-L-	88-89																						
-L- 161+50	90																						
-L- 163+00	91	1	1																				
-L-	91-92																						
-L- 163+25	93																						
-L- 165+35	94																					46	24" CMP
-L- 165+41.77	95																						
-L- 167+00	96	1	1																				
-L-	96-97																						
-L- 175+00	98																						
-L- 177+00	99																						
-L- 179+00	100																						
-L- 181+00	101																						
-L- 189+50	101A																						
-L- 192+00	102	1	1																				
-L-	102-103																						
-L- 196+50	104									1		1											
-L-	104-105																						
-L- 198+30	105A	1	1																				
-L-	105A-106																						
-L-	105A-107																						
-L- 200+00	107	1	1																				
-L- 200+50	108																						
-L- 202+00	109																						
-L- 204+00	110																						
-L- 206+00	111																						
-L- 208+00	112																						
-L- 210+00	113																						
-L- 212+00	114																						
-L- 214+00	115																						
-L- 216+00	116																						
-L-	117-118																						
SHEET TOTAL		11	11							1		1										46	

ABBREVIATIONS

C.B.	CATCH BASIN
N.D.I.	NARROW DROP INLET
D.I.	DROP INLET
M.D.I.	MEDIAN DROP INLET
M.D.I. (N.S.)	MEDIAN DROP INLET (NARROW SLOT)
J.B.	JUNCTION BOX
M.H.	MANHOLE
T.B.D.I.	TRAFFIC BEARING DROP INLET
T.B.J.B.	TRAFFIC BEARING JUCTION BOX
H.D.P.E.	HIGH DENSITY POLYETHYLENE

6/20/00

12-JAN-2007 08:35
r:\roadway\proj\r2245_rdy_sum.dgn
$$$$USERNAME$$$$

COMPUTED BY: B.C.F. DATE: 09/07/06
CHECKED BY: T.L.W. DATE: 01/03/07

STATE OF NORTH CAROLINA
DIVISION OF HIGHWAYS

PROJECT REFERENCE NO.	SHEET NO.
R-2245	3-D

LIST OF PIPES, ENDWALLS, ETC. (FOR PIPES 48" & UNDER)

STATION / SIZE / THICKNESS OR GAUGE	LOCATION (LT, RT, OR CL)	STRUCTURE NO. FROM	STRUCTURE NO. TO	TOP ELEVATION	INVERT ELEVATION	INVERT ELEVATION	SLOPE CRITICAL	CLASS III R.C. PIPE (UNLESS NOTED OTHERWISE) * CLASS IV R.C. PIPE ** HDPE PIPE 12"	15"	18"	24"	30"	36"	42"	48"
-L- 222+25	CL	118		58.8'											
-L-		119	120		54.6'	55.6'			52						
-L- 223+00	CL	120		58.8'											
-L-		121	122		53.7'	55.9'			52						
-L- 224+00	CL	122		59.1'											
-L- 226+00		123		59.7'											
-L-		123	124		56.5'	54.7'			48						
-L- 231+50		125			50.7'	49.6'									128
-L- 233+00	CL	126		59.2'											
-L-		126	127		56.0'	55.0'	X		196						
-L- 235+00	CL	127		58.8'											
-L-		127	128		55.0'	51.7'			56						
-L- 235+35		129			50.0'	49.3'									132
-L-		130	131		51.7'	55.4'			56						
-L- 236+01.58	CL	131		58.5'											
-L-		132	133		51.1'	55.4'			60						
-L- 236+50	CL	133		58.6'											
-L-		134	135		50.7'	55.3'			56						
-L- 241+00	CL	135		58.4'											
-L-		136	137		50.5'	54.3'			56						
-L- 241+64	CL	137		57.5'											
-L- 246+50	CL	138		47.7'											
-L-		138	139		44.6'	43.8'			68						
-L- 247+25	CL	139		47.0'											
-L-		139	140		43.8'	43.6'			44						
-L- 247+75	CL	140		46.9'											
-L-		140	141		43.6'	42.2'			52						
-L- 248+24.39		142			42.3'	42.9'				140					
-L- & -Y7-		143													
-Y7-		144	146		41.9'	42.1'	X		92						
-Y7- 16+20		145													
-Y7- 16+92.50	LT.	146		44.4'											
-Y7-		146	148		42.1'	42.3'	X		96						
-Y7- 17+37		147													
-Y7- 17+91	LT.	148		44.5'											
-Y7- & -Y8-		148	149		42.3'	42.4'	X		28						
-Y8- 10+93	LT.	149		44.3'											
-Y8-		149	150		42.4'	42.5'	X		56						
-Y8- 11+54	LT.	150		44.4'											
-Y8-		150	152		42.5'	42.7'	X		48						
-Y8- 11+68		151													
-Y7- 11+46		153													
-Y7- 25+60		154													
-Y8- 15+39		156													
-Y7- 21+80	LT.	163													
SHEET TOTAL									1,116	140					260
PROJECT TOTAL									4,780	392	176			1,392	2,920
								20	** 144						

STATION	BITUMINOUS COATED C.S. PIPE TYPE B (UNLESS NOTED OTHRWISE) 12" .064	15" .064	18" .064	24" .064	30" .079	36" .079	42" .109	48" .109	15" SIDE DRAIN PIPE	18" SIDE DRAIN PIPE	24" SIDE DRAIN PIPE	ENDWALLS STD. 838.01, STD. 838.11 OR STD. 838.80 (UNLESS NOTED OTHERWISE) CU. YDS. R.C.P.	C.S.P.	QUANTITIES FOR DRAINAGE STRUCTURES PER EACH (0' THRU 5.0')	* TOTAL L.F. FOR PAY QUANTITY SHALL BE COL. 'A' + (1.3 X COL.'B') LIN. *FT. A 5.0' THRU 10.0'	B 10.0' AND ABOVE	C.B. STD. 840.01 OR STD. 840.02	FRAME, GRATES AND HOOD STANDARD 840.03 TYPE OF GRATE E	F	G
-L- 222+25														1						
-L-																				
-L- 223+00														1						
-L-																				
-L- 224+00														1						
-L- 226+00														1						
-L-																				
-L- 231+50																				
-L- 233+00														1						
-L-																				
-L- 235+00														1						
-L-																				
-L- 235+35																				
-L-																				
-L- 236+01.58														1						
-L-																				
-L- 236+50														1						
-L-																				
-L- 241+00														1						
-L-																				
-L- 241+64														1						
-L- 246+50														1						
-L-																				
-L- 247+25														1						
-L-																				
-L- 247+75														1						
-L-																				
-L- 248+24.39																				
-L- & -Y7-																				
-Y7-																				
-Y7- 16+20																				
-Y7- 16+92.50														1						
-Y7-																				
-Y7- 17+37																				
-Y7- 17+91														1						
-Y7- & -Y8-																				
-Y8- 10+93														1						
-Y8-																				
-Y8- 11+54														1						
-Y8-																				
-Y8- 11+68																				
-Y7- 11+46												3.4								
-Y7- 25+60										32										
-Y8- 15+39										36										
-Y7- 21+80																				
SHEET TOTAL										68		3.4		17						
PROJECT TOTAL									84	68		24.4		72			1		1	

STATION	D.I. STD. 840.14 OR STD. 840.15	D.I. FRAME & GRATE STD. 840.16	M.D.I. TYPE "A" STD. 840.17 OR 840.26	M.D.I. TYPE "B" STD. 840.18 OR 840.27	M.D.I. TYPE "D" STD. 840.19 OR 840.28	M.D.I. FRAME WITH GRATE STD. 840.22	M.D.I. FRAME WITH TWO GRATES STD. 840.22	M.D.I. (N.S.) FRAME WITH GRATE STD. 840.24	M.D.I. (N.S.) FRAME WITH TWO GRATES STD. 840.29	J.B. STD. 840.31 OR 840.32	T.B.D.I. STD. 840.35	T.B.D.I. FRAME WITH GRATE STD. 840.37	C.B. STD. 840.04 OR 840.05	M.H. FRAME & COVER STD. 840.54	SPLITTER BOX SEE DETAIL 2-K	T.B.J.B. STD. 840.34	HDPE ELBOWS NO. & SIZE	TRAFFIC BEARING SPLITTER BOX SEE DETAIL SHEET 2-L	PREFORMED SCOUR HOLE SEE DRAINAGE DETAIL 4	CONC. & BRICK PIPE PLUG, C.Y. STD. 840.71	PIPE REMOVAL LIN.FT.	REMARKS
-L- 222+25	1	1																				
-L-																						
-L- 223+00	1	1																				
-L-																						
-L- 224+00	1	1																				
-L- 226+00	1	1																				
-L-																						
-L- 231+50																						
-L- 233+00	1	1																				
-L-																						
-L- 235+00	1	1																				
-L-																						
-L- 235+35																						
-L-																						
-L- 236+01.58	1	1																				
-L-																						
-L- 236+50	1	1																				
-L-																						
-L- 241+00	1	1																				
-L-																						
-L- 241+64	1	1																				
-L- 246+50	1	1																				
-L-																						
-L- 247+25	1	1																				
-L-																						
-L- 247+75	1	1																				
-L-																						
-L- 248+24.39																						
-L- & -Y7-																					37	18" CONC.
-Y7-																						
-Y7- 16+20																					63	15" CONC.
-Y7- 16+92.50				1					1													
-Y7-																						
-Y7- 17+37																					65	15" CONC.
-Y7- 17+91				1					1													
-Y7- & -Y8-																						
-Y8- 10+93				1					1													
-Y8-																						
-Y8- 11+54				1					1													
-Y8-																						
-Y8- 11+68																					51	18" CONC.
-Y7- 11+46																						
-Y7- 25+60																					35	18" CONC.
-Y8- 15+39																					24	18" CONC.
-Y7- 21+80																					51	18" CMP
SHEET TOTAL	13	13		4					4												326	
PROJECT TOTAL	44	44		4					22		18			7	1	3	6 @15"	1	1		372	

ABBREVIATIONS

C.B.	CATCH BASIN
N.D.I.	NARROW DROP INLET
D.I.	DROP INLET
M.D.I.	MEDIAN DROP INLET
M.D.I. (N.S.)	MEDIAN DROP INLET (NARROW SLOT)
J.B.	JUNCTION BOX
M.H.	MANHOLE
T.B.D.I.	TRAFFIC BEARING DROP INLET
T.B.J.B.	TRAFFIC BEARING JUCTION BOX
H.D.P.E.	HIGH DENSITY POLYETHYLENE

6/20/00

26-JAN-2007 09:53
r:\roadway\proj\r2245_rdy_sum.dgn
$$$$USERNAME$$$$

6/21/00

COMPUTED BY:	B.C.F.	DATE:	09/07/06
CHECKED BY:	T.L.W.	DATE:	01/03/07

STATE OF NORTH CAROLINA
DIVISION OF HIGHWAYS

PROJECT REFERENCE NO.	SHEET NO.
R-2245	3-E

LIST OF PIPES, ENDWALLS, ETC. (FOR PIPES 54" & OVER)

STATION / SIZE / THICKNESS OR GAUGE	LOCATION (LT,RT, OR CL)	STRUCTURE NO. FROM	STRUCTURE NO. TO	TOP ELEVATION	INVERT ELEVATION	INVERT ELEVATION	SLOPE CRITICAL	CLASS III R.C. PIPE (UNLESS NOTED OTHERWISE) 54"	60"	66"	72"	78"	84"
-L- 24+60	RT	168											
-L- 94+28		52			25.8′	26.2′			368				
-L- 147+00	CL	157		68.8′									
-L- 147+00		157A	157		61.3′	61.4′							
-L- 147+00		157	157B		61.4′	60.8′							
-L- 147+25	CL	158		68.8′									
-L- 147+25		158A	158		61.8′	61.5′							
-L- 147+25		158	158B		61.5′	61.1′							
-L- 147+50	CL	159		68.9′									
-L- 147+50		159A	159		61.7′	61.5′							
-L- 147+50		159	159B		61.5′	61.3′							
-L- 147+75	CL	160		68.9′									
-L- 147+75		160A	160		61.7′	61.6′							
-L- 147+75		160	160B		61.6′	61.5′							
-L- 148+00	CL	161		68.9′									
-L- 148+00		161A	161		61.7′	61.7′							
-L- 148+00		161	161B		61.7′	61.6′							
-ACC3- 11+32		164			58.2′	58.5′							
-ACC3- 12+06		165			58.7′	58.8′							
-ACC3- 12+80		166			58.4′	59.0′							
-ACC3- 13+54		167			58.8′	58.9′							
-Y7- 23+99		162						54					
SHEET TOTAL								54	368				
PROJECT TOTAL								54	368				

BITUMINOUS COATED C.S. PIPE TYPE B 54" .109	54" .138	54" .168	54" SHOP ELON-GATED .138	54" SHOP ELON-GATED .168	60" .138	60" .168	66" .138	66" .168	72" .138	72" .168	STRUCTURAL PLATE PIPE 60" 12	60" 10	66" 12	66" 10	72" 12	72" 10

STATION	REINFORCED ENDWALLS WITH R.C. – C.Y.	REINFORCED ENDWALLS WITH C.S. – C.Y.	MASONARY DRAINAGE STRUCTURES CUBIC YARDS M.D.I. TYPE "A" STD. 840.17 OR 840.26	M.D.I. FRAME WITH TWO GRATES STD. 840.22	60" X 46" COR. ALUMINUM PIPE ARCH. THICKNESS 0.109"	51" X 30" STORM CHAMBER SEE DETAIL SHEET 2-L	REINF. CONC. FLARED END SECTIONS NO. & SIZE	CORR. STEEL FLARED END SECTIONS NO. & SIZE	REINF. CONC. ELBOWS NO. & SIZE	CORR. STEEL ELBOWS NO. & SIZE	CONC. COLLARS CL. "B" C.Y. STD 840.72	PIPE REMOVAL LIN.FT.	REMARKS
-L- 24+60						170.8							
-L- 94+28	7.9												2 PIPES @ 60"
-L- 147+00			4.478	1									
-L- 147+00					64								
-L- 147+00					64								
-L- 147+25			4.478	1									
-L- 147+25					64								
-L- 147+25					64								
-L- 147+50			4.478	1									
-L- 147+50					64								
-L- 147+50					64								
-L- 147+75			4.478	1									
-L- 147+75					64								
-L- 147+75					64								
-L- 148+00			4.478	1									
-L- 148+00					64								
-L- 148+00					64								
-ACC3- 11+32					92								
-ACC3- 12+06					92								
-ACC3- 12+80					92								
-ACC3- 13+54					92								
-Y7- 23+99													TEMPORARY PIPE EXTENSION FOR CULVERT CONSTRUCTION
SHEET TOTAL	7.9		22.39	5	1,008	170.8							
PROJECT TOTAL	7.9		23	5	1,008	170.8							

ABBREVIATIONS

C.B.	CATCH BASIN
N.D.I.	NARROW DROP INLET
D.I.	DROP INLET
M.D.I.	MEDIAN DROP INLET
M.D.I. (N.S.)	MEDIAN DROP INLET (NARROW SLOT)
J.B.	JUNCTION BOX
M.H.	MANHOLE
T.B.D.I.	TRAFFIC BEARING DROP INLET
T.B.J.B.	TRAFFIC BEARING JUCTION BOX

26-JAN-2007 09:53
r:\roadway\proj\r2245_rdy_sum.dgn
$$$$USERNAME$$$$

COMPUTED BY: B.C.F. DATE: 05/05
CHECKED BY: T.L.W. DATE: 05/06

PROJECT REFERENCE NO.	SHEET NO.
R-2245	3-F

STATE OF NORTH CAROLINA
DIVISION OF HIGHWAYS

"N" = DISTANCE FROM EDGE OF LANE TO FACE OF GUARDRAIL.
TOTAL SHOULDER WIDTH = DISTANCE FROM EDGE OF TRAVEL LANE TO SHOULDER BREAK POINT.
FLARE LENGTH = DISTANCE FROM LAST SECTION OF PARALLEL GUARDRAIL TO END OF GUARDRAIL.
W = TOTAL WIDTH OF FLARE FROM BEGINNING OF TAPER TO END OF GUARDRAIL.
G = GATING IMPACT ATTENUATOR TYPE 350
NG = NON-GATING IMPACT ATTENUATOR TYPE 350

GUARDRAIL SUMMARY

SURVEY LINE	BEG. STA.	END STA.	LOCATION	LENGTH				WARRANT POINT		"N" DIST. FROM E.O.L.	TOTAL SHOULDER WIDTH	FLARE LENGTH		W		ANCHORS					TEMPORARY ANCHORS				IMPACT ATTENUATOR TYPE 350				REMARKS
				PERMANENT STRAIGHT	SHOP CURVED	TEMPORARY STRAIGHT	TEMPORARY SHOP CURVED	APPROACH END	TRAILING END			APPROACH END	TRAILING END	APPROACH END	TRAILING END	GRAU 350	AT-1	TYPE-111			GRAU 350	AT-1			NO.	PERMITTED G	PERMITTED NG		
-L-	15+72.69	20+66.44	RT	493.75				16+50.00	20+66.44	8	11	50		1		1		1											
-L-	15+97.69	20+66.44	LT	468.75				20+66.44	16+50.00	8	11		50		1	1		1											
-L-	22+33.56	23+14.81	RT	81.25				22+33.56		8	11		50		1	1		1											
-L-	22+33.56	24+27.31	LT	193.75					22+33.56	8	11	50		1		1		1											
-L-	47+41.25	53+10.00	LT	568.75				48+50.00	53+10.00	8	11	50		1		1		1											
-L-	47+16.25	53+10.00	RT	593.75				53+10.00	48+50.00	8	11		50		1	1		1											
-L-	62+90.00	65+71.25	RT	281.25				62+90.00	64+50.00	8	11		50		1	1		1											
-L-	62+90.00	66+46.25	LT	356.25				63+50.00	62+90.00	8	11	50		1		1		1											
-Y7-	22+19.25	25+56.75	RT	337.50				23+93.27	24+03.27	8	11	50	50	1	1	2													RESET GUARDRAIL TO FINAL ELEVATION & LOCATION
-Y7-	23+61.76	25+11.76	LT	150.00	61.76			24+02.24	23+92.24	8	11	50	6.25	1		1	1												
			SUBTOTAL:	3525.00	61.76																								
			LESS ANCHORS:	-700	-6.25																								
		TOTAL:		2825.00	55.51											11	1	8											
		SAY:		2850.00	62.50											11	1	8											
		(10 ADDITIONAL GUARDRAIL POSTS)																											

ANCHOR DEDUCTIONS:

GRAU-350	11 @	50.00	=	-550
TYPE-111	8 @	18.75	=	-150
AT-1	1 @	6.25	=	-6.25

6/16/99

22-JAN-2007 15:12
r:\roadway\proj\r2245_rdy_sum.dgn
$$$$USERNAME$$$$

PROJECT REFERENCE NO.	SHEET NO.
R-2245	3-G

SUMMARY OF 48" WOVEN WIRE FENCE

STATION TO STATION	LOCATION	LENGTH (ft)
-L- 63+04.00 TO -L- 109+65.95	LT	4,785.91
-L- 63+02.50 TO -L- 72+89.26	RT	1,024.06
-L- 73+10.74 TO -L- 81+05.08	RT	804.62
-L- 81+11.73 TO -L- 94+88.18	RT	1,397.06
-L- 95+00.66 TO -L- 122+50.00	RT	2,724.33
-L- 109+71.94 TO -L- 123+28.69	LT	1,365.00
-L- 122+66.00 TO -L- 184+92.00	RT	6,201.70
-L- 123+36.83 TO -L- 190+77.00	LT	6,767.56
-L- 185+08.00 TO -ACC3- 17+50.00	RT	1,337.49
-ACC3- 17+50.00 TO -Y7- 21+63.90	LT/RT	6,386.29
-L- 190+93.00 TO -L- 241+38.00	LT	5,006.55
-L- 241+54.00 TO -Y7- 14+80.00	LT/RT	906.53
-Y7- 12+00.00 TO -Y7- 14+30.00	RT	230.00
-Y7- 12+00.00 TO -Y7- 15+20.84	LT	355.47
-Y7- 22+13.86 TO -Y7- 26+35.00	RT	421.14
-Y7- 23+00.00 TO -Y8- 13+80.00	LT/RT	683.44
-Y7- 23+60.00 TO -Y7- 25+30.00	LT	170.00
	TOTAL:	40,567.15
	SAY:	40,600

ADDITIONAL BARBED WIRE = 100'

SUMMARY OF 48" CHAIN LINK FENCE

STATION TO STATION	LOCATION	LENGTH (ft)
-L- 46+65.00 TO -L- 53+79.86	RT	836.49
-L- 46+77.00 TO -L- 52+45.00	RT	675.92
-L- 46+65.00 TO -L- 53+55.47	LT	812.04
-L- 46+77.00 TO -L- 52+45.00	LT	675.92
-Y6- 11+48.08 TO -L- 56+30.00	LT	275.53
-Y6- 11+60.06 TO -L- 56+50.00	RT	355.67
	TOTAL:	3,631.58
	SAY:	3,700

REMOVAL OF EXISTING ASPHALT PAVEMENT

STATION TO STATION	LOCATION	AREA (SQ. YDS.)
-L- 20+31.44 TO -L- 20+77.88	LT/RT	97.86
-L- 22+31.32 TO -L- 24+81.50	LT/RT	554.64
-L- 32+00.00 TO -L- 43+50.00	LT/RT	2,568.01
-Y7DET- 21+23.49 TO -Y7DET- 27+44.71	LT/RT	1,203.95
PER GEOTECH REC'S 5/2/05		250
-L- 53+10.00 TO -L- 53+85.00	LT/RT	182.64
	TOTAL:	4,857.10
	SAY:	4,900

BREAKING OF EXISTING ASPHALT PAVEMENT

STATION TO STATION	LOCATION	AREA (SQ. YDS.)
-L- 16+00.00 TO -L- 20+31.44	LT/RT	956.60
-L- 43+50.00 TO -L- 53+10.00	LT/RT	2,110.30
	TOTAL:	3,066.90
	SAY:	3,100

SUMMARY OF MILLING OF EXISTING ASPHALT PAVEMENT

STATION TO STATION	LOCATION	AREA (SQ. YDS.)
-L- 10+45.00 TO -L- 14+25.00	LT/RT	838.76
-L- 24+81.50 TO -L- 27+00.00	LT/RT	486.59
	TOTAL:	1,325.35
	SAY:	1,330

SUMMARY OF SHOULDER BERM GUTTER

STATION TO STATION	LOCATION	LINEAR FEET
-L- 22+57.56 TO -L- 23+69.75	LT	112.19
-L- 47+95.25 TO -L- 52+86.00	LT	490.75
-L- 47+95.25 TO -L- 52+86.00	RT	490.75
-L- 63+14.00 TO -L- 65+94.75	LT	283.18
-L- 63+14.00 TO -L- 65+19.75	RT	205.78
	TOTAL:	1,582.65
	SAY:	1,600

22-JAN-2007 16:02
r:\proj\r2245_rdy_sum.dgn
$$$$USERNAME$$$$

STATE OF NORTH CAROLINA
DIVISION OF HIGHWAYS

SUMMARY OF EARTHWORK

IN CUBIC YARDS

LOCATION	UNCL. EXCAVATION	UNDERCUT	EMBT+%	BORROW	WASTE
-L- LT. STA. 10+12.45 TO STA. 16+00.00	170	0	19	0	151
-L- RT. STA. 10+12.45 TO STA. 16+00.00	158	0	2	0	156
-Y1- STA. 10+00.00 TO STA. 13+00.00	109	0	0	0	109
-Y2- STA. 11+00.00 TO STA. 12+80.00	51	0	0	0	51
-Y3- STA. 11+00.00 TO STA. 11+98.26	19	0	0	0	19
-L- STA. 16+00.00 TO STA. 20+66.44 (BEGIN BRIDGE)	152	0	3,589	3,437	0
SUBTOTAL:	659	0	3,610	3,437	486
-L- STA. 22+33.56 (END BRIDGE) TO STA. 23+00.00	15	0	201	186	0
-L- LT. STA. 23+00.00 TO STA. 32+00.00	82	0	27	0	55
-L- RT. STA. 22+50.00 TO STA. 32+00.00	397	0	165	0	232
-L- STA. 32+00.00 TO STA. 53+10.00 (BEGIN BRIDGE)	934	0	117,134	116,200	0
-Y4- STA. 10+50.00 TO STA. 11+63.54	26	0	0	0	26
-Y5- STA. 11+20.00 TO STA. 17+21.27	88	0	146	58	0
SUBTOTAL:	1,542	0	117,673	116,444	313
-L- STA. 62+90.00 (END BRIDGE) TO STA. 93+00.00	363	1,365	108,398	108,035	1,365
-DRIVE- 10+32.75 TO 12+00.00	0	0	1,226	1,226	0
SUBTOTAL:	363	1,365	109,624	109,261	1,365
-L- STA. 93+00.00 TO STA. 123+00.00	0	1,775	65,619	65,619	1,775
SUBTOTAL:	0	1,775	65,619	65,619	1,775
-L- STA. 123+00.00 TO STA. 153+00.00	0	0	67,923	67,923	0
SUBTOTAL:	0	0	67,923	67,923	0
-L- STA. 153+00.00 TO STA. 183+00.00	0	6,910	100,253	100,253	6,910
SUBTOTAL:	0	6,910	100,253	100,253	6,910
-L- STA. 183+00.00 TO STA. 213+00.00	0	27,160	110,703	110,703	27,160
-ACC3- 10+32.84 TO 14+16.57	0	0	7,706	7,706	0
SUBTOTAL:	0	27,160	118,409	108,409	27,160
-L- STA. 213+00.00 TO STA. 248+47.46	398	4,967	93,397	92,999	4,967
SUBTOTAL:	398	4,967	93,397	92,999	4,967
-Y7DET- STA. 19+00.00 TO STA. 27+50.00	502	0	1,814	1,312	0
-Y7- STA. 10+00.00 TO STA. 28+00.00	1,486	0	2,050	564	0
-Y8- STA. 11+92.29 TO STA. 16+50.00	409	0	279	0	130
-Y8REV- STA. 10+24.08 TO STA. 11+89.61	54	0	296	242	0
SUBTOTAL:	2,451	0	4,439	2,118	130
PROJECT SUBTOTAL:	5,413	42,177	680,949	676,463	43,106
WASTE IN LIEU OF BORROW				-929	-929
ADDITIONAL UNDERCUT	0	1,000	1,250	1,250	1,000
LOSS DUE TO CLEARING & GRUBBING	-800			800	
ESTIMATED SHOULDER MATERIAL			14,750	14,750	
PROJECT TOTAL:	4,613	43,177	696,949	692,334	43,177
SELECT MATERIAL IN LIEU OF BORROW				-53,971	
ESTIMATED 5% TO REPLACE TOPSOIL IN BORROW PIT				31,918	
GRAND TOTAL:	4,613	43,177	696,949	670,281	43,177
SAY:	4,700	43,177		670,500	

DDE = 5,293 cu.yds.

Note: "Quantities are approximate only. The Resident Engineer will re-cross-section the work accurately when the project is staked out. These cross-section notes will be used in computing the final quantities for which the contractor will be paid."

"Earthwork quantities are calculated by the Roadway Design Unit. These earthwork quantities are based in part on subsurface data provided by the Geotechnical Engineering Unit."

PROJECT REFERENCE NO. R-2245

SHEET NO. 3-H

PROJ. REFERENCE NO.	SHEET NO.
R-2245	3-I

STATE OF NORTH CAROLINA
DIVISION OF HIGHWAYS

PARCEL INDEX SHEET

PARCEL No.	SHEET No.	PROPERTY OWNER NAME
1	4	GINGER GRAVELL
2	4	KAREN K. HARRIS
3	4	GERALD L. GOUGER
4	4	MICHAEL OXFORD
5	4	SEAHORSE VENTURES, LLC
6	4	TOWN OF OAK ISLAND
7	4	OAK ISLAND ELKS LODGE #2769
8	4	GAYLE S. FAUCETTE, etal
9	4	TOWN OF OAK ISLAND
10	4,5	GARY V. PETERSON
11	4,5	MARION C. DEETER
90	4,5	EMMETT C. GUNNERSON
13	5	JANE M. GOINS
20	5	MARVIN HERNDON, ETAL
24	5	ELLEN J. HERNDON
26	5	TOWN OF OAK ISLAND
27	5	TOWN OF OAK ISLAND
28	5	RUTH L. REAVIS
29	5	CARLENE K. HENDRIX
30	5	BETTY P. TILLMAN
31	5	JOSEPH O. HEAVNER, JR, etal
34	5	STEPHAN R. WEINLAND
35	5	CAM INVESTMENTS, INC
36	5	GARY L. KAILBOURNE
38	5,6	RONALD B. POSTON, TRUSTEE
39	5,6	GARY G. COOPER
40	6	HARMON H. JAMES, JR.
41	6	JOHN ROACH JAMES
42	6	ARTHUR SKIPPER
42A	6	KIMBERLY S. ANDERSON
44	6	BETTY Z. DOVER, ETAL
45	6	MARY W. CHURCH
46	6	JANET H. DENNIS
47	6	ROBERT WALSER, SR.
48	6	H. EMANUEL GHENT
49	6	MINDI W. SINK, ETAL
50	6	DENISE M. WEST
51	6	JOHN L. WALSER
52	6	CLARINE E. CLINE
53	6	WILLIAM B. WARRICK
53A	6	DAWN T. WARRICK
53B	6	DAWN T. WARRICK
54	6	NEIL G. JESTER
55	6	ANNE J. CONNER
56	6	ANNIE E. HAMPTON
57	6	CARL L. SMITH, ETUX
58	6	DONNA L. BROWN, ETALS
59	6	MARSHALL R. CARROLL
60	6	ROBERT W. CONNER
61	6	J. R. CORBETT
62	6	PAUL M. SAWYER
63	6	MARVIN C. MARTIN, SR.
64	6	RALPH A. DICKSON, III
66	6	FRANK LEE
67	6	PAUL E. MOORE, JR.
908	6	NCDOT (formerly-KATHERINE W. HICKS)
909	6	NCDOT (formerly-FREDA M. RICH)
910	6	NCDOT (formerly-DOUGLASS JOHNSON)
911	6	NCDOT (formerly-KEN BLACK)
71	6,7	GEORGE L. FISHER, ETAL

PARCEL No.	SHEET No.	PROPERTY OWNER NAME
907	6,7	NCDOT (formerly-DONALD W. BATCHELOR)
906	7	NCDOT (formerly-RANDY W. GOODNIGHT)
75	7	PHILLIP M. LEWIS
904	7	NCDOT (formerly-HENRY G. HARRIS)
903	7	NCDOT (formerly-BENNY E. PRINCE)
902	7	NCDOT (formerly-BARBARA S. BRUNSON)
905	7	NCDOT (formerly-JOHN McCONNELL)
77	7	THOMAS R. STANLEY
101	7	CHARLOTTE M. HAWTHORNE
80	7	RALPH DICKSON, III
901	7	NCDOT (formerly-CARL F. MICKEY, JR)
102	7	MICHAEL DENNIS
103	7	JAMES W. WRIGHT
104	8	MAS PROPERTIES,LLC
105	8,9	STATE OF NORTH CAROLINA
106	8 - 17	LaDANE WILLIAMSON
107	16 - 20,26	RESERVE DEVELOPMENT CO., LLC
109	17 - 23	SOUTH SHORE REAL ESTATE, LLC, et al
117	21	BRUNSWICK ELECTRIC MEM. CORP.
111	21,22	MDI MANAGEMENT, INC.
113	21,23	MIDWAY LANDING, LLC.
114	23	JAMES E. McCRACKEN, ET AL

PROJECT REFERENCE NO.	SHEET NO.
R-2245	4
R/W SHEET NO.	
ROADWAY DESIGN ENGINEER	HYDRAULICS ENGINEER

NORTH CAROLINA PROFESSIONAL SEAL 22924 ENGINEER GLENN W. MUMFORD 11/17/07

NORTH CAROLINA PROFESSIONAL SEAL 19775 ENGINEER RAY D. SUMFORD 22 JAN 07

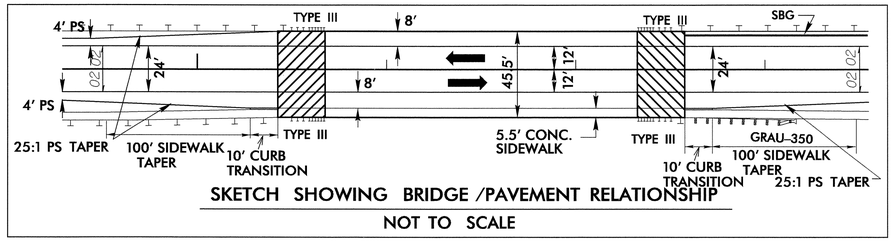

SKETCH SHOWING BRIDGE /PAVEMENT RELATIONSHIP

NOT TO SCALE

NAD 83

BEGIN TIP PROJECT R-2245
-L- POT Sta. 10+00.43 =
-Y1- POT Sta. 11+99.95

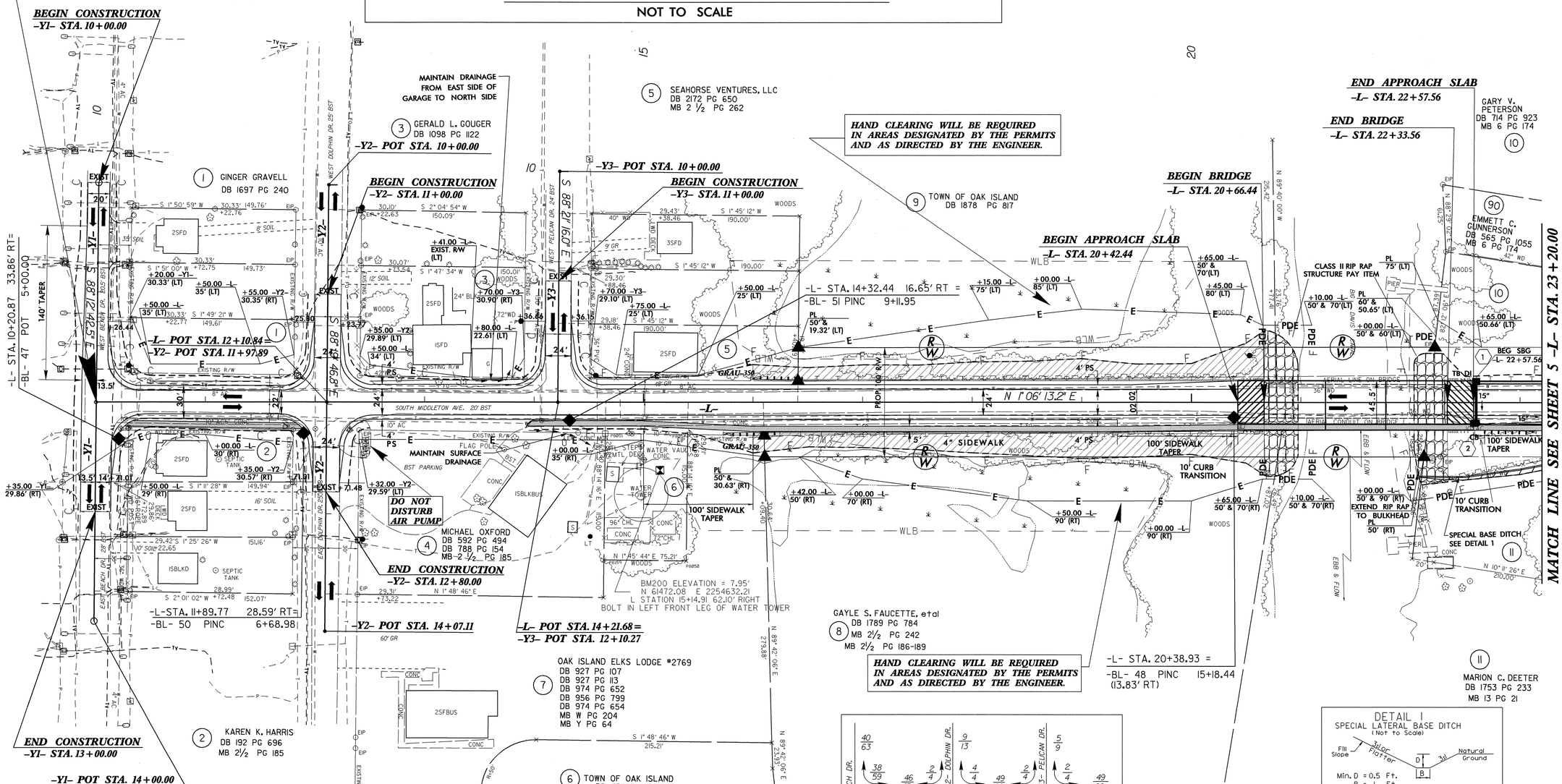

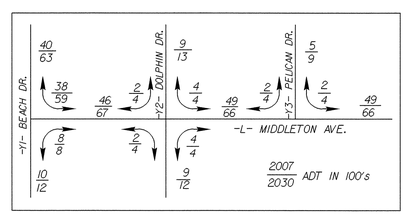

ROCK PLATING AND REINFORCED SLOPE SEE NOTES FOR STATIONS

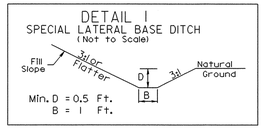

-L- STA 22+07 to 24+04 RT

NOTES:

1) FOR -L- PROFILE SEE SHEET 27.
2) FOR -Y1-, -Y2- AND -Y3- PROFILES SEE SHEET 36.
3) FOR STRUCTURE PLANS SEE SHEETS S-1 THROUGH S-25.
4) PAVED SHOULDER TAPERS ARE 8:1 UNLESS OTHERWISE NOTED.
5) -Y- LINE RADII ARE 30' UNLESS OTHERWISE NOTED.
6) FOR CURB TRANSITION SEE DETAIL SHEET 2-H.
7) FOR ROCK PLATING (-L- STA. 15+50.00 TO STA. 16+25.00 AND -L- STA. 20+25.00 TO STA. 20+66.44) SEE DETAIL SHEET 2-O.
8) FOR REINFORCED SLOPE (-L- STA. 16+25.00 TO STA. 20+25.00) SEE DETAIL SHEET 2-P.
9) MILL EXISTING ASPHALT PAVEMENT 2.5" FROM -L- STA. 10+45.00 TO STA. 14+25.00.

REVISIONS

8/17/99

22-JAN-2007 15:17
R:\roadway\proj\r-2245_rdy_psh04.dgn
$$$$USERNAME$$$$

PROJECT REFERENCE NO.	SHEET NO.
R-2245	5
R/W SHEET NO.	
ROADWAY DESIGN ENGINEER	HYDRAULICS ENGINEER

NORTH CAROLINA PROFESSIONAL SEAL 22924 ENGINEER GLENN W. MUMFORD 1/17/07

NORTH CAROLINA PROFESSIONAL SEAL 19775 ENGINEER RAY D. GOODWOOD 22 JAN 07

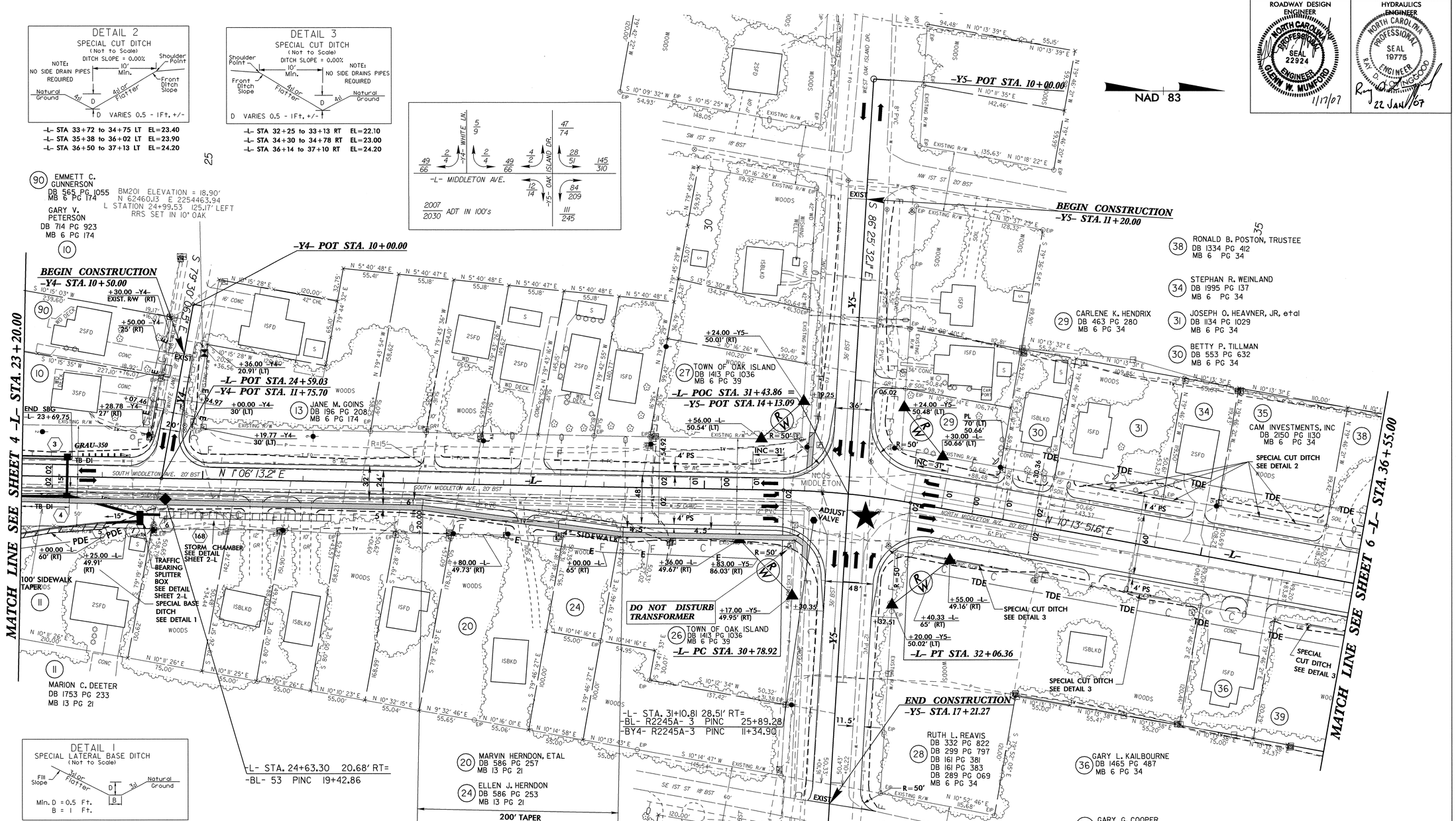

NOTES:

1) FOR -L- PROFILE SEE SHEETS 27 AND 28.
2) FOR -Y4- PROFILE SEE SHEET 36.
3) FOR -Y5- PROFILE SEE SHEET 37.
4) DRIVEWAY RADII ARE 10' UNLESS OTHERWISE NOTED.
5) PAVED SHOULDER TAPERS ARE 8:1 UNLESS OTHERWISE NOTED.
6) -Y- LINE RADII ARE 30' UNLESS OTHERWISE NOTED.
7) MILL EXISTING ASPHALT PAVEMENT 2.5" FROM -L- STA. 24+81.50 TO STA. 27+00.00.

REVISIONS

8/17/99

22-JAN-2007 14:04
r:\roadway\proj\r2245_rdy_psh05.dgn
$$$$USERNAME$$$$

PROJECT REFERENCE NO.	SHEET NO.
R-2245	6
R/W SHEET NO.	
ROADWAY DESIGN ENGINEER	HYDRAULICS ENGINEER

NORTH CAROLINA PROFESSIONAL SEAL 22924 ENGINEER GLENN W. MUMFORD 1/17/07

NORTH CAROLINA PROFESSIONAL SEAL 19776 ENGINEER RAY D. LYNGGOOD 19 JAN 07

REVISIONS

8/17/99

DETAIL 4
PREFORMED SCOUR HOLE

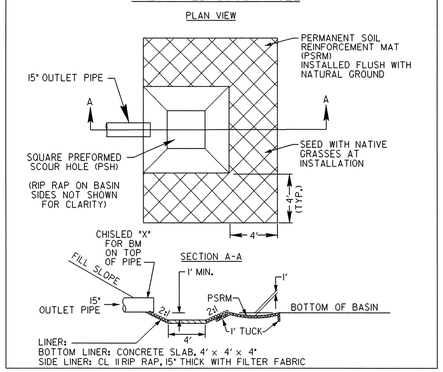

DETAIL 5
INFILTRATION BASIN
(Not to Scale)

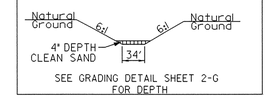

SEE GRADING DETAIL SHEET 2-G FOR DEPTH

EST. DDE: 1,005 CU. YDS.

DETAIL 6
INFILTRATION SWALE
(EAST & WEST)
(Not to Scale)

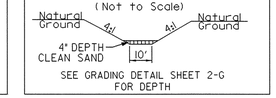

SEE GRADING DETAIL SHEET 2-G FOR DEPTH

EST. DDE. WEST: 2,460 CU. YDS.

NAD 83

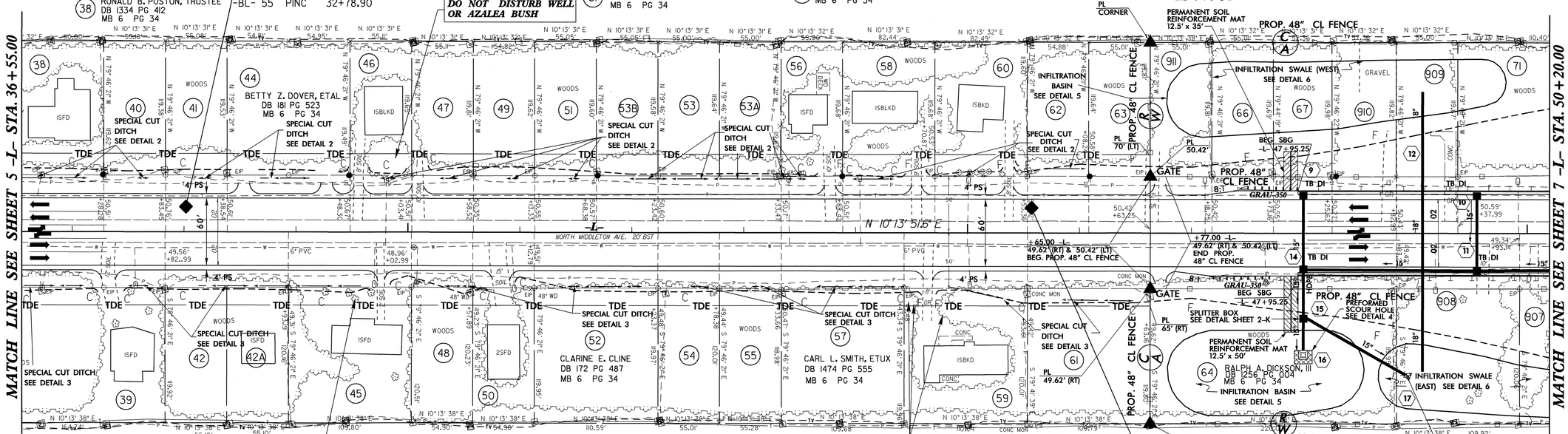

(41) JOHN ROACH JAMES
DB 1008 PG 591
MB 6 PG 34

(40) HARMON H. JAMES, JR.
DB 1008 PG 596
MB 6 PG 34

(38) RONALD B. POSTON, TRUSTEE
DB 1334 PG 412
MB 6 PG 34

(49) MINDI W. SINK, ETAL
DB 1484 PG 112
MB 6 PG 34

(47) ROBERT WALSER, SR.
DB 972 PG 965
MB 6 PG 34

(46) JANET H. DENNIS
DB 1274 PG 1103
MB 6 PG 34

(53A) DAWN T. WARRICK
DB 1658 PG 229
MB 6 PG 34

(53) WILLIAM B. WARRICK
DB 1658 PG 231
MB 6 PG 34

(53B) DAWN T. WARRICK
DB 1658 PG 227
MB 6 PG 34

(51) JOHN L. WALSER
DB 1077 PG 630
MB 6 PG 34

(58) DONNA L. BROWN, ETALS
DB 1926 PG 862
MB 6 PG 34

(56) ANNIE E. HAMPTON
DB 2072 PG 1133
MB 6 PG 34

(63) MARVIN C. MARTIN, SR.
DB 1390 PG 266
MB 6 PG 34

(62) PAUL M. SAWYER
DB 1789 PG 683
MB 6 PG 34

(60) ROBERT W. CONNER
DB 1986 PG 377
MB 6 PG 34

(67) PAUL E. MOORE, JR.
DB 1223 PG 689
MB 6 PG 34

(66) FRANK LEE
DB 817 PG 476
MB 6 PG 34

(911) NCDOT
(formerly-KEN BLACK)
(DB 1099 PG 823)
(MB 6 PG 34)

(71) GEORGE L. FISHER, ETAL
DB 1181 PG 593
MB 6 PG 34

(909) NCDOT
(formerly-FREDA M. RICH)
(DB 1580 PG 881)
(MB 6 PG 34)

(910) NCDOT
(formerly-DOUGLASS JOHNSON)
(DB 1561 PG 316)
(MB 6 PG 34)

(39) GARY G. COOPER
DB 1908 PG 1196
DB 2038 PG 992
MB 6 PG 34

(42) ARTHUR SKIPPER
DB 1999 PG 778
MB 6 PG 34

(42A) KIMBERLY S. ANDERSON
DB 1999 PG 775
MB 6 PG 34

DO NOT DISTURB TREE

(45) MARY W. CHURCH
DB 1174 PG 175
DB 1145 PG 381
MB 6 PG 34

(48) H. EMANUEL GHENT
DB 1249 PG 181
MB 6 PG 34

(50) DENISE M. WEST
DB 1830 PG 945
MB 6 PG 34

(54) NEIL G. JESTER
DB 2179 PG 693
MB 6 PG 34

(55) ANNE J. CONNER
DB 1008 PG 606
MB 6 PG 34

(59) MARSHALL R. CARROLL
DB 1895 PG 1128
MB 6 PG 34

(61) J. R. CORBETT
DB 596 PG 210
DB 596 PG 212
MB 6 PG 34

(908) NCDOT
(formerly-KATHERINE W. HICKS)
DB 169 PG 55
MB 6 PG 34

(907) NCDOT
(formerly-DONALD W. BATCHELOR)
DB 836 PG 759
MB 6 PG 34

DETAIL 2
SPECIAL CUT DITCH
(Not to Scale)
DITCH SLOPE = 0.00%

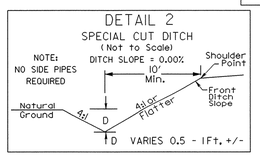

D VARIES 0.5 - 1Ft. +/-

-L- STA 36+50 to 37+13 LT	EL=24.20
-L- STA 37+58 to 37+68 LT	EL=24.50
-L- STA 38+13 to 38+24 LT	EL=24.60
-L- STA 38+68 to 39+37 LT	EL=24.90
-L- STA 39+75 to 39+89 LT	EL=25.00
-L- STA 40+28 to 40+44 LT	EL=25.00
-L- STA 40+88 to 40+98 LT	EL=25.00
-L- STA 41+43 to 41+53 LT	EL=25.40
-L- STA 41+98 to 43+55 LT	EL=25.70
-L- STA 43+97 to 44+34 LT	EL=25.70
-L- STA 44+73 to 45+18 LT	EL=26.20
-L- STA 45+65 to 46+10 LT	EL=26.20

DETAIL 3
SPECIAL CUT DITCH
(Not to Scale)
DITCH SLOPE = 0.00%

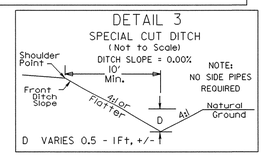

D VARIES 0.5 - 1Ft. +/- 1

-L- STA 36+14 to 37+10 RT	EL=24.20
-L- STA 37+50 to 37+68 RT	EL=24.50
-L- STA 38+13 to 39+58 RT	EL=24.80
-L- STA 40+33 to 40+61 RT	EL=25.50
-L- STA 41+43 to 42+08 RT	EL=25.60
-L- STA 42+53 to 42+63 RT	EL=25.80
-L- STA 43+08 to 43+19 RT	EL=26.00
-L- STA 43+64 to 44+45 RT	EL=26.20
-L- STA 44+83 to 45+39 RT	EL=26.50
-L- STA 45+84 to 46+48 RT	EL=26.90

NOTES:

1) FOR -L- PROFILE SEE SHEET 28.
2) DRIVEWAY RADII ARE 10' UNLESS OTHERWISE NOTED.
3) PAVED SHOULDER TAPERS ARE 8:1 UNLESS OTHERWISE NOTED.

12-JAN-2007 10:22
r:\roadway\proj\r-2245_rdy_psh06.dgn
$$$$USERNAME$$$$

PROJECT REFERENCE NO.	SHEET NO.
R-2245	7
R/W SHEET NO.	
ROADWAY DESIGN ENGINEER	HYDRAULICS ENGINEER

NORTH CAROLINA PROFESSIONAL SEAL 22924 ENGINEER GLENN W. MUMFORD 1/17/07

NORTH CAROLINA PROFESSIONAL SEAL 19775 ENGINEER RAY D. ALGINGOOD 19 JAN 07

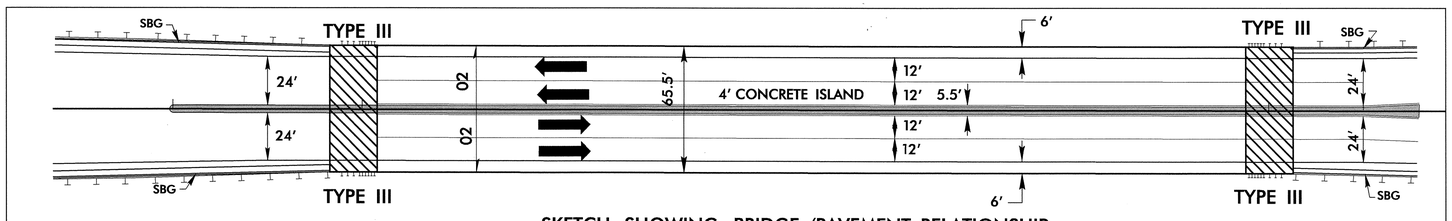

SKETCH SHOWING BRIDGE /PAVEMENT RELATIONSHIP

NOT TO SCALE

NAD 83

SPECIAL CONTROL OF ACCESS DESIGNATION

C A

NO REVISIONS SHALL BE MADE TO THE CONTROL OF ACCESS WITHOUT APPROVAL OF NCDOT, FHWA, USEPA AND NCDENR PER AGREEMENT AND USACE PER PERMIT CONDITION.

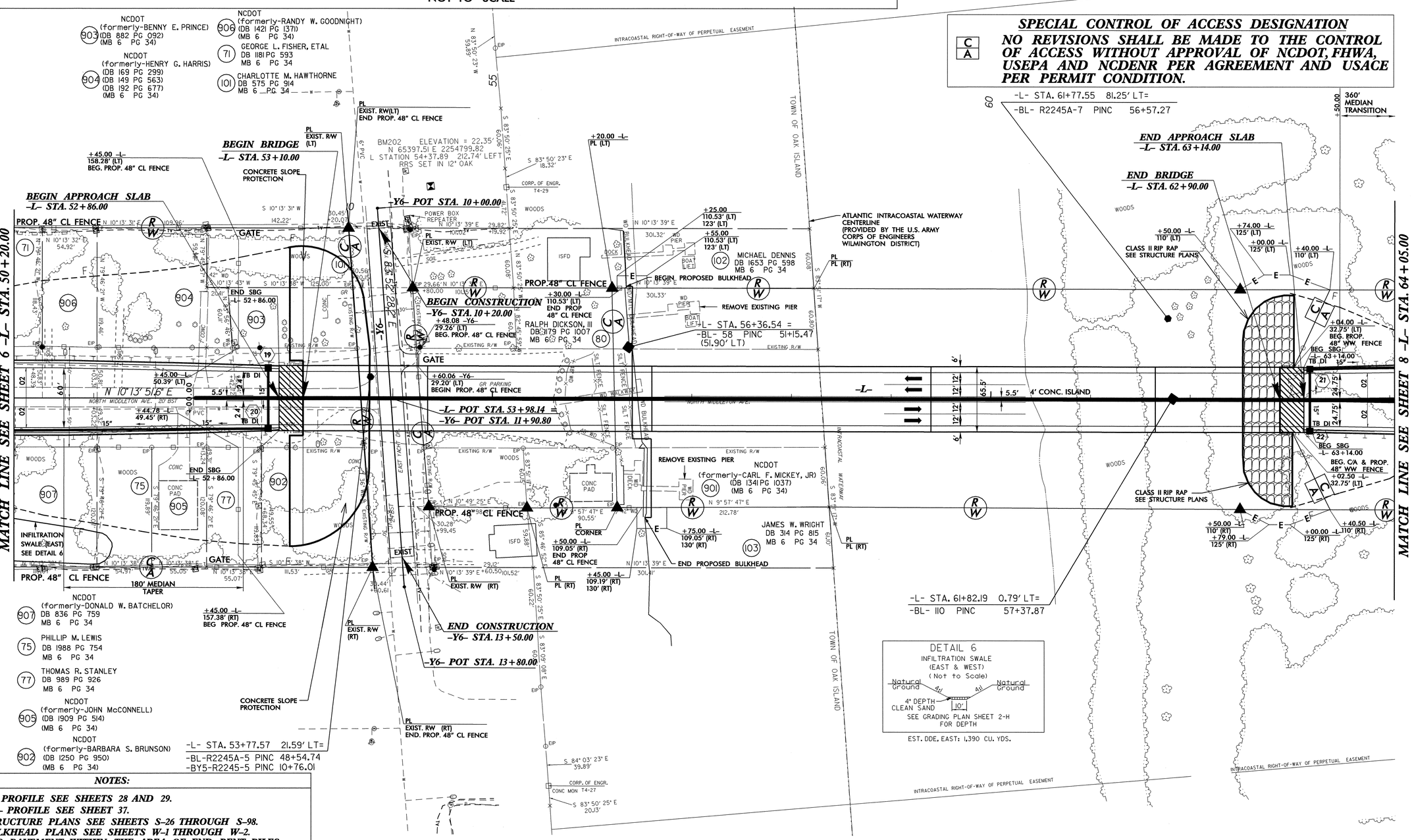

NOTES:

1) FOR -L- PROFILE SEE SHEETS 28 AND 29.
2) FOR -Y6- PROFILE SEE SHEET 37.
3) FOR STRUCTURE PLANS SEE SHEETS S-26 THROUGH S-98.
4) FOR BULKHEAD PLANS SEE SHEETS W-1 THROUGH W-2.
5) EXISTING PAVEMENT WITHIN THE AREA OF END BENT PILES SHALL BE REMOVED AND SCARIFIED TO MINIMUM DEPTH OF 2.0'.

8/17/99

18-JAN-2007 13:02
r:\r2245_rdy_psh07.dgn
$$$$USERNAME$$$$

PROJECT REFERENCE NO.	SHEET NO.
R-2245	8
R/W SHEET NO.	
ROADWAY DESIGN ENGINEER	HYDRAULICS ENGINEER

NORTH CAROLINA PROFESSIONAL SEAL 22924 ENGINEER GLENN W. MUMFORD 3/2/07

NORTH CAROLINA PROFESSIONAL SEAL 19775 ENGINEER RAY D. LOVINGGOOD 2 MAR 07

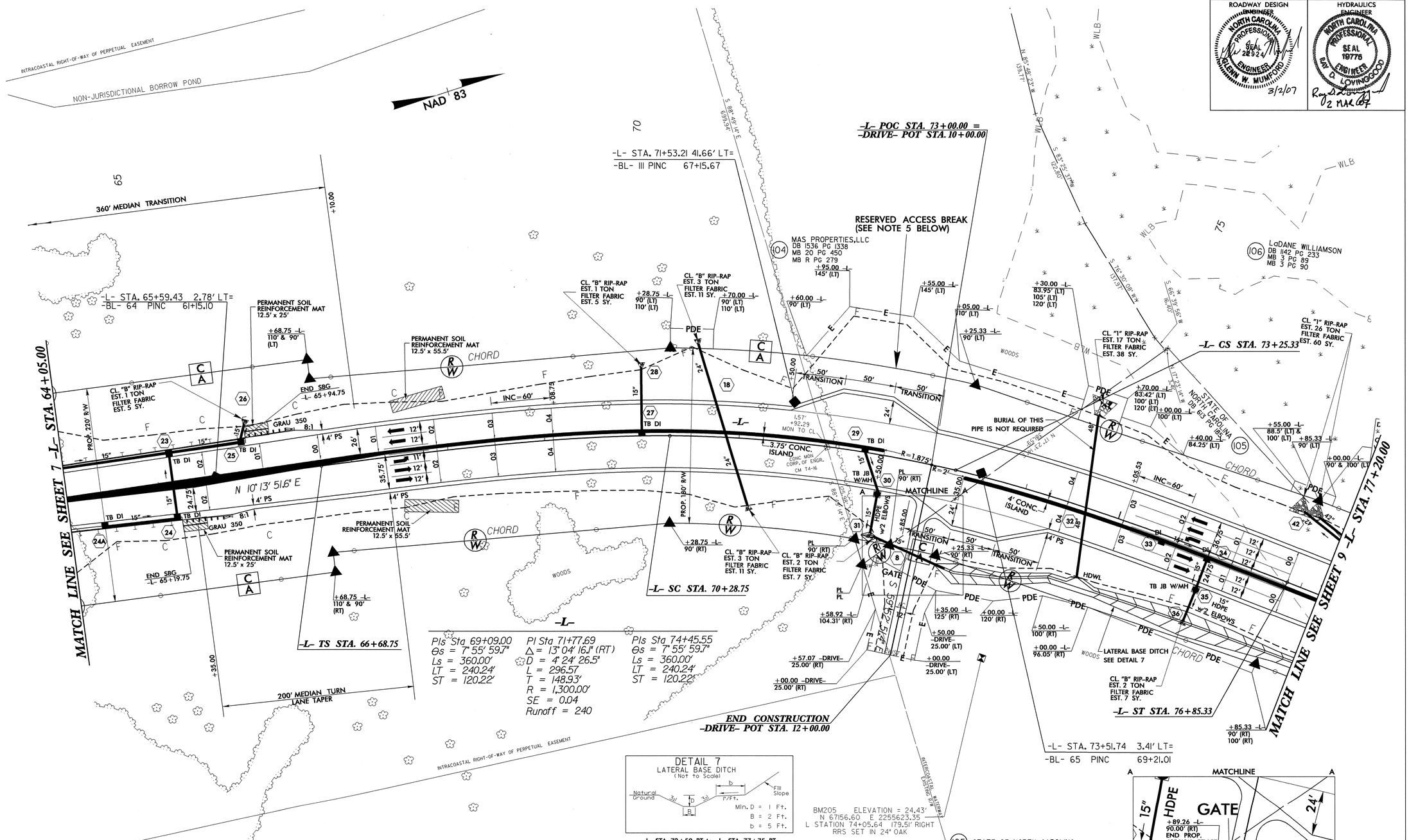

NOTES:

1) FOR -L- PROFILE SEE SHEET 29.
2) FOR -DRIVE- PROFILE SEE SHEET 35.
3) PAVED SHOULDER TAPERS ARE 8:1 UNLESS OTHERWISE NOTED.
4) ACCESS ROAD TO BE CONSTRUCTED BY OTHERS.
5) A FUTURE CONTROL-OF-ACCESS BREAK HAS BEEN RESERVED LEFT OF -L- STATION 72+65.00. ANY ACCESS BREAK AT THIS LOCATION SHALL BE IN ACCORDANCE WITH SPECIFIC GUIDELINES SET FORTH IN THE MEMORANDUM OF UNDERSTANDING BETWEEN NCDOT, FHWA, NCDENR AND USEPA AND PERMIT CONDITIONS PRESCRIBED BY USACE.

SPECIAL CONTROL OF ACCESS DESIGNATION

C/A NO REVISIONS SHALL BE MADE TO THE CONTROL OF ACCESS WITHOUT APPROVAL OF NCDOT, FHWA, USEPA AND NCDENR PER AGREEMENT AND USACE PER PERMIT CONDITION.

REVISIONS

8/17/99

01-MAR-2007 09:43
r:\Roadway\Proj\r2245_rdy_psh08.dgn
$$$$USERNAME$$$$

PROJECT REFERENCE NO.	SHEET NO.
R-2245	9
R/W SHEET NO.	
ROADWAY DESIGN ENGINEER	HYDRAULICS ENGINEER

NORTH CAROLINA PROFESSIONAL SEAL 22924 ENGINEER GLENN W. MUMFORD 1/17/07

NORTH CAROLINA PROFESSIONAL SEAL 19775 ENGINEER RAY D. LOVINGGOOD 22 JAN 07

REVISIONS

8/17/99

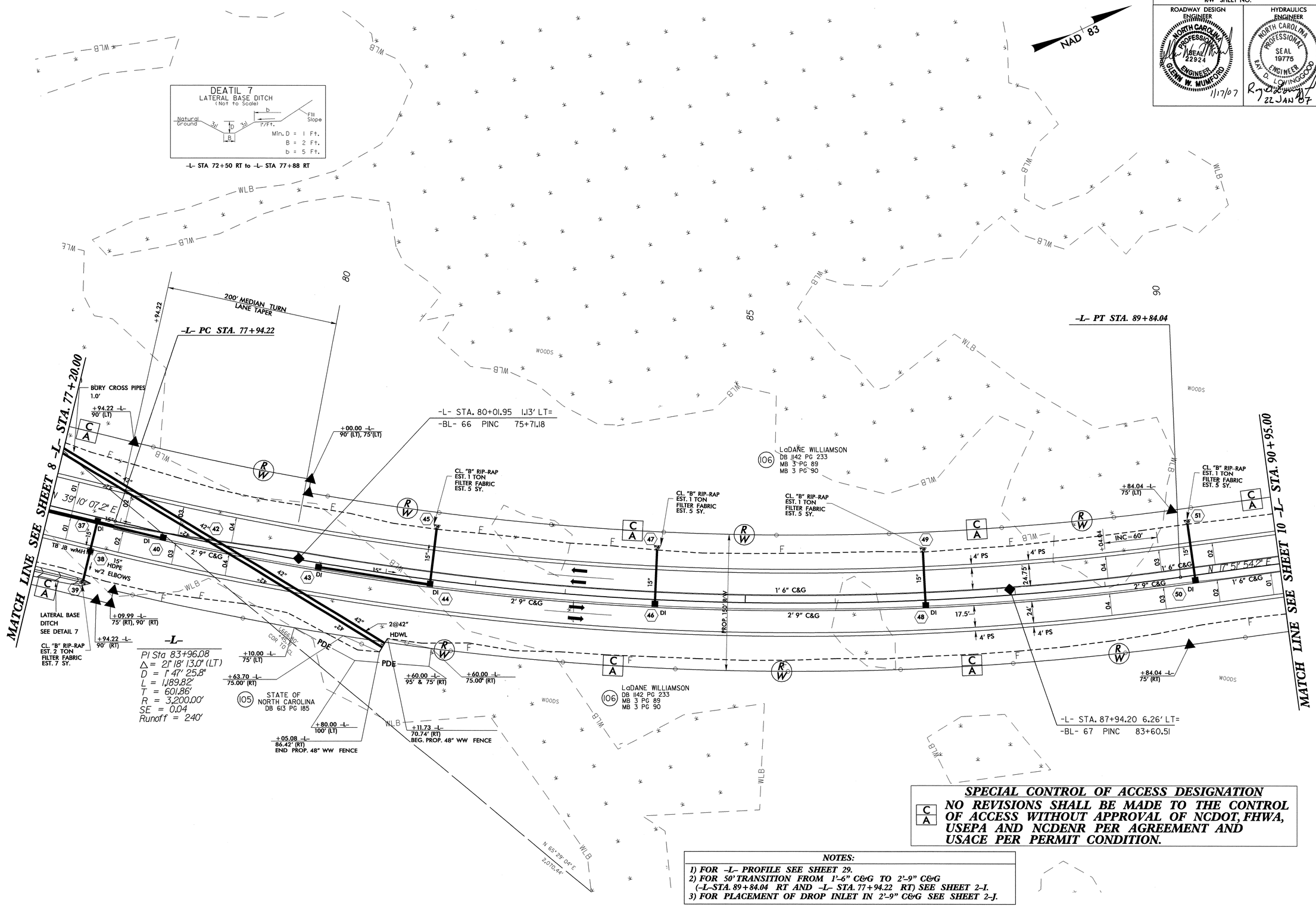

SPECIAL CONTROL OF ACCESS DESIGNATION

NO REVISIONS SHALL BE MADE TO THE CONTROL OF ACCESS WITHOUT APPROVAL OF NCDOT, FHWA, USEPA AND NCDENR PER AGREEMENT AND USACE PER PERMIT CONDITION.

NOTES:

1) FOR -L- PROFILE SEE SHEET 29.
2) FOR 50' TRANSITION FROM 1'-6" C&G TO 2'-9" C&G (-L-STA. 89+84.04 RT AND -L- STA. 77+94.22 RT) SEE SHEET 2-I.
3) FOR PLACEMENT OF DROP INLET IN 2'-9" C&G SEE SHEET 2-J.

22-JAN-2007 12:16
r:\roadway\proj\r2245_rdy_psh09.dgn
$$$$USERNAME$$$$

PROJECT REFERENCE NO.	SHEET NO.
R-2245	10
R/W SHEET NO.	
ROADWAY DESIGN ENGINEER	HYDRAULICS ENGINEER

NORTH CAROLINA PROFESSIONAL SEAL 20924 ENGINEER JEREMY W. MUMFORD 1/17/07

NORTH CAROLINA PROFESSIONAL SEAL 19775 ENGINEER RAY D. GOODWIN 22 JAN 07

REVISIONS

8/17/99

SPECIAL CONTROL OF ACCESS DESIGNATION

C A ***NO REVISIONS SHALL BE MADE TO THE CONTROL OF ACCESS WITHOUT APPROVAL OF NCDOT, FHWA, USEPA AND NCDENR PER AGREEMENT AND USACE PER PERMIT CONDITION.***

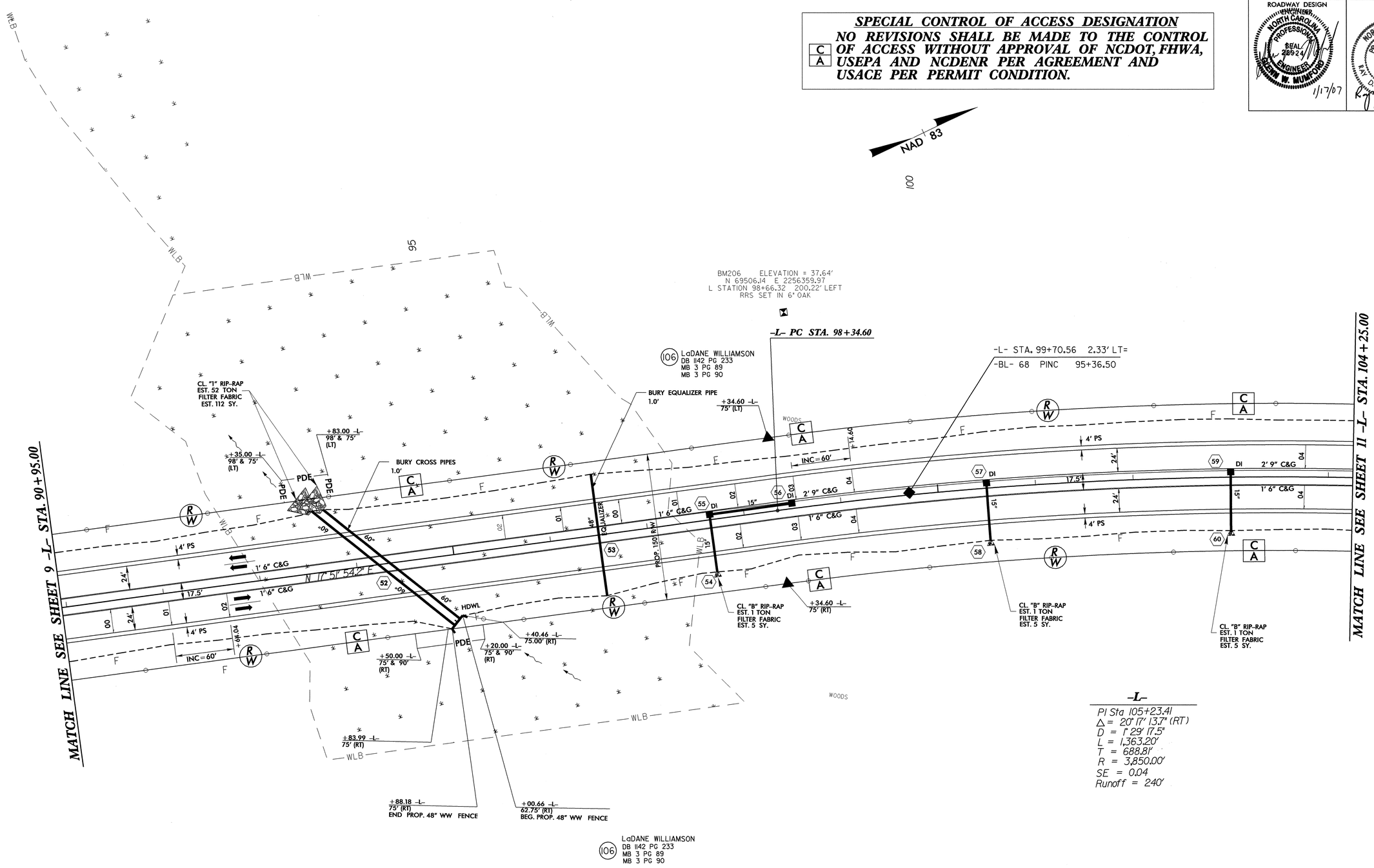

-L-

PI Sta 105+23.41
Δ = 20° 17' 13.7" (RT)
D = 1° 29' 17.5"
L = 1,363.20'
T = 688.81'
R = 3,850.00'
SE = 0.04
Runoff = 240'

NOTES:

1) FOR -L- PROFILE SEE SHEETS 29 AND 30.
2) FOR 50' TRANSITION FROM 1'-6" C&G TO 2'-9" C&G (-L- STA. 98+34.60 LT) SEE SHEET 2-I.
3) FOR PLACEMENT OF DROP INLET IN 2'-9" C&G SEE SHEET 2-J.

22-JAN-2007 12:16
r:\roadway\proj\r2245_rdy_psht10.dgn
$$$$USERNAME$$$$

PROJECT REFERENCE NO.	SHEET NO.
R-2245	11
R/W SHEET NO.	
ROADWAY DESIGN ENGINEER	HYDRAULICS ENGINEER
NORTH CAROLINA PROFESSIONAL SEAL 22924 ENGINEER GLENN W. MUMFORD 1/17/07	NORTH CAROLINA PROFESSIONAL SEAL 19776 ENGINEER RAY D. LOWNGOOD 19 JAN 07

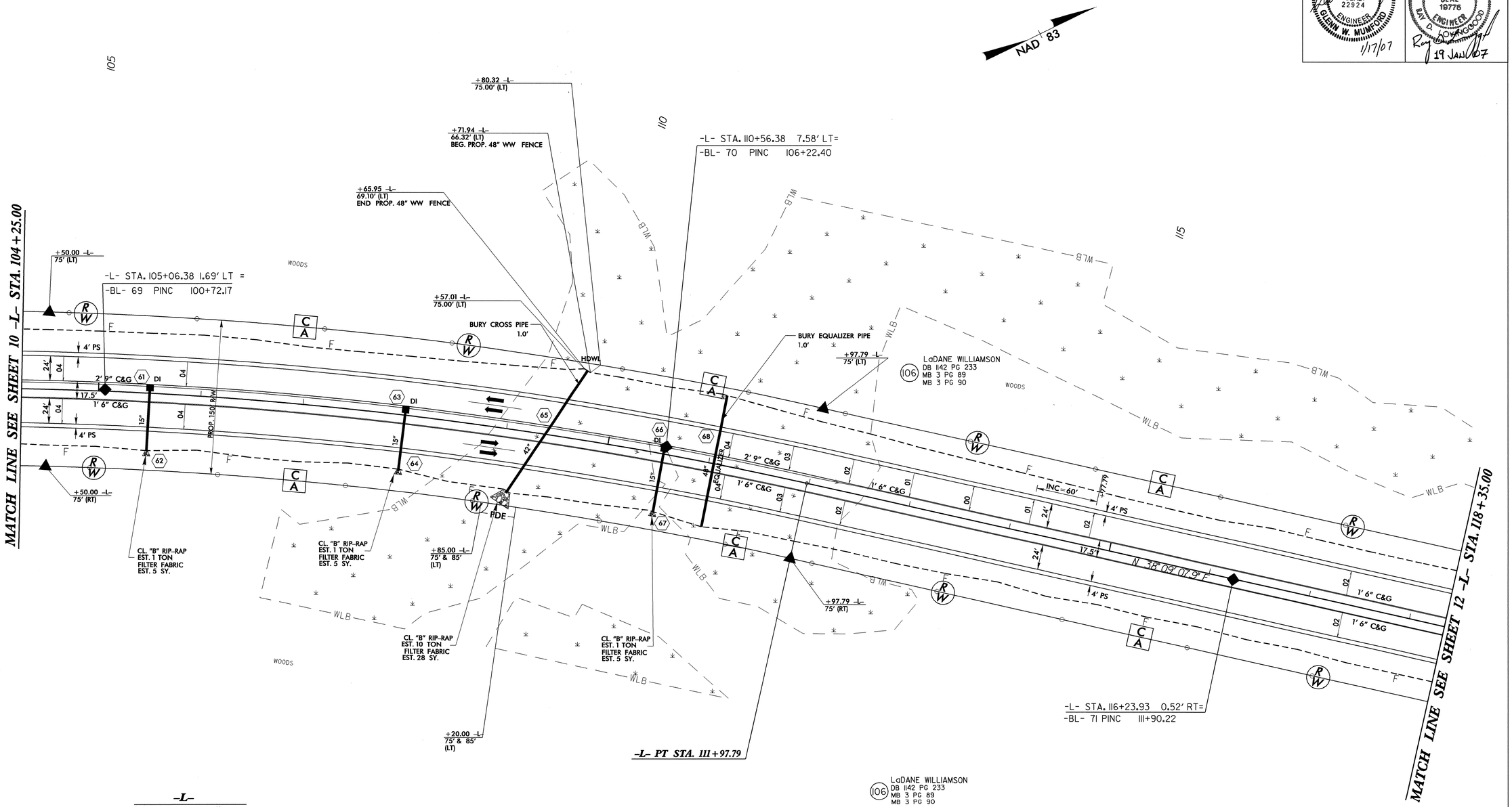

-L-

PI Sta 105+23.41
Δ = 20° 17' 13.7" (RT)
D = 1° 29' 17.5"
L = 1,363.20'
T = 688.81'
R = 3,850.00'
SE = 0.04
Runoff = 240'

SPECIAL CONTROL OF ACCESS DESIGNATION

C/A NO REVISIONS SHALL BE MADE TO THE CONTROL OF ACCESS WITHOUT APPROVAL OF NCDOT, FHWA, USEPA AND NCDENR PER AGREEMENT AND USACE PER PERMIT CONDITION.

NOTES:

1) FOR -L- PROFILE SEE SHEET 30.
2) FOR 50' TRANSITION FROM 1'-6" C&G TO 2'-9" C&G (-L- STA. 111+97.79 LT) SEE SHEET 2-I.
3) FOR PLACEMENT OF DROP INLET IN 2'-9" C&G SEE SHEET 2-J.

REVISIONS

8/17/99

16-JAN-2007 15:07
r:\roadway\proj\r2245_rdy_psh11.dgn
$$$$USERNAME$$$$

PROJECT REFERENCE NO.	SHEET NO.
R-2245	12
R/W SHEET NO.	
ROADWAY DESIGN ENGINEER	HYDRAULICS ENGINEER

NORTH CAROLINA PROFESSIONAL SEAL 22924 ENGINEER GLENN W. MUMFORD 1/17/07

NORTH CAROLINA PROFESSIONAL SEAL 19775 ENGINEER RAY D. LOVINGGOOD 19 JAN '07

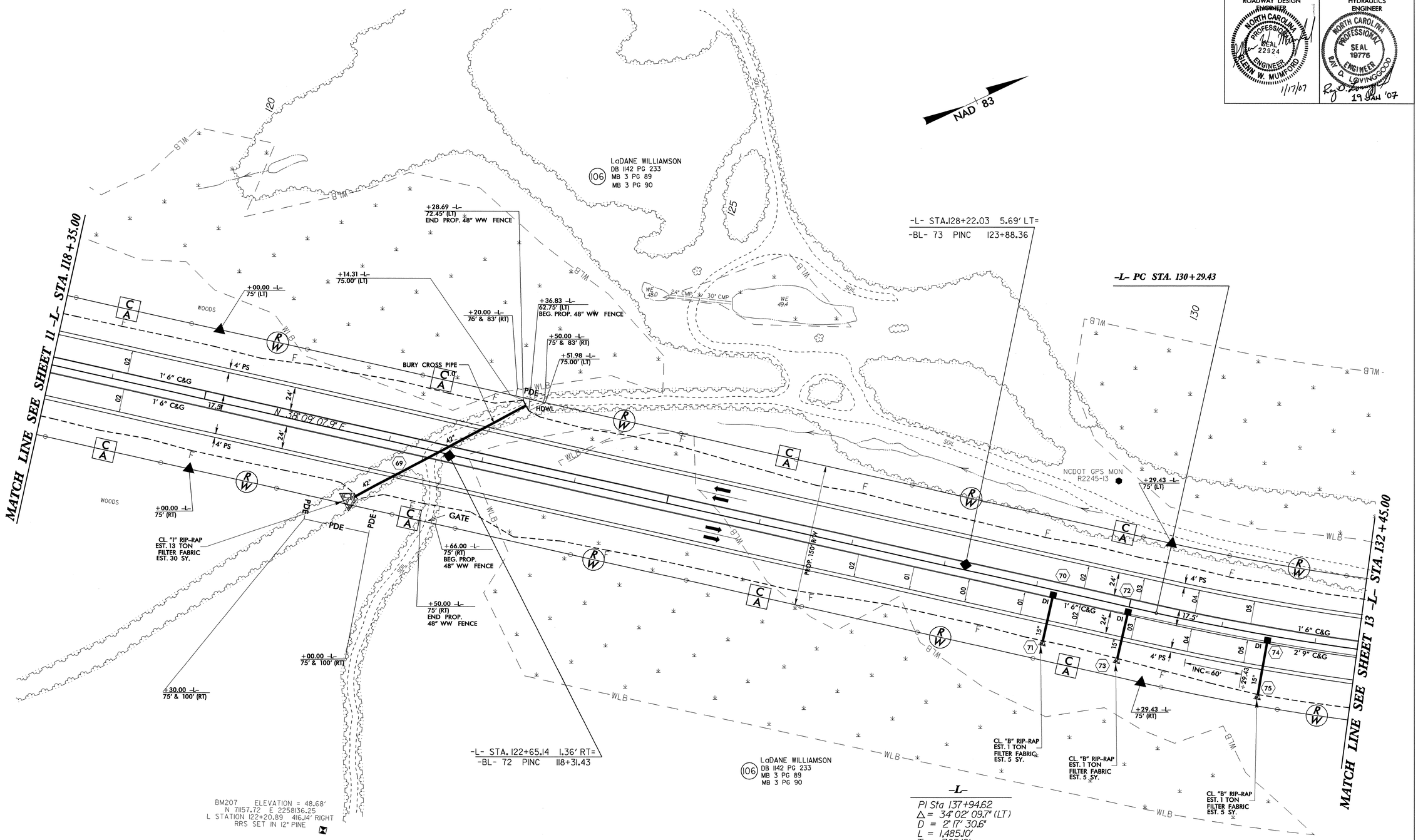

-L-
PI Sta 137+94.62
Δ = 34° 02' 09.7" (LT)
D = 2° 17' 30.6"
L = 1,485.10'
T = 765.19'
R = 2,500.00'
SE = 0.05
Runoff = 300'

SPECIAL CONTROL OF ACCESS DESIGNATION

C/A — NO REVISIONS SHALL BE MADE TO THE CONTROL OF ACCESS WITHOUT APPROVAL OF NCDOT, FHWA, USEPA AND NCDENR PER AGREEMENT AND USACE PER PERMIT CONDITION.

NOTES:

1) FOR -L- PROFILE SEE SHEETS 30 AND 31.
2) FOR 50' TRANSITION FROM 1'-6" C&G TO 2'-9" C&G (-L- STA. 130+29.43 RT) SEE SHEET 2-I.
3) FOR PLACEMENT OF DROP INLET IN 2'-9" C&G SEE SHEET 2-J.

REVISIONS

8/17/99

16-JAN-2007 15:07
r:\roadway\proj\r2245_rdy_psh12.dgn
$$$$USERNAME$$$$

RD223245 1/16/2007 r2245_rdy_psh12 tlwhite RD Qse34

PROJECT REFERENCE NO.	SHEET NO.
R-2245	13
R/W SHEET NO.	
ROADWAY DESIGN ENGINEER	HYDRAULICS ENGINEER
NORTH CAROLINA PROFESSIONAL SEAL 22924 ENGINEER GLENN W. MUMFORD 1/17/07	NORTH CAROLINA PROFESSIONAL SEAL 19776 ENGINEER RAY D. LOVINGGOOD 19 JAN 07

REVISIONS

8/17/99

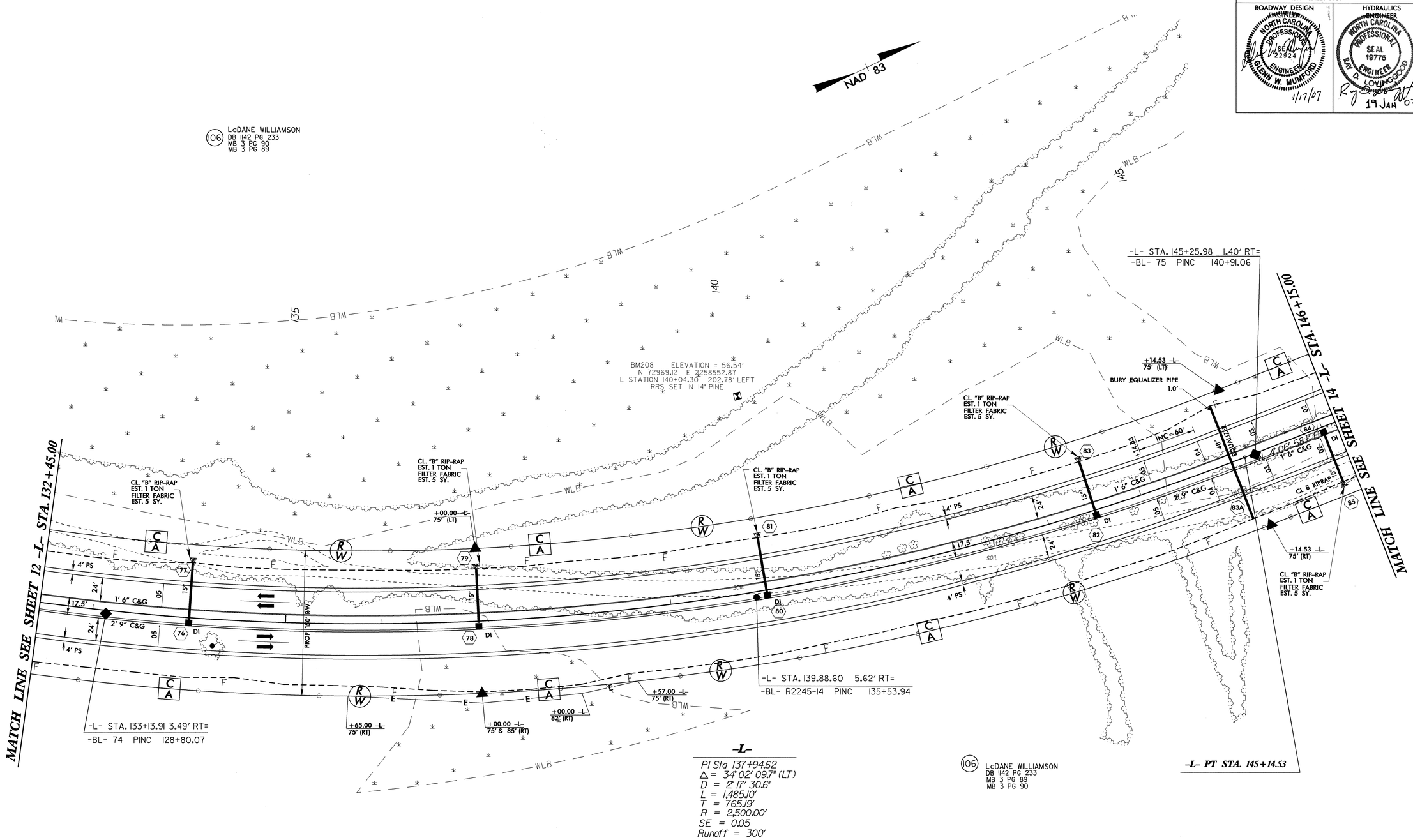

SPECIAL CONTROL OF ACCESS DESIGNATION

C A — **NO REVISIONS SHALL BE MADE TO THE CONTROL OF ACCESS WITHOUT APPROVAL OF NCDOT, FHWA, USEPA AND NCDENR PER AGREEMENT AND USACE PER PERMIT CONDITION.**

NOTES:

1) FOR -L- PROFILE SEE SHEET 31.
2) FOR 50' TRANSITION FROM 1'-6" C&G TO 2'-9" C&G (-L- STA. 145+14.53 RT) SEE SHEET 2-I.
3) FOR PLACEMENT OF DROP INLET IN 2'-9" C&G SEE SHEET 2-J.

16-JAN-2007 15:07
r:\roadway\proj\r2245_rdy_psh13.dgn
$$$$USERNAME$$$$

3D223245 1/16/2007 r2245_rdy_psh13 tlwhite RD-Oce34

PROJECT REFERENCE NO.	SHEET NO.
R-2245	14
R/W SHEET NO.	
ROADWAY DESIGN ENGINEER	HYDRAULICS ENGINEER

NORTH CAROLINA PROFESSIONAL SEAL 22924 ENGINEER GLENN W. MUMFORD 1/17/07

NORTH CAROLINA PROFESSIONAL SEAL 19776 ENGINEER RAY D. LOVINGGOOD 19 JAN 07

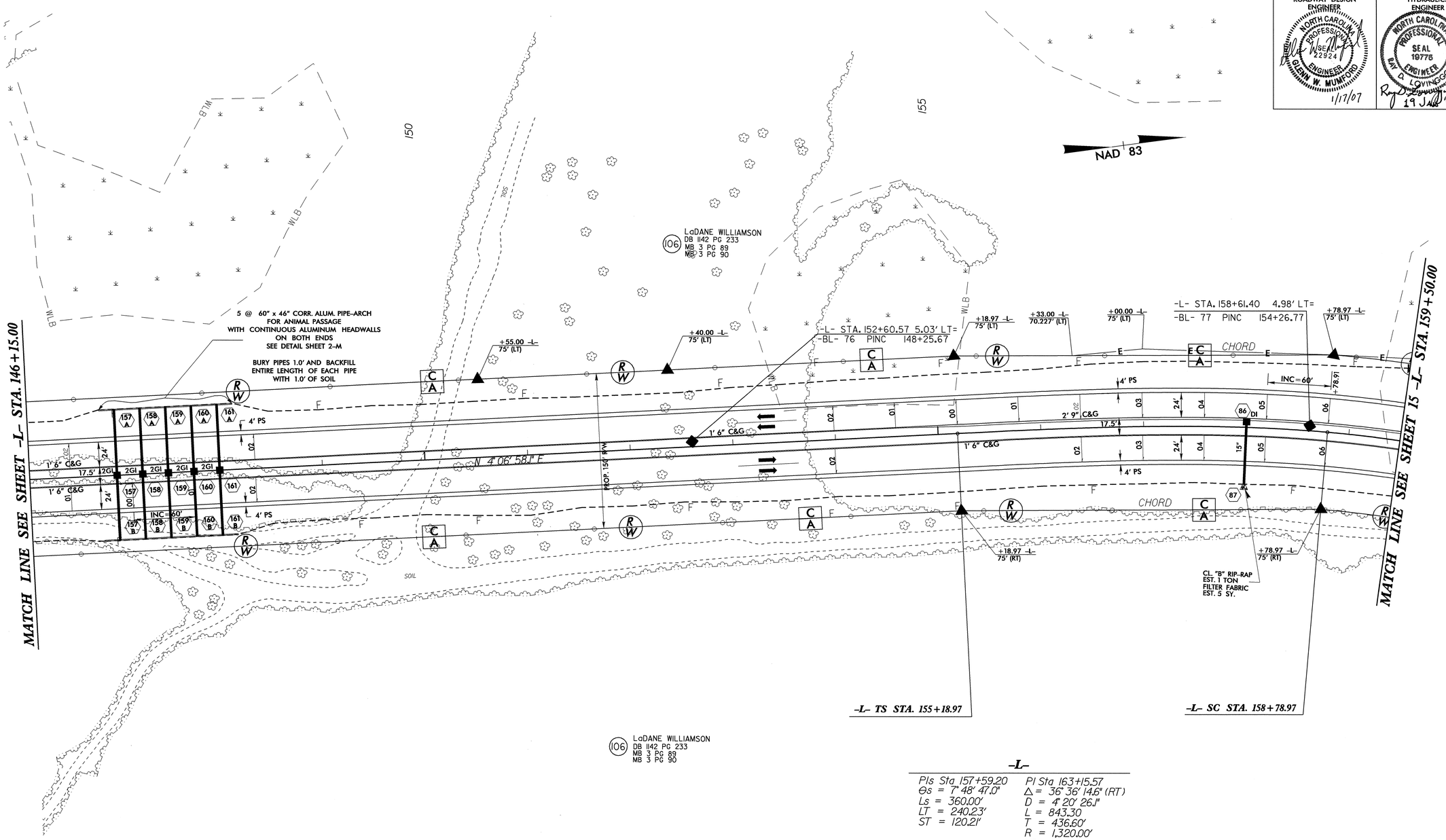

-L-

PIs Sta 157+59.20	PI Sta 163+15.57
Θs = 7° 48' 47.0"	Δ = 36° 36' 14.6" (RT)
Ls = 360.00'	D = 4° 20' 26.1"
LT = 240.23'	L = 843.30
ST = 120.21'	T = 436.60'
	R = 1,320.00'
	SE = 0.06
	Runoff = 360'

SPECIAL CONTROL OF ACCESS DESIGNATION

C A ***NO REVISIONS SHALL BE MADE TO THE CONTROL OF ACCESS WITHOUT APPROVAL OF NCDOT, FHWA, USEPA AND NCDENR PER AGREEMENT AND USACE PER PERMIT CONDITON.***

NOTES:

1) FOR -L- PROFILE SEE SHEETS 31 AND 32.
2) FOR 50' TRANSITION FROM 1'-6" C&G TO 2'-9" C&G (-L- STA. 155+18.97 LT) SEE SHEET 2-I.
3) FOR PLACEMENT OF DROP INLET IN 2'-9" C&G SEE SHEET 2-J.

REVISIONS

8/17/99

16-JAN-2007 15:07
I:\roadway\proj\r2245_rdy_psh14.dgn
$$$$USERNAME$$$$

PROJECT REFERENCE NO.	SHEET NO.
R-2245	15
R/W SHEET NO.	
ROADWAY DESIGN ENGINEER	HYDRAULICS ENGINEER

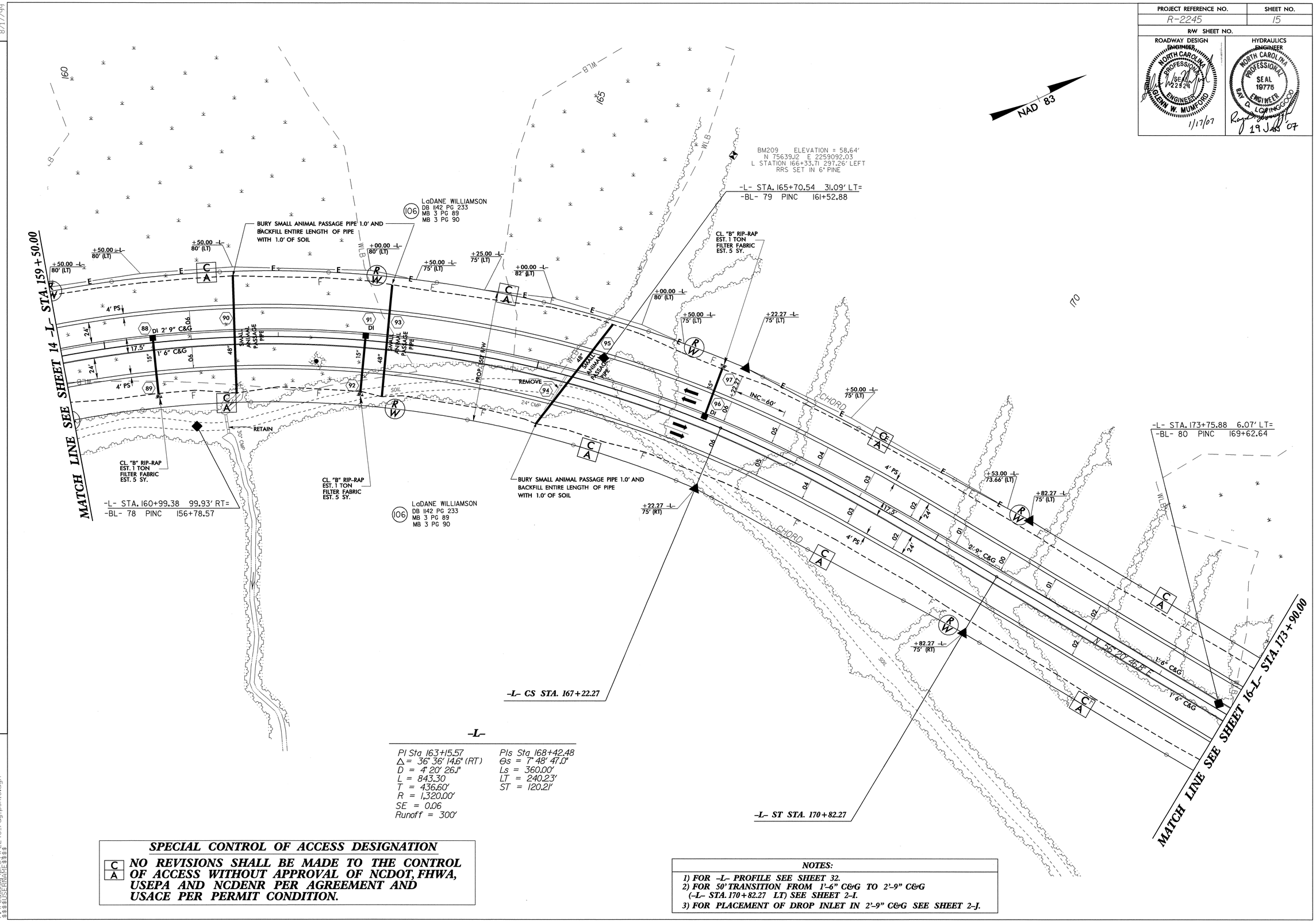

-L-

PI Sta 163+15.57	PIs Sta 168+42.48
Δ = 36° 36' 14.6" (RT)	Θs = 7° 48' 47.0"
D = 4° 20' 26.1"	Ls = 360.00'
L = 843.30	LT = 240.23'
T = 436.60'	ST = 120.21'
R = 1,320.00'	
SE = 0.06	
Runoff = 300'	

SPECIAL CONTROL OF ACCESS DESIGNATION

C/A NO REVISIONS SHALL BE MADE TO THE CONTROL OF ACCESS WITHOUT APPROVAL OF NCDOT, FHWA, USEPA AND NCDENR PER AGREEMENT AND USACE PER PERMIT CONDITION.

NOTES:

1) FOR -L- PROFILE SEE SHEET 32.
2) FOR 50' TRANSITION FROM 1'-6" C&G TO 2'-9" C&G (-L- STA. 170+82.27 LT) SEE SHEET 2-I.
3) FOR PLACEMENT OF DROP INLET IN 2'-9" C&G SEE SHEET 2-J.

REVISIONS

8/17/99

16-JAN-2007 15:40
r:\roadway\proj\r2245_rdy_psh15.dgn
$$$$USERNAME$$$$

PROJECT REFERENCE NO.	SHEET NO.
R-2245	16
R/W SHEET NO.	
ROADWAY DESIGN ENGINEER	HYDRAULICS ENGINEER

NORTH CAROLINA PROFESSIONAL SEAL 22924 ENGINEER GLENN W. MUMFORD 1/17/07

NORTH CAROLINA PROFESSIONAL SEAL 19775 ENGINEER RAY D. LOVINGOOD 19 JAN 07

SPECIAL CONTROL OF ACCESS DESIGNATION

C A — NO REVISIONS SHALL BE MADE TO THE CONTROL OF ACCESS WITHOUT APPROVAL OF NCDOT, FHWA, USEPA AND NCDENR PER AGREEMENT AND USACE PER PERMIT CONDITION.

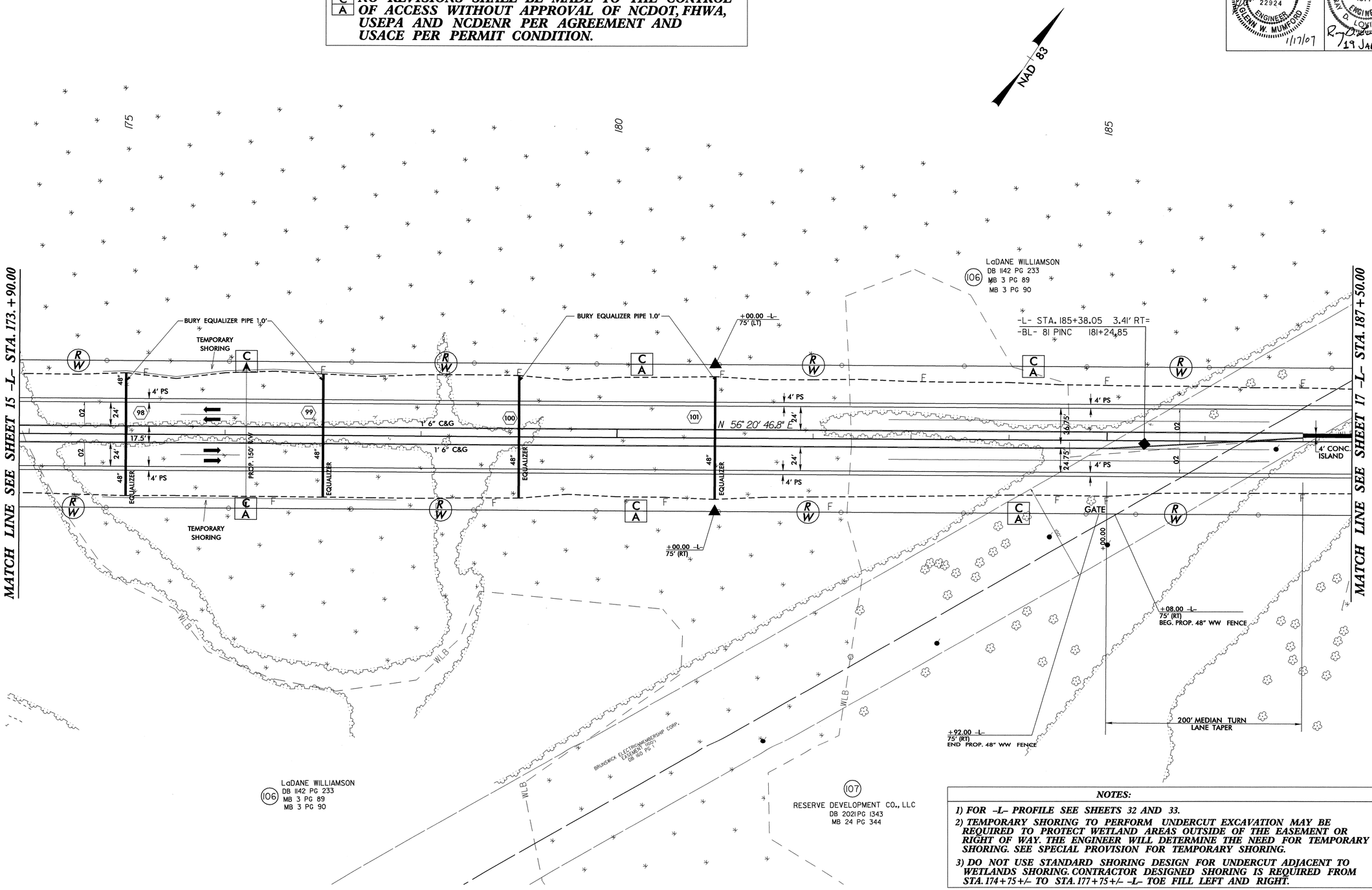

NOTES:

1) FOR -L- PROFILE SEE SHEETS 32 AND 33.

2) TEMPORARY SHORING TO PERFORM UNDERCUT EXCAVATION MAY BE REQUIRED TO PROTECT WETLAND AREAS OUTSIDE OF THE EASEMENT OR RIGHT OF WAY. THE ENGINEER WILL DETERMINE THE NEED FOR TEMPORARY SHORING. SEE SPECIAL PROVISION FOR TEMPORARY SHORING.

3) DO NOT USE STANDARD SHORING DESIGN FOR UNDERCUT ADJACENT TO WETLANDS SHORING. CONTRACTOR DESIGNED SHORING IS REQUIRED FROM STA. 174+75+/- TO STA. 177+75+/- -L- TOE FILL LEFT AND RIGHT.

REVISIONS

8/17/99

19-JAN-2007 09:22
f:\rdsh\pr2245_rdy_psh16.dgn
$$$$USERNAME$$$$

PROJECT REFERENCE NO.	SHEET NO.
R-2245	17
R/W SHEET NO.	
ROADWAY DESIGN ENGINEER	HYDRAULICS ENGINEER

NORTH CAROLINA PROFESSIONAL SEAL 22924 ENGINEER GLENN W. MUMFORD 3/2/07

NORTH CAROLINA PROFESSIONAL SEAL 19775 ENGINEER RAY D. LOVINGGOOD 2 MAR 07

SPECIAL CONTROL OF ACCESS DESIGNATION

C/A **NO REVISIONS SHALL BE MADE TO THE CONTROL OF ACCESS WITHOUT APPROVAL OF NCDOT, FHWA, USEPA AND NCDENR PER AGREEMENT AND USACE PER PERMIT CONDITION.**

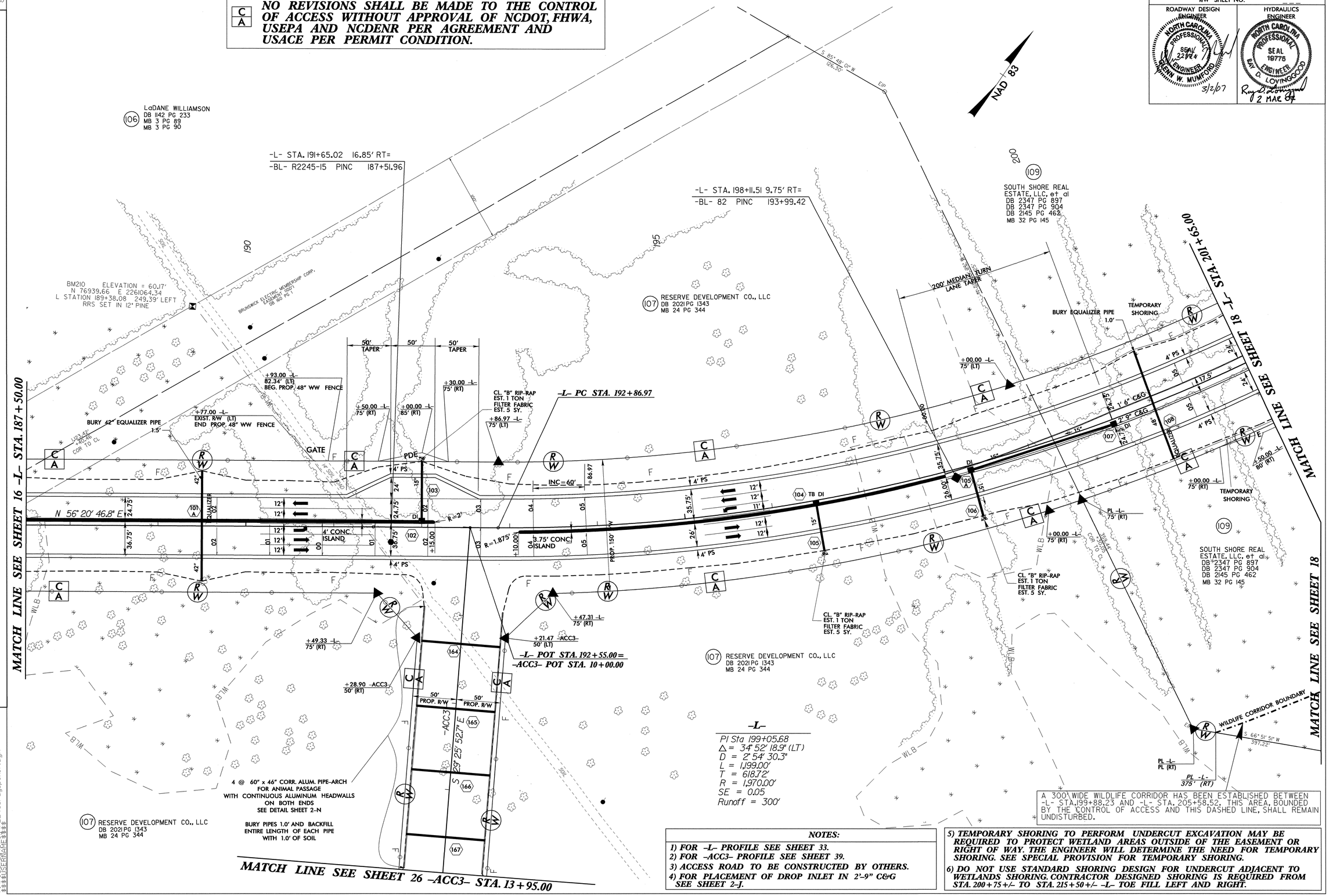

A 300' WIDE WILDLIFE CORRIDOR HAS BEEN ESTABLISHED BETWEEN -L- STA.199+88.23 AND -L- STA. 205+58.52. THIS AREA, BOUNDED BY THE CONTROL OF ACCESS AND THIS DASHED LINE, SHALL REMAIN UNDISTURBED.

NOTES:

1) FOR -L- PROFILE SEE SHEET 33.
2) FOR -ACC3- PROFILE SEE SHEET 39.
3) ACCESS ROAD TO BE CONSTRUCTED BY OTHERS.
4) FOR PLACEMENT OF DROP INLET IN 2'-9" C&G SEE SHEET 2-J.
5) TEMPORARY SHORING TO PERFORM UNDERCUT EXCAVATION MAY BE REQUIRED TO PROTECT WETLAND AREAS OUTSIDE OF THE EASEMENT OR RIGHT OF WAY. THE ENGINEER WILL DETERMINE THE NEED FOR TEMPORARY SHORING. SEE SPECIAL PROVISION FOR TEMPORARY SHORING.
6) DO NOT USE STANDARD SHORING DESIGN FOR UNDERCUT ADJACENT TO WETLANDS SHORING. CONTRACTOR DESIGNED SHORING IS REQUIRED FROM STA. 200+75+/- TO STA. 215+50+/- -L- TOE FILL LEFT AND RIGHT.

REVISIONS

8/17/99

01-MAR-2007 09:43
r:\roadway\proj\r2245_rdy_psh17.dgn
$$$$USERNAME$$$$

PROJECT REFERENCE NO.	SHEET NO.
R-2245	18
R/W SHEET NO.	
ROADWAY DESIGN ENGINEER	HYDRAULICS ENGINEER

NORTH CAROLINA PROFESSIONAL SEAL 23924 ENGINEER GLENN W. MUNFORD 3/2/07

NORTH CAROLINA PROFESSIONAL SEAL 19776 ENGINEER RAY D. LOVINGGOOD 02 MAR 07

REVISIONS

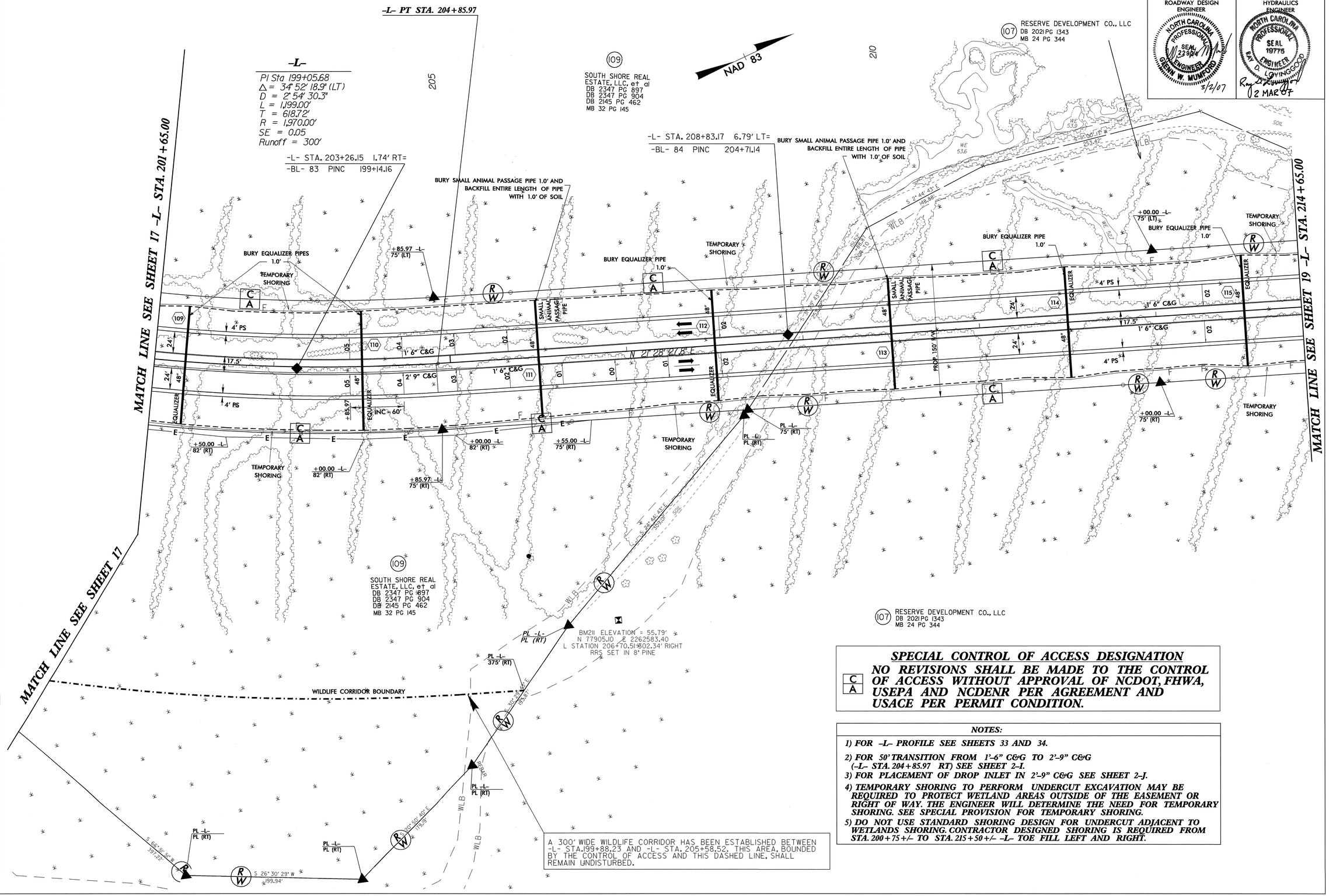

A 300' WIDE WILDLIFE CORRIDOR HAS BEEN ESTABLISHED BETWEEN -L- STA.199+88.23 AND -L- STA. 205+58.52. THIS AREA, BOUNDED BY THE CONTROL OF ACCESS AND THIS DASHED LINE, SHALL REMAIN UNDISTURBED.

SPECIAL CONTROL OF ACCESS DESIGNATION

C A

NO REVISIONS SHALL BE MADE TO THE CONTROL OF ACCESS WITHOUT APPROVAL OF NCDOT, FHWA, USEPA AND NCDENR PER AGREEMENT AND USACE PER PERMIT CONDITION.

NOTES:

1) FOR -L- PROFILE SEE SHEETS 33 AND 34.

2) FOR 50' TRANSITION FROM 1'-6" C&G TO 2'-9" C&G (-L- STA. 204+85.97 RT) SEE SHEET 2-I.

3) FOR PLACEMENT OF DROP INLET IN 2'-9" C&G SEE SHEET 2-J.

4) TEMPORARY SHORING TO PERFORM UNDERCUT EXCAVATION MAY BE REQUIRED TO PROTECT WETLAND AREAS OUTSIDE OF THE EASEMENT OR RIGHT OF WAY. THE ENGINEER WILL DETERMINE THE NEED FOR TEMPORARY SHORING. SEE SPECIAL PROVISION FOR TEMPORARY SHORING.

5) DO NOT USE STANDARD SHORING DESIGN FOR UNDERCUT ADJACENT TO WETLANDS SHORING. CONTRACTOR DESIGNED SHORING IS REQUIRED FROM STA. 200+75+/- TO STA. 215+50+/- -L- TOE FILL LEFT AND RIGHT.

01-MAR-2007 09:43
r:\roadway\proj\r-2245_rdy_pshi8.dgn
$$$$USERNAME$$$$

PROJECT REFERENCE NO.	SHEET NO.
R-2245	19
R/W SHEET NO.	
ROADWAY DESIGN ENGINEER	HYDRAULICS ENGINEER

NORTH CAROLINA PROFESSIONAL SEAL 22924 ENGINEER GLENN W. MUMFORD 1/17/07

NORTH CAROLINA PROFESSIONAL SEAL 19775 ENGINEER RAY D. LOVINGWOOD 19 Jan 07

REVISIONS

8/17/99

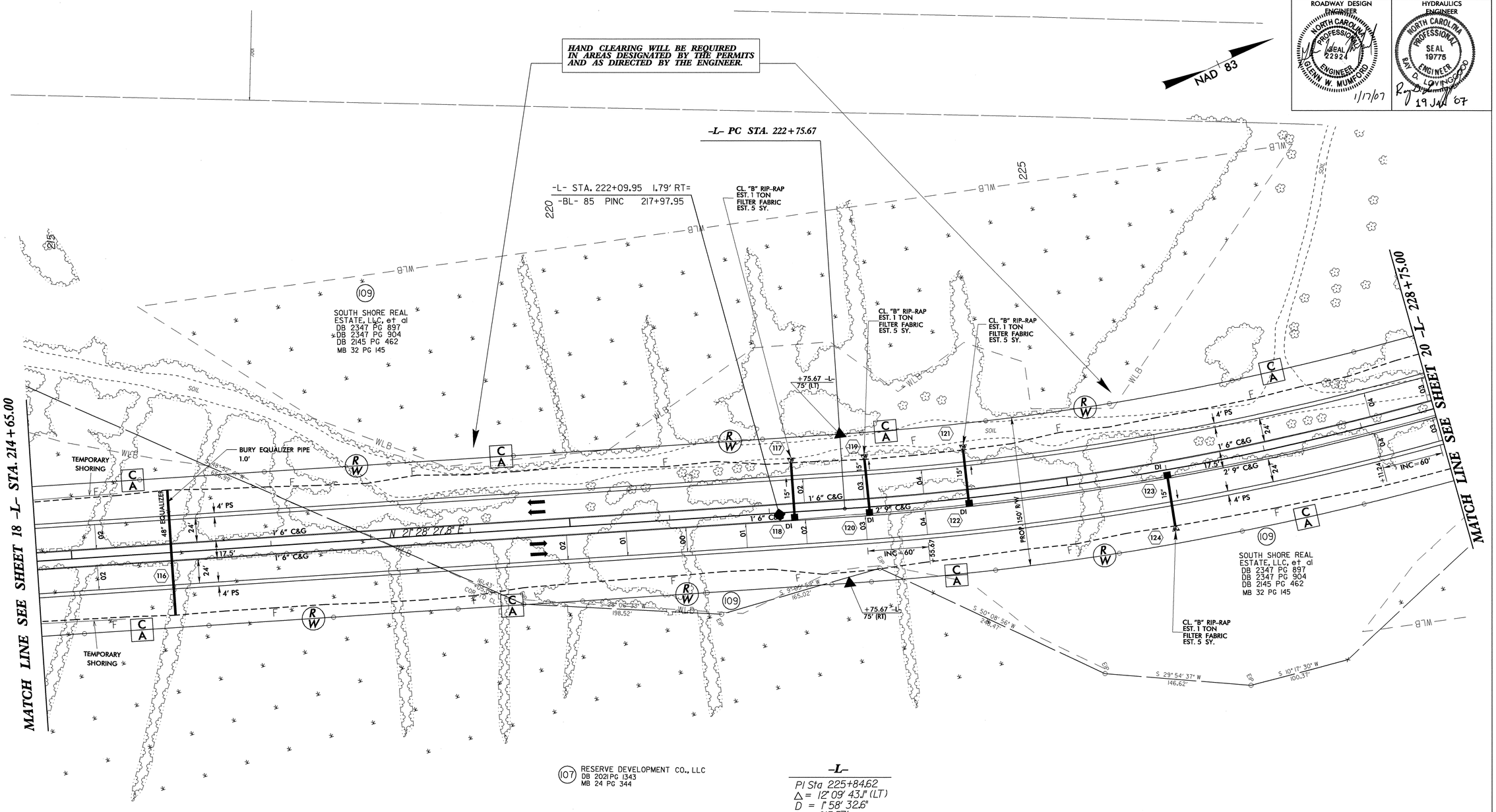

-L-

PI Sta 225+84.62
Δ = 12° 09' 43.1" (LT)
D = 1° 58' 32.6"
L = 615.57'
T = 308.95'
R = 2,900.00'
SE = 0.04
Runoff = 240'

SPECIAL CONTROL OF ACCESS DESIGNATION
NO REVISIONS SHALL BE MADE TO THE CONTROL OF ACCESS WITHOUT APPROVAL OF NCDOT, FHWA, USEPA AND NCDENR PER AGREEMENT AND USACE PER PERMIT CONDITION.

NOTES:

1) FOR -L- PROFILE SEE SHEET 34.
2) FOR 50' TRANSITION FROM 1'-6" C&G TO 2'-9" C&G (-L- STA. 222+75.67 RT) SEE SHEET 2-I.
3) FOR PLACEMENT OF DROP INLET IN 2'-9" C&G SEE SHEET 2-J.
4) TEMPORARY SHORING TO PERFORM UNDERCUT EXCAVATION MAY BE REQUIRED TO PROTECT WETLAND AREAS OUTSIDE OF THE EASEMENT OR RIGHT OF WAY. THE ENGINEER WILL DETERMINE THE NEED FOR TEMPORARY SHORING. SEE SPECIAL PROVISION FOR TEMPORARY SHORING.
5) DO NOT USE STANDARD SHORING DESIGN FOR UNDERCUT ADJACENT TO WETLANDS SHORING. CONTRACTOR DESIGNED SHORING IS REQUIRED FROM STA. 200+75+/- TO STA. 215+50+/- -L- TOE FILL LEFT AND RIGHT.

19-JAN-2007 09:22
r:\roadway\proj\r-2245_rdy_psh19.dgn
$$$$USERNAME$$$$

PROJECT REFERENCE NO.	SHEET NO.
R-2245	20
R/W SHEET NO.	
ROADWAY DESIGN ENGINEER	HYDRAULICS ENGINEER
NORTH CAROLINA PROFESSIONAL SEAL 22924 ENGINEER GLENN W. MUNFORD 11/7/07	NORTH CAROLINA PROFESSIONAL SEAL 19775 ENGINEER RAY D. LOVINGOOD 22 JAN 07

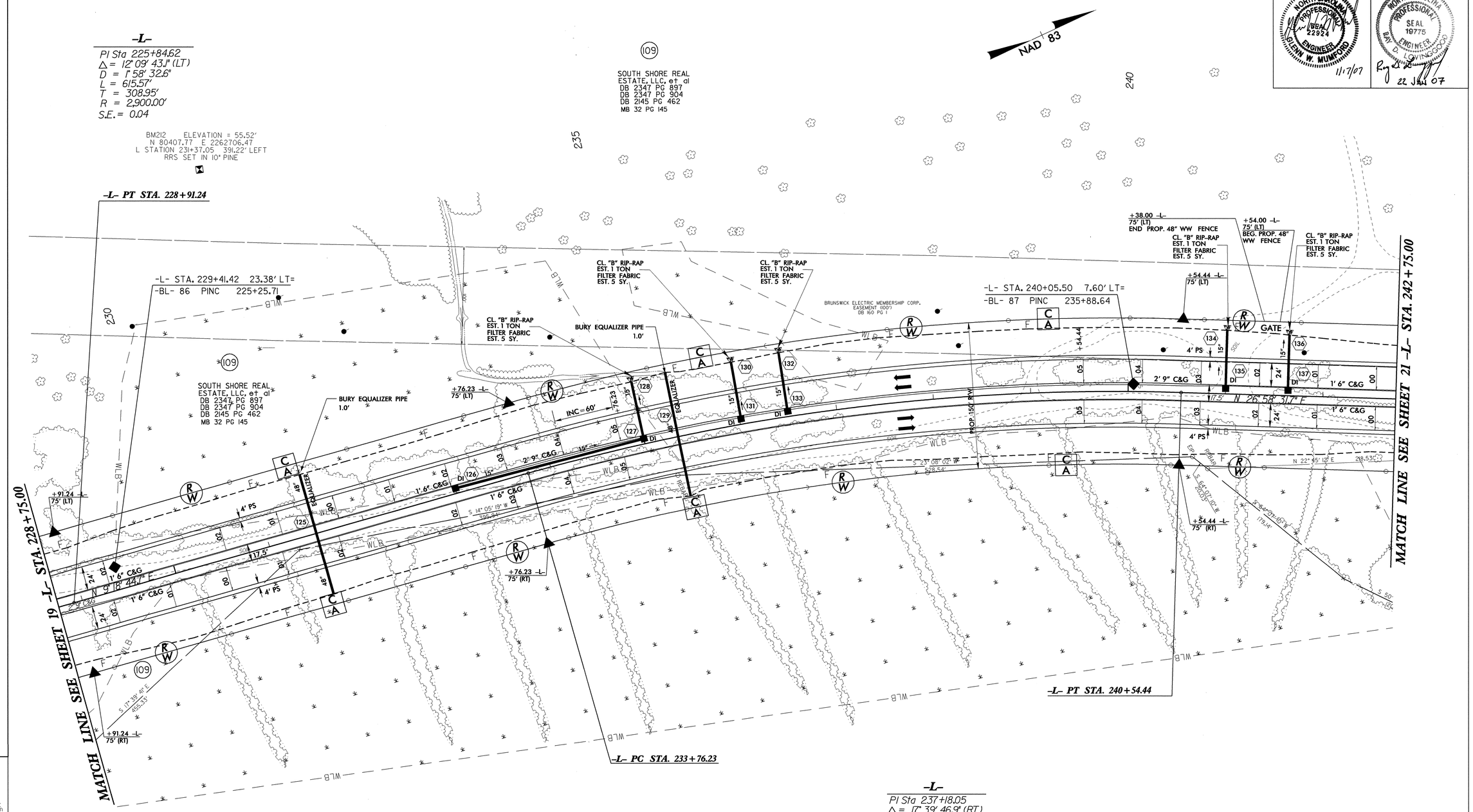

-L-

PI Sta 237+18.05
Δ = 17° 39' 46.9" (RT)
D = 2° 36' 15.7"
L = 678.21'
T = 341.82'
R = 2,200.00'
SE = 0.05
Runoff = 300'

SPECIAL CONTROL OF ACCESS DESIGNATION

C/A — **NO REVISIONS SHALL BE MADE TO THE CONTROL OF ACCESS WITHOUT APPROVAL OF NCDOT, FHWA, USEPA AND NCDENR PER AGREEMENT AND USACE PER PERMIT CONDITION.**

NOTES:

1) FOR -L- PROFILE SEE SHEETS 34 AND 35.
2) FOR 50' TRANSITION FROM 1'-6" C&G TO 2'-9" C&G (-L- STA. 228+91.24 RT, -L- STA. 233+76.23 LT) SEE SHEET 2-I.
3) FOR PLACEMENT OF DROP INLET IN 2'-9" C&G SEE SHEET 2-J.

REVISIONS

8/17/99

22-JAN-2007 14:24
f:\roadway\proj\r2245_rdy_psh20.dgn
$$$$USERNAME$$$$

PROJECT REFERENCE NO.	SHEET NO.
R-2245	21
R/W SHEET NO.	
ROADWAY DESIGN ENGINEER	HYDRAULICS ENGINEER

NORTH CAROLINA PROFESSIONAL SEAL 22924 ENGINEER GLENN W. MUMFORD 1/17/07

NORTH CAROLINA PROFESSIONAL SEAL 19775 ENGINEER RAY D. LINGGOOD 22 JAN 2007

SPECIAL CONTROL OF ACCESS DESIGNATION

C/A **NO REVISIONS SHALL BE MADE TO THE CONTROL OF ACCESS WITHOUT APPROVAL OF NCDOT, FHWA, USEPA AND NCDENR PER AGREEMENT AND USACE PER PERMIT CONDITION.**

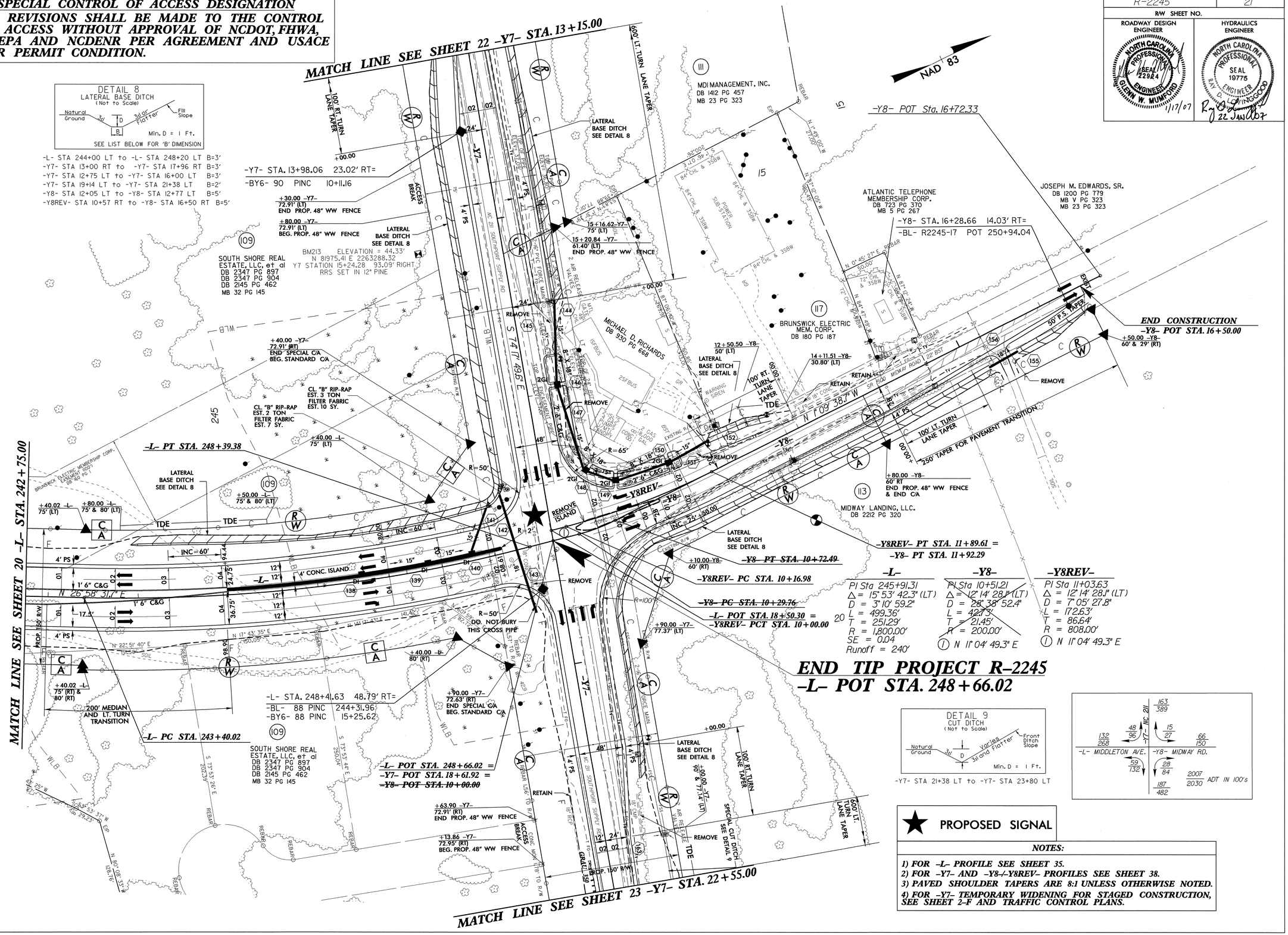

NOTES:

1) FOR -L- PROFILE SEE SHEET 35.
2) FOR -Y7- AND -Y8-/-Y8REV- PROFILES SEE SHEET 38.
3) PAVED SHOULDER TAPERS ARE 8:1 UNLESS OTHERWISE NOTED.
4) FOR -Y7- TEMPORARY WIDENING FOR STAGED CONSTRUCTION, SEE SHEET 2-F AND TRAFFIC CONTROL PLANS.

REVISIONS

8/17/99

22-JAN-2007 12:16
f:\roadway\proj\r-2245_rdy_psh21.dgn
$$$$USERNAME$$$$

PROJECT REFERENCE NO.	SHEET NO.
R-2245	22
R/W SHEET NO.	
ROADWAY DESIGN ENGINEER	HYDRAULICS ENGINEER

NORTH CAROLINA PROFESSIONAL SEAL 22924 ENGINEER GLENN W. MUMFORD 1/17/07

NORTH CAROLINA PROFESSIONAL SEAL 19776 ENGINEER RAY D. DOVINGOOD 19 JAN 07

NAD 83

REVISIONS

8/17/99

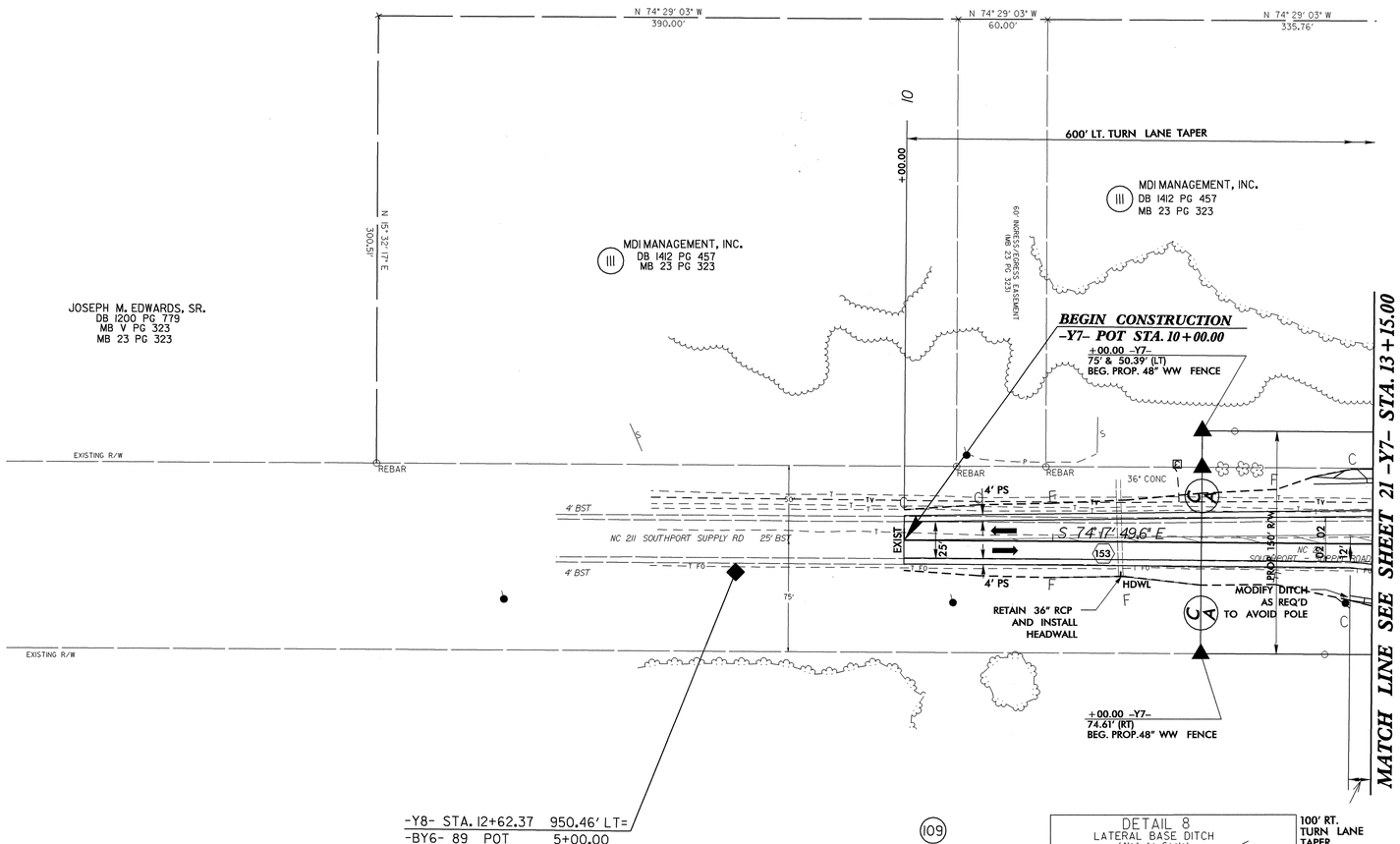

-Y7- STA 13+00 RT to -Y7- STA 17+96 RT B=3'
-Y7- STA 12+75 LT to -Y7- STA 16+00 LT B=3'
-Y7- STA 19+14 LT to -Y7- STA 23+88 LT B=2'

NOTES:

1) FOR -Y7- PROFILE SEE SHEET 38.

12-JAN-2007 10:32
r:\roadway\proj\r2245_rdy_psh22.dgn
$$$$USERNAME$$$$

PROJECT REFERENCE NO.	SHEET NO.
R-2245	23
R/W SHEET NO.	
ROADWAY DESIGN ENGINEER	HYDRAULICS ENGINEER

NORTH CAROLINA PROFESSIONAL SEAL 22924 ENGINEER GLENN W. MUMFORD 1/17/07

NORTH CAROLINA PROFESSIONAL SEAL 19775 ENGINEER RAY D. LOWINGOOD 22 JAN 07

REVISIONS

8/17/99

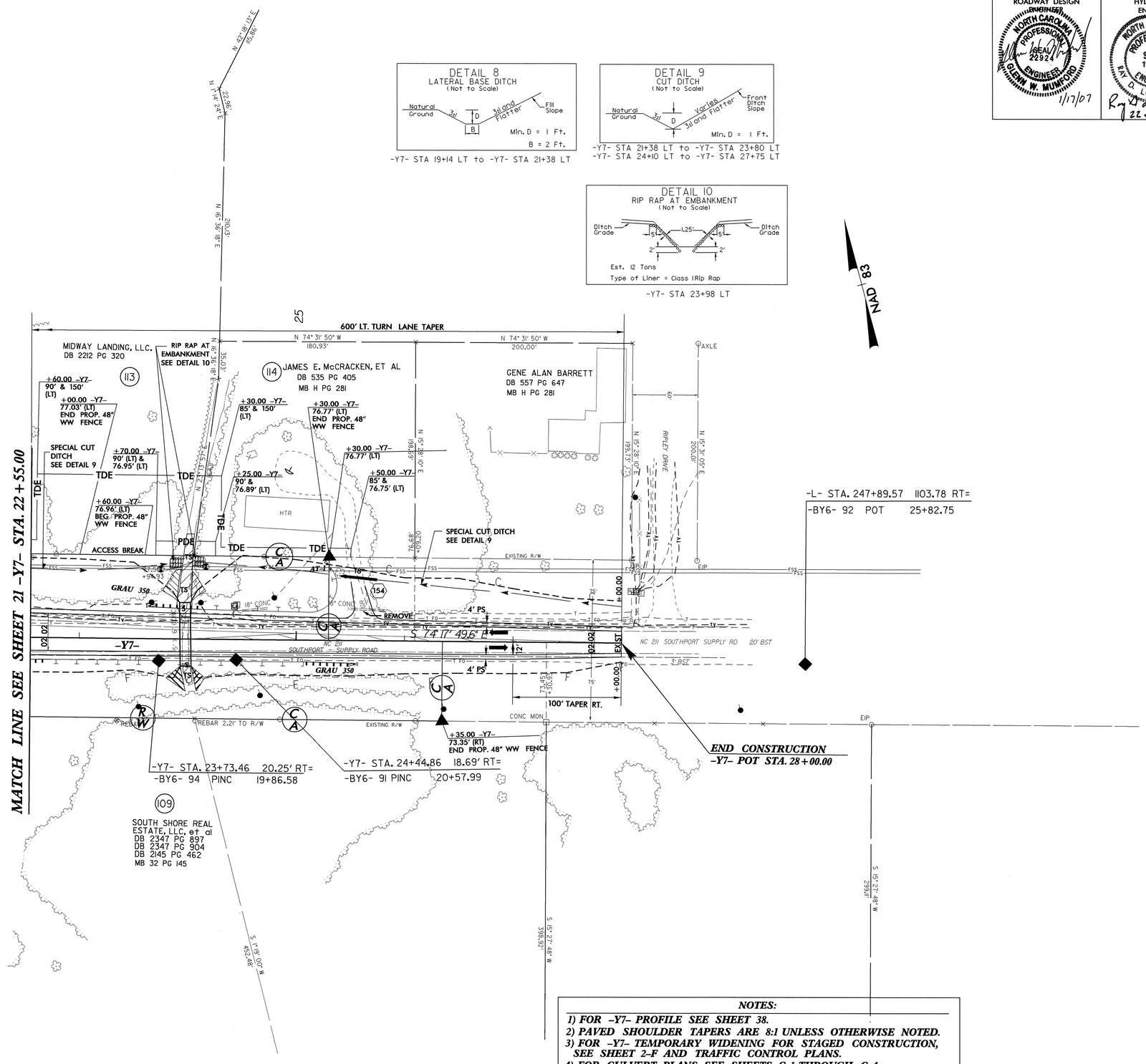

NOTES:

1) FOR -Y7- PROFILE SEE SHEET 38.
2) PAVED SHOULDER TAPERS ARE 8:1 UNLESS OTHERWISE NOTED.
3) FOR -Y7- TEMPORARY WIDENING FOR STAGED CONSTRUCTION, SEE SHEET 2-F AND TRAFFIC CONTROL PLANS.
4) FOR CULVERT PLANS SEE SHEETS C-1 THROUGH C-4.
5) USE ALTERNATIVE SPACING FOR GUARDRAIL INSTALLATION OVER CULVERT

22-JAN-2007 12:16
F:\roadway\proj\r2245_rdy_psh23.dgn
$$$$USERNAME$$$$

PROJECT REFERENCE NO.	SHEET NO.
R-2245	26
R/W SHEET NO.	
ROADWAY DESIGN ENGINEER	

NORTH CAROLINA PROFESSIONAL SEAL 22924 ENGINEER GLENN W. MUMFORD 1/17/07

NORTH CAROLINA PROFESSIONAL SEAL 19775 ENGINEER RAY D. LOWINGOOD 19 JAN 07

REVISIONS

8/17/99

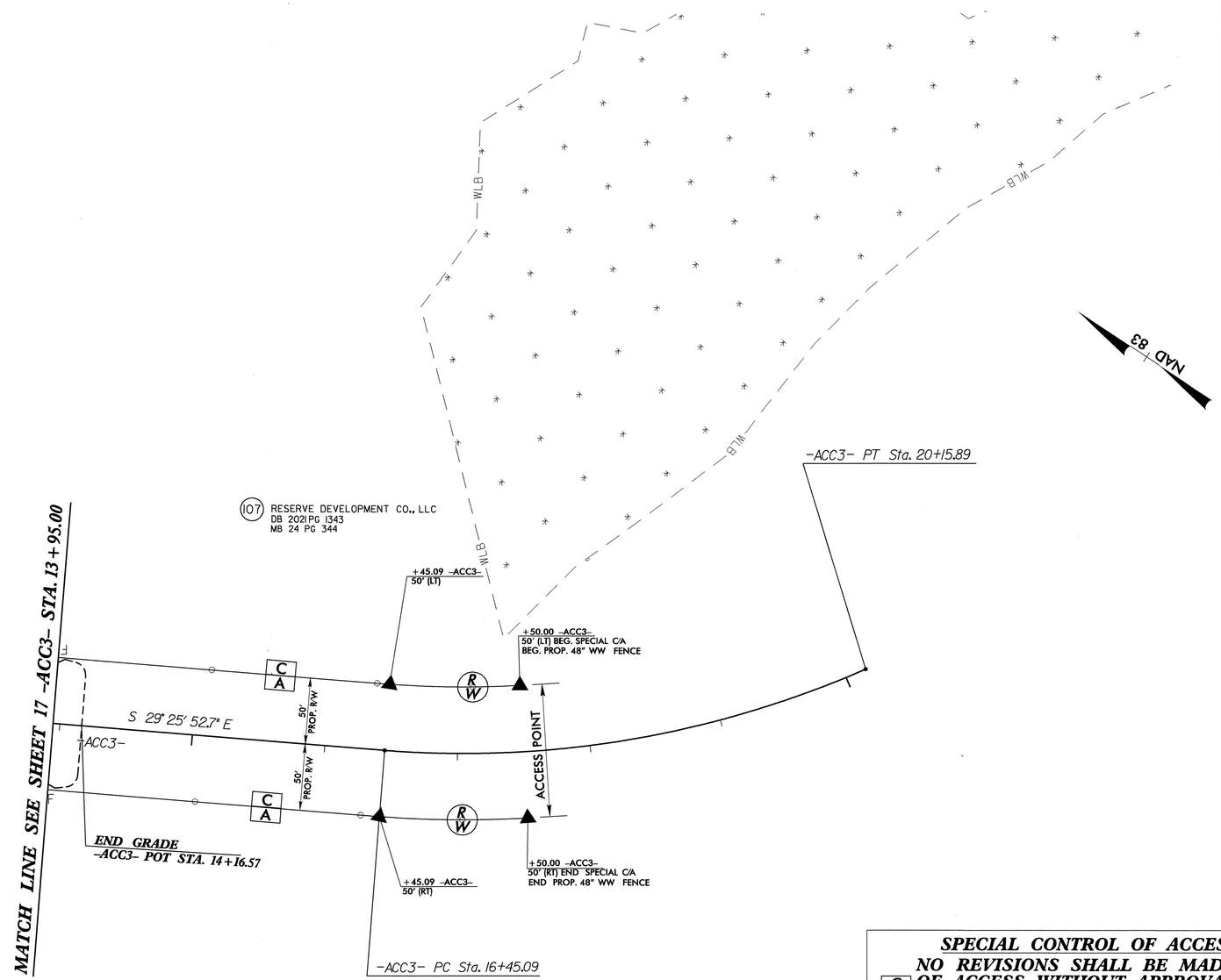

-ACC3-

PI Sta 18+34.36
Δ = 28° 19' 36.4" (LT)
D = 7° 38' 22.0"
L = 370.80'
T = 189.27'
R = 750.00'

(107) RESERVE DEVELOPMENT CO., LLC
DB 2021PG 1343
MB 24 PG 344

15

SPECIAL CONTROL OF ACCESS DESIGNATION

C A ***NO REVISIONS SHALL BE MADE TO THE CONTROL OF ACCESS WITHOUT APPROVAL OF NCDOT, FHWA AND NCDENR PER AGREEMENT AND USACE PER PERMIT CONDITON.***

20

NOTE:

1) ACCESS ROAD TO BE CONSTRUCTED BY OTHERS.
2) FOR -ACC3- PROFILE SEE SHEET 39.

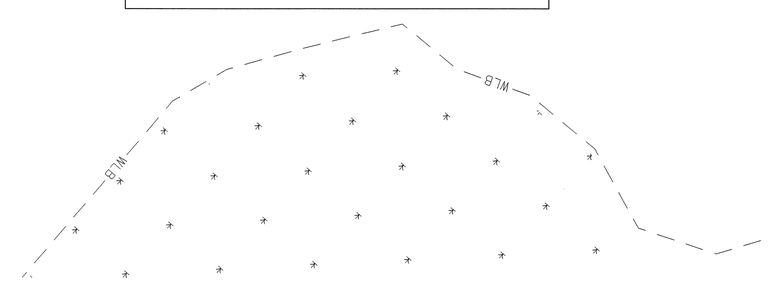

18-JAN-2007 13:01
r:\roadway\proj\r2245_rdy_psh26.dgn
$$$$USERNAME$$$$

PROJECT REFERENCE NO.	SHEET NO.
R-2245	27

ROADWAY DESIGN ENGINEER

NORTH CAROLINA PROFESSIONAL SEAL 22924 ENGINEER GLENN W. MUMFORD 1/17/07

HYDRAULICS ENGINEER

NORTH CAROLINA PROFESSIONAL SEAL 19776 ENGINEER RAY D. LOVINGGOOD 22 JAN 07

STRUCTURE HYDRAULIC DATA

DESIGN DISCHARGE	= N/A	CFS
DESIGN FREQUENCY	= 10	YRS
DESIGN HW ELEVATION	= 6.9	FT
BASE DISCHARGE	= N/A	CFS
BASE FREQUENCY	= 100	YRS
BASE HW ELEVATION	= 12.3	FT
OVERTOPPING DISCHARGE	= N/A	CFS
OVERTOPPING FREQUENCY	= 10	YRS
OVERTOPPING ELEVATION	= 7.3	FT

℄ EL = 19.78'
℄ STATION 21+50.00 -L-
3 SPAN BRIDGE w/ 21" CORED SLABS
TOTAL LENGTH = 165'
SPAN 1 = 55'
SPAN 2 = 55'
SPAN 3 = 55'

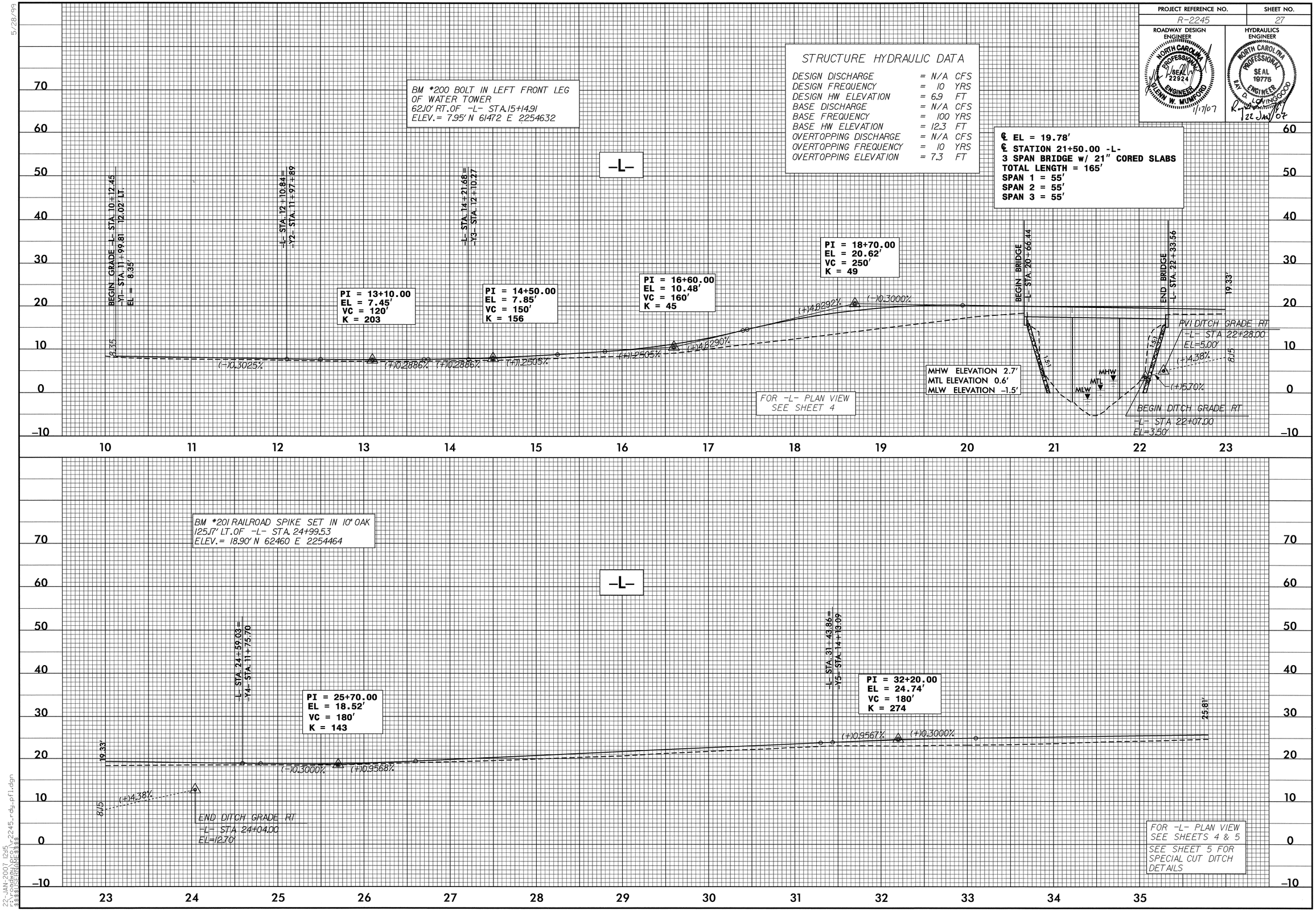

5/28/99

22-JAN-2007 12:15
F:\roadway\proj\r2245_rdy_pfl.dgn
$$$$USERNAME$$$$

5/28/99

PROJECT REFERENCE NO.	SHEET NO.
R-2245	28

ROADWAY DESIGN ENGINEER
NORTH CAROLINA PROFESSIONAL SEAL 22924 ENGINEER GLENN W. MUMFORD
1/17/07

HYDRAULICS ENGINEER
NORTH CAROLINA PROFESSIONAL SEAL 19775 ENGINEER RAY D. LOVINGGOOD
22 JAN 07

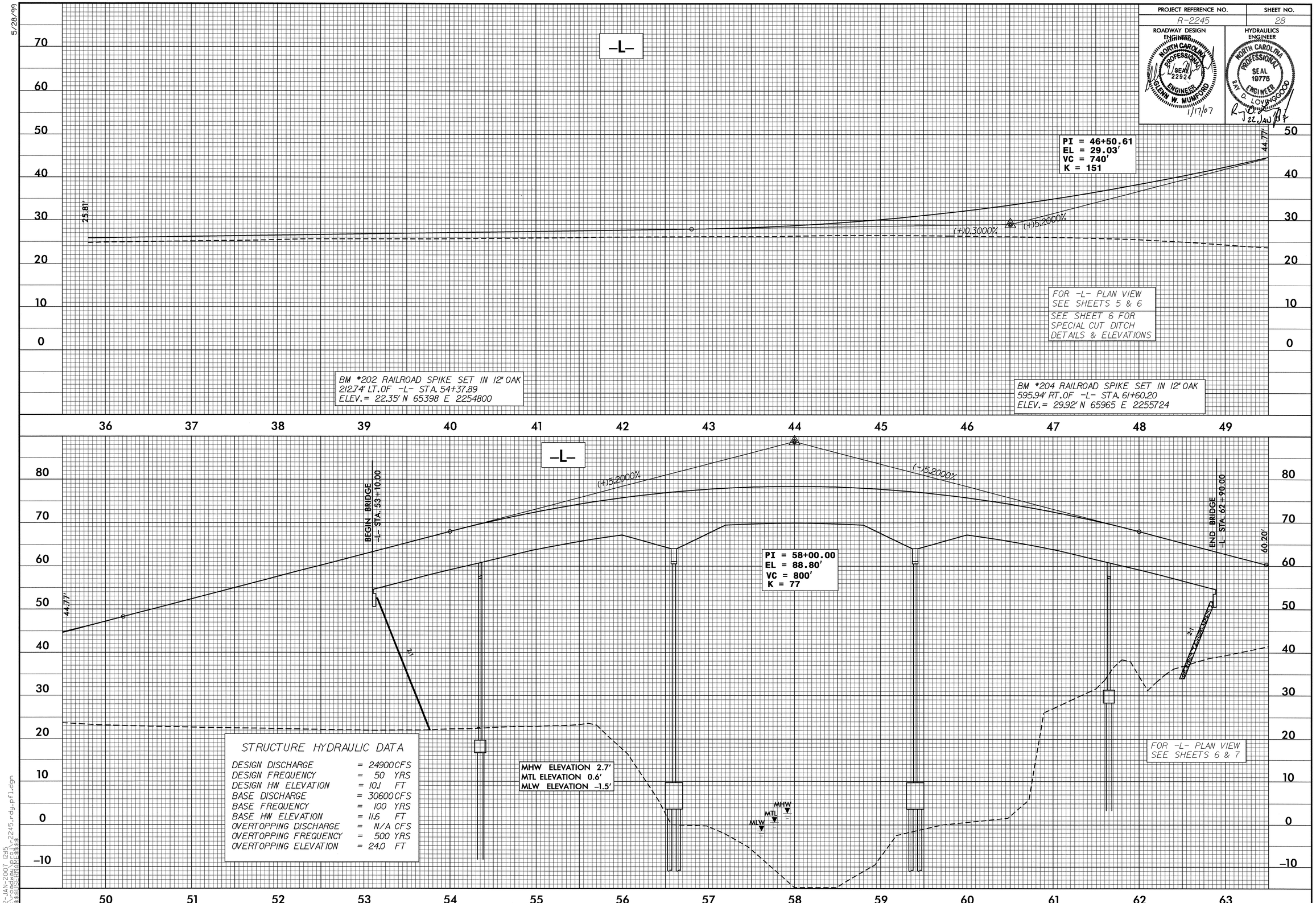

STRUCTURE HYDRAULIC DATA

DESIGN DISCHARGE	= 24900	CFS
DESIGN FREQUENCY	= 50	YRS
DESIGN HW ELEVATION	= 10.1	FT
BASE DISCHARGE	= 30600	CFS
BASE FREQUENCY	= 100	YRS
BASE HW ELEVATION	= 11.6	FT
OVERTOPPING DISCHARGE	= N/A	CFS
OVERTOPPING FREQUENCY	= 500	YRS
OVERTOPPING ELEVATION	= 24.0	FT

22-JAN-2007 12:15
f:\roadway\proj\r2245_rdy_pfl.dgn
$$$$USERNAME$$$$

PROJECT REFERENCE NO.	SHEET NO.
R-2245	29

ROADWAY DESIGN ENGINEER
NORTH CAROLINA PROFESSIONAL SEAL 22924 ENGINEER GLENN W. MUMFORD
1/17/07

HYDRAULICS ENGINEER
NORTH CAROLINA PROFESSIONAL SEAL 19776 ENGINEER RAY A. LOVINGGOOD
19 JAN 07

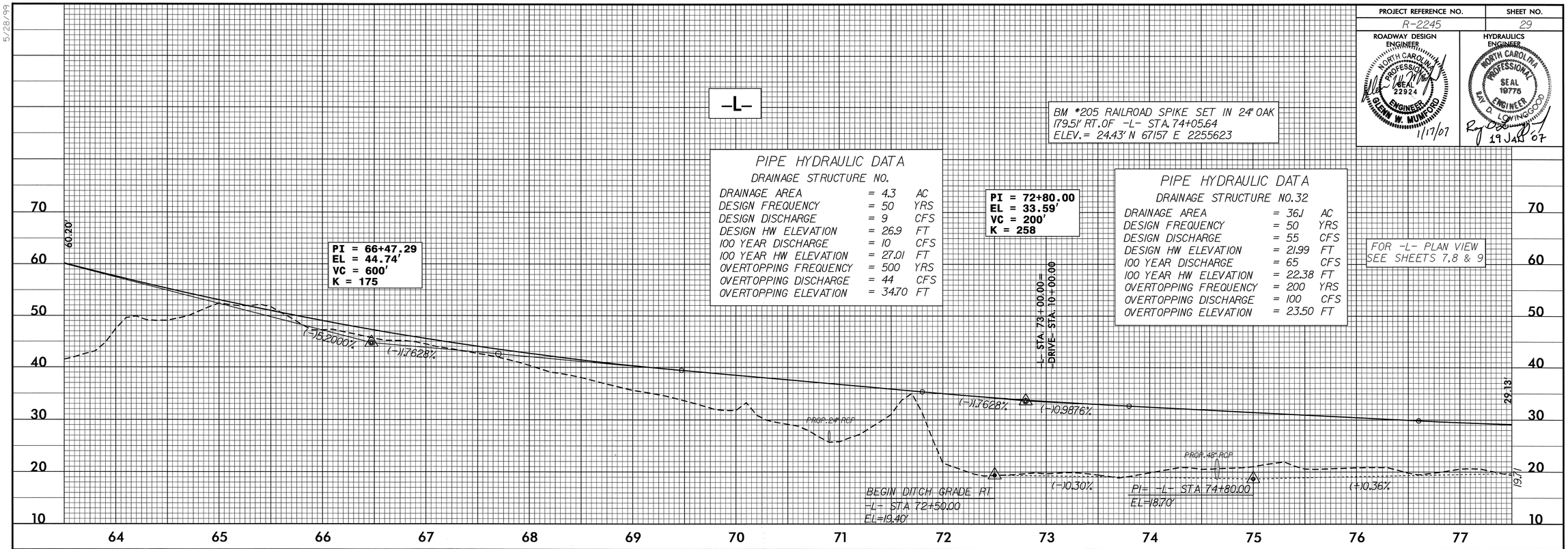

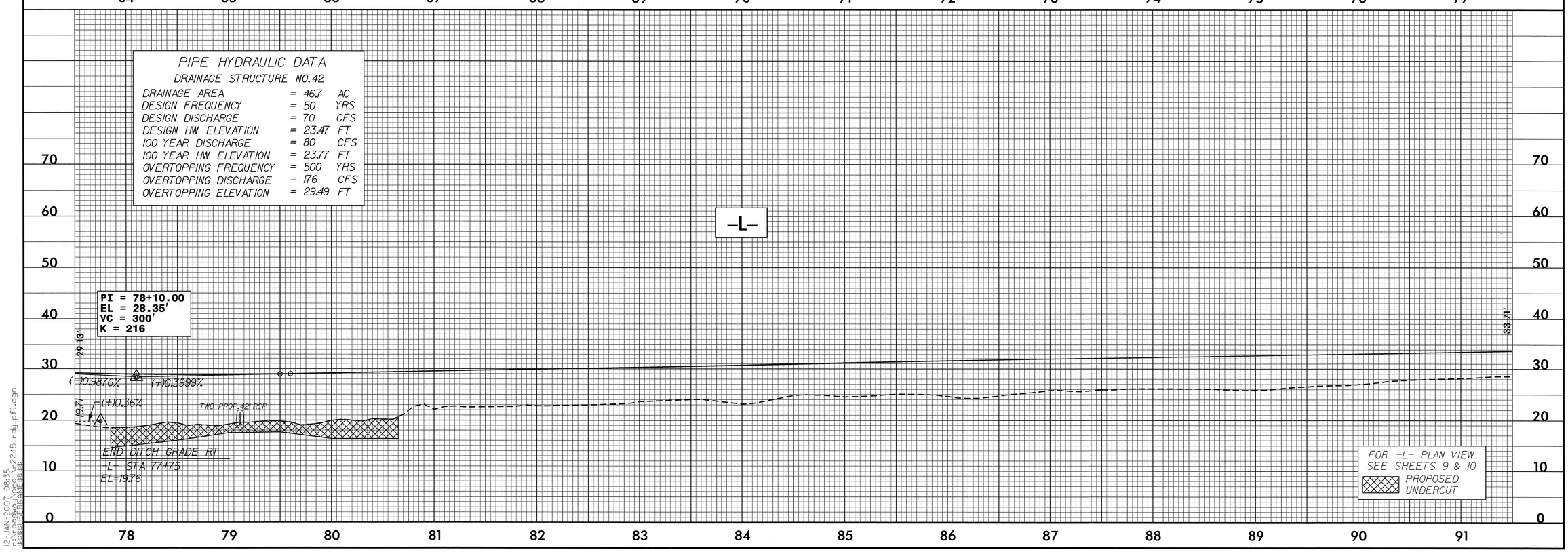

12-JAN-2007 08:35
f:\roadway\proj\r2245_rdy_pfl.dgn
$$$$USERNAME$$$$

PROJECT REFERENCE NO.	SHEET NO.
R-2245	30

ROADWAY DESIGN ENGINEER — NORTH CAROLINA PROFESSIONAL SEAL 22924 ENGINEER GLENN W. MUMFORD — 1/17/07

HYDRAULICS ENGINEER — NORTH CAROLINA PROFESSIONAL SEAL 19776 ENGINEER RAY D. DOWNINGGOOD — 22 JAN 07

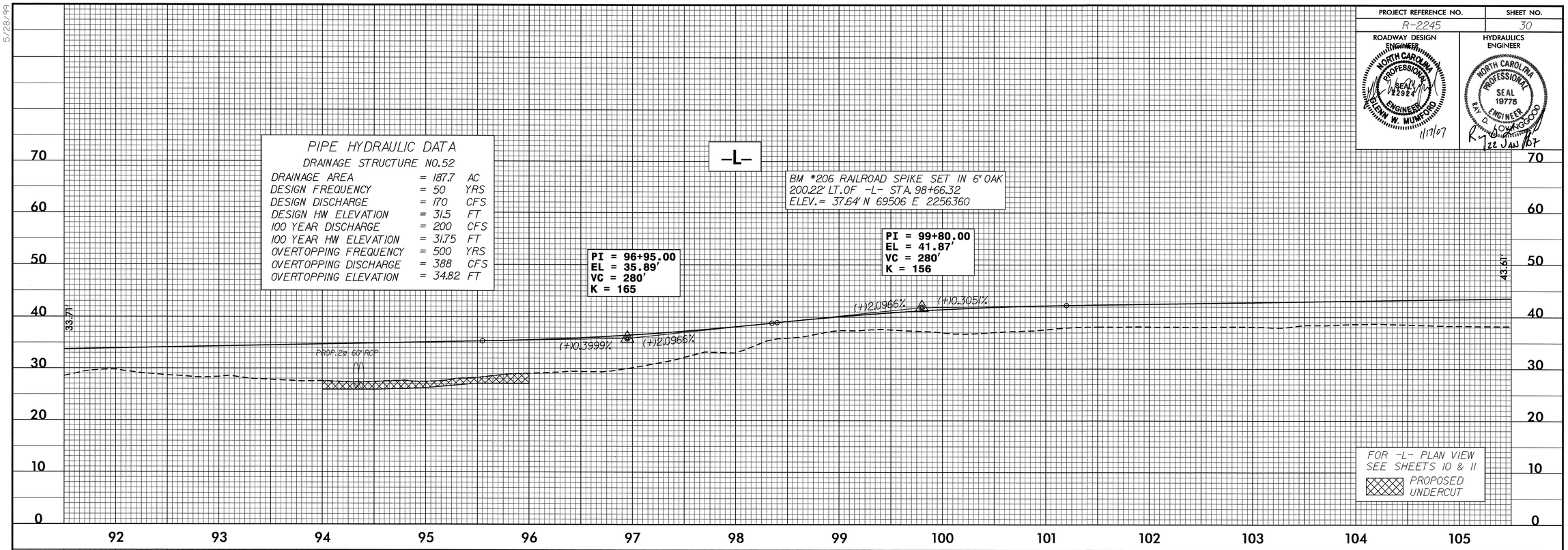

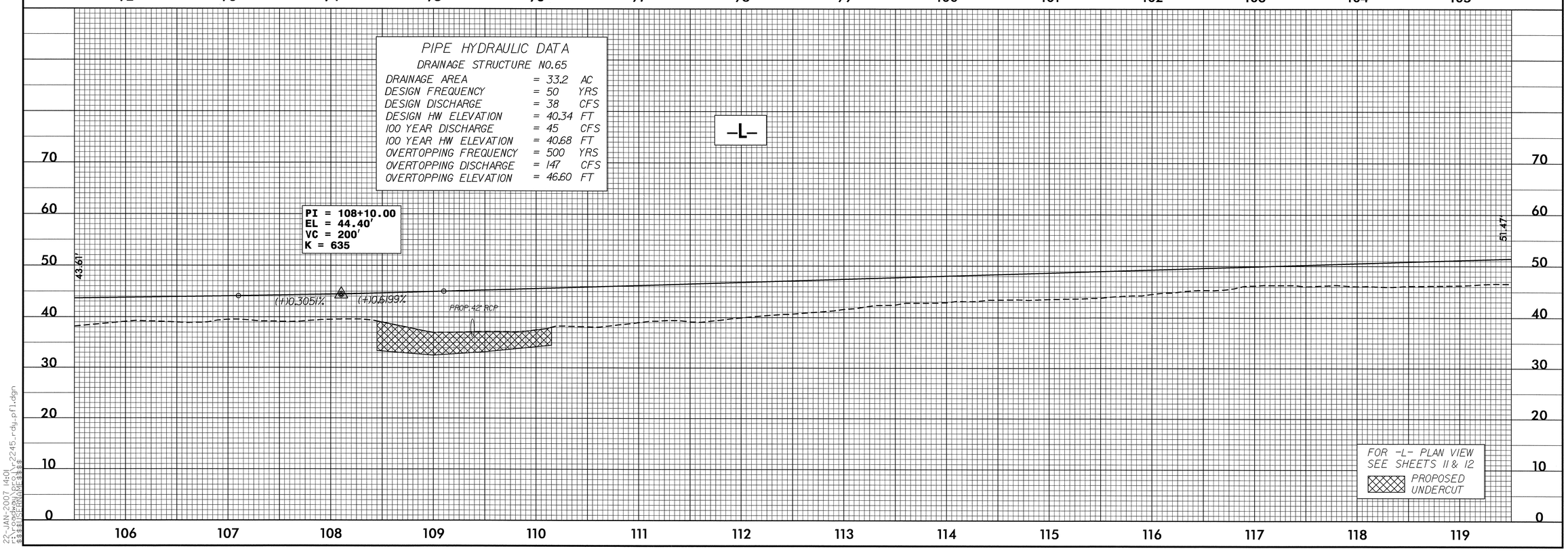

5/28/99

22-JAN-2007 14:01
f:\roadway\proj\r2245_rdy_pfl.dgn
$$$$USERNAME$$$$

PROJECT REFERENCE NO.	SHEET NO.
R-2245	31

ROADWAY DESIGN ENGINEER
NORTH CAROLINA PROFESSIONAL SEAL 22924 ENGINEER GLENN W. MUMFORD
1/17/07

HYDRAULICS ENGINEER
NORTH CAROLINA PROFESSIONAL SEAL 19776 ENGINEER RAY D. LOVINGGOOD
Ray Lovinggood 19 JAN 07

PIPE HYDRAULIC DATA

DRAINAGE STRUCTURE NO.69

DRAINAGE AREA	=	31.9	AC
DESIGN FREQUENCY	=	50	YRS
DESIGN DISCHARGE	=	30	CFS
DESIGN HW ELEVATION	=	44.91	FT
100 YEAR DISCHARGE	=	36	CFS
100 YEAR HW ELEVATION	=	45.19	FT
OVERTOPPING FREQUENCY	=	200	YRS
OVERTOPPING DISCHARGE	=	56	CFS
OVERTOPPING ELEVATION	=	46	FT

BM *207 RAILROAD SPIKE SET IN 12" PINE
416.14' RT. OF -L- STA. 122+20.89
ELEV. = 48.68' N 711578 E 2258136

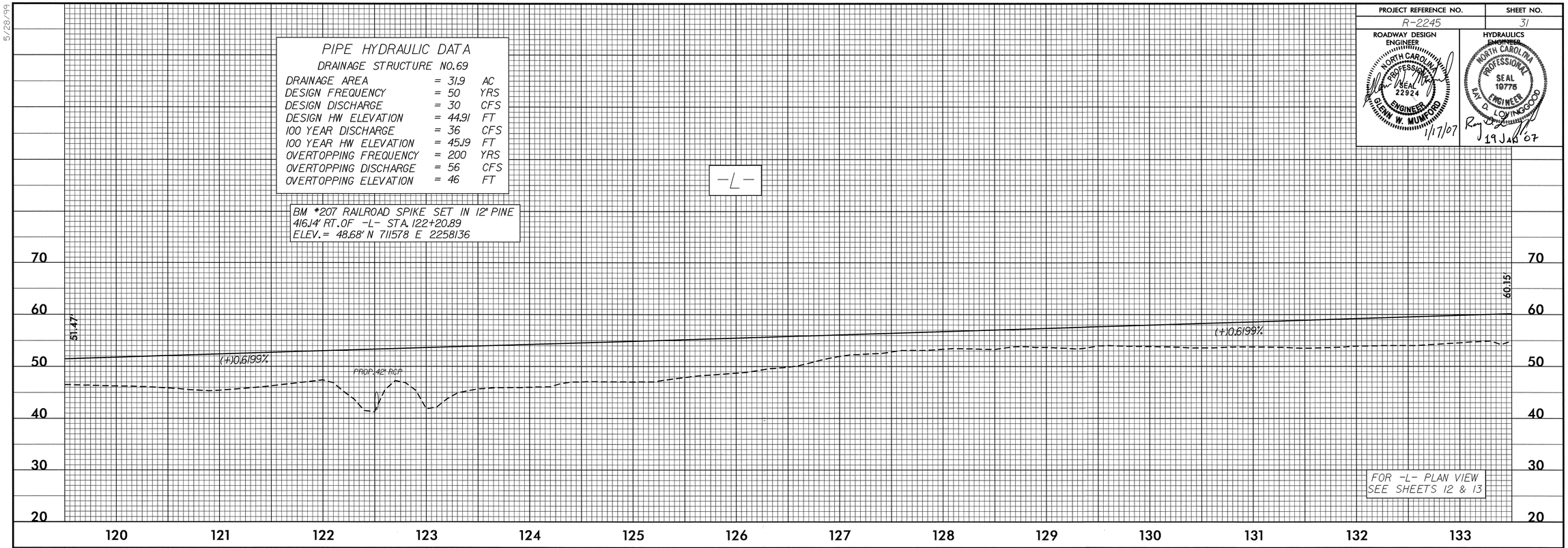

FOR -L- PLAN VIEW SEE SHEETS 12 & 13

BM *208 RAILROAD SPIKE SET IN 14" PINE
202.78' LT. OF -L- STA. 140+04.30
ELEV. = 56.54' N 72969 E 2258553

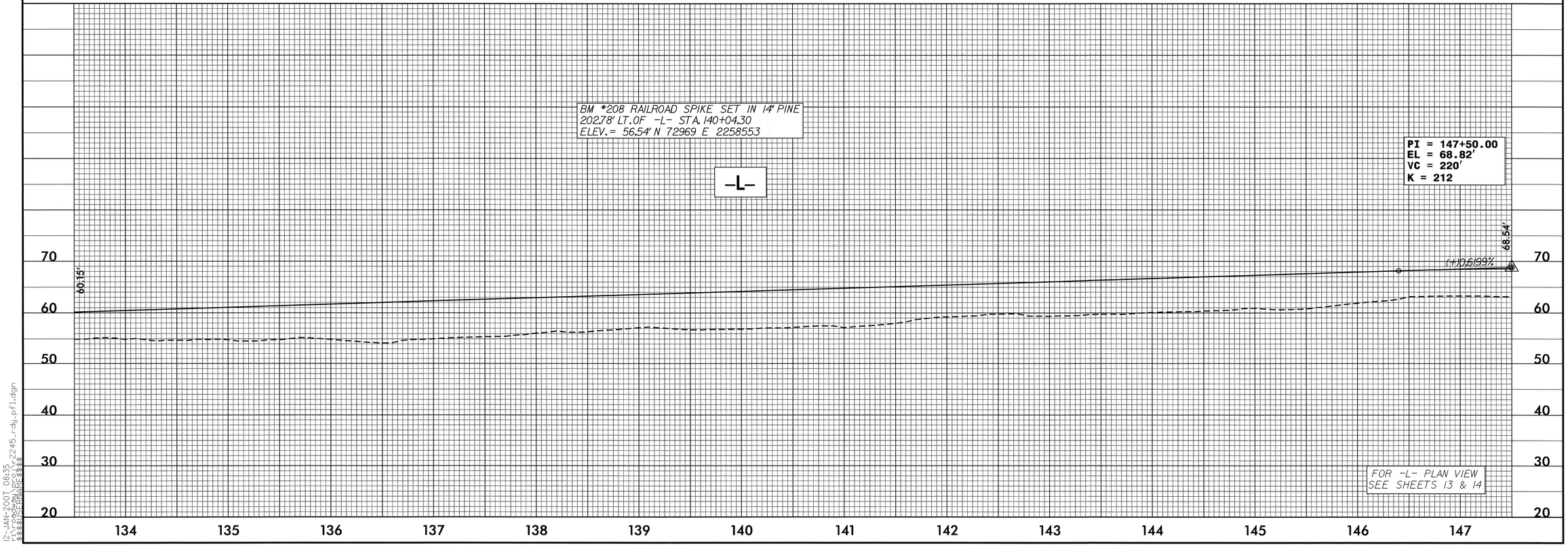

FOR -L- PLAN VIEW SEE SHEETS 13 & 14

5/28/99

12-JAN-2007 08:35
f:\roadway\proj\r2245_rdy_pfl.dgn
$$$$USERNAME$$$$

PROJECT REFERENCE NO.	SHEET NO.
R-2245	32

ROADWAY DESIGN ENGINEER
NORTH CAROLINA PROFESSIONAL SEAL 22924 ENGINEER GLENN W. MUMFORD
1/17/07

HYDRAULICS ENGINEER
NORTH CAROLINA PROFESSIONAL SEAL 19775 ENGINEER RAY D. LEVINGGOOD
19 JAN 07

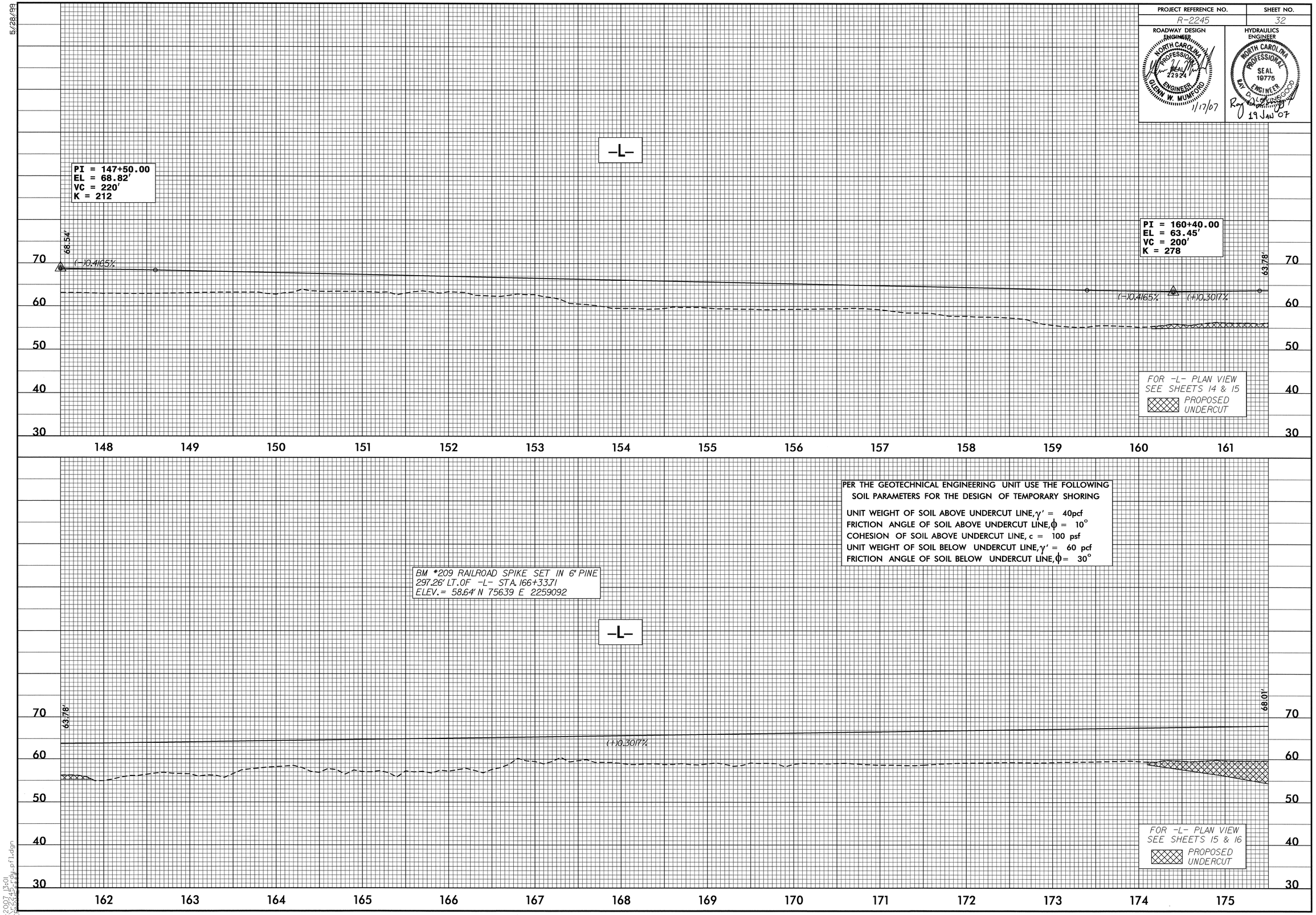

5/28/99

JAN-2007 13:01
pro\r2245_rdy_pfl.dgn
$USERNAME$

PROJECT REFERENCE NO.	SHEET NO.
R-2245	33

ROADWAY DESIGN ENGINEER: NORTH CAROLINA PROFESSIONAL SEAL 22924 ENGINEER GLENN W. MUMFORD 1/17/07

HYDRAULICS ENGINEER: NORTH CAROLINA PROFESSIONAL SEAL 19775 ENGINEER RAY D. SONGWOOD 19 JAN 07

PER THE GEOTECHNICAL ENGINEERING UNIT USE THE FOLLOWING SOIL PARAMETERS FOR THE DESIGN OF TEMPORARY SHORING

UNIT WEIGHT OF SOIL ABOVE UNDERCUT LINE, γ' = 40pcf
FRICTION ANGLE OF SOIL ABOVE UNDERCUT LINE, ϕ = 10°
COHESION OF SOIL ABOVE UNDERCUT LINE, c = 100 psf
UNIT WEIGHT OF SOIL BELOW UNDERCUT LINE, γ' = 60 pcf
FRICTION ANGLE OF SOIL BELOW UNDERCUT LINE, ϕ = 30°

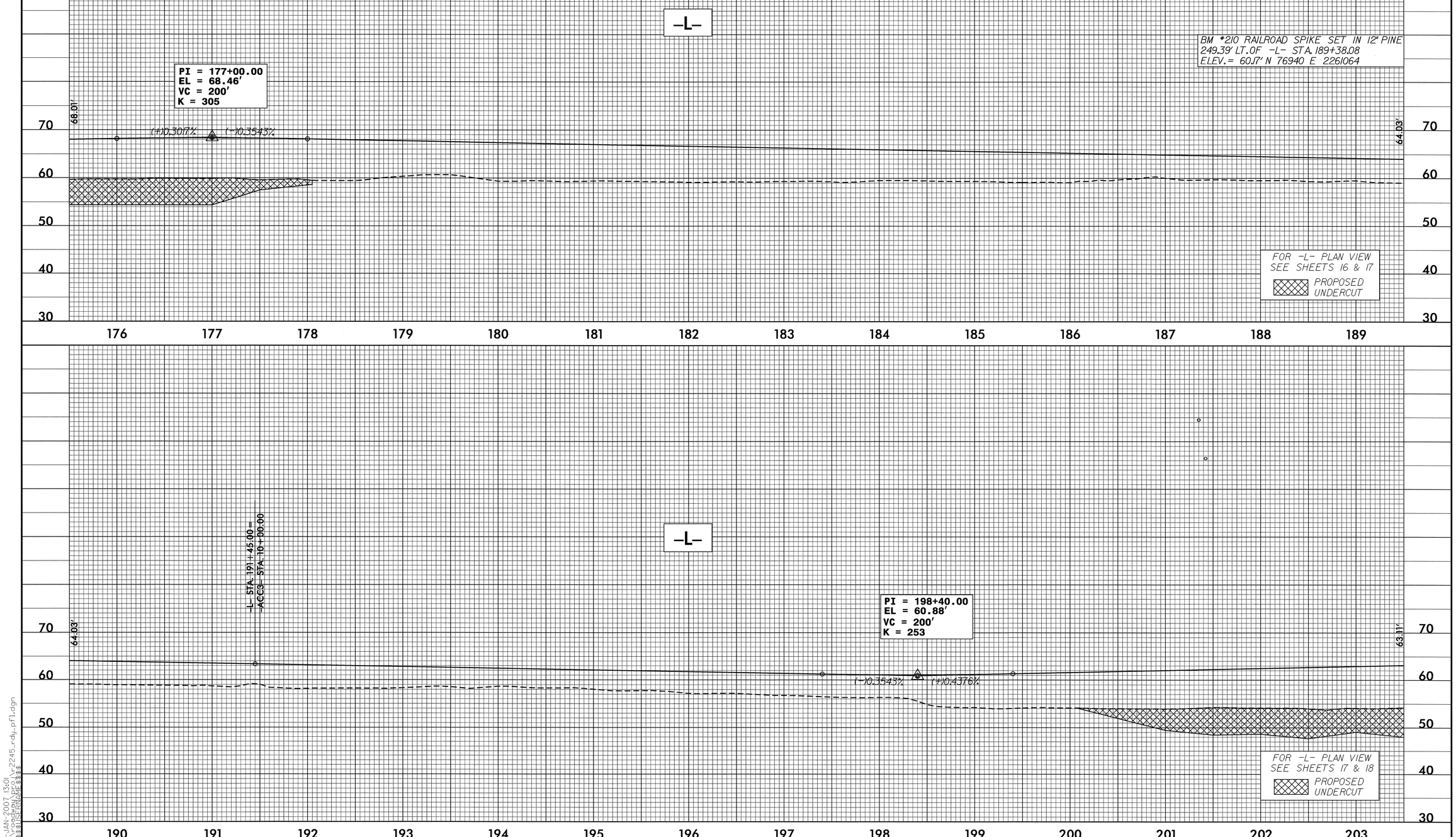

18-JAN-2007 13:01
r:\roadway\proj\r2245_rdy_pfl.dgn
$$$$USERNAME$$$$

PROJECT REFERENCE NO.	SHEET NO.
R-2245	34

ROADWAY DESIGN ENGINEER: NORTH CAROLINA PROFESSIONAL SEAL 22924 ENGINEER GLENN W. MUMFORD 1/17/07

HYDRAULICS ENGINEER: NORTH CAROLINA PROFESSIONAL SEAL 19775 ENGINEER RAY D. GOLDINGGOOD 19 JAN 07

PER THE GEOTECHNICAL ENGINEERING UNIT USE THE FOLLOWING SOIL PARAMETERS FOR THE DESIGN OF TEMPORARY SHORING

UNIT WEIGHT OF SOIL ABOVE UNDERCUT LINE, γ' = 40pcf
FRICTION ANGLE OF SOIL ABOVE UNDERCUT LINE, ϕ = 10°
COHESION OF SOIL ABOVE UNDERCUT LINE, c = 100 psf
UNIT WEIGHT OF SOIL BELOW UNDERCUT LINE, γ' = 60 pcf
FRICTION ANGLE OF SOIL BELOW UNDERCUT LINE, ϕ = 30°

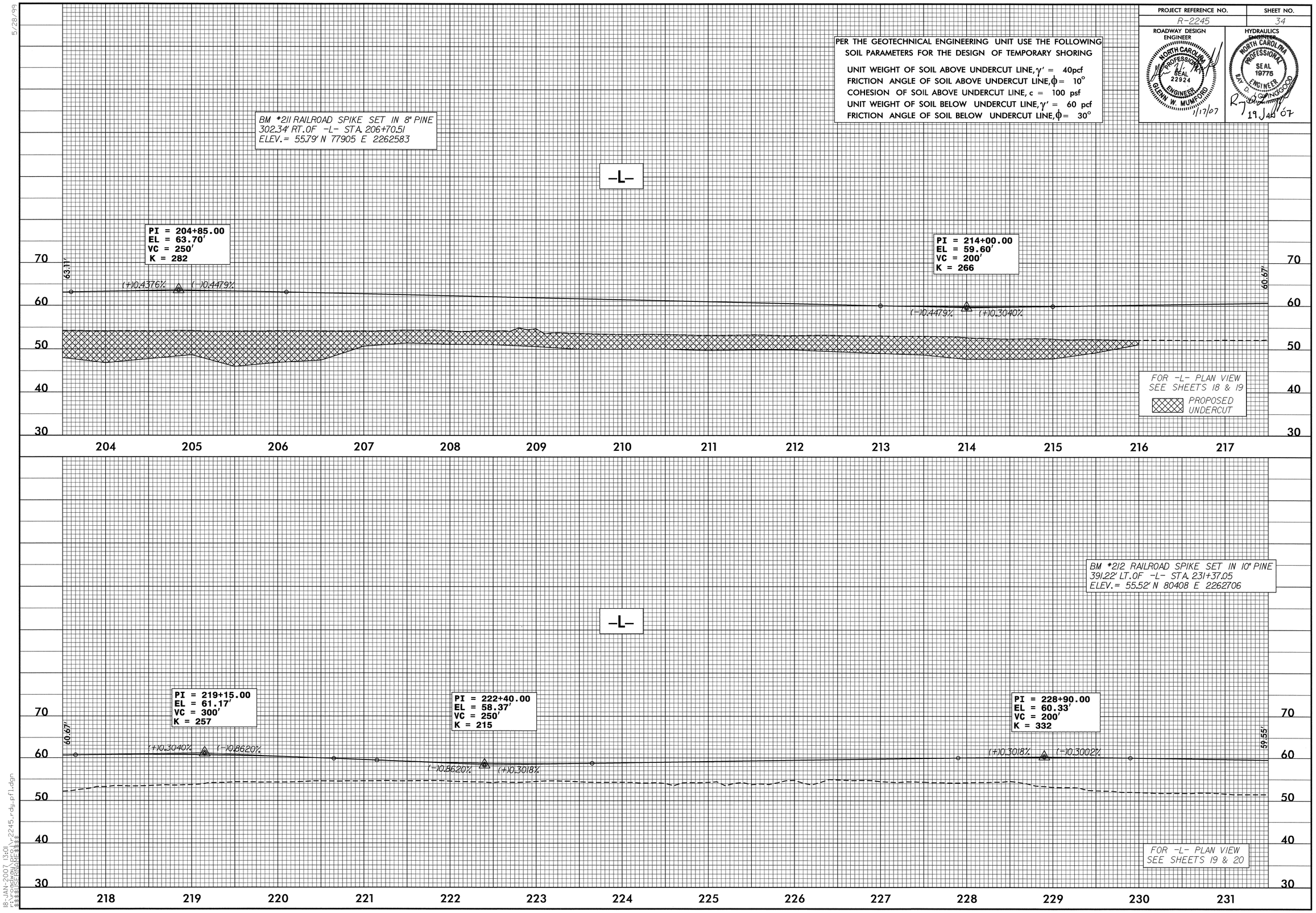

5/28/99

18-JAN-2007 13:01
r:\roadway\proj\r2245_rdy_pfl.dgn
$$$$USERNAME$$$$

PROJECT REFERENCE NO.	SHEET NO.
R-2245	35

ROADWAY DESIGN ENGINEER
NORTH CAROLINA PROFESSIONAL SEAL 22924 ENGINEER GLENN W. MUMFORD
1/17/07

HYDRAULICS ENGINEER
NORTH CAROLINA PROFESSIONAL SEAL 19775 ENGINEER RAY D. LOVINGGOOD
22 JAN 07

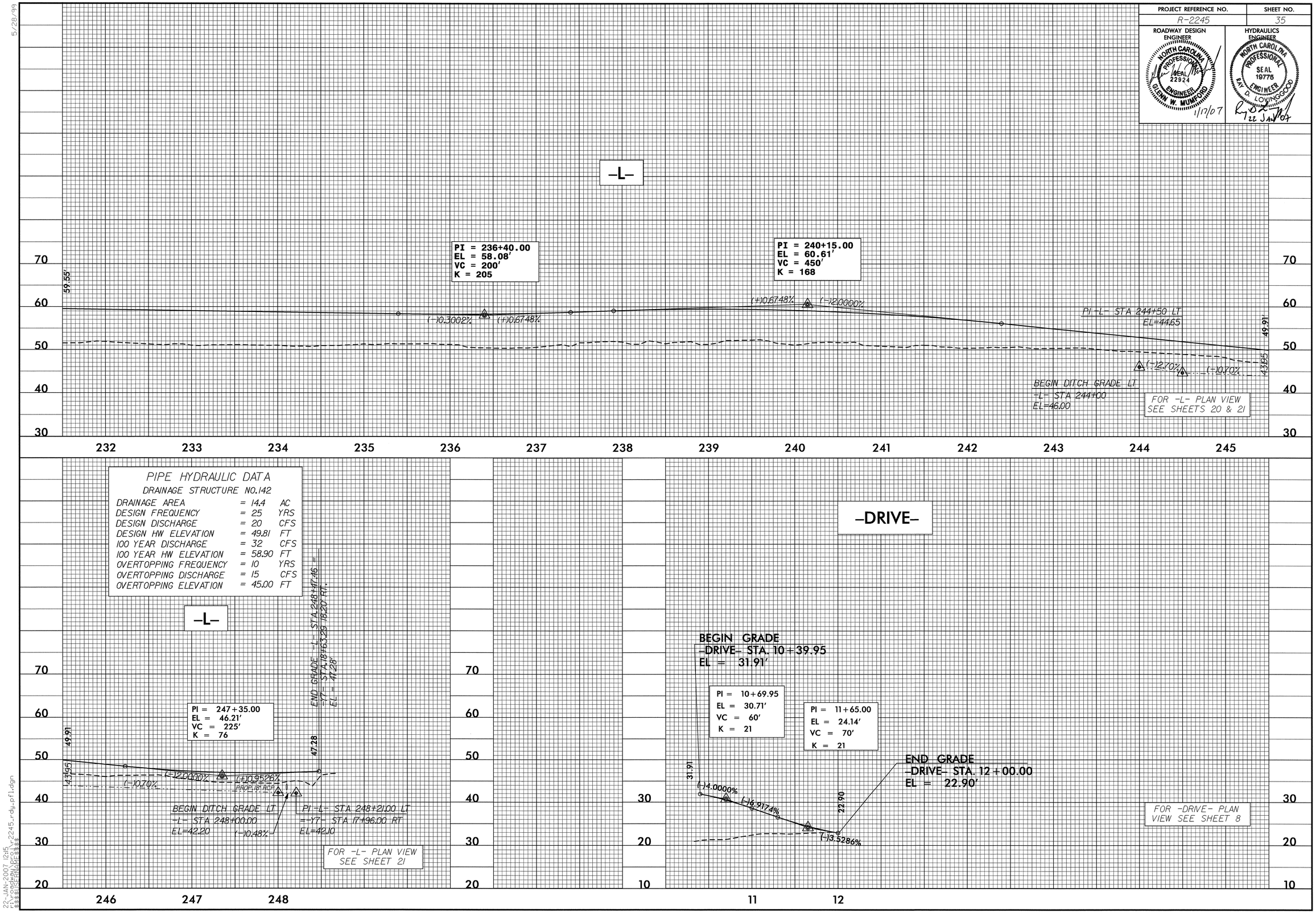

22-JAN-2007 12:15
r:\roadway\proj\r2245_rdy_pfl.dgn
$$$$USERNAME$$$$

PROJECT REFERENCE NO.	SHEET NO.
R-2245	36

ROADWAY DESIGN ENGINEER

NORTH CAROLINA PROFESSIONAL SEAL 22924 ENGINEER GLENN W. MUMFORD

1/17/07

HYDRAULICS ENGINEER

NORTH CAROLINA PROFESSIONAL SEAL 19775 ENGINEER RAY D. LOVINGGOOD

19 JAN 07

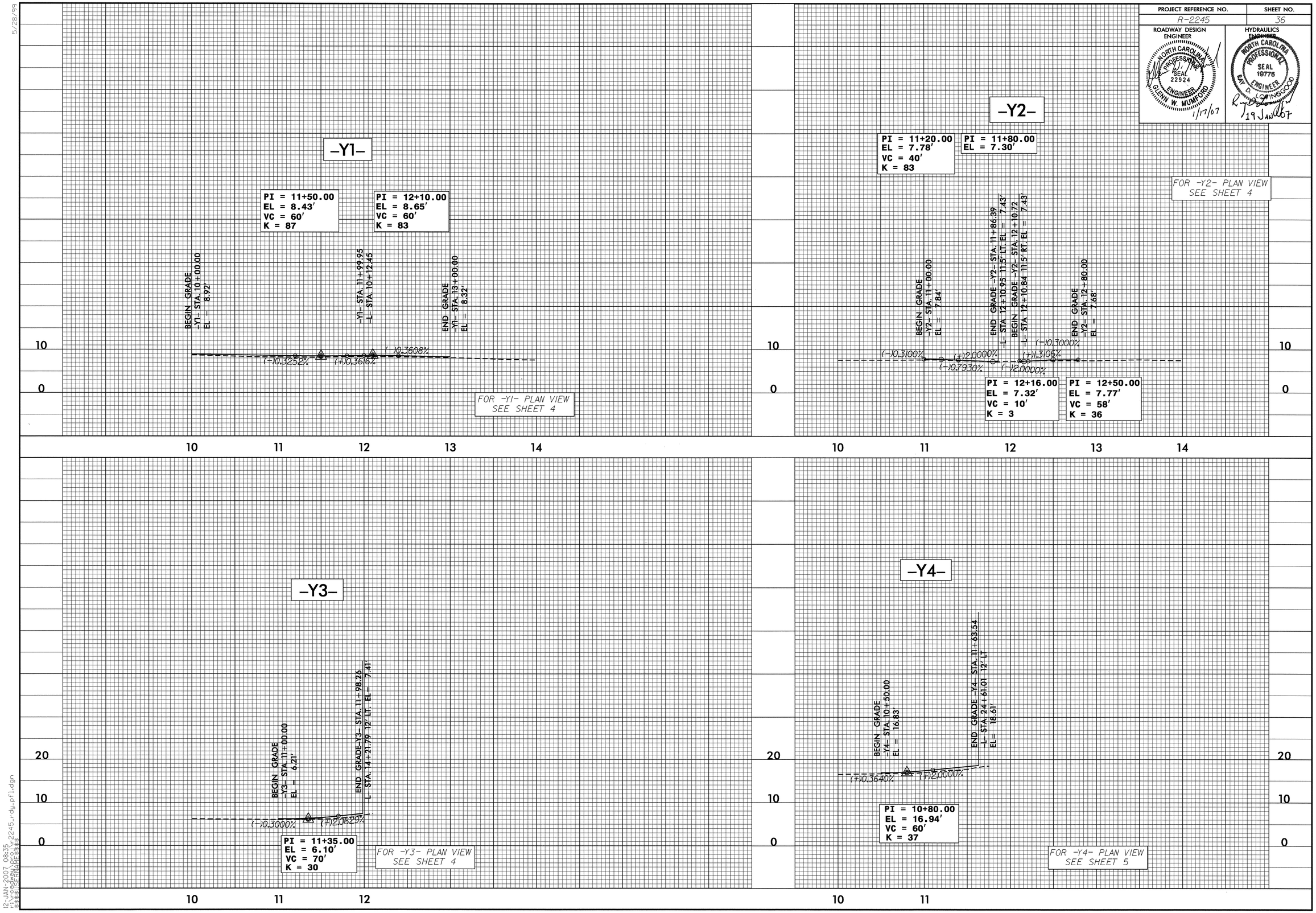

5/28/99

12-JAN-2007 08:35
r:\roadway\proj\r2245_rdy_pfl.dgn
$$$$USERNAME$$$$

5/28/99

PROJECT REFERENCE NO.	SHEET NO.
R-2245	37

ROADWAY DESIGN ENGINEER
NORTH CAROLINA PROFESSIONAL SEAL 22924 ENGINEER GLENN W. MUMFORD
1/17/07

HYDRAULICS ENGINEER
NORTH CAROLINA PROFESSIONAL SEAL 19775 ENGINEER RAY D. LOVINGGOOD
19 Jan 07

-Y5-

PI = 12+25.00
EL = 23.06'
VC = 150'
K = 110

PI = 13+40.00
EL = 24.98'
VC = 80'
K = 59

PI = 14+56.46
EL = 23.15'
VC = 14'
K = 6

PI = 15+20.00
EL = 23.39'
VC = 55'
K = 79

PI = 16+21.14
EL = 23.08'
VC = 50'
K = 99

BEGIN GRADE -Y5- STA. 11+20.00 EL = 22.75'

END GRADE -Y5- STA. 13+83.06 -L- STA. 31+42.95 24.61' LT EL = 25.11'

BEGIN GRADE -Y5- STA. 14+49.46 -L- STA. 31+45.31 36.34' RT. EL = 23.29'

END GRADE -Y5- STA. 17+21.27 EL = 23.27'

(+)0.3000% (+)0.3000% (+)1.6659% (-)2.7410% (-)2.0000% (+)0.3846% (-)0.3098% (+)0.1938%

30 20 10 0

10 11 12 13 14 15 16 17 18

FOR -Y5- PLAN VIEW SEE SHEET 5

-Y6-

BEGIN RESURFACING -Y6- STA. 10+20.00

END RESURFACING -Y6- STA. 13+50.00

30 20 10 0

10 11 12 13 14

FOR -Y6- PLAN VIEW SEE SHEET 7

12-JAN-2007 08:35
r:\roadway\proj\r2245_rdy_pfl.dgn
$$$$USERNAME$$$$

PROJECT REFERENCE NO.	SHEET NO.
R-2245	38

ROADWAY DESIGN ENGINEER — NORTH CAROLINA PROFESSIONAL SEAL 22924 ENGINEER GLENN W. MUMFORD — 1/17/07

HYDRAULICS ENGINEER — NORTH CAROLINA PROFESSIONAL SEAL 19775 ENGINEER RAY D. OVINGGOOD — 19 JAN 07

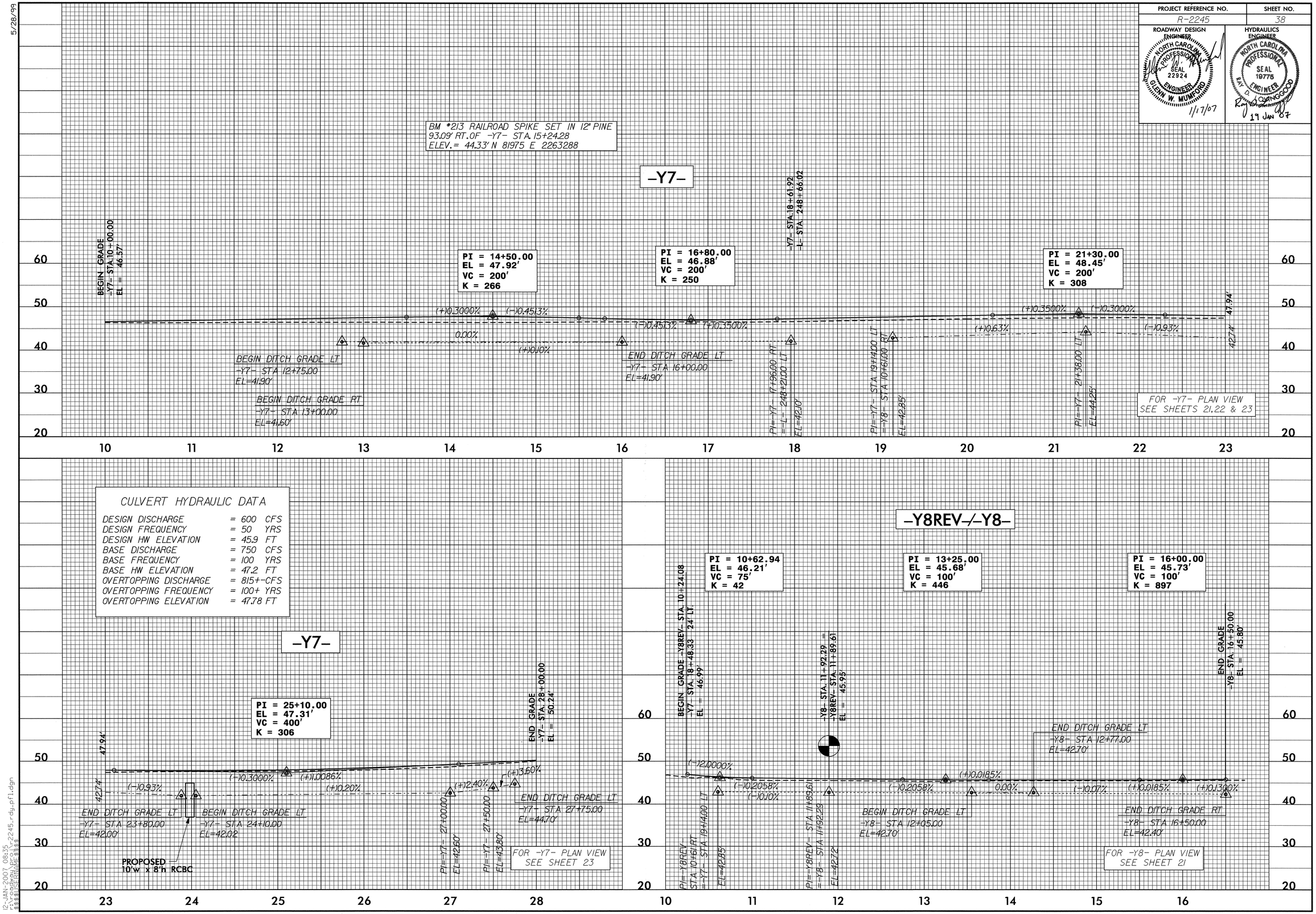

5/28/99

12-JAN-2007 08:35
r:\roadway\proj\r2245_rdy_pfl.dgn
$$$$USERNAME$$$$

PROJECT REFERENCE NO.	SHEET NO.
R-2245	39

ROADWAY DESIGN ENGINEER
NORTH CAROLINA PROFESSIONAL SEAL 22924 ENGINEER GLENN W. MUMFORD
1/17/07

HYDRAULICS ENGINEER
NORTH CAROLINA PROFESSIONAL SEAL 19775 ENGINEER RAY D. OLINGGOOD
19 JAN 07

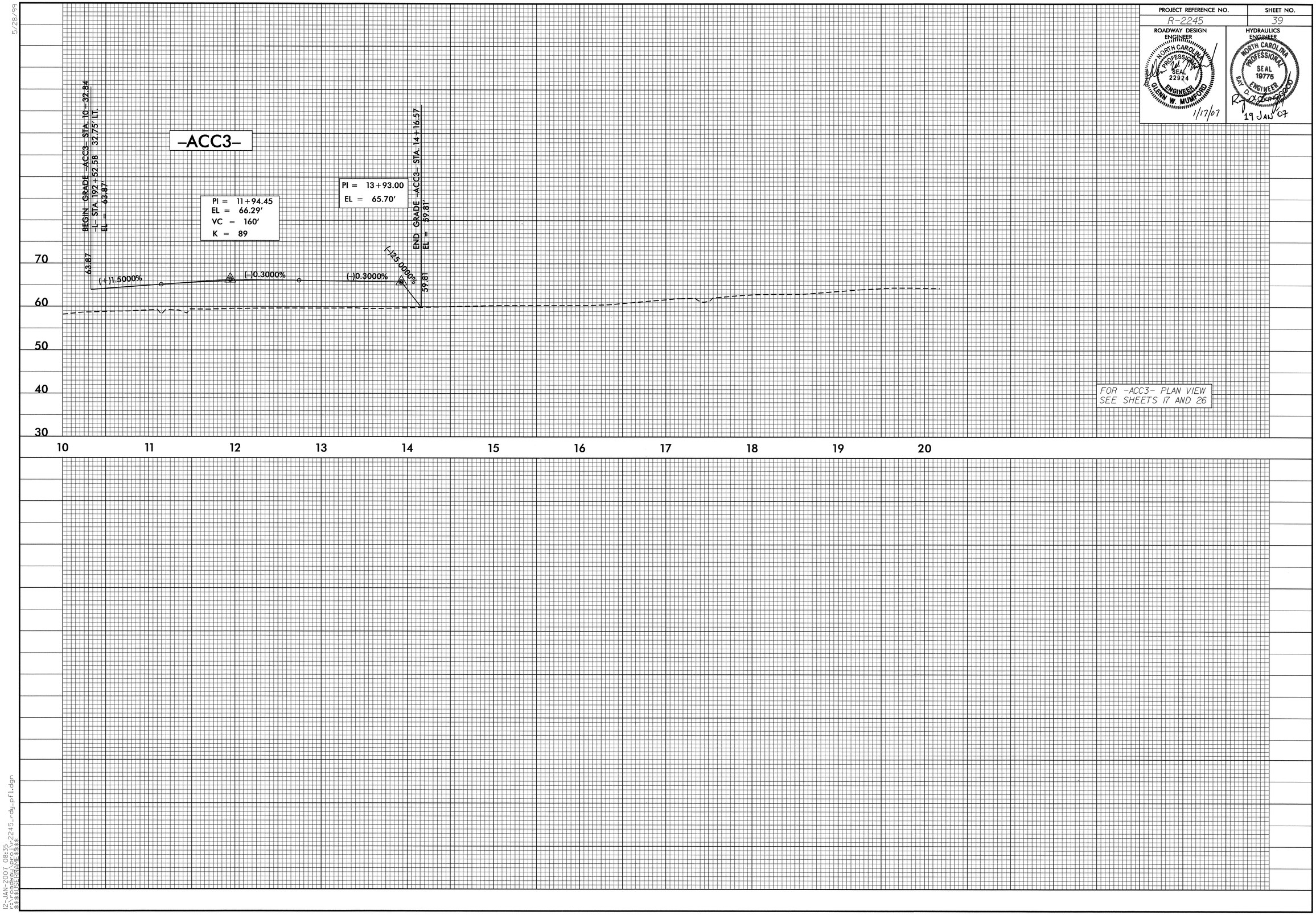

FOR -ACC3- PLAN VIEW
SEE SHEETS 17 AND 26

5/28/99

12-JAN-2007 08:35
r:\roadway\proj\r2245_rdy_pfl.dgn
$$$$USERNAME$$$$