09/08/99

TIP PROJECT: R-3415

CONTRACT: C201188

STATE	STATE PROJECT REFERENCE NO.	SHEET NO.	TOTAL SHEETS
N.C.	R-3415	1	

STATE PROJ. NO.	F.A. PROJ. NO.	DESCRIPTION
34541.1.1		P.E.
34541.2.1		R/W & UTILITIES
34541.3.2		CONSTR.

STATE OF NORTH CAROLINA
DIVISION OF HIGHWAYS

YADKIN COUNTY

LOCATION: NC 67 FROM SR 1355 (MESSICK ROAD) TO JUST WEST OF HOWARD AVENUE (N.S.) IN BOONVILLE

TYPE OF WORK: GRADING, DRAINAGE, WIDENING, PAVING, AND CULVERTS

See Sheet 1-A For Index of Sheets

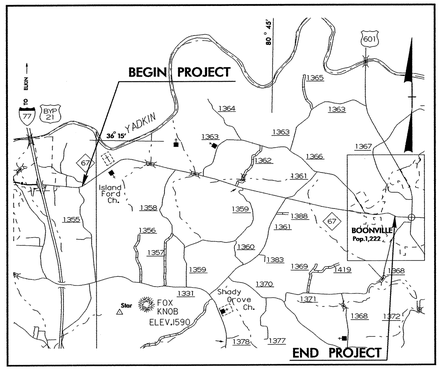

VICINITY MAP
(NO SCALE)

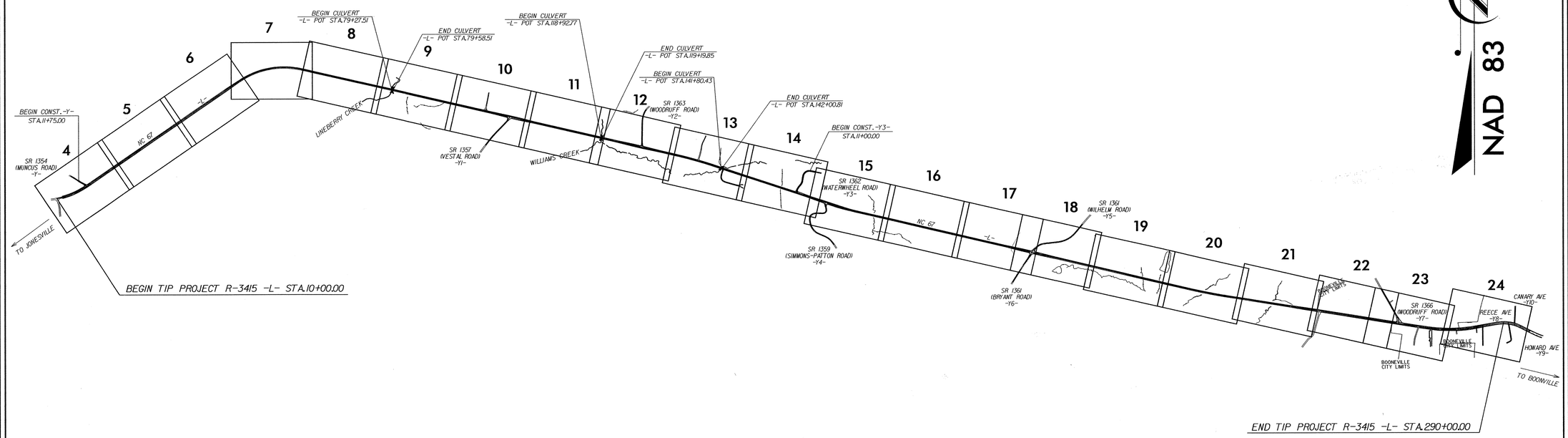

NAD 83

GRAPHIC SCALES

50 25 0 50 100
PLANS

50 25 0 50 100
PROFILE (HORIZONTAL)

10 5 0 10 20
PROFILE (VERTICAL)

DESIGN DATA

ADT 2000 = 7600
ADT 2025 = 13800
DHV = 10 %
D = 60 %
T = 5 % *
V = 50 MPH

* TTST 2% DUAL 3%

PROJECT LENGTH

LENGTH ROADWAY TIP PROJECT R-3415 = 5.288 MI
LENGTH STRUCTURE TIP PROJECT R-3415 = 0.015 MI
TOTAL LENGTH OF TIP PROJECT R-3415 = 5.303 MI

Prepared In the Office of:
DIVISION OF HIGHWAYS
801 Statesville Road, North Wilkesboro, NC 28659

2006 STANDARD SPECIFICATIONS

RIGHT OF WAY DATE:
AUGUST 21, 2003

LETTING DATE:
FEBRUARY 20, 2007

DIVISION ENGINEER
M. A. PETTYJOHN, P.E.

M.A. Pettyjohn P.E.
SIGNATURE
4/20/2006
DATE

HYDRAULICS ENGINEER
PAUL F. FISHER, P.E.

NORTH CAROLINA PROFESSIONAL SEAL 12575 ENGINEER PAUL F. FISHER

SIGNATURE P.E.
5/2/06
DATE

DIVISION DESIGN ENGINEER
JOSEPH L. LAWS, P.E.

NORTH CAROLINA PROFESSIONAL SEAL 028951 ENGINEER JOSEPH L. LAWS

Joseph L. Laws
SIGNATURE P.E.
4/20/2006
DATE

DIVISION OPERATIONS ENGINEER
W.O. ATKINS, P.E.

SIGNATURE P.E.
DATE

19-APR-2006 15:06
C:\pw_work\34541.tsh
rdsmay AT DIVIS01-231782

PROJECT REFERENCE NO.	SHEET NO.
R-3415	1-A

ROADWAY DESIGN ENGINEER

NORTH CAROLINA PROFESSIONAL SEAL 028951 ENGINEER JOSEPH L. LAWS

5/3/2006

EFF. 07-18-06

INDEX OF SHEETS

SHEET NUMBER	SHEET
1	TITLE SHEET
1-A	INDEX OF SHEETS, GENERAL NOTES, AND LIST OF STANDARD DRAWINGS
1-B	CONVENTIONAL SYMBOLS
1-C THRU 1-E	SURVEY CONTROL SHEETS
2 THRU 2-B	PAVEMENT SCHEDULE, TYPICAL SECTIONS, AND WEDGING DETAILS
2-C	DETAIL FOR CROSS VANE ROCK WEIR AND PREFORMED SCOUR HOLE
2-D	DETAIL FOR CONCRETE STEPS
2-E	DETAIL FOR COLLAR CONNECTING EXISTING RCBC TO 60" RCP
2-F	DETAIL OF JUNCTION BOX CONNECTING EXISTING RCBC TO 60" RCP W/ MANHOLE
2-G	DETAIL OF JUNCTION BOX CONNECTING EXISTING RCBC TO 60" RCP W/ MANHOLE
2-H	DETAIL FOR COLLAR CONNECTING EXISTING RCBC TO 54" RCP
2-I	DETAIL OF JUNCTION BOX CONNECTING EXISTING RCBC TO 54" RCP W/ MANHOLE
2-J	DETAIL OF JUNCTION BOX CONNECTING EXISTING RCBC TO 48" RCP W/ MANHOLE
3	SUMMARY OF QUANTITIES (2 SHEETS)
3A THRU 3-L	DRAINAGE SUMMARY
3-M	GUARDRAIL SUMMARY
3-N	EARTHWORK, PAVEMENT REMOVAL & SUMMARY OF CONCRETE SIDEWALK
3-O THRU 3-P	RIGHT OF WAY AREA DATA SHEETS
3-Q THRU 3-R	PARCEL INDEX SHEETS
4 THRU 24	PLAN SHEET
25 THRU 38	PROFILE SHEET
TCP-1 THRU TCP-9	TRAFFIC CONTROL PLANS
PM-1 THRU PM-4	PAVEMENT MARKING PLANS
EC-1 THRU EC-50	EROSION CONTROL PLANS
RF-1 THRU RF-2	REFORESTATION PLANS
UC-1 THRU UC-7	UTILITIES PLANS
UO-1 THRU UO-22	UTILITIES BY OTHERS
X-1 THRU X-242	CROSS-SECTIONS
C-1 THRU C-24	CULVERT PLANS
1 THRU 8	RETAINING WALL PLANS

GENERAL NOTES:

2006 SPECIFICATIONS
EFFECTIVE: 07-18-06
REVISED:

GRADE LINE:
GRADING AND SURFACING:

THE GRADE LINES SHOWN DENOTE THE FINISHED ELEVATION OF THE PROPOSED SURFACING AT GRADE POINTS SHOWN ON THE TYPICAL SECTIONS. GRADE LINES MAY BE ADJUSTED AT THEIR BEGINNING AND ENDING AND AT STRUCTURES AS DIRECTED BY THE ENGINEER IN ORDER TO SECURE A PROPER TIE-IN.

CLEARING:

CLEARING ON THIS PROJECT SHALL BE PERFORMED TO THE LIMITS ESTABLISHED BY METHOD III.

SUPERELEVATION:

ALL CURVES ON THIS PROJECT SHALL BE SUPERELEVATED IN ACCORDANCE WITH STD. NO. 225.04 USING THE RATE OF SUPERELEVATION AND RUNOFF SHOWN ON THE PLANS. SUPERELEVATION IS TO BE REVOLVED ABOUT THE GRADE POINTS SHOWN ON THE TYPICAL SECTIONS.

SHOULDER CONSTRUCTION:

ASPHALT, EARTH, AND CONCRETE SHOULDER CONSTRUCTION ON THE HIGH SIDE OF SUPERELEVATED CURVES SHALL BE IN ACCORDANCE WITH STD. NO. 560.01.

SIDE ROADS:

THE CONTRACTOR WILL BE REQUIRED TO DO ALL NECESSARY WORK TO PROVIDE SUITABLE CONNECTIONS WITH ALL ROADS, STREETS, AND DRIVES ENTERING THIS PROJECT. THIS WORK WILL BE PAID FOR AT THE CONTRACT UNIT PRICE FOR THE PARTICULAR ITEMS INVOLVED.

BERM DITCHES:

BERM DITCHES SHALL BE CONSTRUCTED IN ACCORDANCE WITH STD. NO. 240.01 AT LOCATIONS SHOWN ON THE PLANS OR AS DIRECTED BY THE ENGINEER.

UNDERDRAINS:

UNDERDRAINS SHALL BE CONSTRUCTED IN ACCORDANCE WITH STD. NO. 815.03 AT LOCATIONS DIRECTED BY THE ENGINEER.

DRIVEWAYS:

DRIVEWAYS SHALL BE CONSTRUCTED IN ACCORDANCE WITH STD. 848.03 AT LOCATIONS SHOWN ON PLANS OR AS DIRECTED BY THE ENGINEER.

STREET TURNOUT:

STREET RETURNS SHALL BE CONSTRUCTED IN ACCORDANCE WITH STD. NO. 848.04 USING THE RADII NOTED ON PLANS.

GUARDRAIL:

THE GUARDRAIL LOCATIONS SHOWN ON THE PLANS MAY BE ADJUSTED DURING CONSTRUCTION AS DIRECTED BY THE ENGINEER. THE CONTRACTOR SHOULD CONSULT WITH THE ENGINEER PRIOR TO ORDERING GUARDRAIL MATERIAL.

TEMPORARY SHORING:

SHORING REQUIRED FOR THE MAINTENANCE OF TRAFFIC WILL BE PAID FOR AS "EXTRA WORK" IN ACCORDANCE WITH SECTION 104-7.

UTILITIES:

UTILITY OWNERS ON THIS PROJECT ARE YADKIN VALLEY TELEPHONE.

DUKE ENERGY, SPRINT TELECOM, TOWN OF BOONVILLE, TIME WARNER CABLE.

ENERGY UNITED

ANY RELOCATION OF EXISTING UTILITIES WILL BE ACCOMPLISHED BY OTHERS, EXCEPT AS SHOWN ON THE PLANS.

RIGHT-OF-WAY MARKERS:

ALL RIGHT-OF-WAY MARKERS ON THIS PROJECT SHALL BE PLACED BY CONTRACT.

WHEELCHAIR RAMPS:

WHEELCHAIR RAMPS ARE SHOWN ON THE PLANS AT APPROXIMATE LOCATIONS. THE CONSTRUCTION OF ALL WHEELCHAIR RAMPS SHALL BE IN ACCORDANCE WITH DETAILS IN PLANS.

2006 ROADWAY STANDARD DRAWINGS

The following Roadway Standards as appear in "Roadway Standard Drawings" Highway Design Branch - N. C. Department of Transportation - Raleigh, N. C., Dated July 18, 2006 are applicable to this project and by reference hereby are considered a part of these plans:

STD.NO.	TITLE
DIVISION 2 - EARTHWORK	
200.03	Method of Clearing - Method III
225.02	Guide for Grading Subgrade - Secondary and Local
225.04	Method of Obtaining Superelevation - Two Lane Pavement
225.06	Method of Grading Sight Distance at Intersections
240.01	Guide for Berm Ditch Construction
DIVISION 3 - PIPE CULVERTS	
300.01	Method of Pipe Installation - Method 'A'
310.10	Driveway Pipe Construction
DIVISION 5 - SUBGRADE, BASES AND SHOULDERS	
560.01	Method of Shoulder Construction - High Side of Superelevated Curve - Method I
DIVISION 6 - ASPHALT BASES AND PAVEMENTS	
654.01	Pavement Repairs
DIVISION 8 - INCIDENTALS	
806.01	Concrete Right-of-Way Marker
806.02	Granite Right-of-Way Marker
815.03	Pipe Underdrain and Blind Drain
838.01	Concrete Endwall for Single and Double Pipe Culverts - 15" thru 48" Pipe 90 Skew
838.11	Brick Endwall for Single and Double Pipe Culverts - 15" thru 48" Pipe 90 Skew
838.21	Reinforced Concrete Endwall - for Single 54" Pipe 90 Skew
838.27	Reinforced Concrete Endwall - for Single 60" Pipe 90 Skew
838.45	Notes for Reinforced Concrete Endwall - Std. Dwg 838.21 thru 838.40
838.51	Reinforced Brick Endwall - for Single 54" Pipe 90 Skew
838.57	Reinforced Brick Endwall - for Single 60" Pipe 90 Skew
838.75	Notes for Reinforced Brick Endwall - Std. Dwg 838.51 thru 838.70
838.80	Precast Endwalls - 12" thru 72" Pipe 90 Skew
840.00	Concrete Base Pad for Drainage Structures
840.01	Brick Catch Basin - 12" thru 54" Pipe
840.02	Concrete Catch Basin - 12" thru 54" Pipe
840.03	Frame, Grates and Hood - for Use on Standard Catch Basin
840.14	Concrete Drop Inlet - 12" thru 30" Pipe
840.15	Brick Drop Inlet - 12" thru 30" Pipe
840.16	Drop Inlet Frame and Grates - for use with Std. Dwg 840.14 and 840.15
840.18	Concrete Grated Drop Inlet Type 'B' - 12" thru 36" Pipe
840.24	Frames and Narrow Slot Sag Grates
840.25	Anchorage for Frames - Brick or Concrete
840.27	Brick Grated Drop Inlet Type 'B' - 12" thru 36" Pipe
840.29	Frames and Narrow Slot Flat Grates
840.31	Concrete Junction Box - 12" thru 66" Pipe
840.32	Brick Junction Box - 12" thru 66" Pipe
840.34	Traffic Bearing Junction Box - for Use with Pipes 42" and Under
840.45	Precast Drainage Structure
840.46	Traffic Bearing Precast Drainage Structure
840.51	Brick Manhole - 12" thru 36" Pipe
840.54	Manhole Frame and Cover
840.66	Drainage Structure Steps
840.71	Concrete and Brick Pipe Plug
840.72	Pipe Collar
846.01	Concrete Curb, Gutter and Curb & Gutter
848.01	Concrete Sidewalk
848.03	Driveway Turnout - Drop Curb Type
848.04	Street Turnout
848.05	Wheelchair Ramp - Curb Cut
850.10	Guide for Berm Drainage Outlet - 15" and 18" Pipe
852.01	Concrete Islands
862.01	Guardrail Placement
862.02	Guardrail Installation
866.02	Woven Wire Fence - with Wood Post
866.04	Barbed Wire Fence with Wood Posts (2 - 7 Strands)
876.01	Rip Rap in Channels
876.02	Guide for Rip Rap at Pipe Outlets
876.04	Drainage Ditches with Class 'B' Rip Rap

5/28/99

03-MAY-2006 09:10
R:\Roadway\Proj\3415_tsh.dgn
rashaw AT DIVCAD-224782

PROJECT REFERENCE NO.	SHEET NO.
R-3415	1-B

*S.U.E = SUBSURFACE UTILITY ENGINEER

STATE OF NORTH CAROLINA
DIVISION OF HIGHWAYS

CONVENTIONAL SYMBOLS

ROADS & RELATED ITEMS

Edge of Pavement
Curb
Prop. Slope Stakes Cut — C
Prop. Slope Stakes Fill — F
Prop. Woven Wire Fence
Prop. Chain Link Fence
Prop. Barbed Wire Fence
Prop. Wheelchair Ramp — WCR
Curb Cut for Future Wheelchair Ramp — CCFR
Exist. Guardrail
Prop. Guardrail
Equality Symbol
Pavement Removal

RIGHT OF WAY

Baseline Control Point
Existing Right of Way Marker
Exist. Right of Way Line w/Marker
Prop. Right of Way Line with Proposed R/W Marker (Iron Pin & Cap)
Prop. Right of Way Line with Proposed (Concrete or Granite) R/W Marker
Exist. Control of Access Line — CA
Prop. Control of Access Line — CA
Exist. Easement Line — E
Prop. Temp. Construction Easement Line — E
Prop. Temp. Drainage Easement Line — TDE
Prop. Perm. Drainage Easement Line — PDE

HYDROLOGY

Stream or Body of Water
River Basin Buffer — RBB
Flow Arrow
Disappearing Stream
Spring
Swamp Marsh
Shoreline
Falls, Rapids
Prop Lateral, Tail, Head Ditches — FLOW

STRUCTURES

MAJOR
Bridge, Tunnel, or Box Culvert — CONC
Bridge Wing Wall, Head Wall and End Wall — CONC WW

MINOR
Head & End Wall — CONC HW
Pipe Culvert
Footbridge
Drainage Boxes — CB
Paved Ditch Gutter

UTILITIES

Exist. Pole
Exist. Power Pole
Prop. Power Pole
Exist. Telephone Pole
Prop. Telephone Pole
Exist. Joint Use Pole
Prop. Joint Use Pole
Telephone Pedestal — T
U/G Telephone Cable Hand Hold — HH
Cable TV Pedestal — C
U/G TV Cable Hand Hold — HH
U/G Power Cable Hand Hold — HH
Hydrant
Satellite Dish
Exist. Water Valve
Sewer Clean Out
Power Manhole — P
Telephone Booth
Cellular Telephone Tower
Water Manhole — W
Light Pole
H-Frame Pole
Power Line Tower
Pole with Base
Gas Valve
Gas Meter
Telephone Manhole — T
Power Transformer
Sanitary Sewer Manhole — S
Storm Sewer Manhole
Tank; Water, Gas, Oil
Water Tank With Legs
Traffic Signal Junction Box — S
Fiber Optic Splice Box — F
Television or Radio Tower
Utility Power Line Connects to Traffic Signal Lines Cut Into the Pavement — TS TS

Recorded Water Line — W W
Designated Water Line (S.U.E.*) — W W
Sanitary Sewer — SS SS
Recorded Sanitary Sewer Force Main — FSS FSS
Designated Sanitary Sewer Force Main(S.U.E.*) — FSS FSS
Recorded Gas Line — G G
Designated Gas Line (S.U.E.*) — G G
Storm Sewer — S S
Recorded Power Line — P P
Designated Power Line (S.U.E.*) — P P
Recorded Telephone Cable — T T
Designated Telephone Cable (S.U.E.*) — T T
Recorded U/G Telephone Conduit — TC TC
Designated U/G Telephone Conduit (S.U.E.*) — TC TC
Unknown Utility (S.U.E.*) — ?UTL ?UTL
Recorded Television Cable — TV TV
Designated Television Cable (S.U.E.*) — TV TV
Recorded Fiber Optics Cable — FO FO
Designated Fiber Optics Cable (S.U.E.*) — FO FO
Exist. Water Meter — O
U/G Test Hole (S.U.E.*)
Abandoned According to U/G Record — ATTUR
End of Information — E.O.I.

BOUNDARIES & PROPERTIES

State Line
County Line
Township Line
City Line
Reservation Line
Property Line
Property Line Symbol — PL
Exist. Iron Pin — EIP
Property Corner
Property Monument — ECM
Property Number — 123
Parcel Number — 6
Fence Line — WW & ISBW
Existing Wetland Boundaries — WLB
High Quality Wetland Boundary — HQ WLB
Medium Quality Wetland Boundaries — MQ WLB
Low Quality Wetland Boundaries — LQ WLB
Proposed Wetland Boundaries — WLB
Existing Endangered Animal Boundaries — EAB
Existing Endangered Plant Boundaries — EPB

BUILDINGS & OTHER CULTURE

Buildings
Foundations
Area Outline
Gate
Gas Pump Vent or U/G Tank Cap
Church
School
Park
Cemetery
Dam
Sign — S
Well — W
Small Mine
Swimming Pool

TOPOGRAPHY

Loose Surface
Hard Surface
Change in Road Surface
Curb
Right of Way Symbol — R/W
Guard Post — GP
Paved Walk
Bridge
Box Culvert or Tunnel
Ferry
Culvert
Footbridge
Trail, Footpath
Light House

VEGETATION

Single Tree
Single Shrub
Hedge
Woods Line
Orchard
Vineyard — VINEYARD

RAILROADS

Standard Gauge
RR Signal Milepost — CSX TRANSPORTATION, MILEPOST 35
Switch — SWITCH

revised 02/02/00

5/28/99

14-DEC-2004 09:36
C:\rdy\r-3415\r-3415.tsh
rashaw A1

PROJECT REFERENCE NO.	SHEET NO.
R-3415	1 C
LOCATION AND SURVEYS	

SURVEY CONTROL SHEET

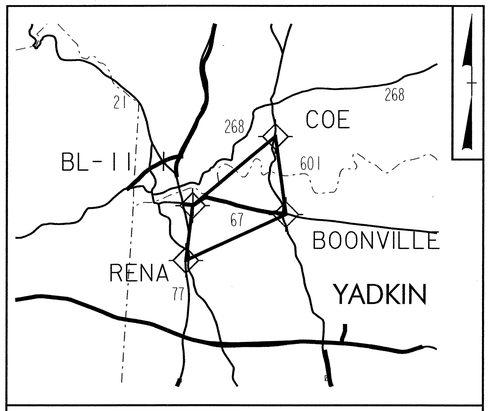

VICINITY MAP

1. THE SITE CALIBRATION SHOWN IS BASED UPON A NETWORK TIED TO THE NAD 83 ADJUSTMENT. THIS CALIBRATION WILL ALLOW THE END USER TO WORK WITHIN THE SAME COORDINATE SYSTEM WHEN USING RTK (REAL TIME KINEMATIC) GPS AND A LOCAL BASE STATION. IF ANOTHER SYSTEM SUCH AS VRS (VIRTUAL REFERENCE STATION) IS USED, ADDITIONAL FIELD TIES MAY BE NEEDED TO REDUCE PASSIBLE ERRORS, OR BIASES.

2. THE CONTROL DATA FOR THIS PROJECT CAN BE FOUND ELECTRONICALLY BY SELECTING PROJECT CONTROL DATA AT HTTP://WWW.DOH.DOT.STATE.NC.US/PRECONSTRUCT/HIGHWAY/LOCATION/PROJECT/

   THE FILES TO BE FOUND ARE AS FOLLOWS:

   R3415_LS_GPSCALIB_030729.TXT
   R3415_LS_WGS84_030728.TXT
   R3415_LS_LOCAL_030728.TXT
   R3415_LS_CONTROL_030XXX.TXT

   THE WGS84 AND LOCAL FILES ARE COMMA DELIMITED AND CAN BE USED TO REPRODUCE THE SITE CALIBRATION FOR THE END USER'S GPS EQUIPMENT. IF FURTHER INFORMATION IS NEEDED, PLEASE CONTACT THE LOCATION AND SURVEYS UNIT.

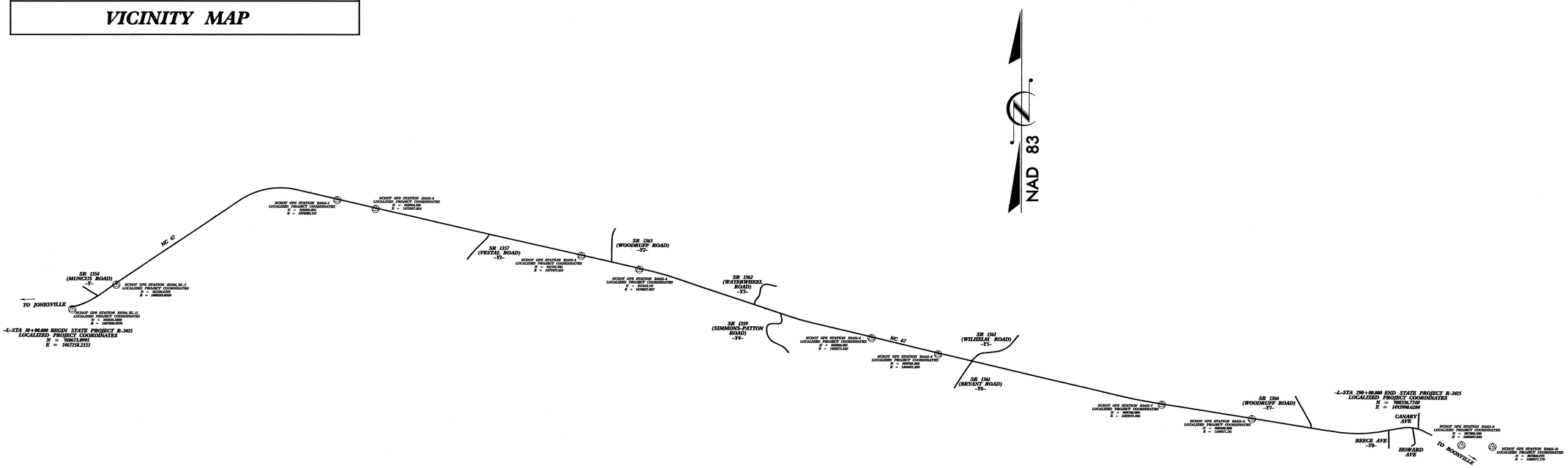

DATUM DESCRIPTION

THE LOCALIZED COORDINATE SYSTEM DEVELOPED FOR THIS PROJECT IS BASED ON THE STATE PLANE COORDINATES ESTABLISHED BY NCDOT FOR MONUMENT "R-2704,BL-7"
WITH NAD 83 STATE PLANE GRID COORDINATES OF NORTHING: 911120.0750(ft) EASTING: 1468183.655(ft)
THE AVERAGE COMBINED GRID FACTOR USED ON THIS PROJECT (GROUND TO GRID) IS: 0.99998135
THE N.C. LAMBERT GRID BEARING AND LOCALIZED HORIZONTAL GROUND DISTANCE FROM "R-2704,BL-7" TO -L- STATION 10+00.00 IS S 64°13'11" W 102.77 ft
ALL LINEAR DIMENSIONS ARE LOCALIZED HORIZONTAL DISTANCES
VERTICAL DATUM USED IS NGVD 29

△ *INDICATES GEODETIC CONTROL MONUMENTS USED OR SET FOR HORIZONTAL PROJECT CONTROL BY THE NCDOT LOCATION AND SURVEYS UNIT.*

PROJECT CONTROL ESTABLISHED UTILIZING GLOBAL POSITIONING SYSTEM.

NETWORK ESTABLISHED FROM EXISTING NCGS AND NCDOT MONUMENTATION.

SEE GPS CALIBRATION SHEET FOR HORIZONTAL AND VERTICAL COORDINATE VALUES.

NOTE: DRAWING NOT TO SCALE

SURVEY CONTROL SHEET R-3415

GPS CALIBRATION REPORT

PROJECT : R3415

TIP NUMBER	R-3415		
USER NAME	RGMILLER	DATE & TIME	10:43:50 AM 7/29/2003
COORDINATE SYSTEM	US STATE PLANE 1983(AT GROUND)	ZONE	NORTH CAROLINA 3200
HORIZONTAL DATUM	NAD 1983 (CONUS)		
VERTICAL DATUM	NGVD29	GEOID MODEL	GEOID99 (CONUS)
COORDINATE UNITS	US SURVEY FEET		
DISTANCE UNITS	US SURVEY FEET		
HEIGHT UNITS	US SURVEY FEET		

LOCAL SITE INFORMATION

LOCALIZED AROUND	BL-7
LATITUDE	36°14'24.20999"N
LONGITUDE	80°48'12.09741"W
SITE SCALE FACTOR	1.0000186500

THE NORTH CAROLINA DEPARTMENT OF TRANSPORTATION USES A LOCALIZED COORDINATE SYSTEM
WHICH IS VERY SIMILAR TO NORTH CAROLINA ZONE 3200 FROM WHICH IT IS DERIVED.
PLEASE TAKE CARE IN UTILIZING THESE COORDINATES TO ELIMINATE CONFUSION OF THE TWO SYSTEMS.
THIS FILE IS TO AID IN THE USE OF REAL TIME KINEMATIC (RTK) GPS DURING CONSTRUCTION LAYOUT.

DATUM TRANSFORMATION PARAMETERS

DATUM TRANSFORMATION COMPUTATION NOT REQUESTED

UPDATED DEFAULT PROJECTION (TRANSVERSE MERCATOR) DEFINITION

UPDATED DEFAULT PROJECTION NOT REQUESTED

HORIZONTAL ADJUSTMENT PARAMETERS

NORTHING COORDINATE OF ROTATION CENTER	911699.897SFT
EASTING COORDINATE OF ROTATION CENTER	1483396.496SFT
ROTATION ABOUT THE CENTER POINT	0°00'02"
TRANSLATION NORTH	0.158SFT
TRANSLATION EAST	-0.012SFT
SCALE FACTOR	1.00000408

VERTICAL ADJUSTMENT PARAMETERS

NORTHING COORDINATE OF ORIGIN POINT	910632.450SFT
EASTING COORDINATE OF ORIGIN POINT	1467302.900SFT
VERTICAL SEPARATION AT ORIGIN	0.067SFT
SLOPE NORTH	3.705PPM
SLOPE EAST	-1.879PPM

GEOID MODEL DEFINITION

GEOID99 (CONUS)

RESIDUAL DIFFERENCES BETWEEN GPS (WGS84) AND LOCAL COORDINATES

SUMMARY

	MAXIMUM ERROR	ROOT MEAN SQUARE ERROR	POINT
HORIZONTAL	0.074SFT	0.007	BL-11 - WGS84
VERTICAL	0.007SFT	0.001	R3415-8 - WGS84
THREE-DIMENSIONAL	0.074SFT	0.007	BL-11 - WGS84

POINT RESIDUALS

WGS84 COORDINATES	CALCULATED POINT FOR DISPLAY ONLY	LOCAL COORDINATES
POINT BL-11 - WGS84	NORTHING 910632.450SFT	POINT BL-11 - LOCAL
LATITUDE 36°14'19.22760"N	EASTING 1467302.900SFT	NORTHING 910632.389SFT
LONGITUDE 80°48'22.73713"W	ELEVATION 1050.333SFT	EASTING 1467302.857SFT
HEIGHT 940.648SFT	HORZ ERROR 0.074SFT	ELEVATION 1050.333SFT
	VERT ERROR 0.000SFT	UTILIZED HORZ AND VERT
	3D ERROR 0.074SFT	QUALITY SURVEY QUALITY
POINT BL-7 - WGS84	NORTHING 911120.047SFT	POINT BL-7 - LOCAL
LATITUDE 36°14'24.20669"N	EASTING 1468183.627SFT	NORTHING 911120.075SFT
LONGITUDE 80°48'12.09670"W	ELEVATION 1004.142SFT	EASTING 1468183.655SFT
HEIGHT 894.450SFT	HORZ ERROR 0.040SFT	ELEVATION 1004.139SFT
	VERT ERROR 0.003SFT	UTILIZED HORZ AND VERT
	3D ERROR 0.040SFT	QUALITY SURVEY QUALITY
POINT R3415-1 - WGS84	NORTHING 912829.651SFT	POINT R3415-1 - LOCAL
LATITUDE 36°14'41.89793"N	EASTING 1472592.135SFT	NORTHING 912829.663SFT
LONGITUDE 80°47'18.66935"W	ELEVATION 896.757SFT	EASTING 1472592.147SFT
HEIGHT 787.033SFT	HORZ ERROR 0.017SFT	ELEVATION 896.757SFT
	VERT ERROR 0.000SFT	UTILIZED HORZ AND VERT
	3D ERROR 0.017SFT	QUALITY SURVEY QUALITY
POINT R3415-2 - WGS84	NORTHING 912654.188SFT	POINT R3415-2 - LOCAL
LATITUDE 36°14'40.29957"N	EASTING 1473357.848SFT	NORTHING 912654.195SFT
LONGITUDE 80°47'09.28510"W	ELEVATION 894.117SFT	EASTING 1473357.856SFT
HEIGHT 784.388SFT	HORZ ERROR 0.011SFT	ELEVATION 894.116SFT
	VERT ERROR 0.001SFT	UTILIZED HORZ AND VERT
	3D ERROR 0.011SFT	QUALITY SURVEY QUALITY
POINT R3415-3 - WGS84	NORTHING 911715.761SFT	POINT R3415-3 - LOCAL
LATITUDE 36°14'31.75097"N	EASTING 1477471.506SFT	NORTHING 911715.767SFT
LONGITUDE 80°46'18.87255"W	ELEVATION 891.477SFT	EASTING 1477471.513SFT
HEIGHT 781.727SFT	HORZ ERROR 0.009SFT	ELEVATION 891.482SFT
	VERT ERROR 0.005SFT	UTILIZED HORZ AND VERT
	3D ERROR 0.011SFT	QUALITY SURVEY QUALITY
POINT R3415-4 - WGS84	NORTHING 911443.138SFT	POINT R3415-4 - LOCAL
LATITUDE 36°14'29.25957"N	EASTING 1478627.601SFT	NORTHING 911443.141SFT
LONGITUDE 80°46'04.70331"W	ELEVATION 902.923SFT	EASTING 1478627.609SFT
HEIGHT 793.168SFT	HORZ ERROR 0.009SFT	ELEVATION 902.922SFT
	VERT ERROR 0.001SFT	UTILIZED HORZ AND VERT
	3D ERROR 0.009SFT	QUALITY SURVEY QUALITY
POINT R3415-5 - WGS84	NORTHING 910095.601SFT	POINT R3415-5 - LOCAL
LATITUDE 36°14'16.75146"N	EASTING 1483271.532SFT	NORTHING 910095.602SFT
LONGITUDE 80°45'07.73474"W	ELEVATION 1054.427SFT	EASTING 1483271.535SFT
HEIGHT 944.657SFT	HORZ ERROR 0.003SFT	ELEVATION 1054.428SFT
	VERT ERROR 0.001SFT	UTILIZED HORZ AND VERT
	3D ERROR 0.003SFT	QUALITY SURVEY QUALITY
POINT R3415-6 - WGS84	NORTHING 909782.307SFT	POINT R3415-6 - LOCAL
LATITUDE 36°14'13.88592"N	EASTING 1484601.310SFT	NORTHING 909782.306SFT
LONGITUDE 80°44'51.43844"W	ELEVATION 1079.260SFT	EASTING 1484601.311SFT
HEIGHT 969.486SFT	HORZ ERROR 0.001SFT	ELEVATION 1079.263SFT
	VERT ERROR 0.003SFT	UTILIZED HORZ AND VERT
	3D ERROR 0.003SFT	QUALITY SURVEY QUALITY
POINT R3415-7 - WGS84	NORTHING 908782.691SFT	POINT R3415-7 - LOCAL
LATITUDE 36°14'04.77832"N	EASTING 1489072.466SFT	NORTHING 908782.690SFT
LONGITUDE 80°43'56.65870"W	ELEVATION 1022.625SFT	EASTING 1489072.464SFT
HEIGHT 912.839SFT	HORZ ERROR 0.002SFT	ELEVATION 1022.626SFT
	VERT ERROR 0.001SFT	UTILIZED HORZ AND VERT
	3D ERROR 0.003SFT	QUALITY SURVEY QUALITY
POINT R3415-8 - WGS84	NORTHING 908499.899SFT	POINT R3415-8 - LOCAL
LATITUDE 36°14'02.29243"N	EASTING 1490871.198SFT	NORTHING 908499.896SFT
LONGITUDE 80°43'34.64730"W	ELEVATION 1050.169SFT	EASTING 1490871.192SFT
HEIGHT 940.379SFT	HORZ ERROR 0.007SFT	ELEVATION 1050.162SFT
	VERT ERROR 0.007SFT	UTILIZED HORZ AND VERT
	3D ERROR 0.009SFT	QUALITY SURVEY QUALITY
POINT R3415-9 - WGS84	NORTHING 907986.290SFT	POINT R3415-9 - LOCAL
LATITUDE 36°13'57.93171"N	EASTING 1495057.254SFT	NORTHING 907986.289SFT
LONGITUDE 80°42'43.45369"W	ELEVATION 1043.976SFT	EASTING 1495057.243SFT
HEIGHT 934.178SFT	HORZ ERROR 0.011SFT	ELEVATION 1043.978SFT
	VERT ERROR 0.002SFT	UTILIZED HORZ AND VERT
	3D ERROR 0.012SFT	QUALITY SURVEY QUALITY
POINT R3415-10 - WGS84	NORTHING 907956.076SFT	POINT R3415-10 - LOCAL
LATITUDE 36°13'57.73881"N	EASTING 1495677.778SFT	NORTHING 907956.075SFT
LONGITUDE 80°42'35.87475"W	ELEVATION 1057.596SFT	EASTING 1495677.771SFT
HEIGHT 947.797SFT	HORZ ERROR 0.007SFT	ELEVATION 1057.594SFT
	VERT ERROR 0.002SFT	UTILIZED HORZ AND VERT
	3D ERROR 0.008SFT	QUALITY SURVEY QUALITY
POINT BOONVILLE - WGS8	NORTHING 907830.378SFT	POINT BOONVILLE - LOCA
LATITUDE 36°13'56.79660"N	EASTING 1497444.467SFT	NORTHING 907830.377SFT
LONGITUDE 80°42'14.28854"W	ELEVATION 1065.939SFT	EASTING 1497444.461SFT
HEIGHT 956.137SFT	HORZ ERROR 0.006SFT	ELEVATION 1065.940SFT
	VERT ERROR 0.001SFT	UTILIZED HORZ AND VERT
	3D ERROR 0.006SFT	QUALITY SURVEY QUALITY
POINT COE - WGS84	NORTHING 932472.303SFT	POINT COE - LOCAL
LATITUDE 36°17'59.83885"N	EASTING 1494019.152SFT	NORTHING 932472.313SFT
LONGITUDE 80°43'01.29414"W	ELEVATION 1056.967SFT	EASTING 1494019.161SFT
HEIGHT 947.183SFT	HORZ ERROR 0.014SFT	ELEVATION 1056.967SFT
	VERT ERROR 0.000SFT	UTILIZED HORZ AND VERT
	3D ERROR 0.014SFT	QUALITY SURVEY QUALITY

DATUM DESCRIPTION

THE LOCALIZED COORDINATE SYSTEM DEVELOPED FOR THIS PROJECT IS BASED ON THE STATE PLANE COORDINATES ESTABLISHED BY NCDOT FOR MONUMENT "R2704,BL-7"
WITH NAD 83 STATE PLANE GRID COORDINATES OF NORTHING: 911120.075(ft) EASTING: 1468183.655(ft)
THE AVERAGE COMBINED GRID FACTOR USED ON THIS PROJECT (GROUND TO GRID) IS: .99998135
THE N.C. LAMBERT GRID BEARING AND LOCALIZED HORIZONTAL GROUND DISTANCE FROM "R2704,BL-7" TO -L- STATION 10+00.00 IS
S 64°13'11" W 102.77'
ALL LINEAR DIMENSIONS ARE LOCALIZED HORIZONTAL DISTANCES
VERTICAL DATUM USED IS NGVD 29

NOTES

1. THE SITE CALIBRATION SHOWN IS BASED UPON A NETWORK TIED TO THE NAD 83 ADJUSTMENT. THIS CALIBRATION WILL ALLOW THE END USER TO WORK WITHIN THE SAME COORDINATE SYSTEM WHEN USING RTK (REAL TIME KINEMATIC) GPS AND A LOCAL BASE STATION. IF ANOTHER SYSTEM SUCH AS VRS (VIRTUAL REFERENCE STATION) IS USED, ADDITIONAL FIELD TIES MAYBE NEEDED TO REDUCE POSSIBLE ERRORS, OR BIASES.

2. THE CONTROL DATA FOR THIS PROJECT CAN BE FOUND ELECTRONICALLY BY SELECTING PROJECT CONTROL DATA AT HTTP://WWW.DOH.DOT.STATE.NC.US/PRECONSTRUCT/HIGHWAY/LOCATION/PROJECT/

   THE FILES TO BE FOUND ARE AS FOLLOWS:

   R3415_LS_GPSCALIB_030729.HTML
   R3415_LS_WGS84_030728.TXT
   R3415_LS_LOCAL_030728.TXT
   R3415_LS_CONTROL_030XXX.TXT

   THE WGS84 AND LOCAL FILES ARE COMMA DELIMITED AND CAN BE USED TO REPRODUCE THE SITE CALIBRATION FOR THE END USER'S GPS EQUIPMENT. IF FURTHER INFORMATION IS NEEDED, PLEASE CONTACT THE LOCATION AND SURVEYS UNIT.

5/28/99
14-DEC-2004 13:24
C:\rdy\r-3415\Control\R3415_ls_id_030826.dgn
rashaw

SURVEY CONTROL SHEET R-3415

BASELINE DATA

BL

POINT	DESC.	NORTH	EAST	ELEVATION	L STATION	OFFSET
1	BL-1	911702.9390	1468967.9050	996.17	30+10.41	16.02 LT
2	BL-2	912238.8880	1469751.1540	976.88	39+59.43	18.83 LT
3	BL-3	913020.7440	1470961.4590	970.41	53+94.95	35.82 LT
4	BL-4	913057.0130	1471787.6820	942.09	62+16.05	24.12 LT
101	GPS-1	912829.6640	1472592.1470	896.76	70+50.97	17.36 RT
102	GPS-2	912654.1950	1473357.8540	894.12	78+36.53	16.95 RT
5	BL-5	912413.2310	1474413.7180	911.96	89+19.52	16.00 RT
6	BL-6	912206.6580	1475455.8670	959.49	99+81.50	14.99 LT
7	BL-7	912091.5320	1475958.8480	958.74	104+97.48	14.91 LT
8	BL-8	911922.8350	1476697.4970	912.57	112+55.15	15.16 LT
103	GPS-3	911715.7650	1477471.5140	891.48	120+55.85	14.12 RT
104	GPS-4	911443.1410	1478627.6070	902.92	132+43.63	22.11 RT
9	BL-9	911227.9560	1479432.9440	899.53	140+79.40	15.83 RT
10	BL-10	910933.1800	1480320.7020	909.63	150+14.74	17.60 RT
11	BL-11	910668.9860	1481132.8820	960.88	158+68.81	15.84 RT
12	BL-12	910457.1010	1481788.7180	1008.70	165+57.54	15.73 RT
13	BL-13	910264.4270	1482751.2090	1023.94	175+37.90	23.42 LT
105	GPS-5	910095.6010	1483271.5350	1054.43	180+82.99	22.63 RT
106	GPS-6	909782.3040	1484601.3090	1079.26	194+49.17	25.26 RT
14	BL-14	909638.8700	1485391.6240	1061.95	202+51.37	15.35 LT
15	BL-15	909339.1490	1486523.3790	978.18	214+21.69	16.84 RT
16	BL-16	909070.7110	1487817.8860	980.98	227+43.30	17.73 LT
107	GPS-7	908782.6900	1489072.4650	1022.62	240+30.38	16.13 RT
17	BL-17	908675.0280	1489958.0940	1000.60	249+21.95	16.14 LT
108	GPS-8	908499.8960	1490871.1910	1050.16	258+51.20	13.93 RT
18	BL-18	908353.9100	1491986.0030	1038.38	269+75.08	18.58 LT
19	BL-19	908196.6360	1492975.6100	1043.78	279+76.07	18.71 RT
20	BL-20	908354.2960	1494048.8560	1046.54	290+56.66	19.94 LT
21	BL-21	908021.8500	1494828.2180	1043.63	OUTSIDE PROJECT LIMITS	
110	GPS-10	907956.0750	1495677.7700	1057.59	OUTSIDE PROJECT LIMITS	

BY1

POINT	DESC.	NORTH	EAST	ELEVATION	L STATION	OFFSET
206	BL-6	909093.8170	1486992.0610	959.49	219+34.15	148.15 RT
111	BY1-1	912012.1560	1475504.1120	960.46	100+71.89	163.86 RT

BY2

POINT	DESC.	NORTH	EAST	ELEVATION	L STATION	OFFSET
121	BY2-1	911843.0770	1478065.2660	900.28	126+06.27	242.38 LT
203	GPS-3	911504.7810	1477747.3310	891.48	123+71.77	158.29 RT

BY3

POINT	DESC.	NORTH	EAST	ELEVATION	L STATION	OFFSET
212	BL-11	910668.9860	1481132.8820	960.88	158+68.81	15.84 RT
131	BY3-1	910531.0260	1481484.4640	990.58	162+45.86	37.50 RT
132	BY3-2	910391.1390	1481278.6640	1006.46	160+93.84	234.50 RT
133	BY3-3	910283.8390	1481161.2420	1006.84	160+15.65	373.02 RT
134	BY3-4	910046.8470	1481243.6580	1013.40	161+67.75	572.58 RT

BY4

POINT	DESC.	NORTH	EAST	ELEVATION	L STATION	OFFSET
141	BY4-1	909819.5180	1485743.9670	1047.15	205+52.89	271.99 LT
214	BL-14	909638.8700	1485391.6240	1061.95	202+51.37	15.35 LT

BY5

POINT	DESC.	NORTH	EAST	ELEVATION	L STATION	OFFSET
215	BL-14	909638.8700	1485391.6240	1061.95	202+51.37	15.35 LT
151	BY5-1	909323.2230	1485044.1270	1074.11	199+85.18	371.47 RT

BY6

POINT	DESC.	NORTH	EAST	ELEVATION	L STATION	OFFSET
161	BY6-1	908777.9940	1491854.2520	1041.53	267+77.55	416.31 LT
218	BL-18	908353.9100	1491986.0030	1038.38	269+75.08	18.58 LT

****
200 ELEVATION = 977.98
N 912316 E 1469492
BL STATION 12+78 210 LEFT
R/R SPIKE SET IN BASE OF 24"
OAK NORTH OF GRAVEYARD
ON NORTH SIDE OF NC 67
****
****
201 ELEVATION = 946.36
N 913117 E 1471674
BL STATION 36+06 65 LEFT
R/R SPIKE SET IN BASE OF 30"
OAK EAST OF BURNT HOUSE ON
NORTH SIDE OF NC 67
****
****
202 ELEVATION = 920.26
N 912259 E 1474725
BL STATION 67+57 91 RIGHT
R/R SPIKE SET IN BASE OF 36"
FORKED MAPLE APPROX. 180'
EAST OF PRIVATE DR. ON SOUTH
SIDE OF NC 67
****
****
203 ELEVATION = 884.36
N 911505 E 1477747
BL STATION 98+76 142 RIGHT
R/R SPIKE SET IN BASE OF 24"
BIRCH ALONG CREEK BANK 50'
WEST OF CULVERT UNDER PRIVATE
DRIVE. (TILLEYS WAY) ON SOUTH
SIDE OF NC 67
****
****
204 ELEVATION = 925.32
N 911016 E 1481083
BL STATION 132+15 314 LEFT
R/R SPIKE SET IN BASE OF 18"
FORKED MAPLE ON EAST SIDE
OF WATER WHEEL RD. AND
NORTH SIDE OF NC 67
****
****
205 ELEVATION = 1066.29
N 910186 E 1483469
BL STATION 157+59 133 LEFT
R/R SPIKE SET IN BASE OF 46"
FORKED WILLOW OAK IN FIELD
NORTH OF ENTRANCE TO FIELD
ON NORTH SIDE OF NC 67
****
****
206 ELEVATION = 966.75
N 909094 E 1486992
BL STATION 194+36 145 RIGHT
R/R SPIKE SET IN BASE OF 15"
OAK IN BAMBOO THICKET ON
NORTH SIDE OF NC 67
****
****
207 ELEVATION = 1040.21
N 908159 E 1490389
BL STATION 229+49 426 RIGHT
R/R SPIKE SET IN BASE OF 15"
OAK ON WEST SIDE OF RD.
LEADING TO BOONE TRACE
SUBDIVISION ON SOUTH SIDE
OF NC 67
****
****
208 ELEVATION = 1053.95
N 907991 E 1493631
BL STATION 261+04 299 RIGHT
R/R SPIKE SET IN BASE OF 28"
OAK ON EAST SIDE OF REESE AV.
IN TOWN OF BOONEVILLE ON
SOUTH SIDE OF NC 67
****
****
209 ELEVATION = 1050.05
N 907632 E 1495481
BL STATION 280+98 338 RIGHT
R/R SPIKE SET IN PARKING LOT OF
CAVES BARBER SHOP AT CEMETARY
ST. IN TOWN OF BOONEVILLE ON
SOUTH SIDE OF NC 667
****

DATUM DESCRIPTION

THE LOCALIZED COORDINATE SYSTEM DEVELOPED FOR THIS PROJECT IS BASED ON THE STATE PLANE COORDINATES ESTABLISHED BY NCDOT FOR MONUMENT "R2704,BL-7"
WITH NAD 83 STATE PLANE GRID COORDINATES OF NORTHING: 911120.074(ft) EASTING: 1468183.655(ft)
THE AVERAGE COMBINED GRID FACTOR USED ON THIS PROJECT (GROUND TO GRID) IS: .99998135
THE N.C. LAMBERT GRID BEARING AND LOCALIZED HORIZONTAL GROUND DISTANCE FROM "R2704,BL-7" TO -L- STATION 10+00.00 IS S 64°13'11" W 1027.71'
ALL LINEAR DIMENSIONS ARE LOCALIZED HORIZONTAL DISTANCES
VERTICAL DATUM USED IS NGVD 29

NOTES

1. THE SITE CALIBRATION SHOWN IS BASED UPON A NETWORK TIED TO THE NAD 83 ADJUSTMENT. THIS CALIBRATION WILL ALLOW THE END USER TO WORK WITHIN THE SAME COORDINATE SYSTEM WHEN USING RTK (REAL TIME KINEMATIC) GPS AND A LOCAL BASE STATION. IF ANOTHER SYSTEM SUCH AS VRS (VIRTUAL REFERENCE STATION) IS USED, ADDITIONAL FIELD TIES MAYBE NEEDED TO REDUCE POSSIBLE ERRORS, OR BIASES.

2. THE CONTROL DATA FOR THIS PROJECT CAN BE FOUND ELECTRONICALLY BY SELECTING PROJECT CONTROL DATA AT HTTP://WWW.DOH.DOT.STATE.NC.US/PRECONSTRUCT/HIGHWAY/LOCATION/PROJECT/

   THE FILES TO BE FOUND ARE AS FOLLOWS:

   R3415_LS_GPSCALIB_030729.HTML
   R3415_LS_WGS84_030728.TXT
   R3415_LS_LOCAL_030728.TXT
   R3415_LS_CONTROL_0307XX.TXT

   THE WGS84 AND LOCAL FILES ARE COMMA DELIMITED AND CAN BE USED TO REPRODUCE THE SITE CALIBRATION FOR THE END USER'S GPS EQUIPMENT. IF FURTHER INFORMATION IS NEEDED, PLEASE CONTACT THE LOCATION AND SURVEYS UNIT.

5/28/99
14-DEC-2004 13:29
C:\rdy\r-3415\Control\R3415_ls_le_030826.dgn
r_eshaw
A1

PROJECT REFERENCE NO.	SHEET NO.
R-3415	2
R/W SHEET NO.	
ROADWAY DESIGN ENGINEER	PAVEMENT DESIGN ENGINEER

NORTH CAROLINA PROFESSIONAL SEAL 028951 ENGINEER JOSEPH L. LAWS 1/27/05

NORTH CAROLINA PROFESSIONAL SEAL 22896 ENGINEER CLARK S. MORRISON 1/26/06

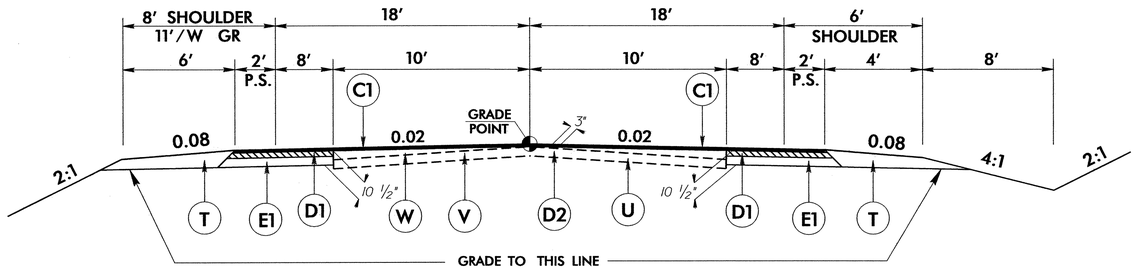

TYPICAL SECTION NO. 1

-L- STA. 14+50.00 TO -L- STA. 47+00.00
-L- STA. 253+00.00 TO -L- STA. 267+50.00

NOTE: MILL EXISTING PAVEMENT AND REPLACE W/ I19.0B

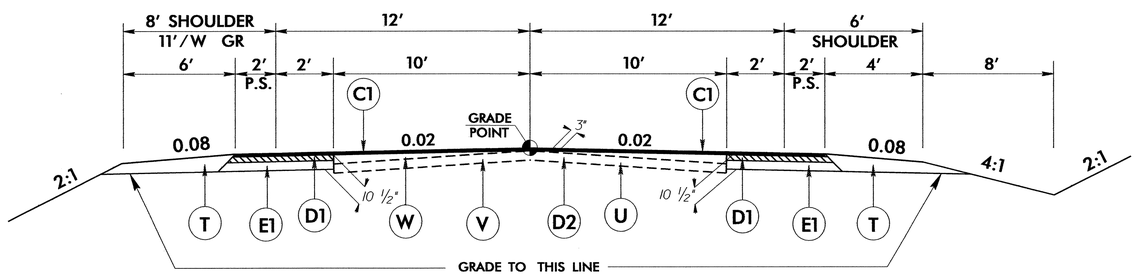

TYPICAL SECTION NO. 2

-L- STA. 50+00.00 TO -L- STA. 98+30.00
-L- STA. 106+50.00 TO -L- STA. 122+00.00
-L- STA. 130+00.00 TO -L- STA. 156+00.00
-L- STA. 167+00.00 TO -L- STA. 196+50.00
-L- STA. 206+25.00 TO -L- STA. 250+00.00

NOTE: MILL EXISTING PAVEMENT AND REPLACE W/ I19.0B

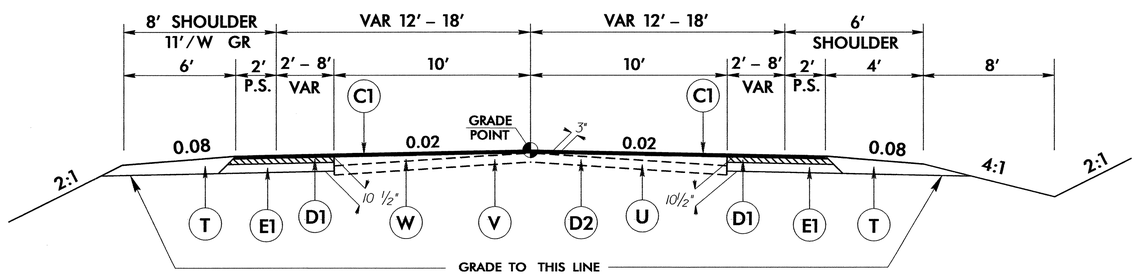

TYPICAL SECTION NO. 3

-L- STA. 47+00.00 TO -L- STA. 50+00.00
-L- STA. 98+30.00 TO -L- STA. 106+50.00
-L- STA. 122+00.00 TO -L- STA. 130+00.00
-L- STA. 156+00.00 TO -L- STA. 167+00.00
-L- STA. 196+50.00 TO -L- STA. 206+25.00
-L- STA. 250+00.00 TO -L- STA. 253+00.00

NOTE: MILL EXISTING PAVEMENT AND REPLACE W/ I19.0B

PAVEMENT SCHEDULE

C1	PROP. APPROX. 3" ASPHALT CONCRETE SURFACE COURSE, TYPE S9.5B, AT AN AVERAGE RATE OF 168 LBS. PER SQ. YD. IN EACH OF TWO LAYERS.
C2	PROP. APPROX. 2" ASPHALT CONCRETE SURFACE COURSE, TYPE S9.5B, AT AN AVERAGE RATE OF 224 LBS. PER SQ. YD.
C3	PROP. VAR. DEPTH ASPHALT CONCRETE SURFACE COURSE, TYPE S9.5B, AT AN AVERAGE RATE OF 112 LBS. PER SQ. YD. PER 1" DEPTH. TO BE PLACED IN LAYERS NOT TO EXCEED 1½" IN DEPTH.
D1	PROP. APPROX. 3½" ASPHALT CONCRETE INTERMEDIATE COURSE, TYPE I19.0B, AT AN AVERAGE RATE OF 399 LBS. PER SQ. YD.
D2	PROP. APPROX. 2½" ASPHALT CONCRETE INTERMEDIATE COURSE, TYPE I19.0B, AT AN AVERAGE RATE OF 285 LBS. PER SQ. YD.
D3	TYPE I19.0B, AT AN AVERAGE RATE OF 114 LBS. PER SQ. YD. PER 1" DEPTH, TO BE PLACED IN LAYERS NOT LESS THAN 2¼" IN DEPTH OR GREATER THAN 4" IN DEPTH.
E1	PROP. APPROX. 4" ASPHALT CONCRETE BASE COURSE, TYPE B25.0B, AT AN AVERAGE RATE OF 456 LBS. PER SQ. YD.
E2	PROP. VAR. DEPTH ASPHALT CONCRETE BASE COURSE, TYPE B25.0, AT AN AVERAGE RATE OF 114 LBS. PER SQ. YD. PER 1" DEPTH. TO BE PLACED IN LAYERS NOT LESS THAN 3" IN DEPTH OR GREATER THAN 5½" IN DEPTH.
J1	PROP. 8" AGGREGATE BASE COURSE.
R1	2' - 6" CONCRETE CURB AND GUTTER.
R2	8" X 18" CONCRETE CURB.
S	4" CONCRETE SIDEWALK.
T	EARTH MATERIAL.
V	2 ½" DEPTH MILLING BITUMINOUS PAVEMENT.
W	VARIABLE DEPTH ASPHALT PAVEMENT (SEE WEDGING DETAIL)
U	EXISTING PAVEMENT.

NOTE: PAVEMENT EDGE SLOPES ARE 1:1 UNLESS SHOWN OTHERWISE.

7/2/99

26-JAN-2005 08:57
C:\rdy\r-3415\r-3415.typ
rashaw A11

PROJECT REFERENCE NO.	SHEET NO.
R-3415	2-A
R/W SHEET NO.	
ROADWAY DESIGN ENGINEER	PAVEMENT DESIGN ENGINEER
NORTH CAROLINA PROFESSIONAL SEAL 028951 ENGINEER JOSEPH L. LAWS 1/27/05	NORTH CAROLINA PROFESSIONAL SEAL 22896 ENGINEER CLARK S. MORRISON 4/26/06

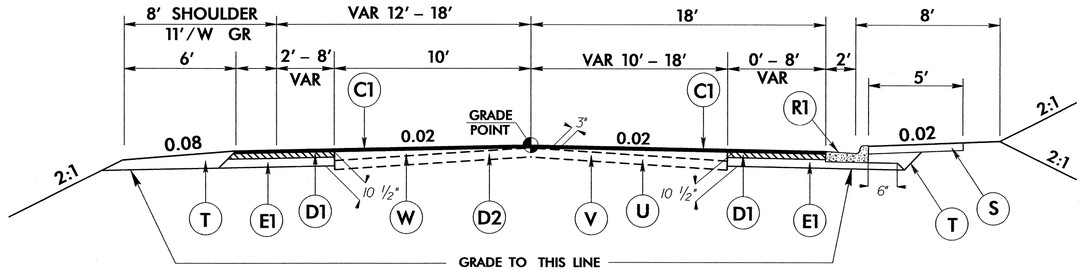

TYPICAL SECTION NO. 4

-L- STA. 267+50.00 TO -L- STA. 271+30.00

NOTE: MILL EXISTING PAVEMENT AND REPLACE W/ I19.0B

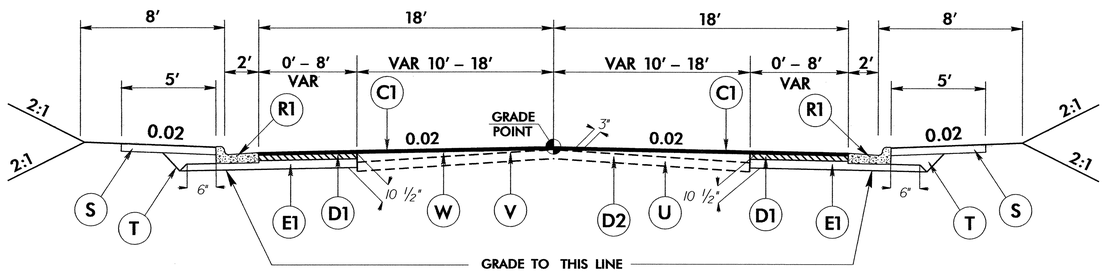

TYPICAL SECTION NO. 5

-L- STA. 271+30.00 TO -L- STA. 288+70.00

NOTE: MILL EXISTING PAVEMENT AND REPLACE W/ I19.0B

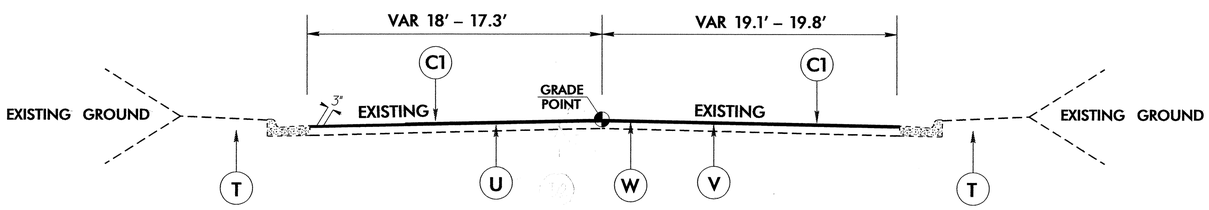

TYPICAL SECTION NO. 6

-L- STA. 288+70.00 TO -L- STA. 290+00.00

NOTE: MILL EXISTING PAVEMENT AND REPLACE W/ I19.0B

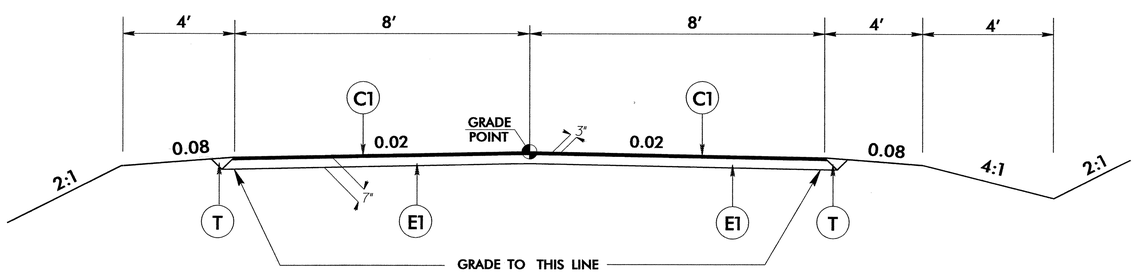

TYPICAL SECTION NO. 7

-Y- STA. 11+75.00 TO -Y- STA. 13+33.00

PAVEMENT SCHEDULE

C1	PROP. APPROX. 3" ASPHALT CONCRETE SURFACE COURSE, TYPE S9.5B, AT AN AVERAGE RATE OF 168 LBS. PER SQ. YD. IN EACH OF TWO LAYERS.
C2	PROP. APPROX. 2" ASPHALT CONCRETE SURFACE COURSE, TYPE S9.5B, AT AN AVERAGE RATE OF 224 LBS. PER SQ. YD.
C3	PROP. VAR. DEPTH ASPHALT CONCRETE SURFACE COURSE, TYPE S9.5B, AT AN AVERAGE RATE OF 112 LBS. PER SQ. YD. PER 1" DEPTH. TO BE PLACED IN LAYERS NOT TO EXCEED 1½" IN DEPTH.
D1	PROP. APPROX. 3½" ASPHALT CONCRETE INTERMEDIATE COURSE, TYPE I19.0B, AT AN AVERAGE RATE OF 399 LBS. PER SQ. YD.
D2	PROP. APPROX. 2½" ASPHALT CONCRETE INTERMEDIATE COURSE, TYPE I19.0B, AT AN AVERAGE RATE OF 285 LBS. PER SQ. YD.
D3	TYPE I19.0B, AT AN AVERAGE RATE OF 114 LBS. PER SQ. YD. PER 1" DEPTH, TO BE PLACED IN LAYERS NOT LESS THAN 2¼" IN DEPTH OR GREATER THAN 4" IN DEPTH.
E1	PROP. APPROX. 4" ASPHALT CONCRETE BASE COURSE, TYPE B25.0B, AT AN AVERAGE RATE OF 456 LBS. PER SQ. YD.
E2	PROP. VAR. DEPTH ASPHALT CONCRETE BASE COURSE, TYPE B25.0, AT AN AVERAGE RATE OF 114 LBS. PER SQ. YD. PER 1" DEPTH. TO BE PLACED IN LAYERS NOT LESS THAN 3" IN DEPTH OR GREATER THAN 5½" IN DEPTH.
J1	PROP. 8" AGGREGATE BASE COURSE.
R1	2' - 6" CONCRETE CURB AND GUTTER.
R2	8" X 18" CONCRETE CURB.
S	4" CONCRETE SIDEWALK.
T	EARTH MATERIAL.
V	2 ½" DEPTH MILLING BITUMINOUS PAVEMENT.
W	VARIABLE DEPTH ASPHALT PAVEMENT (SEE WEDGING DETAIL)
U	EXISTING PAVEMENT.

NOTE: PAVEMENT EDGE SLOPES ARE 1:1 UNLESS SHOWN OTHERWISE.

8/17/99

26-JAN-2005 09:02
C:\rdy\r-3415\r3415.typ
rashaw AT

PROJECT REFERENCE NO.	SHEET NO.
R-3415	2-B
R/W SHEET NO.	
ROADWAY DESIGN ENGINEER	PAVEMENT DESIGN ENGINEER

NORTH CAROLINA PROFESSIONAL SEAL 028951 ENGINEER JOSEPH L. LAWS 4/20/2006

NORTH CAROLINA PROFESSIONAL SEAL 22896 ENGINEER CLARK S. MORRISON 4/26/06

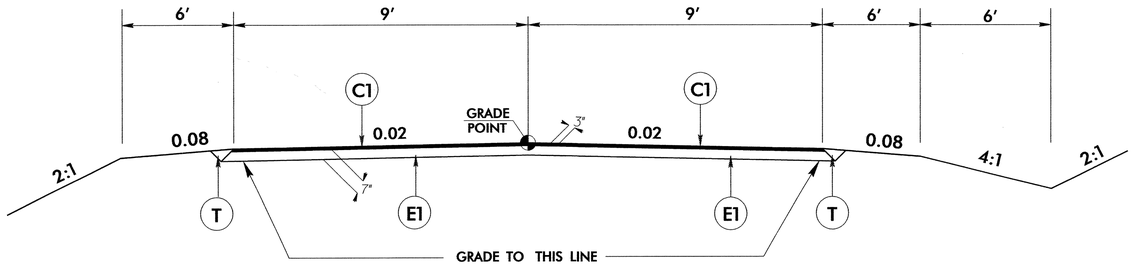

TYPICAL SECTION NO. 8

–Y3– STA. 11+00.00 TO –Y3– STA. 16+99.00

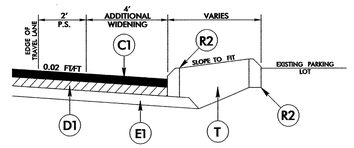

CHANNELIZATION DETAIL

USE CHANNELIZATION IN CONJUCTION WITH TYPICAL SECTIONS NO. 1, 2 & 3 AT LOCATIONS AS SHOWN ON PLANS

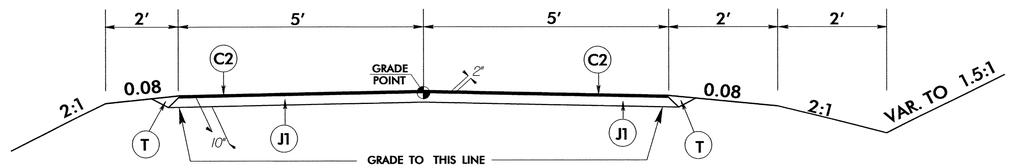

TYPICAL SECTION NO. 9

–D1– STA. 10+00.00 TO –D1– STA. 11+69.61
–D2– STA. 10+00.00 TO –D2– STA. 11+54.38
–D3– STA. 10+00.00 TO –D3– STA. 11+54.92
–D4– STA. 10+00.00 TO –D4– STA. 11+68.40

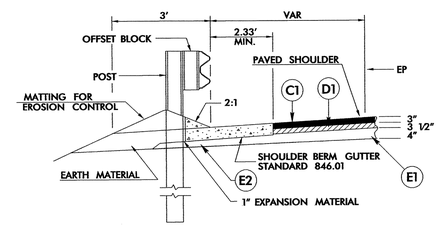

SHOULDER BERM GUTTER DETAIL

–L– STA. 31+87.50 TO –L– STA. 35+50.00 LT
–L– STA. 38+50.00 TO –L– STA. 40+98.00 RT
–L– STA. 47+50.00 TO –L– STA. 49+32.00 LT
–L– STA. 57+25.00 TO –L– STA. 59+50.00 RT
–L– STA. 73+25.00 TO –L– STA. 83+00.00 RT
–L– STA. 76+25.00 TO –L– STA. 83+62.50 LT
–L– STA. 116+12.50 TO –L– STA. 124+25.00 LT
–L– STA. 117+25.00 TO –L– STA. 119+50.00 RT
–L– STA. 140+00.00 TO –L– STA. 142+04.00 RT
–L– STA. 140+50.00 TO –L– STA. 143+87.50 LT
–L– STA. 151+50.00 TO –L– STA. 155+50.00 LT
–L– STA. 153+00.00 TO –L– STA. 154+87.50 RT
–L– STA. 160+25.00 TO –L– STA. 162+75.00 LT
–L– STA. 168+75.00 TO –L– STA. 173+75.00 RT
–L– STA. 169+75.00 TO –L– STA. 173+00.00 LT
–L– STA. 207+75.00 TO –L– STA. 213+50.00 RT
–L– STA. 222+00.00 TO –L– STA. 223+62.50 RT
–L– STA. 222+00.00 TO –L– STA. 223+37.50 LT
–L– STA. 225+12.50 TO –L– STA. 227+50.00 RT
–L– STA. 231+75.00 TO –L– STA. 235+50.00 RT
–L– STA. 233+25.00 TO –L– STA. 236+00.00 LT
–L– STA. 244+75.00 TO –L– STA. 248+00.00 RT
–L– STA. 246+50.00 TO –L– STA. 248+00.00 LT

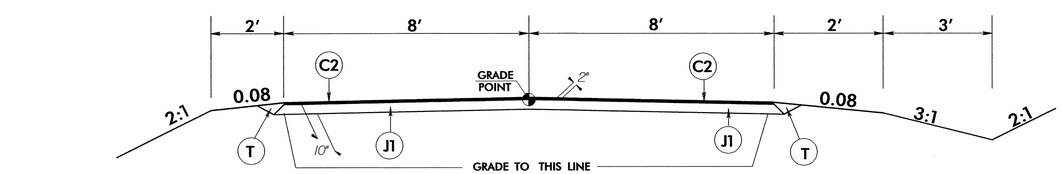

TYPICAL SECTION NO. 10

–D5– STA. 10+00.00 TO –D5– STA. 12+87.37

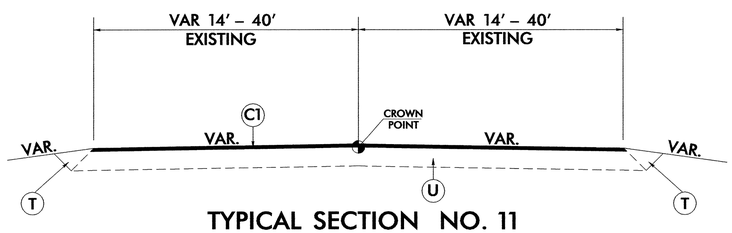

TYPICAL SECTION NO. 11

–L– 11+00.00 TO 14+50.00 (RESURFACE)
–Y1– 10+21.00 TO 11+00.00 (RESURFACE)
–Y2– 16+00.00 TO 16+78.00 (RESURFACE)
–Y4– 10+23.00 TO 11+00.00 (RESURFACE)
–Y5– 20+00.00 TO 20+90.00 (RESURFACE)
–Y6– 10+21.00 TO 11+00.00 (RESURFACE)
–Y7– 16+00.00 TO 17+00.00 (RESURFACE)
–Y8– 10+18.00 TO 10+50.00 (RESURFACE)

PAVEMENT SCHEDULE

C1	PROP. APPROX. 3" ASPHALT CONCRETE SURFACE COURSE, TYPE S9.5B, AT AN AVERAGE RATE OF 168 LBS. PER SQ. YD. IN EACH OF TWO LAYERS.
C2	PROP. APPROX. 2" ASPHALT CONCRETE SURFACE COURSE, TYPE S9.5B, AT AN AVERAGE RATE OF 224 LBS. PER SQ. YD.
C3	PROP. VAR. DEPTH ASPHALT CONCRETE SURFACE COURSE, TYPE S9.5B, AT AN AVERAGE RATE OF 112 LBS. PER SQ. YD. PER 1" DEPTH. TO BE PLACED IN LAYERS NOT TO EXCEED 1½" IN DEPTH.
D1	PROP. APPROX. 3½" ASPHALT CONCRETE INTERMEDIATE COURSE, TYPE I19.0B, AT AN AVERAGE RATE OF 399 LBS. PER SQ. YD.
D2	PROP. APPROX. 2½" ASPHALT CONCRETE INTERMEDIATE COURSE, TYPE I19.0B, AT AN AVERAGE RATE OF 285 LBS. PER SQ. YD.
D3	TYPE I19.0B, AT AN AVERAGE RATE OF 114 LBS. PER SQ. YD. PER 1" DEPTH, TO BE PLACED IN LAYERS NOT LESS THAN 2¼" IN DEPTH OR GREATER THAN 4" IN DEPTH.
E1	PROP. APPROX. 4" ASPHALT CONCRETE BASE COURSE, TYPE B25.0B, AT AN AVERAGE RATE OF 456 LBS. PER SQ. YD.
E2	PROP. VAR. DEPTH ASPHALT CONCRETE BASE COURSE, TYPE B25.0, AT AN AVERAGE RATE OF 114 LBS. PER SQ. YD. PER 1" DEPTH. TO BE PLACED IN LAYERS NOT LESS THAN 3" IN DEPTH OR GREATER THAN 5½" IN DEPTH.
J1	PROP. 8" AGGREGATE BASE COURSE.
R1	2' - 6" CONCRETE CURB AND GUTTER.
R2	8" X 18" CONCRETE CURB.
S	4" CONCRETE SIDEWALK.
T	EARTH MATERIAL.
V	2 ½" DEPTH MILLING BITUMINOUS PAVEMENT.
W	VARIABLE DEPTH ASPHALT PAVEMENT (SEE WEDGING DETAIL)
U	EXISTING PAVEMENT.

NOTE: PAVEMENT EDGE SLOPES ARE 1:1 UNLESS SHOWN OTHERWISE.

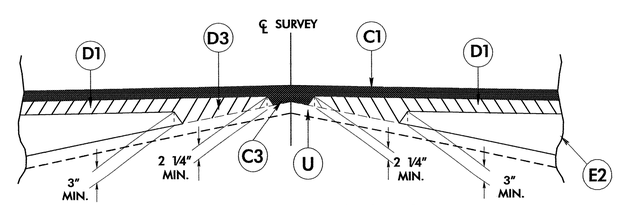

Detail Showing Method of Wedging

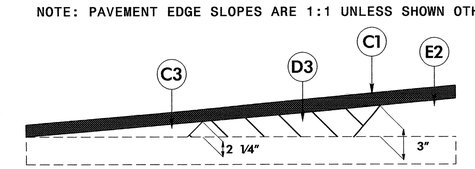

Wedging Detail For Resurfacing

8/17/99
19-APR-2006 16:06
c:\pwwork\24415\d0024415.tup
r2ashaw
24: DJIGAN-224782

PROJECT REFERENCE NO.	SHEET NO.
R-3415	2-C
R/W SHEET NO.	
ROADWAY DESIGN ENGINEER	HYDRAULICS ENGINEER

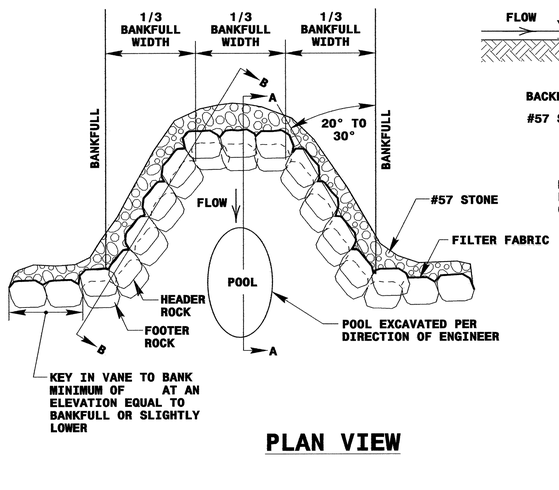

PLAN VIEW

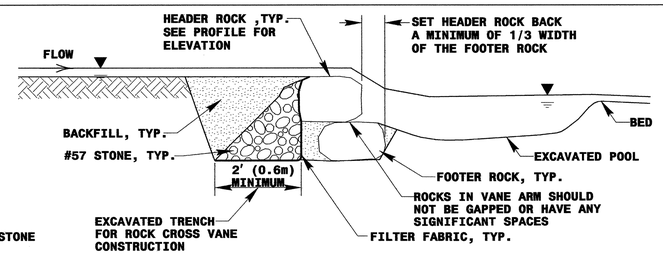

SECTION A-A

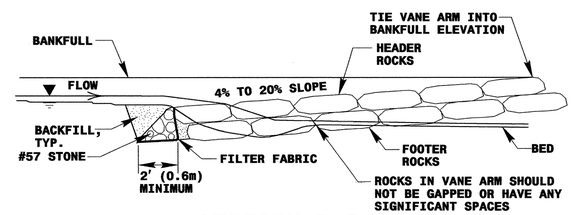

SECTION B-B

PLAN SHEET 9

PLAN SHEET 13

ROCK CROSS VANE DETAIL

NOT TO SCALE

NOTES:
1. DEEPEST PART OF POOL TO BE IN LINE WITH WHERE VANE ARM TIES INTO BANKFULL.
2. DO NOT EXCAVATE POOL TOO CLOSE TO FOOTER BOULDERS.
3. CLASS "A" STONE CAN BE USED TO REDUCE VOIDS BETWEEN HEADERS AND FOOTERS.
4. COMPACT BANKFULL TO EXTENT POSSIBLE OR AT THE DIRECTION OF THE ENGINEER.
5. POOL DEPTH SHOULD BE 2 TO 3 TIMES BANKFULL DEPTH.

PREFORMED SCOUR HOLE

@ STA. 140+41 -L- RT

EST. 8 TONS RR

EST. 38 S.Y. PSRM

PLAN VIEW

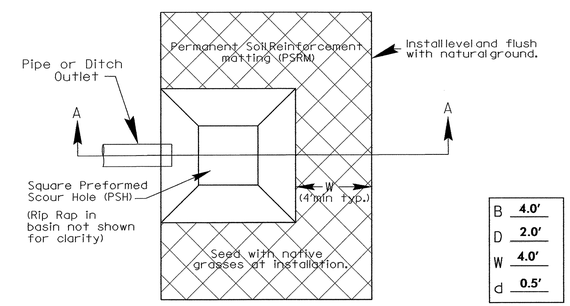

B	4.0'
D	2.0'
W	4.0'
d	0.5'

SECTION A-A

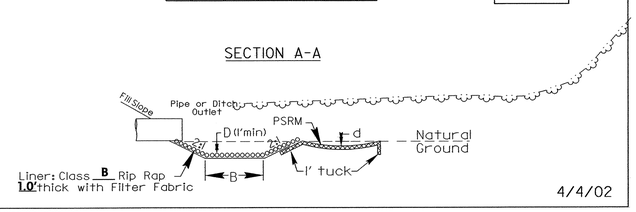

4/4/02

8/17/99

06-JUN-2006 14:08
d:\rdu\tip\rudi_3415.dgn\r3415weir&psh_typ.dgn
bgoodwin

PROJECT REFERENCE NO.	SHEET NO.
R-3415	2-D

CUBIC YARDS IN STANDARD CONCRETE STEPS					
NO. OF STEPS	4' WIDE	5' WIDE	6' WIDE	7' WIDE	ADDITIONAL CU. YDS. PER 1' WIDTH
2	0.4	0.5	0.5	0.6	0.1
3	0.6	0.7	0.8	0.9	0.1
4	0.8	0.9	1.0	1.2	0.1
5	1.0	1.2	1.3	1.4	0.1
6	1.2	1.4	1.5	1.7	0.2
7	1.4	1.6	1.8	2.0	0.2
8	1.6	1.8	2.0	2.3	0.2
9	1.8	2.0	2.3	2.6	0.3
10	2.0	2.3	2.5	2.8	0.3
ADDITIONAL STEP INCREMENT	0.2	0.2	0.2	0.3	0.1

GENERAL NOTES:

USE CLASS "B" CONCRETE THROUGHOUT FOR CONCRETE STEPS.

LOCATIONS AND QUANTITIES SHOWN ARE APPROXIMATE ONLY. EXACT LOCATIONS AND QUANTITIES WILL BE DETERMINED BY THE ENGINEER.

* WHERE STEPS ARE CONSTRUCTED THRU THE RETAINING WALLS, RAISE THE SIDE WALLS OF THE STEPS LEVEL WITH THE TOP OF THE RETAINING WALL. SEE DASHED LINES.

** WHERE SIDEWALKS ARE PROPOSED OR EXISTING, THIS IS TO BE THE TOP OF THE SIDEWALK.

USE UNCORED BRICK.

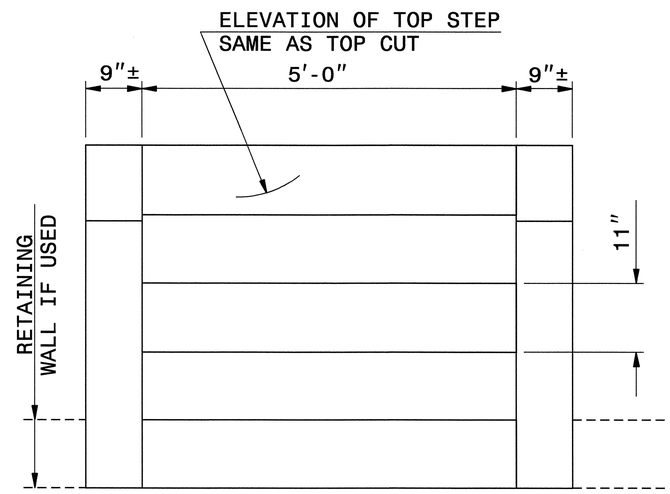

PLAN

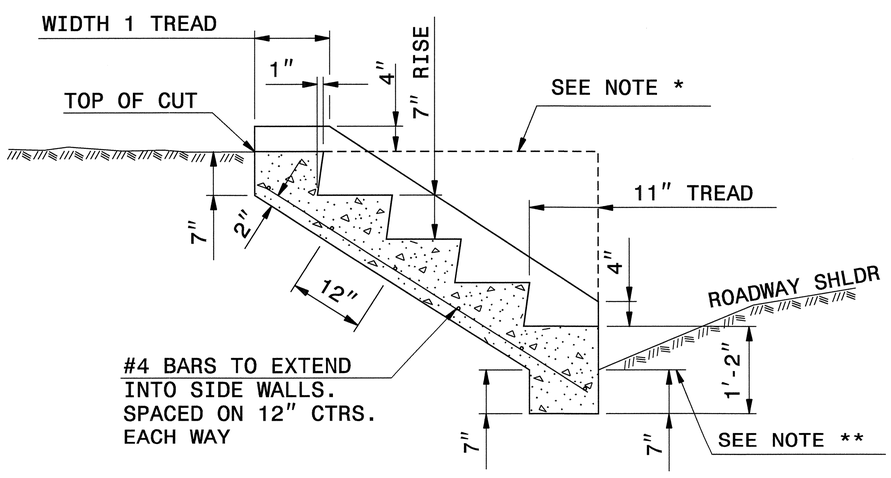

SECTION

CONCRETE STEPS

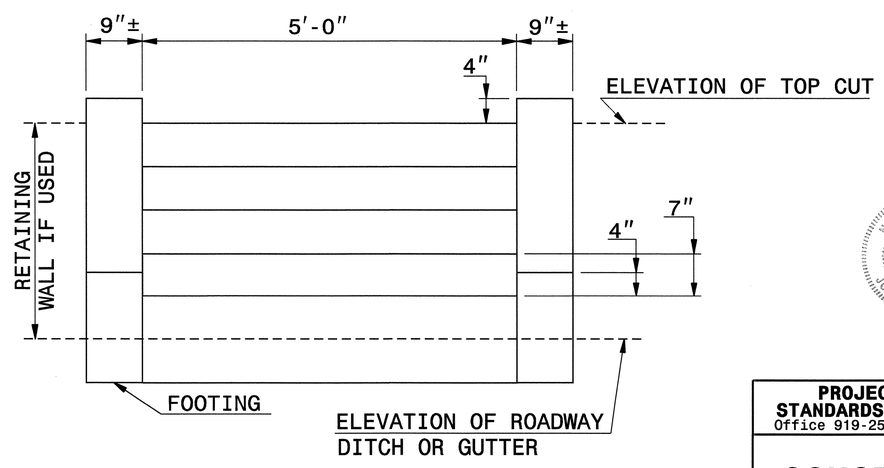

FRONT ELEVATION

NORTH CAROLINA PROFESSIONAL SEAL 022966 ENGINEER JOEL S. HAMPTON
4/27/06

PROJECT SERVICES UNIT
STANDARDS AND SPECIAL DESIGN
Office 919-250-4128 FAX 919-250-4119

CONCRETE STEPS

ORIGINAL BY: 2002 STANDARD DATE: 01-15-02
MODIFIED BY: DATE:
CHECKED BY: DATE: 4/7/06
FILE SPEC.: special details/ericward/stds/084401.dgn

06-APR-2006 14:29
S:\Contracts\Contracts\Special Details\ericward\stds\06 Stds to Special Details\84401 Concrete Steps\084401.dgn
ericward AT PS222293

PROJECT REFERENCE NO.	SHEET NO.
R-3415	2-E

NOTES:

EPOXY BONDING SYSTEM SHALL MEET THE REQUIREMENTS OF SECTION 1081 OF THE STANDARD SPECIFICATIONS AND SHALL BE INSTALLED IN ACCORDANCE WITH THE MANUFACTURERS RECOMMENDATIONS.

CLASS 'B' CONCRETE REQUIRED.

ALL DIMENSIONS SHALL BE VERIFIED IN THE FIELD AND MAY BE ADJUSTED AS DIRECTED BY THE ENGINEER.

ALL EXPOSED CORNERS SHALL BE CHAMFERED 1".

DOWEL BARS SHALL BE INSTALLED AT VARIOUS ANGLES.

BILL OF MATERIAL

BAR	NO.	SIZE	LENGTH	WEIGHT
A	22	#5	2'-6"	57
TOTAL REINF. STEEL (LBS.)				57
CLASS "B" CONC. (C.Y.)				4.0

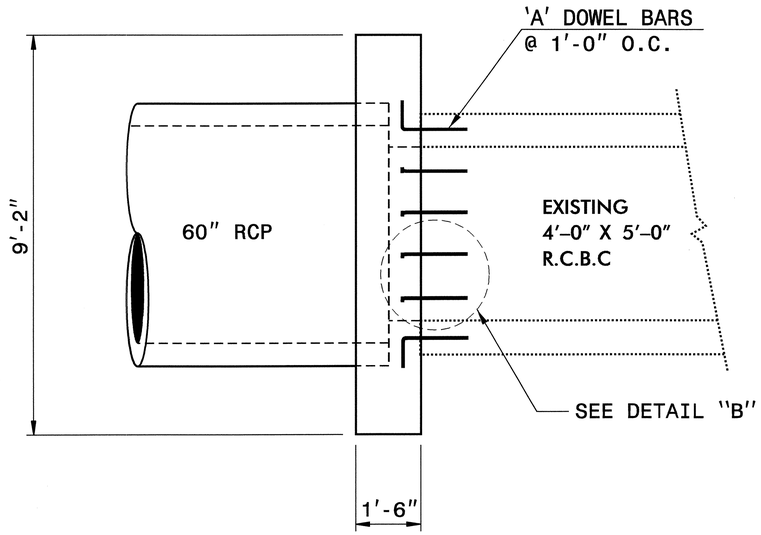

PLAN VIEW

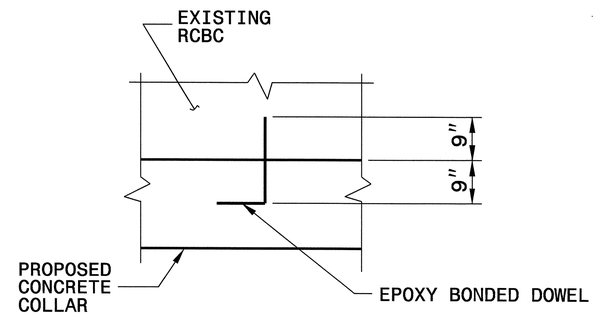

DETAIL 'B'

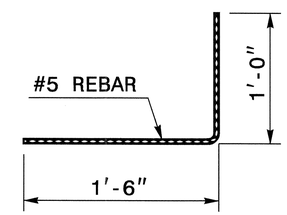

DOWEL 'A'

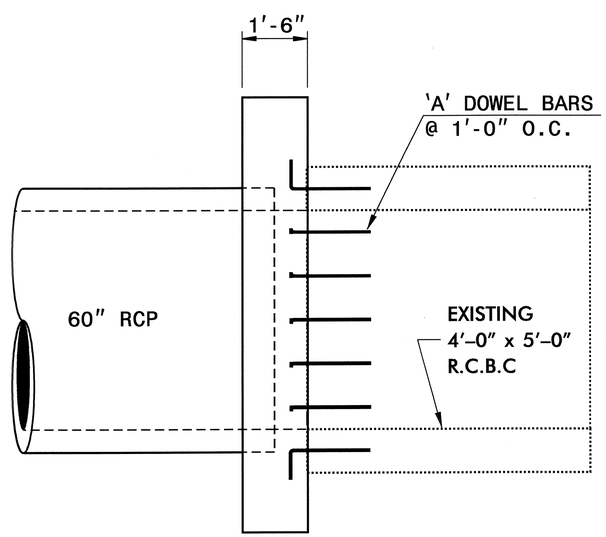

ELEVATION

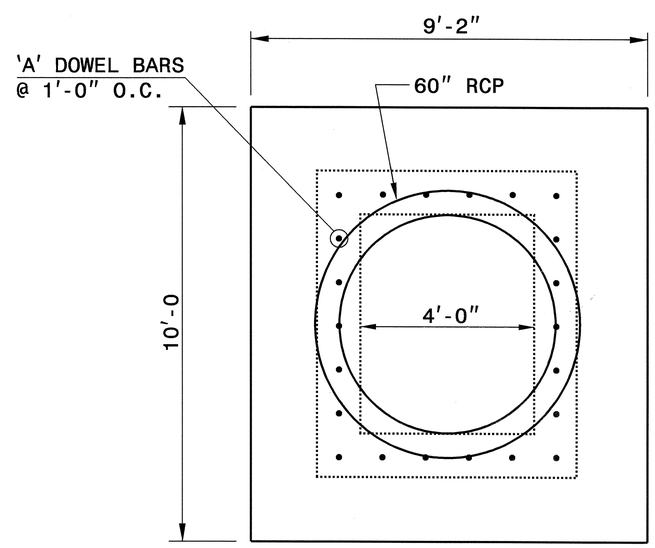

SECTION THROUGH COLLAR
(PIPE TO CULVERT ORIENTATION)

STA. 153+48 -L- RT.

DESIGN SERVICES UNIT
STANDARDS AND SPECIAL DESIGN
Office 919-250-4128 FAX 919-250-4119

DETAIL OF COLLAR CONNECTING EXISTING RCBC TO 60" RCP

ORIGINAL BY: T.Spell DATE: 4-15-04
MODIFIED BY: DATE:
CHECKED BY: DATE: 5/25/04
FILE SPEC.: w:tspell/stand/collar_r3415.dgn

21-APR-2004 10:15
W:\Special Details\tspell\tspell\details\stand\collars_r3415.dgn
tspell AT DS203655

PROJECT REFERENCE NO.	SHEET NO.
R-3415	2-F

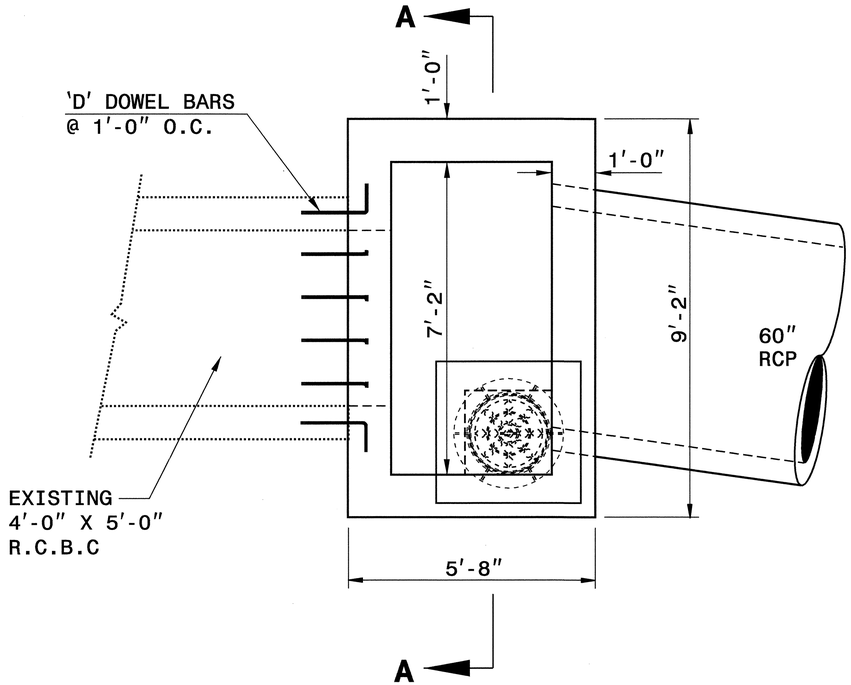

PLAN VIEW

GENERAL NOTES:

-CONSTRUCT THE JUNCTION BOX WITH CLASS "B" OR BETTER CONCRETE.

-CHAMFER ALL EXPOSED CORNERS 1".

-DOWEL 'D' BARS SHALL BE IMBEDDED 1'-0" MINIMUM INTO THE CULVERT WALLS, TOP AND BOTTOM SLABS. DOWELS SHALL BE CHEMICALLY ANCHORED IN ACCORDANCE WITH STRUCTURE SPECIAL PROVISION "ADHESIVELY ANCHORED ANCHOR BOLTS OR DOWELS". DOWEL 'D' BARS SHALL BE ROTATED TO VARIOUS ANGLES WHEN BEING ANCHORED TO OBTAIN GOOD ATTACHMENT BETWEEN THE CULVERT AND COLLAR.

-ALL DIMENSIONS SHOULD BE FIELD VERIFIED.

-CONSTRUCT CONCRETE BOX IN ACCORDANCE WITH SECTION 825 OF THE STANDARD SPECIFICATIONS.

-ADJUST LENGTH OF STEEL BARS AS NEEDED TO COMPENSATE FOR PIPES AND MANHOLE OPENINGS.

-REINFORCING STEEL SHALL CONFORM TO ASTM A 615, GRADE 400.

-CUT OR BEND STEEL BARS AS NEEDED TO PROVIDE 2" CLEARANCE.

-PLACE STEPS 12" ON CENTERS IN ACCORDANCE WITH STD. 840.66.

BILL OF MATERIAL

BAR	NO.	SIZE	LENGTH	WEIGHT
A	70	#5	5'-4"	389
B	55	#5	8'-10"	507
C	46	#5	8'-8"	416
D	34	#5	2'-6"	87
TOTAL REINF. STEEL (LBS.)				1399
CLASS "B" CONC. (C.Y.)				10.1

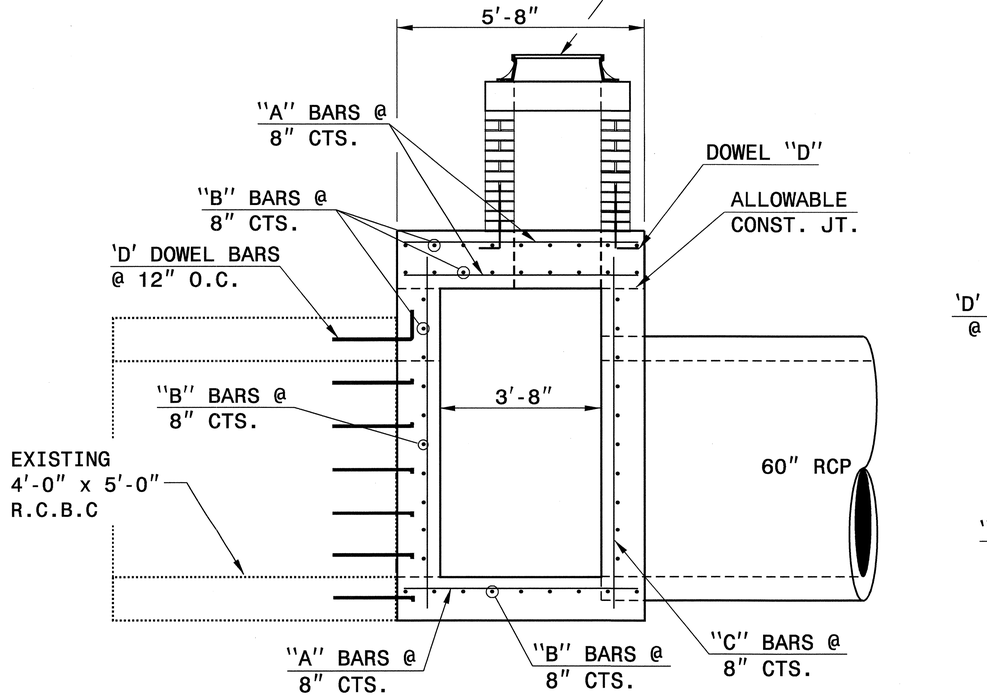

ELEVATION

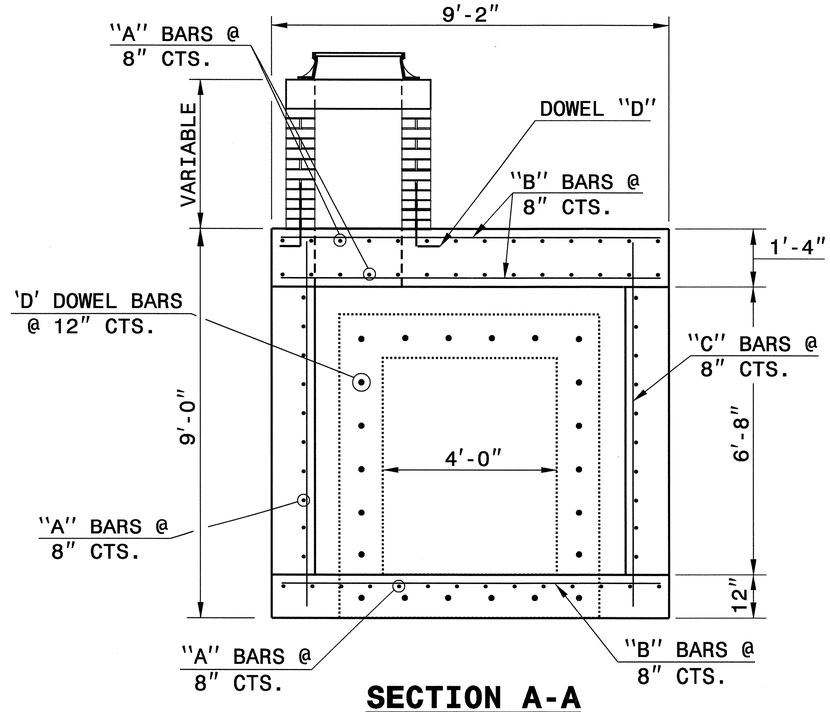

SECTION A-A

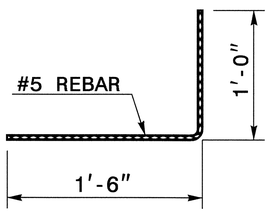

DOWEL 'D'

NORTH CAROLINA PROFESSIONAL SEAL 022966 ENGINEER JOEL S. HUNT 4/27/06

STA. 153+48 -L-(LT.)
STA. 222+43 -L-(RT.)

DESIGN SERVICES UNIT
STANDARDS AND SPECIAL DESIGN
Office 919-250-4128 FAX 919-250-4119

DETAIL OF JUNCTION BOX CONNECTING EXISTING RCBC TO 60"RCP W/MANHOLE

ORIGINAL BY: T.Spell DATE: 1-16-03
MODIFIED BY: DATE:
CHECKED BY: DATE: 5/25/04
FILE SPEC.: w:tspell/stand/col&boxes_r3415.dgn

DS203655 Thursday May 06 2004 collars_r3415.m

PROJECT REFERENCE NO.	SHEET NO.
R-3415	2-G

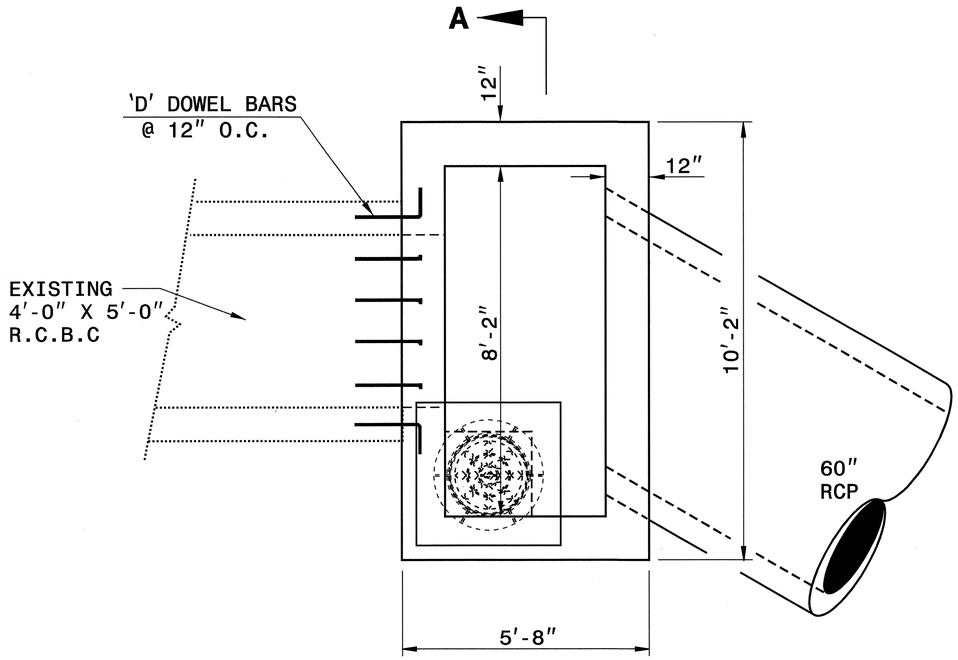

PLAN VIEW

GENERAL NOTES:

-CONSTRUCT THE JUNCTION BOX WITH CLASS "B" OR BETTER CONCRETE.

-CHAMFER ALL EXPOSED CORNERS 1".

-DOWEL 'D' BARS SHALL BE IMBEDDED 1'-0" MINIMUM INTO THE CULVERT WALLS, TOP AND BOTTOM SLABS. DOWELS SHALL BE CHEMICALLY ANCHORED IN ACCORDANCE WITH STRUCTURE SPECIAL PROVISION "ADHESIVELY ANCHORED ANCHOR BOLTS OR DOWELS". DOWEL 'D' BARS SHALL BE ROTATED TO VARIOUS ANGLES WHEN BEING ANCHORED TO OBTAIN GOOD ATTACHMENT BETWEEN THE CULVERT AND COLLAR.

-ALL DIMENSIONS SHOULD BE FIELD VERIFIED.

-CONSTRUCT CONCRETE BOX IN ACCORDANCE WITH SECTION 825 OF THE STANDARD SPECIFICATIONS.

-ADJUST LENGTH OF STEEL BARS AS NEEDED TO COMPENSATE FOR PIPES AND MANHOLE OPENINGS.

-REINFORCING STEEL SHALL CONFORM TO ASTM A 615, GRADE 400.

-CUT OR BEND STEEL BARS AS NEEDED TO PROVIDE 2" CLEARANCE.

-PLACE STEPS 12" ON CENTERS IN ACCORDANCE WITH STD. 840.66.

BILL OF MATERIAL

BAR	NO.	SIZE	LENGTH	WEIGHT
A	73	#5	5'-4"	406
B	55	#5	9'-10"	564
C	58	#5	8'-8"	524
D	34	#5	2'-6"	89
TOTAL REINF. STEEL (LBS.)				1583
CLASS "B" CONC. (C.Y.)				9.8

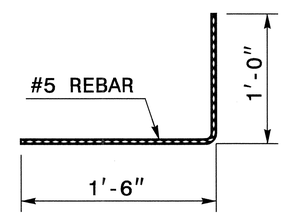

DOWEL 'D'

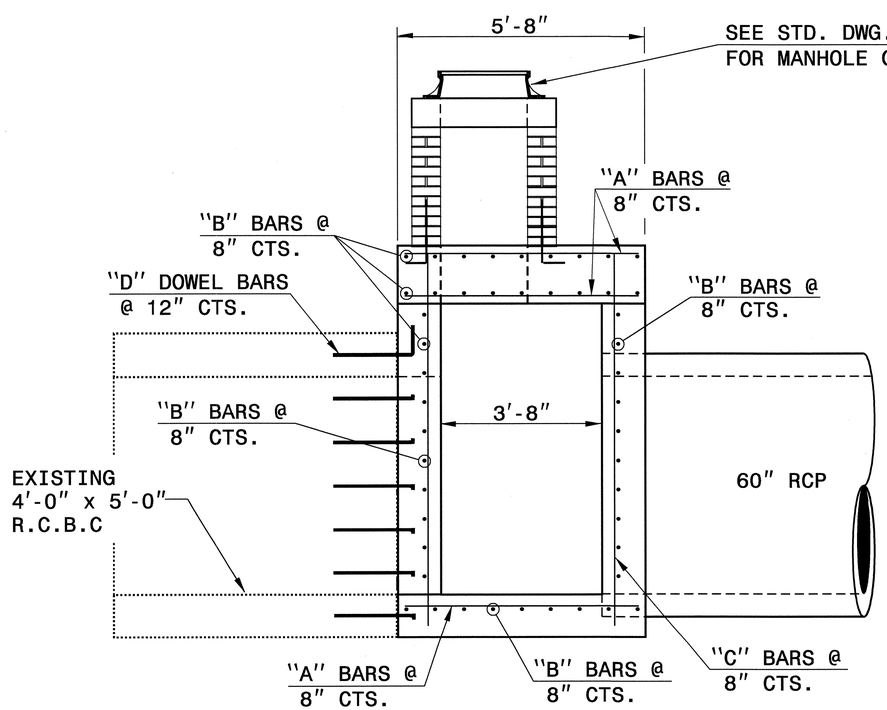

ELEVATION

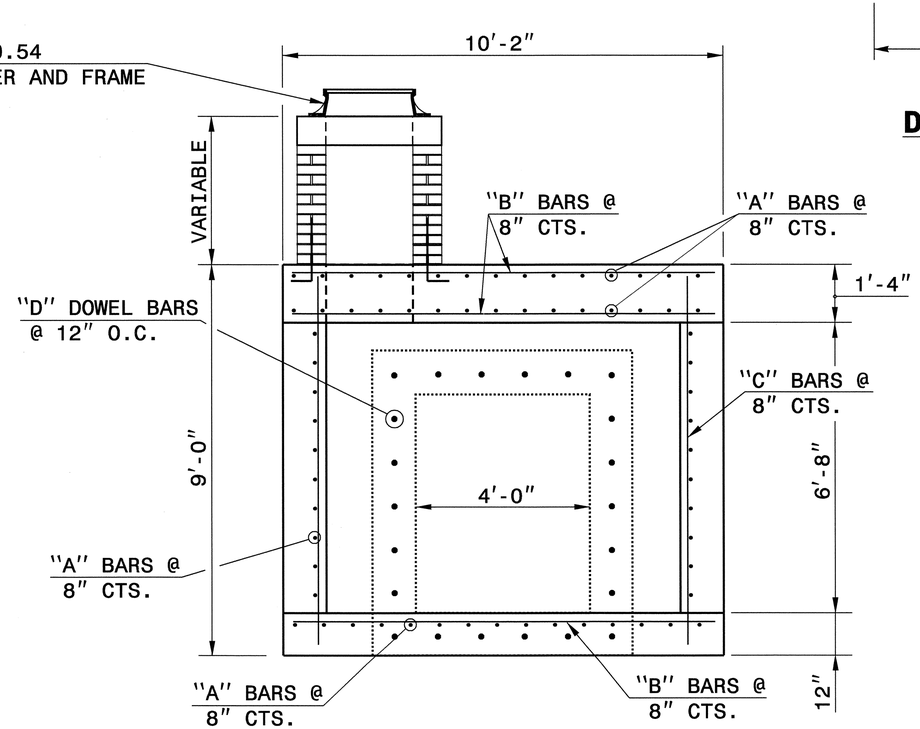

SECTION A-A

STA. 222+43 -L- (LT.)

DESIGN SERVICES UNIT
STANDARDS AND SPECIAL DESIGN
Office 919-250-4128 FAX 919-250-4119

DETAIL OF JUNCTION BOX CONNECTING EXISTING RCBC TO 60"RCP W/MANHOLE

ORIGINAL BY: T.Spell DATE: 5-4-04
MODIFIED BY: DATE:
CHECKED BY: DATE: 5/25/04
FILE SPEC.: w:\tspell/stand/col&boxes_r3415.dgn

10-MAY-2004 12:19
W:\Proj-2001\Details\tspell\tspell\details\stand\collars_r3415.dgn
tspell AT DS203655

PROJECT REFERENCE NO.	SHEET NO.
R-3415	2-H

NOTES:

EPOXY BONDING SYSTEM SHALL MEET THE REQUIREMENTS OF SECTION 1081 OF THE STANDARD SPECIFICATIONS AND SHALL BE INSTALLED IN ACCORDANCE WITH THE MANUFACTURERS RECOMMENDATIONS.

CLASS 'B' CONCRETE REQUIRED.

ALL DIMENSIONS SHALL BE VERIFIED IN THE FIELD AND MAY BE ADJUSTED AS DIRECTED BY THE ENGINEER.

ALL EXPOSED CORNERS SHALL BE CHAMFERED 1".

DOWEL BARS SHALL BE INSTALLED AT VARIOUS ANGLES.

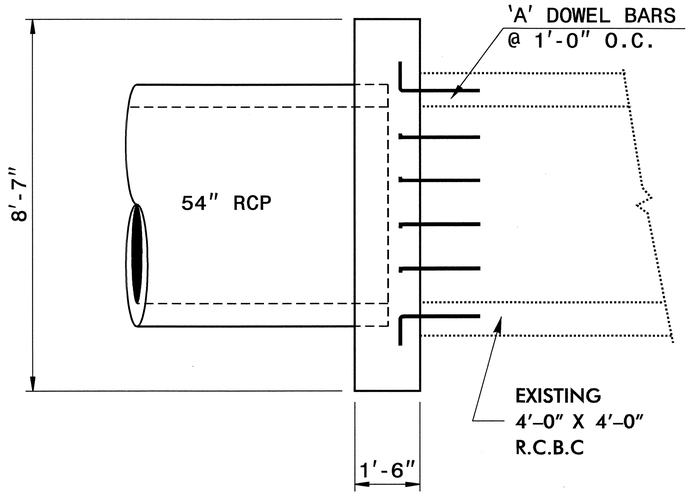

PLAN VIEW

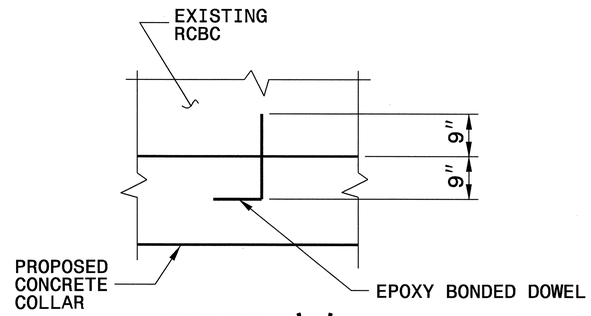

DETAIL 'B'

BILL OF MATERIAL

BAR	NO.	SIZE	LENGTH	WEIGHT
A	20	#5	2'-6"	52
TOTAL REINF. STEEL (LBS.)				52
CLASS "B" CONC. (C.Y.)				3.0

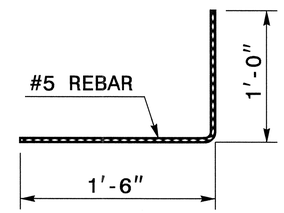

DOWEL 'A'

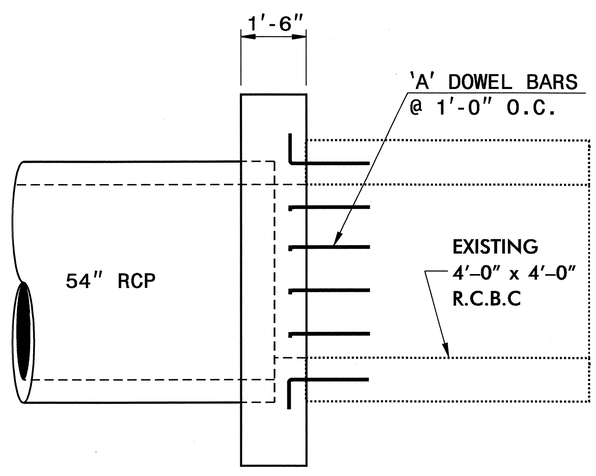

ELEVATION

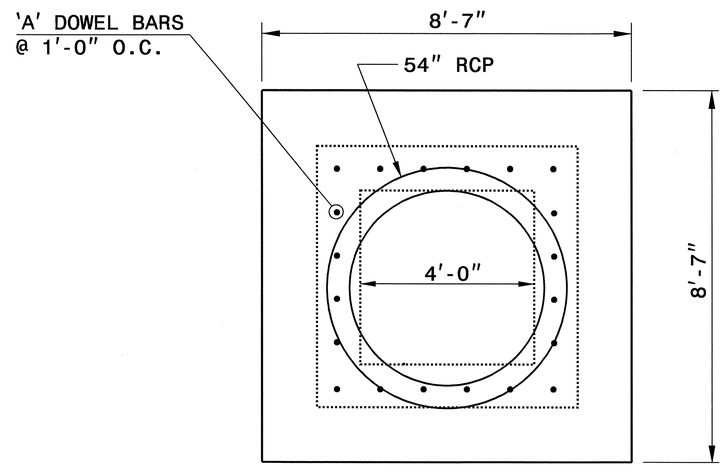

SECTION THROUGH COLLAR

(PIPE TO CULVERT ORIENTATION)

STA. 225+60 -L- (LT.&RT.)
STA. 233+95 -L- (RT.)

DESIGN SERVICES UNIT
STANDARDS AND SPECIAL DESIGN
Office 919-250-4128 FAX 919-250-4119

DETAIL OF COLLAR CONNECTING EXISTING RCBC TO 54" RCP

ORIGINAL BY: T.Spell DATE: 5-4-04
MODIFIED BY: DATE:
CHECKED BY: DATE: 5/25/04
FILE SPEC.: w:\tspell/stand/collar r3415.dgn

5/14/93
10-MAY-2004 12:18
W:\Special Details\tspell\tspell\details\stand\collars_r3415.dgn
tspell AT DS203655
DS203655 Monday May 10 2004 collars_r3415.m

PROJECT REFERENCE NO.	SHEET NO.
R-3415	2-I

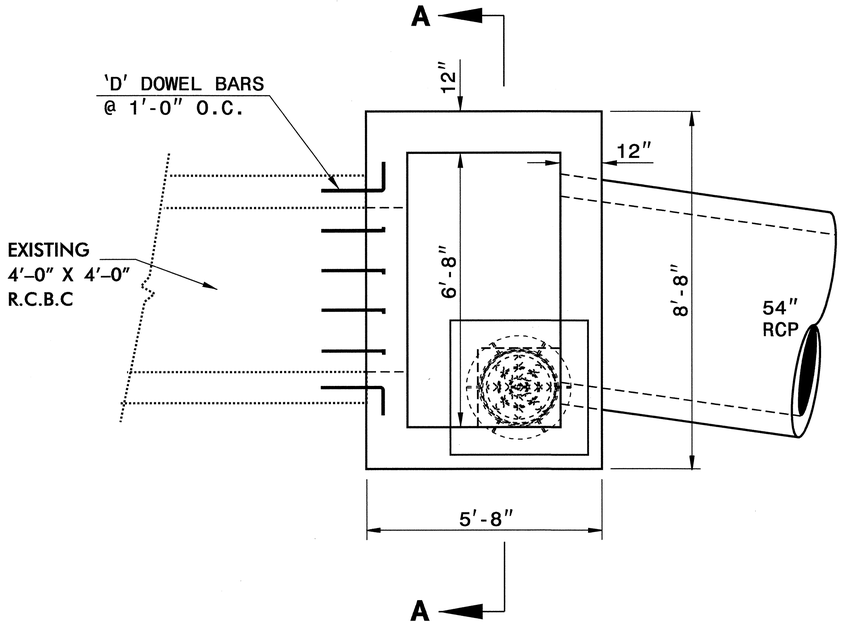

PLAN VIEW

GENERAL NOTES:

-CONSTRUCT THE JUNCTION BOX WITH CLASS "B" OR BETTER CONCRETE.

-CHAMFER ALL EXPOSED CORNERS 1".

-DOWEL 'D' BARS SHALL BE IMBEDDED 1'-0" MINIMUM INTO THE CULVERT WALLS, TOP AND BOTTOM SLABS. DOWELS SHALL BE CHEMICALLY ANCHORED IN ACCORDANCE WITH STRUCTURE SPECIAL PROVISION "ADHESIVELY ANCHORED ANCHOR BOLTS OR DOWELS". DOWEL 'D' BARS SHALL BE ROTATED TO VARIOUS ANGLES WHEN BEING ANCHORED TO OBTAIN GOOD ATTACHMENT BETWEEN THE CULVERT AND COLLAR.

-ALL DIMENSIONS SHOULD BE FIELD VERIFIED.

-CONSTRUCT CONCRETE BOX IN ACCORDANCE WITH SECTION 825 OF THE STANDARD SPECIFICATIONS.

-ADJUST LENGTH OF STEEL BARS AS NEEDED TO COMPENSATE FOR PIPES AND MANHOLE OPENINGS.

-REINFORCING STEEL SHALL CONFORM TO ASTM A 615, GRADE 400.

-CUT OR BEND STEEL BARS AS NEEDED TO PROVIDE 2" CLEARANCE.

-PLACE STEPS 12" ON CENTERS IN ACCORDANCE WITH STD. 840.66.

BILL OF MATERIAL

BAR	NO.	SIZE	LENGTH	WEIGHT
A	65	#5	5'-4"	362
B	58	#5	8'-4"	461
C	44	#5	8'-0"	367
D	32	#5	2'-6"	83
TOTAL REINF. STEEL (LBS.)				1273
CLASS "B" CONC. (C.Y.)				8.4

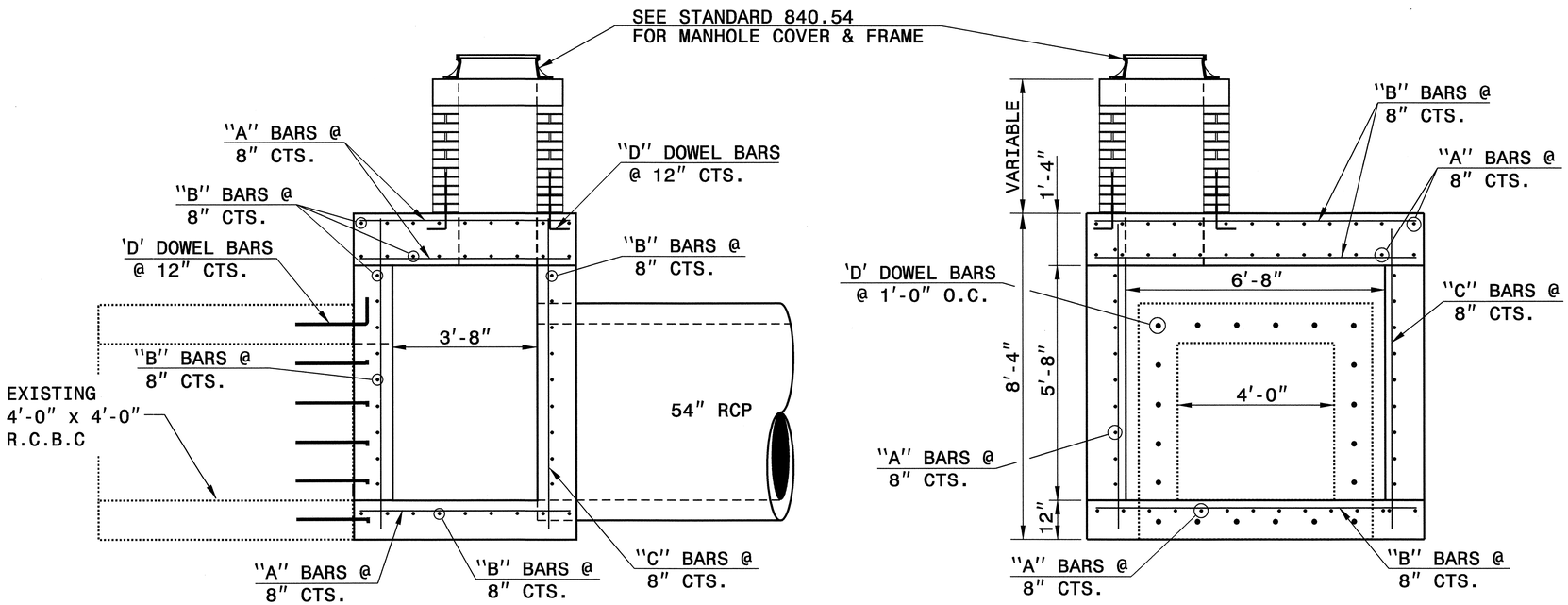

ELEVATION

SECTION A-A

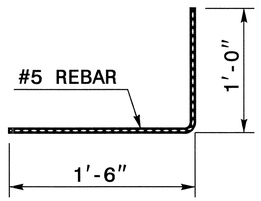

DOWEL 'D'

NORTH CAROLINA PROFESSIONAL SEAL 022966 ENGINEER JOEL S. HOWERTON
4/27/06

STA. 233+95-L-(RT.)

DESIGN SERVICES UNIT
STANDARDS AND SPECIAL DESIGN
Office 919-250-4128 FAX 919-250-4119

DETAIL OF JUNCTION BOX CONNECTING EXISTING RCBC TO 54"RCP W/MANHOLE

ORIGINAL BY: T.Spell DATE: 5-4-04
MODIFIED BY: DATE:
CHECKED BY: DATE: 5/25/04
FILE SPEC.: w:tspell/stand/col&boxes_r3415.dgn

06-MAY-2004 11:24
W:\Special Details\tspell\tspell\details\stand\collars_r3415.dgn
tspell AT DS203655

5/14/99

DS203655 Thursday May 06 2004 collars_r3415.m

PROJECT REFERENCE NO.	SHEET NO.
R-3415	2-J

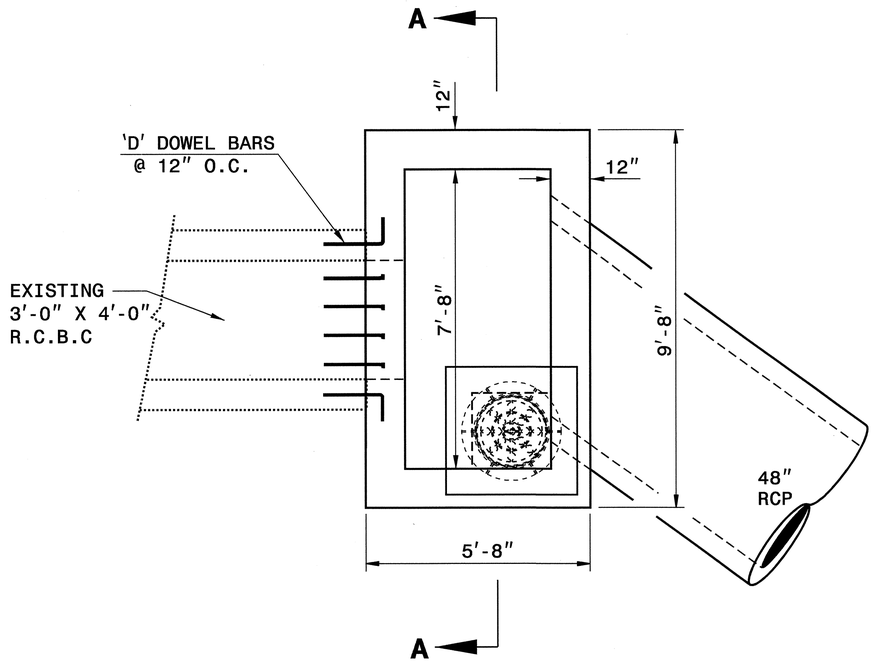

PLAN VIEW

GENERAL NOTES:

-CONSTRUCT THE JUNCTION BOX WITH CLASS "B" OR BETTER CONCRETE.

-CHAMFER ALL EXPOSED CORNERS 1".

-DOWEL 'D' BARS SHALL BE IMBEDDED 1'-0" MINIMUM INTO THE CULVERT WALLS, TOP AND BOTTOM SLABS. DOWELS SHALL BE CHEMICALLY ANCHORED IN ACCORDANCE WITH STRUCTURE SPECIAL PROVISION "ADHESIVELY ANCHORED ANCHOR BOLTS OR DOWELS". DOWEL 'D' BARS SHALL BE ROTATED TO VARIOUS ANGLES WHEN BEING ANCHORED TO OBTAIN GOOD ATTACHMENT BETWEEN THE CULVERT AND COLLAR.

-ALL DIMENSIONS SHOULD BE FIELD VERIFIED.

-CONSTRUCT CONCRETE BOX IN ACCORDANCE WITH SECTION 825 OF THE STANDARD SPECIFICATIONS.

-ADJUST LENGTH OF STEEL BARS AS NEEDED TO COMPENSATE FOR PIPES AND MANHOLE OPENINGS.

-REINFORCING STEEL SHALL CONFORM TO ASTM A 615, GRADE 400.

-CUT OR BEND STEEL BARS AS NEEDED TO PROVIDE 2" CLEARANCE.

-PLACE STEPS 12" ON CENTERS IN ACCORDANCE WITH STD. 840.66.

BILL OF MATERIAL

BAR	NO.	SIZE	LENGTH	WEIGHT
A	69	#5	9'-4"	672
B	51	#5	5'-4"	284
C	48	#5	7'-6"	375
D	32	#5	2'-6"	839
TOTAL REINF. STEEL (LBS.)				2170
CLASS "B" CONC. (C.Y.)				8.6

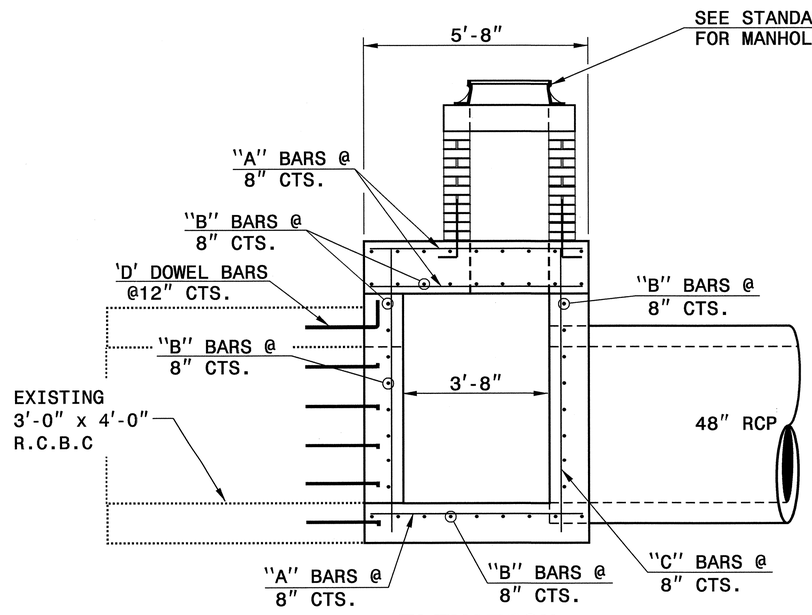

ELEVATION

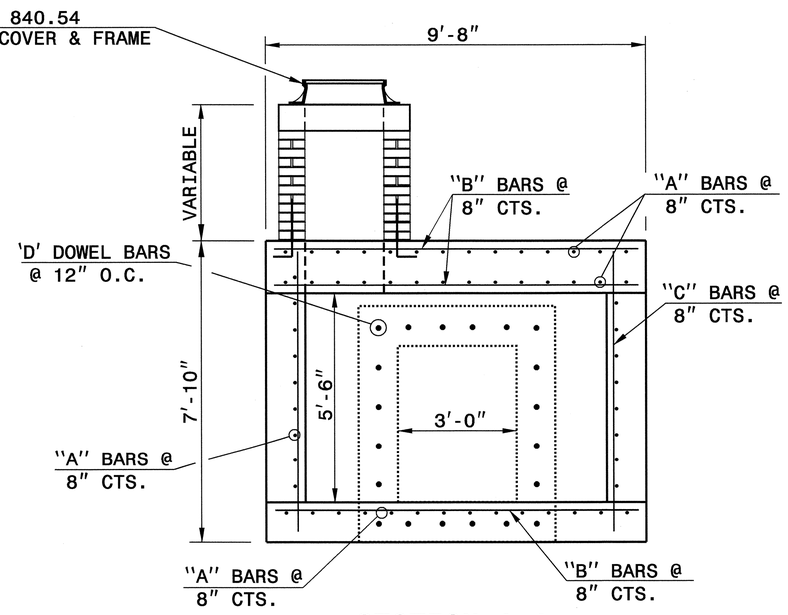

SECTION A-A

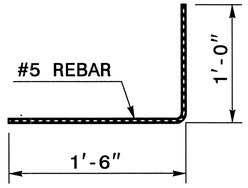

DOWEL 'A'

NORTH CAROLINA PROFESSIONAL SEAL 022966 ENGINEER JOEL S. HUNT
4/27/06

STA. 246+75 -L-(LT.&RT.)

DESIGN SERVICES UNIT
STANDARDS AND SPECIAL DESIGN
Office 919-250-4128 FAX 919-250-4119

DETAIL OF JUNCTION BOX CONNECTING EXISTING RCBC TO 48"RCP W/MANHOLE

ORIGINAL BY: T.Spell DATE: 5-5-04
MODIFIED BY: DATE:
CHECKED BY: DATE: 5/25/04
FILE SPEC.: w:tspell/stand/col&boxes r3415.dgn

06-MAY-2004 11:24
W:\Special Details\tspell\tspell\details\stand\collars_r3415.dgn
tspell AT DS203655

5/28/99

PROJECT REFERENCE NO.	SHEET NO.
R-3415	3

(SHEET 1 OF 2)

STATE OF NORTH CAROLINA
DIVISION OF HIGHWAYS

SUMMARY OF QUANTITIES

STATE OF NORTH CAROLINA
DIVISION OF HIGHWAYS
ROADWAY SUMMARY OF QUANTITIES FOR CONTRACT - C201188

ItemNumber	Sec #	Quantity	Unit	Description
0000100000-N	800	Lump Sum		MOBILIZATION
0001000000-E	200	Lump Sum		CLEARING & GRUBBING .. ACRE(S)
0008000000-E	200	3	ACR	SUPPLEMENTARY CLEARING & GRUBBING
0022000000-E	225	64,500	CY	UNCLASSIFIED EXCAVATION
0036000000-E	225	5,000	CY	UNDERCUT EXCAVATION
0080000000-E	SP	500	TON	CLASS IV SUBGRADE STABILIZATION
0106000000-E	230	29,000	CY	BORROW EXCAVATION
0134000000-E	240	4,000	CY	DRAINAGE DITCH EXCAVATION
0141000000-E	240	550	LF	BERM DITCH CONSTRUCTION
0156000000-E	250	950	SY	REMOVAL OF EXISTING ASPHALT PAVEMENT
0195000000-E	265	2,000	CY	SELECT GRANULAR MATERIAL
0196000000-E	270	2,000	SY	FABRIC FOR SOIL STABILIZATION
0318000000-E	300	1,000	TON	FOUNDATION CONDITIONING MATERIAL, MINOR STRS
0343000000-E	310	1,232	LF	15" SIDE DRAIN PIPE
0344000000-E	310	576	LF	18" SIDE DRAIN PIPE
0345000000-E	310	32	LF	24" SIDE DRAIN PIPE
0384000000-E	310	64	LF	30" RC PIPE CULVERTS, CLASS III
0390000000-E	310	228	LF	36" RC PIPE CULVERTS, CLASS III
0402000000-E	310	88	LF	48" RC PIPE CULVERTS, CLASS III
0408000000-E	310	104	LF	54" RC PIPE CULVERTS, CLASS III
0414000000-E	310	100	LF	60" RC PIPE CULVERTS, CLASS III
0536000000-E	SP	30	LF	***" HDPE PIPE CULVERTS (12")
0708000000-E	310	1,080	LF	15" BIT COAT CS PIPE CULVERTS, TYPE B 0.064" THICK
0714000000-E	310	296	LF	18" BIT COAT CS PIPE CULVERTS, TYPE B 0.064" THICK
0806000000-E	310	58	EA	15" BIT COAT CS PIPE ELBOWS, TYPE B 0.064" THICK
0807000000-E	310	6	EA	18" BIT COAT CS PIPE ELBOWS, TYPE B 0.064" THICK
0973100000-E	330	148	LF	**" WELDED STEEL PIPE IN SOIL (18")
0973100000-E	330	161	LF	**" WELDED STEEL PIPE IN SOIL (24")
0973100000-E	330	100	LF	**" WELDED STEEL PIPE IN SOIL (30")
0995000000-E	340	2,821	LF	PIPE REMOVAL
1011000000-N	500	Lump Sum		FINE GRADING
1022000000-E	SP	4,500	LB	SEALING EXISTING PAVEMENT CRACKS
1077000000-E	SP	20	TON	#57 STONE
1110000000-E	510	450	TON	STABILIZER AGGREGATE
1121000000-E	520	700	TON	AGGREGATE BASE COURSE
1220000000-E	545	1,000	TON	INCIDENTAL STONE BASE
1297000000-E	607	1,500	SY	MILLING ASPHALT PAVEMENT, ***" DEPTH (2")
1297000000-E	607	62,000	SY	MILLING ASPHALT PAVEMENT, ***" DEPTH (2-1/2")
1330000000-E	607	1,000	SY	INCIDENTAL MILLING
1489000000-E	610	11,000	TON	ASPHALT CONC BASE COURSE, TYPE B25.0B
1498000000-E	610	22,000	TON	ASPHALT CONC INTERMEDIATE COURSE, TYPE I19.0B
1519000000-E	610	22,000	TON	ASPHALT CONC SURFACE COURSE, TYPE S9.5B
1560000000-E	620	2,830	TON	ASPHALT BINDER FOR PLANT MIX, GRADE PG 64-22
1693000000-E	654	250	TON	ASPHALT PLANT MIX, PAVEMENT REPAIR
2000000000-N	806	117	EA	RIGHT OF WAY MARKERS
2022000000-E	815	450	CY	SUBDRAIN EXCAVATION
2033000000-E	815	350	CY	SUBDRAIN FINE AGGREGATE
2044000000-E	815	2,000	LF	6" PERFORATED SUBDRAIN PIPE
2055000000-E	815	60	EA	6" SUBDRAIN PIPE WYES, TEES, & ELBOWS
2066000000-N	815	4	EA	CONCRETE PAD FOR SUBDRAIN PIPE OUTLET
2077000000-E	815	24	LF	6" OUTLET PIPE (SUBDRAINS)
2209000000-E	838	16	CY	ENDWALLS
2220000000-E	838	22.5	CY	REINFORCED ENDWALLS
2253000000-E	840	27	CY	PIPE COLLARS
2264000000-E	840	0.6	CY	PIPE PLUGS
2286000000-N	840	81	EA	MASONRY DRAINAGE STRUCTURES
2297000000-E	840	38.4	CY	MASONRY DRAINAGE STRUCTURES
2308000000-E	840	37	LF	MASONRY DRAINAGE STRUCTURES
2364000000-N	840	13	EA	FRAME WITH TWO GRATES, STD 840.16
2366000000-N	840	19	EA	FRAME WITH TWO GRATES, STD 840.24
2367000000-N	840	27	EA	FRAME WITH TWO GRATES, STD 840.29
2374000000-N	840	3	EA	FRAME WITH GRATE & HOOD, STD 840.03, TYPE ** (E)
2374000000-N	840	7	EA	FRAME WITH GRATE & HOOD, STD 840.03, TYPE ** (F)
2374000000-N	840	6	EA	FRAME WITH GRATE & HOOD, STD 840.03, TYPE ** (G)
2396000000-N	840	9	EA	FRAME WITH COVER, STD 840.54
2535000000-E	846	1,275	LF	**"X **" CONCRETE CURB (8" X 18")
2549000000-E	846	3,400	LF	2'-6" CONCRETE CURB & GUTTER
2556000000-E	846	8,300	LF	SHOULDER BERM GUTTER
2591000000-E	848	2,150	SY	4" CONCRETE SIDEWALK
2605000000-N	848	8	EA	CONCRETE WHEELCHAIR RAMPS
2612000000-E	848	350	SY	6" CONCRETE DRIVEWAY
2619000000-E	850	15	SY	4" CONCRETE PAVED DITCH
2655000000-E	852	60	SY	5" MONOLITHIC CONCRETE ISLANDS (KEYED IN)
2745000000-E	SP	10	CY	GENERIC PAVING ITEM CONCRETE STEPS
2830000000-N	858	4	EA	ADJUSTMENT OF MANHOLES
2845000000-N	858	20	EA	ADJUSTMENT OF METER BOXES OR VALVE BOXES
3030000000-E	862	11,887.5	LF	STEEL BM GUARDRAIL
3045000000-E	862	100	LF	STEEL BM GUARDRAIL, SHOP CURVED
3150000000-N	862	10	EA	ADDITIONAL GUARDRAIL POSTS
3195000000-N	862	1	EA	GUARDRAIL ANCHOR UNITS, TYPE AT-1
3270000000-N	SP	61	EA	GUARDRAIL ANCHOR UNITS, TYPE 350
3503000000-E	866	170	LF	WOVEN WIRE FENCE, 47" FABRIC
3509000000-E	866	7	EA	4" TIMBER FENCE POSTS, 7'-6" LONG
3515000000-E	866	10	EA	5" TIMBER FENCE POSTS, 8'-0" LONG
3557000000-E	866	100	LF	ADDITIONAL BARBED WIRE
3559000000-E	866	800	LF	** STRAND BARBED WIRE FENCE WITH POSTS (4)
3628000000-E	876	1,500	TON	RIP RAP, CLASS I
3642000000-E	876	10	TON	RIP RAP, CLASS A
3649000000-E	876	650	TON	RIP RAP, CLASS B
3651000000-E	SP	81	TON	BOULDERS
3656000000-E	876	6,850	SY	FILTER FABRIC FOR DRAINAGE
3659000000-N	SP	2	EA	PREFORMED SCOUR HOLES WITH LEVEL SPREADER APRON
4400000000-E	1110	805	SF	WORK ZONE SIGNS (STATIONARY)
4405000000-E	1110	512	SF	WORK ZONE SIGNS (PORTABLE)
4410000000-E	1110	74	SF	WORK ZONE SIGNS (BARRICADE MOUNTED)
4430000000-N	1130	280	EA	DRUMS
4435000000-N	1135	25	EA	CONES
4445000000-E	1145	72	LF	BARRICADES (TYPE III)
4450000000-N	1150	4,928	HR	FLAGGER
4480000000-N	1165	2	EA	TMIA
4650000000-N	1251	705	EA	TEMPORARY RAISED PAVEMENT MARKERS
4685000000-E	1205	55,225	LF	THERMOPLASTIC PAVEMENT MARKING LINES (4", 90 MILS)
4686000000-E	1205	68,061	LF	THERMOPLASTIC PAVEMENT MARKING LINES (4", 120 MILS)
4695000000-E	1205	500	LF	THERMOPLASTIC PAVEMENT MARKING LINES (8", 90 MILS)
4710000000-E	1205	250	LF	THERMOPLASTIC PAVEMENT MARKING LINES (24", 120 MILS)
4725000000-E	1205	52	EA	THERMOPLASTIC PAVEMENT MARKING SYMBOL (90 MILS)
4810000000-E	1205	493,145	LF	PAINT PAVEMENT MARKING LINES (4")
4820000000-E	1205	2,000	LF	PAINT PAVEMENT MARKING LINES (8")
4835000000-E	1205	1,000	LF	PAINT PAVEMENT MARKING LINES (24")
4845000000-N	1205	104	EA	PAINT PAVEMENT MARKING SYMBOL
4850000000-E	1205	900	LF	REMOVAL OF PAVEMENT MARKING LINES (4")
4905000000-N	1253	685	EA	SNOWPLOWABLE PAVEMENT MARKERS
5882000000-N	SP	4	EA	GENERIC UTILITY ITEM 10" GATE VALVE & VALVE BOX, 200# WP
5882000000-N	SP	1	EA	GENERIC UTILITY ITEM 10" TRANSITION COUPLING, PVC TO AC
5882000000-N	SP	8	EA	GENERIC UTILITY ITEM 10" X 3/4" TAPPING SADDLE
5882000000-N	SP	1	EA	GENERIC UTILITY ITEM 2" GATE VALVE & VALVE BOX, 200# WP
5882000000-N	SP	8	EA	GENERIC UTILITY ITEM 3/4" CORPORATION STOP
5882000000-N	SP	1	EA	GENERIC UTILITY ITEM 4" GATE VALVE & VALVE BOX, 200# WP
5882000000-N	SP	2	EA	GENERIC UTILITY ITEM 6" FLEXIBLE COUPLING, DI TO TC
5882000000-N	SP	4	EA	GENERIC UTILITY ITEM 6" GATE VALVE & VALVE BOX, 200# WP
5882000000-N	SP	1,703	EA	GENERIC UTILITY ITEM CEMENT GROUT FOR FILLING 10" AC ABANDONED WATER PIPE
5882000000-N	SP	2	EA	GENERIC UTILITY ITEM RELOCATE EXISTING FIRE HYDRANT
5882000000-N	SP	14	EA	GENERIC UTILITY ITEM RELOCATE EXISTING WATER METER
5882000000-N	SP	2	EA	GENERIC UTILITY ITEM THRUST COLLAR
5888000000-E	SP	1,740	LF	GENERIC UTILITY ITEM 10" PVC WATER PIPE, SDR 21, 200# WP
5888000000-E	SP	17	LF	GENERIC UTILITY ITEM 2" PVC WATER PIPE, SDR 21, 200# WP
5888000000-E	SP	345	LF	GENERIC UTILITY ITEM 3/4" COPPER WATER PIPE, TYPE K
5888000000-E	SP	40	LF	GENERIC UTILITY ITEM 4" DI FORCE MAIN SEWER PIPE, PC 350
5888000000-E	SP	956	LF	GENERIC UTILITY ITEM 4" PVC FORCE MAIN SEWER PIPE, SDR 21, 200# WP
5888000000-E	SP	65	LF	GENERIC UTILITY ITEM 4" PVC WATER PIPE, SDR 21, 200# WP
5888000000-E	SP	17	LF	GENERIC UTILITY ITEM 6" DI RESTRAINED JOINT WATER PIPE, CLASS 50
5888000000-E	SP	10	LF	GENERIC UTILITY ITEM 6" DI SEWER PIPE, PC 350
5888000000-E	SP	51	LF	GENERIC UTILITY ITEM 6" PVC WATER PIPE, SDR 21, 200# WP
5888000000-E	SP	10	LF	GENERIC UTILITY ITEM 8" DI SEWER PIPE, PC 350

15-DEC-2004 16:37
C:\rdy\r3415\r3415.tsh
rashaw AT

STATE OF NORTH CAROLINA
SUMMARY OF QUANTITIES

PROJECT REFERENCE No.	SHEET No.
R-3415	3

(SHEET 2 OF 2)

ItemNumber	Sec #	Quantity	Unit	Description
5900000000-E	SP	50	TON	GENERIC UTILITY ITEM BEDDING MATERIAL, UTILITIES CLASS IV
5900000000-E	SP	50	TON	GENERIC UTILITY ITEM FOUNDATION CONDITIONING MATERIAL UTILITIES CLASS (VI)
5900000000-E	SP	75	TON	GENERIC UTILITY ITEM PAVEMENT REPAIR FOR UTILITY WORK
5906000000-E	SP	365	LB	GENERIC UTILITY ITEM DUCTILE IRON RESTRAINED JOINT WATER PIPE FITTINGS, 250# MIN WP
5906000000-E	SP	165	LB	GENERIC UTILITY ITEM DUCTILE IRON SEWER PIPE FITTINGS, 250# MIN WP
5906000000-E	SP	2,540	LB	GENERIC UTILITY ITEM DUCTILE IRON WATER PIPE FITTINGS, 250# MIN WP
6000000000-E	1605	12,500	LF	TEMPORARY SILT FENCE
6006000000-E	1610	1,250	TON	STONE FOR EROSION CONTROL, CLASS A
6009000000-E	1610	8,480	TON	STONE FOR EROSION CONTROL, CLASS B
6012000000-E	1610	3,900	TON	SEDIMENT CONTROL STONE
6015000000-E	1615	54.5	ACR	TEMPORARY MULCHING
6018000000-E	1620	1,950	LB	SEED FOR TEMPORARY SEEDING
6021000000-E	1620	7.75	TON	FERTILIZER FOR TEMPORARY SEED-ING
6024000000-E	1622	3,500	LF	TEMPORARY SLOPE DRAINS
6027000000-N	1622	66	EA	INLET PROTECTION AT TEMPORARY SLOPE DRAINS
6029000000-E	SP	2,400	LF	SAFETY FENCE
6030000000-E	1630	30,100	CY	SILT EXCAVATION
6036000000-E	1631	36,500	SY	MATTING FOR EROSION CONTROL
6037000000-E	SP	150	SY	COIR FIBER MAT
6038000000-E	SP	2,600	SY	PERMANENT SOIL REINFORCEMENT MAT
6042000000-E	1632	1,250	LF	1/4" HARDWARE CLOTH

ItemNumber	Sec #	Quantity	Unit	Description
6045000000-E	SP	240	LF	**" TEMPORARY PIPE (18")
6045000000-E	SP	250	LF	**" TEMPORARY PIPE (24")
6070000000-N	SP	12	EA	SPECIAL STILLING BASINS
6071030000-E	SP	1,325	LF	COIR FIBER BAFFLES
6071050000-E	SP	25	EA	**" SKIMMER (2")
6084000000-E	1660	53.5	ACR	SEEDING & MULCHING
6087000000-E	1660	32	ACR	MOWING
6090000000-E	1661	500	LB	SEED FOR REPAIR SEEDING
6093000000-E	1661	1.25	TON	FERTILIZER FOR REPAIR SEEDING
6096000000-E	1662	1,300	LB	SEED FOR SUPPLEMENTAL SEEDING
6108000000-E	1665	40.25	TON	FERTILIZER TOPDRESSING
6111000000-E	SP	525	LF	IMPERVIOUS DIKE
6114000000-N	SP	30	HR	SPECIALIZED HAND MOWING
6117000000-N	SP	36	EA	RESPONSE FOR EROSION CONTROL
6123000000-E	1670	0.3	ACR	REFORESTATION
6126000000-E	SP	1.23	ACR	STREAMBANK REFORESTATION
******* BEGIN SCHEDULE AA ******* ******* (3 ALTERNATES) *******				
0366000000-E AA1	310	3,100	LF	15" RC PIPE CULVERTS, CLASS III
0372000000-E AA1	310	1,240	LF	18" RC PIPE CULVERTS, CLASS III
0378000000-E AA1	310	972	LF	24" RC PIPE CULVERTS, CLASS III
*** OR ***				
0366000000-E AA2	310	2,744	LF	15" RC PIPE CULVERTS, CLASS III
0372000000-E AA2	310	744	LF	18" RC PIPE CULVERTS, CLASS III
0378000000-E AA2	310	432	LF	24" RC PIPE CULVERTS, CLASS III

ItemNumber	Sec #	Quantity	Unit	Description
0536000000-E AA2	SP	356	LF	***" HDPE PIPE CULVERTS (15")
0536000000-E AA2	SP	496	LF	***" HDPE PIPE CULVERTS (18")
0536000000-E AA2	SP	540	LF	***" HDPE PIPE CULVERTS (24")
*** OR ***				
0366000000-E AA3	310	2,744	LF	15" RC PIPE CULVERTS, CLASS III
0372000000-E AA3	310	744	LF	18" RC PIPE CULVERTS, CLASS III
0378000000-E AA3	310	432	LF	24" RC PIPE CULVERTS, CLASS III
0540000000-E AA3	SP	356	LF	***" ALUMINIZED CORRUGATED STEEL PIPE CULVERTS, ****" THICK (15", 0.064")
0540000000-E AA3	SP	496	LF	***" ALUMINIZED CORRUGATED STEEL PIPE CULVERTS, ****" THICK (18", 0.064")
0540000000-E AA3	SP	540	LF	***" ALUMINIZED CORRUGATED STEEL PIPE CULVERTS, ****" THICK (24", 0.064")
******* END SCHEDULE AA *******				

D11CADSRV

COMPUTED BY: RA [signature] DATE: 1/26/05

CHECKED BY: J. L. Laws DATE: 1/26/05

PROJECT NO.	SHEET NO.
R-3415	3-A

STATE OF NORTH CAROLINA
DIVISION OF HIGHWAYS

LIST OF PIPES, ENDWALLS, ETC. (FOR PIPES 48" & UNDER)

STATION	LOCATION (LT, RT, OR CL)	STRUCTURE NO. FROM	STRUCTURE NO. TO	TOP ELEVATION	INVERT ELEVATION	INVERT ELEVATION	SLOPE CRITICAL	CLASS III R.C. PIPE (UNLESS NOTED OTHERWISE) 12"	15"	18"	24"	30"	36"	42"	48"
-Y- 12+59	RT	1		1012.54	1009.54										
-Y- 12+55	CL	2			1009.54	1004.14				48					
-L- 20+00	RT	3				999.54			64						
-L- 20+42	RT	4		1002.54	999.54										
-L- 20+42	RT	5			999.54				12						
-L- 20+43	LT	6				995.30			32						
-L- 22+08	RT	7													
-L- 22+41	RT	8													
-L- 23+91	RT	9		1000.24	997.99										
-L- 23+91	RT	10			997.99					16					
-L- 23+91	LT	11				990.04				24					
-L- 25+95	RT	12													
-L- 27+12	RT	13													
-L- 28+94	LT	14													
-L- 29+24	RT	15													
-L- 30+08	RT	16													
-L- 31+07	RT	17													
-L- 30+95	LT	18		992.24	989.49										
-L- 31+50	LT	19			989.49	975.00									
-L- 31+80	RT	20													
-L- 32+38	RT	21		987.79	985.04										
-L- 32+38	RT	21A			985.04				16						
-L- 32+38	LT	22			972.10				24						
-L- 34+18	RT	23													
-L- 34+95	RT	24		978.98	976.23										
SHEET TOTAL									148	88					

STATION	STRUCTURE NO.	BITUMINOUS COATED C.S. PIPE TYPE B (UNLESS NOTED OTHERWISE) 12" .064	15" .064	18" .064	24" .064	30" .079	36" .079	42" .109	48" .109	CLASS III R.C. PIPE OR C.S. PIPE, TYPE IR ALUMINIZED OR HDPE PIPE, TYPE S OR D 12"	15"	18"	24"	30"	36"	15" SIDE DRAIN PIPE	18" SIDE DRAIN PIPE	24" SIDE DRAIN PIPE	ENDWALLS STD. 838.01, STD. 838.11 OR STD. 838.80 (UNLESS NOTED OTHERWISE) CU. YARDS R.C.P.	C.S.P.
-Y- 12+59	1																			
-Y- 12+55	2																			
-L- 20+00	3																			
-L- 20+42	4																			
-L- 20+42	5																			
-L- 20+43	6																			
-L- 22+08	7															24				
-L- 22+41	8															24				
-L- 23+91	9																			
-L- 23+91	10																			
-L- 23+91	11																			
-L- 25+95	12															24				
-L- 27+12	13															24				
-L- 28+94	14															24				
-L- 29+24	15															44				
-L- 30+08	16															44				
-L- 31+07	17															32				
-L- 30+95	18																			
-L- 31+50	19		108																	
-L- 31+80	20															24				
-L- 32+38	21																			
-L- 32+38	21A																			
-L- 32+38	22																			
-L- 34+18	23															88				
-L- 34+95	24																			
SHEET TOTAL			108													352				

STATION	STRUCTURE NO.	QUANITIES FOR DRAINAGE STRUCTURES PER EACH (0' THRU 5.0')	*TOTAL L.F. FOR PAY QUANTITY SHALL BE COL. 'A' + (1.3 X COL.'B') LIN. FT. A 5.0' THRU 10.0'	B 10.0' AND ABOVE	C.B. STD. 840.01 OR STD. 840.02	FRAME, GRATES, AND HOOD STANDARD 840.03 TYPE OF GRATE E	F	G	D.I. STD. 840.14 OR STD. 840.15	D.I. FRAME AND GRATE STD. 840.16	M.D.I. TYPE "A" STD. 840.17 OR 840.26	M.D.I. TYPE "B" STD. 840.18 OR 840.27	M.D.I. TYPE "D" STD. 840.19 OR 840.28	M.D.I. FRAME WITH GRATE STD. 840.20	M.D.I. (N.S.) FRAME WITH TWO GRATES STD. 840.29	M.D.I. (N.S.) FRAME WITH GRATE STD. 840.24	M.D.I. (N.S.) FRAME WITH TWO GRATES STD. 840.24	J.B. STD. 840.31 OR 840.32	T.B.J.B. STD. 840.34	MANHOLE STD. 840.51	M.H. STD. 840.51 OR 840.53	M.H. FRAME AND COVER STD. 840.54	CORR. STEEL ELBOWS NO. & SIZE	CONC. COLLARS CL. "B" C.Y. STD. 840.72	CONC. & BRICK PIPE PLUG, C.Y. STD. 840.71	PIPE REMOVAL LIN. FT.	REMARKS
-Y- 12+59	1	1										1					1										
-Y- 12+55	2																										REMOVE & REPLACE
-L- 20+00	3																										
-L- 20+42	4	1										1					1										REMOVE EXISTING DI
-L- 20+42	5																							0.399			COLLAR & EXTEND
-L- 20+43	6																							0.399			COLLAR & EXTEND, REMOVE HW
-L- 22+08	7																										
-L- 22+41	8																										
-L- 23+91	9	1										1					1										REMOVE EXISTING DI
-L- 23+91	10																							0.4465			COLLAR & EXTEND, REMOVE HW
-L- 23+91	11																							0.4465			COLLAR & EXTEND, REMOVE HW
-L- 25+95	12																										
-L- 27+12	13																										
-L- 28+94	14																										
-L- 29+24	15																										
-L- 30+08	16																										
-L- 31+07	17																										
-L- 30+95	18	1										1					1									28	REMOVE 12" RCP LT
-L- 31+50	19																						2-15"				
-L- 31+80	20																										
-L- 32+38	21	1										1					1										REMOVE EXISTING DI
-L- 32+38	21A																							0.399			COLLAR & EXTEND
-L- 32+38	22																							0.399			COLLAR & EXTEND, REMOVE HW
-L- 34+18	23																										
-L- 34+95	24	1										1					1										REMOVE EXISTING DI
SHEET TOTAL		6										6					6						2-15"	2.489		28	

ABBREVIATIONS

C.B.	CATCH BASIN
N.D.I.	NARROW DROP INLET
D.I.	DROP INLET
M.D.I.	MEDIAN DROP INLET
M.D.I.(N.S.)	MEDIAN DROP INLET (NARROW SLOT)
J.B.	JUNCTION BOX
M.H.	MANHOLE
T.B.D.I.	TRAFFIC BEARING DROP INLET
T.B.J.B.	TRAFFIC BEARING JUNCTION BOX

D11CADSRV

COMPUTED BY: RAM (signature) DATE: 1/26/05

CHECKED BY: J. L. Laws DATE: 1/26/05

PROJECT NO.	SHEET NO.
R-3415	3-B

STATE OF NORTH CAROLINA
DIVISION OF HIGHWAYS

LIST OF PIPES, ENDWALLS, ETC. (FOR PIPES 48" & UNDER)

ABBREVIATIONS
- C.B. — CATCH BASIN
- N.D.I. — NARROW DROP INLET
- D.I. — DROP INLET
- M.D.I. — MEDIAN DROP INLET
- M.D.I.(N.S.) — MEDIAN DROP INLET (NARROW SLOT)
- J.B. — JUNCTION BOX
- M.H. — MANHOLE
- T.B.D.I. — TRAFFIC BEARING DROP INLET
- T.B.J.B. — TRAFFIC BEARING JUNCTION BOX

Table 1: Station, structure, elevations and CLASS III R.C. PIPE (UNLESS NOTED OTHERWISE)

STATION	LOCATION (LT, RT, OR CL)'	STRUCTURE NO. FROM	STRUCTURE NO. TO	TOP ELEVATION	INVERT ELEVATION	INVERT ELEVATION	SLOPE CRITICAL	12"	15"	18"	24"	30"	36"	42"	48"
-L- 36+40	RT	25			976.23				92						
-L- 39+92	LT	26													
-L- 39+92	LT	27				976.09			12						
-L- 39+96	RT	28				958.70									
-L- 40+08	RT	29			974.50	958.70									
-L- 40+08	RT	30		977.76	974.49										
-L- 40+30	RT	30	31		974.49	974.71			60						
-L- 40+66	RT	31		977.46	974.71										
-L- 42+62	LT	32													
-L- 44+90	LT	33				972.10			16						
-L- 44+90	RT	34			973.28				16						
-L- 46+99	LT	35		972.17	969.42										
-L- 47+25	LT	36				959.70									
-L- 49+28	LT	37													
-L- 49+28	LT	38													
-L- 50+34	LT	39				966.39									
-L- 50+36	LT	40				956.36									
-L- 56+82	LT	41				956.74									
-L- 56+82	RT	42				948.50									
-L- 58+76	RT	43				924.20									
-L- 59+52	RT	44		944.94	942.19										
-L- 59+52	RT	45			942.19	936.74									
-L- 61+73	RT	46				928.90									
-L- 61+83	LT	47				929.50									
-L- 63+06	RT	48													
SHEET TOTALS									196						

SIZE / THICKNESS OR GAUGE

Table 2: BITUMINOUS COATED C.S. PIPE TYPE B (UNLESS NOTED OTHERWISE) and CLASS III R.C. PIPE OR C.S. PIPE, TYPE IR ALUMINIZED OR HDPE PIPE, TYPE S OR D

STRUCTURE NO.	CSP 12" (.064)	CSP 15" (.064)	CSP 18" (.064)	CSP 24" (.064)	CSP 30" (.079)	CSP 36" (.079)	CSP 42" (.109)	CSP 48" (.109)	III/IR/HDPE 12"	III/IR/HDPE 15"	III/IR/HDPE 18"	III/IR/HDPE 24"	III/IR/HDPE 30"	III/IR/HDPE 36"
25														
26														
27														
28		32												
29		36												
30														
30–31														
31														
32														
33														
34														
35														
36		48												
37														
38		72												
39		12												
40		24												
41										4				
42										12				
43			32											
44														
45		16												
46											12			
47											8			
48														
SHEET TOTALS		240	32							16	20			

Table 3: Side drain pipe, endwalls, drainage structures, frames

STRUCTURE NO.	15" SIDE DRAIN PIPE	18" SIDE DRAIN PIPE	24" SIDE DRAIN PIPE	ENDWALLS STD. 838.01, STD. 838.11 OR STD. 838.80 (UNLESS NOTED OTHERWISE) CU. YARDS R.C.P.	ENDWALLS CU. YARDS C.S.P.	QUANITIES FOR DRAINAGE STRUCTURES PER EACH (0' THRU 5.0')	*TOTAL L.F. FOR PAY QUANTITY SHALL BE COL. 'A' + (1.3 X COL.'B') LIN. FT. A 5.0' THRU 10.0'	LIN. FT. B 10.0' AND ABOVE	C.B. STD. 840.01 OR STD. 840.02	FRAME, GRATES, AND HOOD STANDARD 840.03 TYPE OF GRATE E	F	G
25												
26						1						
27												
28												
29												
30						1						
30–31												
31						1						
32	40											
33												
34												
35						1						
36												
37						1						
38												
39												
40												
41												
42												
43												
44						1						
45												
46												
47												
48	24											
SHEET TOTALS	64					6						

Table 4: Standard drainage items, elbows, collars, pipe removal and remarks

STRUCTURE NO.	D.I. STD. 840.14 OR STD. 840.15	D.I. FRAME AND GRATE STD. 840.16	M.D.I. TYPE "A" STD. 840.17 OR 840.26	M.D.I. TYPE "B" STD. 840.18 OR 840.27	M.D.I. TYPE "D" STD. 840.19 OR 840.28	M.D.I. FRAME WITH GRATE STD. 840.20	M.D.I. (N.S.) FRAME WITH TWO GRATES STD. 840.29	M.D.I. (N.S.) FRAME WITH GRATE STD. 840.24	M.D.I. (N.S.) FRAME WITH TWO GRATES STD. 840.24	J.B. STD. 840.31 OR 840.32	T.B.J.B. STD. 840.34	MANHOLE STD. 840.51	M.H. STD. 840.51 OR 840.53	M.H. FRAME AND COVER STD. 840.54	CORR. STEEL ELBOWS NO. & SIZE	CONC. COLLARS CL. "B" C.Y. STD. 840.72	CONC. & BRICK PIPE PLUG, C.Y. STD. 840.71	PIPE REMOVAL LIN. FT.	REMARKS
25																		48	REMOVE 12" RCP
26											1								SLAB LID
27																		28	REMOVE 15" CSP
28															2-15"	0.399			COLLAR & EXTEND, REMOVE HW
29															2-15"				
30				1			1												
30–31																			
31				1			1												
32																			
33																0.399			COLLAR & EXTEND, REMOVE HW
34																0.399			COLLAR & EXTEND, REMOVE HW
35				1					1										
36															2-15"				
37				1			1												
38															2-15"				
39																0.399			COLLAR & EXTEND, REMOVE HW
40																0.399			COLLAR & EXTEND, REMOVE HW
41																0.399			COLLAR & EXTEND, REMOVE HW
42																0.399			COLLAR & EXTEND, REMOVE HW
43															2-18"	0.4465			COLLAR & EXTEND, REMOVE HW
44				1			1												
45															2-15"	0.399			COLLAR & EXTEND
46																0.4465			COLLAR & EXTEND, REMOVE HW
47																0.4465			COLLAR & EXTEND, REMOVE HW
48																			
SHEET TOTALS				5			4		1		1				10-15", 2-18"	4.5315		76	

D11CADSRV 1/14/2005 C:\rdy\r-3415\Drainage_summaries.xls

D11CADSRV

COMPUTED BY: RA [signature] DATE: 1/24/05

CHECKED BY: J. L. Laws DATE: 1/26/05

PROJECT NO.	SHEET NO.
R-3415	3-C

STATE OF NORTH CAROLINA
DIVISION OF HIGHWAYS

LIST OF PIPES, ENDWALLS, ETC. (FOR PIPES 48" & UNDER)

STATION	LOCATION (LT, RT, OR CL)	STRUCTURE NO. FROM	STRUCTURE NO. TO	TOP ELEVATION	INVERT ELEVATION	INVERT ELEVATION	SLOPE CRITICAL	CLASS III R.C. PIPE (UNLESS NOTED OTHERWISE) 12"	15"	18"	24"	30"	36"	42"	48"	BITUMINOUS COATED C.S. PIPE TYPE B (UNLESS NOTED OTHERWISE) 12" .064	15" .064	18" .064	24" .064	30" .079	36" .079	42" .109	48" .109
-L- 64+53	RT	49																					
-L- 65+87	RT	50				921.80																	
-L- 65+83	LT	51				923.77																	
-L- 69+20	CL	52			899.95	898.20				60													
-L- 71+88	CL	53			891.70	890.40				60													
-L- 72+09	RT	54																					
-L- 73+36	LT	55																					
-L- 74+54	LT	56																					
-L- 74+54	LT	57																					
-L- 77+50	RT	58		895.01	892.26																		
-L- 77+50	RT	59															24						
-L- 78+80	LT	60		894.99	892.24																		
-L- 78+80	LT	61															32						
-L- 82+10	RT	62		894.93	891.93																		
-L- 82+10	CL	62	64		891.93	891.53				40													
-L- 82+10	LT	64		894.93	891.53																		
-L- 82+10	LT	65															48						
-L- 83+84	RT	66																72					
-L- 84+38	LT	67																					
-L- 89+62	RT	68																					
-L- 92+81	CL	69			924.30	920.00					64												
-L- 93+70	LT	70																					
-L- 94+00	LT	70A																					
-L- 95+70	RT	71																					
-L- 97+54	CL	72			945.80	944.53				56													
-L- 97+54	RT	73																					
SHEET TOTALS										216	64						104	72					

STATION	CLASS III R.C. PIPE OR C.S. PIPE, TYPE IR ALUMINIZED OR HDPE PIPE, TYPE S OR D 12"	15"	18"	24"	30"	36"	15" SIDE DRAIN PIPE	18" SIDE DRAIN PIPE	24" SIDE DRAIN PIPE	ENDWALLS STD. 838.01, STD. 838.11 OR STD. 838.80 (UNLESS NOTED OTHERWISE) CU. YARDS R.C.P.	C.S.P.	QUANITIES FOR DRAINAGE STRUCTURES PER EACH (0' THRU 5.0')	*TOTAL L.F. FOR PAY QUANTITY SHALL BE COL. 'A' + (1.3 X COL.'B') LIN. FT. A 5.0' THRU 10.0'	B 10.0' AND ABOVE	C.B. STD. 840.01 OR STD. 840.02	FRAME, GRATES, AND HOOD STANDARD 840.03 TYPE OF GRATE E	F	G	D.I. STD. 840.14 OR STD. 840.15	D.I. FRAME AND GRATE STD. 840.16	M.D.I. TYPE "A" STD. 840.17 OR 840.26	M.D.I. TYPE "B" STD. 840.18 OR 840.27	M.D.I. TYPE "D" STD. 840.19 OR 840.28	M.D.I. FRAME WITH GRATE STD. 840.20	M.D.I. (N.S.) FRAME WITH TWO GRATES STD. 840.29	M.D.I. (N.S.) FRAME WITH GRATE STD. 840.24	M.D.I. (N.S.) FRAME WITH TWO GRATES STD. 840.24	J.B. STD. 840.31 OR 840.32	T.B.J.B. STD. 840.34	MANHOLE STD. 840.51	M.H. STD. 840.51 OR 840.53	M.H. FRAME AND COVER STD. 840.54	CORR. STEEL ELBOWS NO. & SIZE	CONC. COLLARS CL. "B" C.Y. STD. 840.72	CONC. & BRICK PIPE PLUG, C.Y. STD. 840.71	PIPE REMOVAL LIN. FT.	REMARKS
-L- 64+53							24																													36	REMOVE 15" RCP
-L- 65+87			12																																0.4465			COLLAR & EXTEND, REMOVE HW
-L- 65+83			8																																0.4465			COLLAR & EXTEND, REMOVE HW
-L- 69+20																																						REMOVE & REPLACE 18" CSP, HW
-L- 71+88																																						REMOVE & REPLACE 15" CSP, HW
-L- 72+09								24																													28	REMOVE 18" RCP
-L- 73+36							24																														24	REMOVE 18" RCP
-L- 74+54							24																														20	REMOVE 18" RCP
-L- 74+54									32																												44	REMOVE 24" CSP
-L- 77+50												1										1				1												
-L- 77+50																																		2-15"				
-L- 78+80												1										1				1												
-L- 78+80																																		2-15"				
-L- 82+10												1										1				1												
-L- 82+10																																						
-L- 82+10												1										1				1												
-L- 82+10																																		2-15"				
-L- 83+84																																					42	REMOVE 18" PLASTIC
-L- 84+38								24																													36	REMOVE 18" RCP
-L- 89+62							48																														46	REMOVE 15" CSP
-L- 92+81																																						REMOVE 18" RCP
-L- 93+70							24																														25	REMOVE 15" RCP
-L- 94+00							32																															
-L- 95+70								208																													204	REMOVE 18" RCP
-L- 97+54																																						REMOVE & REPLACE 15" CSP
-L- 97+54								72																													70	REMOVE 18" RCP
SHEET TOTALS			20				176	328	32			4										4				4								6-15"	0.893		575	

ABBREVIATIONS

- C.B. CATCH BASIN
- N.D.I. NARROW DROP INLET
- D.I. DROP INLET
- M.D.I. MEDIAN DROP INLET
- M.D.I.(N.S.) MEDIAN DROP INLET (NARROW SLOT)
- J.B. JUNCTION BOX
- M.H. MANHOLE
- T.B.D.I. TRAFFIC BEARING DROP INLET
- T.B.J.B. TRAFFIC BEARING JUNCTION BOX

D11CADSRV

COMPUTED BY: N A [signature] DATE: 1/26/05

CHECKED BY: J. L. Laws DATE: 1/26/05

PROJECT NO.	SHEET NO.
R-3415	3-D

STATE OF NORTH CAROLINA
DIVISION OF HIGHWAYS

LIST OF PIPES, ENDWALLS, ETC. (FOR PIPES 48" & UNDER)

STATION	LOCATION (LT, RT, OR CL)'	STRUCTURE NO. FROM	STRUCTURE NO. TO	TOP ELEVATION	INVERT ELEVATION	INVERT ELEVATION	SLOPE CRITICAL	CLASS III R.C. PIPE (UNLESS NOTED OTHERWISE) 12"	15"	18"	24"	30"	36"	42"	48"
-L- 100+08	RT	74							36						
-L- 100+30	RT	75		958.08	955.33										
-L- 100+31	RT	76			955.33				12						
-L- 100+37	LT	77				957.81			12						
-L- 102+08	RT	78		964.07	960.90										
-L- 101+15	RT	78	75		960.09	955.33			176						
-L- 105+03	LT	79													
-L- 106+48	LT	80			946.18				64						
-L- 106+80	LT	81		949.18	946.18										
-L- 106+80	LT	82			946.18					8					
-L- 106+77	RT	83				942.50				16					
-L- 108+86	RT	84													
-L- 109+84	RT	85													
-L- 110+83	RT	86		922.40	919.23										
-L- 111+32	RT	86	87		919.23	914.20			96						
-L- 111+81	RT	87		916.45	914.20										
-L- 111+90	CL	88			914.20	913.16			56						
-L- 114+00	RT	89													
-L- 115+34	LT	90													
-L- 115+75	RT	91													
-L- 116+65	RT	92													
-L- 119+84	RT	93		892.59	889.84										
-L- 119+84	LT	94		892.59	889.84										
-L- 119+84	LT	95			889.84										
-L- 119+84	RT	96			889.94										
SHEET TOTALS									452	24					

STATION	BITUMINOUS COATED C.S. PIPE TYPE B (UNLESS NOTED OTHERWISE) 12" .064	15" .064	18" .064	24" .064	30" .079	36" .079	42" .109	48" .109	CLASS III R.C. PIPE OR C.S. PIPE, TYPE IR ALUMINIZED OR HDPE PIPE, TYPE S OR D 12"	15"	18"	24"	30"	36"	15" SIDE DRAIN PIPE	18" SIDE DRAIN PIPE	24" SIDE DRAIN PIPE	ENDWALLS STD. 838.01, STD. 838.11 OR STD. 838.80 (UNLESS NOTED OTHERWISE) CU. YARDS R.C.P.	C.S.P.
-L- 100+08																			
-L- 100+30																			
-L- 100+31																			
-L- 100+37																			
-L- 102+08																			
-L- 101+15																			
-L- 105+03															32				
-L- 106+48																			
-L- 106+80																			
-L- 106+80																			
-L- 106+77																			
-L- 108+86															24				
-L- 109+84															24				
-L- 110+83																			
-L- 111+32																			
-L- 111+81																			
-L- 111+90																			
-L- 114+00															24				
-L- 115+34																36			
-L- 115+75															24				
-L- 116+65															24				
-L- 119+84																			
-L- 119+84																			
-L- 119+84		16																	
-L- 119+84		16																	
SHEET TOTALS		32													152	36			

STATION	QUANITIES FOR DRAINAGE STRUCTURES PER EACH (0' THRU 5.0')	*TOTAL L.F. FOR PAY QUANTITY SHALL BE COL. 'A' + (1.3 X COL.'B') LIN. FT. A 5.0' THRU 10.0'	B 10.0' AND ABOVE	C.B. STD. 840.01 OR STD. 840.02	FRAME, GRATES, AND HOOD STANDARD 840.03 TYPE OF GRATE E	F	G	D.I. STD. 840.14 OR STD. 840.15	D.I. FRAME AND GRATE STD. 840.16	M.D.I. TYPE "A" STD. 840.17 OR 840.26	M.D.I. TYPE "B" STD. 840.18 OR 840.27	M.D.I. TYPE "D" STD. 840.19 OR 840.28	M.D.I. FRAME WITH GRATE STD. 840.20	M.D.I. (N.S.) FRAME WITH TWO GRATES STD. 840.29	M.D.I. (N.S.) FRAME WITH GRATE STD. 840.24	M.D.I. (N.S.) FRAME WITH TWO GRATES STD. 840.24	J.B. STD. 840.31 OR 840.32	T.B.J.B. STD. 840.34	MANHOLE STD. 840.51	M.H. STD. 840.51 OR 840.53	M.H. FRAME AND COVER STD. 840.54
-L- 100+08																					
-L- 100+30	1										1					1					
-L- 100+31																					
-L- 100+37																					
-L- 102+08	1							1	1												
-L- 101+15																					
-L- 105+03																					
-L- 106+48																					
-L- 106+80	1										1					1					
-L- 106+80																					
-L- 106+77																					
-L- 108+86																					
-L- 109+84																					
-L- 110+83	1							1	1												
-L- 111+32																					
-L- 111+81	1							1	1												
-L- 111+90																					
-L- 114+00																					
-L- 115+34																					
-L- 115+75																					
-L- 116+65																					
-L- 119+84	1										1			1							
-L- 119+84	1										1			1							
-L- 119+84																					
-L- 119+84																					
SHEET TOTALS	7							3	3		4			2		2					

STATION	CORR. STEEL ELBOWS NO. & SIZE	CONC. COLLARS CL. "B" C.Y. STD. 840.72	CONC. & BRICK PIPE PLUG, C.Y. STD. 840.71	PIPE REMOVAL LIN. FT.	REMARKS
-L- 100+08				42	REMOVE 15" RCP
-L- 100+30					REMOVE DI
-L- 100+31		0.399			COLLAR & EXTEND
-L- 100+37		0.399			COLLAR & EXTEND, REMOVE HW
-L- 102+08					
-L- 101+15					
-L- 105+03				108	REMOVE 12" CSP
-L- 106+48					REMOVE DI
-L- 106+80					REMOVE DI
-L- 106+80		0.4465			COLLAR & EXTEND
-L- 106+77		0.4465			COLLAR & EXTEND, REMOVE HW
-L- 108+86					
-L- 109+84					
-L- 110+83					REMOVE DI
-L- 111+32				96	REMOVE 12" RCP
-L- 111+81					REMOVE DI
-L- 111+90				40	REMOVE 15" CSP
-L- 114+00				20	REMOVE 12" RCP
-L- 115+34				34	REMOVE 18" CSP
-L- 115+75				13	REMOVE 12" RCP
-L- 116+65				20	REMOVE 12" RCP
-L- 119+84					
-L- 119+84					
-L- 119+84	2-15"				
-L- 119+84	2-15"				
SHEET TOTALS	4-15"	1.691		373	

ABBREVIATIONS

C.B.	CATCH BASIN
N.D.I.	NARROW DROP INLET
D.I.	DROP INLET
M.D.I.	MEDIAN DROP INLET
M.D.I.(N.S.)	MEDIAN DROP INLET (NARROW SLOT)
J.B.	JUNCTION BOX
M.H.	MANHOLE
T.B.D.I.	TRAFFIC BEARING DROP INLET
T.B.J.B.	TRAFFIC BEARING JUNCTION BOX

D11CADSRV,1/14/2005,C:\rdy\r-3415\Drainage_summaries.xls

D11CADSRV

COMPUTED BY: NA [signature] DATE: 1/24/05

CHECKED BY: J. L. Laws DATE: 1/24/05

PROJECT NO.	SHEET NO.
R-3415	3-E

STATE OF NORTH CAROLINA
DIVISION OF HIGHWAYS

LIST OF PIPES, ENDWALLS, ETC. (FOR PIPES 48" & UNDER)

STATION	LOCATION (LT, RT, OR CL)'	STRUCTURE NO. FROM	STRUCTURE NO. TO	TOP ELEVATION	INVERT ELEVATION	INVERT ELEVATION	SLOPE CRITICAL	CLASS III R.C. PIPE (UNLESS NOTED OTHERWISE) 12"	15"	18"	24"	30"	36"	42"	48"	BITUMINOUS COATED C.S. PIPE TYPE B (UNLESS NOTED OTHERWISE) 12" .064	15" .064	18" .064	24" .064	30" .079	36" .079	42" .109	48" .109	CLASS III R.C. PIPE OR C.S. PIPE, TYPE IR ALUMINIZED OR HDPE PIPE, TYPE S OR D 12"	15"	18"	24"	30"	36"
-L- 124+16	LT	97		892.59	889.84																								
-L- 124+16	LT	98			889.84												16												
-L- 126+28	CL	99			889.33	887.40							64																
-L- 126+66	LT	100									56																		
-L- 129+17	LT	101																											
-L- 130+47	RT	102				894.55				16																			
-L- 130+56	LT	103			897.06					12																			
-L- 130+85	LT	104																											
-L- 134+40	LT	105																											
-L- 135+14	CL	106			898.82	895.73							56																
-D5- 10+25	LT	106A																											
-D5- 11+15	LT	106B																											
-L- 139+77	LT	107																											
-L- 140+42	RT	108		900.31	897.56																								
-L- 140+42	RT	109			897.56												12												
-L- 140+42	LT	110		900.31	897.56																								
-L- 140+42	LT	111			897.56												12												
-L- 142+15	RT	112			894.63						76																		
-L- 142+55	RT	113		899.13	894.63																								
-L- 143+66	RT	113	114		894.63	896.91																					216		
-L- 144+75	RT	114		901.41	896.91																								
-L- 145+88	RT	114	115		896.91	899.70																					220		
-L- 147+00	RT	115		904.20	899.70																								
-L- 147+00	RT	116			937.00	899.70											68												
-L- 148+50	RT	115	117		899.70	904.20																				296			
SHEET TOTALS										28	132		120				108									296	436		

STATION	STRUCTURE NO.	15" SIDE DRAIN PIPE	18" SIDE DRAIN PIPE	24" SIDE DRAIN PIPE	ENDWALLS STD. 838.01, STD. 838.11 OR STD. 838.80 (UNLESS NOTED OTHERWISE) CU. YARDS R.C.P.	C.S.P.	QUANTITIES FOR DRAINAGE STRUCTURES PER EACH (0' THRU 5.0')	*TOTAL L.F. FOR PAY QUANTITY SHALL BE COL. 'A' + (1.3 X COL.'B') LIN. FT. A 5.0' THRU 10.0'	B 10.0' AND ABOVE	C.B. STD. 840.01 OR STD. 840.02	FRAME, GRATES, AND HOOD STANDARD 840.03 TYPE OF GRATE E	F	G	D.I. STD. 840.14 OR STD. 840.15	D.I. FRAME AND GRATE STD. 840.16	M.D.I. TYPE "A" STD. 840.17 OR 840.26	M.D.I. TYPE "B" STD. 840.18 OR 840.27	M.D.I. TYPE "D" STD. 840.19 OR 840.28	M.D.I. FRAME WITH GRATE STD. 840.20	M.D.I. (N.S.) FRAME WITH TWO GRATES STD. 840.29	M.D.I. (N.S.) FRAME WITH GRATE STD. 840.24	M.D.I. (N.S.) FRAME WITH TWO GRATES STD. 840.24	J.B. STD. 840.31 OR 840.32	T.B.J.B. STD. 840.34	MANHOLE STD. 840.51	M.H. STD. 840.51 OR 840.53	M.H. FRAME AND COVER STD. 840.54	BERM DRAINAGE OUTLET STD. 850.10	CORR. STEEL ELBOWS NO. & SIZE	CONC. COLLARS CL. "B" C.Y. STD. 840.72	CONC. & BRICK PIPE PLUG, C.Y. STD. 840.71	PIPE REMOVAL LIN. FT.	REMARKS
-L- 124+16	97						1										1			1													
-L- 124+16	98																												2-15"				
-L- 126+28	99				3.4																												REMOVE & REPLACE 18" RCP, 2-HW
-L- 126+66	100																															43	REMOVE 15" CSP
-L- 129+17	101	24																														22	REMOVE 12" RCP
-L- 130+47	102																													0.4465			COLLAR & EXTEND
-L- 130+56	103																													0.4465			COLLAR & EXTEND, REMOVE HW
-L- 130+85	104	24																															
-L- 134+40	105	24																															
-L- 135+14	106				3.4																												REMOVE & REPLACE 18" RCP, 2-HW
-D5- 10+25	106A	30																															
-D5- 11+15	106B	50																															
-L- 139+77	107	28																														24	REMOVE 12" RCP
-L- 140+42	108						1										1			1													
-L- 140+42	109																												2-15"				
-L- 140+42	110						1										1			1													
-L- 140+42	111																												2-15"				
-L- 142+15	112																															60	REMOVE 15" CSP
-L- 142+55	113						1										1					1											
-L- 143+66	113-114																																
-L- 144+75	114						1										1					1											
-L- 145+88	114-115																																
-L- 147+00	115						1										1					1											
-L- 147+00	116																											1	2-15"				
-L- 148+50	115-117																																
SHEET TOTALS		180			6.8		6										6			3		3						1	8-15"	0.893		149	

ABBREVIATIONS

C.B.	CATCH BASIN
N.D.I.	NARROW DROP INLET
D.I.	DROP INLET
M.D.I.	MEDIAN DROP INLET
M.D.I.(N.S.)	MEDIAN DROP INLET (NARROW SLOT)
J.B.	JUNCTION BOX
M.H.	MANHOLE
T.B.D.I.	TRAFFIC BEARING DROP INLET
T.B.J.B.	TRAFFIC BEARING JUNCTION BOX

D11CADSRV

COMPUTED BY: N A S DATE: 1/26/05

CHECKED BY: J. L. Laws DATE: 1/26/05

PROJECT NO.	SHEET NO.
R-3415	3-F

STATE OF NORTH CAROLINA
DIVISION OF HIGHWAYS

LIST OF PIPES, ENDWALLS, ETC. (FOR PIPES 48" & UNDER)

STATION	LOCATION (LT, RT, OR CL)'	STRUCTURE NO. FROM	STRUCTURE NO. TO	TOP ELEVATION	INVERT ELEVATION	INVERT ELEVATION	SLOPE CRITICAL	CLASS III R.C. PIPE (UNLESS NOTED OTHERWISE) ** 12" PLASTIC PIPE 12" HDPE** PLASTIC	15"	18"	24"	30"	36"	42"	48"	BITUMINOUS COATED C.S. PIPE TYPE B (UNLESS NOTED OTHERWISE) * TRENCHLESS CONST. SMOOTH STEEL 12" .064	15" .064	18" .064	24" .064	30" .079 * smooth steel	36" .079	42" .109	48" .109	CLASS III R.C. PIPE OR C.S. PIPE, TYPE IR ALUMINIZED OR HDPE PIPE, TYPE S OR D 12"	15"	18"	24"	30"	36"	15" SIDE DRAIN PIPE	18" SIDE DRAIN PIPE	24" SIDE DRAIN PIPE	ENDWALLS STD. 838.01, STD. 838.11 OR STD. 838.80 (UNLESS NOTED OTHERWISE) CU. YARDS R.C.P.	C.S.P.	QUANITIES FOR DRAINAGE STRUCTURES PER EACH (0' THRU 5.0')	*TOTAL L.F. FOR PAY QUANTITY SHALL BE COL. 'A' + (1.3 X COL.'B') LIN. FT. A 5.0' THRU 10.0'	B 10.0' AND ABOVE	C.B. STD. 840.01 OR STD. 840.02	FRAME, GRATES, AND HOOD STANDARD 840.03 TYPE OF GRATE E	F	G	D.I. STD. 840.14 OR STD. 840.15	D.I. FRAME AND GRATE STD. 840.16	M.D.I. TYPE "A" STD. 840.17 OR 840.26	M.D.I. TYPE "B" STD. 840.18 OR 840.27	M.D.I. TYPE "D" STD. 840.19 OR 840.28	M.D.I. FRAME WITH GRATE STD. 840.20	M.D.I. (N.S.) FRAME WITH TWO GRATES STD. 840.29	M.D.I. (N.S.) FRAME WITH GRATE STD. 840.24	M.D.I. (N.S.) FRAME WITH TWO GRATES STD. 840.24	J.B. STD. 840.31 OR 840.32	T.B.J.B. STD. 840.34	MANHOLE STD. 840.51	M.H. STD. 840.51 OR 840.53	M.H. FRAME AND COVER STD. 840.54	BERM DRAINAGE OUTLET STD. 850.10	30" WELDED STEEL PIPE,	CORR. STEEL ELBOWS NO. & SIZE	CONC. COLLARS CL. "B" C.Y. STD. 840.72	CONC. & BRICK PIPE PLUG, C.Y. STD. 840.71	PIPE REMOVAL LIN. FT.	REMARKS
-L- 150+00	RT	117		908.20	904.20																														1										1					1												REMOVE DI
-L- 150+00	RT	118			925.50	904.20											40																																							1		2-15"			33	REMOVE 18" CSP
-L- 151+50	LT	119		912.52	909.77																														1										1			1														
-L- 151+50	LT	120			909.77												20																																									2-15"				
-L- 153+00	RT	121		917.62	914.87																														1										1			1														
-L- 153+00	RT	122			914.87												20																																									2-15"				
-L- 153+20	RT	123																																	1							1	1																			RETAIN & ADJUST 12" PLASTIC
-L- 153+37	RT	124						30																																																					30	REMOVE 12" PLASTIC
-L- 155+51	RT	128																												28																															30	REMOVE 12" RCP
-L- 156+69	RT	129																												28																															110	REMOVE 12" RCP
-Y3- 12+79	CL	130			906.80	906.40							48																				3.4																												20	REMOVE 24" RCP
-Y3- 15+13	RT	131			921.14	914.00												40																																								2-18"				
-Y3- 15+31	RT	132		929.99	921.39																														1	3.6															1				1							RETAIN & EXTEND
-Y3- 15+38	LT	133								8																																																	0.4465			COLLAR & EXTEND
-L- 158+43	LT	134																													28																															
-L- 158+79	CL	135			957.25	956.80				64																																																			38	REMOVE 18" CSP
-L- 158+92	RT	136		960.25	957.25																														1										1					1												REMOVE HW
-L- 159+27	RT	136	137		957.25	960.25																				64																																			56	REMOVE 18" RCP
-L- 159+57	RT	137		965.15	962.15																														1										1					1												REMOVE DI
-L- 161+06	CL	138			973.00	957.20																																																			100					BORE & JACK
-L- 161+15	RT	139		978.00	973.00																														1										1					1											56	REMOVE 24" CSP, REMOVE DI
-L- 161+92	RT	140			973.00	986.60					140																																																		50	REMOVE 18" CSP
-L- 168+98	LT	141																												24																																
-L- 169+47	LT	142		1003.00	1000.25																														1										1					1												
-L- 169+75	LT	143			1000.25	987.40											60																																									2-15"				
SHEET TOTALS								30		72	140		48				140	40								64				80	28		3.4		9	3.6						1	1		7			2		5	1				1	1	100	8-15", 2-18"	0.4465		423	

ABBREVIATIONS

C.B.	CATCH BASIN
N.D.I.	NARROW DROP INLET
D.I.	DROP INLET
M.D.I.	MEDIAN DROP INLET
M.D.I.(N.S.)	MEDIAN DROP INLET (NARROW SLOT)
J.B.	JUNCTION BOX
M.H.	MANHOLE
T.B.D.I.	TRAFFIC BEARING DROP INLET
T.B.J.B.	TRAFFIC BEARING JUNCTION BOX

D11CADSRV,1/14/2005,C:\rdy\r-3415\Drainage_summaries.xls

D11CADSRV

COMPUTED BY: NA [signature] DATE: 1/26/05

CHECKED BY: J. L. Laws DATE: 1/26/05

PROJECT NO.	SHEET NO.
R-3415	3-G

STATE OF NORTH CAROLINA
DIVISION OF HIGHWAYS

LIST OF PIPES, ENDWALLS, ETC. (FOR PIPES 48" & UNDER)

ABBREVIATIONS

- C.B. CATCH BASIN
- N.D.I. NARROW DROP INLET
- D.I. DROP INLET
- M.D.I. MEDIAN DROP INLET
- M.D.I.(N.S.) MEDIAN DROP INLET (NARROW SLOT)
- J.B. JUNCTION BOX
- M.H. MANHOLE
- T.B.D.I. TRAFFIC BEARING DROP INLET
- T.B.J.B. TRAFFIC BEARING JUNCTION BOX

STATION	LOCATION (LT, RT, OR CL)	STRUCTURE NO. FROM	STRUCTURE NO. TO	TOP ELEVATION	INVERT ELEVATION	INVERT ELEVATION	SLOPE CRITICAL	CLASS III R.C. PIPE (UNLESS NOTED OTHERWISE) 12"	15"	18"	24"	30"	36"	42"	48"	BITUMINOUS COATED C.S. PIPE TYPE B (UNLESS NOTED OTHERWISE) * TRENCHLESS CONST. SMOOTH STEEL 12" .064	15" .064	18" .064	24" .064	24" * smooth steel	30" .079	30"	36" .079	36"	42" .109	42"	48" .109	48"	CLASS III R.C. PIPE OR C.S. PIPE, TYPE IR ALUMINIZED OR HDPE PIPE, TYPE S OR D 12"	15"	18"	24"	30"	36"
-L- 171+21	RT	144		1001.66	998.75																													
-L- 171+30	RT	144	145		998.75	998.83			16																									
-L- 171+41	RT	145		1001.58	998.83																													
-L- 171+21	RT	146			998.75												44																	
-L- 171+39	LT	147		1001.58	998.89																													
-L- 171+49	LT	147	148		998.89	998.75			16																									
-L- 171+59	LT	148		1001.66	998.75																													
-L- 171+59	LT	149			998.75												48																	
-L- 175+33	RT	150																																
-L- 183+08	LT	151				1051.18																									12			
-L- 183+08	RT	152				1053.48																									20			
-L- 189+41	LT	153		1062.00	1051.03																													
-L- 189+41	LT	154			1051.03	1050.00																										16		
-L- 189+73	RT	155				1060.45																										20		
-L- 192+90	RT	156				1071.27																									16			
-L- 192+90	LT	157				1069.53																									16			
-L- 199+70	CL	158			1060.92	1058.40																												
-L- 201+00	RT	159		1064.51	1061.51																													
-L- 201+45	RT	159	160		1061.51	1058.89				84																								
-L- 201+89	RT	160		1061.89	1058.89																													
-L- 201+97	CL	161			1058.89	1058.40				80																								
-L- 208+20	CL	162			1022.70	1008.50																												
-L- 210+55	CL	163			999.90	990.40																												
-L- 210+55	LT	164			999.90																													
-L- 213+06	LT	165				982.40																										12		
SHEET TOTALS									32	164							92														64	48		

STATION	STRUCTURE NO.	15" SIDE DRAIN PIPE	18" SIDE DRAIN PIPE	24" SIDE DRAIN PIPE	ENDWALLS STD. 838.01, STD. 838.11 OR STD. 838.80 (UNLESS NOTED OTHERWISE) CU. YARDS R.C.P.	C.S.P.	QUANITIES FOR DRAINAGE STRUCTURES PER EACH (0' THRU 5.0')	*TOTAL L.F. FOR PAY QUANTITY SHALL BE COL. 'A' + (1.3 X COL.'B') LIN. FT. A 5.0' THRU 10.0'	B 10.0' AND ABOVE	C.B. STD. 840.01 OR STD. 840.02	FRAME, GRATES, AND HOOD STANDARD 840.03 TYPE OF GRATE E	F	G	D.I. STD. 840.14 OR STD. 840.15	D.I. FRAME AND GRATE STD. 840.16	M.D.I. TYPE "A" STD. 840.17 OR 840.26	M.D.I. TYPE "B" STD. 840.18 OR 840.27	M.D.I. TYPE "D" STD. 840.19 OR 840.28	M.D.I. FRAME WITH GRATE STD. 840.20	M.D.I. (N.S.) FRAME WITH TWO GRATES STD. 840.29	M.D.I. (N.S.) FRAME WITH GRATE STD. 840.24	M.D.I. (N.S.) FRAME WITH TWO GRATES STD. 840.24	J.B. STD. 840.31 OR 840.32	T.B.J.B. STD. 840.34	MANHOLE STD. 840.51	M.H. STD. 840.51 OR 840.53	M.H. FRAME AND COVER STD. 840.54
-L- 171+21	144						1										1			1							
-L- 171+30	144-145																										
-L- 171+41	145						1										1			1							
-L- 171+21	146																										
-L- 171+39	147						1										1			1							
-L- 171+49	147-148																										
-L- 171+59	148						1										1			1							
-L- 171+59	149																										
-L- 175+33	150	24																									
-L- 183+08	151																										
-L- 183+08	152																										
-L- 189+41	153						1	5	0.97														1				1
-L- 189+41	154																										
-L- 189+73	155																										
-L- 192+90	156																										
-L- 192+90	157																										
-L- 199+70	158																										
-L- 201+00	159						1										1			1							
-L- 201+45	159-160																										
-L- 201+89	160						1										1					1					
-L- 201+97	161																										
-L- 208+20	162																										
-L- 210+55	163																										
-L- 210+55	164						1										1					1					
-L- 213+06	165																										
SHEET TOTALS		24					8	5	0.97								7			5		2	1				1

STATION	STRUCTURE NO.	18" WELDED STEEL PIPE, 0.375" THICK, GRADE B,	24" WELDED STEEL PIPE,	CORR. STEEL ELBOWS NO. & SIZE	CONC. COLLARS CL. "B" C.Y. STD. 840.72	CONC. & BRICK PIPE PLUG, C.Y. STD. 840.71	PIPE REMOVAL LIN. FT.	REMARKS
-L- 171+21	144							
-L- 171+30	144-145							
-L- 171+41	145							
-L- 171+21	146			2-15"				
-L- 171+39	147							
-L- 171+49	147-148							
-L- 171+59	148							
-L- 171+59	149			2-15"				
-L- 175+33	150						36	REMOVE 18" CSP
							38	-L- STA. 177+60 REMOVE 18" CSP
-L- 183+08	151				0.399			COLLAR & EXTEND
-L- 183+08	152				0.399			COLLAR & EXTEND, REMOVE HW
-L- 189+41	153							JB /W MH & EXTEND
-L- 189+41	154						20	REMOVE 18" RCP, REMOVE HW
-L- 189+73	155				0.4465			COLLAR & EXTEND, REMOVE HW
-L- 192+90	156				0.399			COLLAR & EXTEND, REMOVE HW
-L- 192+90	157				0.399			COLLAR & EXTEND, REMOVE HW
-L- 199+70	158		96			0.130		BORE & JACK, PLUG 18" CSP
-L- 201+00	159							REMOVE DI
-L- 201+45	159-160					0.130	60	REMOVE 15" CSP, PLUG 18"
-L- 201+89	160							REMOVE DI
-L- 201+97	161							
							38	-L- STA. 206+40 REMOVE 15" CSP
-L- 208+20	162	76					38	BORE & JACK, REMOVE 15" CSP
-L- 210+55	163	72				0.130		BORE & JACK, REMOVE HW & PLUG
-L- 210+55	164							
-L- 213+06	165				0.4465			COLLAR & EXTEND, REMOVE HW
SHEET TOTALS		148	96	4-15"	2.489	0.390	230	

D11CADSRV

COMPUTED BY: RA [signature] DATE: 1/26/05

CHECKED BY: J. L. Laws DATE: 1/26/05

PROJECT NO.	SHEET NO.
R-3415	3-H

STATE OF NORTH CAROLINA
DIVISION OF HIGHWAYS

LIST OF PIPES, ENDWALLS, ETC. (FOR PIPES 48" & UNDER)

STATION	LOCATION (LT, RT, OR CL)	STRUCTURE NO. FROM	STRUCTURE NO. TO	TOP ELEVATION	INVERT ELEVATION	INVERT ELEVATION	SLOPE CRITICAL	CLASS III R.C. PIPE (UNLESS NOTED OTHERWISE) 12"	15"	18"	24"	30"	36"	42"	48"	BITUMINOUS COATED C.S. PIPE TYPE B (UNLESS NOTED OTHERWISE) 12" .064	15" .064	18" .064	24" .064	30" .079	36" .079	42" .109	48" .109	CLASS III R.C. PIPE OR C.S. PIPE, TYPE IR ALUMINIZED OR HDPE PIPE, TYPE S OR D 12"	15"	18"	24"	30"	36"
-L- 213+06	RT	166				975.61																				20			
-L- 213+52	RT	167		982.51	979.79																								
-L- 213+52	RT	168			979.79	973.50											20												
-L- 217+41	CL	169			968.30	967.00							60																
-L- 220+07	LT	170																											
-L- 222+80	RT	175		966.11	963.36																								
-L- 222+80	RT	176			963.36												12												
-L- 222+80	LT	177		966.11	963.36																								
-L- 222+80	LT	178			963.36												12												
-L- 232+37	RT	181		984.88	982.13																								
-L- 232+37	RT	182			982.13												36												
-L- 232+40	LT	183																											
-L- 233+44	LT	184		986.69	983.94																								
-L- 233+44	LT	185			983.94												12												
-L- 233+66	LT	186															36												
-L- 234+60	RT	190																152											
-L- 235+20	LT	191															72												
-L- 241+03	LT	192																											
-L- 242+58	LT	193																											
-L- 246+66	RT	195		986.20	970.27																								
-L- 246+66	RT	196			970.27										40														
-L- 246+82	LT	197		984.90	971.13																								
-L- 246+82	LT	198			971.13										48														
-L- 247+30	LT	199		996.84	994.09																								
-L- 247+30	LT	200			994.09												36												
SHEET TOTALS													60		88		236	152								20			

STATION	STRUCTURE NO.	15" SIDE DRAIN PIPE	18" SIDE DRAIN PIPE	24" SIDE DRAIN PIPE	ENDWALLS STD. 838.01, STD. 838.11 OR STD. 838.80 (UNLESS NOTED OTHERWISE) CU. YARDS R.C.P.	C.S.P.	QUANITIES FOR DRAINAGE STRUCTURES PER EACH (0' THRU 5.0')	*TOTAL L.F. FOR PAY QUANTITY SHALL BE COL. 'A' + (1.3 X COL.'B') LIN. FT. A 5.0' THRU 10.0'	B 10.0' AND ABOVE	C.B. STD. 840.01 OR STD. 840.02	FRAME, GRATES, AND HOOD STANDARD 840.03 TYPE OF GRATE E	F	G	D.I. STD. 840.14 OR STD. 840.15	D.I. FRAME AND GRATE STD. 840.16	M.D.I. TYPE "A" STD. 840.17 OR 840.26	M.D.I. TYPE "B" STD. 840.18 OR 840.27	M.D.I. TYPE "D" STD. 840.19 OR 840.28	M.D.I. FRAME WITH GRATE STD. 840.20	M.D.I. (N.S.) FRAME WITH TWO GRATES STD. 840.29	M.D.I. (N.S.) FRAME WITH GRATE STD. 840.24	M.D.I. (N.S.) FRAME WITH TWO GRATES STD. 840.24	J.B. STD. 840.31 OR 840.32	T.B.J.B. STD. 840.34	MANHOLE STD. 840.51	M.H. STD. 840.51 OR 840.53	M.H. FRAME AND COVER STD. 840.54
-L- 213+06	166																										
-L- 213+52	167						1										1			1							
-L- 213+52	168																										
-L- 217+41	169					2.8																					
-L- 220+07	170	24																									
-L- 222+80	175						1										1			1							
-L- 222+80	176																										
-L- 222+80	177						1										1			1							
-L- 222+80	178																										
-L- 232+37	181						1										1			1							
-L- 232+37	182																										
-L- 232+40	183	28																									
-L- 233+44	184						1										1			1							
-L- 233+44	185																										
-L- 233+66	186					0.7																					
-L- 234+60	190					1																					
-L- 235+20	191					0.7																					
-L- 241+03	192	28																									
-L- 242+58	193	28																									
-L- 246+66	195						1	5	5.93														1				1
-L- 246+66	196																										
-L- 246+82	197						1	5	3.77														1				1
-L- 246+82	198																										
-L- 247+30	199						1										1			1							
-L- 247+30	200																										
SHEET TOTALS		108				5.2	8	10	9.7								6			6			2				2

STATION	STRUCTURE NO.	CORR. STEEL ELBOWS NO. & SIZE	CONC. COLLARS CL. "B" C.Y. STD. 840.72	CONC. & BRICK PIPE PLUG, C.Y. STD. 840.71	PIPE REMOVAL LIN. FT.	REMARKS
-L- 213+06	166		0.4465			COLLAR & EXTEND
-L- 213+52	167					
-L- 213+52	168	2-15"			38	-L- STA. 215+10 REMOVE 15" CSP, HW
-L- 217+41	169				38	HDWL, REMOVE 30" CSP, REPLACE 36"
-L- 220+07	170					
-L- 222+80	175					
-L- 222+80	176	2-15"				
-L- 222+80	177					
-L- 222+80	178	2-15"				
-L- 232+37	181					
-L- 232+37	182	2-15"				
-L- 232+40	183				150	REMOVE 15" CSP
-L- 233+44	184					
-L- 233+44	185	2-15"				
-L- 233+66	186	2-15"				HDWL
-L- 234+60	190	3-18"				HDWL
-L- 235+20	191	2-15"				HDWL
-L- 241+03	192					
-L- 242+58	193					
-L- 246+66	195					REMOVE HW
-L- 246+66	196					RETAIN & EXTEND
-L- 246+82	197					REMOVE HW
-L- 246+82	198					RETAIN & EXTEND
-L- 247+30	199					
-L- 247+30	200	2-15"				
SHEET TOTALS		16-15", 2-18"	0.4465		226	

SIZE / THICKNESS OR GAUGE

ABBREVIATIONS

C.B.	CATCH BASIN
N.D.I.	NARROW DROP INLET
D.I.	DROP INLET
M.D.I.	MEDIAN DROP INLET
M.D.I.(N.S.)	MEDIAN DROP INLET (NARROW SLOT)
J.B.	JUNCTION BOX
M.H.	MANHOLE
T.B.D.I.	TRAFFIC BEARING DROP INLET
T.B.J.B.	TRAFFIC BEARING JUNCTION BOX

D11CADSRV 1/14/2005 C:\rdy\r-3415\Drainage_summaries.xls

D11CADSRV

COMPUTED BY: MA Lo DATE: 1/26/05

CHECKED BY: J L Laws DATE: 1/26/05

PROJECT NO.	SHEET NO.
R-3415	3-I

STATE OF NORTH CAROLINA
DIVISION OF HIGHWAYS

LIST OF PIPES, ENDWALLS, ETC. (FOR PIPES 48" & UNDER)

STATION	LOCATION (LT, RT, OR CL)'	STRUCTURE NO. FROM	STRUCTURE NO. TO	TOP ELEVATION	INVERT ELEVATION	INVERT ELEVATION	SLOPE CRITICAL	CLASS III R.C. PIPE (UNLESS NOTED OTHERWISE) SIZE 12"	15"	18"	24"	30"	36"	42"	48"	BITUMINOUS COATED C.S. PIPE TYPE B (UNLESS NOTED OTHERWISE) SIZE 12"	15"	18"	24"	30"	36"	42"	48"	CLASS III R.C. PIPE OR C.S. PIPE, TYPE IR ALUMINIZED OR HDPE PIPE, TYPE S OR D SIZE 12"	15"	18"	24"	30"	36"
THICKNESS OR GAUGE																.064	.064	.064	.064	.079	.079	.109	.109						
-L- 247+30	RT	201		996.84	994.09																								
-L- 247+30	RT	202			994.09												20												
-L- 250+45	CL	203			996.60	1004.90																							
-L- 252+91	LT	204																											
-L- 253+83	LT	205																											
-L- 255+31	LT	206																											
-L- 255+69	RT	207																											
-L- 257+76	LT	208																											
-L- 260+12	LT	209																											
-L- 262+07	RT	210																											
-L- 263+41	RT	211																											
-L- 264+75	CL	212								96																			
-L- 267+68	RT	213		1040.43	1037.43																								
-L- 268+88	RT	213	214		1037.43	1036.43		168																					
-L- 269+36	RT	214		1039.40	1036.40																								
-L- 269+61	RT	214	215		1036.40	1035.87		48																					
-L- 269+90	RT	215		1039.52	1035.87																								
-L- 269+90	RT	216			1035.87	1022.00																		156					
-Y7- 16+08	CL	217			1025.53	1020.60					64																		
-L- 271+39	LT	218		1040.40	1037.40																								
-L- 272+22	RT	219		1040.50	1038.25																								
-L- 272+49	RT	219	220		1038.25	1038.04																		48					
-L- 272+75	RT	220		1041.10	1038.04																								
-L- 272+75	RT	220	221		1038.04	1037.96		8																					
-L- 272+75	RT	221		1041.46	1037.96																								
-L- 272+75	CL	221	222		1037.96	1036.46			36																				
SHEET TOTALS								224	36	96	64						20							204					

STATION	15" SIDE DRAIN PIPE	18" SIDE DRAIN PIPE	24" SIDE DRAIN PIPE	ENDWALLS STD. 838.01, STD. 838.11 OR STD. 838.80 (UNLESS NOTED OTHERWISE) CU. YARDS R.C.P.	C.S.P.	QUANTITIES FOR DRAINAGE STRUCTURES PER EACH (0' THRU 5.0')	*TOTAL L.F. FOR PAY QUANTITY SHALL BE COL. 'A' + (1.3 X COL. 'B') LIN. FT. A 5.0' THRU 10.0'	B 10.0' AND ABOVE	C.B. STD. 840.01 OR STD. 840.02	FRAME, GRATES, AND HOOD STANDARD 840.03 TYPE OF GRATE E	F	G	D.I. STD. 840.14 OR STD. 840.15	D.I. FRAME AND GRATE STD. 840.16	M.D.I. TYPE "A" STD. 840.17 OR 840.26	M.D.I. TYPE "B" STD. 840.18 OR 840.27	M.D.I. TYPE "D" STD. 840.19 OR 840.28	M.D.I. FRAME WITH GRATE STD. 840.20	M.D.I. (N.S.) FRAME WITH TWO GRATES STD. 840.29	M.D.I. (N.S.) FRAME WITH GRATE STD. 840.24	M.D.I. (N.S.) FRAME WITH TWO GRATES STD. 840.24	J.B. STD. 840.31 OR 840.32	T.B.J.B. STD. 840.34	MANHOLE STD. 840.51	M.H. STD. 840.53 OR 840.53	M.H. FRAME AND COVER STD. 840.54	24" WELDED STEEL PIPE, 0.375" THICK, GRADE B,	CORR. STEEL ELBOWS NO. & SIZE	CONC. COLLARS CL. "B" C.Y. STD. 840.72	CONC. & BRICK PIPE PLUG, C.Y. STD. 840.71	PIPE REMOVAL LIN. FT.	REMARKS
-L- 247+30						1										1			1										
-L- 247+30																													
-L- 250+45																					65				0.130		BORE & JACK, PLUG 18", REMOVE HW
-L- 252+91		24																								70	REMOVE 18" RCP, 18" CSP, HW
-L- 253+83		28																								25	REMOVE 15" RCP
-L- 255+31		24																								30	REMOVE 15" RCP
-L- 255+69		60																								70	REMOVE 18" CSP
-L- 257+76		48																								80	REMOVE 15" RCP
-L- 260+12	28																									25	REMOVE 15" RCP
-L- 262+07	32																										
-L- 263+41	36																									80	REMOVE 15" RCP
-L- 264+75																										53	REMOVE 18" CSP
-L- 267+68						1			1		1																
-L- 268+88																											
-L- 269+36						1			1	1																	
-L- 269+61																											
-L- 269+90						1												1		1							
-L- 269+90																											
-Y7- 16+08																											REMOVE & REPLACE 24" CSP
-L- 271+39						1			1		1																
-L- 272+22						1							1	1													
-L- 272+49																											
-L- 272+75						1							1	1													
-L- 272+75																											
-L- 272+75						1			1			1															REMOVE DI
-L- 272+75																										36	REMOVE 15" CSP
SHEET TOTALS	96	184				8			4	1	2	1	2	2		1		1			1		1		65				0.130	469	

ABBREVIATIONS

C.B.	CATCH BASIN
N.D.I.	NARROW DROP INLET
D.I.	DROP INLET
M.D.I.	MEDIAN DROP INLET
M.D.I.(N.S.)	MEDIAN DROP INLET (NARROW SLOT)
J.B.	JUNCTION BOX
M.H.	MANHOLE
T.B.D.I.	TRAFFIC BEARING DROP INLET
T.B.J.B.	TRAFFIC BEARING JUNCTION BOX

D11CADSRV

COMPUTED BY: RA [signature] DATE: 1/26/05

CHECKED BY: J. L. Laws DATE: 1/26/05

PROJECT NO.	SHEET NO.
R-3415	3-J

STATE OF NORTH CAROLINA
DIVISION OF HIGHWAYS

LIST OF PIPES, ENDWALLS, ETC. (FOR PIPES 48" & UNDER)

ABBREVIATIONS

C.B.	CATCH BASIN
N.D.I.	NARROW DROP INLET
D.I.	DROP INLET
M.D.I.	MEDIAN DROP INLET
M.D.I.(N.S.)	MEDIAN DROP INLET (NARROW SLOT)
J.B.	JUNCTION BOX
M.H.	MANHOLE
T.B.D.I.	TRAFFIC BEARING DROP INLET
T.B.J.B.	TRAFFIC BEARING JUNCTION BOX

STATION (SIZE / THICKNESS OR GAUGE)	LOCATION (LT, RT, OR CL)	STRUCTURE NO. FROM	STRUCTURE NO. TO	TOP ELEVATION	INVERT ELEVATION	INVERT ELEVATION	SLOPE CRITICAL	CLASS III R.C. PIPE (UNLESS NOTED OTHERWISE) 12"	15"	18"	24"	30"	36"	42"	48"	BITUMINOUS COATED C.S. PIPE TYPE B (UNLESS NOTED OTHERWISE) 12" .064	15" .064	18" .064	24" .064	30" .079	36" .079	42" .109	48" .109	CLASS III R.C. PIPE OR C.S. PIPE, TYPE IR ALUMINIZED OR HDPE PIPE, TYPE S OR D 12"	15"	18"	24"	30"	36"	15" SIDE DRAIN PIPE	18" SIDE DRAIN PIPE	24" SIDE DRAIN PIPE	ENDWALLS STD. 838.01, STD. 838.11 OR STD. 838.80 (UNLESS NOTED OTHERWISE) CU. YARDS R.C.P.	C.S.P.	QUANITIES FOR DRAINAGE STRUCTURES PER EACH (0' THRU 5.0')	*TOTAL L.F. FOR PAY QUANTITY SHALL BE COL. 'A' + (1.3 X COL.'B') LIN. FT. A 5.0' THRU 10.0'	B 10.0' AND ABOVE	C.B. STD. 840.01 OR STD. 840.02	FRAME, GRATES, AND HOOD STANDARD 840.03 TYPE OF GRATE E	F	G	D.I. STD. 840.14 OR STD. 840.15	D.I. FRAME AND GRATE STD. 840.16	M.D.I. TYPE "A" STD. 840.17 OR 840.26	M.D.I. TYPE "B" STD. 840.18 OR 840.27	M.D.I. TYPE "D" STD. 840.19 OR 840.28	M.D.I. FRAME WITH GRATE STD. 840.20	M.D.I. (N.S.) FRAME WITH TWO GRATES STD. 840.29	M.D.I. (N.S.) FRAME WITH GRATE STD. 840.24	M.D.I. (N.S.) FRAME WITH TWO GRATES STD. 840.24	J.B. STD. 840.31 OR 840.32	T.B.J.B. STD. 840.34	MANHOLE STD. 840.51	M.H. STD. 840.51 OR 840.53	M.H. FRAME AND COVER STD. 840.54	CORR. STEEL ELBOWS NO. & SIZE	CONC. COLLARS CL. "B" C.Y. STD. 840.72	CONC. & BRICK PIPE PLUG, C.Y. STD. 840.71	PIPE REMOVAL LIN. FT.	REMARKS
-L- 272+75	LT	222		1041.46	1036.46																														1			1		1																				
-L- 272+07	LT	218	222		1037.40	1036.46			132																																																			
-L- 272+97	LT	223				1035.70																				28																																		
-L- 273+53	RT	220	224		1038.25	1040.25			152																																																		40	REMOVE 12" CSP
-L- 274+31	RT	224		1042.50	1040.25																														1							1	1																	
-L- 274+10	LT	222	225		1036.46	1040.55			264																																																			
-L- 275+44	LT	225		1043.55	1040.55																														1			1		1																			36	REMOVE 15" CSP
-L- 279+27	RT	226		1043.40	1041.15																														1							1	1																	
-L- 279+27	CL	226	227		1041.15	1040.64			52																																																			
-L- 279+27	LT	227		1043.64	1040.64																														1			1		1																				
-L- 280+47	LT	227	228		1040.64	1033.64			236																																																			
-L- 281+60	LT	229				1029.50																					104																																	
-L- 281+67	LT	228		1041.98	1033.64																														1	3.34		1			1																			
-L- 282+09	LT	228	230		1036.81	1033.64				80																																																	
-L- 282+52	LT	230		1041.81	1036.81																														1			1	1																					
-L- 282+52	CL	230	231		1036.81	1037.97				36																																																36	REMOVE 18" CSP
-L- 282+52	RT	231		1043.31	1037.97																														1	0.34		1	1																					
-L- 282+57	RT	231	232		1037.97	1038.25																				24																																	20	REMOVE 6"CSP
-L- 282+61	RT	232		1043.91	1038.25																														1							1	1																	
-L- 283+04	RT	231	233		1037.97	1040.51			160																																																			
-L- 284+13	RT	233		1043.91	1041.51																														1			1			1																		140	REMOVE 12" CSP, REMOVE DI
-L- 284+13	RT	233	234		1040.51	1040.55																				12																																		
-L- 284+13	RT	234		1042.80	1040.55																														1							1	1																	
-L- 284+50	LT	230	235		1037.97	1039.57			376																																																			
-L- 286+32	LT	235		1045.42	1039.57																														1	0.85		1		1																				
SHEET TOTALS									1372	116															36	28	104								12	4.53		8	2	4	2	4	4																272	

D11CAD-224782

COMPUTED BY: [signature] DATE: 4/20/06

CHECKED BY: [signature] DATE: 4/20/06

PROJECT NO.	SHEET NO.
R-3415	3-K

STATE OF NORTH CAROLINA
DIVISION OF HIGHWAYS

LIST OF PIPES, ENDWALLS, ETC. (FOR PIPES 48" & UNDER)

STATION	LOCATION (LT, RT, OR CL)	STRUCTURE NO. FROM	STRUCTURE NO. TO	TOP ELEVATION	INVERT ELEVATION	INVERT ELEVATION	SLOPE CRITICAL	CLASS III R.C. PIPE (UNLESS NOTED OTHERWISE) 12" PLASTIC	15"	18"	24"	30"	36"	42"	48"
-L- 286+32	CL	235	236		1045.42	1042.15			36						
-L- 286+32	RT	236		1045.15	1042.15										
-L- 286+32	RT	236	237		1042.15	1043.15									
-L- 286+32	RT	237		1045.40	1043.15										
-L- 286+73	RT	236	238		1042.15	1042.66			80						
-L- 287+14	RT	238		1045.66	1042.66										
-L- 286+82	LT	235	239		1039.42	1042.82			96						
-L- 287+32	LT	239		1045.82	1042.82										
-L- 287+32	LT	239	240		1042.82	1043.57									
-L- 287+32	LT	240		1045.82	1043.57										
-L- 287+87	LT	239	241		1042.82	1043.45			108						
-L- 288+43	LT	241		1046.45	1043.45										
-L- 288+43	LT	241	242		1043.45	1044.23									
-L- 288+43	LT	242		1046.48	1044.23										
SHEET 3-K TOTALS									320						
SHEET 3-A TOTALS									148	88					
SHEET 3-B TOTALS									196						
SHEET 3-C TOTALS										216	64				
SHEET 3-D TOTALS									452	24					
SHEET 3-E TOTALS										28	132		120		
SHEET 3-F TOTALS								30		72	140		48		
SHEET 3-G TOTALS									32	164					
SHEET 3-H TOTALS													60		88
SHEET 3-I TOTALS									224	36	96	64			
SHEET 3-J TOTALS									1372	116					
PROJECT TOTALS								30	2744	744	432	64	228		88

STATION	BITUMINOUS COATED C.S. PIPE TYPE B (UNLESS NOTED OTHERWISE) 12"	15" .064	18" .064	24" .064	30" .079	36" .079	42" .109	48" .109	CLASS III R.C. PIPE OR C.S. PIPE, TYPE IR ALUMINIZED OR HDPE PIPE, TYPE S OR D 12"	15"	18"	24"	30"	36"	15" SIDE DRAIN PIPE	18" SIDE DRAIN PIPE	24" SIDE DRAIN PIPE	ENDWALLS STD. 838.01, STD. 838.11 OR STD. 838.80 (UNLESS NOTED OTHERWISE) CU. YARDS R.C.P.	C.S.P.
-L- 286+32																			
-L- 286+32																			
-L- 286+32										12									
-L- 286+32																			
-L- 286+73																			
-L- 287+14																			
-L- 286+82																			
-L- 287+32																			
-L- 287+32										12									
-L- 287+32																			
-L- 287+87																			
-L- 288+43																			
-L- 288+43										12									
-L- 288+43																			
SHEET 3-K TOTALS										36									
SHEET 3-A TOTALS		108													352				
SHEET 3-B TOTALS		240	32							16	20				64				
SHEET 3-C TOTALS		104	72								20				176	328	32		
SHEET 3-D TOTALS		32													152	36			
SHEET 3-E TOTALS		108									296	436			180			6.8	
SHEET 3-F TOTALS		140	40								64				80	28		3.4	
SHEET 3-G TOTALS		92								64	48				24				
SHEET 3-H TOTALS		236	152								20				108				5.2
SHEET 3-I TOTALS		20								204					96	184			
SHEET 3-J TOTALS										36	28	104							
PROJECT TOTALS		1080	296							356	496	540			1232	576	32	10.2	5.2
																		16.0	

STATION	QUANITIES FOR DRAINAGE STRUCTURES PER EACH (0' THRU 5.0')	*TOTAL L.F. FOR PAY QUANTITY SHALL BE COL. 'A' + (1.3 X COL.'B') LIN. FT. A 5.0' THRU 10.0'	B 10.0' AND ABOVE	C.B. STD. 840.01 OR STD. 840.02	FRAME, GRATES, AND HOOD STANDARD 840.03 TYPE OF GRATE E	F	G	D.I. STD. 840.14 OR STD. 840.15	D.I. FRAME AND GRATE STD. 840.16	M.D.I. TYPE "A" STD. 840.17 OR 840.26	M.D.I. TYPE "B" STD. 840.18 OR 840.27	M.D.I. TYPE "D" STD. 840.19 OR 840.28	M.D.I. FRAME WITH GRATE STD. 840.20	M.D.I. (N.S.) FRAME WITH TWO GRATES STD. 840.29	M.D.I. (N.S.) FRAME WITH GRATE STD. 840.24	M.D.I. (N.S.) FRAME WITH TWO GRATES STD. 840.24	J.B. STD. 840.31 OR 840.32	T.B.J.B. STD. 840.34	MANHOLE STD. 840.51	M.H. STD. 840.51 OR 840.53	M.H. FRAME AND COVER STD. 840.54
-L- 286+32																					
-L- 286+32	1			1			1														
-L- 286+32																					
-L- 286+32	1							1	1												
-L- 286+73																					
-L- 287+14	1			1		1															
-L- 286+82																					
-L- 287+32	1			1			1														
-L- 287+32																					
-L- 287+32	1							1	1												
-L- 287+87																					
-L- 288+43	1			1			1														
-L- 288+43																					
-L- 288+43	1							1	1												
SHEET 3-K TOTALS	7			4		1	3	3	3												
SHEET 3-A TOTALS	6										6					6					
SHEET 3-B TOTALS	6										5			4		1		1			
SHEET 3-C TOTALS	4										4			4							
SHEET 3-D TOTALS	7							3	3		4			2		2					
SHEET 3-E TOTALS	6										6			3		3					
SHEET 3-F TOTALS	9	3.6						1	1		7			2		5	1				1
SHEET 3-G TOTALS	8	5	0.97								7			5		2	1				1
SHEET 3-H TOTALS	8	10	9.7								6			6			2				2
SHEET 3-I TOTALS	8			4	1	2	1	2	2		1			1				1			1
SHEET 3-J TOTALS	12	4.53		8	2	4	2	4	4												
PROJECT TOTALS	81	23.13	10.67	16	3	7	6	13	13		46			27		19	4	2			5
		37.00																			9

STATION	BERM DRAINAGE OUTLET STD. 850.10	18" WELDED STEEL PIPE, 0.375" THICK, GRADE B,	24" WELDED STEEL PIPE, 0.375" THICK, GRADE B,	30" WELDED STEEL PIPE, 0.531" THICK, GRADE B,	CORR. STEEL ELBOWS NO. & SIZE	CONC. COLLARS CL. "B" C.Y. STD. 840.72	CONC. & BRICK PIPE PLUG, C.Y. STD. 840.71	PIPE REMOVAL LIN. FT.	REMARKS
-L- 286+32									
-L- 286+32									
-L- 286+32									
-L- 286+32									
-L- 286+73									
-L- 287+14									
-L- 286+82									
-L- 287+32									
-L- 287+32									
-L- 287+32									
-L- 287+87									
-L- 288+43									
-L- 288+43									
-L- 288+43									
SHEET 3-K TOTALS									
SHEET 3-A TOTALS					2-15"	2.489		28	
SHEET 3-B TOTALS					10-15", 2-18"	4.532		76	
SHEET 3-C TOTALS					6-15"	0.893		575	
SHEET 3-D TOTALS					4-15"	1.691		373	
SHEET 3-E TOTALS	1				8-15"	0.893		149	
SHEET 3-F TOTALS	1			100	8-15", 2-18"	0.447		423	
SHEET 3-G TOTALS		148	96		4-15"	2.489	0.390	230	
SHEET 3-H TOTALS					16-15", 2-18"	0.447		226	
SHEET 3-I TOTALS			65				0.130	469	
SHEET 3-J TOTALS								272	
PROJECT TOTALS	2	148	161	100	58-15", 6-18"	13.880	0.520	2821	
						27.0	0.600		

ABBREVIATIONS

C.B.	CATCH BASIN
N.D.I.	NARROW DROP INLET
D.I.	DROP INLET
M.D.I.	MEDIAN DROP INLET
M.D.I.(N.S.)	MEDIAN DROP INLET (NARROW SLOT)
J.B.	JUNCTION BOX
M.H.	MANHOLE
T.B.D.I.	TRAFFIC BEARING DROP INLET
T.B.J.B.	TRAFFIC BEARING JUNCTION BOX

D11CADSRV,1/14/2005,C:\rdy\r-3415\Drainage_summaries.xls

D11CADSRV

COMPUTED BY: [signature] DATE: 1/26/05

CHECKED BY: J. L. Law [signature] DATE: 1/26/05

PROJECT NO.	SHEET NO.
R-3415	3-L

STATE OF NORTH CAROLINA
DIVISION OF HIGHWAYS

LIST OF PIPES, ENDWALLS, ETC. (FOR PIPES 54" & OVER)

STATION	LOCATION (LT, RT, OR CL)	STRUCTURE NO. FROM	STRUCTURE NO. TO	TOP ELEVATION	INVERT ELEVATION	INVERT ELEVATION	SLOPE CRITICAL	CLASS III R.C. PIPE (UNLESS NOTED OTHERWISE) 54"	60"	66"	72"	78"	84"	BITUMINOUS COATED C.S. PIPE TYPE B (UNLESS NOTED OTHERWISE) 54" (.109, .138, .168; SHOP ELONGATED .138, .168)	60" (.138, .168)	66" (.138, .168)	72" (.139, .168)	STRUCTURAL PLATE PIPE 60" (12, 10)	66" (12, 10)	72" (12, 10)	REINFORCED ENDWALLS WITH R.C. - C.Y.	REINFORCED ENDWALLS WITH C.S. - C.Y.	MASONRY DRAINAGE STRUCTURES CUBIC YARDS	C.B. STD. 840.01 OR 840.02	FRAMES, GRATES & HOOD STANDARD 840.03 TYPE OF GRATE E	F	G	JB ED (SEE SPECIAL DETAIL)	MH FRAME AND COVER (SEE SPECIAL DETAIL)	REINF. CONC. FLARED END SECTIONS NO. & SIZE	CORR. STEEL FLARED END SECTIONS NO. & Size	CORR. STEEL ELBOWS NO. & SIZE	CONC. COLLARS CL. "B" (SEE SPECIAL DETAIL)	PIPE REMOVAL LIN. FT.	REMARKS **(SEE SPECIAL DETAIL)
-L- 153+49	RT	125							32												5.9												4		RETAIN, COLLAR, & EXTEND **
-L- 153+49	LT	126		916.80	902.87																		10.1					1	1						SEE SPECIAL DETAIL
-L- 153+49	LT	127							28																										SEE SPECIAL DETAIL
-L- 222+29	LT	171		965.73	955.39																		9.8					1	1						SEE SPECIAL DETAIL
-L- 222+29	LT	172							20												5.9														RETAIN & EXTEND **
-L- 222+55	RT	173		965.57	950.60																		10.1					1	1						SEE SPECIAL DETAIL
-L- 222+55	RT	174							20																										RETAIN & EXTEND **
-L- 225+52	RT	179						20																									3		RETAIN, COLLAR, & EXTEND **
-L- 225+52	LT	180						16													5.2												3		RETAIN, COLLAR, & EXTEND **
-L- 233+63	RT	187						28																									3		RETAIN, COLLAR, & EXTEND **
-L- 234+20	LT	188		979.29	963.72																		8.4					1	1						SEE SPECIAL DETAIL
-L- 234+20	LT	189						40													5.2														RETAIN & EXTEND **
PROJECT TOTALS								104	100												22.5		38.4					4	4				13.0		

ABBREVIATIONS

- C.B. CATCH BASIN
- N.D.I. NARROW DROP INLET
- D.I. DROP INLET
- M.D.I. MEDIAN DROP INLET
- M.D.I.(N.S.) MEDIAN DROP INLET (NARROW SLOT)
- J.B. JUNCTION BOX
- M.H. MANHOLE
- T.B.D.I. TRAFFIC BEARING DROP INLET
- T.B.J.B. TRAFFIC BEARING

COMPUTED BY: G L Laws DATE: 5/3/2006
CHECKED BY: M A DATE: 5/3/2006

PROJECT REFERENCE NO.	SHEET NO.
R-3415	3-M

DIVISION OF HIGHWAYS
STATE OF NORTH CAROLINA
GUARDRAIL SUMMARY

D11CADS

"N" = DISTANCE FROM EDGE OF LANE TO FACE OF GUARDRAIL
TOTAL SHOULDER WIDTH = DISTANCE FROM EDGE OF TRAVEL LANE TO SHOULDER BREAK POINT.
FLARE LENGTH = DISTANCE FROM LAST SECTION OF PARALLEL GUARDRAIL TO END OF GUARDRAIL
W = TOTAL WIDTH OF FLARE FROM BEGIN

G = GATING IMPACT ATTENUATOR TYPE 350
NG = NON-GATING IMPACT ATTENUATOR TYPE 350

SURVEY LINE	BEG. STA.	END STA.	LOCATION	LENGTH			WARRANT POINT		"N" DIST. FROM E.O.L.	TOTAL SHOUL WIDTH	FLARE LENGTH		W		ANCHORS									IMPACT ATTENUATOR TYPE 350		SINGLE FACED CONCRETE BARRIER	REMOVE EXISTING GUARDRAIL	REMOVE & STOCKPILE EXISTING GUARDRAIL	REMARKS
				STRAIGHT	SHOP CURVED	DOUBLE FACED	APPROACH END	TRAILING END			APPROACH END	TRAILING END	APPROACH END	TRAILING END	XI MOD	XI	GRAU 350	M-350	XIII	AT-1	VI MOD	BIC		G	NG				
-L-	13+50.00	17+37.50	RT	387.50			14+50.00	17+00.00	8	11	50	50	1	1			2												
-L-	22+00.00	25+25.00	LT	325.00			23+00.00	24+50.00	8	11	50	50	1	1			2												
-L-	31+37.50	36+00.00	LT	462.50			32+00.00	35+50.00	8	11	50	50	1	1			2												
-L-	36+75.00	40+98.00	RT	423.00			37+50.00	40+98.00	8	11	50	50	1	1			2												
-L-	43+50.00	44+87.50	RT	137.50			44+00.00	44+50.00	8	11	50	50	1	1			2												
-L-	47+00.00	53+50.00	LT	650.00			47+50.00	53+00.00	8	11	50	50	1	1			2												
-L-	56+75.00	61+75.00	RT	500.00			57+75.00	61+50.00	8	11	50	50	1	1			2												
-L-	72+75.00	83+50.00	RT	1075.00			73+75.00	83+50.00	8	11	50	50	1	1			2												
-L-	75+75.00	84+12.50	LT	837.50			76+00.00	83+50.00	8	11	50	50	1	1			2												
-L-	105+75.00	107+50.00	RT	175.00			106+00.00	107+00.00	8	11	50	50	1	1			2												
-L-	115+62.50	124+75.00	LT	912.50			116+50.00	123+75.00	8	11	50	50	1	1			2												
-L-	116+75.00	120+00.00	RT	325.00			117+00.00	119+75.00	8	11	50	50	1	1			2												
-L-	120+50.00	123+75.00	RT	325.00			120+50.00	123+50.00	8	11	50	50	1	1			2												
-L-	139+50.00	142+04.00	RT	254.00	14.00		140+50.00	141+75.00	8	11	50		1				1			1									ANCHOR UNIT NOT ADDED TO GUARDRAIL LENGTH
-L-	140+00.00	144+37.50	LT	437.50			141+00.00	143+50.00	8	11	50	50	1	1			2												
-L-	148+75.00	156+06.25	LT	731.25	35.00		149+75.00	155+25.00	8	11	50		1				1												
-Y3-	14+00.00	16+68.75	RT	268.75			15+00.00	16+68.75	6	9	50		1				1												
-L-	151+50.00	155+37.50	RT	387.50			152+50.00	155+00.00	8	11	50	50	1	1			2												
-L-	159+75.00	163+25.00	LT	350.00			160+75.00	162+25.00	8	11	50	50	1	1			2												
-L-	168+25.00	174+25.00	RT	600.00			169+25.00	173+25.00	8	11	50	50	1	1			2												
-L-	169+25.00	174+75.00	LT	550.00			170+00.00	173+75.00	8	11	50	50	1	1			2												
-L-	188+25.00	190+75.00	LT	250.00			189+25.00	189+75.00	8	11	50	50	1	1			2												
-L-	197+75.00	201+00.00	LT	325.00	44.00		198+75.00	200+00.00	8	11	50	50	1	1			2												
-L-	207+25.00	214+75.00	RT	750.00			208+25.00	213+75.00	8	11	50	50	1	1			2												
-L-	220+25.00	224+12.50	RT	387.50			221+25.00	224+12.50	8	11	50	50	1	1			2												
-L-	220+37.50	223+87.50	LT	350.00			221+25.00	223+87.50	8	11	50	50	1	1			2												
-L-	224+62.50	227+75.00	LT	312.50			224+62.50	226+75.00	8	11	50	50	1	1			2												
-L-	224+62.50	228+00.00	RT	337.50			224+62.50	227+00.00	8	11	50	50	1	1			2												
-L-	231+25.00	236+00.00	RT	475.00			232+25.00	235+00.00	8	11	50	50	1	1			2												
-L-	232+75.00	236+50.00	LT	375.00			233+75.00	235+50.00	8	11	50	50	1	1			2												
-L-	244+25.00	248+50.00	RT	425.00			245+25.00	247+50.00	8	11	50	50	1	1			2												
-L-	244+50.00	252+75.00	LT	825.00			245+50.00	252+75.00	8	11	50	50	1	1			2												
	PROJECT SUBTOTAL			14927.00	93.00												61			1									
	LESS ANCHOR DEDUCTION																												
	GRAU-350 61@50'			3050.00																									
	PROJECT TOTAL			11877.00	93.00												61			1									
	SAY			11887.50	100.00												61			1									
	ADDITIONAL GUARDRAIL POST			10 EACH																									

COMPUTED BY: [illegible] DATE: 4/20/06
CHECKED BY: [illegible] DATE: 4/20/2006

PROJECT NO.	SHEET NO.
R-3415	3-N

STATE OF NORTH CAROLINA
DIVISION OF HIGHWAYS

SUMMARY OF EARTHWORK

LOCATION	UNCL. EXCAVATION	UNDERCUT	EMBT+15%	BORROW	WASTE
-L- 14+50.00 TO 47+00.00	6797		10904	4107	
-Y- 11+75.00 TO 13+33.00	23		38	15	
-D1- 10+00.00 TO 11+70.00	416				416
SUBTOTAL	7236		10942	4122	416
-L- 47+50.00 TO 79+00.00	11318		9747		1571
SUBTOTAL	11318		9747		1571
-L- 79+50.00 TO 101+50.00	12312		8194		4118
SUBTOTAL	12312		8194		4118
-L- 102+00.00 TO 119+00.00	1727		2527	800	
SUBTOTAL	1727		2527	800	
-L- 119+50.00 TO 141+50.00	3971		4630	659	
-D2- 10+00.00 TO 11+54.00	861				861
-D3- 10+00.00 TO 11+55.00	417				417
-D4- 10+00.00 TO 11+69.00	264				264
-D5- 10+00.00 TO 12+88.00	1182				1182
SUBTOTAL	6695		4630	659	2724
-L- 142+00.00 TO 171+00.00	18842		10104		5666
-Y3- 11+00.00 TO 17+00.00	1591		3304	1713	
SUBTOTAL	20433		13408	1713	5666
-L- 171+50.00 TO 201+00.00	4572		6419	1847	
SUBTOTAL	4572		6419	1847	
-L- 201+50.00 TO 233+50.00	7107		7066		41
SUBTOTAL	7107		7066		41
-L- 234+00.00 TO 246+50.00	3747		5037	1290	
SUBTOTAL	3747		5037	1290	
-L- 247+00.00 TO 270+00.00	2159		5934	3775	
SUBTOTAL	2159		5934	3775	
-L- 270+50.00 TO 290+00.00	398		3378	2980	
SUBTOTAL	398		3378	2980	
TOTAL	77704		77282	17186	14536
LOSS DUE TO CLEAR & GRUB	-13500			13500	
EARTH WASTE TO REPL. BORROW				-14536	
ESTIMATED SHOULDER MATERIAL				11180	
PROJECT TOTAL	64204		77282	27330	14536
5% EST. TO REPLACE TOPSOIL				1367	
GRAND TOTAL	64204			28697	
SAY	64500			29000	
ESTIMATED UNDERCUT		5000			

ESTIMATED DRAINAGE DITCH EXCAVATION = 4000 CY

SUMMARY OF EXISTING ASPHALT PAVEMENT REMOVAL

LINE	BEG. STA.	END. STA.	LOCATION	WIDTH	YD2
-L-	60+30.00	61+30.00	RT	3.00	33.33
-L-	84+25.00	85+50.00	RT	2.00	27.78
-L-	123+50.00	126+70.00	RT	3.00	106.67
-L-	140+50.00	143+32.00	LT	3.50	109.67
-L-	156+07.00	156+87.00	LT	4.00	35.56
-L-	156+12.00	156+96.00	RT	4.00	37.33
-L-	157+25.00	160+55.00	RT	4.00	146.67
-L-	215+05.00	216+00.00	RT	4.00	42.22
-L-	222+20.00	222+60.00	RT	4.00	17.78
-L-	227+50.00	229+75.00	LT	4.00	100.00
-L-	227+80.00	229+10.00	RT	4.00	57.78
-L-	233+00.00	234+20.00	RT	4.00	53.33
-L-	233+00.00	234+50.00	LT	3.50	58.33
-L-	241+00.00	243+50.00	RT	4.00	111.11
				PROJECT TOTAL:	937.56

PER GEOTECHNICAL REPORT: 950.00 YD2

SUMMARY OF 4" CONCRETE SIDEWALK

LINE	BEG. STA.	END. STA.	LOCATION	LENGTH	WIDTH	YD2
-L-	271+30.00	288+70.00	LT	1740.00	5.00	966.67
-L-	267+50.00	273+90.00	RT	640.00	5.00	355.56
-L-	274+34.00	285+93.00	RT	1159.00	5.00	643.89
-L-	286+17.00	288+70.00	RT	253.00	5.00	140.56
					PROJECT TOTAL:	2106.67

SAY: 2150.00 YD2

COMPUTED BY:	DATE: 1/26/05
CHECKED BY:	DATE: 1/26/05

STATE OF NORTH CAROLINA
DIVISION OF HIGHWAYS

PROJECT REFERENCE NO:	SHEET NO:
R-3415	3-O

RIGHT OF WAY AREA DATA SHEET

PARCEL NO.	PROPERTY OWNERS NAME	TOTAL ACREAGE	AREA TAKEN	AREA REMAINING RIGHT	AREA REMAINING LEFT	CONSTR. EASEMENT	PERMANENT DRAINAGE EASEMENT	TEMPORARY DRAINAGE EASEMENT	EXISTING R/W
1	DAPHNIA MARTIN	171800.86 SF	2306.92 SF		14873.94 SF	1660.14 SF			
1A	ROOSEVELT L. DAVIS					3170.33 SF			
2	LOUISE OSBORNE	1.02 AC	1413.97 SF		0.99 AC	472.56 SF	174.90 SF		
3	ETTA B. KEY	30354.23 SF	1982.87 SF		28371.36 SF	380.32 SF	154.44 SF		
4	JULIS E. LANKFORD WANDA H. LANKFORD	3.86 AC.	0.04 AC	3.82 AC		0.16 AC			
5	WILLIAM J. STINSON LORI P. STINSON	23402.83 SF	975.93 SF		22426.90 SF				
6	MARY CAUDLE	20128.51 SF	1052.81 SF	19075.70 SF		815.29 SF			
7	FAIRY B. ZACH	31645.90 SF	1375.46 SF	30270.44 SF		1087.54 SF			
8	TOMMY D FREEMAN SHIRLEY E. FREEMAN	MI	5610 SF		26996.49 SF		1029.58 SF		4625 SF
9	DONALD F. LACKEY	10.10 AC	0.12 AC		9.89 AC	0.03 AC	0.01 AC		0.09 AC
10	MICHELLE GWYNN	22819.49 SF	1063.66 SF	21755.83 SF		1036.46 SF			
11	MONTGOMERY DAVIS	20124.72 SF	996.07 SF	19128.65 SF		974.19 SF			
12	MARY LOU JOHNSON	5.65 AC	0.135 AC	5.405 AC		0.06 AC			0.11 AC
13	MICHAEL & NADINE McCLUNE	1.028 AC	0.098 AC		0.93 AC	0.077 AC	0.008 AC		
14	STELLA ROBERTS	25397.31 SF	1320 SF		24077.31 SF	1633.86 SF			
15	EDWARD E. & PATRICIA TERRY	2.463 AC	0.034 AC	2.429 AC		0.025 AC		0.029 AC	
16	SAMMY DALE MARION, ESTATE	34274.19 SF	2706 SF	31568.19 SF		972.99 SF			
17	SWANIE SOUTHARD	27493.80 SF	2970 SF	24523.80 SF		918.13 SF			
18	GLEN ROBERTS	2.55 AC	0.17 AC		2.33 AC	0.12 AC			0.14 AC
19	CORNELIA COCKERHAM	28.41 AC	0.095 AC	28.37 AC		1383.99 SF			
20	VENA M. MINTON	20422.94 SF	2200 SF	16422.94 SF		988.12 SF			1800 SF
21	TROY BLEVINS	20424.66 SF	2200 SF	16423.66 SF		960.35 SF			1800 SF
22	MICKEY P. HOLCOMB	19602.00 SF	1024.02 SF	18577.98 SF		967.71 SF			
23	BECKY J. BEARD	2.81 AC	0.29 AC		2.29 AC	0.18 AC	0.25 AC		0.23 AC
24	ISLAND FORD BAPTIST CHURCH	1.26 AC	0.13 AC	1.02 AC		0.04 AC	0.004 AC		0.11 AC
25	LINDBERG & ANN SWAIM	115.36 AC	0.25 AC	115.11 AC		0.31 AC	0.06 AC	0.02 AC	
26	TRUSTEES OF ISLAND FORD BAPTIST CHURCH	2.34 AC	0.02 AC		1.97 AC	0.10 AC			0.17 AC
27	JOEL & CHERYL SMITH	1.25 AC	0.09 AC		1.09 AC	2193.20 SF			0.07 AC
28	MICHAEL & PATRICIA PHILLIPS	35283.60 SF	1879.98 SF	33403.62 SF		1873.54 SF			
29	DONALD ANDERSON	23958.00 SF	748.61 SF		23209.39 SF	2791.32 SF			
30	DAVID & KAREN KENNEDY	19.50 AC	299.95 SF		19.49 AC	.10 AC			
31	WILLIAM & MARY VANHOY	21780.00 SF	737.30 SF		21042.70 SF	3434.52 SF			
32	ANN & DANNY SWAIN	9.50 AC	0.31 AC		9.19 AC	0.68 AC	0.14 AC		
33	BARRY SWAIM	96.80 AC	0.27 AC	96.53 AC		0.43 AC	0.065 AC		
34	SLOOP & NABORS INVESTMENTS	154.33 AC	0.31 AC		154.02 AC	0.06 AC	0.03 AC		
35	PERRY MONEY	1.69 AC	0.10 AC	1.59 AC		526.24 SF	1255.21 SF		

PARCEL NO.	PROPERTY OWNERS NAME	TOTAL ACREAGE	AREA TAKEN	AREA REMAINING RIGHT	AREA REMAINING LEFT	CONSTR. EASEMENT	PERMANENT DRAINAGE EASEMENT	TEMPORARY DRAINAGE EASEMENT	EXISTING R/W
35A	GENEVA M. DAVIS	26571.60 SF	528 SF	26043.60 SF			986.00 SF		
36	JAMES T. MENDENHALL	2.40 AC	2754.68 SF	2.34 AC			986.00 SF		
37	DAN & ANNIE SWAIN	5.00 AC	0.21 AC		4.79 AC	0.49 AC			
38	LINDBERG & ANN SWAIM	103.00 AC	0.33 AC	102.67 AC		0.26 AC	0.09 AC		
39	DOROTHY E. MORRIS	22961 SF	2926 SF		17641 SF	1022.07 SF			2394 SF
40	DOROTHY C. WILLIAM	23000 SF	2310 SF		18800 SF	921.01 SF	84.34 SF		1890 SF
41	STEPHANIE & JAMIE PHILLIPS	3.25 AC	0.09 AC		3.16 AC	0.0026 AC	0.26 AC	0.019 AC	
42	DENNIS & JOAN HUTTA	5.65 AC	0.10 AC	5.55 AC			0.62 AC		
43	MICKEY P. HOLCOMB	8.26 AC	.36 AC		7.61 AC	0.06 AC	0.49 AC	0.002 AC	0.29 AC
44	TRACY & STEPHANIE MICKLES	3.86 AC	3426.83 SF	3.78 AC		0.16 AC			
45	MARY ANN FINGER	1.89 AC	2079.00 SF	1.84 AC		2291.71 SF			
46	HERMAN & RUTH BURCHAM	14.00 AC	0.16 AC		13.84 AC	0.51 AC			
47	DONALD & HELEN RUMLEY	3.40 AC	0.08 AC	3.32 AC		0.02 AC		0.05 AC	
48	HELEN T. RUMLEY & RUTH TURNER	32670.00 SF	1740.73 SF	30929.27 SF		600.78 SF		175 SF	
49	JIMPSEY D. FOWLER	5.02 AC	2010.59 SF		4.97 AC	375.76 SF			
50	MICHAEL & MARY CALLAHAN	27007.20 SF	1208.30 SF		25798.90 SF	285.39 SF			
51	ROGER & KATHERINE HODGES	30032.75 SF	2849 SF	24852.75 SF		87.37 SF			2331 SF
52	CLIFF EDWARD SHOEMAKER	35000 SF	1750.26 SF	33249.745 SF		1515.29 SF			
53	KAYLYNN W. REDFERN	1.50 AC	1203.78 SF		1.47 AC	456.56 SF			
54	JOHN & NAOMI LAMOREAUX	30056.40 SF	1500.89 SF		28555.51 SF	438.36 SF			
55	RITA B. MARTIN TRUST, FBO MICHAEL L. MARTIN	1.63 AC	0.17 AC	1.18 AC		0.04 AC			0.28 AC
56	DICKY DALE BARBER	30056.40 SF	1494.66 SF		28561.74 SF	1022.32 SF			
57	RICKIE OSBORNE	1.434 AC	0.114 AC	1.12 AC		1971.28 SF			0.20 AC
58	RITA B. MARTIN TRUST, FBO MICHAEL L. MARTIN	19602.00 SF	1000.82 SF	18601.18 SF		433.41 SF			
59	JAMES W. PARTIN	3.85 AC	4000.06 SF		3.76 AC	2471.38 SF			
60	JOSEPH BURTON	36154.80 SF	1506.12 SF	34648.68 SF		282.96 SF	835.67 SF		
61	TRUSTEES OF VICTORY BAPTIST CHURCH	6.59 AC	3318.69 SF		6.51 AC	1544.41 SF			
62	MICHAEL L. BENTON	1.82 AC	0.06 AC	1.76 AC		0.01 AC	0.03 AC		
63	ROSA E. UNDERWOOD	2.53 AC	0.10 AC	2.35 AC		0.01 AC			0.08 AC
64	J.H. & ALTA POPLIN (c/o THOMAS POPLIN)	8.03 AC	0.09 AC		7.94 AC	0.05 AC			
65	THURMOND H. RATLEDGE	16988.40 SF	893.43 SF	16094.97 SF					
66	ENNIS P. LUFFMAN	2.65 AC	0.11 AC	2.45 AC		0.017 AC			0.09 AC
67	LEONARD S. MONCUS	1.30 AC	0.04 AC	1.26 AC		0.02 AC			
68	J.A. WILLIAMS FARMS, INC	218.00 SF	0.51 AC		217.49 AC	0.01 AC	0.35 AC		0.46 AC
69	TONY & ALYCE MUNCUS	1.40 AC	0.08 AC	1.32 AC			0.16 AC		
70	MARIE VESTAL	67.00 AC	0.24 AC	66.56		0.08 AC	0.05 AC	0.02 AC	0.20 AC

COMPUTED BY:	DATE: 1/26/05
CHECKED BY:	DATE: 1/26/05

STATE OF NORTH CAROLINA
DIVISION OF HIGHWAYS

PROJECT REFERENCE NO:	SHEET NO:
R-3415	3-P

RIGHT OF WAY AREA DATA SHEET

PARCEL NO.	PROPERTY OWNERS NAME	TOTAL ACREAGE	AREA TAKEN	AREA REMAINING RIGHT	AREA REMAINING LEFT	CONSTR. EASEMENT	PERMANENT DRAINAGE EASEMENT	TEMPORARY DRAINAGE EASEMENT	EXISTING R/W
70A	DONALD & PEGGY ADAMS	1.21 AC	0.09 AC		1.12 AC	0.02 AC	0.03 AC		
71	JIMMY G. FALLIN	33976.80 SF	2898.29 SF		31078.51 SF	3189.15 SF			
72	CHARLES F. CASSTEVENS	1.41 AC	0.09 AC		1.23 AC	0.36 AC			0.09 AC
73	TOMMY & PENNY BEAVER (FORMERLY CHRISTOPHER HOLDEN)	5.32 AC	0.11 AC		5.10 AC	0.18 AC			0.11 AC
74	ALFRED & EUNICE B. MACEMORE	8.21 AC	0.66 AC	6.89 AC		0.05 AC	0.13 AC		0.66 AC
75	DONALD & BETTY GROCE	1.82 AC	0.09 AC		1.64 AC	0.04 AC			0.09 AC
76	DONALD & PEGGY ADAMS	35719.50 SF	3280 SF		29159 SF	3055.00 SF			3280 SF
77	JOHN & RHONDA WRENN	1.77 AC	0.12 AC		1.53 AC	.02 AC	0.04 AC	0.01 AC	0.12 AC
78	WALTER & NELLIE SMITH	33.40 AC	0.48 AC	32.44 AC		0.52 AC	0.07 AC	0.02 AC	0.48 AC
79	FAITH TABERNACLE CHURCH (C/O WILLIAM A. JONES)	4.64 AC	0.13 AC		4.38 AC		0.05 AC	0.39 AC	0.13 AC
80	ROMAN SALINAS	3.29 AC	0.07 AC		1.40 AC	.01 AC			
80A	BILLY JENKINS	1.82 AC	0.07 AC		1.75 AC	0.01 AC			
81	JOHNNY & KARON SHEW	24.90 AC	0.27 AC		24.37 AC	0.10 AC	0.01 AC		0.26 AC
82	KENNETH VANHOY	11.32 AC	0.60 AC	10.12 AC		0.18 AC	0.19 AC		0.60 AC
83	KENNETH & JANIE WHITLOCK	22.10 AC	0.35 AC		20.75 AC	0.29 AC	0.04 AC		0.35 AC
84	KENNETH & ANGIE VANHOY	11.39 AC	0.46 AC		10.40 AC	0.48 AC	0.24 AC		0.53 AC
85	SANDRA HARRIS	4.0 AC	0.04 AC	3.96 AC		0.14 AC			
86	THOMAS M. POPLIN	8.24 AC	0.30 AC	7.64 AC		0.25 AC	0.20 AC	0.01 AC	0.30 AC
87	WALTER & JOAN BROWN	1.30 AC	0.32 AC		0.66 AC	0.25 AC	0.14 AC	0.001 AC	0.32 AC
88	DALE & LYNN ROSE & FOY DEAN DAVIS	107.72 AC	1.38 AC		104.96 AC	0.55 AC	0.38 AC	0.06 AC	1.38 AC
89	LINDA S. JOHNSON,ORRIN D. SHAW, JR.,STEVEN F. BRYANT,DEBRA M. BRYANT,JAY S.	18.00 AC	0.69 AC		16.62 AC	0.27 AC			0.69 AC
90	JUANITA BRYANT, ETAL	140.63 AC	2.35 AC	135.5 AC	0.43 AC	0.51 AC	0.26 AC	0.19 AC	2.35 AC
91	JAMES KNIGHT & AMY KNIGHT	4.35 AC	0.23 AC		3.89 AC	0.03 AC	.04 AC		0.23 AC
92	ELIZABETH S. REECE	5.00 AC	0.14 AC	4.86 AC		0.04 AC	0.03 AC		0.14 AC
93	LARRY WHITT,JAMES KNIGHT, AND AMY KNIGHT	75.05 AC	1.50 AC	8.90 AC	63.23 AC	0.42 AC	0.68 AC		1.42 AC
94	PHYLLIS B. CURRENT	1.57 AC	0.07 AC		1.44 AC	0.07 AC			0.06 AC
95	NANCY C. WOOTEN,BILLY COLLINS, AND THOMAS COLLINS, JR.	43.00 AC	0.28 AC	42.72 AC		0.11 AC	0.13 AC		0.29 AC
96	ROBERT LAWSON	1.52 AC	0.13 AC		1.26 AC	0.32 AC			0.13 AC
97	VAUGHAN BASSETT FURNITURE COMPANY	47.46 AC	0.32 AC		46.82 AC	0.02 AC	0.22 AC		0.32 AC
98	JOHN & RUTH COLLINS	16.00 AC	0.71 AC	14.58 AC		0.31 AC	0.12 AC		0.71 AC
99	NED H. REECE	43124.40 SF	2250 SF		40874 SF	874.82 SF	2624.56 SF		
100	WAYNE KING (SANDRA O. KING L/E)	20910 SF	1000 SF		19910 SF	1152.31 SF			
101	BRONCO-YAR DEVELOMENT	4.55 AC	0.21 AC		4.13 AC	0.08 AC			0.21 AC
101A	BRONCO-YAR DEVELOMENT	4.23 AC	0.42 AC		3.39 AC	0.10 AC			0.42 AC
102	EVAN W. VESTAL	1.30 AC	0.12 AC		1.07 AC	0.04 AC			0.11 AC

PARCEL NO.	PROPERTY OWNERS NAME	TOTAL ACREAGE	AREA TAKEN	AREA REMAINING RIGHT	AREA REMAINING LEFT	CONSTR. EASEMENT	PERMANENT DRAINAGE EASEMENT	TEMPORARY DRAINAGE EASEMENT	EXISTING R/W
103	RALPH D. LINVILLE	35719 SF	3600 SF	28519 SF		1551.25 SF	127.82 SF		3600 SF
104	WINNIE A. TOMLIN	8.57 AC	0.22 AC	8.13 AC		0.04 AC	0.06 AC		0.22 AC
106	JOHN H. SHEPARD	56.02 AC	0.22 AC		55.80 AC	0.04 AC	0.05 AC		0.27 AC
107	JOHNNY G. SIZEMORE	35256 SF	2100 SF	31056 SF		48.00 SF	2834.27 SF		2100 SF
108	VERLE D. EVANS	19166.40 SF	1472 SF	16222 SF		337.42 SF	1665.75 SF		1472 SF
109	LINDA & GLEN OAKES	19602.00 SF	1466 SF	16670 SF		282.22 SF			1466 SF
110	DOROTHY H. CREWS	15681.60 SF	512.66 SF	14656 SF		114.97 SF			513 SF
111	LILLIE ANN TAYLOR	8350 SF	871 SF	6608 SF		43.62 SF			871 SF
112	THOMAS & LORI MASKE	13939 SF	1504 SF	10931 SF		1.2 SF			1504 SF
113	RAYMOND D. NANCE	14150 SF	2178 SF	9794 SF					2178 SF
114	DAVID & BARBARA WILLIAMS	30927.60 SF	2600 SF	25728 SF					2600 SF
115	JOHNNY G. SIZEMORE	1.13 AC	0.08 AC		0.95 AC	0.01 AC			0.10 AC
116	BOONVILLE ASSOC.	2.82 AC	0.06 AC	2.70 AC					0.06 AC
117	DAVID R. MANN	37026.00 SF	1243.38 SF	35782.62 SF					
118	BONNIE M. FLETCHER	37461.60 SF	1154.95 SF	36307.65 SF					
119	JOE & ELLEN REECE	23.20 AC	0.09 AC		23.11 AC	0.02 AC	0.05 AC		0.09 AC
120	ROY W. WOOD	22651 SF	1000 SF	20651 SF		11.74 SF			1000 SF
121	WILLIAM J. DOBBINS	19602.00 SF	1193.78 SF	18408.22 SF		206.52 SF			
122	ELIZABETH S. REECE	27.00 AC	0.11 AC	26.78 AC		0.01 AC	0.01 AC		0.11 AC
123	ELLEN LEE HOLLYFIELD	23086.80 SF	1700 SF		19687 SF	1581.85 SF	597.17 SF		1700 SF
124	BARBARA D. ADAMS, ETAL	4.30 AC	0.03 AC		4.28 AC	0.03 AC			0.02 AC
125	ORION PROPERTIES	10019 SF	2400 SF		5219 SF	1037.85 SF			2400 SF
126	ELIZABETH S. REECE	1.00 AC	0.12 AC	0.78 AC					0.10 AC
127	JACKIE & LINDA CRISSMAN	23086.80 SF	2254.86 SF	18833 SF					2000 SF
128	IMOGENE COMBS	30000 SF	1000 SF		29000 SF	120.15 SF			
129	MOCK'S PLACE, INC.	3.13 AC	0.09 AC		3.04 AC				0.09 AC
130	GERALD & CARMIN BROWN	1.58 AC	0.09 AC	1.49 AC					
131	ELIZABETH F. SHORE	19166 SF	1307 SF		17859 SF				

PROJ. REFERENCE NO.	SHEET NO.
R-3415	3-Q

STATE OF NORTH CAROLINA
DIVISION OF HIGHWAYS

PARCEL INDEX SHEET

PARCEL No.	SHEET No.	PROPERTY OWNER NAME
1	4	DAPHNIA MARTIN
1A	4	ROOSEVELT L. DAVIS
2	4	LOUISE OSBORNE
3	4	ETTA B. KEY
4	4	JULIS E. LANKFORD WANDA H. LANKFORD
5	4	WILLIAM J. STINSON LORI P. STINSON
6	4	MARY CAUDLE
7	4	FAIRY B. ZACH
8	4	TOMMY D FREEMAN SHIRLEY E. FREEMAN
9	4,5	DONALD F. LACKEY
10	4	MICHELLE D. GWYNN
11	4	MONTGOMERY DAVIS
12	4,5	MARY LOU JOHNSON
13	5	MICHAEL & NADINE McCLUNE
14	5	STELLA ROBERTS
15	5	EDWARD E. & PATRICIA TERRY
16	5	SAMMY DALE MARION, ESTATE
17	5	SWANIE SOUTHARD
18	5	GLEN ROBERTS
19	5	CORNELIA COCKERHAM
20	5	VENA M. MINTON
21	5	TROY BLEVINS
22	5	MICKEY P. HOLCOMB
23	5	BECKY J. BEARD
24	5	ISLAND FORD BAPTIST CHURCH
25	5,6	LINDBERG & ANN SWAIM
26	5,6	TRUSTEES OF ISLAND FORD BAPTIST CHURCH
27	6	JOEL & CHERYL SMITH
28	6	MICHAEL & PATRICIA PHILLIPS
29	6	DONALD ANDERSON
30	6	DAVID & KAREN KENNEDY
31	6	WILLIAM & MARY VANHOY
32	6,7	ANN & DANNY SWAIN
33	6,7	BARRY SWAIM
34	7	SLOOP & NABORS INVESTMENTS
35	7	PERRY C MONEY
35A	7	GENEVA M. DAVIS
36	7,8	JAMES A. MENDENHALL
37	7,8	DAN & ANN SWAIN
38	8,9	LINDBERG & ANN SWAIM
39	8	DOROTHY E. MORRIS
40	8	DOROTHY C. WILLIAMS
41	8,9	STEPHANIE & JAMIE PHILLIPS
42	9	DENNIS & JOAN HUTTA
43	9	MICKEY P. HOLCOMB
44	9	TRACY & STEPHANIE MICKLES
45	9	MARY ANN FINGER
46	9,10	HERMAN & RUTH BURCHAM
47	9,10	DONALD & HELEN RUMLEY
48	10	HELEN T. RUMLEY & RUTH TURNER
49	10	JIMPSEY D. FOWLER
50	10	MICHAEL & MARY CALLAHAN
51	10	ROGER & KATHERINE HODGES
52	10	CLIFF EDWARD SHOEMAKER
53	10	KAYLYNN REDFERN
54	10	JOHN & NAOMI LAMOREAUX
55	10	RITA B. MARTIN TRUST FBO MICHEAL L. MARTIN
56	10	DICKY DALE BARBER
57	10	RICKIE OSBORNE
58	10	RITA B. MARTIN TRUST FBO MICHEAL L. MARTIN

PARCEL No.	SHEET No.	PROPERTY OWNER NAME
59	10,11	JAMES W. PARTIN
60	10,11	JOSEPH BURTON
61	11	TRUSTEES OF VICTORY BAPTIST CHURCH
62	11	MICHAEL L. BENTON
63	11	ROSA E. UNDERWOOD
64	11	J.H. & ALTA POPLIN (c/o THOMAS POPLIN)
65	11	THURMOND H. RATLEDGE
66	11	CECIL LUFFMAN (DECEASED) & WIFE ENNIS P. LUFFMAN
67	11	LARRY KENT MUNCUS
68	11,12	J.A. WILLIAMS FARMS, INC
69	12	ALYCE MUNCUS & TERRY KESLER
70	12	T.H. & MARIE VESTAL
70A	12	DONALD & PEGGY ADAMS
71	12	JIMMY G. FALLIN
72	12	CHARLES F. CASSTEVENS
73	12,13	TOMMY & PENNY BEAVER (FORMERLY CHRISTOPHER HOLDEN)
74	12,13	EUNICE B. MACEMORE
75	13	DONALD & BETTY GROCE
76	13	DONALD & PEGGY ADAMS
77	13	JOHN & RHONDA WRENN
78	13,14	WALTER & NELLIE SMITH
79	13	FAITH TABERNACLE APOSTOLIC CHURCH, INC (C/O WILLIAM A. JONES)
80	13	ROMAN SALINAS
80A	13,14	BILLY JENKINS
81	14	JOHNNY & KARON SHEW
82	14,15	KENNETH VANHOY
83	14	KENNETH & JANIE WHITLOCK
84	14,15	KENNETH & ANGIE VANHOY
85	15	SANDRA HARRIS
86	15	THOMAS M. POPLIN
87	15	WALTER & JOAN BROWN
88	15,16,17,18	DALE & LYNN ROSE & FOY DEAN DAVIS
89	18,19	LINDA S. JOHNSON,
90	15,16,17,18	JUANITA BRYANT, et al
91	19	JAMES KNIGHT & AMY KNIGHT
92	19	ROY W. REECE
93	19,20	LARRY WHITT,JAMES KNIGHT, AND AMY KNIGHT
94	20,21	PHYLLIS B. CURRENT
95	21	NANCY C. WOOTEN,BILLY COLLINS, AND THOMAS COLLINS, JR.
97	21	VAUGHAN BASSETT FURNITURE COMPANY
98	21,22	JOHN & RUTH COLLINS
99	21	NED H. REECE
100	21,22	WAYNE KING (SANDRA O. KING L/E)
101	22	BRONCO-YAR DEVELOMENT
101A	22,23	BRONCO-YAR DEVELOPMENT
102	22	EVAN W. VESTAL
103	22	RALPH D. LINVILLE
104	22,23	WINNIE A. TOMLIN
106	23	JOHN H. SHEPARD, ET AL
107	23	JOHNNY G. ANDERSON
108	23	VERLE D. EVANS
109	23	LINDA & GLENN OAKES
110	23	DOROTHY H. CREWS
111	23	LILLIE ANN TAYLOR
112	23	THOMAS & LORI MASKE
113	23	RAYMOND D. NANCE
114	23	DAVID & BARBARA WILLIAMS
115	23	JOHNNY G. SIZEMORE
116	23	BOONVILLE ASSOC.
117	23	DAVID R. MANN

PROJ. REFERENCE NO.	SHEET NO.
R-3415	3-R

STATE OF NORTH CAROLINA
DIVISION OF HIGHWAYS

PARCEL INDEX SHEET

PARCEL No.	SHEET No.	PROPERTY OWNER NAME
118	23	BONNIE M. FLETCHER
119	23,24	JOE & ELLEN REECE
120	24	ROY W. WOOD
121	24	WILLIAM J. DOBBINS
122	24	ROY W. REECE & OTHERS
123	24	ELLEN LEE HOLLYFIELD
124	24	BARBARA D. ADAMS, ET AL
125	24	ORION PROPERTIES
126	24	ELIZABETH S. REECE
127	24	JACKIE & LINDA CRISSMAN
128	24	IMOGENE. COMBS
129	24	MOCK'S PLACE INC
130	24	GERALD & CARMEN BEOWN
131	24	ELIZABETH F. SHORE

PARCEL No.	SHEET No.	PROPERTY OWNER NAME

PROJECT REFERENCE NO.	SHEET NO.
R-3415	4
R/W SHEET NO.	
ROADWAY DESIGN ENGINEER	HYDRAULICS ENGINEER

NORTH CAROLINA PROFESSIONAL SEAL 028951 ENGINEER JOSEPH L. LAWS 1/27/05

NORTH CAROLINA PROFESSIONAL SEAL 14675 ENGINEER PAUL F. FISHER 5/2/06

NOTE

FOR -L- PROFILE SEE SHEET 25
FOR -Y- PROFILE SEE SHEET 35
ALL DRIVEWAY RADII ARE 15' UNLESS NOTED

DETAIL 2A
LATERAL 'V' DITCH
(Not to Scale)

Natural Ground, PSRM, Fill Slope, Min. D = 1.5 Ft., Max. d = 1.0 Ft., b = 5.0 Ft.
Type of Liner = PSRM

FROM STA. 19+50 TO 20+43 -L- LT
EST. 25 S.Y. PSRM
EST. DDE= 7 C.Y.

DETAIL 10
SPECIAL CUT DITCH
(Not to Scale)

Natural Ground, Front Ditch Slope, Min. D = 1.0 Ft.

FROM STA. 19+50 TO 20+00 -L- LT

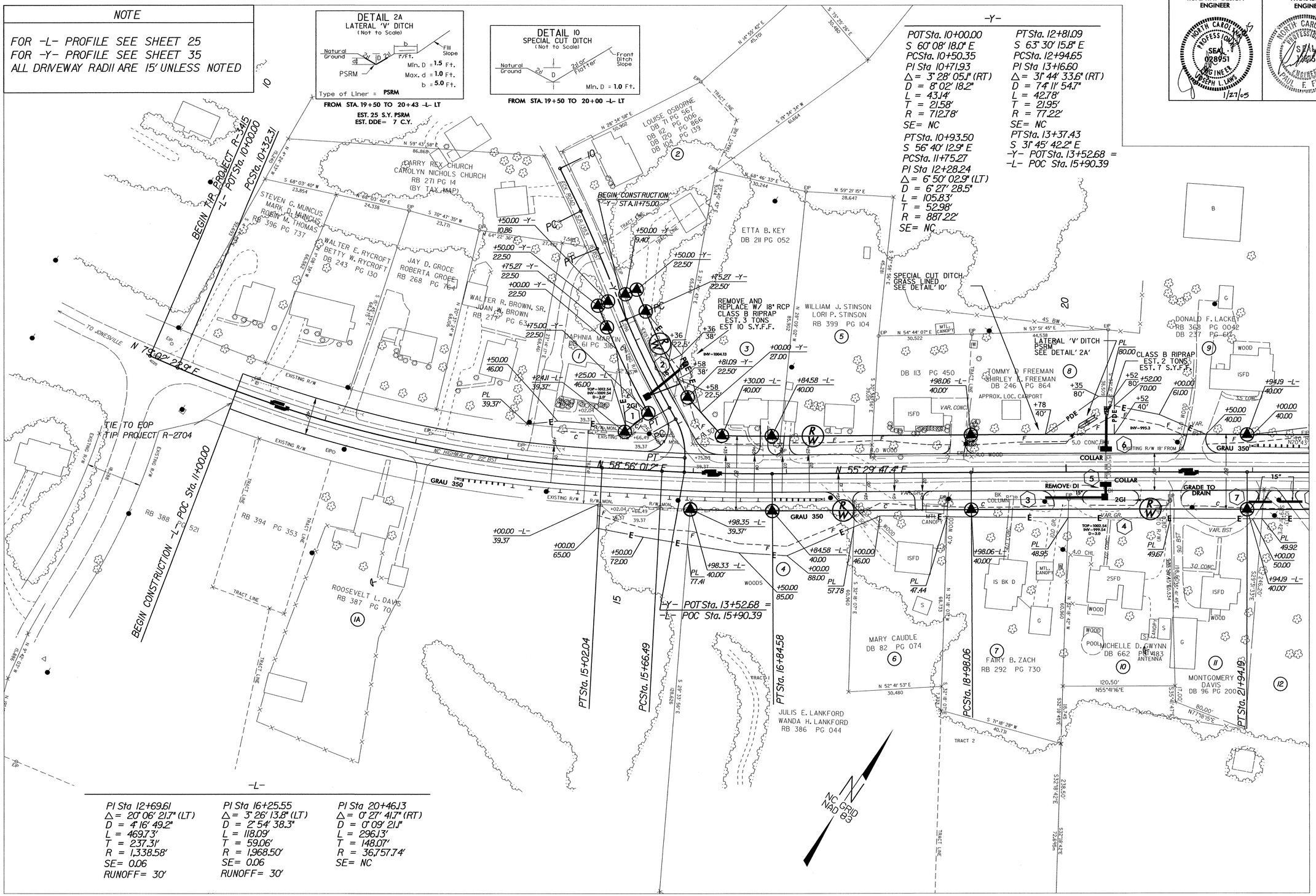

-Y-

POT Sta. 10+00.00
S 60° 08' 18.0" E
PCSta. 10+50.35
PI Sta 10+71.93
Δ = 3° 28' 05.1" (RT)
D = 8° 02' 18.2"
L = 43.14'
T = 21.58'
R = 712.78'
SE= NC

PT Sta. 10+93.50
S 56° 40' 12.9" E
PCSta. 11+75.27
PI Sta 12+28.24
Δ = 6° 50' 02.9" (LT)
D = 6° 27' 28.5"
L = 105.83'
T = 52.98'
R = 887.22'
SE= NC

PT Sta. 12+81.09
S 63° 30' 15.8" E
PCSta. 12+94.65
PI Sta 13+16.60
Δ = 31° 44' 33.6" (RT)
D = 74° 11' 54.7"
L = 42.78'
T = 21.95'
R = 77.22'
SE= NC

PT Sta. 13+37.43
S 31° 45' 42.2" E
-Y- POT Sta. 13+52.68 =
-L- POC Sta. 15+90.39

-L-

PI Sta 12+69.61
Δ = 20° 06' 21.7" (LT)
D = 4° 16' 49.2"
L = 469.73'
T = 237.31'
R = 1,338.58'
SE= 0.06
RUNOFF= 30'

PI Sta 16+25.55
Δ = 3° 26' 13.8" (LT)
D = 2° 54' 38.3"
L = 118.09'
T = 59.06'
R = 1,968.50'
SE= 0.06
RUNOFF= 30'

PI Sta 20+46.13
Δ = 0° 27' 41.7" (RT)
D = 0° 09' 21.1"
L = 296.13'
T = 148.07'
R = 36,757.74'
SE= NC

8/17/99

26-JAN-2005 10:55
C:\rdy\r-3415\r3415ps04.psh
rashaw AT

PROJECT REFERENCE NO.	SHEET NO.
R-3415	5
R/W SHEET NO.	
ROADWAY DESIGN ENGINEER	HYDRAULICS ENGINEER

NORTH CAROLINA PROFESSIONAL SEAL 028951 ENGINEER JOSEPH L. LAWS 1/27/05

NORTH CAROLINA PROFESSIONAL SEAL 12575 ENGINEER PAUL F. FISHER 5/2/06

NOTE

FOR -L- PROFILE SEE SHEETS 25,26
ALL DRIVEWAY RADII ARE 15' UNLESS NOTED

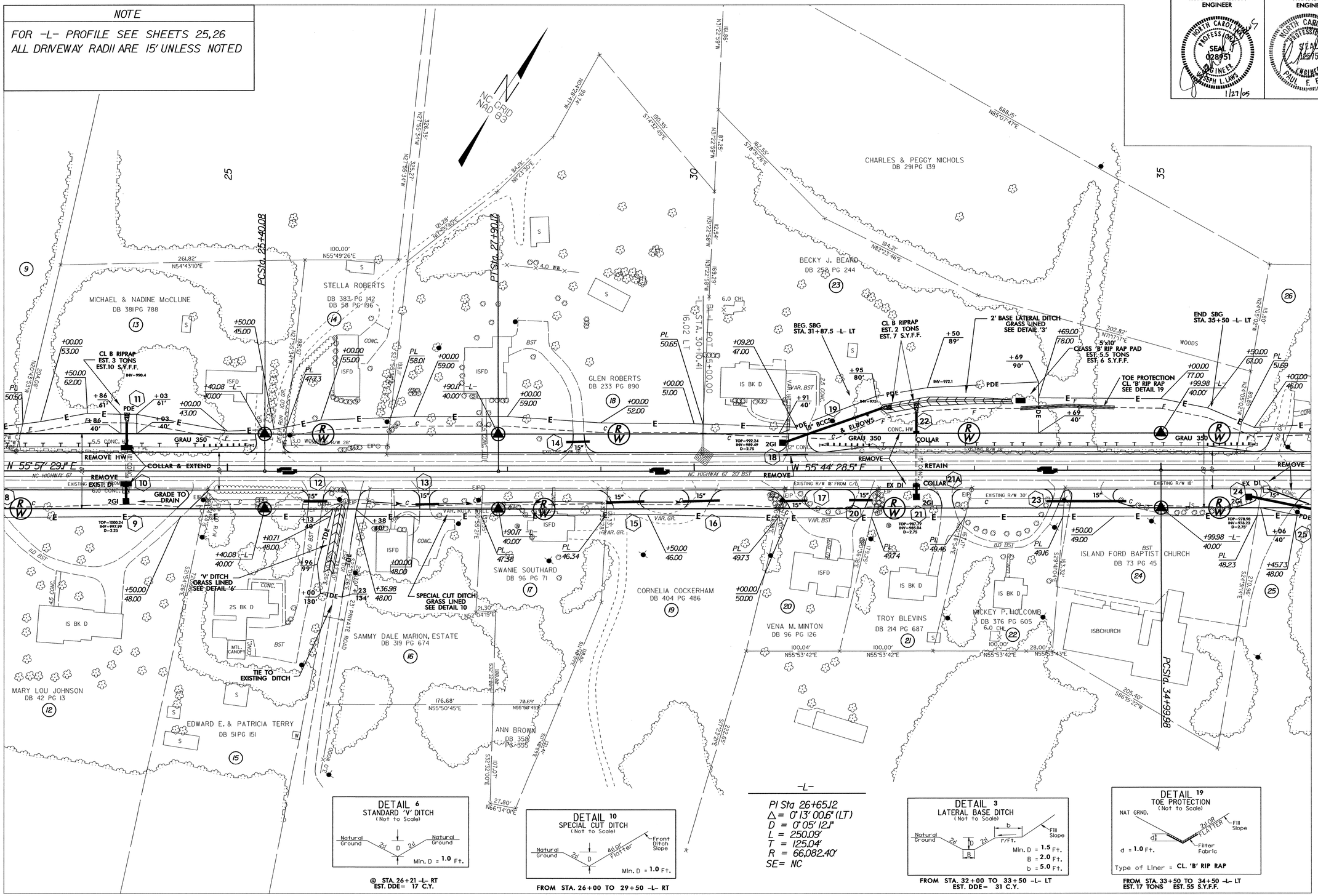

-L-

PI Sta 26+65.12
Δ = 0° 13' 00.6" (LT)
D = 0° 05' 12.1"
L = 250.09'
T = 125.04'
R = 66,082.40'
SE = NC

DETAIL 6
STANDARD 'V' DITCH
(Not to Scale)
Natural Ground 2:1 D 2:1 Natural Ground
Min. D = 1.0 Ft.
@ STA. 26+21 -L- RT
EST. DDE = 17 C.Y.

DETAIL 10
SPECIAL CUT DITCH
(Not to Scale)
Natural Ground 2:1 D 4:1 or Flatter Front Ditch Slope
Min. D = 1.0 Ft.
FROM STA. 26+00 TO 29+50 -L- RT

DETAIL 3
LATERAL BASE DITCH
(Not to Scale)
Natural Ground 2:1 D 2:1 b 1'/Ft. Fill Slope
Min. D = 1.5 Ft.
B = 2.0 Ft.
b = 5.0 Ft.
FROM STA. 32+00 TO 33+50 -L- LT
EST. DDE = 31 C.Y.

DETAIL 19
TOE PROTECTION
(Not to Scale)
NAT GRND. 2:1 OR FLATTER Fill Slope d Filter Fabric
d = 1.0 Ft.
Type of Liner = CL. 'B' RIP RAP
FROM STA. 33+50 TO 34+50 -L- LT
EST. 17 TONS EST. 55 S.Y.F.F.

8/17/99

26-JAN-2005 11:06
C:\rdy\r-3415\r3415ps05.psh
rashaw AT

PROJECT REFERENCE NO.	SHEET NO.
R-3415	6
R/W SHEET NO.	
ROADWAY DESIGN ENGINEER	HYDRAULICS ENGINEER

NORTH CAROLINA PROFESSIONAL SEAL 028951 ENGINEER JOSEPH L. LANE 1/27/05

NORTH CAROLINA PROFESSIONAL SEAL 19575 ENGINEER PAUL F. FISHER 5/2/06

NOTE

FOR -L- PROFILE SEE SHEET 26
FOR -DI- PROFILE SEE SHEET 38
ALL DRIVEWAY RADII ARE 15' UNLESS NOTED

DETAIL 7
STANDARD 'V' DITCH
(Not to Scale)

Natural Ground, 2:1, D, 2:1, Natural Ground; d; Filter Fabric

Min. D = 1.0 Ft.
Max. d = 1.0 Ft.

Type of Liner = CL. 'B' RIP RAP

@ STA. 44+90 -L- RT
EST DDE= 9 C.Y.
EST. 5 TONS EST. 10 S.Y.F.F.

-DI-

POT Sta. 10+00.00
S 23° 50' 56.9" E
PC Sta. 11+36.42
PI Sta 11+59.78
Δ = 10° 15' 52.5" (LT)
D = 22° 02' 12.6"
L = 46.58'
T = 23.35'
R = 260.00'
PT Sta. 11+83.00
S 34° 06' 49.4" E
POT Sta. 11+89.61
-DI- POT Sta. 11+89.61 =
-L- POT Sta. 42+61.35

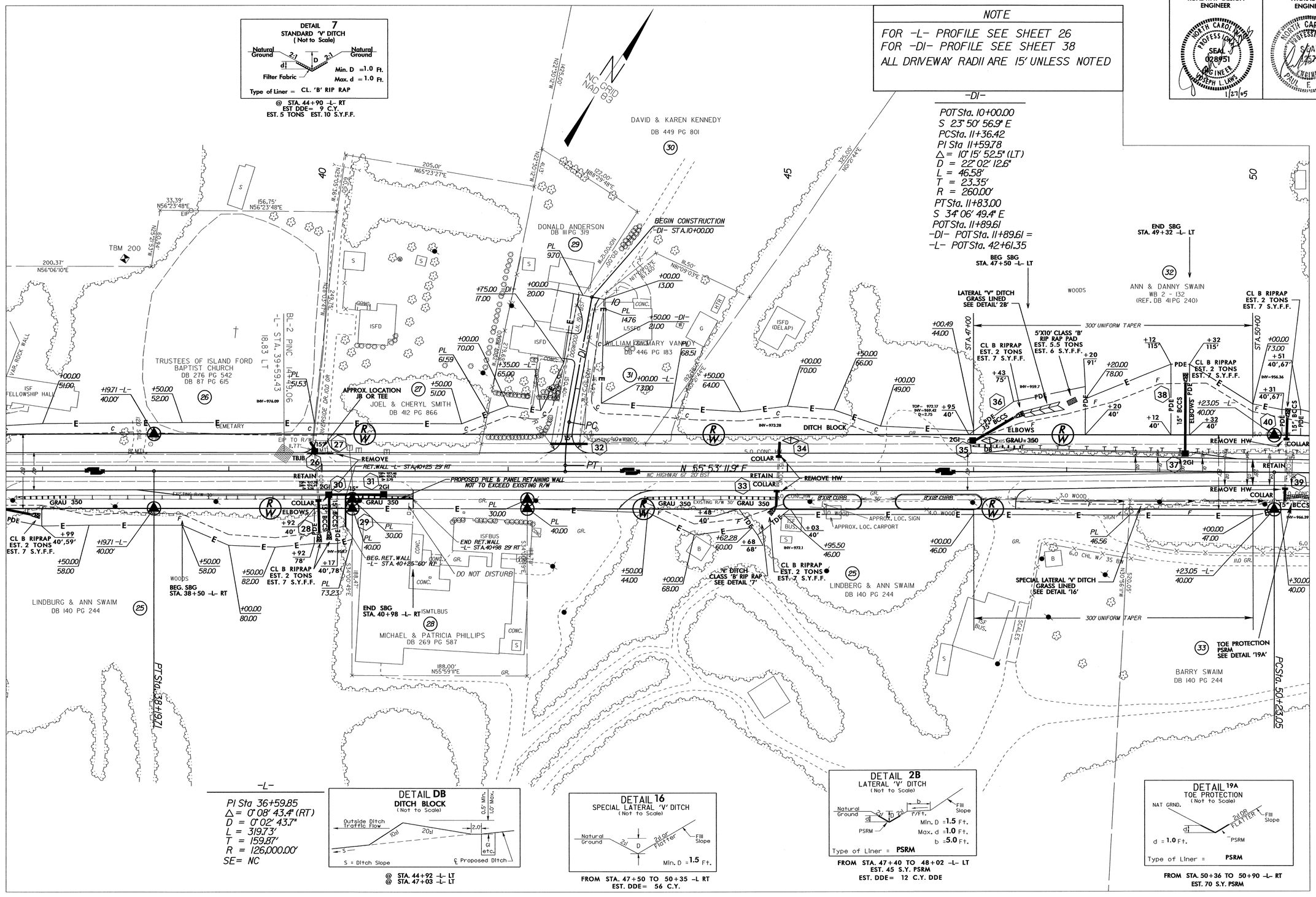

-L-

PI Sta 36+59.85
Δ = 0° 08' 43.4" (RT)
D = 0° 02' 43.7"
L = 319.73'
T = 159.87'
R = 126,000.00'
SE= NC

DETAIL DB
DITCH BLOCK
(Not to Scale)

Outside Ditch Traffic Flow; 10d; 20d; 2.0; 0.5' Min. 1.0' Max.; GI etc.; S = Ditch Slope; ℄ Proposed Ditch

@ STA. 44+92 -L- LT
@ STA. 47+03 -L- LT

DETAIL 16
SPECIAL LATERAL 'V' DITCH
(Not to Scale)

Natural Ground, 2:1, D, 2:1 or Flatter, Fill Slope

Min. D = 1.5 Ft.

FROM STA. 47+50 TO 50+35 -L- RT
EST. DDE= 56 C.Y.

DETAIL 2B
LATERAL 'V' DITCH
(Not to Scale)

Natural Ground, 2:1 To 2:1, b, 1'/Ft., Fill Slope, PSRM

Min. D = 1.5 Ft.
Max. d = 1.0 Ft.
b = 5.0 Ft.

Type of Liner = PSRM

FROM STA. 47+40 TO 48+02 -L- LT
EST. 45 S.Y. PSRM
EST. DDE= 12 C.Y. DDE

DETAIL 19A
TOE PROTECTION
(Not to Scale)

NAT GRND.; d; 2:1 OR FLATTER; Fill Slope; PSRM

d = 1.0 Ft.

Type of Liner = PSRM

FROM STA. 50+36 TO 50+90 -L- RT
EST. 70 S.Y. PSRM

8/17/99

26-JAN-2005 14:14
cadd_user
R-3415_AT_3415ps06.psh
rashaw

PROJECT REFERENCE NO.	SHEET NO.
R-3415	7
R/W SHEET NO.	
ROADWAY DESIGN ENGINEER	HYDRAULICS ENGINEER

NORTH CAROLINA PROFESSIONAL SEAL 028951 ENGINEER JOSEPH L. LAWS 4/20/2006

NORTH CAROLINA PROFESSIONAL SEAL 14535 ENGINEER PAUL F. FISHER 3/2/06

NOTE

FOR -L- PROFILE SEE SHEET 26
ALL DRIVEWAY RADII ARE 15' UNLESS NOTED

DETAIL 7A
STANDARD 'V' DITCH
(Not to Scale)

Natural Ground, 2:1, D, d, 2:1, Natural Ground; Filter Fabric

Min. D = 1.5 Ft.
Max. d = 1.0 Ft.
Type of Liner = CL. 'B' RIP RAP

@ STA. 61+80 -L- RT
EST. 10 TONS EST. 27 S.Y.F.F.
EST DDE= 43 C.Y.

DETAIL 4
LATERAL BASE DITCH
(Not to Scale)

Natural Ground, 2:1, D, d, 2:1, 1'Ft., b, Fill Slope, B, Filter Fabric

Min. D = 1.5 Ft.
Max. d = 1.0 Ft.
B = 2.0 Ft.
b = 5.0 Ft.
* When B is< 6.0'
Type of Liner = CL. 'B' RIP RAP

FROM STA. 61+00 TO 61+85 -L- LT
EST. 30 TONS EST. 57 S.Y.F.F.
EST DDE= 19 C.Y.

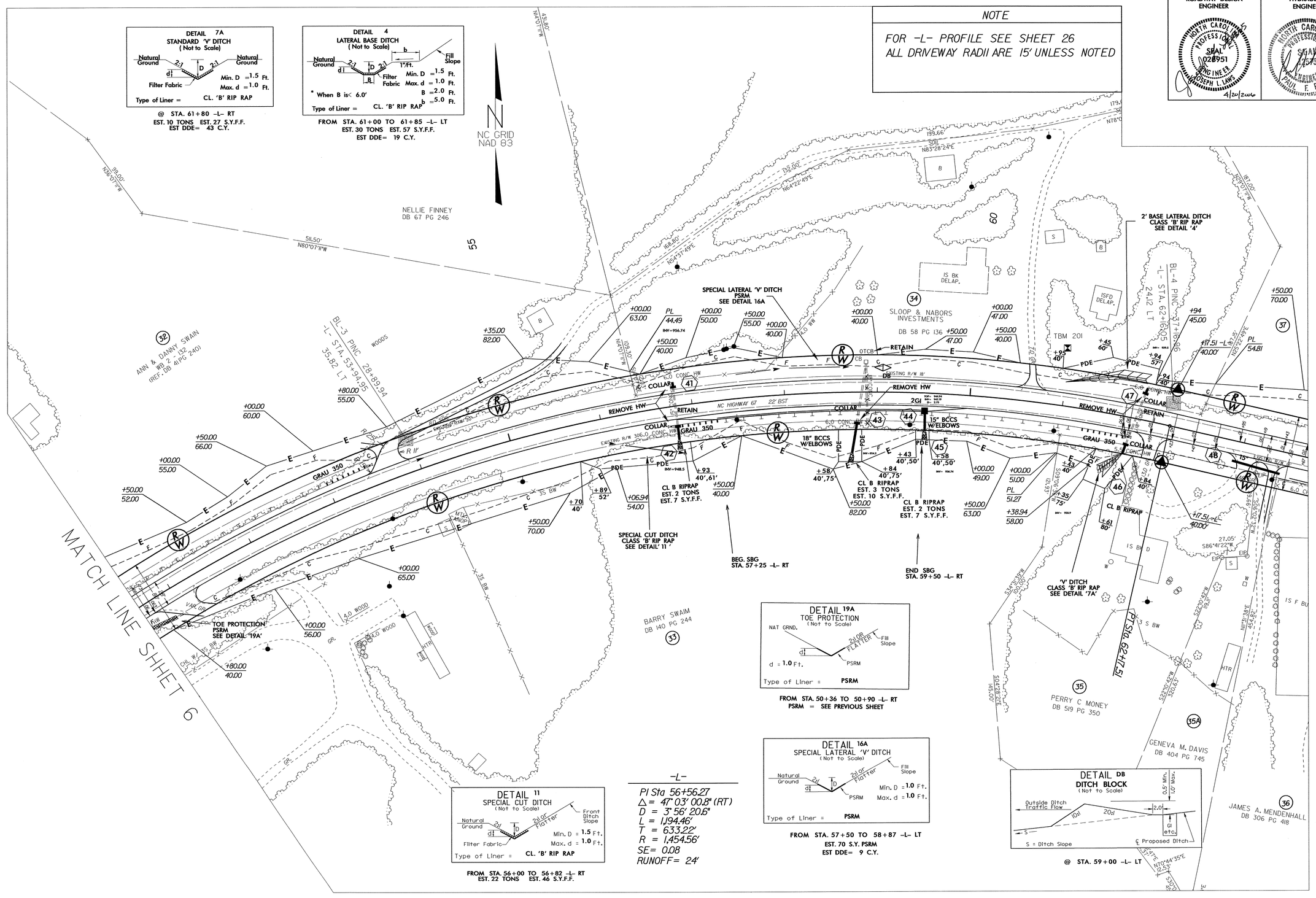

DETAIL 19A
TOE PROTECTION
(Not to Scale)

NAT GRND., d, 2:1 OR FLATTER, Fill Slope, PSRM

d = 1.0 Ft.
Type of Liner = PSRM

FROM STA. 50+36 TO 50+90 -L- RT
PSRM = SEE PREVIOUS SHEET

DETAIL 11
SPECIAL CUT DITCH
(Not to Scale)

Natural Ground, 2H, D, d, 2:1 or Flatter, Front Ditch Slope, Filter Fabric

Min. D = 1.5 Ft.
Max. d = 1.0 Ft.
Type of Liner = CL. 'B' RIP RAP

FROM STA. 56+00 TO 56+82 -L- RT
EST. 22 TONS EST. 46 S.Y.F.F.

DETAIL 16A
SPECIAL LATERAL 'V' DITCH
(Not to Scale)

Natural Ground, 2H, D, d, 2:1 or Flatter, Fill Slope, PSRM

Min. D = 1.0 Ft.
Max. d = 1.0 Ft.
Type of Liner = PSRM

FROM STA. 57+50 TO 58+87 -L- LT
EST. 70 S.Y. PSRM
EST DDE= 9 C.Y.

DETAIL DB
DITCH BLOCK
(Not to Scale)

0.5' Min., 1.0' Max., Outside Ditch Traffic Flow, 10d, 20d, 2.0', GI etc., S = Ditch Slope, ℄ Proposed Ditch

@ STA. 59+00 -L- LT

8/17/99

19-APR-2006 14:55
C:\pw_work\14535\r3415ps07.psh
cashaw at DIICAD-224782

PROJECT REFERENCE NO.	SHEET NO.
R-3415	8
R/W SHEET NO.	
ROADWAY DESIGN ENGINEER	HYDRAULICS ENGINEER
NORTH CAROLINA PROFESSIONAL ENGINEER SEAL 028951 JOSEPH L. LAWS 1/27/05	NORTH CAROLINA PROFESSIONAL ENGINEER SEAL 025575 PAUL F. FISHER 5/2/06

NOTE

FOR -L- PROFILE SEE SHEETS 26,27
ALL DRIVEWAY RADII ARE 15' UNLESS NOTED

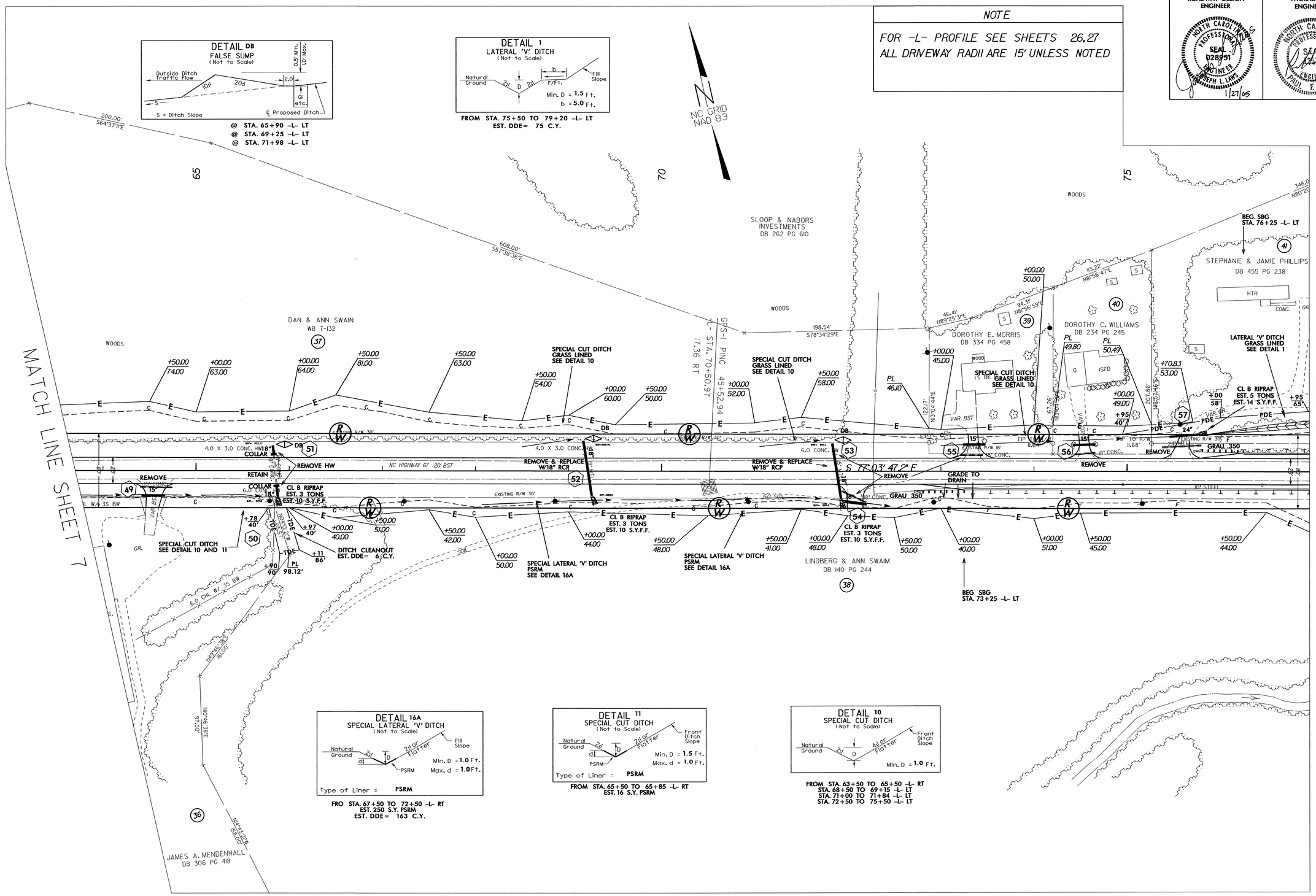

8/17/99

26-JAN-2005 14:24
cv-dgn r3415ps08.dgn
rashaw

PROJECT REFERENCE NO.	SHEET NO.
R-3415	9
R/W SHEET NO.	
ROADWAY DESIGN ENGINEER	HYDRAULICS ENGINEER

NORTH CAROLINA PROFESSIONAL SEAL 028951 ENGINEER JOSEPH L. LAWS 4/20/2006

NORTH CAROLINA PROFESSIONAL SEAL 19415 ENGINEER PAUL F. FISHER 5/2/06

NOTE

FOR -L- PROFILE SEE SHEETS 27,28

ALL DRIVEWAY RADII ARE 15' UNLESS NOTED

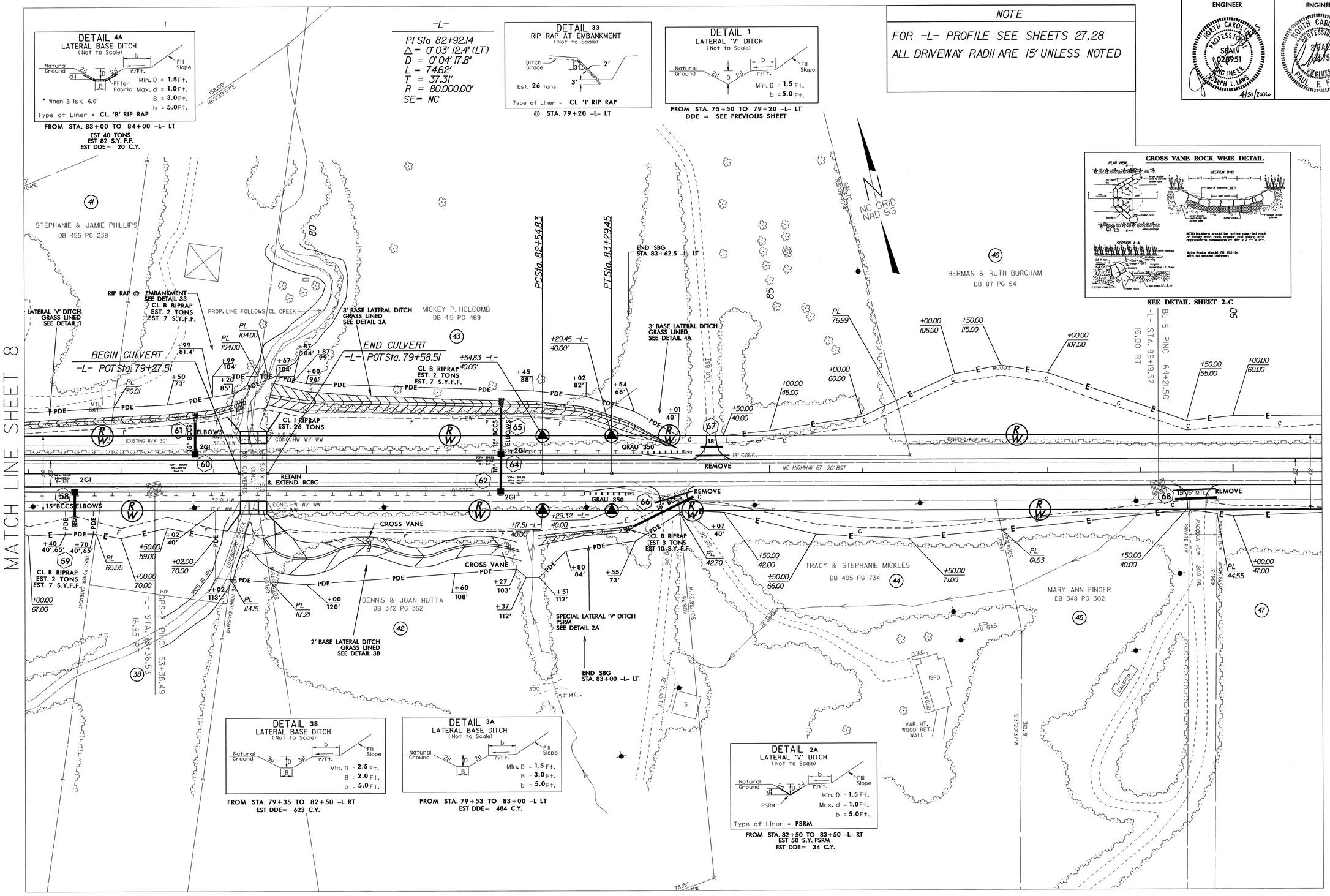

8/17/99

19-APR-2006 14:55
c:\pw_work\jlaws\d0415ap09.pgh
pshfil1 ATI DILCAD:224782

PROJECT REFERENCE NO.	SHEET NO.
R-3415	10
R/W SHEET NO.	
ROADWAY DESIGN ENGINEER	HYDRAULICS ENGINEER

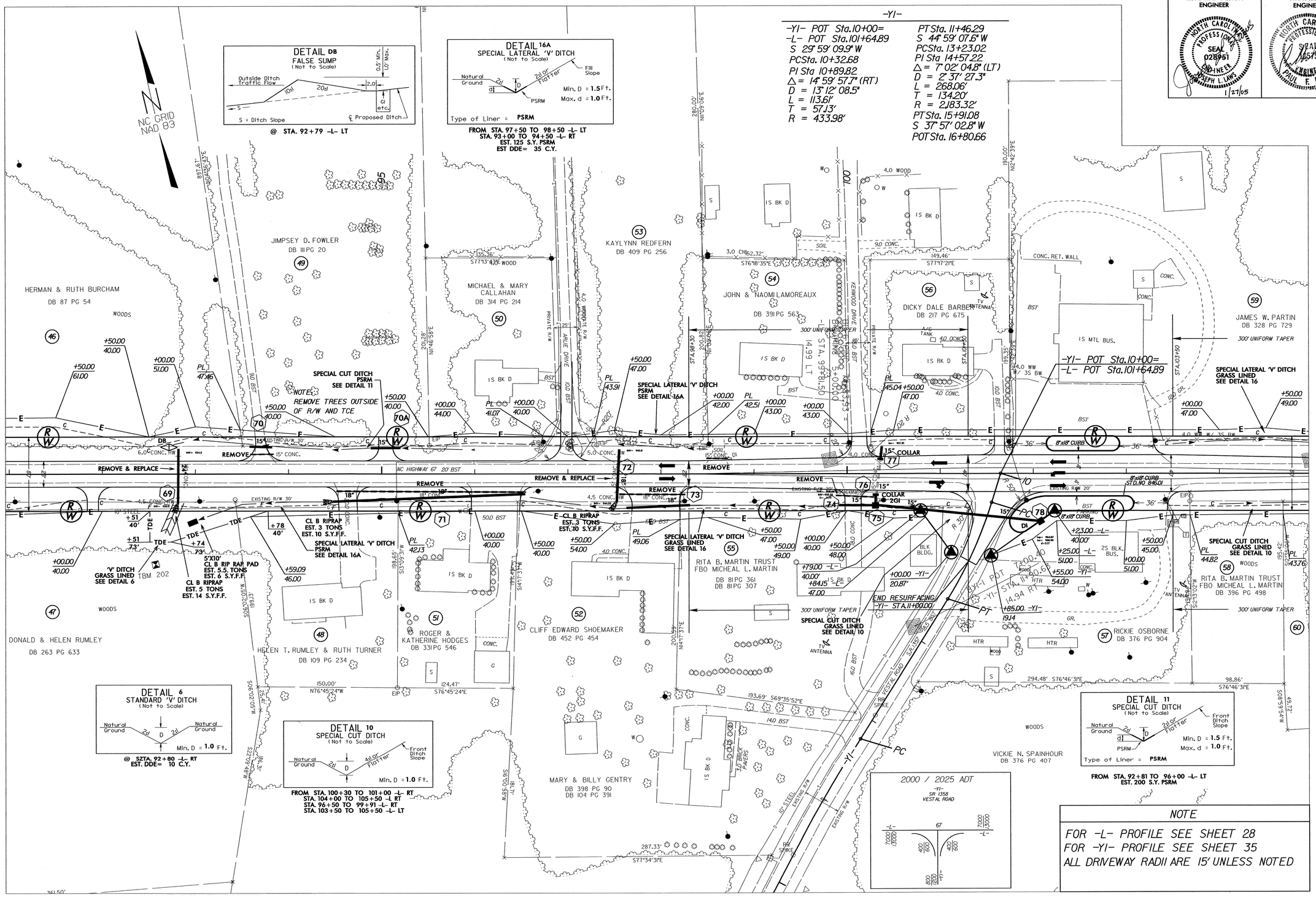

NOTE

FOR -L- PROFILE SEE SHEET 28
FOR -Y1- PROFILE SEE SHEET 35
ALL DRIVEWAY RADII ARE 15' UNLESS NOTED

8/17/99

26-JAN-2005 16:25
c:\rdj\r-3415\r3415ps10.psh
rashaw AT

PROJECT REFERENCE NO.	SHEET NO.
R-3415	11
R/W SHEET NO.	
ROADWAY DESIGN ENGINEER	HYDRAULICS ENGINEER

NORTH CAROLINA PROFESSIONAL SEAL 028951 ENGINEER JOSEPH L. LEWIS 1/27/05

NORTH CAROLINA PROFESSIONAL SEAL 025715 ENGINEER PAUL F. FISHER 5/2/06

8/17/99

NOTE

FOR -L- PROFILE SEE SHEETS 28,29
ALL DRIVEWAY RADII ARE 15' UNLESS NOTED

DETAIL 2C
LATERAL 'V' DITCH
(Not to Scale)

Natural Ground, 2:1, D, 2:1, b, 1'/Ft., Fill Slope, d, Filter Fabric

Min. D = 1.5 Ft.
Max. d = 1.0 Ft.
b = 5.0 Ft.
Type of Liner = CL. 'I' RIP RAP

FROM STA. 105+50 TO 106+80 -L- RT
EST. 38 TONS EST. 101 S.Y.F.F.
EST DDE= 10 C.Y.

DETAIL 1
LATERAL 'V' DITCH
(Not to Scale)

Natural Ground, 2:1, D, 2:1, b, 1'/Ft., Fill Slope

Min. D = 1.5 Ft.
b = 5.0 Ft.

FROM STA. 116+00 TO 118+78 -L- LT
EST DDE= 62 C.Y.

DETAIL 10
SPECIAL CUT DITCH
(Not to Scale)

Natural Ground, 2:1, D, 4:1 or Flatter, Front Ditch Slope

Min. D = 1.0 Ft.

FROM STA. 105+50 TO 106+78 -L- LT
STA. 112+50 TO 113+00 -L- LT

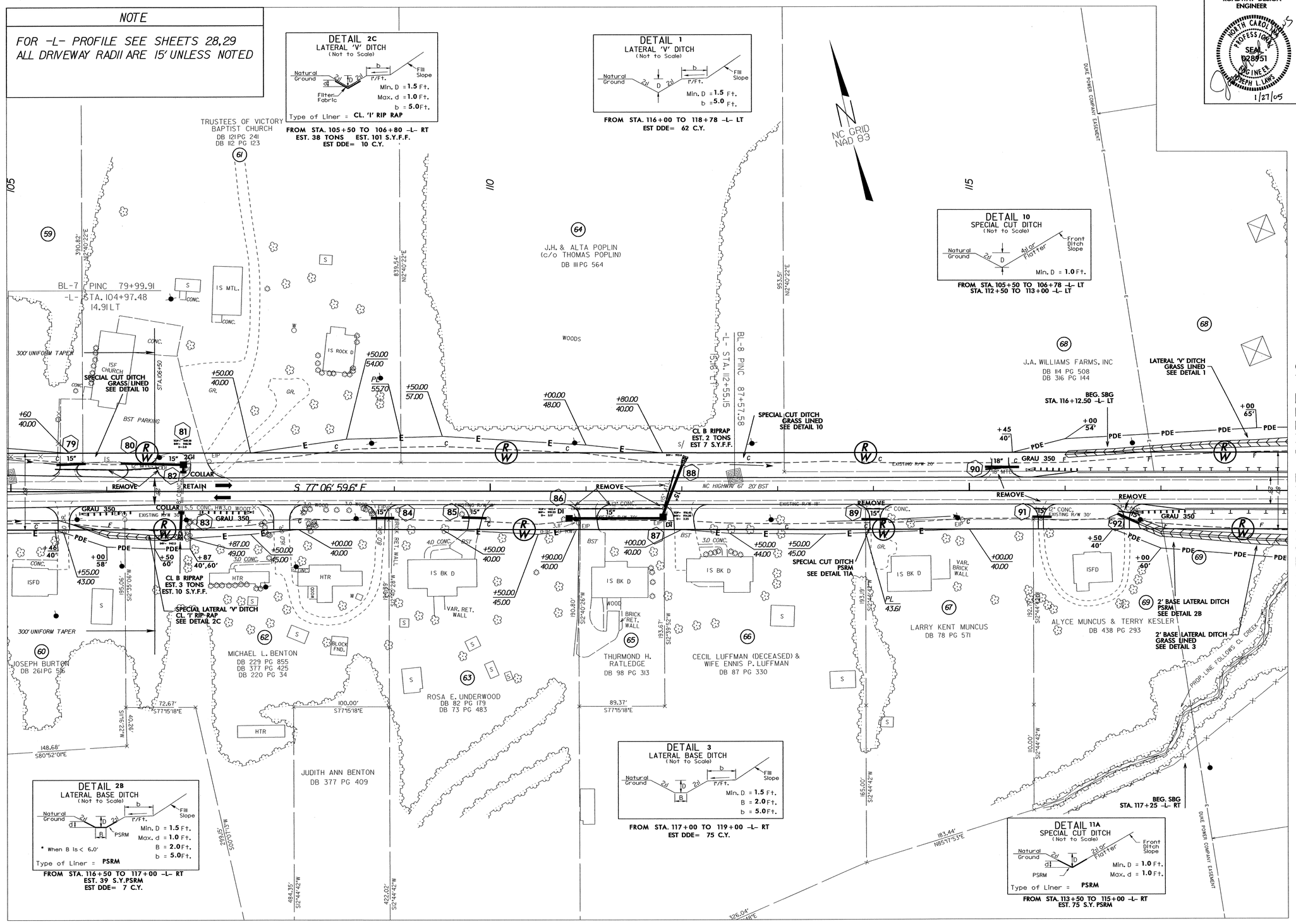

DETAIL 2B
LATERAL BASE DITCH
(Not to Scale)

Natural Ground, 2:1, d, D, 2:1, B, PSRM, b, 1'/Ft., Fill Slope

Min. D = 1.5 Ft.
Max. d = 1.0 Ft.
B = 2.0 Ft.
b = 5.0 Ft.
* When B is < 6.0'
Type of Liner = PSRM

FROM STA. 116+50 TO 117+00 -L- RT
EST. 39 S.Y. PSRM
EST DDE= 7 C.Y.

DETAIL 3
LATERAL BASE DITCH
(Not to Scale)

Natural Ground, 2:1, D, 2:1, B, b, 1'/Ft., Fill Slope

Min. D = 1.5 Ft.
B = 2.0 Ft.
b = 5.0 Ft.

FROM STA. 117+00 TO 119+00 -L- RT
EST DDE= 75 C.Y.

DETAIL 11A
SPECIAL CUT DITCH
(Not to Scale)

Natural Ground, 2:1, d, D, 2:1 or Flatter, Front Ditch Slope, PSRM

Min. D = 1.0 Ft.
Max. d = 1.0 Ft.
Type of Liner = PSRM

FROM STA. 113+50 TO 115+00 -L- RT
EST. 75 S.Y. PSRM

26-JAN-2005 16:30
c:\rdy\r-3415\r3415psll.psh
dgn

PROJECT REFERENCE NO.	SHEET NO.
R-3415	12
R/W SHEET NO.	
ROADWAY DESIGN ENGINEER	HYDRAULICS ENGINEER

NORTH CAROLINA PROFESSIONAL SEAL 028951 ENGINEER JOSEPH L. LAWS — 1/27/05

NORTH CAROLINA PROFESSIONAL SEAL 12615 ENGINEER PAUL F. FISHER — 5/2/06

NOTE

FOR -L- PROFILE SEE SHEET 29
FOR -Y-2- PROFILE SEE SHEET 35
FOR -D2,D3,D4- PROFILES SEE SHEET 38
ALL DRIVEWAY RADII ARE 15' UNLESS NOTED

-D2-

POT Sta. 10+00.00
S 3° 06' 15.3" W
PC Sta. 10+96.67
PI Sta 11+33.11
Δ = 9° 32' 43.6" (RT)
D = 13° 07' 42.2"
L = 72.71'
T = 36.44'
R = 436.43'
-D2- PT Sta. 11+69.38 =
-L- POT Sta. 129+17.66

-D3-

POT Sta. 10+00.00
S 7° 52' 52.0" W
PC Sta. 11+20.07
PI Sta 11+40.92
Δ = 5° 00' 08.0" (RT)
D = 12° 00' 00.0"
L = 41.69'
T = 20.86'
R = 477.46'
PT Sta. 11+61.75
S 12° 53' 00.0" W
-D3- POT Sta. 11+68.92 =
-L- POT Sta. 130+40.98

-D4-

S 37° 27' 05.6" W
PC Sta. 10+41.95
POT Sta. 10+00.00
PI Sta 10+67.07
Δ = 17° 26' 21.2" (LT)
D = 2° 51' 53.2"
L = 50.24'
T = 25.12'
R = 2,000.00'
PT Sta. 10+92.18
S 36° 00' 44.5" W
PC Sta. 11+41.68
PI Sta 11+60.67
Δ = 23° 07' 43.5" (LT)
D = 61° 43' 07.0"
L = 37.47'
T = 19.00'
R = 92.83'
PT Sta. 11+79.15
S 12° 53' 00.9" W
-D4- POT Sta. 11+82.40 =
-L- POT Sta. 130+81.70

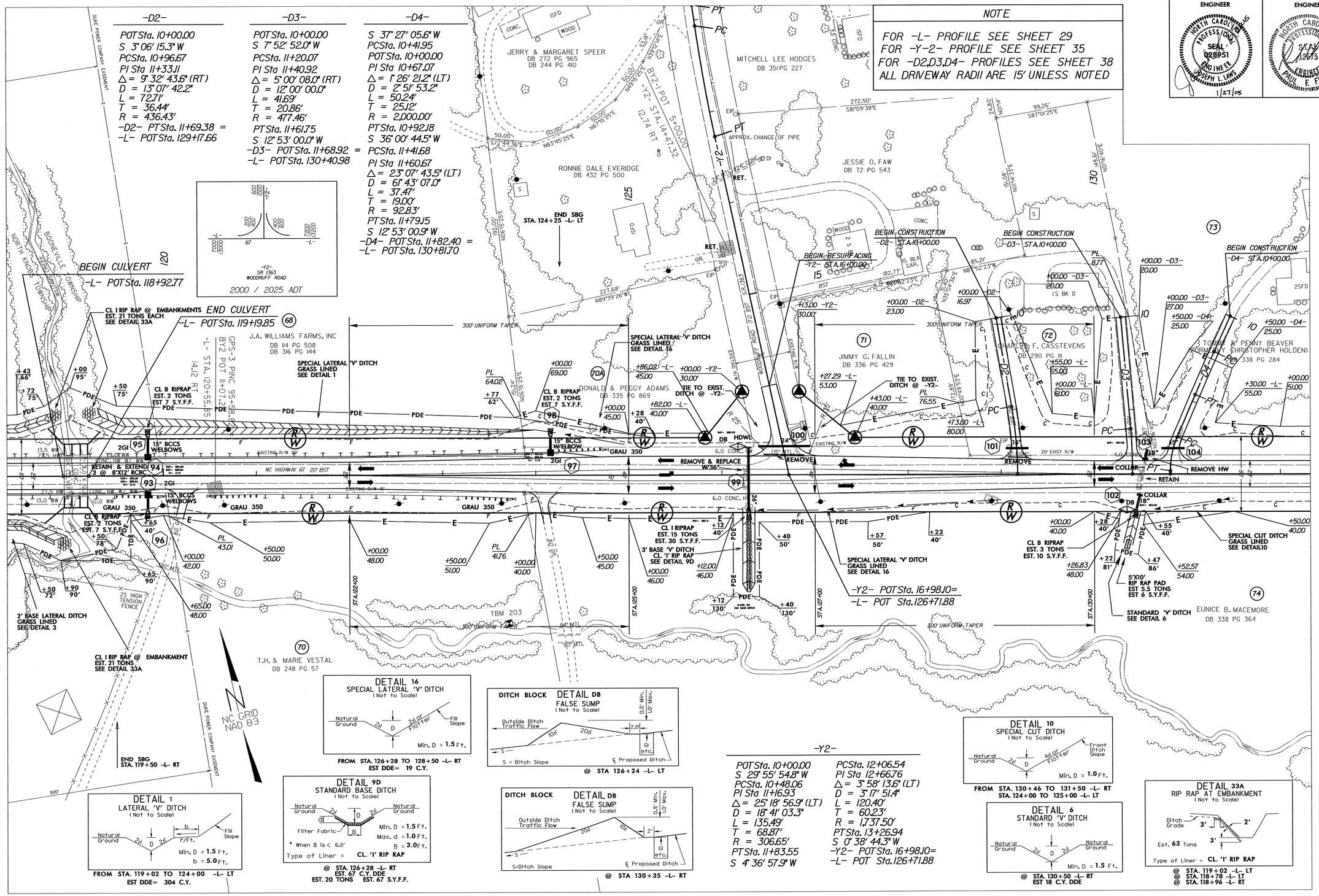

8/17/99

27-JAN-2006 09:36
cashby
R:\R-3415\ps12.psh

PROJECT REFERENCE NO.	SHEET NO.
R-3415	13
R/W SHEET NO.	
ROADWAY DESIGN ENGINEER	HYDRAULICS ENGINEER

NORTH CAROLINA PROFESSIONAL SEAL 028951 ENGINEER JOSEPH L. LAWS — 4/20/2006

NORTH CAROLINA PROFESSIONAL SEAL 19701 ENGINEER PAUL F. FISHER — 5/2/06

NOTE

FOR -L- PROFILE SEE SHEETS 29,30
FOR -D5- PROFILE SEE SHEET 38
ALL DRIVEWAY RADII ARE 15' UNLESS NOTED

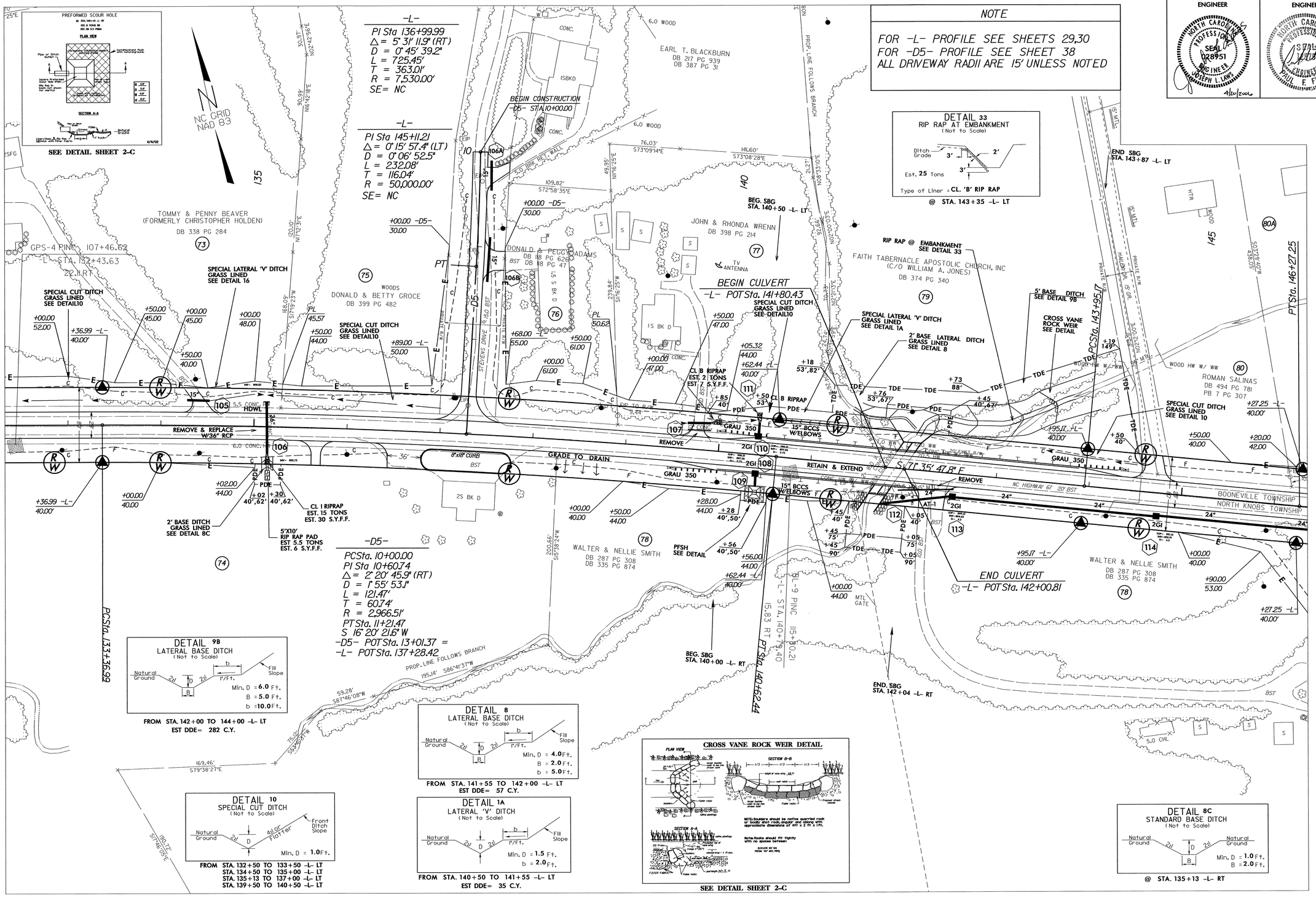

FROM STA. 142+00 TO 144+00 -L- LT
EST DDE= 282 C.Y.

FROM STA. 141+55 TO 142+00 -L- LT
EST DDE= 57 C.Y.

FROM STA. 132+50 TO 133+50 -L- LT
STA. 134+50 TO 135+00 -L- LT
STA. 135+13 TO 137+00 -L- LT
STA. 139+50 TO 140+50 -L- LT

FROM STA. 140+50 TO 141+55 -L- LT
EST DDE= 35 C.Y.

SEE DETAIL SHEET 2-C

@ STA. 143+35 -L- LT

@ STA. 135+13 -L- RT

8/17/99

19-APR-2006 14:56
r3415_sht13.dgn
cashelly
R-3415 DIVISION 7

PROJECT REFERENCE NO.	SHEET NO.
R-3415	14
R/W SHEET NO.	
ROADWAY DESIGN ENGINEER	HYDRAULICS ENGINEER

NORTH CAROLINA PROFESSIONAL SEAL 028951 ENGINEER JOSEPH L. LANG 1/27/05

NORTH CAROLINA PROFESSIONAL SEAL 22673 ENGINEER PAUL E. FISHER 5/2/01

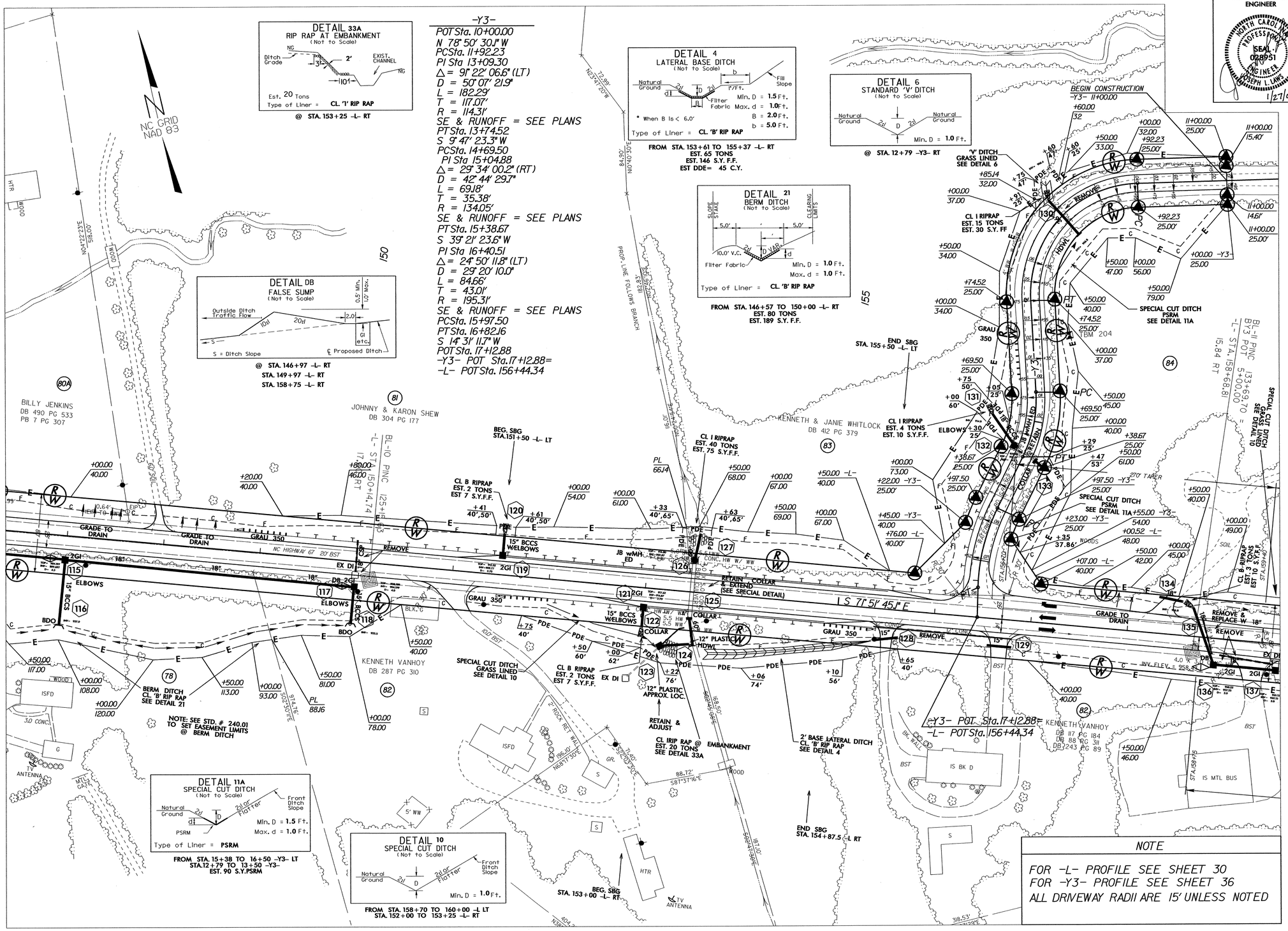

8/17/99

27-JAN-2005 14:00
R-3415 SHEET 14
rashan

PROJECT REFERENCE NO.	SHEET NO.
R-3415	15
R/W SHEET NO.	
ROADWAY DESIGN ENGINEER	HYDRAULICS ENGINEER

NORTH CAROLINA PROFESSIONAL SEAL 028961 ENGINEER JOSEPH L. LAWS 1/27/05

NORTH CAROLINA PROFESSIONAL SEAL 042575 ENGINEER PAUL F. FISHER 5/2/06

NOTE

FOR -L- PROFILE SEE SHEET 30
FOR -Y-4- PROFILE SEE SHEET 36
ALL DRIVEWAY RADII ARE 15' UNLESS NOTED

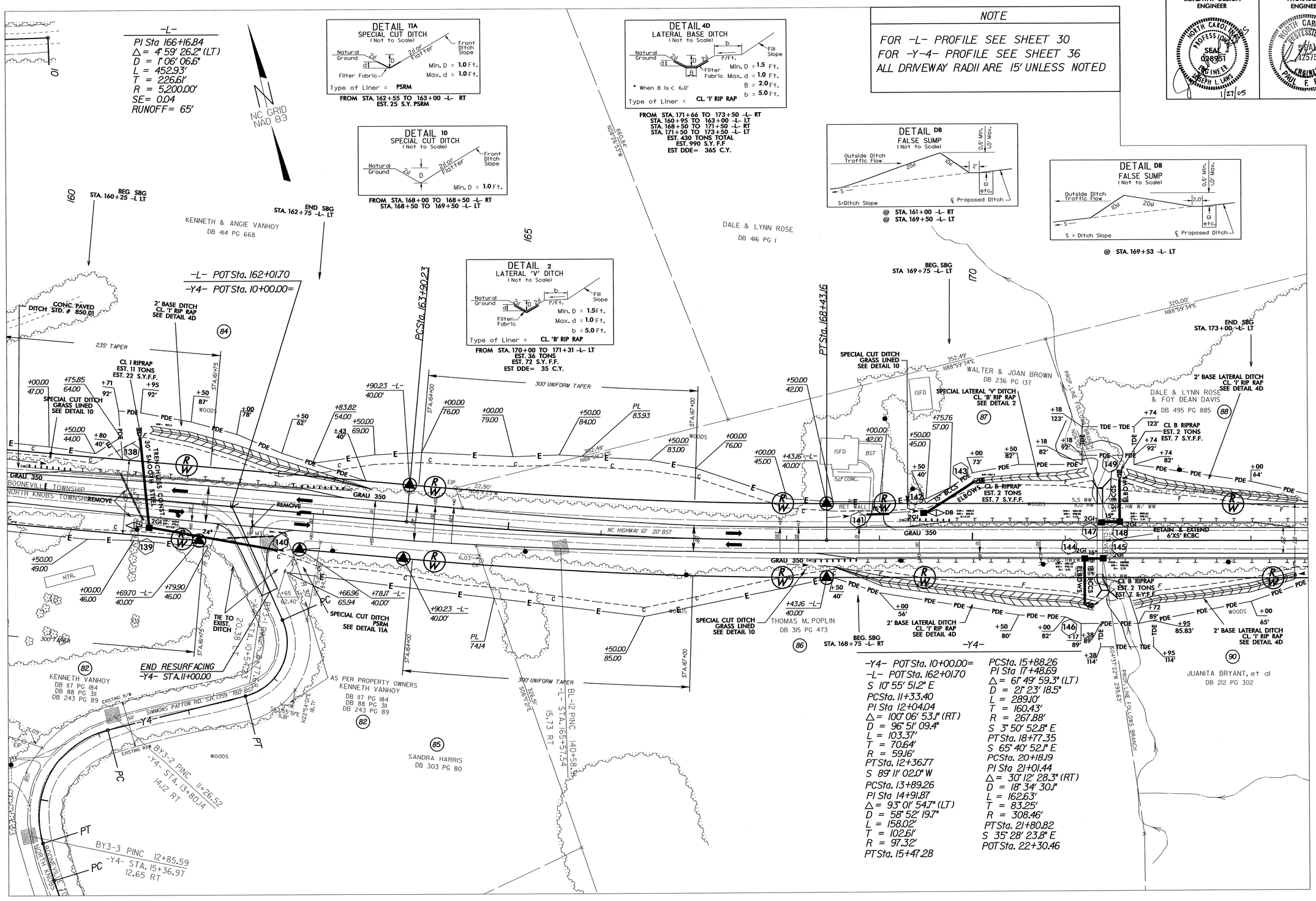

8/17/99

27-JAN-2005 11:11
c:\proj\r-3415\r-3415ps15.psh

PROJECT REFERENCE NO.	SHEET NO.
R-3415	16
R/W SHEET NO.	
ROADWAY DESIGN ENGINEER	HYDRAULICS ENGINEER

NORTH CAROLINA PROFESSIONAL SEAL 027951 ENGINEER JOSEPH L. LAWS 1/27/05

NORTH CAROLINA PROFESSIONAL SEAL 22515 ENGINEER PAUL F. FISHER 5/2/06

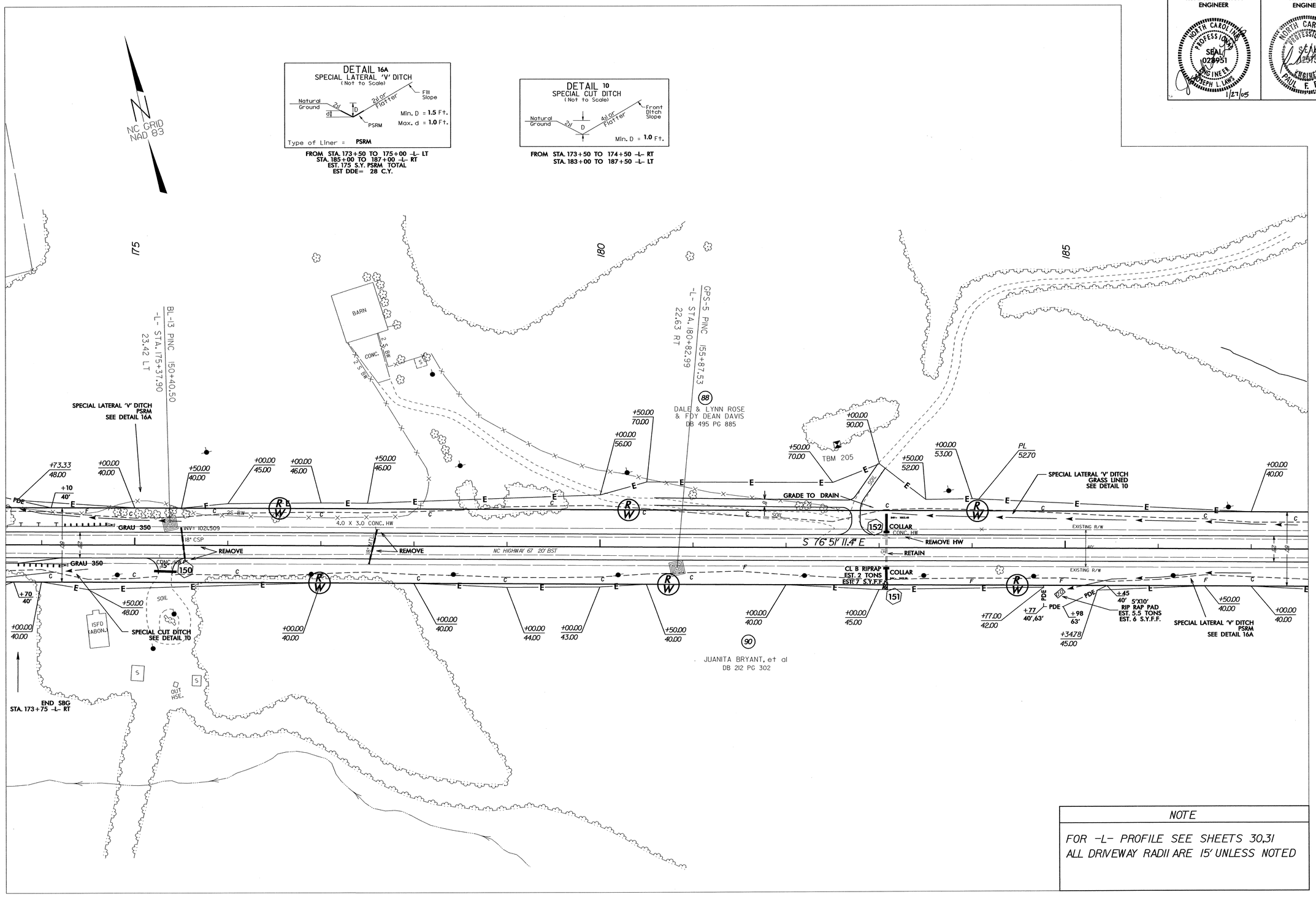

NOTE
FOR -L- PROFILE SEE SHEETS 30,31
ALL DRIVEWAY RADII ARE 15' UNLESS NOTED

8/17/99

27-JAN-2005 11:16
c:\v-dot\3415\r3415ps16.cpsh
rashow

PROJECT REFERENCE NO.	SHEET NO.
R-3415	17
R/W SHEET NO.	
ROADWAY DESIGN ENGINEER	HYDRAULICS ENGINEER

NORTH CAROLINA PROFESSIONAL SEAL 028951 ENGINEER JOSEPH L. LAWS 1/27/05

NORTH CAROLINA PROFESSIONAL SEAL 12915 ENGINEER PAUL F. FISHER 3/2/06

NOTE

FOR -L- PROFILE SEE SHEET 31
ALL DRIVEWAY RADII ARE 15' UNLESS NOTED

DETAIL 4D
LATERAL BASE DITCH
(Not to Scale)

Min. D = 1.5 Ft.
Max. d = 1.0 Ft.
B = 2.0 Ft.
b = 5.0 Ft.
* When B Is < 6.0'
Type of Liner = CL 'I' RIP RAP

FROM STA. 189+50 TO 190+50 -L LT
STA. 198+50 TO 199+75 -L- LT
EST. 80 TONS
EST. 175 S.Y. F.F.
EST DDE= 75 C.Y.

DETAIL 6
STANDARD 'V' DITCH
(Not to Scale)

Min. D = 1.0 Ft.

@ STA. 192+90 -L- LT

-L-

PI Sta 199+74.51
Δ = 0° 06' 38.0" (RT)
D = 0° 01' 29.7"
L = 443.83'
T = 221.92'
R = 230,000.00'
SE = NC

DETAIL DB
FALSE SUMP
(Not to Scale)

@ STA. 189+50 -L- RT

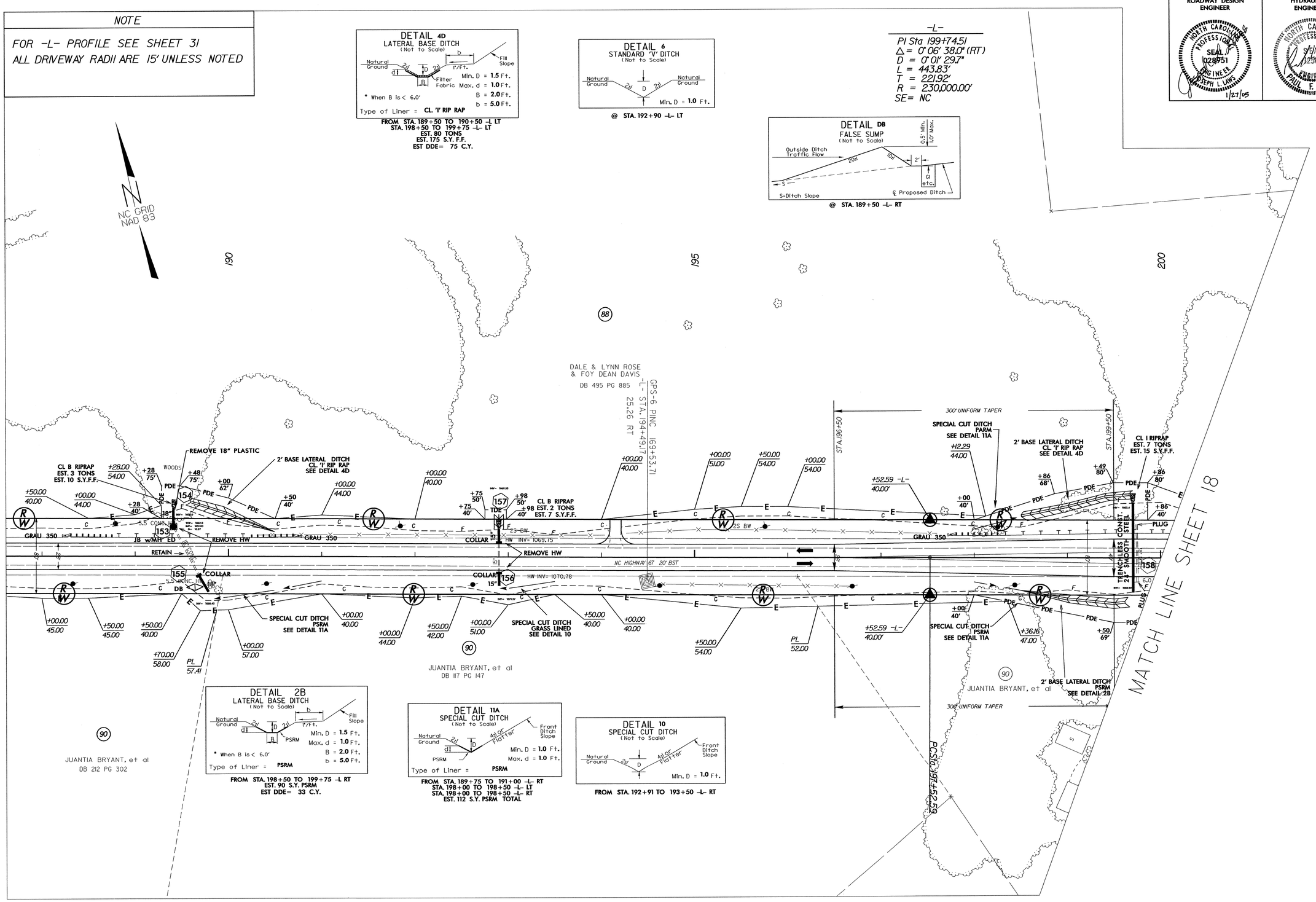

DETAIL 2B
LATERAL BASE DITCH
(Not to Scale)

Min. D = 1.5 Ft.
Max. d = 1.0 Ft.
B = 2.0 Ft.
b = 5.0 Ft.
* When B Is < 6.0'
Type of Liner = PSRM

FROM STA. 198+50 TO 199+75 -L RT
EST. 90 S.Y. PSRM
EST DDE= 33 C.Y.

DETAIL 11A
SPECIAL CUT DITCH
(Not to Scale)

Min. D = 1.0 Ft.
Max. d = 1.0 Ft.
Type of Liner = PSRM

FROM STA. 189+75 TO 191+00 -L- RT
STA. 198+00 TO 198+50 -L- LT
STA. 198+00 TO 198+50 -L- RT
EST. 112 S.Y. PSRM TOTAL

DETAIL 10
SPECIAL CUT DITCH
(Not to Scale)

Min. D = 1.0 Ft.

FROM STA. 192+91 TO 193+50 -L- RT

8/17/99

27-JAN-2005 11:21
c:\ydv_2-3415\3415psl7.psh
rashow AT

PROJECT REFERENCE NO.	SHEET NO.
R-3415	18
R/W SHEET NO.	
ROADWAY DESIGN ENGINEER	HYDRAULICS ENGINEER

NORTH CAROLINA PROFESSIONAL SEAL 028951 ENGINEER JOSEPH L. LAWS 1/27/05

NORTH CAROLINA PROFESSIONAL SEAL 12315 ENGINEER PAUL F. FISHER 5/2/06

NOTE

FOR -L- PROFILE SEE SHEET 32
FOR -Y-5- PROFILE SEE SHEET 37
FOR -Y-6- PROFILE SEE SHEET 37
ALL DRIVEWAY RADII ARE 15' UNLESS NOTED

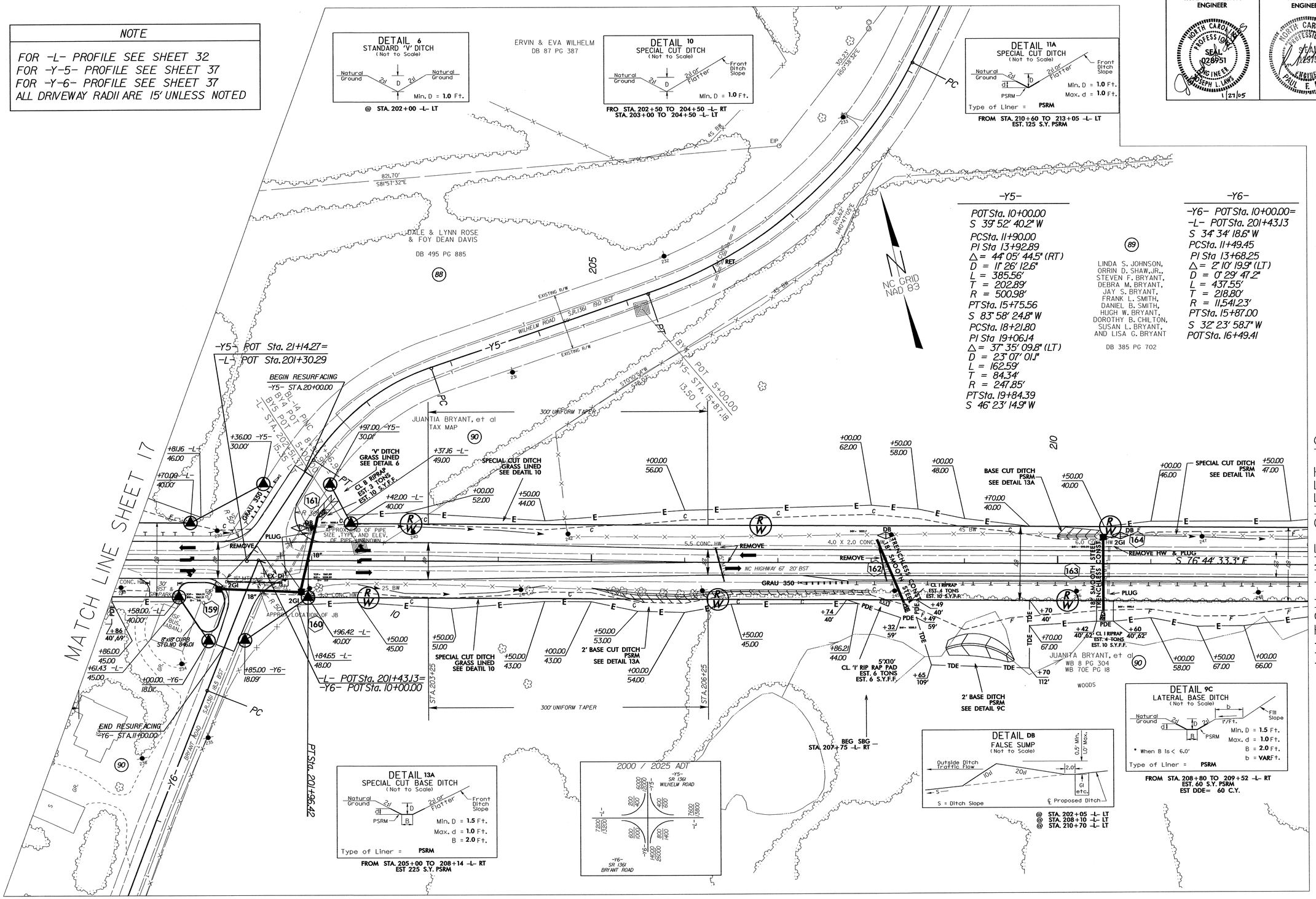

8/17/99

27-JAN-2005 11:26
c:\dgn\r3415_r3415psl18.psh
Fashaw

PROJECT REFERENCE NO.	SHEET NO.
R-3415	19
R/W SHEET NO.	
ROADWAY DESIGN ENGINEER	HYDRAULICS ENGINEER

NORTH CAROLINA PROFESSIONAL SEAL 028951 ENGINEER JOSEPH L. LAWS 1/27/05

NORTH CAROLINA PROFESSIONAL SEAL 12575 ENGINEER PAUL E. FISHER 5/2/06

NOTE

FOR -L- PROFILE SEE SHEET 32
ALL DRIVEWAY RADII ARE 15' UNLESS NOTED

-L-
PI Sta 222+34.56
Δ = 0° 06' 51.0" (LT)
D = 0° 03' 26.3"
L = 199.24'
T = 99.62'
R = 100,000.00'
SE= NC

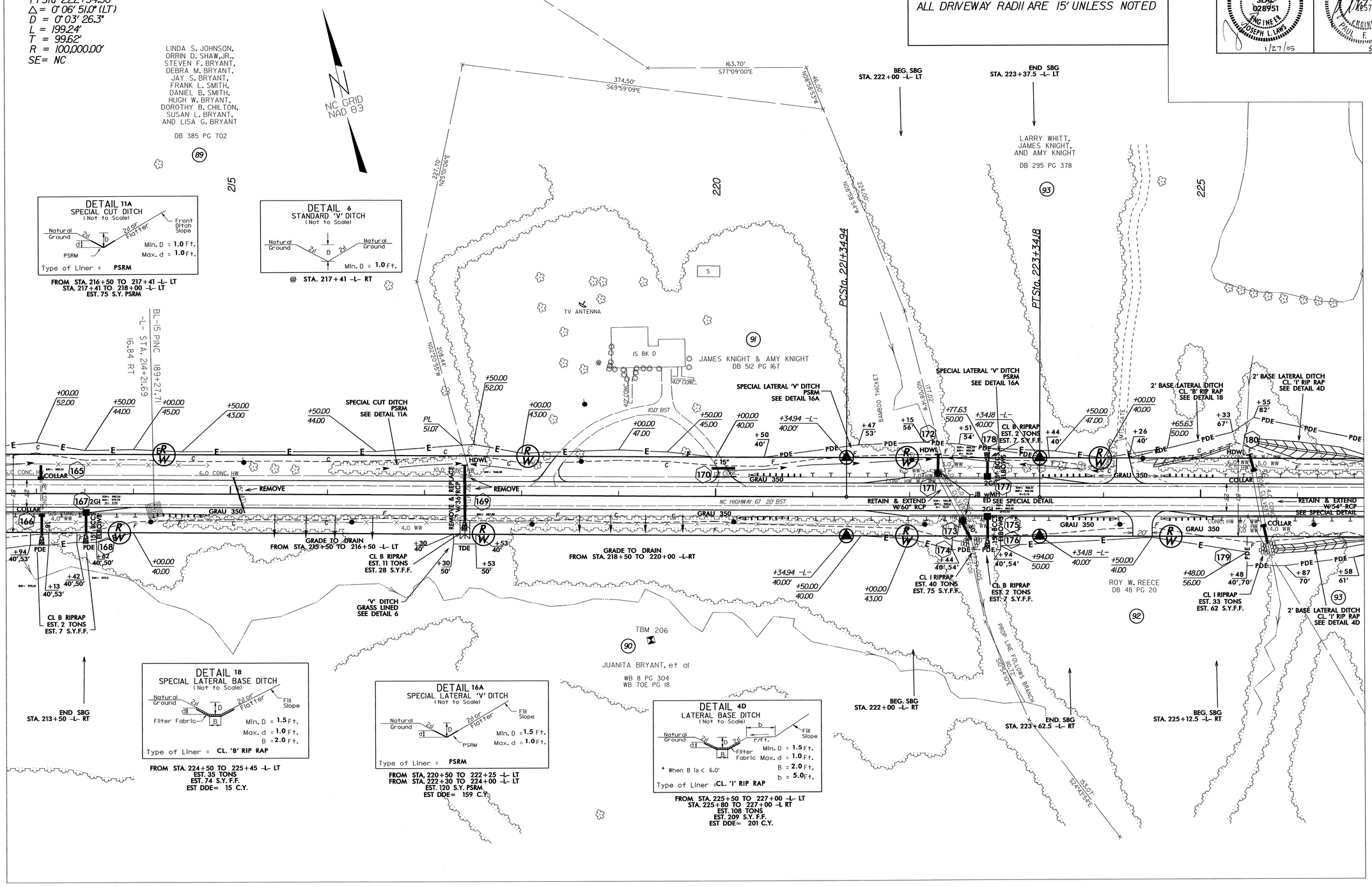

8/17/99

27-JAN-2005 13:36
R:\Hydro\Proj\R-3415\ps19.psh
cashoe AT

PROJECT REFERENCE NO.	SHEET NO.
R-3415	20
R/W SHEET NO.	
ROADWAY DESIGN ENGINEER	HYDRAULICS ENGINEER

NORTH CAROLINA PROFESSIONAL SEAL 028951 ENGINEER JOSEPH L. LAWS — 1/27/05

NORTH CAROLINA PROFESSIONAL SEAL 13613 ENGINEER PAUL F. FISHER — 5/2/06

NOTE

FOR -L- PROFILE SEE SHEET 33

ALL DRIVEWAY RADII ARE 15' UNLESS NOTED

-L-
PI Sta 234+95.73
Δ = 4° 08' 21.2" (LT)
D = 0° 30' 46.1"
L = 807.16'
T = 403.76'
R = 11,172.88'
SE = NC

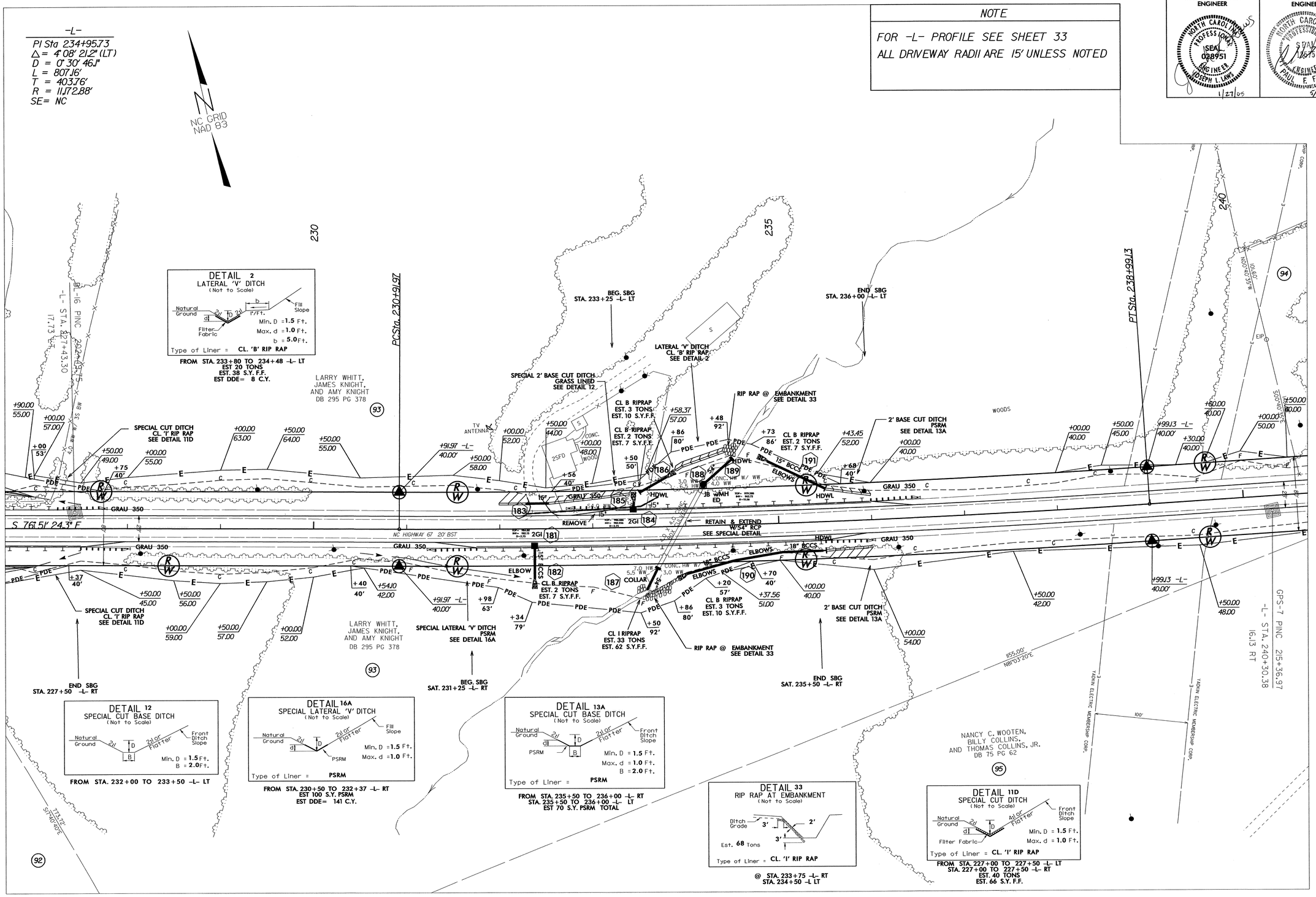

8/17/99

27-JAN-2005 13:42
cl:\dgn\2-3415\r3415ps20.psh
fashaw

PROJECT REFERENCE NO.	SHEET NO.
R-3415	21
R/W SHEET NO.	
ROADWAY DESIGN ENGINEER	HYDRAULICS ENGINEER

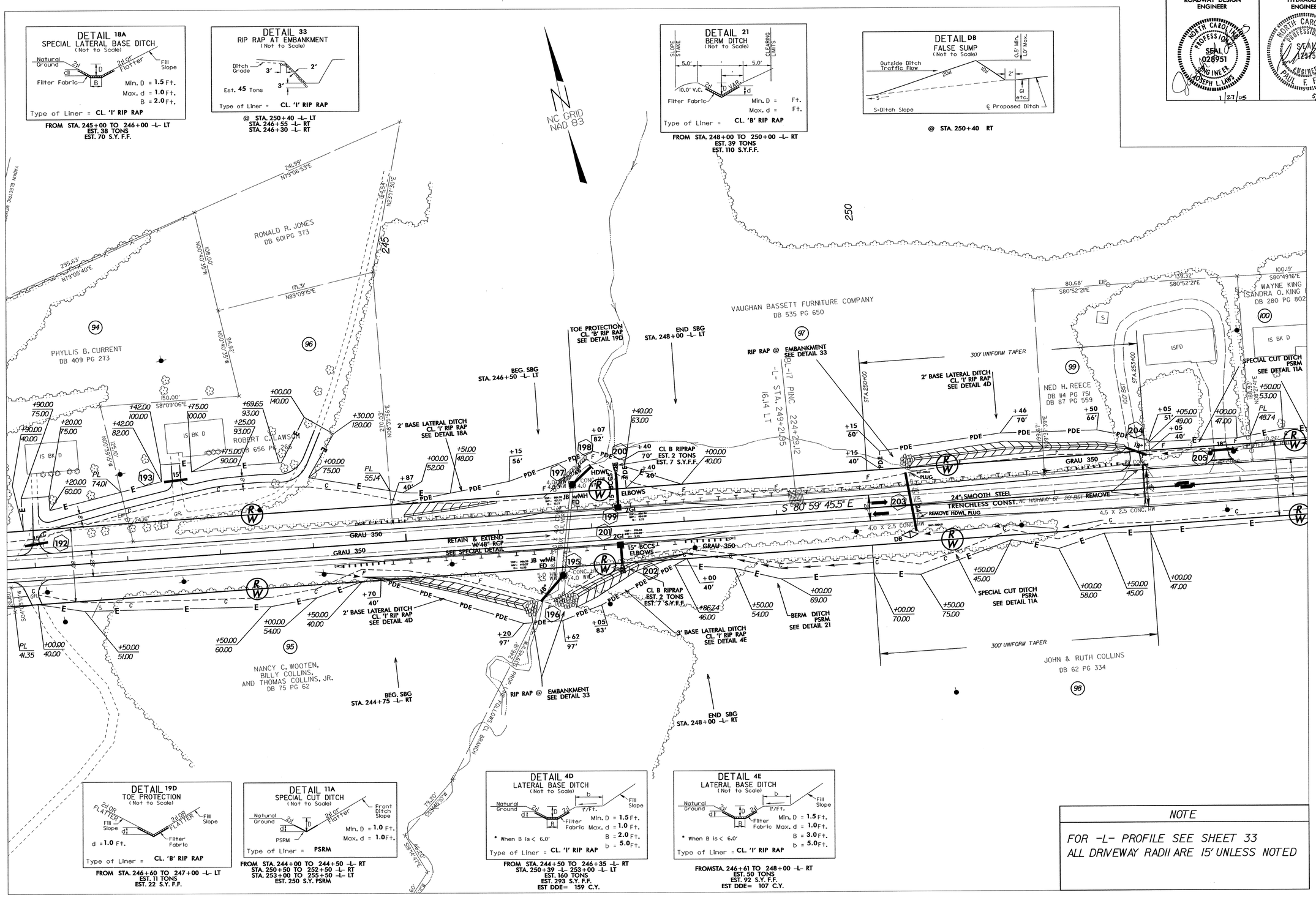

NOTE

FOR -L- PROFILE SEE SHEET 33
ALL DRIVEWAY RADII ARE 15' UNLESS NOTED

8/17/99

27-JAN-2005 13:46
c:\rdy\r-3415\r3415ps21.psh
roshaw AT

PROJECT REFERENCE NO.	SHEET NO.
R-3415	22
R/W SHEET NO.	
ROADWAY DESIGN ENGINEER	HYDRAULICS ENGINEER
NORTH CAROLINA PROFESSIONAL SEAL 028951 ENGINEER JOSEPH L. LANS 1/27/05	NORTH CAROLINA PROFESSIONAL SEAL 19536 ENGINEER PAUL F. FISHER 5/2/06

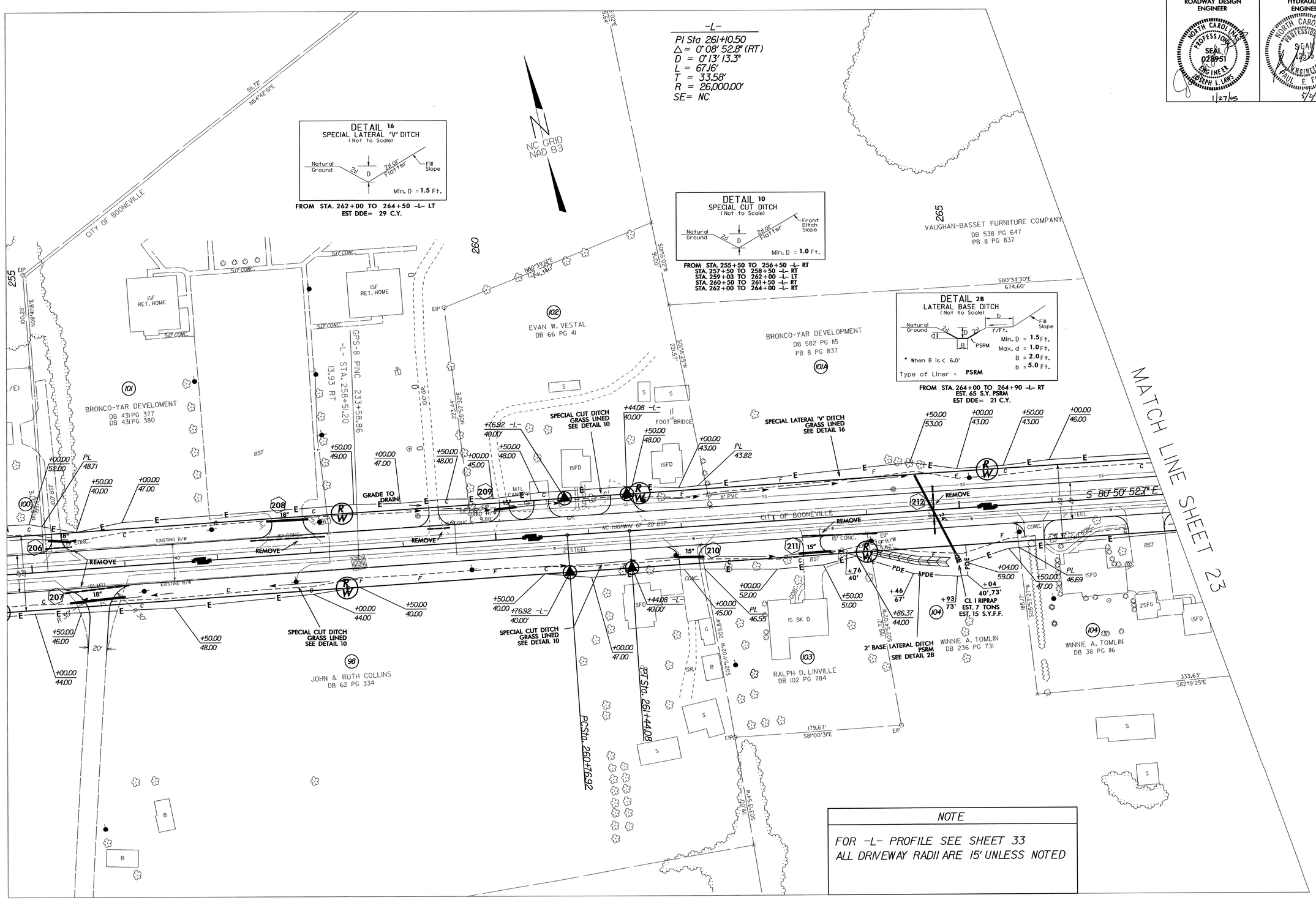

8/17/99

27-JAN-2005 13:52
r:\roadway\proj\r3415ps22.psh
c:\pshpa 41

PROJECT REFERENCE NO.	SHEET NO.
R-3415	23
R/W SHEET NO.	
ROADWAY DESIGN ENGINEER	HYDRAULICS ENGINEER

NORTH CAROLINA PROFESSIONAL SEAL 028951 ENGINEER JOSEPH L. LAWS — 1/27/05

NORTH CAROLINA PROFESSIONAL SEAL 22316 ENGINEER PAUL F. FISHER — 5/2/06

NOTE

FOR -L- PROFILE SEE SHEET 34
FOR -Y-7- PROFILE SEE SHEET 37
ALL DRIVEWAY RADII ARE 15' UNLESS NOTED

-Y7-

-Y7- POT Sta. 10+00.00
S 29° 18' 55.2" E
PI Sta 16+65.18
Δ = 38° 28' 01.7" (RT)
D = 40° 26' 09.2"
L = 95.13'
T = 49.44'
R = 141.70'
PC Sta. 16+15.74
S 9° 09' 06.5" W
PT Sta. 17+10.87
-Y7- POT Sta. 17+17.71 =
-L- POT Sta. 270+45.54

-L-

PI Sta 273+15.51
Δ = 0° 52' 19.5" (LT)
D = 0° 37' 25.3"
L = 139.82'
T = 69.91'
R = 9,186.57'
SE = NC

DETAIL 16
SPECIAL LATERAL 'V' DITCH
(Not to Scale)

Min. D = 1.5 Ft.

FROM STA. 268+00 TO 269+67 -L- LT
EST DDE= 78 C.Y.

DETAIL 6
STANDARD 'V' DITCH
(Not to Scale)

Min. D = 1.0 Ft.

@ STA. 269+67 -L- LT

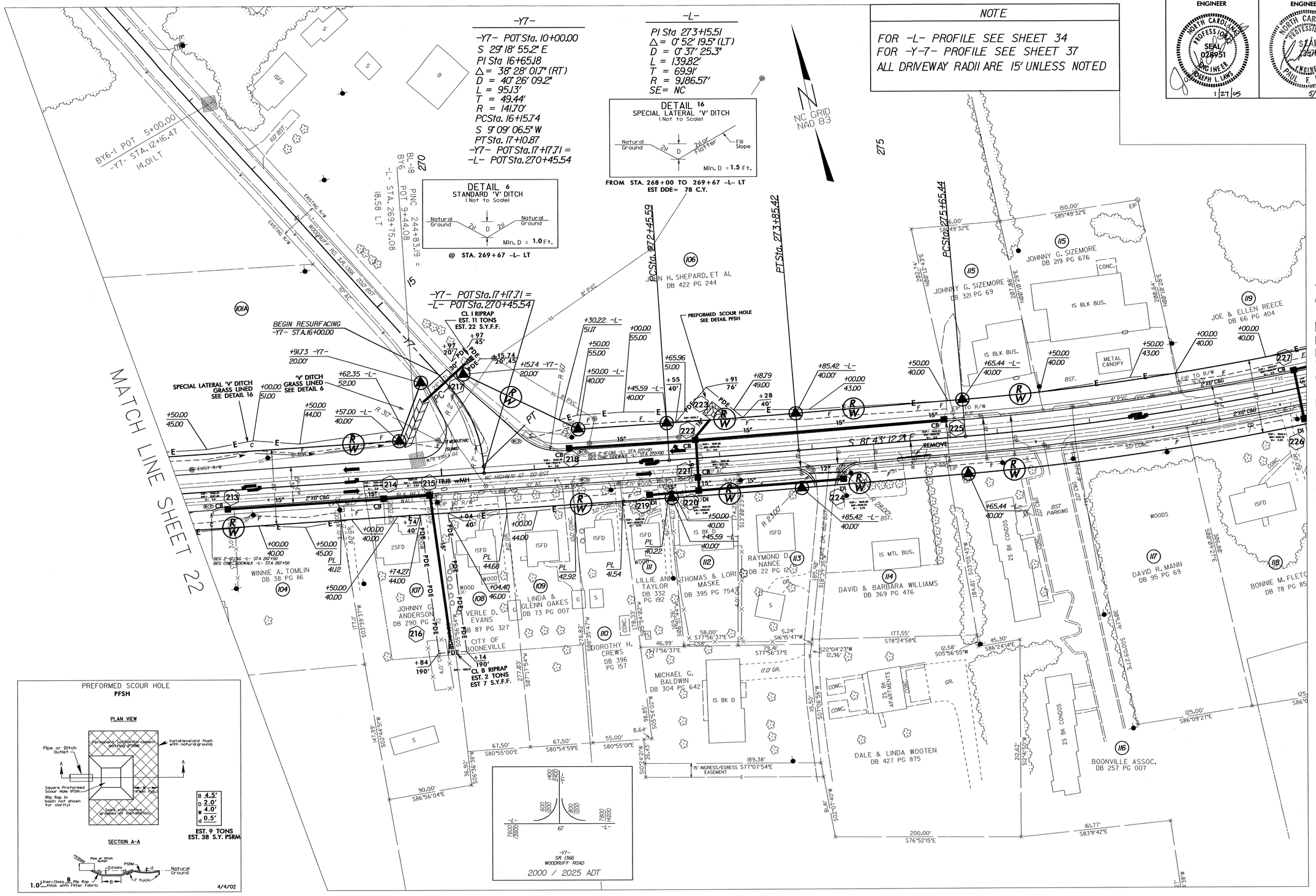

8/17/99

27-JAN-2005 14:03
R:\Hydro\R-3415\R-3415psa23.psh
cashley

PROJECT REFERENCE NO.	SHEET NO.
R-3415	24
R/W SHEET NO.	
ROADWAY DESIGN ENGINEER	HYDRAULICS ENGINEER

NORTH CAROLINA PROFESSIONAL SEAL 028951 ENGINEER JOSEPH L. LAWS 1/27/05

NORTH CAROLINA PROFESSIONAL SEAL 12615 ENGINEER PAUL F. FISHER 5/2/06

NOTE

FOR -L- PROFILE SEE SHEETS 34,35
FOR -Y-8- PROFILE SEE SHEETS 37
ALL DRIVEWAY RADII ARE 15' UNLESS NOTED

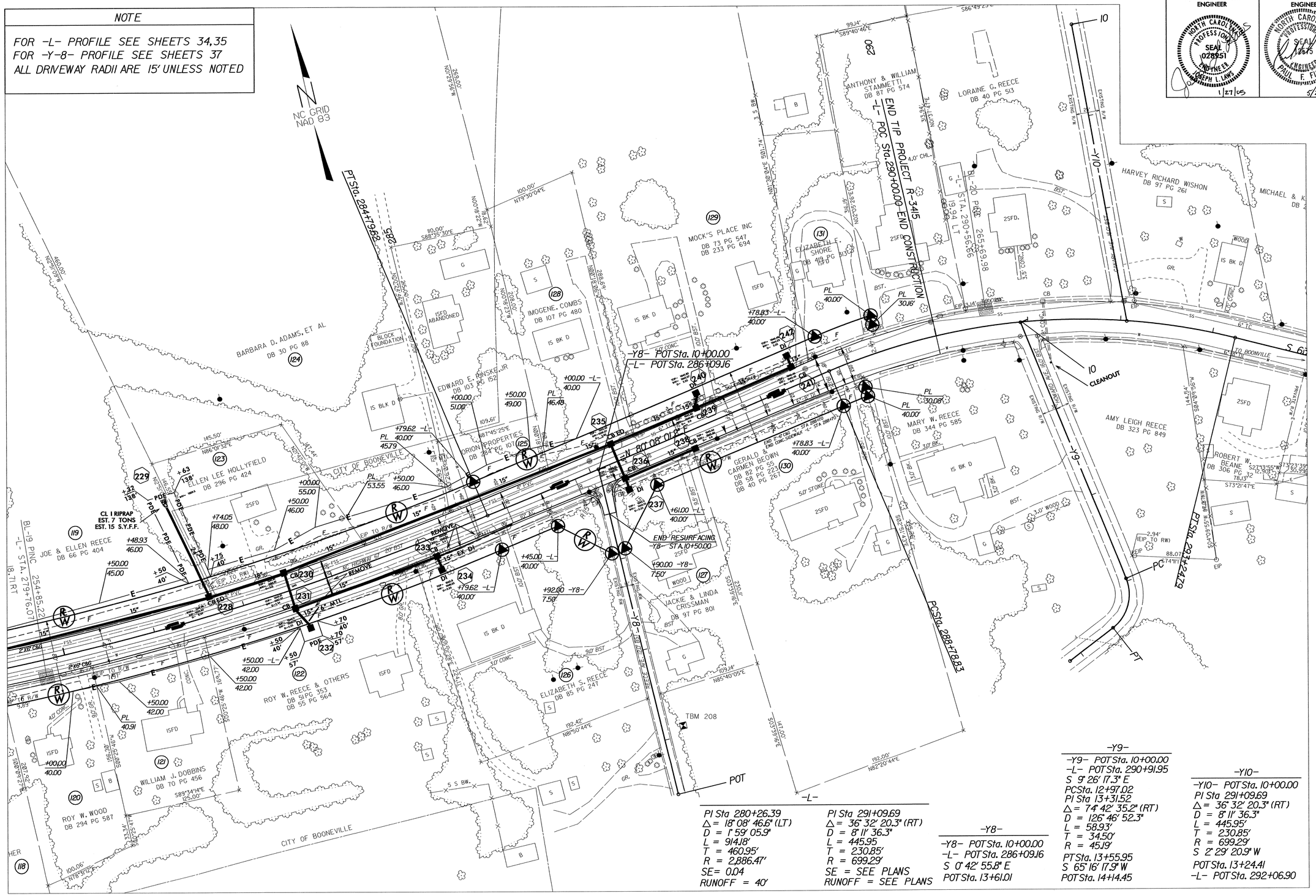

PI Sta 280+26.39
Δ = 18° 08' 46.6" (LT)
D = 1° 59' 05.9"
L = 914.18'
T = 460.95'
R = 2,886.47'
SE = 0.04
RUNOFF = 40'

PI Sta 291+09.69
Δ = 36° 32' 20.3" (RT)
D = 8° 11' 36.3"
L = 445.95
T = 230.85'
R = 699.29'
SE = SEE PLANS
RUNOFF = SEE PLANS

-Y8-
-Y8- POT Sta. 10+00.00
-L- POT Sta. 286+09.16
S 0° 42' 55.8" E
POT Sta. 13+61.01

-Y9-
-Y9- POT Sta. 10+00.00
-L- POT Sta. 290+91.95
S 9° 26' 17.3" E
PC Sta. 12+97.02
PI Sta 13+31.52
Δ = 74° 42' 35.2" (RT)
D = 126° 46' 52.3"
L = 58.93'
T = 34.50'
R = 45.19'
PT Sta. 13+55.95
S 65° 16' 17.9" W
POT Sta. 14+14.45

-Y10-
-Y10- POT Sta. 10+00.00
PI Sta 291+09.69
Δ = 36° 32' 20.3" (RT)
D = 8° 11' 36.3"
L = 445.95'
T = 230.85'
R = 699.29'
S 2° 29' 20.9" W
POT Sta. 13+24.41
-L- POT Sta. 292+06.90

8/17/99

27-JAN-2005 14:08
r:\roadway\proj\r3415ps24.psh
rasmay

PROJECT REFERENCE NO.	SHEET NO.
R-3415	25

ROADWAY DESIGN ENGINEER

NORTH CAROLINA PROFESSIONAL SEAL 028951 ENGINEER JOSEPH L. LAWS

1/27/05

HYDRAULICS ENGINEER

NORTH CAROLINA PROFESSIONAL SEAL 12575 ENGINEER PAUL F. FISHER

5/2/06

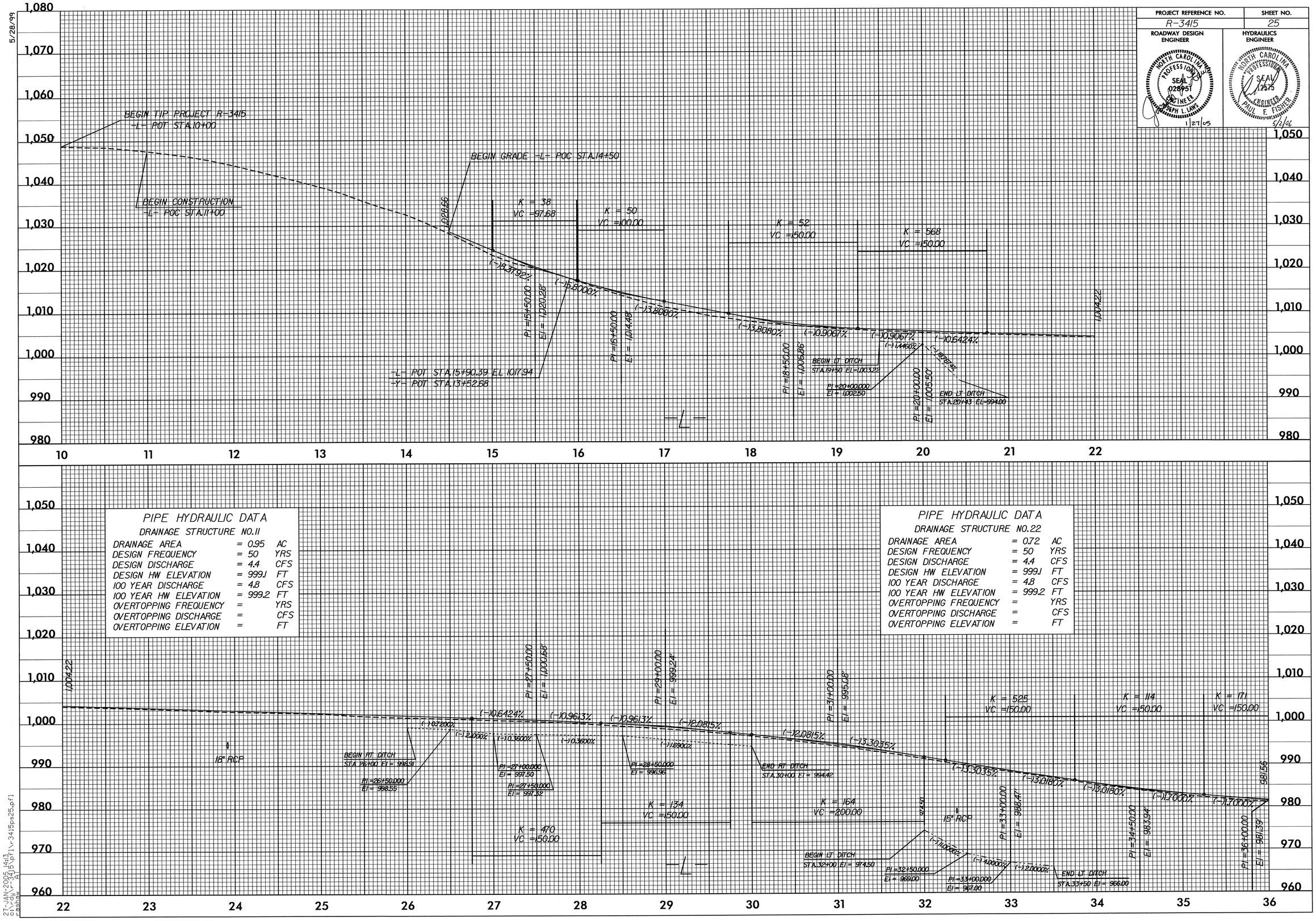

27-JAN-2005 14:13
c:\rdy\r-3415\pfl\r3415ps25.pfl
reshaw AT

5/28/99

PROJECT REFERENCE NO.	SHEET NO.
R-3415	26

ROADWAY DESIGN ENGINEER

NORTH CAROLINA PROFESSIONAL SEAL 028951 ENGINEER JOSEPH L. LAWS

1/27/05

HYDRAULICS ENGINEER

NORTH CAROLINA PROFESSIONAL SEAL 12875 ENGINEER PAUL F. FISHER

3/2/06

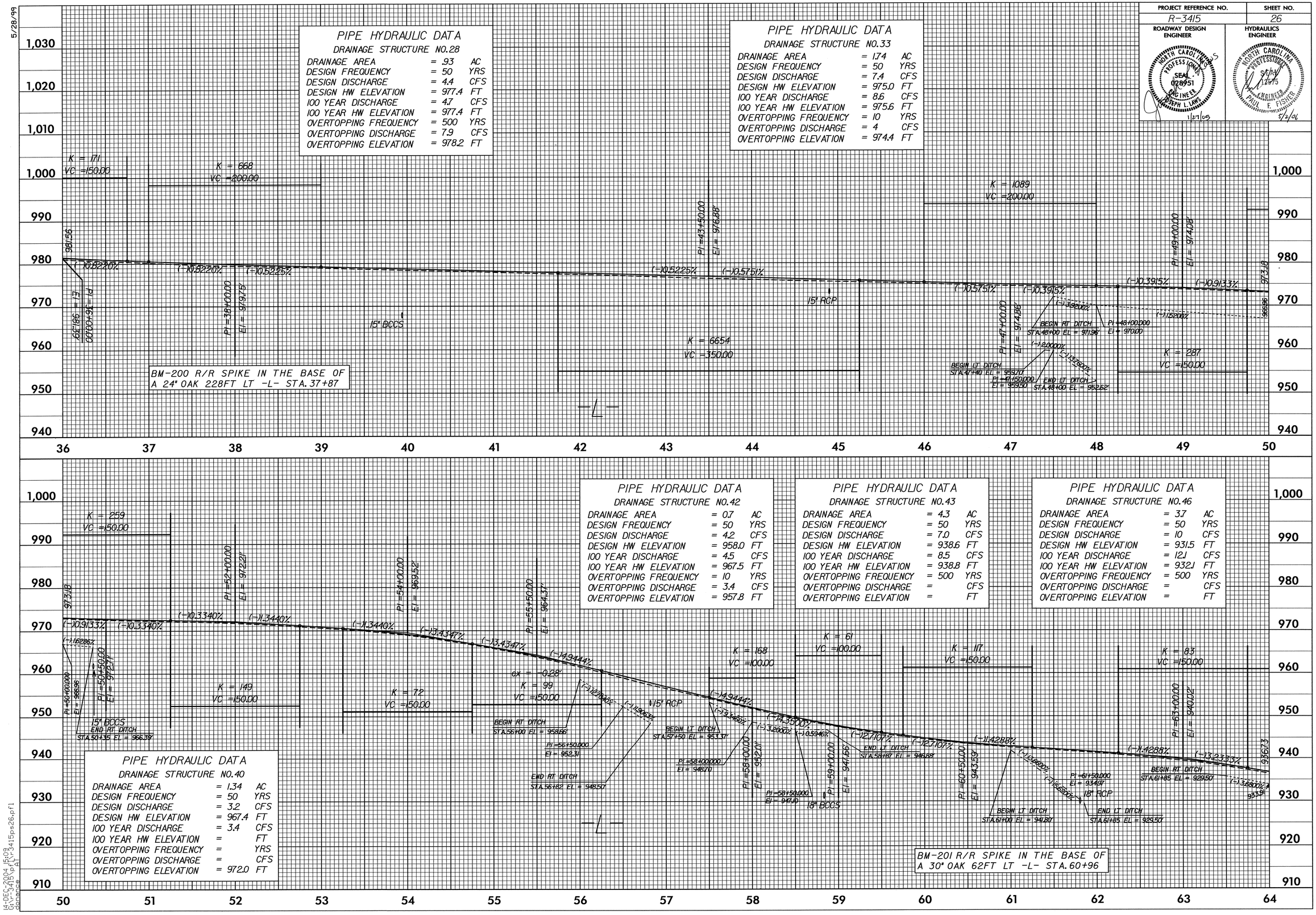

PIPE HYDRAULIC DATA

DRAINAGE STRUCTURE NO.28

DRAINAGE AREA	= .93	AC
DESIGN FREQUENCY	= 50	YRS
DESIGN DISCHARGE	= 4.4	CFS
DESIGN HW ELEVATION	= 977.4	FT
100 YEAR DISCHARGE	= 4.7	CFS
100 YEAR HW ELEVATION	= 977.4	FT
OVERTOPPING FREQUENCY	= 500	YRS
OVERTOPPING DISCHARGE	= 7.9	CFS
OVERTOPPING ELEVATION	= 978.2	FT

PIPE HYDRAULIC DATA

DRAINAGE STRUCTURE NO.33

DRAINAGE AREA	= 1.74	AC
DESIGN FREQUENCY	= 50	YRS
DESIGN DISCHARGE	= 7.4	CFS
DESIGN HW ELEVATION	= 975.0	FT
100 YEAR DISCHARGE	= 8.6	CFS
100 YEAR HW ELEVATION	= 975.6	FT
OVERTOPPING FREQUENCY	= 10	YRS
OVERTOPPING DISCHARGE	= 4	CFS
OVERTOPPING ELEVATION	= 974.4	FT

PIPE HYDRAULIC DATA

DRAINAGE STRUCTURE NO.42

DRAINAGE AREA	= 0.7	AC
DESIGN FREQUENCY	= 50	YRS
DESIGN DISCHARGE	= 4.2	CFS
DESIGN HW ELEVATION	= 958.0	FT
100 YEAR DISCHARGE	= 4.5	CFS
100 YEAR HW ELEVATION	= 967.5	FT
OVERTOPPING FREQUENCY	= 10	YRS
OVERTOPPING DISCHARGE	= 3.4	CFS
OVERTOPPING ELEVATION	= 957.8	FT

PIPE HYDRAULIC DATA

DRAINAGE STRUCTURE NO.43

DRAINAGE AREA	= 4.3	AC
DESIGN FREQUENCY	= 50	YRS
DESIGN DISCHARGE	= 7.0	CFS
DESIGN HW ELEVATION	= 938.6	FT
100 YEAR DISCHARGE	= 8.5	CFS
100 YEAR HW ELEVATION	= 938.8	FT
OVERTOPPING FREQUENCY	= 500	YRS
OVERTOPPING DISCHARGE	=	CFS
OVERTOPPING ELEVATION	=	FT

PIPE HYDRAULIC DATA

DRAINAGE STRUCTURE NO.46

DRAINAGE AREA	= 3.7	AC
DESIGN FREQUENCY	= 50	YRS
DESIGN DISCHARGE	= 10	CFS
DESIGN HW ELEVATION	= 931.5	FT
100 YEAR DISCHARGE	= 12.1	CFS
100 YEAR HW ELEVATION	= 932.1	FT
OVERTOPPING FREQUENCY	= 500	YRS
OVERTOPPING DISCHARGE	=	CFS
OVERTOPPING ELEVATION	=	FT

PIPE HYDRAULIC DATA

DRAINAGE STRUCTURE NO.40

DRAINAGE AREA	= 1.34	AC
DESIGN FREQUENCY	= 50	YRS
DESIGN DISCHARGE	= 3.2	CFS
DESIGN HW ELEVATION	= 967.4	FT
100 YEAR DISCHARGE	= 3.4	CFS
100 YEAR HW ELEVATION	=	FT
OVERTOPPING FREQUENCY	=	YRS
OVERTOPPING DISCHARGE	=	CFS
OVERTOPPING ELEVATION	= 972.0	FT

14-DEC-2004 15:09
G:\r3415\rp\r3415ps26.pf1
donance AT

5/28/99

PROJECT REFERENCE NO.	SHEET NO.
R-3415	27

ROADWAY DESIGN ENGINEER

NORTH CAROLINA PROFESSIONAL SEAL 028951 ENGINEER JOSEPH L. LANS 1/27/05

HYDRAULICS ENGINEER

NORTH CAROLINA PROFESSIONAL SEAL 12575 ENGINEER PAUL F. FISHER 5/2/01

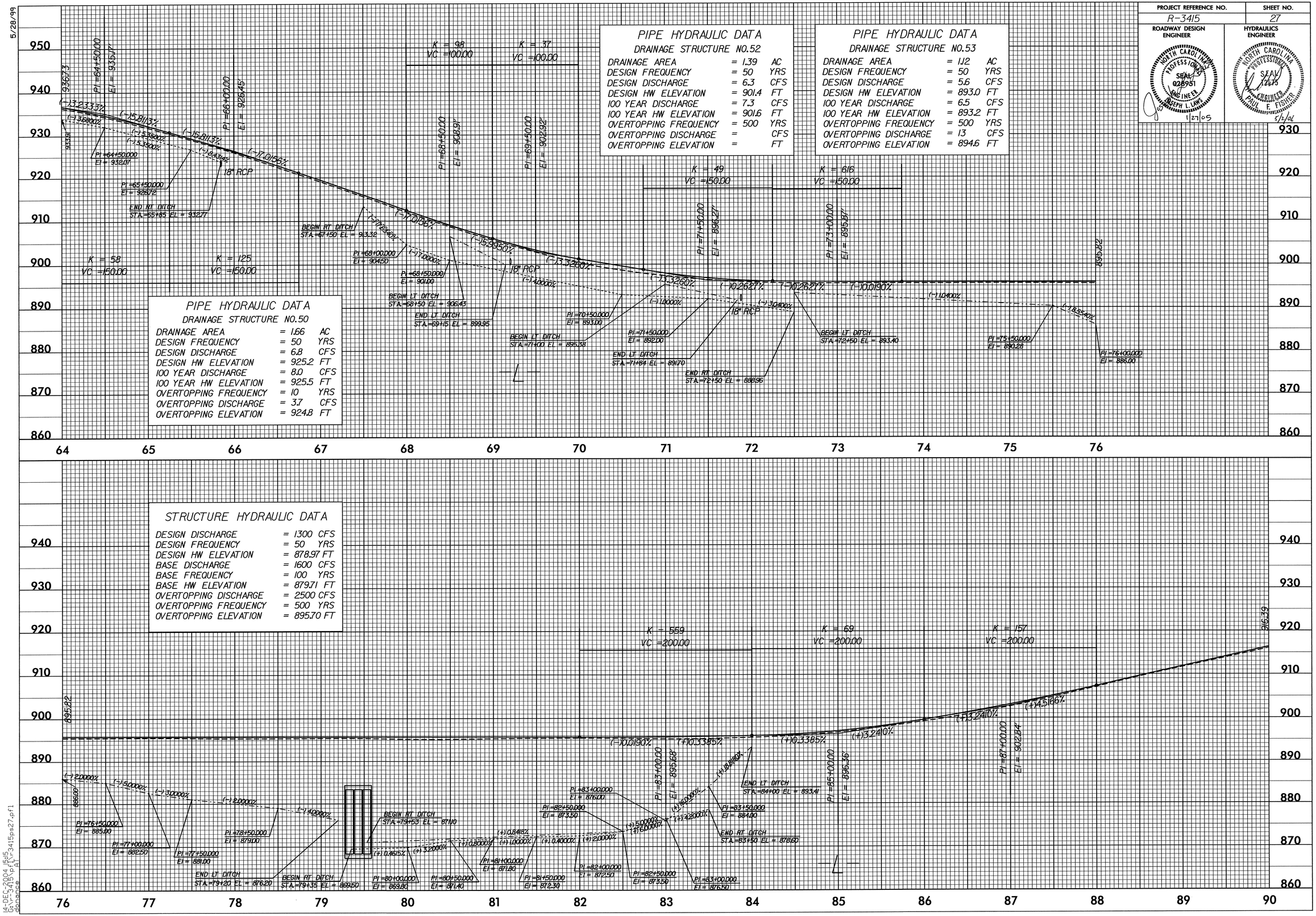

PIPE HYDRAULIC DATA
DRAINAGE STRUCTURE NO.52

DRAINAGE AREA	= 1.39	AC
DESIGN FREQUENCY	= 50	YRS
DESIGN DISCHARGE	= 6.3	CFS
DESIGN HW ELEVATION	= 901.4	FT
100 YEAR DISCHARGE	= 7.3	CFS
100 YEAR HW ELEVATION	= 901.6	FT
OVERTOPPING FREQUENCY	= 500	YRS
OVERTOPPING DISCHARGE	=	CFS
OVERTOPPING ELEVATION	=	FT

PIPE HYDRAULIC DATA
DRAINAGE STRUCTURE NO.53

DRAINAGE AREA	= 1.12	AC
DESIGN FREQUENCY	= 50	YRS
DESIGN DISCHARGE	= 5.6	CFS
DESIGN HW ELEVATION	= 893.0	FT
100 YEAR DISCHARGE	= 6.5	CFS
100 YEAR HW ELEVATION	= 893.2	FT
OVERTOPPING FREQUENCY	= 500	YRS
OVERTOPPING DISCHARGE	= 13	CFS
OVERTOPPING ELEVATION	= 894.6	FT

PIPE HYDRAULIC DATA
DRAINAGE STRUCTURE NO.50

DRAINAGE AREA	= 1.66	AC
DESIGN FREQUENCY	= 50	YRS
DESIGN DISCHARGE	= 6.8	CFS
DESIGN HW ELEVATION	= 925.2	FT
100 YEAR DISCHARGE	= 8.0	CFS
100 YEAR HW ELEVATION	= 925.5	FT
OVERTOPPING FREQUENCY	= 10	YRS
OVERTOPPING DISCHARGE	= 3.7	CFS
OVERTOPPING ELEVATION	= 924.8	FT

14-DEC-2004 15:15
G:\R-3415\Rp\R-3415ps27.pf1
donance
AT: R-3415ps27.pf1

5/28/99

PROJECT REFERENCE NO.	SHEET NO.
R-3415	28

ROADWAY DESIGN ENGINEER

NORTH CAROLINA PROFESSIONAL SEAL 028951 ENGINEER JOSEPH L. LANE 1/27/05

HYDRAULICS ENGINEER

NORTH CAROLINA PROFESSIONAL SEAL 019146 ENGINEER PAUL F. FISHER 5/2/06

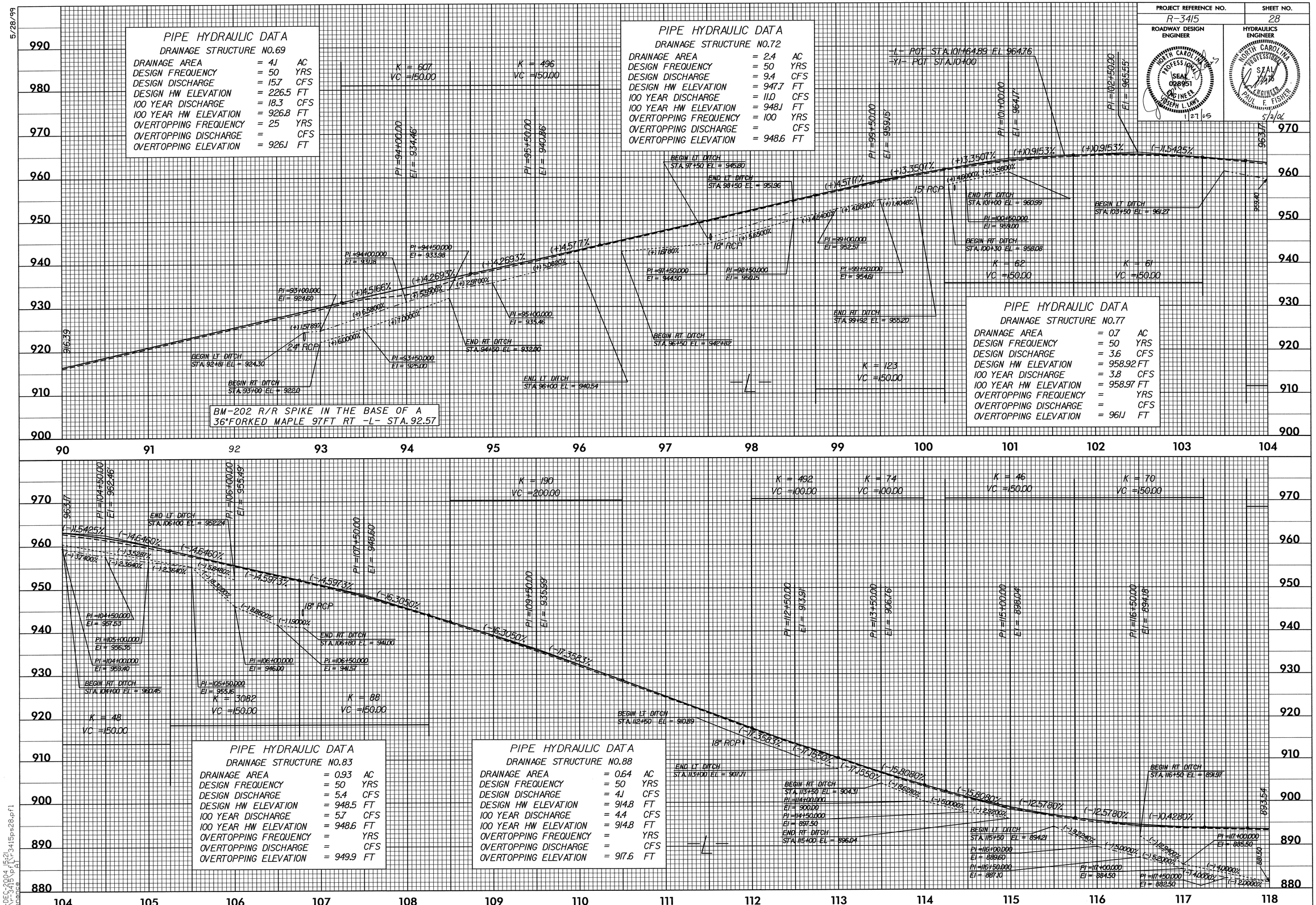

PIPE HYDRAULIC DATA

DRAINAGE STRUCTURE NO.69

DRAINAGE AREA	= 4.1	AC
DESIGN FREQUENCY	= 50	YRS
DESIGN DISCHARGE	= 15.7	CFS
DESIGN HW ELEVATION	= 226.5	FT
100 YEAR DISCHARGE	= 18.3	CFS
100 YEAR HW ELEVATION	= 926.8	FT
OVERTOPPING FREQUENCY	= 25	YRS
OVERTOPPING DISCHARGE	=	CFS
OVERTOPPING ELEVATION	= 926.1	FT

PIPE HYDRAULIC DATA

DRAINAGE STRUCTURE NO.72

DRAINAGE AREA	= 2.4	AC
DESIGN FREQUENCY	= 50	YRS
DESIGN DISCHARGE	= 9.4	CFS
DESIGN HW ELEVATION	= 947.7	FT
100 YEAR DISCHARGE	= 11.0	CFS
100 YEAR HW ELEVATION	= 948.1	FT
OVERTOPPING FREQUENCY	= 100	YRS
OVERTOPPING DISCHARGE	=	CFS
OVERTOPPING ELEVATION	= 948.6	FT

PIPE HYDRAULIC DATA

DRAINAGE STRUCTURE NO.77

DRAINAGE AREA	= 0.7	AC
DESIGN FREQUENCY	= 50	YRS
DESIGN DISCHARGE	= 3.6	CFS
DESIGN HW ELEVATION	= 958.92	FT
100 YEAR DISCHARGE	= 3.8	CFS
100 YEAR HW ELEVATION	= 958.97	FT
OVERTOPPING FREQUENCY	=	YRS
OVERTOPPING DISCHARGE	=	CFS
OVERTOPPING ELEVATION	= 961.1	FT

PIPE HYDRAULIC DATA

DRAINAGE STRUCTURE NO.83

DRAINAGE AREA	= 0.93	AC
DESIGN FREQUENCY	= 50	YRS
DESIGN DISCHARGE	= 5.4	CFS
DESIGN HW ELEVATION	= 948.5	FT
100 YEAR DISCHARGE	= 5.7	CFS
100 YEAR HW ELEVATION	= 948.6	FT
OVERTOPPING FREQUENCY	=	YRS
OVERTOPPING DISCHARGE	=	CFS
OVERTOPPING ELEVATION	= 949.9	FT

PIPE HYDRAULIC DATA

DRAINAGE STRUCTURE NO.88

DRAINAGE AREA	= 0.64	AC
DESIGN FREQUENCY	= 50	YRS
DESIGN DISCHARGE	= 4.1	CFS
DESIGN HW ELEVATION	= 914.8	FT
100 YEAR DISCHARGE	= 4.4	CFS
100 YEAR HW ELEVATION	= 914.8	FT
OVERTOPPING FREQUENCY	=	YRS
OVERTOPPING DISCHARGE	=	CFS
OVERTOPPING ELEVATION	= 917.6	FT

14-DEC-2004 15:21
G:\3415\PROF\R3415ps28.pfl
dennance
R-3415 PROF
AT

5/28/99

PROJECT REFERENCE NO.	SHEET NO.
R-3415	29

ROADWAY DESIGN ENGINEER

NORTH CAROLINA PROFESSIONAL SEAL 028951 ENGINEER JOSEPH L. LAWS
5/3/2006

HYDRAULICS ENGINEER

NORTH CAROLINA PROFESSIONAL SEAL 22713 ENGINEER PAUL F. FISHER
5/10/06

STRUCTURE HYDRAULIC DATA

DESIGN DISCHARGE	= 1400	CFS
DESIGN FREQUENCY	= 50	YRS
DESIGN HW ELEVATION	= 883.95	FT
BASE DISCHARGE	= 1700	CFS
BASE FREQUENCY	= 100	YRS
BASE HW ELEVATION	= 884.81	FT
OVERTOPPING DISCHARGE	= 2500	CFS
OVERTOPPING FREQUENCY	= 500	YRS
OVERTOPPING ELEVATION	= 893.15	FT

PIPE HYDRAULIC DATA

DRAINAGE STRUCTURE NO.99

DRAINAGE AREA	= 12.1	AC
DESIGN FREQUENCY	= 50	YRS
DESIGN DISCHARGE	= 39.0	CFS
DESIGN HW ELEVATION	= 892.4	FT
100 YEAR DISCHARGE	= 45.1	CFS
100 YEAR HW ELEVATION	= 892.9	FT
OVERTOPPING FREQUENCY	= 50	YRS
OVERTOPPING DISCHARGE	= 39.0	CFS
OVERTOPPING ELEVATION	= 892.4	FT

PIPE HYDRAULIC DATA

DRAINAGE STRUCTURE NO.102

DRAINAGE AREA	= 1.85	AC
DESIGN FREQUENCY	= 50	YRS
DESIGN DISCHARGE	= 7.4	CFS
DESIGN HW ELEVATION	= 898.7	FT
100 YEAR DISCHARGE	= 8.6	CFS
100 YEAR HW ELEVATION	= 898.8	FT
OVERTOPPING FREQUENCY	= 500	YRS
OVERTOPPING DISCHARGE	=	CFS
OVERTOPPING ELEVATION	= 900.4	FT

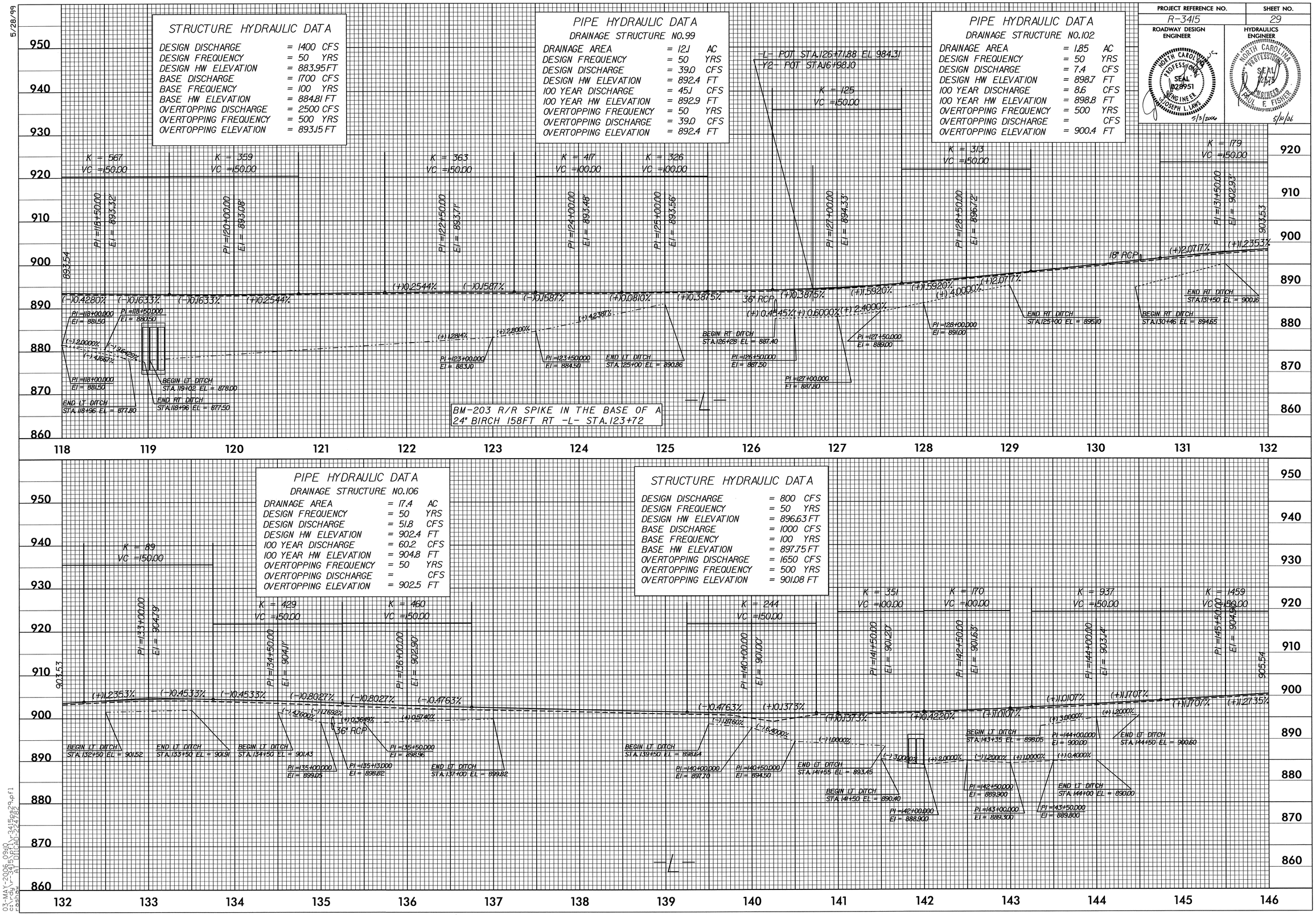

PIPE HYDRAULIC DATA

DRAINAGE STRUCTURE NO.106

DRAINAGE AREA	= 17.4	AC
DESIGN FREQUENCY	= 50	YRS
DESIGN DISCHARGE	= 51.8	CFS
DESIGN HW ELEVATION	= 902.4	FT
100 YEAR DISCHARGE	= 60.2	CFS
100 YEAR HW ELEVATION	= 904.8	FT
OVERTOPPING FREQUENCY	= 50	YRS
OVERTOPPING DISCHARGE	=	CFS
OVERTOPPING ELEVATION	= 902.5	FT

STRUCTURE HYDRAULIC DATA

DESIGN DISCHARGE	= 800	CFS
DESIGN FREQUENCY	= 50	YRS
DESIGN HW ELEVATION	= 896.63	FT
BASE DISCHARGE	= 1000	CFS
BASE FREQUENCY	= 100	YRS
BASE HW ELEVATION	= 897.75	FT
OVERTOPPING DISCHARGE	= 1650	CFS
OVERTOPPING FREQUENCY	= 500	YRS
OVERTOPPING ELEVATION	= 901.08	FT

03-MAY-2006 09:10
R:\Hydraulics\R-3415\R3415pg29.pl1
$USER$ AT DTICAD-224782

5/28/99

PROJECT REFERENCE NO.	SHEET NO.
R-3415	30

ROADWAY DESIGN ENGINEER — NORTH CAROLINA PROFESSIONAL SEAL 028951 ENGINEER JOSEPH L. LAWS — 1/27/05

HYDRAULICS ENGINEER — NORTH CAROLINA PROFESSIONAL SEAL 12675 ENGINEER PAUL F. FISHER — 5/2/06

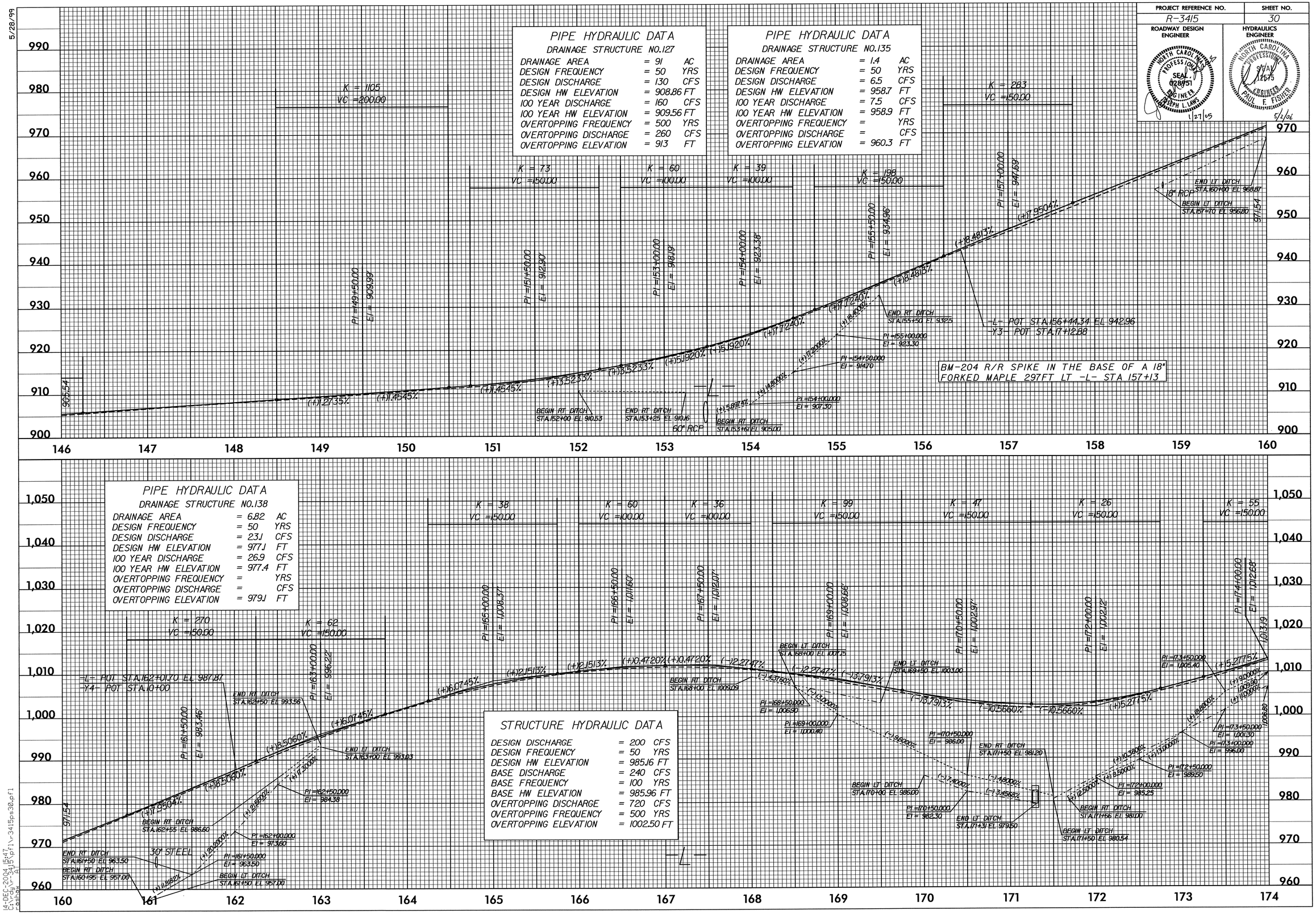

14-DEC-2004 15:47
(4-PER-LINE)
cashow

5/28/99

PROJECT REFERENCE NO.	SHEET NO.
R-3415	31

ROADWAY DESIGN ENGINEER

NORTH CAROLINA PROFESSIONAL SEAL 028951 ENGINEER JOSEPH L. LEWIS

1/27/05

HYDRAULICS ENGINEER

NORTH CAROLINA PROFESSIONAL SEAL 026319 ENGINEER PAUL F. FISHER

5/2/06

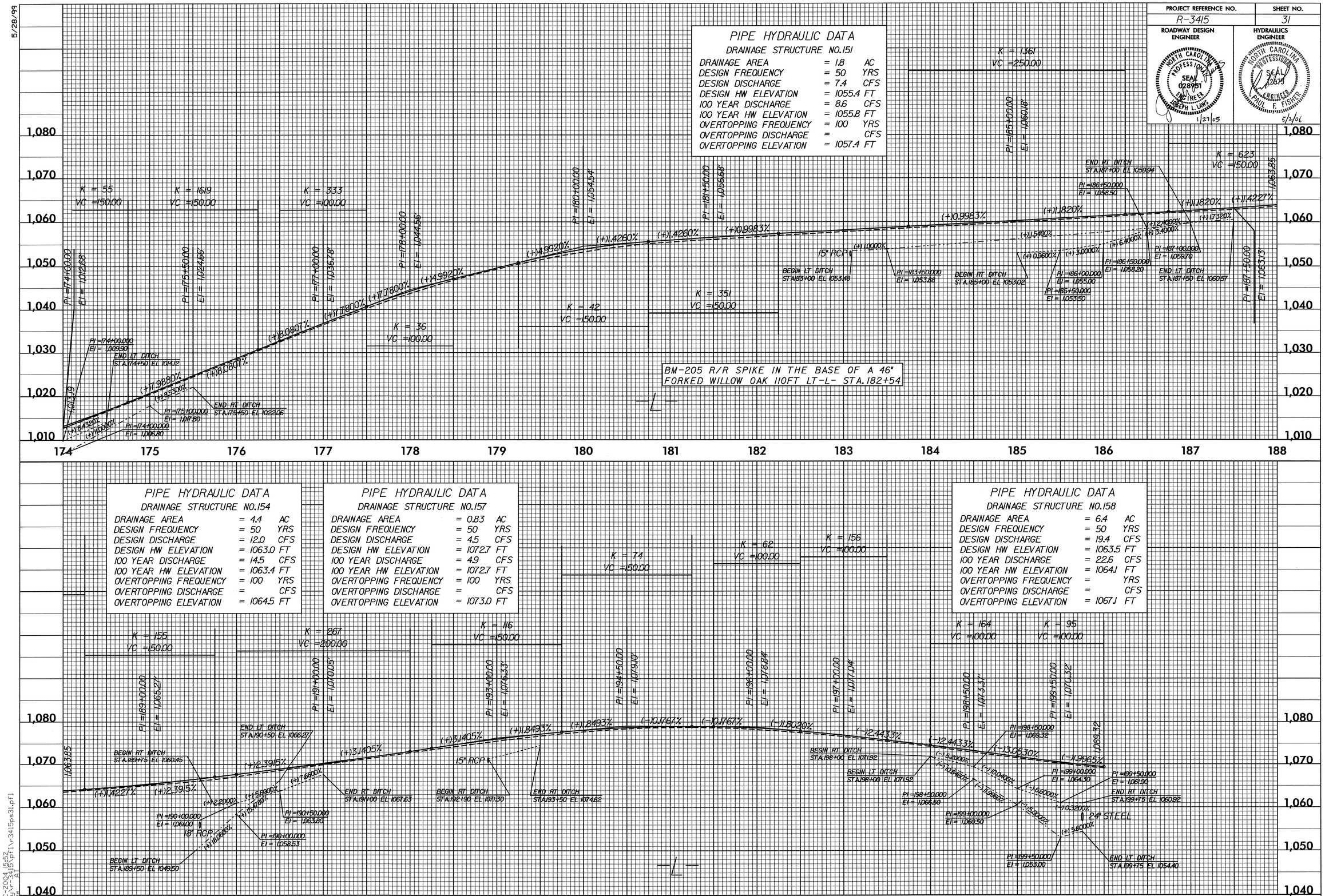

14-DEC-2004 15:52
C:\rdu\R-3415\pf1\r3415ps31.pf1
rashow

5/28/99

PROJECT REFERENCE NO.	SHEET NO.
R-3415	32

ROADWAY DESIGN ENGINEER

NORTH CAROLINA PROFESSIONAL SEAL 028951 ENGINEER JOSEPH L. LAWS
1/21/05

HYDRAULICS ENGINEER

NORTH CAROLINA PROFESSIONAL SEAL 19824 ENGINEER PAUL F. FISHER
5/2/06

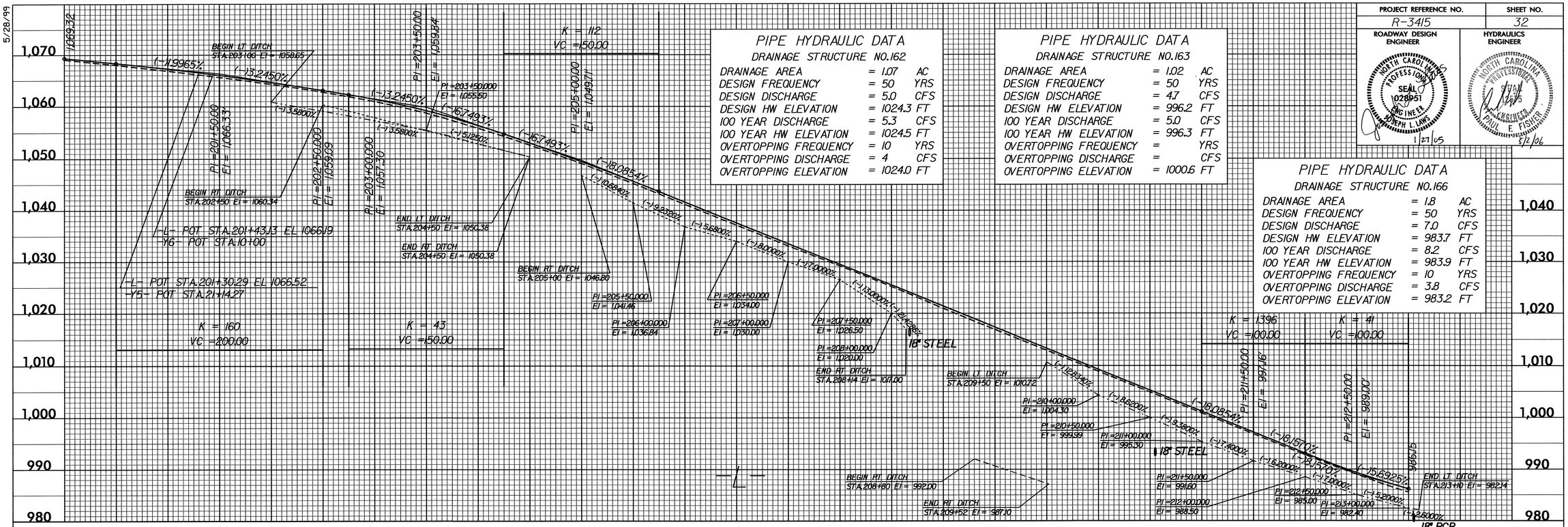

PIPE HYDRAULIC DATA
DRAINAGE STRUCTURE NO.162

DRAINAGE AREA	= 1.07	AC
DESIGN FREQUENCY	= 50	YRS
DESIGN DISCHARGE	= 5.0	CFS
DESIGN HW ELEVATION	= 1024.3	FT
100 YEAR DISCHARGE	= 5.3	CFS
100 YEAR HW ELEVATION	= 1024.5	FT
OVERTOPPING FREQUENCY	= 10	YRS
OVERTOPPING DISCHARGE	= 4	CFS
OVERTOPPING ELEVATION	= 1024.0	FT

PIPE HYDRAULIC DATA
DRAINAGE STRUCTURE NO.163

DRAINAGE AREA	= 1.02	AC
DESIGN FREQUENCY	= 50	YRS
DESIGN DISCHARGE	= 4.7	CFS
DESIGN HW ELEVATION	= 996.2	FT
100 YEAR DISCHARGE	= 5.0	CFS
100 YEAR HW ELEVATION	= 996.3	FT
OVERTOPPING FREQUENCY	=	YRS
OVERTOPPING DISCHARGE	=	CFS
OVERTOPPING ELEVATION	= 1000.6	FT

PIPE HYDRAULIC DATA
DRAINAGE STRUCTURE NO.166

DRAINAGE AREA	= 1.8	AC
DESIGN FREQUENCY	= 50	YRS
DESIGN DISCHARGE	= 7.0	CFS
DESIGN HW ELEVATION	= 983.7	FT
100 YEAR DISCHARGE	= 8.2	CFS
100 YEAR HW ELEVATION	= 983.9	FT
OVERTOPPING FREQUENCY	= 10	YRS
OVERTOPPING DISCHARGE	= 3.8	CFS
OVERTOPPING ELEVATION	= 983.2	FT

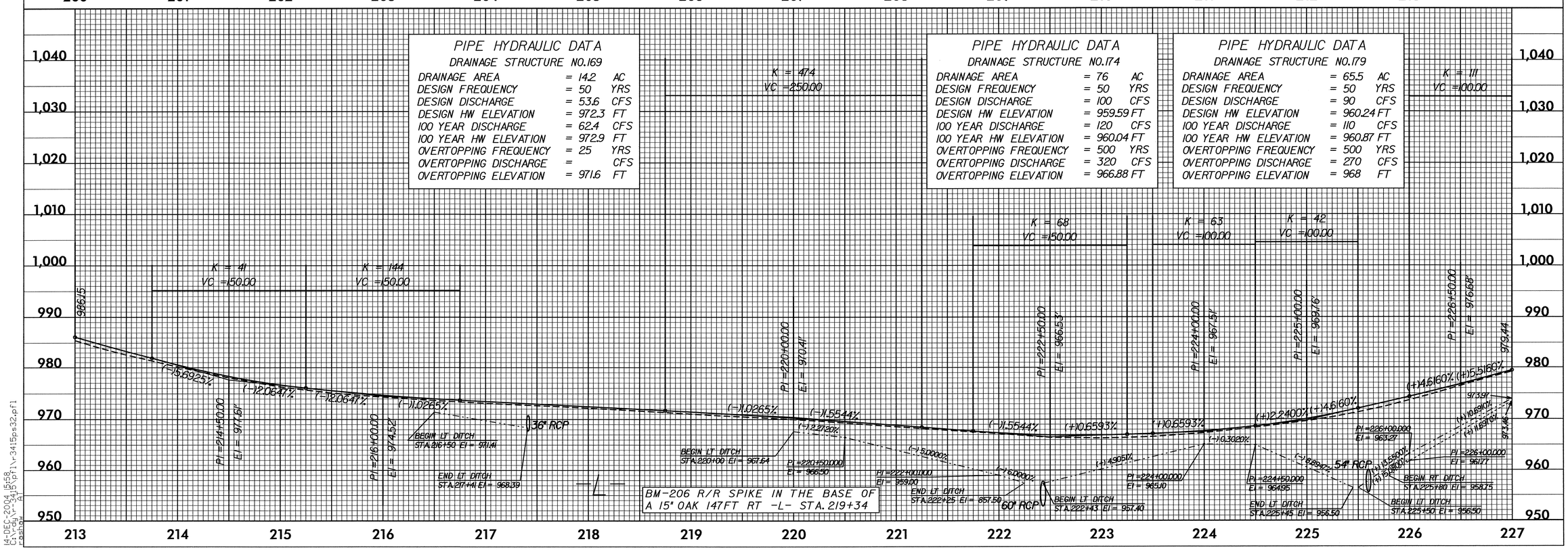

PIPE HYDRAULIC DATA
DRAINAGE STRUCTURE NO.169

DRAINAGE AREA	= 14.2	AC
DESIGN FREQUENCY	= 50	YRS
DESIGN DISCHARGE	= 53.6	CFS
DESIGN HW ELEVATION	= 972.3	FT
100 YEAR DISCHARGE	= 62.4	CFS
100 YEAR HW ELEVATION	= 972.9	FT
OVERTOPPING FREQUENCY	= 25	YRS
OVERTOPPING DISCHARGE	=	CFS
OVERTOPPING ELEVATION	= 971.6	FT

PIPE HYDRAULIC DATA
DRAINAGE STRUCTURE NO.174

DRAINAGE AREA	= 76	AC
DESIGN FREQUENCY	= 50	YRS
DESIGN DISCHARGE	= 100	CFS
DESIGN HW ELEVATION	= 959.59	FT
100 YEAR DISCHARGE	= 120	CFS
100 YEAR HW ELEVATION	= 960.04	FT
OVERTOPPING FREQUENCY	= 500	YRS
OVERTOPPING DISCHARGE	= 320	CFS
OVERTOPPING ELEVATION	= 966.88	FT

PIPE HYDRAULIC DATA
DRAINAGE STRUCTURE NO.179

DRAINAGE AREA	= 65.5	AC
DESIGN FREQUENCY	= 50	YRS
DESIGN DISCHARGE	= 90	CFS
DESIGN HW ELEVATION	= 960.24	FT
100 YEAR DISCHARGE	= 110	CFS
100 YEAR HW ELEVATION	= 960.87	FT
OVERTOPPING FREQUENCY	= 500	YRS
OVERTOPPING DISCHARGE	= 270	CFS
OVERTOPPING ELEVATION	= 968	FT

14-DEC-2004 15:58
C:\pwworking\cdot\d0341\p01\r3415ps32.pf1
cashow

5/28/99

PROJECT REFERENCE NO.	SHEET NO.
R-3415	33

ROADWAY DESIGN ENGINEER

NORTH CAROLINA PROFESSIONAL SEAL 028931 ENGINEER JOSEPH L. LAWS

1/27/05

HYDRAULICS ENGINEER

NORTH CAROLINA PROFESSIONAL SEAL 022375 ENGINEER PAUL E. FISHER

5/2/06

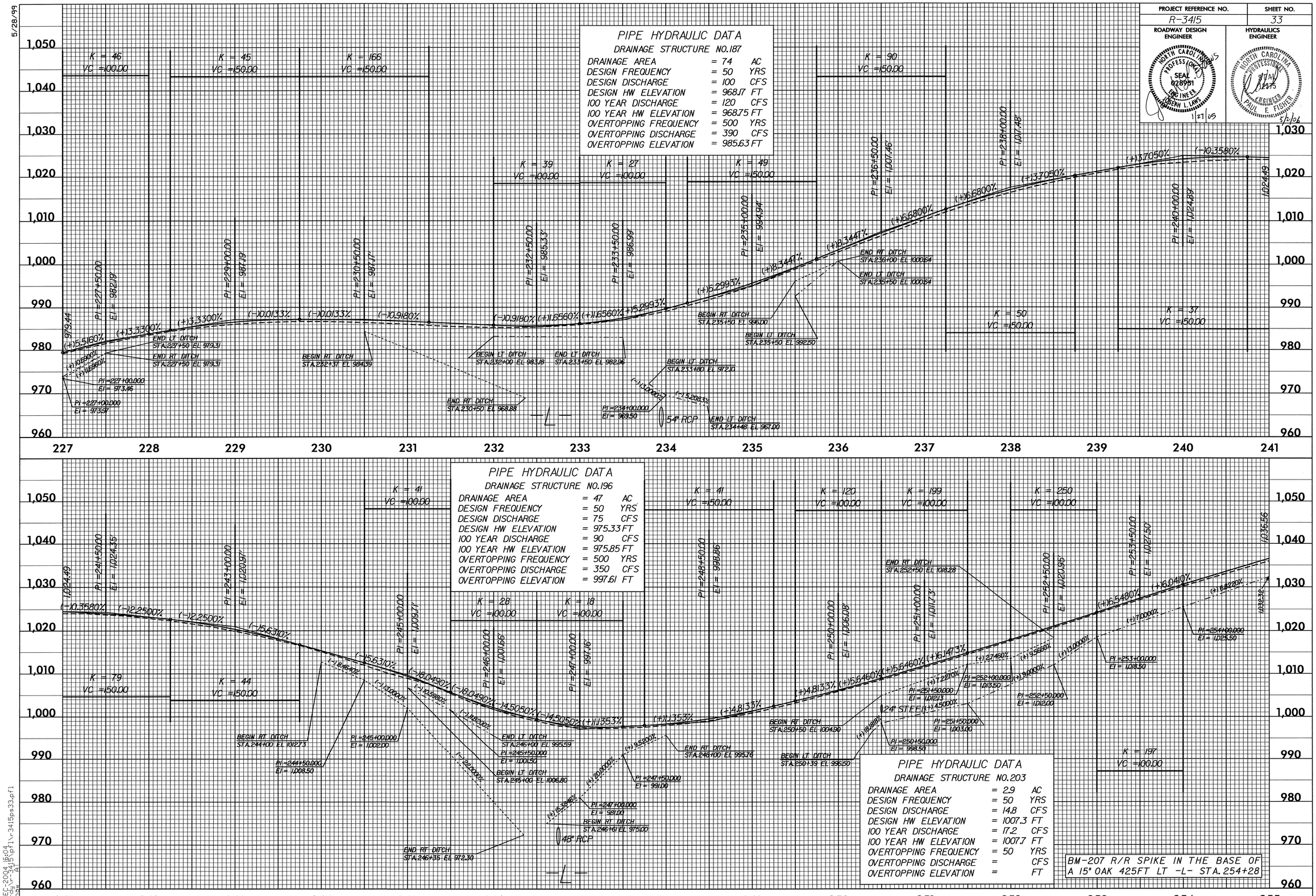

PIPE HYDRAULIC DATA

DRAINAGE STRUCTURE NO.187

DRAINAGE AREA	=	74	AC
DESIGN FREQUENCY	=	50	YRS
DESIGN DISCHARGE	=	100	CFS
DESIGN HW ELEVATION	=	968.17	FT
100 YEAR DISCHARGE	=	120	CFS
100 YEAR HW ELEVATION	=	968.75	FT
OVERTOPPING FREQUENCY	=	500	YRS
OVERTOPPING DISCHARGE	=	390	CFS
OVERTOPPING ELEVATION	=	985.63	FT

PIPE HYDRAULIC DATA

DRAINAGE STRUCTURE NO.196

DRAINAGE AREA	=	47	AC
DESIGN FREQUENCY	=	50	YRS
DESIGN DISCHARGE	=	75	CFS
DESIGN HW ELEVATION	=	975.33	FT
100 YEAR DISCHARGE	=	90	CFS
100 YEAR HW ELEVATION	=	975.85	FT
OVERTOPPING FREQUENCY	=	500	YRS
OVERTOPPING DISCHARGE	=	350	CFS
OVERTOPPING ELEVATION	=	997.61	FT

PIPE HYDRAULIC DATA

DRAINAGE STRUCTURE NO.203

DRAINAGE AREA	=	2.9	AC
DESIGN FREQUENCY	=	50	YRS
DESIGN DISCHARGE	=	14.8	CFS
DESIGN HW ELEVATION	=	1007.3	FT
100 YEAR DISCHARGE	=	17.2	CFS
100 YEAR HW ELEVATION	=	1007.7	FT
OVERTOPPING FREQUENCY	=	50	YRS
OVERTOPPING DISCHARGE	=		CFS
OVERTOPPING ELEVATION	=		FT

BM-207 R/R SPIKE IN THE BASE OF A 15" OAK 425FT LT -L- STA. 254+28

14-DEC-2004 16:04
C:\rdu\r-3415\pf1\r-3415ps33.pf1
cashow

5/28/99

PROJECT REFERENCE NO.	SHEET NO.
R-3415	34

ROADWAY DESIGN ENGINEER

NORTH CAROLINA PROFESSIONAL SEAL 028951 ENGINEER JOSEPH L. LAWS 1/27/05

HYDRAULICS ENGINEER

NORTH CAROLINA PROFESSIONAL SEAL 2175 ENGINEER PAUL F. FISHER 5/2/06

PIPE HYDRAULIC DATA

DRAINAGE STRUCTURE NO. 212

DRAINAGE AREA	=	5.1	AC
DESIGN FREQUENCY	=	50	YRS
DESIGN DISCHARGE	=	18.5	CFS
DESIGN HW ELEVATION	=	1041.7	FT
100 YEAR DISCHARGE	=	21.5	CFS
100 YEAR HW ELEVATION	=	1042.0	FT
OVERTOPPING FREQUENCY	=	10	YRS
OVERTOPPING DISCHARGE	=	10.0	CFS
OVERTOPPING ELEVATION	=	1040.5	FT

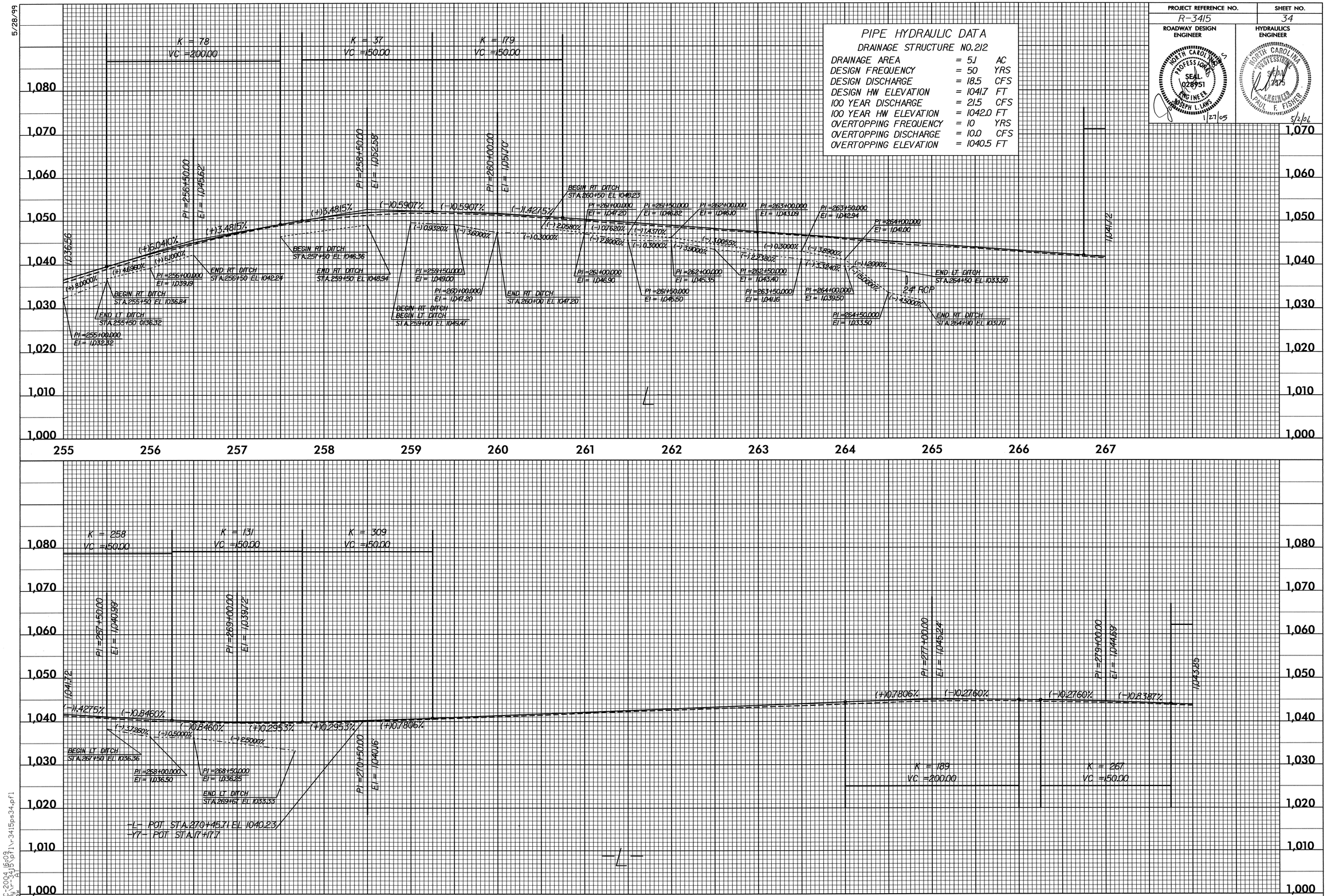

14-DEC-2004 16:09
C:\rdu\r-3415\pf1\r-3415ps34.pf1
rashow
A1

PROJECT REFERENCE NO.	SHEET NO.
R-3415	35
ROADWAY DESIGN ENGINEER	HYDRAULICS ENGINEER

NORTH CAROLINA PROFESSIONAL SEAL 028951 ENGINEER JOSEPH L. LAWS 1/27/05

NORTH CAROLINA PROFESSIONAL SEAL 11675 ENGINEER PAUL F. FISHER 5/2/06

5/28/99

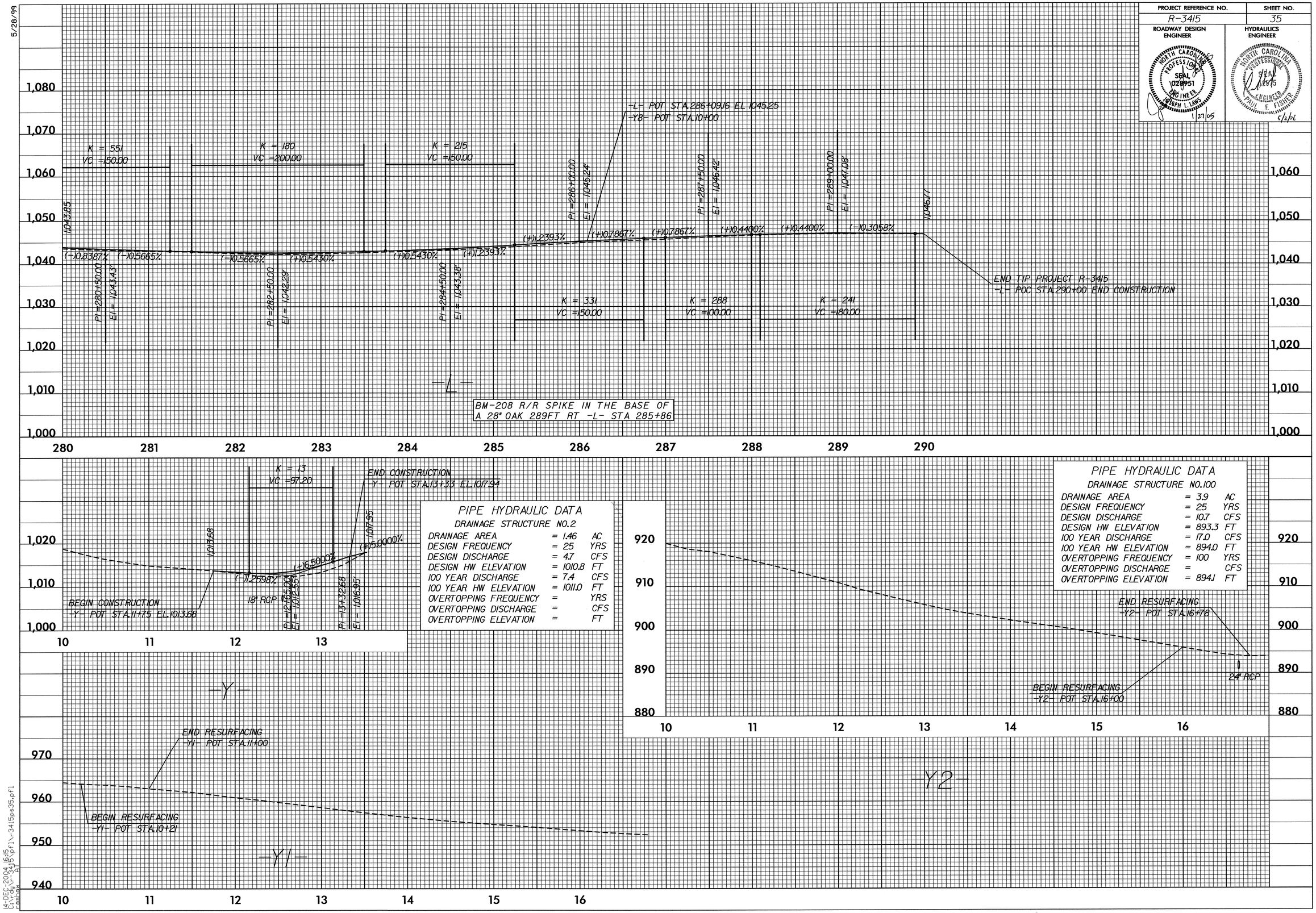

PIPE HYDRAULIC DATA

DRAINAGE STRUCTURE NO.2

DRAINAGE AREA	= 1.46	AC
DESIGN FREQUENCY	= 25	YRS
DESIGN DISCHARGE	= 4.7	CFS
DESIGN HW ELEVATION	= 1010.8	FT
100 YEAR DISCHARGE	= 7.4	CFS
100 YEAR HW ELEVATION	= 1011.0	FT
OVERTOPPING FREQUENCY	=	YRS
OVERTOPPING DISCHARGE	=	CFS
OVERTOPPING ELEVATION	=	FT

PIPE HYDRAULIC DATA

DRAINAGE STRUCTURE NO.100

DRAINAGE AREA	= 3.9	AC
DESIGN FREQUENCY	= 25	YRS
DESIGN DISCHARGE	= 10.7	CFS
DESIGN HW ELEVATION	= 893.3	FT
100 YEAR DISCHARGE	= 17.0	CFS
100 YEAR HW ELEVATION	= 894.0	FT
OVERTOPPING FREQUENCY	= 100	YRS
OVERTOPPING DISCHARGE	=	CFS
OVERTOPPING ELEVATION	= 894.1	FT

14-DEC-2004 16:15
C:\rdy\r-3415\pfl\r3415ps35.pfl
rashaw AT

5/28/99

PROJECT REFERENCE NO.	SHEET NO.
R-3415	36

ROADWAY DESIGN ENGINEER

NORTH CAROLINA PROFESSIONAL SEAL 028951 ENGINEER JOSEPH L. LAWS

1/27/05

HYDRAULICS ENGINEER

NORTH CAROLINA PROFESSIONAL SEAL 12478 ENGINEER PAUL E. FISHER

5/2/06

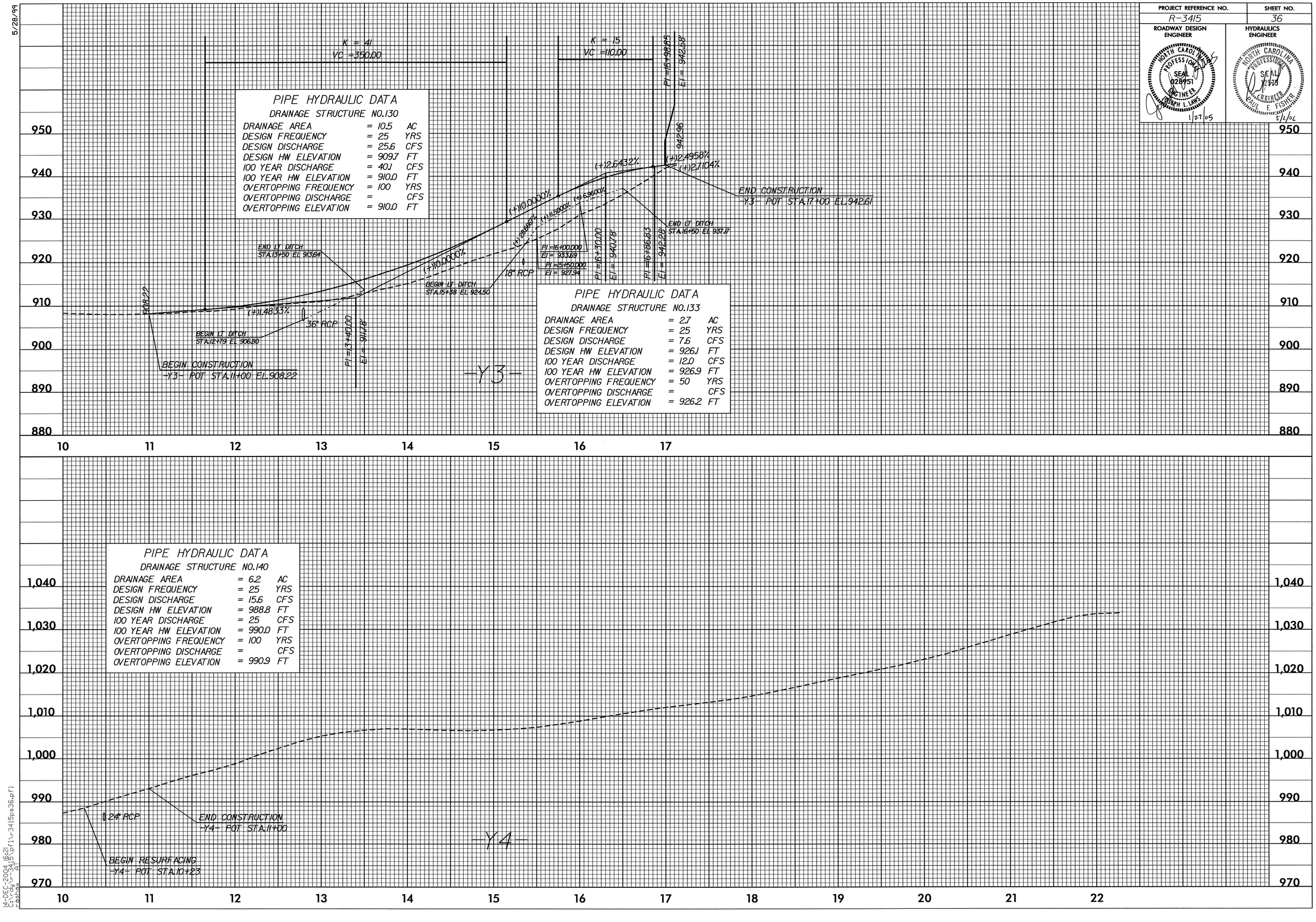

14-DEC-2004 16:21
C:\r-dly\r-3415\pfl\r-3415ps36.pfl
rashow

PROJECT REFERENCE NO.	SHEET NO.
R-3415	37

ROADWAY DESIGN ENGINEER

NORTH CAROLINA PROFESSIONAL SEAL 028951 ENGINEER JOSEPH L. LAWS

1/27/05

HYDRAULICS ENGINEER

NORTH CAROLINA PROFESSIONAL SEAL 12915 ENGINEER PAUL F. FISHER

5/2/06

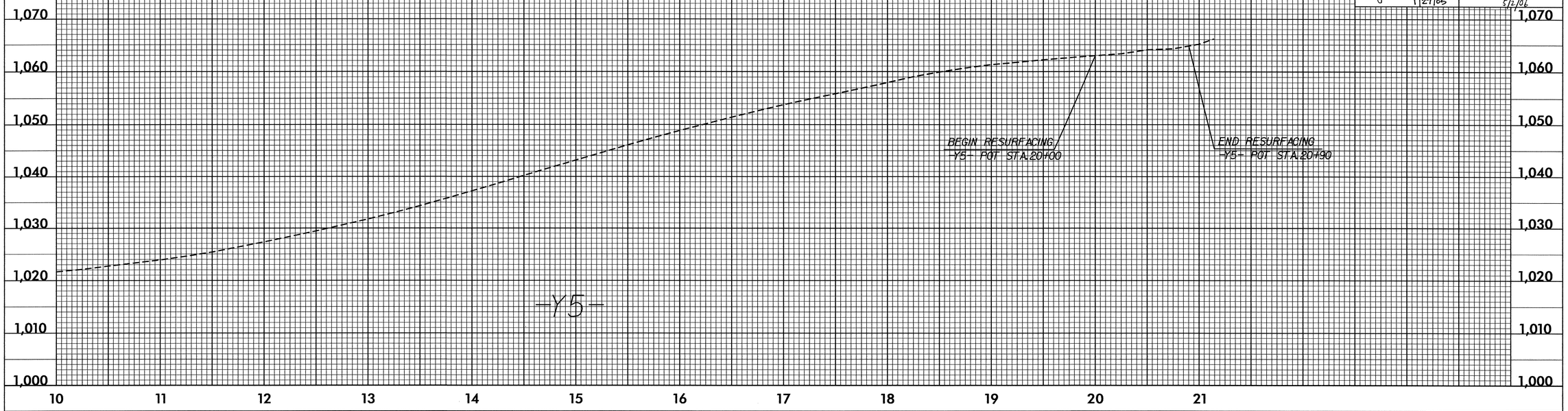

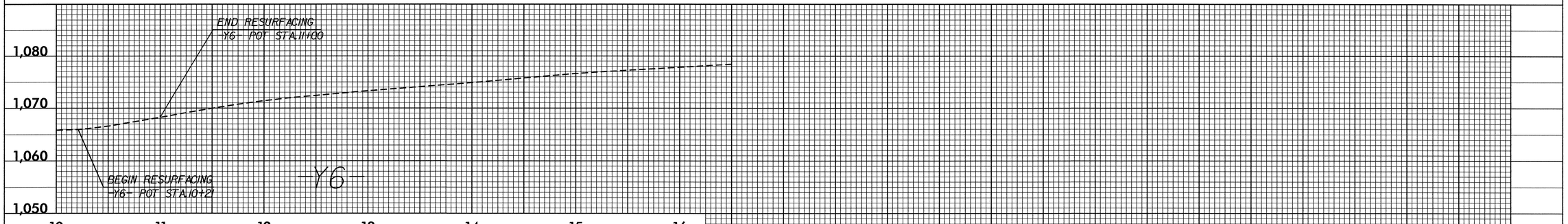

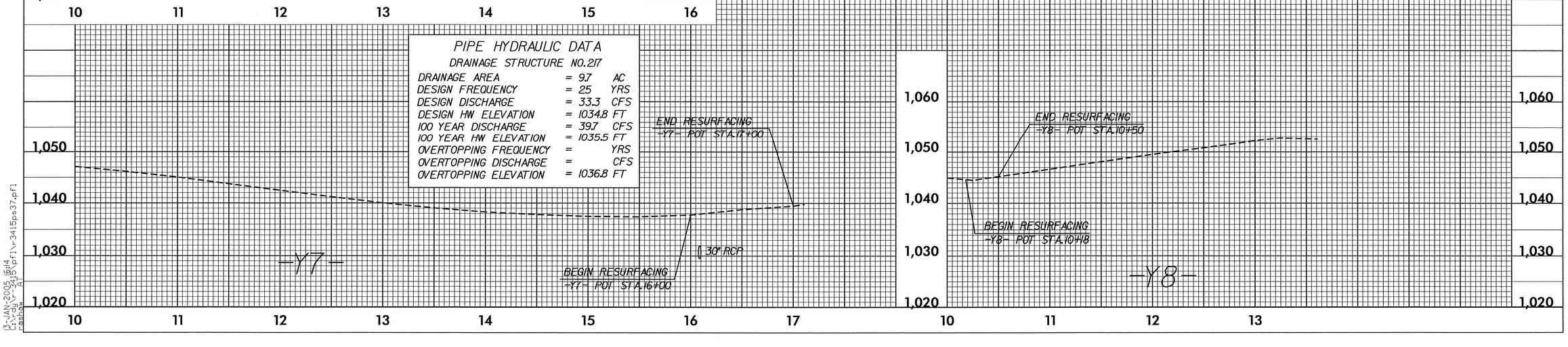

PIPE HYDRAULIC DATA

DRAINAGE STRUCTURE NO. 217

DRAINAGE AREA	= 9.7	AC
DESIGN FREQUENCY	= 25	YRS
DESIGN DISCHARGE	= 33.3	CFS
DESIGN HW ELEVATION	= 1034.8	FT
100 YEAR DISCHARGE	= 39.7	CFS
100 YEAR HW ELEVATION	= 1035.5	FT
OVERTOPPING FREQUENCY	=	YRS
OVERTOPPING DISCHARGE	=	CFS
OVERTOPPING ELEVATION	= 1036.8	FT

5/28/99

13-JAN-2005 16:14
C:\rdy\r-3415\pfl\r-3415ps37.pfl
rashow AT

5/28/99

PROJECT REFERENCE NO.	SHEET NO.
R-3415	38

ROADWAY DESIGN ENGINEER

NORTH CAROLINA PROFESSIONAL SEAL 028951 ENGINEER JOSEPH L. LAWS

11/27/05

HYDRAULICS ENGINEER

NORTH CAROLINA PROFESSIONAL SEAL 12475 ENGINEER PAUL E. FISHER

5/2/06

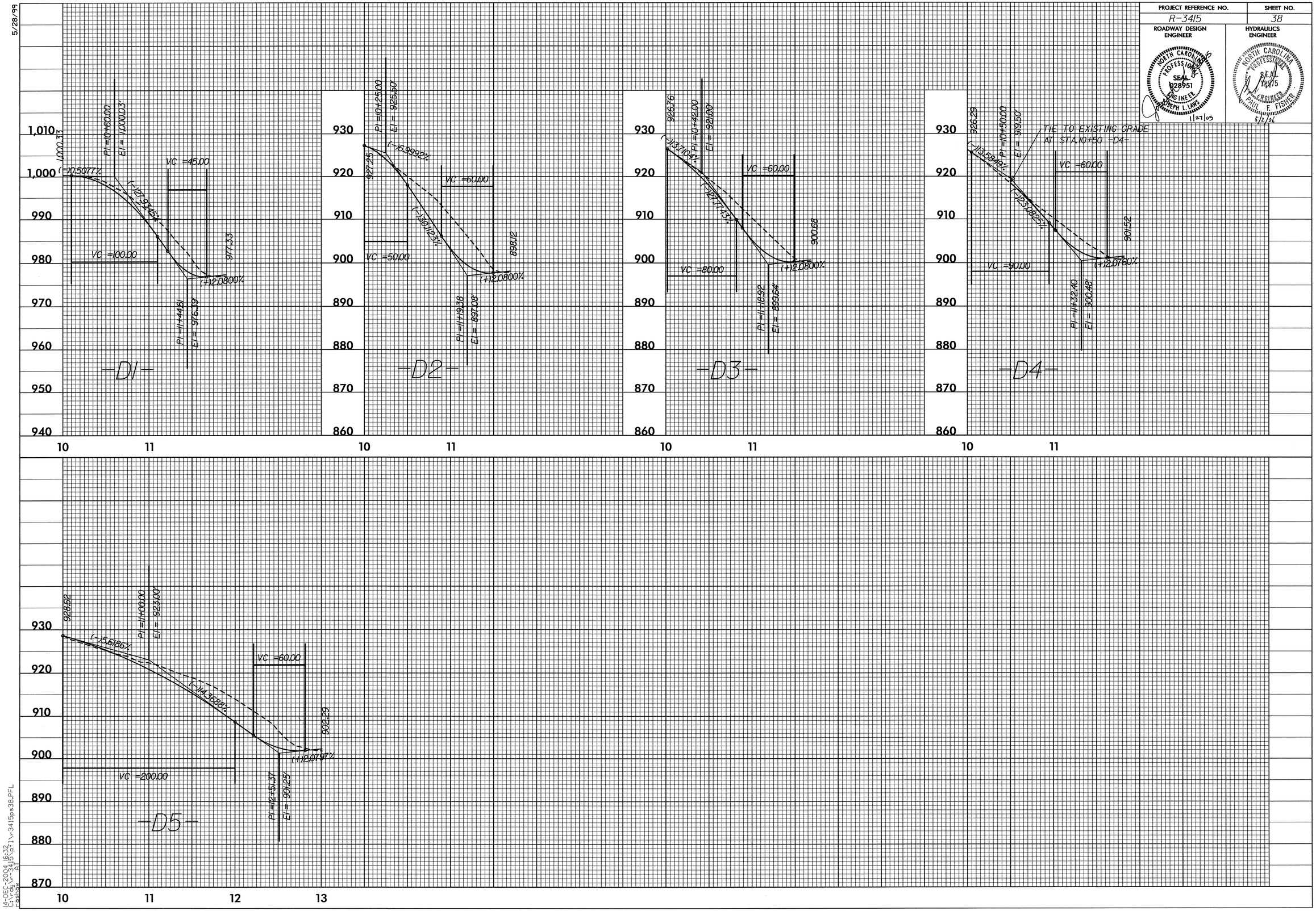

14-DEC-2004 16:32
C:\rdy\r-3415\pfl\r-3415ps38.PFL
rashaw
A1