PROJECTS: B–2848/B–1443

CONTRACT: C201180 TIP PROJECTS B–2848 & B–1443 STRUCTURES

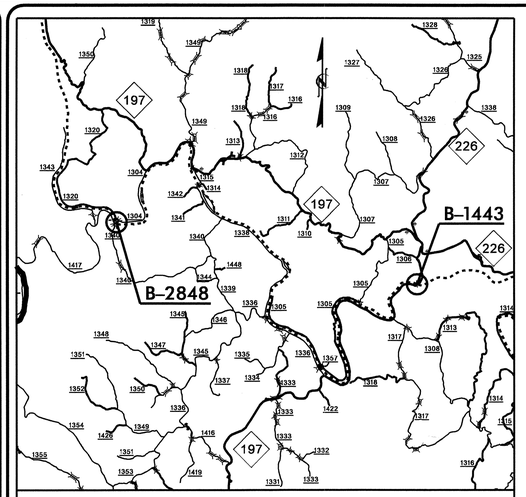


VICINITY MAP

STATE OF NORTH CAROLINA

DIVISION OF HIGHWAYS

# MITCHELL & YANCEY COUNTIES

***LOCATION: BRIDGE NO. 143 ON SR 1304 AND BRIDGE NO. 61 ON NC 197 BOTH OVER THE NORTH TOE RIVER***

***TYPE OF WORK: GRADING, PAVING, DRAINAGE, AND STRUCTURE***

| STATE | STATE PROJECT REFERENCE NO. | SHEET NO. | TOTAL SHEETS |
|---|---|---|---|
| N.C. | B–2848 /B–1443 | | |

| STATE PROJ. NO. | F. A. PROJ. NO. | DESCRIPTION |
|---|---|---|
| 32728.1.1 | BRZ–1304(4) | (B–2848) P.E. |
| 32728.2.2 | BRZ–1304(4) | (B–2848) R/W & UTIL. |
| 32728.3.2 | BRZ–1304(9) | (B–2848) CONST. |
| 32597.1.1 | BRSTP–197(1) | (B–1443) P.E. |
| 32597.2.2 | BRSTP–197(1) | (B–1443) R/W & UTIL. |
| 32597.3.2 | BRSTP–197(1) | (B–1443) CONST. |
| | | |
| | | |

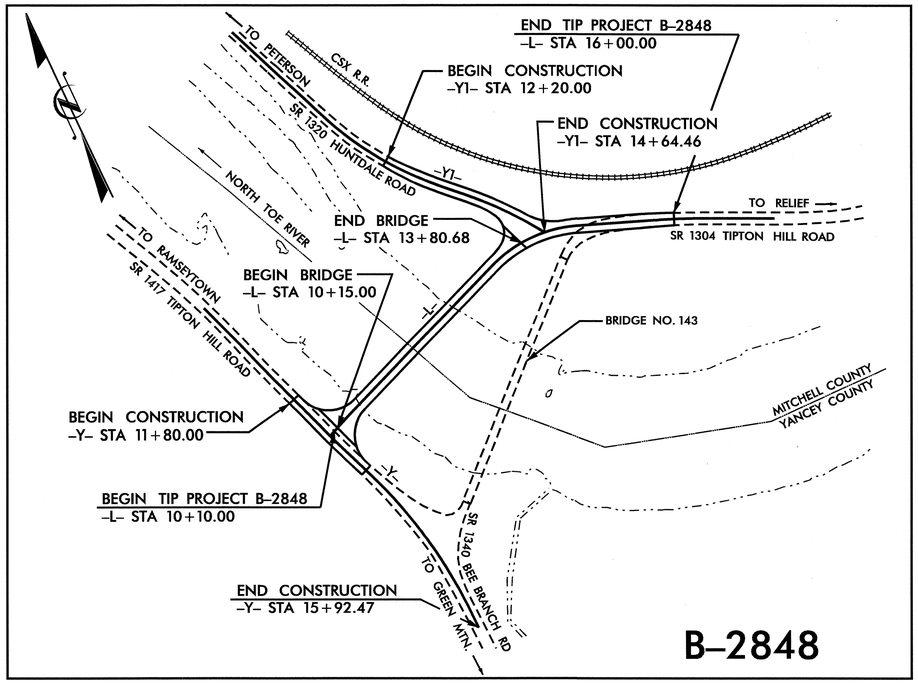


B–2848

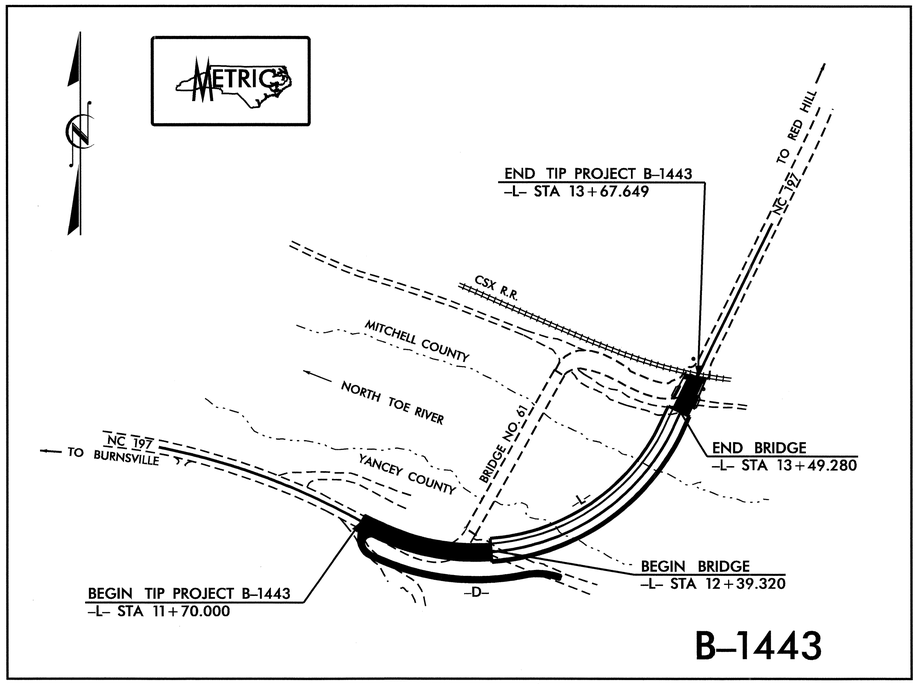


B–1443

STATE OF NORTH CAROLINA DEPARTMENT OF TRANSPORTATION

## DESIGN DATA

| B–2848 | B–1443 |
|---|---|
| ADT 2001 = 300 | ADT 2005 = 1600 |
| ADT 2025 = 500 | ADT 2025 = 2800 |
| DHV = 11 % | DHV = 9 % |
| D = 70 % | D = 55 % |
| T = 5 % * | T = 8 % * |
| V = 35 MPH** | V = 50 kmh** |
| * TTST 2 % DUAL 3 % | * TTST 2 % DUAL 6 % |

** DESIGN EXCEPTION REQUIRED

## PROJECT LENGTH

LENGTH ROADWAY TIP PROJECT B–2848 = 0.043 MI.

LENGTH STRUCTURE TIP PROJECT B–2848 = 0.069 MI.

TOTAL LENGTH TIP PROJECT B–2848 = 0.112 MI.

LENGTH ROADWAY TIP PROJECT B–1443 = 0.055 MI.

LENGTH STRUCTURE TIP PROJECT B–1443 = 0.068 MI.

TOTAL LENGTH TIP PROJECT B–1443 = 0.123 MI.

*Prepared For:*

***DIVISION OF HIGHWAYS***

*1000 Birch Ridge Dr.*
*Raleigh, NC 27610*

*2006 STANDARD SPECIFICATIONS*

*LETTING DATE :*

**FEBRUARY 20, 2007**

N. N. BULLOCK, PE
B.C. HUNT, PE
*PROJECT ENGINEERS*

A. K. PASCHAL, PE
T.G. PAYNE, PE
*PROJECT DESIGN ENGINEERS*

***STRUCTURE DESIGN UNIT***

NORTH CAROLINA PROFESSIONAL SEAL 14552 ENGINEER GREGORY R. PERFETTI

11·30·06

***DIVISION OF HIGHWAYS***
***STATE OF NORTH CAROLINA***

*P.E.*
*STATE DESIGN ENGINEER*

***DEPARTMENT OF TRANSPORTATION***
***FEDERAL HIGHWAY ADMINISTRATION***

*APPROVED*
*DIVISION ADMINISTRATOR* *DATE*

F. A. PROJECT No. BRZ-1304(9)

10+00 11+00 12+00 13+00 14+00

2080 2060 2020 2000

BEGIN GRADE
STA. 10+08.50 -L-
G.P. EL. = 2060.530

-1.3483 %

END GRADE
STA. 16+00.00 -L-
G.P. EL. = 2052.550

GRADE DATA -L-

FILL FACE @ E.B. 1
STA. 10+15.00 -L-
GRADE PT. EL. 2060.442

BEGIN FRONT SLOPE
STA. 10+01.93 -L-
EL. 2060.619

1'-0" MIN. EARTH BERM

EXP.

UNCLASSIFIED STRUCTURE EXCAVATION (SEE NOTE)

APPROX. NATURAL GROUND

1'-6"

EL. 2060±

2:1 SLOPE NORMAL TO CAP

EL. 2037±

EL. 2028±

TEMPORARY ROCK CAUSEWAY (WORKPAD)

FIX.

TOP OF DRILLER PIER EL. 2031.203

4'-6" Ø DRILLED PIER (TYP.)

64" X 43" CSP ARCH ( TYP.)

EL. 2030±

CONCRETE BARRIER SEE DETAIL "A", SHEET 4 OF 5. (TYP.)

NORMAL WATER SURFACE EL. 2030.2' (2/26/02)

HIGH WATER EL. 2052.4± 11/06/77

EL. 2028±

64" X 43" CSP ARCH ( TYP.)

EL. 2028±

TEMPORARY ROCK CAUSEWAY (WORKPAD)

FIX.

TOP OF DRILLER PIER EL. 2034.578

EL. 2036±

EL. 2034±

EL. 2033±

FILL FACE @ E.B. 2
STA. 13+80.68 -L-
GRADE PT. EL. 2055.507

BEGIN FRONT SLOPE
STA. 14+02.32 -L-
EL. 2058.748

1'-0" MIN. EARTH BERM

EXP.

1'-6"

EL. 2047±

UNCLASSIFIED STRUCTURE EXCAVATION (SEE NOTE SHEET S-3)

2:1 SLOPE NORMAL TO CAP

EL. 2047±

EL. 2050±

HP 12 X 53 STEEL PILES

UNCLASSIFIED STRUCTURE EXCAVATION (SEE NOTE SHEET S-2)

END BENT 1 BENT 1 BENT 2 END BENT 2

## SECTION ALONG -L-

SECTION THRU END BENTS AND BENTS TAKEN @ RIGHT ANGLES
TEMPORARY ROCK CAUSEWAY SHOWN @ SECTION A-A IN PLAN.

## HORIZONTAL CURVE DATA -L-

PI STA. = 13+99.65
Δ = 41°-55'-21.9" (RT.)
L = 135.36'
T = 70.87'
R = 185.00'
SE = 0.060
RO = 34.34'

1'-0" MIN. EARTH BERM EL. 2051.785

CLASS II RIP RAP

FILL FACE @ END BENT 1

TO SR 1417

W.P. #1
STA. 10+15.00 -L-

BEGIN FRONT SLOPE
STA. 10+01.93 -L-

BEGIN APPROACH SLOPE
STA. 10+09.00 -L-

TEMPORARY SHORING FOR MAINTENANCE OF TRAFFIC (SEE NOTES)

TEMPORARY ROCK CAUSEWAY (WORKPAD)

W.P. #2
STA. 11+00.00 -L-

NORTH TOE RIVER

BRIDGE I.D.
STA. 11+97.50 -L-

BENT 2 CONTROL LINE

W.P. #3
STA. 12+70.00 -L-

BENT 1 CONTROL LINE

90°-00'-00" (TYP. END BENT 1 AND BENTS 1 & 2)

3 @ 64" X 43" CSP ARCH

A A A A

CONCRETE BARRIER SEE DETAIL A, SHEET 4 OF 4

TEMPORARY ROCK CAUSEWAY (WORKPAD)

1'-0" MIN. EARTH BERM EL. 2049.974

CLASS II RIP RAP

FILL FACE @ END BENT 2

TANGENT EXTENDED SEE DETAIL B, SHEET 2 OF 4

W.P. #4
13+80.68 -L-

BEGIN FRONT SLOPE
STA. 14+02.32 -L-

END APPROACH SLAB
STA. 13+86.96 -L-

TO SR 1320

PC
STA. 13+28.78 -L-

-L-

73°-55'-36" (TAN. TO CURVE)

1'-0" MIN. EARTH BERM EL. 2045.993

85'-0" 97'-6" 170'-0" 72'-6" 110-8⅛" ( ALONG -L- )

365'-8⅛" (FILL FACE TO FILL FACE) ( ALONG -L- )

## PLAN

(PILES NOT SHOWN FOR CLARITY)

NORTH CAROLINA PROFESSIONAL SEAL 12328 ENGINEER NORMAN NEBLETT BULLOCK, JR.

NORTH CAROLINA PROFESSIONAL SEAL 37006 ENGINEER A. KEITH PASCHAL 11/29/06

PROJECT NO. B-2848
YANCEY/MITCHELL COUNTY
STATION: 11+97.50 -L-

SHEET 1 OF 4 REPLACES BRIDGE NO. 143

STATE OF NORTH CAROLINA
DEPARTMENT OF TRANSPORTATION
RALEIGH

# GENERAL DRAWING

FOR BRIDGE ON SR 1304
OVER NORTH TOE RIVER
BETWEEN SR 1417 & SR 1320

| REVISIONS | | | | | | SHEET NO. |
|---|---|---|---|---|---|---|
| NO. | BY: | DATE: | NO. | BY: | DATE: | S-1 |
| 1 | | | 3 | | | TOTAL SHEETS |
| 2 | | | 4 | | | 91 |

DRAWN BY : V.X.N. / K.M.M. DATE : 1/20/04
CHECKED BY : A. K. PASCHAL DATE : 12/5/04

27-NOV-2006 12:33
R:\Structures\ameadows\FINAL PLANS\B2848_sd_GD_01.dgn
kpaschal

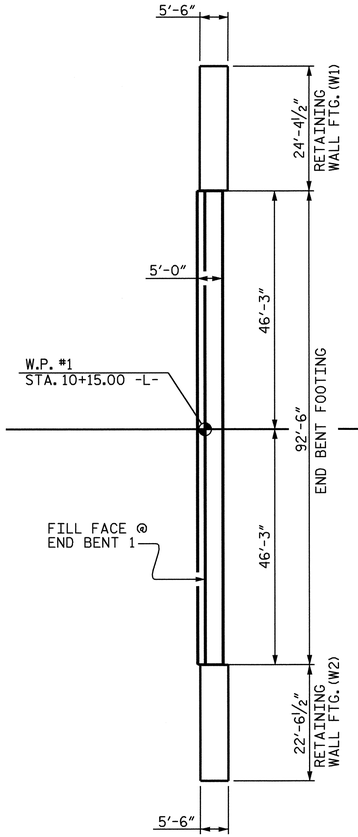


END BENT 1

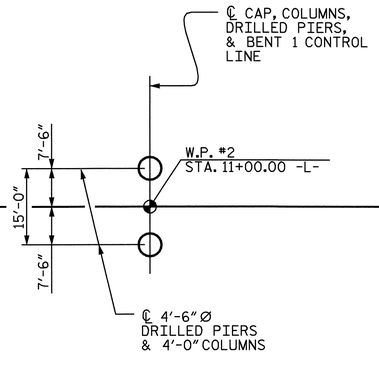


BENT 1

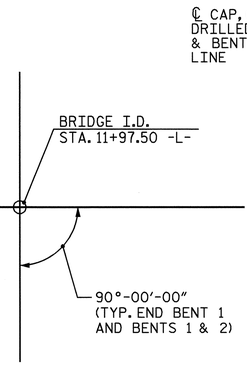


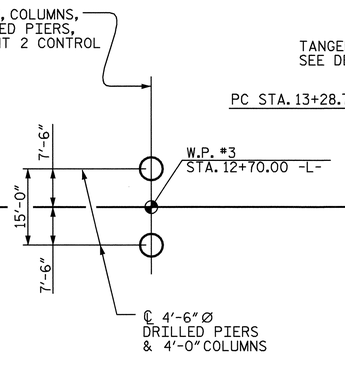


BENT 2

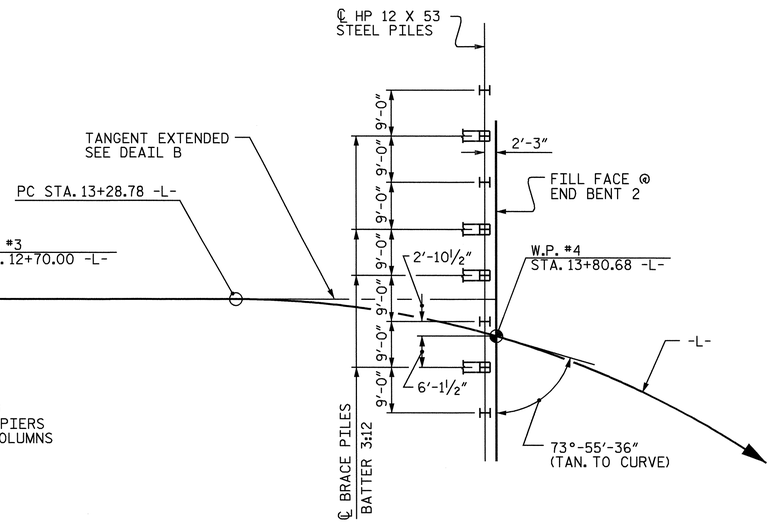


END BENT 2

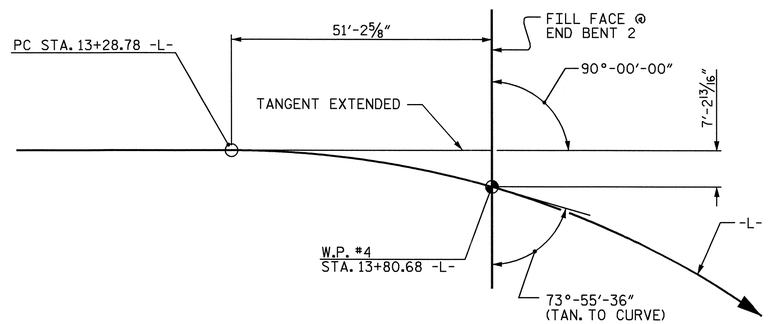


## DETAIL B

## FOUNDATION LAYOUT PLAN

PILE LOCATION IS TO CENTERLINE PILE.
BENT 1 & BENT 2 HAVE DRILLED PIERS.

## FOUNDATION NOTES

DRILLED PIERS AT BENT NO. 1 AND BENT NO. 2 HAVE BEEN DESIGNED FOR BOTH SKIN FRICTION AND END BEARING. CHECK FIELD CONDITIONS FOR THE REQUIRED END BEARING CAPACITY OF 90 TSF.

DRILLED PIERS AT BENT NO. 1 AND BENT NO. 2 ARE DESIGNED FOR AN APPLIED LOAD OF 339 TONS EACH AT THE TOP OF THE COLUMN.

PERMANENT STEEL CASING IS REQUIRED FOR DRILLED PIERS AT BENT NO. 1. DO NOT EXTEND THE CASING BELOW ELEVATION 2025 FT. WITHOUT PRIOR APPROVAL FROM THE ENGINEER. SEE DRILLED PIERS SPECIAL PROVISION.

PERMANENT STEEL CASING MAY BE REQUIRED FOR DRILLED PIERS AT BENT NO. 2. IF REQUIRED, DO NOT EXTEND THE CASING BELOW ELEVATION 2025 FT. WITHOUT PRIOR APPROVAL FROM THE ENGINEER. THE ENGINEER WILL DETERMINE THE NEED FOR PERMANENT STEEL CASING. SEE DRILLED PIERS SPECIAL PROVISION.

DRILLED PIERS AT BENT NO. 1 SHALL EXTEND TO AN ELEVATION NO HIGHER THAN 2017 FT., SATISFY THE REQUIRED END BEARING CAPACITY, AND HAVE A MINIMUM PENETRATION OF 8 FT. INTO ROCK AS DEFINED BY THE DRILLED PIERS SPECIAL PROVISION.

DRILLED PIERS AT BENT NO. 2 SHALL EXTEND TO AN ELEVATION NO HIGHER THAN 2017 FT. AND SATISFY THE REQUIRED END BEARING CAPACITY.

FOR DRILLED PIERS, SEE DRILLED PIERS SPECIAL PROVISION.

CSL TUBES ARE REQUIRED AND CSL TESTING MAY BE REQUIRED FOR THE DRILLED PIERS. THE ENGINEER WILL DETERMINETHE NEED FOR CSL TESTING. SEE CROSSHOLE SONIC LOGGING SPECIAL PROVISION.

THE LOCATION OF THE CONSTRUCTION JOINT IN THE DRILLED PIERS AT BENT 2 IS BASED ON AN APPROXIMATE GROUND LINE ELEVATION. IF THE CONSTRUCTION JOINT IS ABOVE THE ACTUAL GROUND ELEVATION, THE CONTRACTOR SHALL PLACE THE CONSTRUCTION JOINT 1 FOOT BELOW THE GROUND LINE.

SPT TESTING IS NOT REQUIRED TO DETERMINE THE END BEARING CAPACITY OF THE DRILLED PIERS AT BENT NO. 1 AND BENT NO. 2.

DO NOT USE SLURRY CONSTRUCTION FOR THIS PROJECT.

SID INSPECTIONS MAY BE REQUIRED TO INSPECT THE BOTTOM CLEANLINESS OF THE DRILLED PIERS. THE ENGINEER WILL DETERMINE THE NEED FOR SID INSPECTIONS. SEE DRILLED PIERS SPECIAL PROVISION.

THE ALLOWABLE BEARING CAPACITY FOR PILES AT END BENT NO. 2 IS 50 TONS PER PILE.

STEEL PILE POINTS ARE REQUIRED FOR PILES AT END BENT NO. 2. SEE SECTION 450 OF THE STANDARD SPECIFICATIONS.

DRIVE PILES AT END BENT NO. 2 TO A REQUIRED BEARING CAPACITY OF 100 TONS PER PILE. THE REQUIRED BEARING CAPACITY IS EQUAL TO THE ALLOWABLE BEARING CAPACITY WITH A MINIMUM FACTOR OF SAFETY OF TWO.

THE REQUIRED BEARING CAPACITY FOR THE SPREAD FOOTING AT END BENT NO. 1 IS 15 TSF. CHECK FIELD CONDITIONS FOR THE REQUIRED END BEARING CAPACITY JUST PRIOR TO PLACING CONCRETE.

KEY (CARRY IN) FOOTING AT LEAST 12 INCHES INTO ROCK WITH A MINIMUM THICKNESS AS SHOWN ON THE PLANS.

THE SCOUR CRITICAL ELEVATIONS FOR BENT NO. 1 AND BENT NO. 2 ARE 2022FT. THE SCOUR CRITICAL ELEVATIONS ARE FOR USE BY MAINTENANCE FORCES TO MONITOR POSSIBLE SCOUR PROBLEMS DURING THE LIFE OF THE STRUCTURE.

EXCAVATE EXISTING SOIL AT END BENT 2 TO ELEVATION 2040 FT. FROM THE FACE OF THE SLOPE TO 4 (FOUR) FEET BEHIND END BENT CAP FOR THE LENGTH OF THE END BENT CAP PLUS AN ADDITIONAL 5 FEET ON EACH END OF OF CAP AND REPLACE WITH BORROW MATERIAL. THIS EXCAVATION SHALL BE PAID FOR AS UNCLASSIFIED STRUCTURE EXCAVATION.

OBSERVE A ONE MONTH WAITING PERIOD AFTER CONSTRUCTING THE ENBANKMENT, END BENT AND REINFORCED BRIDGE APPROACH FILL, WHEN APPLICABLE, BEFORE BEGINNING APPROACH SLAB CONSTRUCTION AT END BENT 2 .

FOR DESIGN OF TEMPORARY SOIL NAIL WALL, USE THE FOLLOWING SOIL PARAMETERS :
UNIT WEIGHT OF SOIL ABOVE WATER TABLE = 120 pcf
UNIT WEIGHT OF SOIL BELOW WATER TABLE = 60 pcf
FRICTION ANGLE = 30°
COHESION = 0 psf

NORTH CAROLINA PROFESSIONAL SEAL 22005 ENGINEER A. K. KEITH PASCHAL
11/29/06

PROJECT NO. B-2848
YANCEY/MITCHELL COUNTY
STATION: 11+97.50 -L-

SHEET 2 OF 4

STATE OF NORTH CAROLINA
DEPARTMENT OF TRANSPORTATION
RALEIGH

GENERAL DRAWING

FOR BRIDGE ON SR 1304
OVER NORTH TOE RIVER
BETWEEN SR 1417 AND SR 1320

| REVISIONS | | | | | | SHEET NO. |
|---|---|---|---|---|---|---|
| NO. | BY: | DATE: | NO. | BY: | DATE: | S-2 |
| 1 | | | 3 | | | TOTAL SHEETS |
| 2 | | | 4 | | | 91 |

DRAWN BY : K. McCAULEY DATE : 5/17/04
CHECKED BY : A. K. PASCHAL DATE : 12/5/04

27-NOV-2006 12:33
R:\Structures\ameadows\FINAL PLANS\B2848_sd_GD_01.dgn
kpaschal

# TOTAL BILL OF MATERIAL

| | CONSTRUCTION, MAINTENANCE, AND REMOVAL OF TEMPORARY ACCESS | REMOVAL OF EXISTING STRUCTURE | FOUNDATION EXCAVATION | 4'-6" Ø DRILLED PIERS IN SOIL | 4'-6" Ø DRILLED PIERS NOT IN SOIL | PERMANENT STEEL CASING FOR 4'-6" Ø DRILLED PIER | SID INSPECTION | CROSSHOLE SONIC LOGGING | UNCLASSIFIED STRUCTURE EXCAVATION | REINFORCED CONCRETE DECK SLAB | GROOVING BRIDGE FLOORS | CLASS A CONCRETE | BRIDGE APPROACH SLABS | REINFORCING STEEL | SPIRAL COLUMN REINFORCING STEEL | STRUCTURAL STEEL | HP 12 X 53 STEEL PILES | | STEEL PILE POINTS | CONCRETE BARRIER RAIL |
|---|---|---|---|---|---|---|---|---|---|---|---|---|---|---|---|---|---|---|---|---|
| | LUMP SUM | LUMP SUM | LUMP SUM | LIN. FT. | LIN. FT. | LIN. FT. | EA. | EA. | CU. YDS. | SQ. FT. | SQ. FT. | CU. YDS. | LUMP SUM | LBS. | LBS. | APPROX. LB. | NO. | LIN.FT. | EA. | LIN. FT. |
| SUPERSTRUCTURE | | | | | | | | | | 10,872 | 8,494 | | LUMP SUM | | | 483,600 | | | | 760.98 |
| END BENT 1 | | | LUMP SUM | | | | | | 35 | | | 118.2 | | 12707 | | | | | | |
| BENT 1 | | | | 12.5 | 16.0 | 12.4 | | 1 | | | | 34.9 | | 8733 | 1815 | | | | | |
| BENT 2 | | | | 19.2 | 16.0 | 19.2 | | 1 | | | | 29.6 | | 8371 | 1660 | | | | | |
| END BENT 2 | | | | | | | | | 626 | | | 39.3 | | 6268 | | | 8 | 160.0 | 8 | |
| | | | | | | | | | | | | | | | | | | | | |
| TOTAL | LUMP SUM | LUMP SUM | LUMP SUM | 31.7 | 32.0 | 31.6 | 1 | 2 | 661 | 10,872 | 8,494 | 222.0 | LUMP SUM | 36,079 | 3,475 | 483,600 | 8 | 160.0 | 8 | 760.98 |

| | RIP RAP CLASS II (2'-0" THICK) | FILTER FABRIC FOR DRAINAGE | POT BEARINGS | ELASTOMERIC BEARINGS | EVAZOTE JOINT SEALS | STRUCTURE DRAINAGE SYSTEM |
|---|---|---|---|---|---|---|
| | TONS | SQ. YDS. | LUMP SUM | LUMP SUM | LUMP SUM | LUMP SUM |
| SUPERSTRUCTURE | | | LUMP SUM | LUMP SUM | LUMP SUM | LUMP SUM |
| END BENT 1 | 196 | 218 | | | | |
| BENT 1 | | | | | | |
| BENT 2 | | | | | | |
| END BENT 2 | 333 | 370 | | | | |
| | | | | | | |
| TOTAL | 529 | 588 | LUMP SUM | LUMP SUM | LUMP SUM | LUMP SUM |

BM #2 : 131.34' LT. STA. 18+54.22 -BY1- EL. 2059.66

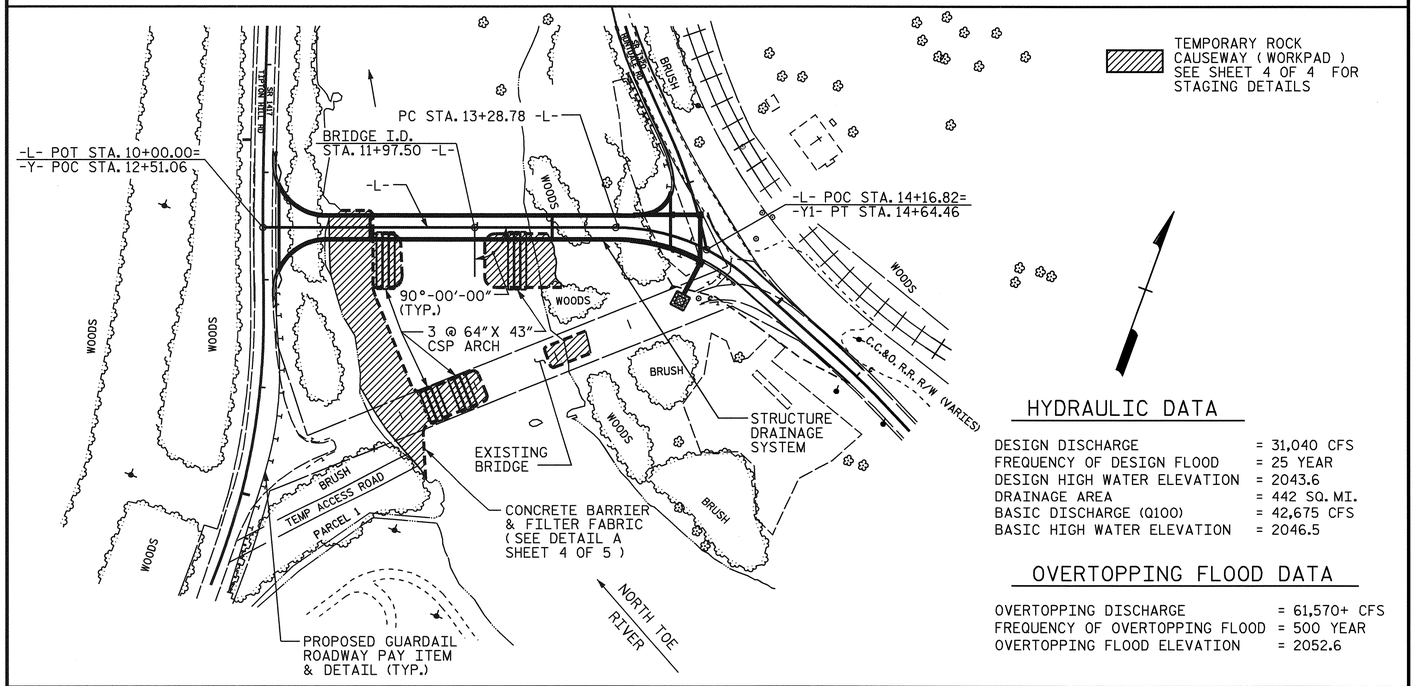


## HYDRAULIC DATA

| | |
|---|---|
| DESIGN DISCHARGE | = 31,040 CFS |
| FREQUENCY OF DESIGN FLOOD | = 25 YEAR |
| DESIGN HIGH WATER ELEVATION | = 2043.6 |
| DRAINAGE AREA | = 442 SQ. MI. |
| BASIC DISCHARGE (Q100) | = 42,675 CFS |
| BASIC HIGH WATER ELEVATION | = 2046.5 |

## OVERTOPPING FLOOD DATA

| | |
|---|---|
| OVERTOPPING DISCHARGE | = 61,570+ CFS |
| FREQUENCY OF OVERTOPPING FLOOD | = 500 YEAR |
| OVERTOPPING FLOOD ELEVATION | = 2052.6 |

## LOCATION SKETCH

FOR UTILITY INFORMATION, SEE UTILITY PLANS AND SPECIAL PROVISIONS.

DRAWN BY : K. McCAULEY DATE : 1/21/04
CHECKED BY : A. K. PASCHAL DATE : 1/23/04

## NOTES

ASSUMED LIVE LOAD = HS 20 OR ALTERNATE LOADING, EXCEPT THAT THE GIRDERS HAVE BEEN DESIGNED FOR HS 25.

FOR OTHER DESIGN DATA AND GENERAL NOTES, SEE SHEET SN.

FOR EROSION CONTROL MEASURES SEE EROSION CONTROL PLANS.

THIS BRIDGE HAS BEEN DESIGNED BY THE STRENGTH DESIGN METHOD AS SPECIFIED IN AASHTO STANDARD SPECIFICATIONS.

ALL STRUCTURAL STEEL SHALL BE AASHTO M270 GRADE 50W AND PAINTED IN ACCORDANCE WITH SYSTEM 4 OF ARTICLE 442-7 OF THE STANDARD SPECIFICATIONS UNLESS OTHERWISE NOTED ON THE PLANS.

REMOVABLE FORMS MAY BE USED IN LIEU OF METAL STAY-IN-PLACE FORMS IN ACCORDANCE WITH ARTICLE 420-3 OF THE STANDARD SPECIFICATIONS.

THE EXISTING STRUCTURE CONSISTING OF 1 SPAN @ 68'-6", 1 SPAN @ 75'-0", 1 SPAN @ 80'-0", 1 SPAN @ 75'-0", AND 1 SPAN @ 68'-6" REINFORCED CONCRETE EARTH FILLED ARCHES, 12'-0" CLEAR ROADWAY WIDTH REINFORCED CONCRETE ARCHED DECK WITH REINFORCED CONCRETE ABUTMENTS AND PIERS, AND LOCATED UPSTREAM OF THE PROPOSED STRUCTURE SHALL BE REMOVED. SEE SPECIAL PROVISIONS FOR REMOVAL OF EXISTING STRUCTURE @ STA. 11+97.50 -L-.

REMOVAL OF THE EXISTING BRIDGE SHALL BE PERFORMED SO AS TO MINIMIZE THE AMOUNT OF DEBRIS TO FALL INTO THE WATER. THE CONTRACTOR SHALL REMOVE THE BRIDGE AND SUBMIT PLANS FOR DEMOLITION IN ACCORDANCE WITH ARTICLE 402-2 OF THE STANDARD SPECIFICATIONS AND THE SPECIAL PROVISION FOR "REMOVAL OF EXISTING STRUCTURE @ STA. 11+97.50 -L-".

THE MATERIAL SHOWN IN THE CROSS-HATCHED AREA SHALL BE EXCAVATED FOR A DISTANCE OF 70 FT. EACH SIDE OF THE CENTERLINE OF ROADWAY AT END BENT 1, AND 50 FT. LEFT AND 30 FT. RIGHT OF THE CENTERLINE OF ROADWAY AT END BENT 2 AS DIRECTED BY THE ENGINEER. THIS WORK WILL BE MEASURED AND PAID FOR AT THE CONTRACT UNIT PRICE PER CUBIC YARD FOR UNCLASSIFIED STRUCTURE EXCAVATION.

NEEDLE BEAMS WILL NOT BE ALLOWED UNLESS OTHERWISE CALLED FOR ON THE PLANS OR APPROVED BY THE ENGINEER.

FOR TEMPORARY ROCK CAUSEWAYS (WORKPADS), SEE SPECIAL PROVISIONS FOR CONSTRUCTION, MAINTENANCE, AND REMOVAL OF TEMPORARY ACCESS AT STATION 11+97.50 -L-.

ACCESS TO THE CAUSEWAY WILL BE PROVIDED, AS SHOWN ON THE LOCATION SKETCH, EAST OF THE EXISTING BRIDGE THROUGH PARCEL 1 (SEE ROADWAY PLANS FOR PARCEL 1). THE ACCESS ROAD IS TO BE CONSTRUCTED OF CLEAN STONE MATERIAL AND SHALL NOT ENCROACH INTO THE ADJACENT STREAM. PAYMENT FOR THE ACCESS ROAD IS INCIDENTAL TO THE LUMP SUM PAY ITEM FOR CONSTRUCTION, MAINTENANCE, AND REMOVAL OF TEMPORARY ACCESS AT STA 11+97.50 -L-.

THE CLASS AA CONCRETE IN THE BRIDGE DECK SHALL CONTAIN FLY ASH OR GROUND GRANULATED BLAST FURNACE SLAG AT THE SUBSTITUTION RATE SPECIFIED IN ARTICLE 1024-1 AND IN ACCORDANCE WITH ARTICLES 1024-5 AND 1024-6 OF STANDARD SPECIFICATIONS. NO PAYMENT WILL BE MADE FOR THIS SUBSTITUTION AS IT IS CONSIDERED INCIDENTAL TO THE COST OF THE REINFORCED CONCRETE DECK SLAB.

THIS STRUCTURE HAS BEEN DESIGNED IN ACCORDANCE WITH HEC 18, "EVALUATING SCOUR AT BRIDGES", NOVEMBER, 1995.

THIS BRIDGE HAS BEEN DESIGNED IN ACCORDANCE WITH THE REQUIREMENTS OF THE AASHTO STANDARD SPECIFICATIONS FOR SEISMIC DESIGN OF HIGHWAY BRIDGES FOR SEISMIC PERFORMANCE CATEGORY B.

THE CONTRACTOR SHALL PROVIDE INDEPENDENT ASSURANCE SAMPLES OF REINFORCING STEEL AS FOLLOWS: FOR PROJECTS REQUIRING UP TO 400 TONS OF REINFORCING STEEL, ONE 30 INCH SAMPLE OF EACH SIZE BAR USED, AND FOR PROJECTS REQUIRING OVER 400 TONS OF REINFORCING STEEL, TWO 30 INCH SAMPLE OF EACH SIZE BAR USED. THE BARS FROM WHICH THE SAMPLES ARE TAKEN MUST THEN BE SPLICED WITH REPLACEMENT BARS OF THE SIZE AND LENGTH OF THE SAMPLE, PLUS A MINIMUM LAP SPLICE OF THIRTY BAR DIAMETERS.

FOR LIMITS OF TEMPORARY SHORING FOR MAINTENANCE OF TRAFFIC, SEE TRAFFIC CONTROL PLANS. FOR PAY ITEM FOR TEMPORARY SHORING FOR MAINTENANCE OF TRAFFIC, SEE ROADWAY PLANS.

FOR SUBMITTAL OF WORKING DRAWINGS, SEE SPECIAL PROVISIONS.

FOR FALSEWORK AND FORMWORK, SEE SPECIAL PROVISIONS.

FOR CRANE SAFETY, SEE SPECIAL PROVISIONS.

FOR SHIPPING STEEL STRUCTURAL MEMBERS, SEE SPECIAL PROVISIONS.

FOR GROUT FOR STRUCTURES, SEE SPECIAL PROVISIONS.

NORTH CAROLINA PROFESSIONAL SEAL 20008 ENGINEER A. KEITH PASCHAL
2/12/07

PROJECT NO. B-2848
YANCEY/MITCHELL COUNTY
STATION: 11+97.50 -L-

SHEET 3 OF 4

STATE OF NORTH CAROLINA
DEPARTMENT OF TRANSPORTATION
RALEIGH

# GENERAL DRAWING

FOR BRIDGE ON SR 1304
OVER NORTH TOE RIVER
BETWEEN SR 1417 & SR 1320

| REVISIONS | | | | | | SHEET NO. |
|---|---|---|---|---|---|---|
| NO. | BY: | DATE: | NO. | BY: | DATE: | S-3 |
| 1 | | | 3 | | | TOTAL SHEETS |
| 2 | | | 4 | | | 91 |

12-FEB-2007 15:30
R:\Structures\ameadows\FINAL PLANS\B2848_sd_GD_01.dgn
kpaschal

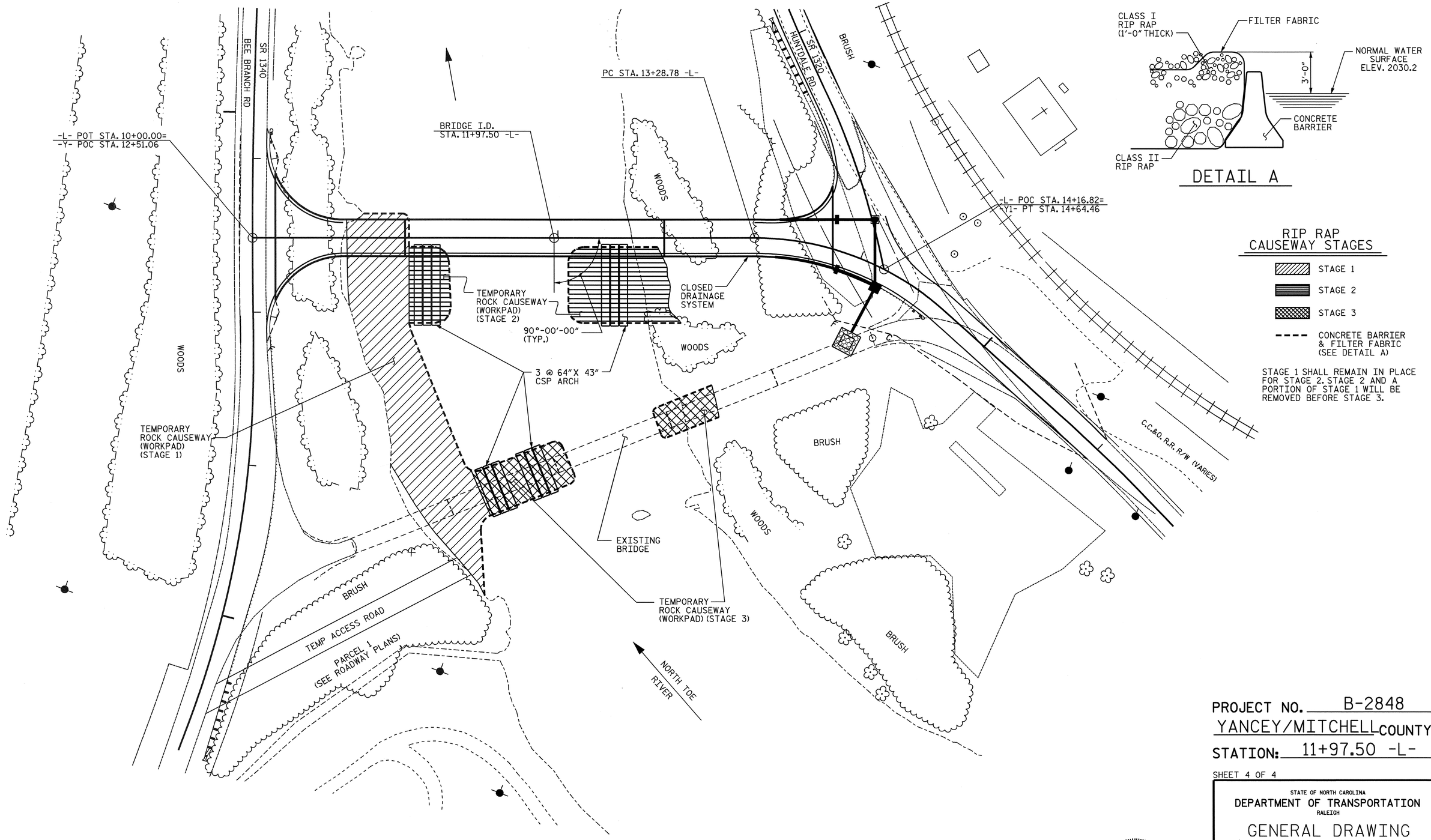





DETAIL A

## RIP RAP CAUSEWAY STAGES

- STAGE 1
- STAGE 2
- STAGE 3
- CONCRETE BARRIER & FILTER FABRIC (SEE DETAIL A)

STAGE 1 SHALL REMAIN IN PLACE FOR STAGE 2. STAGE 2 AND A PORTION OF STAGE 1 WILL BE REMOVED BEFORE STAGE 3.

PLAN OF CAUSEWAYS

DRAWN BY : E.G. ALLEN DATE : 1/21/04
CHECKED BY : A.K. PASCHAL DATE : 1/23/04

12-FEB-2007 14:55
R:\Structures\ameadows\FINAL PLANS\B2848_sd_GD_01.dgn
kpaschal

PROJECT NO. B-2848
YANCEY/MITCHELL COUNTY
STATION: 11+97.50 -L-

SHEET 4 OF 4

STATE OF NORTH CAROLINA
DEPARTMENT OF TRANSPORTATION
RALEIGH

GENERAL DRAWING

FOR BRIDGE ON SR 1304
OVER NORTH TOE RIVER
BETWEEN SR 1417 AND SR 1320

NORTH CAROLINA PROFESSIONAL SEAL 22005 ENGINEER A. KEITH PASCHAL
2/21/07

| REVISIONS | | | | | | SHEET NO. |
|---|---|---|---|---|---|---|
| NO. | BY: | DATE: | NO. | BY: | DATE: | S-4 |
| 1 | | | 3 | | | TOTAL SHEETS |
| 2 | | | 4 | | | 91 |

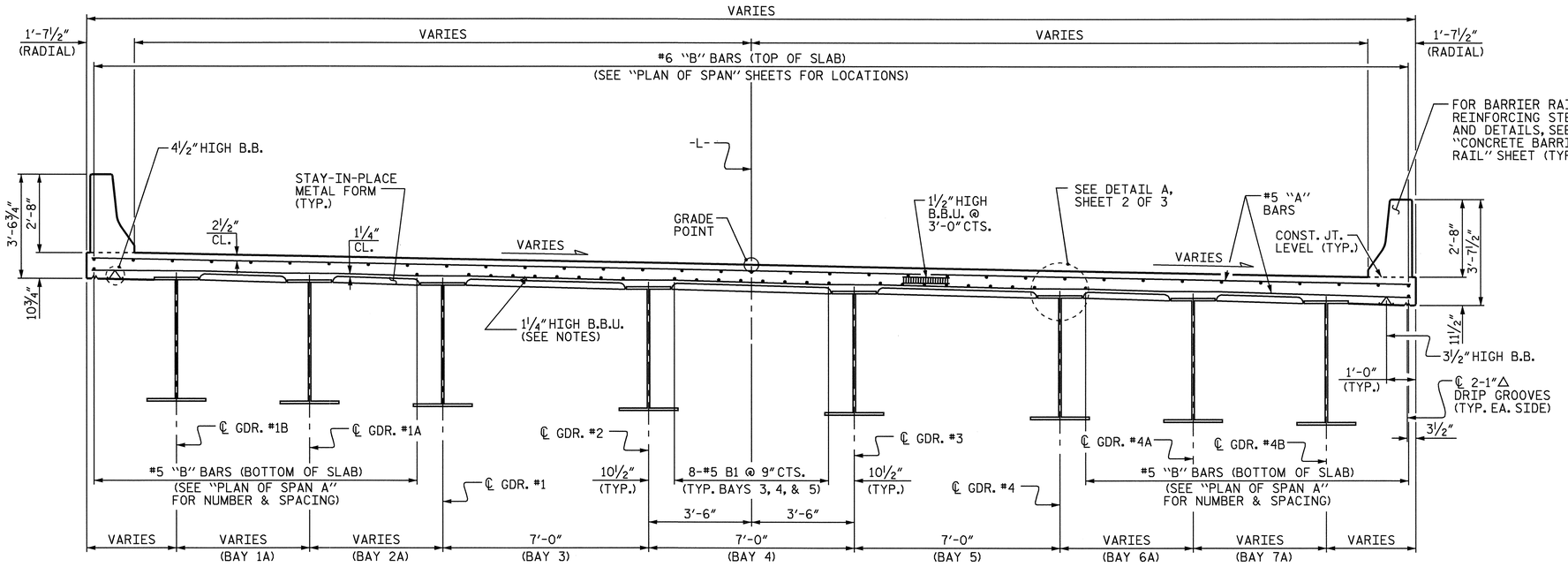


## SECTION A-A

(SEE "PLAN OF SPAN A" FOR LOCATION OF SECTION A-A)

NOTE:
FOR END BENT & INTERMEDIATE DIAPHRAGM DETAILS NOT SHOWN, SEE "STRUCTURAL STEEL DETAILS" SHEETS.

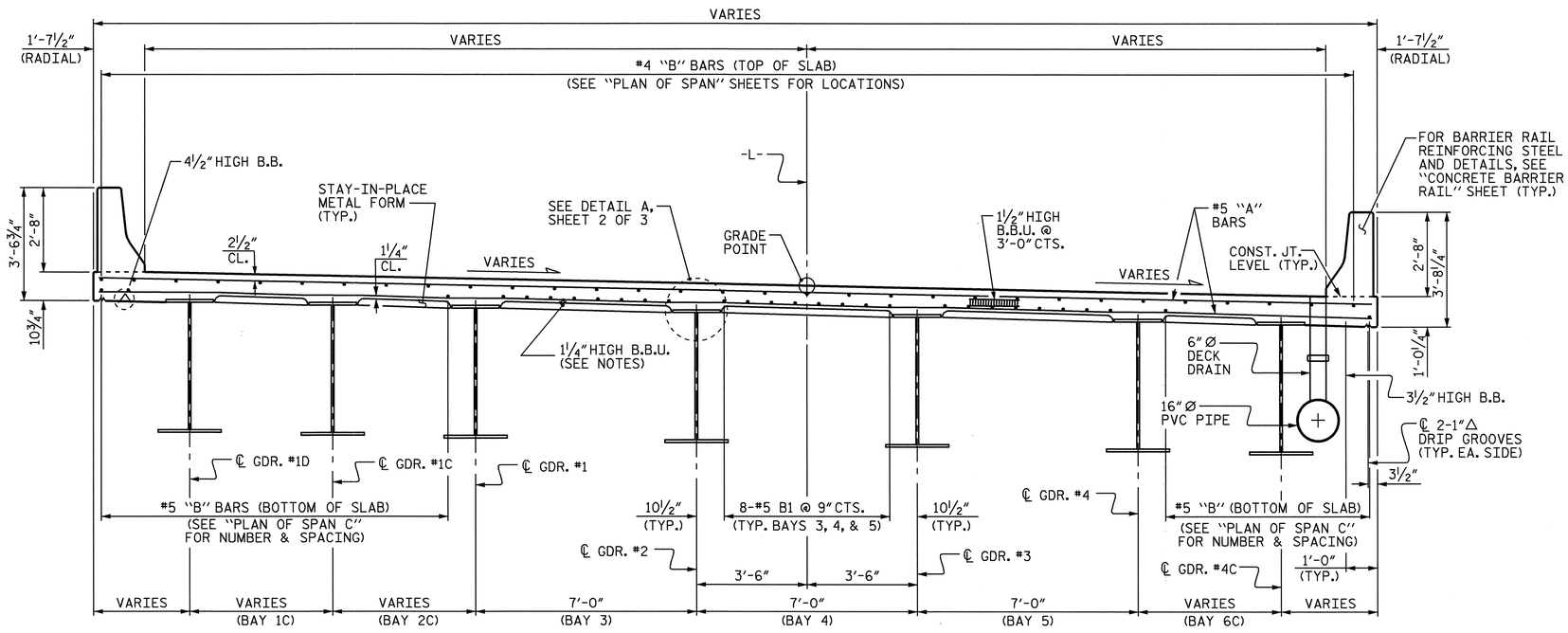


## SECTION B-B

(SEE "PLAN OF SPAN C" FOR LOCATION OF SECTION B-B)

## NOTES

PROVIDE 1 ¼" HIGH BEAM BOLSTERS UPPER AT 4'-0" CTS. ATOP THE METAL STAY-IN-PLACE FORMS TO SUPPORT THE BOTTOM MAT OF "A" BARS. WHEN USING REMOVABLE FORMS, PROVIDE CONTINUOUS HIGH CHAIRS FOR METAL DECK (C.H.C.M.) @ 4'-0" CTS. WITH A HEIGHT TO SUPPORT THE BOTTOM MAT OF "A" BARS A CLEAR DISTANCE OF 2½" ABOVE THE TOP OF THE REMOVABLE FORM.

PREVIOUSLY CAST CONCRETE IN A CONTINUOUS UNIT SHALL HAVE ATTAINED A MINIMUM COMPRESSIVE STRENGTH OF 3,000 PSI BEFORE ADDITIONAL CONCRETE IS CAST IN THE UNIT.

STRUCTURAL STEEL ERECTION IN A CONTINUOUS UNIT SHALL BE COMPLETE BEFORE FALSEWORK OR FORMS ARE PLACED ON THE UNIT.

THE CONTRACTOR MAY, WHEN NECESSARY, PROPOSE A SCHEME FOR AVOIDING INTERFERENCE BETWEEN METAL STAY-IN-PLACE FORM SUPPORTS OR FORMS AND BEAM/GIRDER STIFFENERS OR CONNECTOR PLATES. THE PROPOSAL SHALL BE INDICATED, AS APPROPRIATE, ON EITHER THE STEEL WORKING DRAWINGS OR THE METAL STAY-IN-PLACE FORM WORKING DRAWINGS.

THE CONTRACTOR SHALL ADJUST THE GIRDER BUILDUPS AS NECESSARY TO INCORPORATE A MAXIMUM PERMISSIBLE VARIATION IN POT BEARING DEPTH OF ½", SEE SPECIAL PROVISION FOR POT BEARINGS.

METAL STAY-IN-PLACE FORMS SHALL NOT BE WELDED TO BEAM OR GIRDER FLANGES IN THE ZONES REQUIRING CHARPY V-NOTCH TEST. SEE STRUCTURAL STEEL DETAIL SHEETS.

PROJECT NO. B-2848
YANCEY/MITCHELL COUNTY
STATION: 11+97.50 -L-

SHEET 1 OF 3

STATE OF NORTH CAROLINA
DEPARTMENT OF TRANSPORTATION
RALEIGH

SUPERSTRUCTURE

TYPICAL SECTION

NORTH CAROLINA PROFESSIONAL SEAL 22005 ENGINEER A. KEITH PASCHAL
11/29/06

| REVISIONS | | | | | | SHEET NO. |
|---|---|---|---|---|---|---|
| NO. | BY: | DATE: | NO. | BY: | DATE: | S-5 |
| 1 | | | 3 | | | TOTAL SHEETS |
| 2 | | | 4 | | | 91 |

DRAWN BY : K. McCAULEY DATE : 3/17/04
CHECKED BY : S. H. SOCKWELL DATE : 10/1/04

31-AUG-2006 12:50
R:\STRUCT01\ameadows\FINALP01\B2C3E001.DGN
ameadows

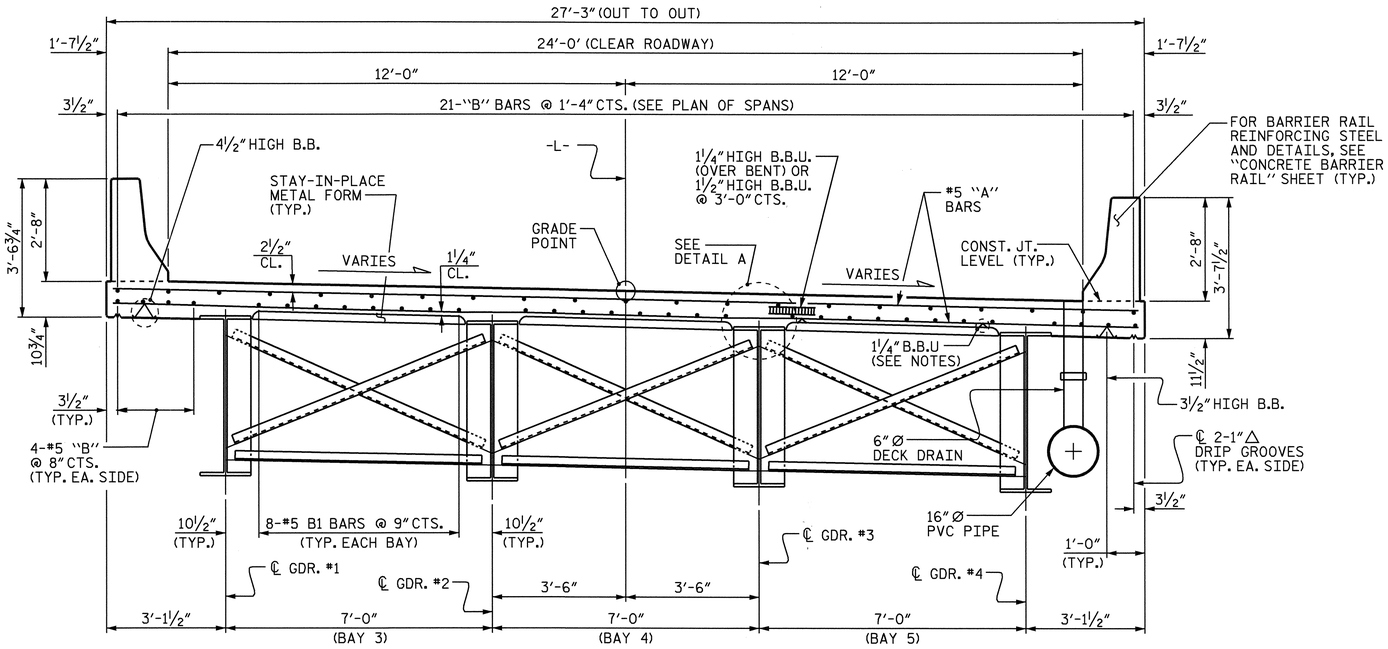


## TYPICAL SECTION

(SHOWING INTERMEDIATE DIAPHRAGMS)




## TYPICAL SECTION

(SHOWING DIAPHRAGMS @ BENTS 1 & 2)

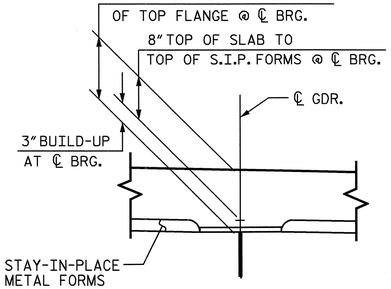


## DETAIL A

PROJECT NO. B-2848

YANCEY/MITCHELL COUNTY

STATION: 11+97.50 -L-

SHEET 2 OF 3

STATE OF NORTH CAROLINA
DEPARTMENT OF TRANSPORTATION
RALEIGH

SUPERSTRUCTURE

TYPICAL SECTION

NORTH CAROLINA PROFESSIONAL SEAL 22005 ENGINEER A. KEITH PASCHAL

11/29/06

| REVISIONS | | | | | | SHEET NO. |
|---|---|---|---|---|---|---|
| NO. | BY: | DATE: | NO. | BY: | DATE: | S-6 |
| 1 | | | 3 | | | TOTAL SHEETS |
| 2 | | | 4 | | | 91 |

DRAWN BY : K. McCAULEY DATE : 3/16/04
CHECKED BY : S. H. SOCKWELL DATE : 10/1/04

31-AUG-2006 12:49
R:\STRUCTØ1\ameadows\FINALPØ1\B2C3EØØ1.DGN
ameadows

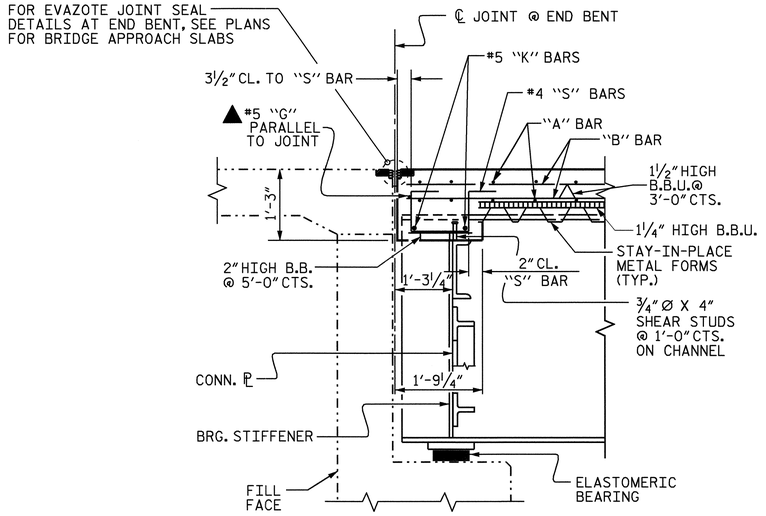


## SECTION THRU END BENT DIAPHRAGM

(TYP. BAYS 3, 4, & 5)

▲ #5 "G" BAR MAY BE SHIFTED SLIGHTLY, AS NECESSARY, TO CLEAR DIAPHRAGM AND REINFORCING STEEL.

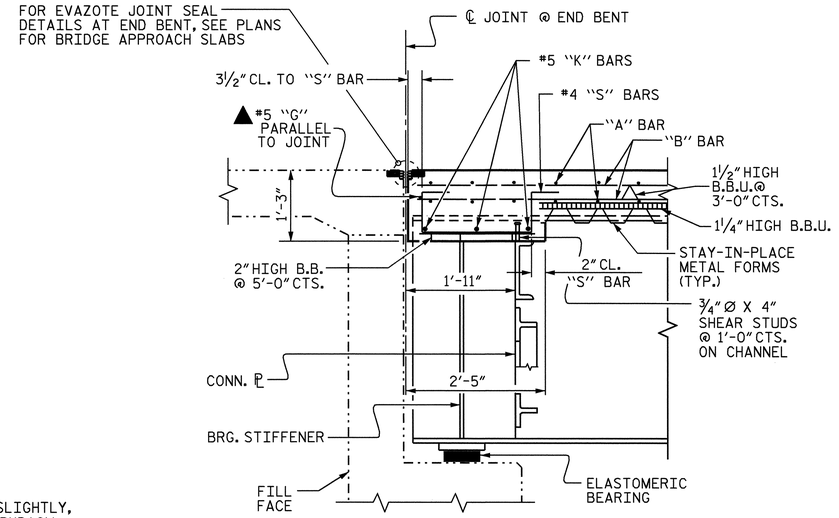


## SECTION THRU END BENT DIAPHRAGM

(TYP. BAYS 1, 2, 6, & 7)

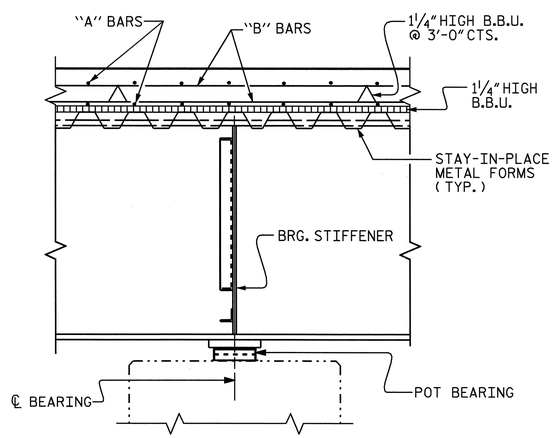


## SECTION THRU INTERIOR BENT DIAPHRAGM

PROJECT NO. B-2848

YANCEY/MITCHELL COUNTY

STATION: 11+97.50 -L-

SHEET 3 OF 3

STATE OF NORTH CAROLINA
DEPARTMENT OF TRANSPORTATION
RALEIGH

SUPERSTRUCTURE

TYPICAL SECTION

NORTH CAROLINA PROFESSIONAL SEAL 22005 ENGINEER A. KEITH PASCHAL

1/29/06

| REVISIONS | | | | | | SHEET NO. |
|---|---|---|---|---|---|---|
| NO. | BY: | DATE: | NO. | BY: | DATE: | S-7 |
| 1 | | | 3 | | | TOTAL SHEETS |
| 2 | | | 4 | | | 91 |

DRAWN BY : K. McCAULEY DATE : 3/18/04
CHECKED BY : S. H. SOCKWELL DATE : 10/1/04

31-AUG-2006 12:49
R:\STRUCTØ1\ameadows\FINALPØ1\B2C3E0Ø1.DGN
ameadows

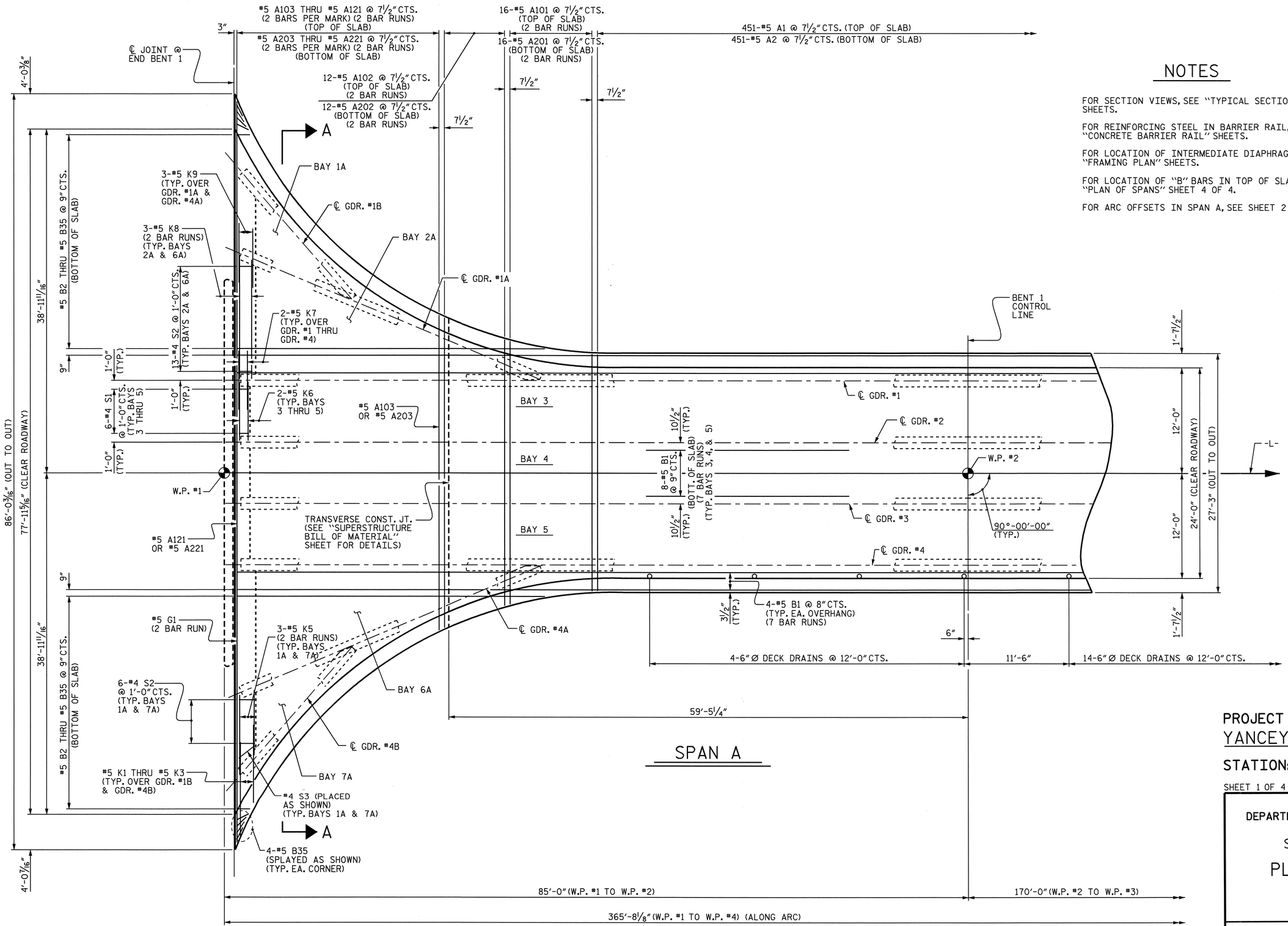


## NOTES

FOR SECTION VIEWS, SEE "TYPICAL SECTION" SHEETS.

FOR REINFORCING STEEL IN BARRIER RAIL, SEE "CONCRETE BARRIER RAIL" SHEETS.

FOR LOCATION OF INTERMEDIATE DIAPHRAGMS, SEE "FRAMING PLAN" SHEETS.

FOR LOCATION OF "B" BARS IN TOP OF SLAB, SEE "PLAN OF SPANS" SHEET 4 OF 4.

FOR ARC OFFSETS IN SPAN A, SEE SHEET 2 OF 4.

SPAN A

NORTH CAROLINA PROFESSIONAL SEAL 22005 ENGINEER KEITH PASCHAL

11/29/06

PROJECT NO. B-2848

YANCEY/MITCHELL COUNTY

STATION: 11+97.50 -L-

SHEET 1 OF 4

STATE OF NORTH CAROLINA
DEPARTMENT OF TRANSPORTATION
RALEIGH

SUPERSTRUCTURE

PLAN OF SPANS
SPAN A

| REVISIONS | | | | | | SHEET NO. |
|---|---|---|---|---|---|---|
| NO. | BY: | DATE: | NO. | BY: | DATE: | S-8 |
| 1 | | | 3 | | | TOTAL SHEETS |
| 2 | | | 4 | | | 91 |

DRAWN BY : K. McCAULEY DATE : 4/27/04
CHECKED BY : S. H. SOCKWELL DATE : 10/1/04

31-AUG-2006 12:48
R:\STRUCTØ1\ameadows\FINALPØ1\B2C381Ø1.DGN
ameadows

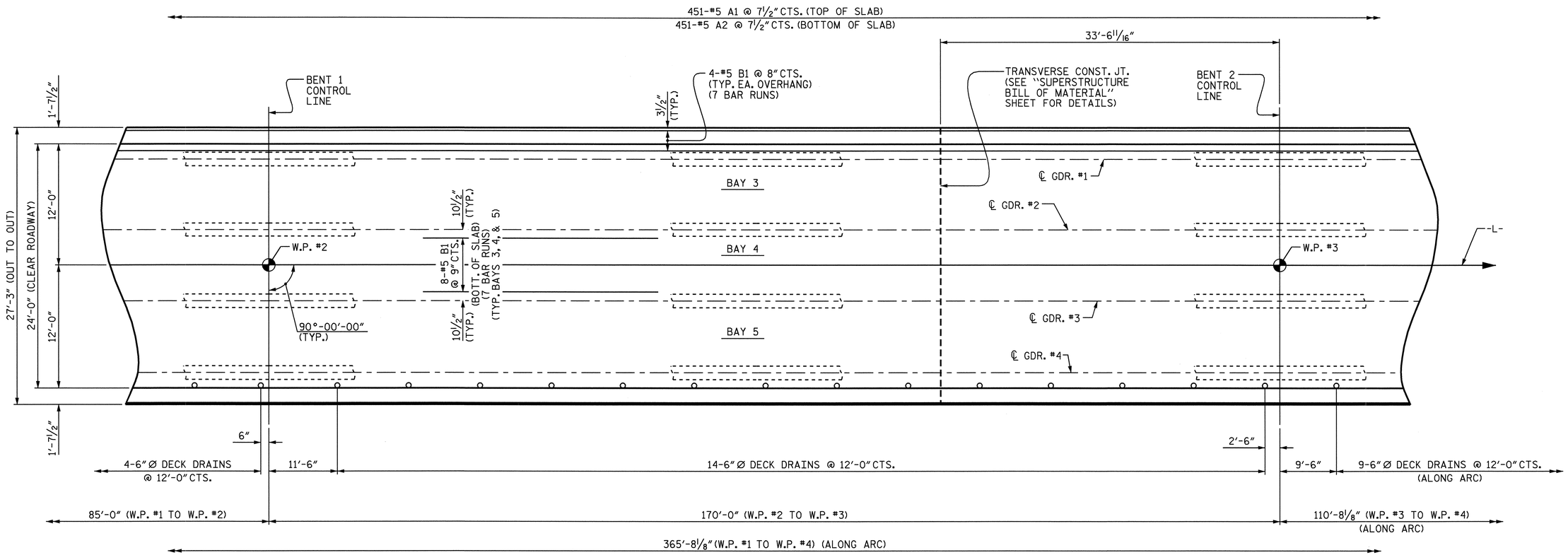


## SPAN B

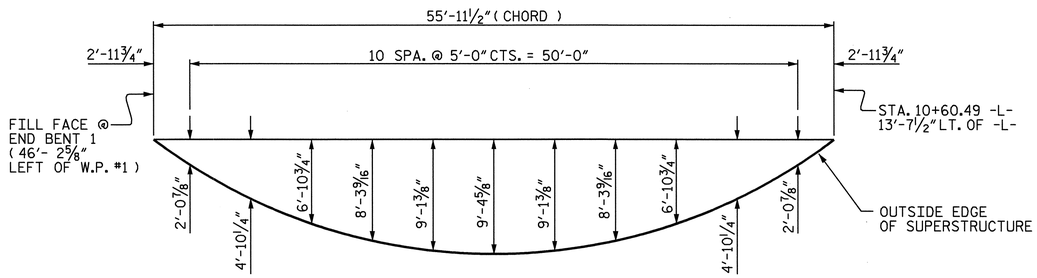


## ARC OFFSETS - SPAN A ( LEFT SIDE )

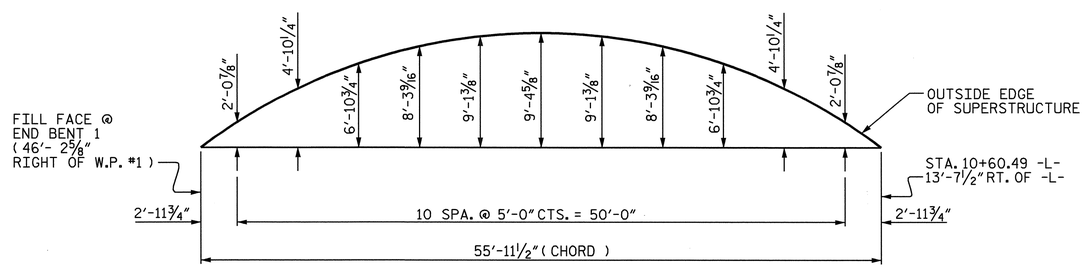


## ARC OFFSETS - SPAN A ( RIGHT SIDE )

## NOTES

FOR SECTION VIEWS, SEE "TYPICAL SECTION" SHEETS.

FOR REINFORCING STEEL IN BARRIER RAIL, SEE "CONCRETE BARRIER RAIL" SHEETS.

FOR LOCATION OF INTERMEDIATE DIAPHRAGMS, SEE "FRAMING PLAN" SHEETS.

FOR LOCATION OF "B" BARS IN TOP OF SLAB, SEE "PLAN OF SPANS" SHEET 4 OF 4.

PROJECT NO. B-2848

YANCEY/MITCHELL COUNTY

STATION: 11+97.50 -L-

SHEET 2 OF 4

STATE OF NORTH CAROLINA
DEPARTMENT OF TRANSPORTATION
RALEIGH

SUPERSTRUCTURE

PLAN OF SPANS
SPAN B

NORTH CAROLINA PROFESSIONAL SEAL 22005 ENGINEER K. KEITH PASCHAL
11/29/06

| REVISIONS | | | | | | SHEET NO. |
|---|---|---|---|---|---|---|
| NO. | BY: | DATE: | NO. | BY: | DATE: | S-9 |
| 1 | | | 3 | | | TOTAL SHEETS |
| 2 | | | 4 | | | 91 |

DRAWN BY : K. McCAULEY DATE : 4/27/04
CHECKED BY : S. H. SOCKWELL DATE : 10/1/04

31-AUG-2006 12:48
R:\STRUCT01\ameadows\FINALP01\B2C38101.DGN
ameadows

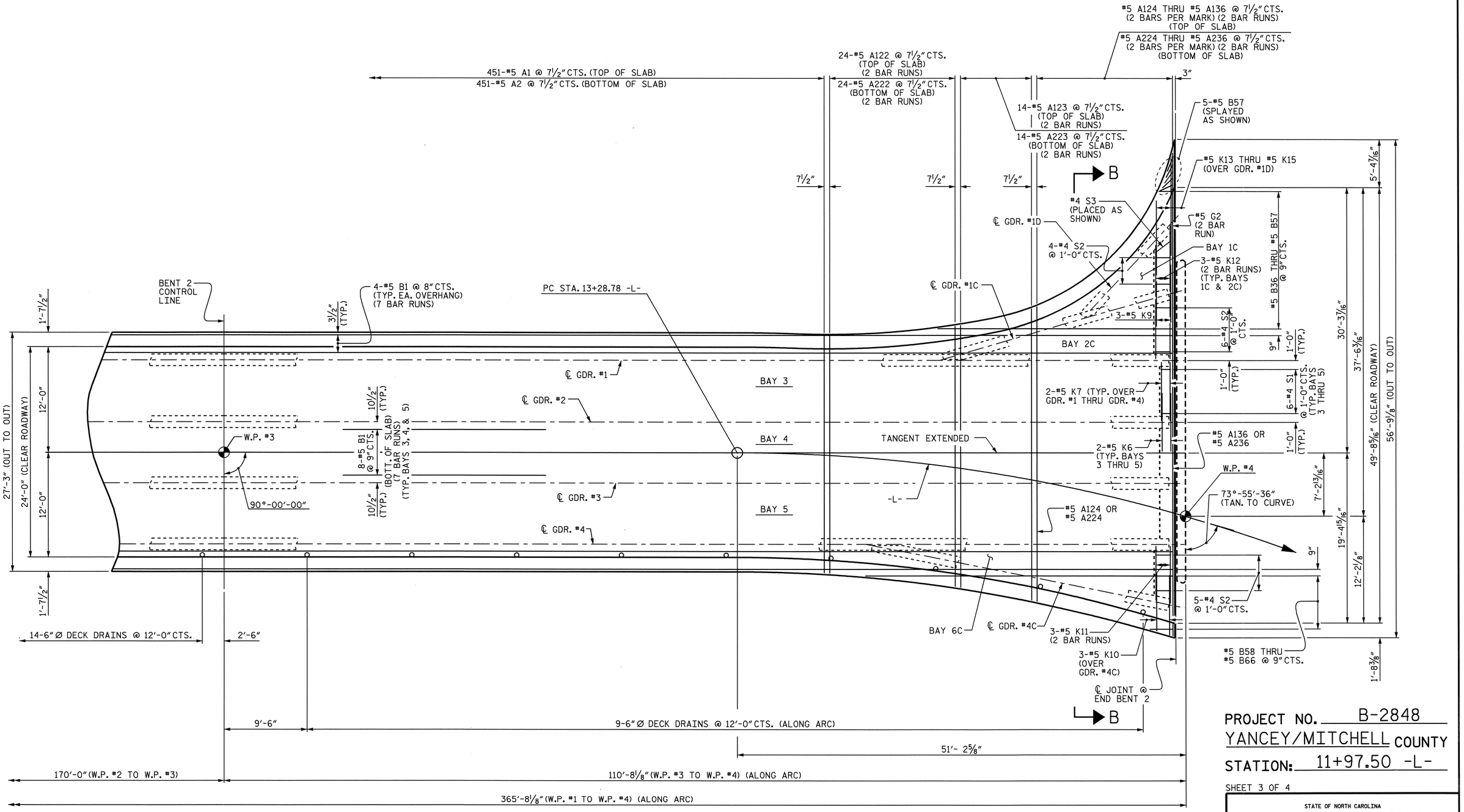


## SPAN C

## NOTES

FOR SECTION VIEWS, SEE "TYPICAL SECTION" SHEETS.

FOR REINFORCING STEEL IN BARRIER RAIL, SEE "CONCRETE BARRIER RAIL" SHEETS.

FOR LOCATION OF INTERMEDIATE DIAPHRAGMS, SEE "FRAMING PLAN" SHEETS.

FOR LOCATION OF "B" BARS IN TOP OF SLAB, SEE "PLAN OF SPANS" SHEET 4 OF 4.

FOR ARC OFFSETS IN SPAN C, SEE SHEET 4 OF 4.

NORTH CAROLINA PROFESSIONAL SEAL 22005 ENGINEER A. KEITH PASCHAL

11/29/06

PROJECT NO. B-2848

YANCEY/MITCHELL COUNTY

STATION: 11+97.50 -L-

SHEET 3 OF 4

STATE OF NORTH CAROLINA
DEPARTMENT OF TRANSPORTATION
RALEIGH

SUPERSTRUCTURE

PLAN OF SPANS
SPAN C

| REVISIONS | | | | | | SHEET NO. |
|---|---|---|---|---|---|---|
| NO. | BY: | DATE: | NO. | BY: | DATE: | S-10 |
| 1 | | | 3 | | | TOTAL SHEETS |
| 2 | | | 4 | | | 91 |

DRAWN BY : K. McCAULEY DATE : 4/27/04
CHECKED BY : S. H. SOCKWELL DATE : 10/1/04

06-OCT-2006 08:43
R:\STRUCT01\ameadows\FINALP01\B2C38101.DGN
ameadows

# NOTES

FOR SECTION VIEWS, SEE "TYPICAL SECTION" SHEETS.

FOR REINFORCING STEEL IN BARRIER RAIL, SEE "CONCRETE BARRIER RAIL" SHEETS.

FOR LOCATION OF INTERMEDIATE DIAPHRAGMS, SEE "FRAMING PLAN" SHEETS.

FOR LOCATION OF ADDITIONAL REINFORCING STEEL IN SUPERSTRUCTURE, SEE "PLAN OF SPANS", SHEETS 1-3 OF 4.

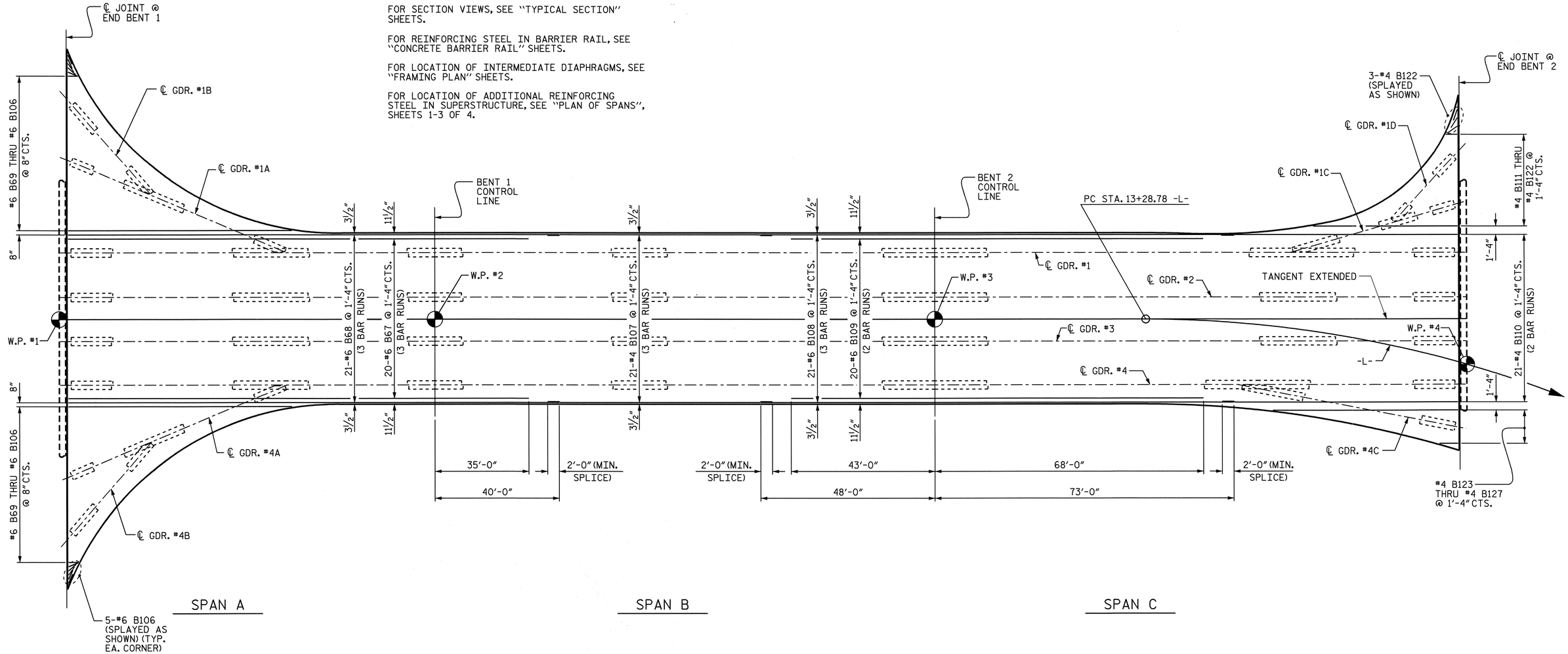


SPAN A

SPAN B

SPAN C

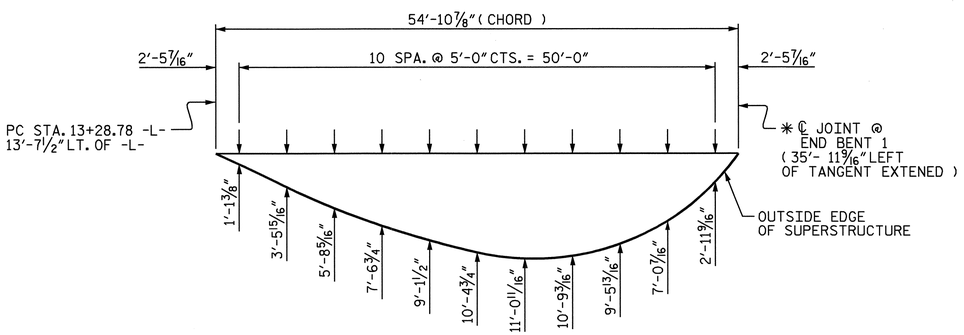


## ARC OFFSETS - SPAN C (LEFT SIDE)

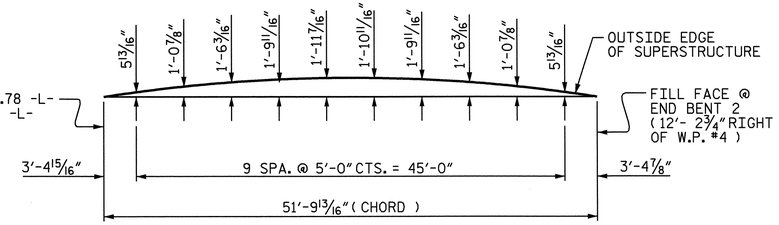


## ARC OFFSETS - SPAN C (RIGHT SIDE)

* THE ARC OFFSETS ARE TAKEN FROM ℄ JOINT DUE TO ROADWAY ALIGNMENT ON THIS SIDE OF BRIDGE.

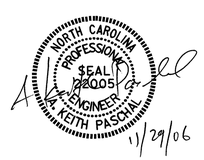


PROJECT NO. B-2848

YANCEY/MITCHELL COUNTY

STATION: 11+97.50 -L-

SHEET 4 OF 4

STATE OF NORTH CAROLINA
DEPARTMENT OF TRANSPORTATION
RALEIGH

SUPERSTRUCTURE

PLAN OF SPANS

PLACEMENT OF "B" BARS IN TOP OF SLAB

| REVISIONS | | | | | | SHEET NO. |
|---|---|---|---|---|---|---|
| NO. | BY: | DATE: | NO. | BY: | DATE: | S-11 |
| 1 | | | 3 | | | TOTAL SHEETS |
| 2 | | | 4 | | | 91 |

DRAWN BY : K. McCAULEY DATE : 4/29/04
CHECKED BY : S. H. SOCKWELL DATE : 10/1/04

06-OCT-2006 08:43
R:\STRUCTØ1\ameadows\FINALPØ1\B2C381ØI.DGN
ameadows

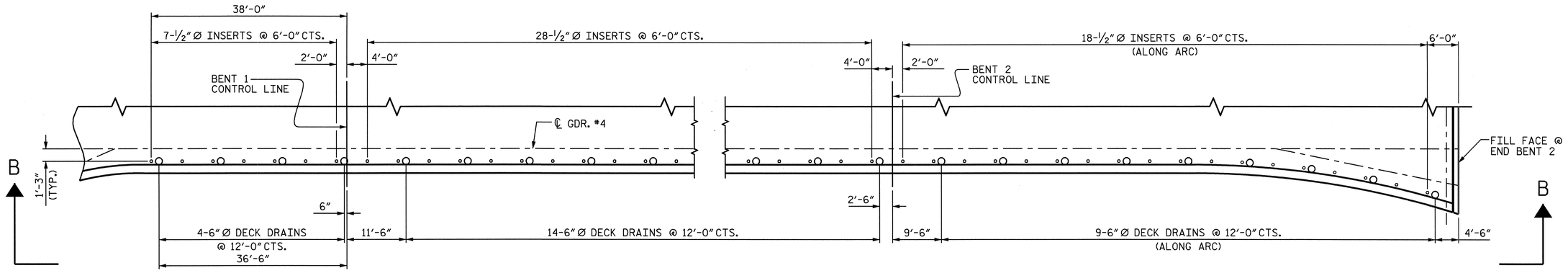


## PARTIAL DECK PLAN

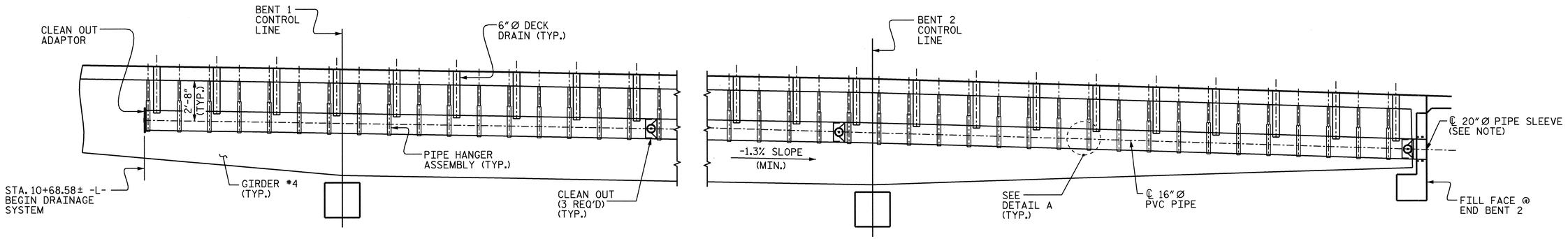


## VIEW B-B

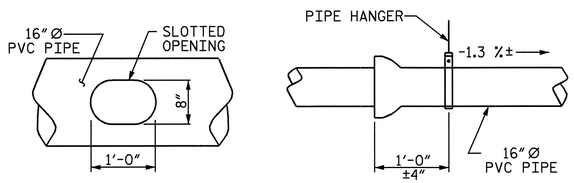


SLOT DETAIL




DETAIL A

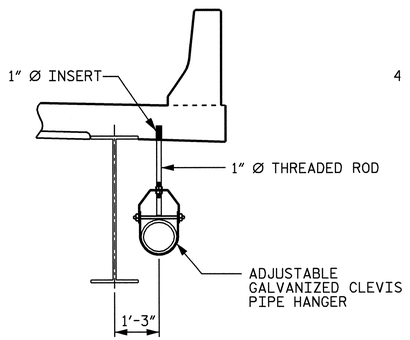


SECTION THRU DRAINAGE SYSTEM AT TYPICAL HANGER

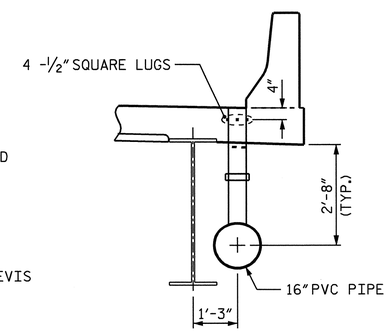


SECTION THRU DRAINAGE SYSTEM AT 6" DECK DRAINS

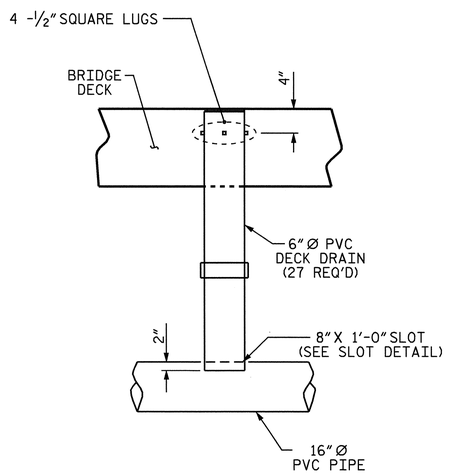


ELEVATION VIEW OF DECK DRAIN & DRAIN LINE INTERSECTION

## NOTES

THE CONTRACTOR SHALL SUBMIT FOR ACCEPTANCE, PRIOR TO PURCHASE, A PLAN FOR THE CLOSED DRAINAGE SYSTEM.

THE CONTRACTOR SHALL BE RESPONSIBLE FOR DETERMINING THE HORIZONTAL AND VERTICAL ALIGNMENT OF THE PVC DRAINAGE SYSTEM USING NECESSARY FITTINGS AND TEES TO PROVIDE A CONTINUOUS DRAINAGE SYSTEM.

FOR STRUCTURE DRAINAGE SYSTEM, SEE SPECIAL PROVISIONS.

STEEL CLEVIS, BOLTS, NUTS AND WASHERS SHALL BE HIGH STRENGTH AND GALVANIZED IN ACCORDANCE WITH THE STANDARD SPECIFICATIONS.

CONCRETE INSERTS SHALL BE OF AN APPROVED GALVANIZED TYPE HAVING A MINIMUM WORKING LOAD TENSION CAPACITY OF 4.2 KIPS.

PIPE AND FITTINGS SHALL BE PVC, SDR 35, ASTM D 3034.

DRAIN SYSTEM WILL BE PAID FOR UNDER THE PAY ITEM "STRUCTURE DRAINAGE SYSTEM - LUMP SUM".

CLEAN OUTS MAY BE SHIFTED SLIGHTLY TO AVOID INTERFERENCE WITH HANGERS AND DRAINS.

THE PVC DRAINAGE SYSTEM SHALL BE PAINTED WITH TWO COATS OF BROWN PRIMER MEETING THE REQUIREMENTS OF ARTICLE 1080-12 OF THE STANDARD SPECIFICATIONS. EACH COAT SHALL BE 2 DRY MIL THICK. THE PVC DRAINAGE SYSTEM SHALL BE ROUGHENED PRIOR TO PAINTING. NO SEPARATE PAYMENT SHALL BE MADE FOR PAINTING THE PVC DRAINAGE SYSTEM AS THIS IS INCLUDED IN THE LUMP SUM BID PRICE FOR STRUCTURE DRAINAGE SYSTEM.

TOP OF FLOOR DRAIN TO BE SET ⅜" BELOW SURFACE OF SLAB.

4 -½" SQUARE LUGS TO BE GLUED TO THE PVC PLASTIC PIPE AT EQUAL SPACES AROUND THE PIPE DRAIN APPROXIMATELY 4" FROM THE TOP OF THE PIPE.

COUPLING IN DRAIN PIPE WILL BE PERMITTED AS APPROVED BY THE ENGINEER.

CENTER UTILITY IN PIPE SLEEVE AND FILL ANNULAR SPACE AROUND UTILITY PIPE WITH JOINT FILLER IN ACCORDANCE WITH STANDARD SPECIFICATION ARTICLE 1028-1.

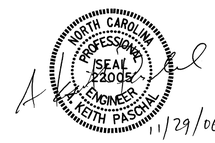


11/29/06

PROJECT NO. B-2848

YANCEY/MITCHELL COUNTY

STATION: 11+97.50 -L-

STATE OF NORTH CAROLINA
DEPARTMENT OF TRANSPORTATION
RALEIGH

SUPERSTRUCTURE

STRUCTURE DRAINAGE SYSTEM

| REVISIONS | | | | | | SHEET NO. |
|---|---|---|---|---|---|---|
| NO. | BY: | DATE: | NO. | BY: | DATE: | S-12 |
| 1 | | | 3 | | | TOTAL SHEETS |
| 2 | | | 4 | | | 91 |

DRAWN BY : K. McCAULEY DATE : 5/25/04
CHECKED BY : S. H. SOCKWELL DATE : 10/15/04

29-NOV-2006 11:39
R:\Structures\ameadows\FINAL PLANS\B2848_sd_CDS_01.dgn
kpaschal

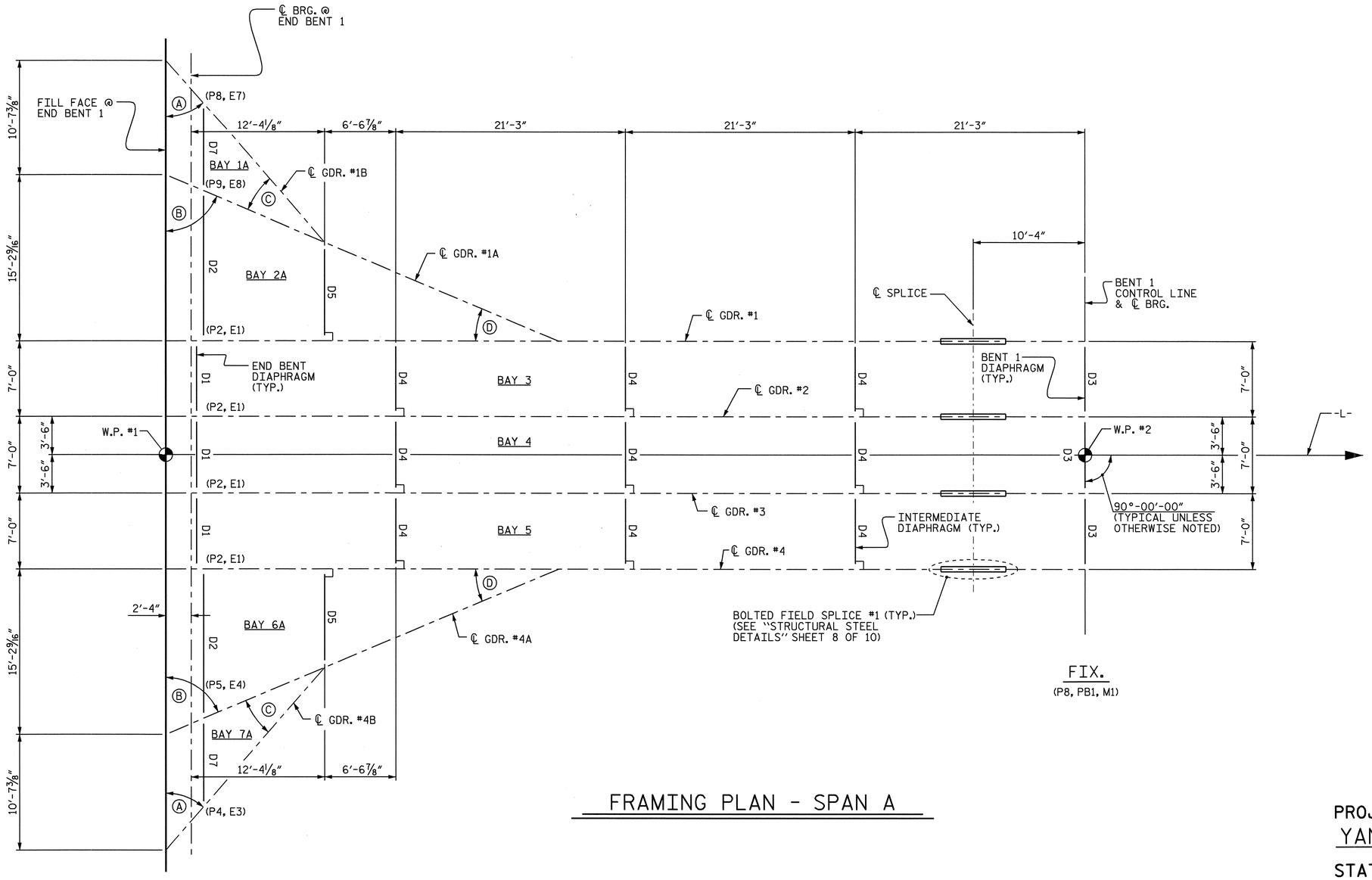


# FRAMING PLAN - SPAN A

| ANGLES | |
|---|---|
| Ⓐ | 41°-12′-08″ |
| Ⓑ | 67°-16′-07″ |
| Ⓒ | 26′-04′-04″ |
| Ⓓ | 22°-43′-53″ |

PROJECT NO. B-2848
YANCEY/MITCHELL COUNTY
STATION: 11+97.50 -L-

SHEET 1 OF 3

STATE OF NORTH CAROLINA
DEPARTMENT OF TRANSPORTATION
RALEIGH

SUPERSTRUCTURE

FRAMING PLAN
SPAN A

NORTH CAROLINA PROFESSIONAL SEAL 22005 ENGINEER A. KEITH PASCHAL
11/29/06

| REVISIONS | | | | | | SHEET NO. |
|---|---|---|---|---|---|---|
| NO. | BY: | DATE: | NO. | BY: | DATE: | S-13 |
| 1 | | | 3 | | | TOTAL SHEETS |
| 2 | | | 4 | | | 91 |

DRAWN BY : K. McCAULEY DATE : 2/12/04
CHECKED BY : S. H. SOCKWELL DATE : 10/1/04

06-OCT-2006 08:44
R:\STRUCTØ1\ameadows\FINALPØ1\B2BDD2Ø1.DGN
ameadows

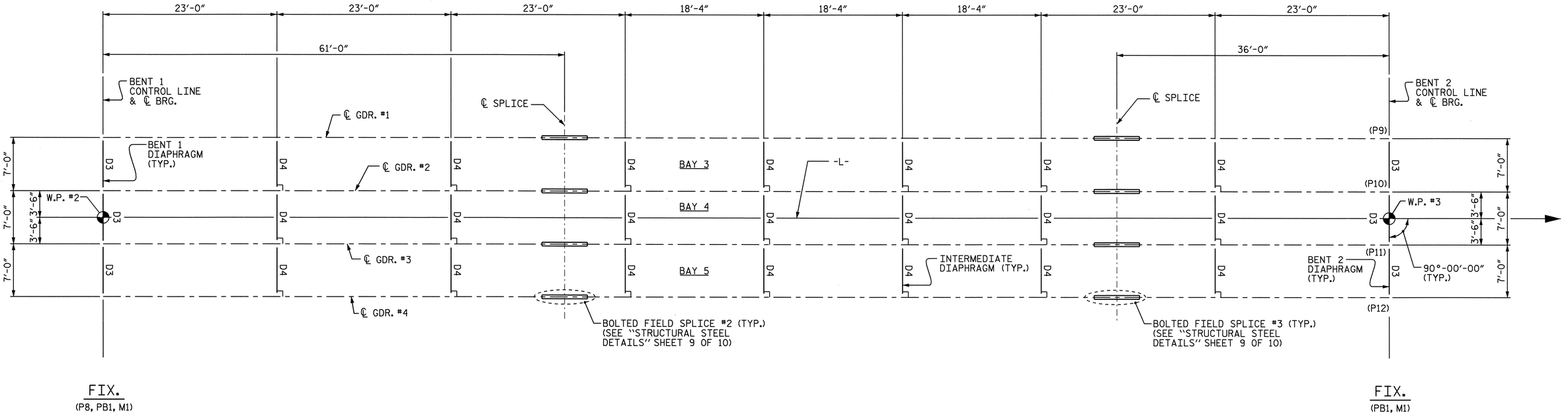


# FRAMING PLAN - SPAN B

PROJECT NO. B-2848

YANCEY/MITCHELL COUNTY

STATION: 11+97.50 -L-

SHEET 2 OF 3

STATE OF NORTH CAROLINA
DEPARTMENT OF TRANSPORTATION
RALEIGH

SUPERSTRUCTURE

FRAMING PLAN
SPAN B

NORTH CAROLINA PROFESSIONAL SEAL 22005 ENGINEER K. KEITH PASCHAL

11/29/06

| REVISIONS | | | | | | SHEET NO. |
|---|---|---|---|---|---|---|
| NO. | BY: | DATE: | NO. | BY: | DATE: | S-14 |
| 1 | | | 3 | | | TOTAL SHEETS |
| 2 | | | 4 | | | 91 |

DRAWN BY : K. McCAULEY DATE : 2/12/04
CHECKED BY : S. H. SOCKWELL DATE : 10/1/04

31-AUG-2006 12:45
R:\STRUCT@1\ameadows\FINALP@1\B2BDD2@1.DGN
ameadows

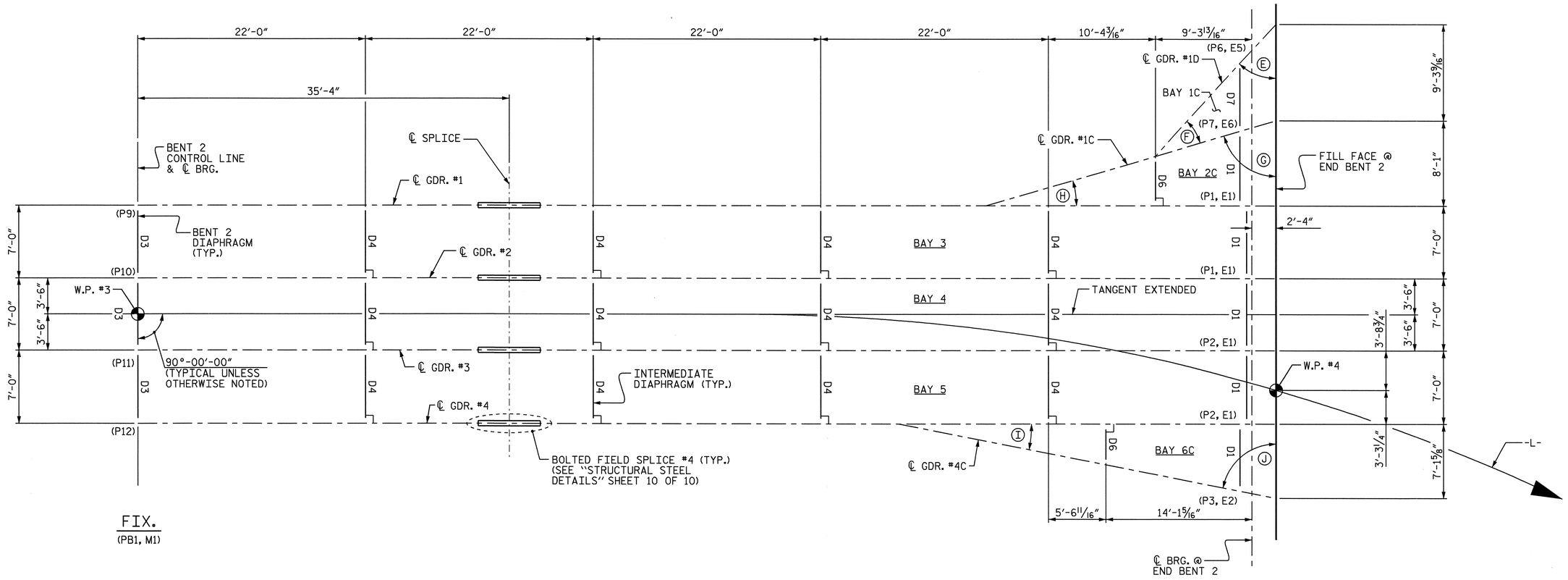


FIX.
(PB1, M1)

EXP.

## FRAMING PLAN - SPAN C

| ANGLES | |
|---|---|
| (E) | 42°-38'-37" |
| (F) | 31°-16'-42" |
| (G) | 73°-55'-18" |
| (H) | 16°-04'-42" |
| (I) | 11°-04'-26" |
| (J) | 78°-55'-33" |

PROJECT NO. B-2848
YANCEY/MITCHELL COUNTY
STATION: 11+97.50 -L-

SHEET 3 OF 3

STATE OF NORTH CAROLINA
DEPARTMENT OF TRANSPORTATION
RALEIGH

SUPERSTRUCTURE

FRAMING PLAN
SPAN C

NORTH CAROLINA PROFESSIONAL SEAL 22005 ENGINEER W. KEITH PASCHAL
11/29/06

| REVISIONS | | | | | | SHEET NO. |
|---|---|---|---|---|---|---|
| NO. | BY: | DATE: | NO. | BY: | DATE: | S-15 |
| 1 | | | 3 | | | TOTAL SHEETS |
| 2 | | | 4 | | | 91 |

DRAWN BY : K. McCAULEY DATE : 2/12/04
CHECKED BY : S. H. SOCKWELL DATE : 10/1/04

31-AUG-2006 12:45
R:\STRUCTØ1\ameadows\FINALPØ1\B2BDD2Ø1.DGN
ameadows

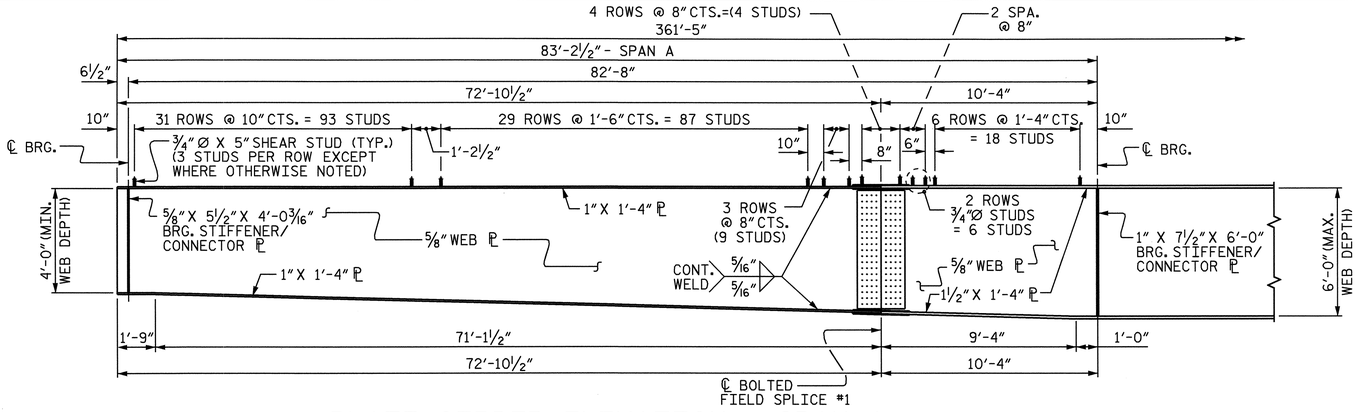


## PLATE GIRDER ELEVATION - SPAN A

(TYP. GIRDERS #1 THRU #4) (213 STUDS REQUIRED PER GIRDER)
(SEE "BOLTED FIELD SPLICE" DETAILS FOR ADDITIONAL STUDS)

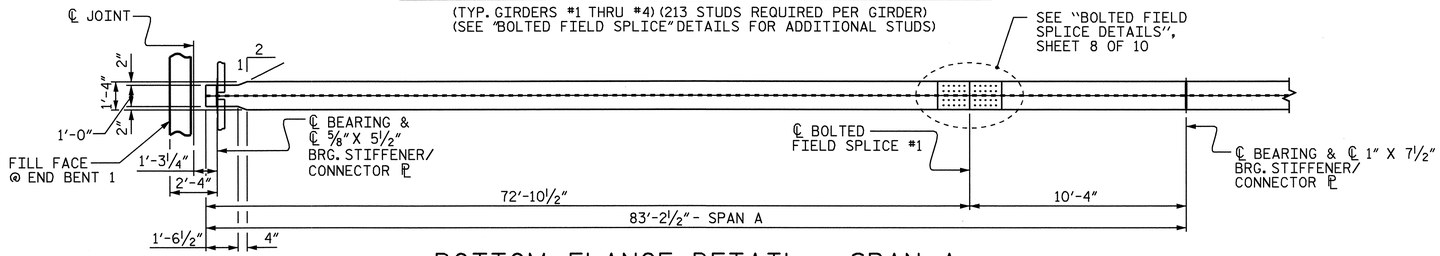


## BOTTOM FLANGE DETAIL - SPAN A

(TYPICAL GIRDERS #1 THRU #4. INTERIOR GIRDER SHOWN.
FOR PLACEMENT OF BEARING STIFFENERS & CONNECTOR ℙ'S
ON EXTERIOR GIRDERS, SEE DETAIL F.)

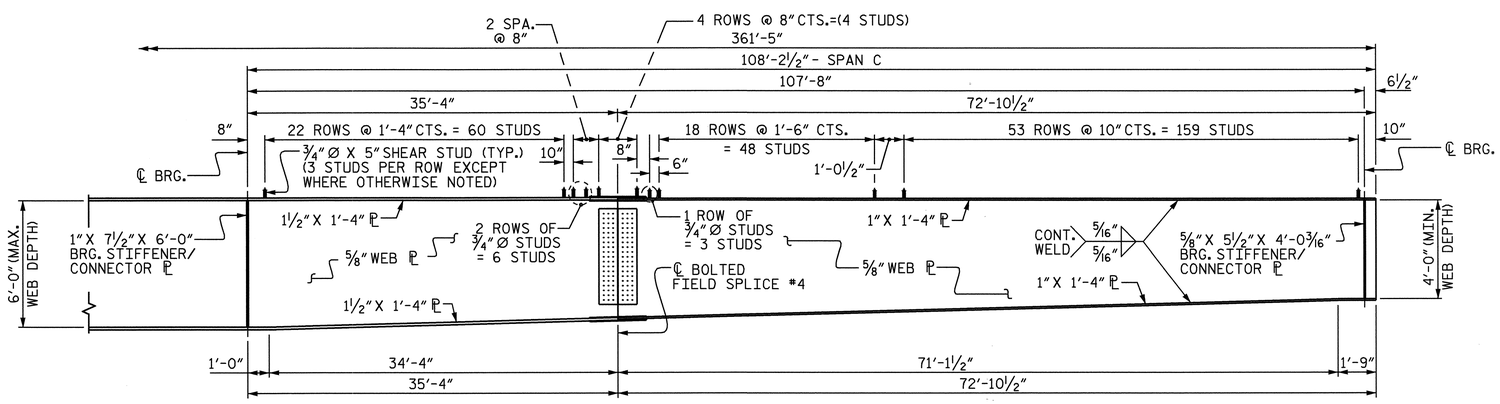


## PLATE GIRDER ELEVATION - SPAN C

(TYP. GIRDERS #1 THRU #4) (288 STUDS REQUIRED PER GIRDER)
(SEE "BOLTED FIELD SPLICE" DETAILS FOR ADDITIONAL STUDS)

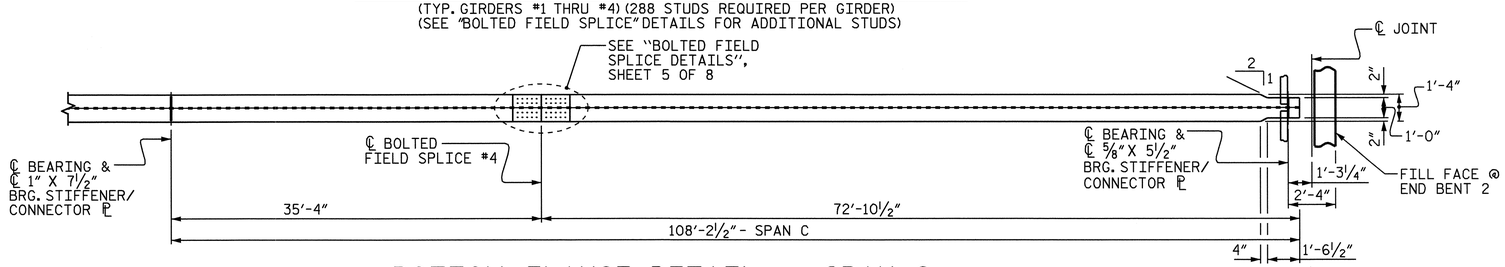


## BOTTOM FLANGE DETAIL - SPAN C

(TYPICAL GIRDERS #1 THRU #4. INTERIOR GIRDER SHOWN.
FOR PLACEMENT OF BEARING STIFFENERS & CONNECTOR ℙ'S
ON EXTERIOR GIRDERS, SEE DETAIL F.)

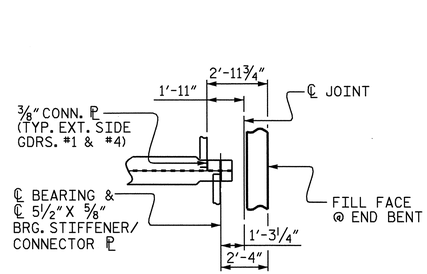


DETAIL F

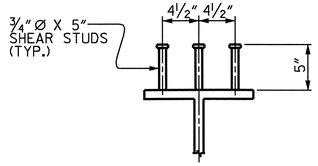


SHEAR STUD DETAIL FOR TOP FLANGE PLATE

## NOTES

ALL STRUCTURAL STEEL SHALL BE AASHTO M270 GRADE 50W AND PAINTED IN ACCORDANCE WITH SYSTEM 4 OF ARTICLE 442-7 OF THE STANDARD SPECIFICATIONS UNLESS OTHERWISE NOTED ON THE PLANS.

ALL DIMENSIONS SHOWN ARE HORIZONTAL OR VERTICAL, UNLESS OTHERWISE NOTED.

ALL FIELD CONNECTIONS TO BE ⅞"Ø HIGH STRENGTH BOLTS UNLESS OTHERWISE NOTED.

BEARING STIFFENERS ARE TO BE PLACED NORMAL TO THE WEB OF THE GIRDER AND SHALL BE PLUMB.

SHOP SPLICES ARE PERMITTED TO LIMIT THE MAXIMUM REQUIRED FLANGE PIECE LENGTHS TO 60 FEET AND WEB PIECE LENGTHS TO 45 FEET. PERMITTED FLANGE AND WEB SHOP SPLICES SHALL NOT BE LOCATED WITHIN 15 FEET OF MAXIMUM DEAD LOAD DEFLECTION (NOR WITHIN 15 FEET OF INTERMEDIATE BEARINGS OF CONTINUOUS UNITS). KEEP 2 FEET MINIMUM BETWEEN WEB AND FLANGE SHOP SPLICES. KEEP 6" MINIMUM BETWEEN CONNECTOR PLATE OR TRANSVERSE STIFFENER WELDS AND WEB OR FLANGE SHOP SPLICES.

STUDS ON GIRDERS MAY BE SHIFTED UP TO 1" IF NECESSARY TO CLEAR FLANGE SPLICE WELD.

TENSION ON THE AASHTO M164 BOLTS SHALL BE CALIBRATED USING DIRECT TENSION INDICATOR WASHERS IN ACCORDANCE WITH ARTICLE 440-10 OF THE STANDARD SPECIFICATIONS.

END OF BEAMS AND GIRDERS SHALL BE PLUMB.

BEARING STIFFENER MAY REQUIRE COPING IF WIDER THAN BOTTOM FLANGE TO AVOID INTERFERENCE WITH THE ANCHOR BOLT.

PROJECT NO. B-2848
YANCEY/MITCHELL COUNTY
STATION: 11+97.50 -L-

SHEET 1 OF 10

STATE OF NORTH CAROLINA
DEPARTMENT OF TRANSPORTATION
RALEIGH

SUPERSTRUCTURE

STRUCTURAL STEEL DETAILS

NORTH CAROLINA PROFESSIONAL SEAL 22005 ENGINEER M. KEITH PASCHAL
11/29/06

| REVISIONS | | | | | | SHEET NO. |
|---|---|---|---|---|---|---|
| NO. | BY: | DATE: | NO. | BY: | DATE: | S-16 |
| 1 | | | 3 | | | TOTAL SHEETS |
| 2 | | | 4 | | | 91 |

DRAWN BY : K. McCAULEY DATE : 3/01/04
CHECKED BY : S. H. SOCKWELL DATE : 10/15/04

06-OCT-2006 14:13
R:\STRUCTØ1\ameadows\FINALPØ1\B2C3E1Ø1.DGN
ameadows

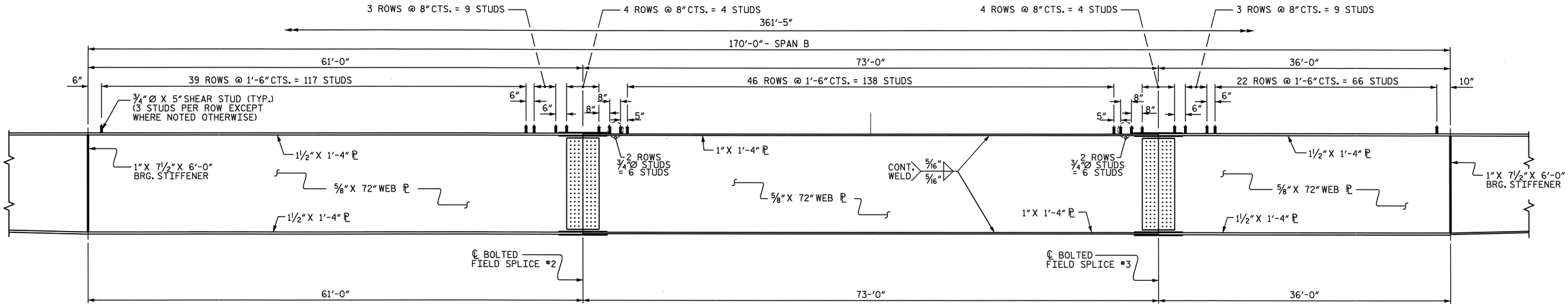


## PLATE GIRDER ELEVATION - SPAN B

(TYP. GIRDERS #1 THRU #4) (351 SHEAR STUDS REQUIRED PER GIRDER
SEE "BOLTED FIELD SPLICE" DETAILS FOR ADDITIONAL STUDS)

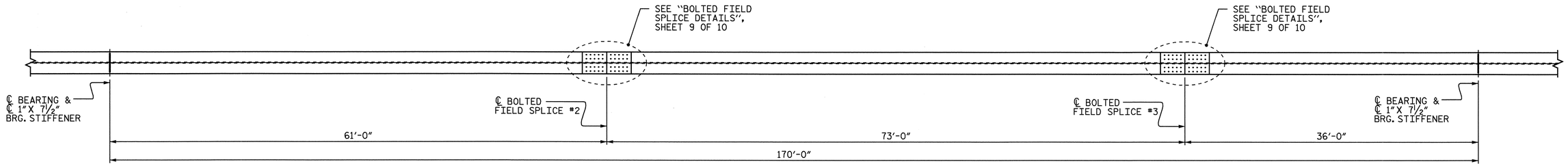


## BOTTOM FLANGE DETAIL - SPAN B

(TYP. GIRDERS #1 THRU #4)

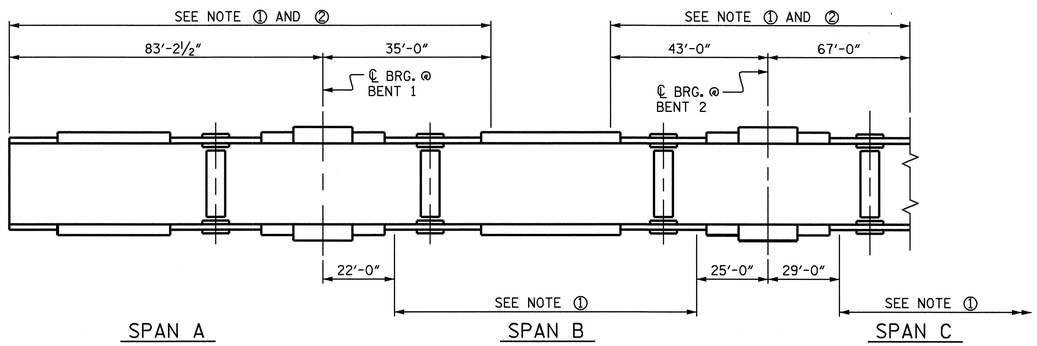


GIRDER MAKE UP

## CHARPY V-NOTCH TESTS FOR CONTINUOUS PLATE GIRDERS

NOTE ①: CHARPY V-NOTCH TESTS ARE REQUIRED FOR ALL TOP OR BOTTOM FLANGE PLATES WHICH FALL WITHIN THESE LIMITS, ALL WEB PLATES, AND SPLICE PLATES. IF A PERMITTED SHOP FLANGE SPLICE IS NOT USED, CHARPY V-NOTCH TESTS WILL BE REQUIRED FOR THE ENTIRE FLANGE PLATE. FOR CHARPY V-NOTCH TESTS, SEE ARTICLE 1072-9 OF THE STANDARD SPECIFICATIONS.

NOTE ②: NO WELDING OF FORMS OR FALSEWORK TO THE TOP FLANGE WILL BE PERMITTED IN THIS REGION.

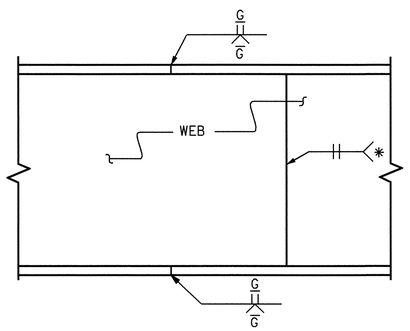


## PERMISSIBLE SHOP WEB & FLANGE SPLICE

*GRIND SMOOTH & FLUSH ON OUTSIDE OF EXTERIOR GIRDERS

NORTH CAROLINA PROFESSIONAL SEAL 22005 ENGINEER KEITH PASCHAL
11/29/06

PROJECT NO. B-2848
YANCEY/MITCHELL COUNTY
STATION: 11+97.50 -L-

SHEET 2 OF 10

STATE OF NORTH CAROLINA
DEPARTMENT OF TRANSPORTATION
RALEIGH

SUPERSTRUCTURE

STRUCTURAL STEEL DETAILS

| REVISIONS | | | | | | SHEET NO. |
|---|---|---|---|---|---|---|
| NO. | BY: | DATE: | NO. | BY: | DATE: | S-17 |
| 1 | | | 3 | | | TOTAL SHEETS |
| 2 | | | 4 | | | 91 |

DRAWN BY : K. McCAULEY DATE : 3/01/04
CHECKED BY : S. H. SOCKWELL DATE : 10/15/04

31-AUG-2006 12:44
R:\STRUCT01\ameadows\FINALP01\B2C3E101.DGN
ameadows

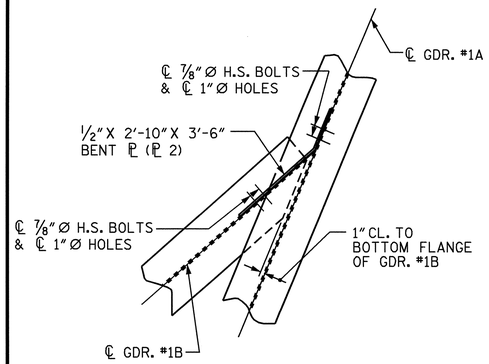


## DETAIL A

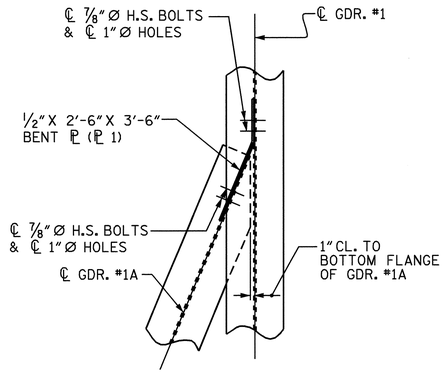


## DETAIL B

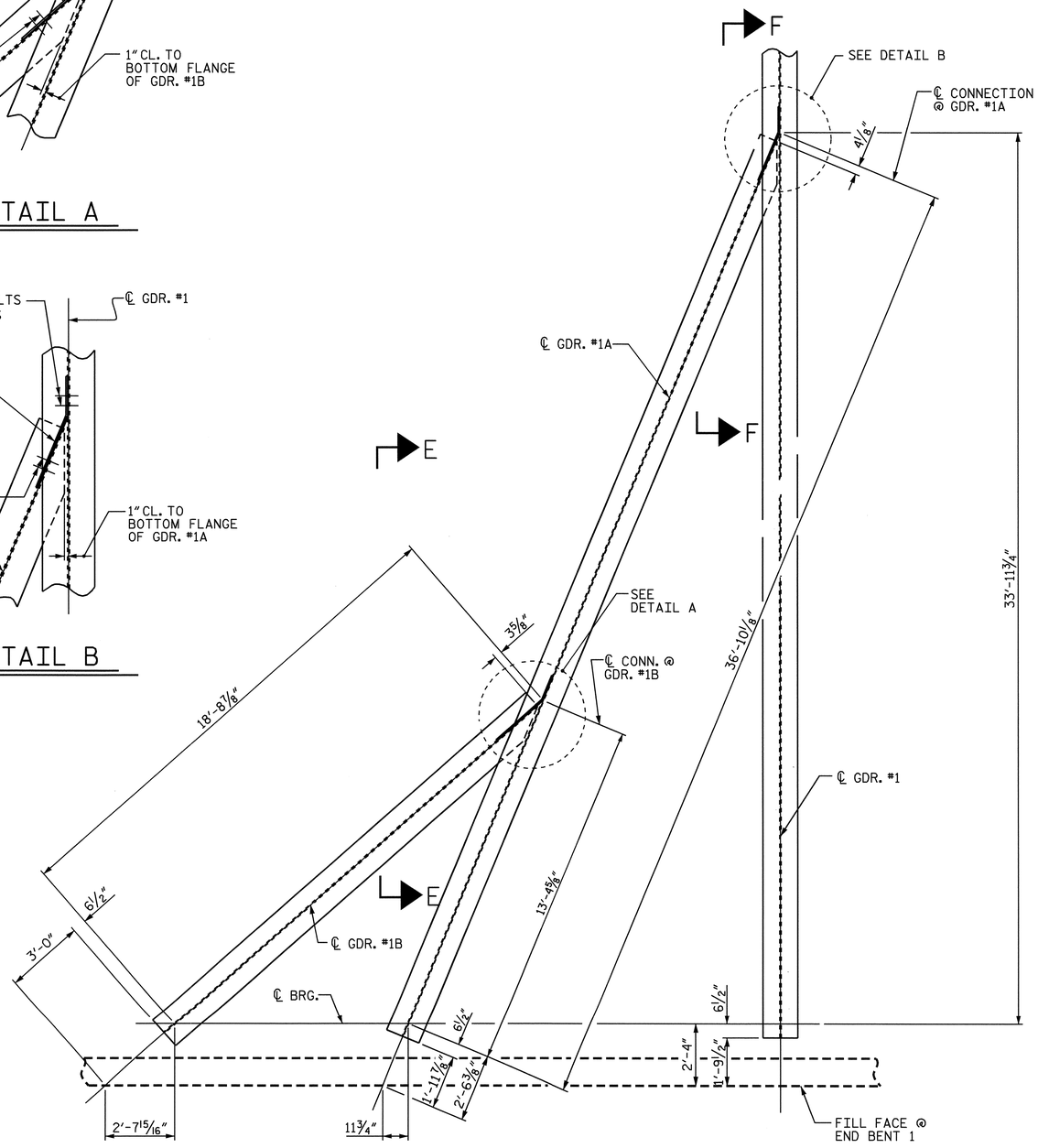


## PLAN VIEW OF GIRDERS #1A & #1B

(END BENT DIAPHRAGMS & BEARING STIFFENERS NOT SHOWN FOR CLARITY)
(GIRDERS #4A & #4B SIMILAR)

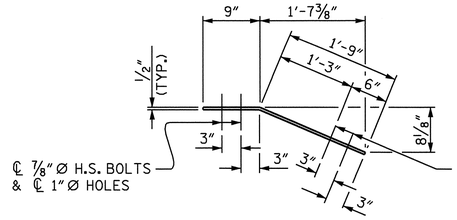


## PLAN VIEW ℙ 1

(2 REQUIRED)

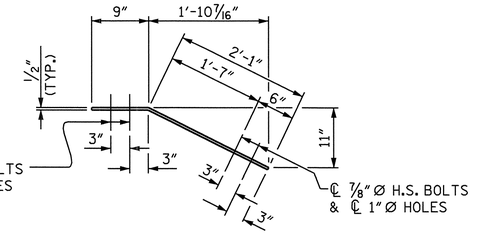


## PLAN VIEW ℙ 2

(2 REQUIRED)

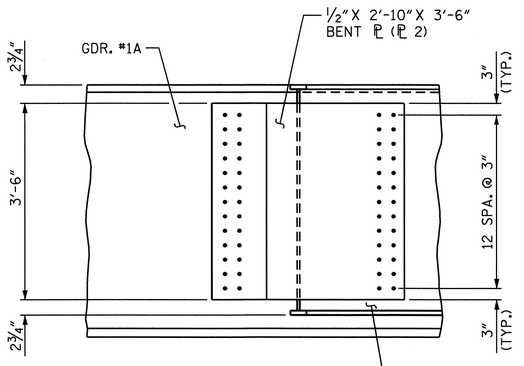


## VIEW E-E

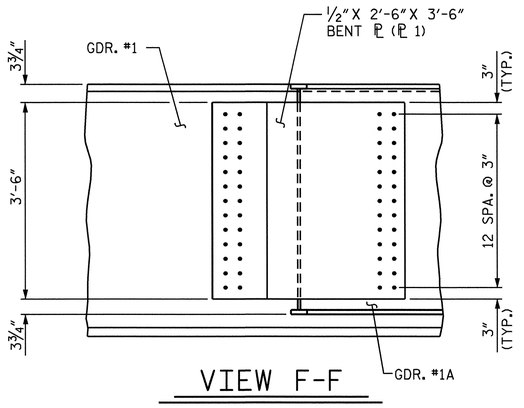


## VIEW F-F

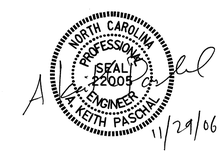


11/29/06

PROJECT NO. B-2848
YANCEY/MITCHELL COUNTY
STATION: 11+97.50 -L-

SHEET 3 OF 10

STATE OF NORTH CAROLINA
DEPARTMENT OF TRANSPORTATION
RALEIGH

SUPERSTRUCTURE

# STRUCTURAL STEEL DETAILS

| REVISIONS | | | | | | SHEET NO. |
|---|---|---|---|---|---|---|
| NO. | BY: | DATE: | NO. | BY: | DATE: | S-18 |
| 1 | | | 3 | | | TOTAL SHEETS |
| 2 | | | 4 | | | 91 |

DRAWN BY : K. McCAULEY DATE : 3/03/04
CHECKED BY : S. H. SOCKWELL DATE : 10/15/04

31-AUG-2006 12:43
R:\STRUCT01\ameadows\FINALP01\B2C3E101.DGN
ameadows

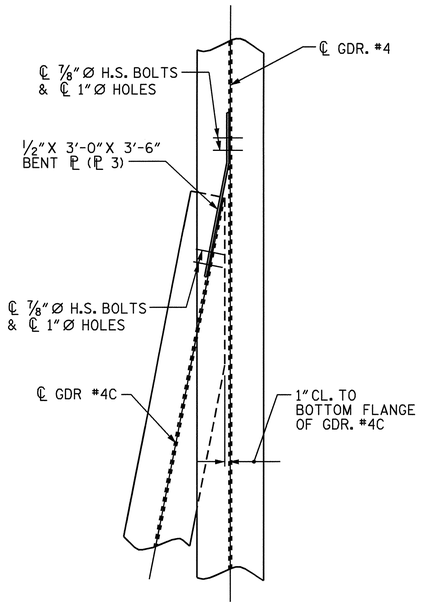


## DETAIL C

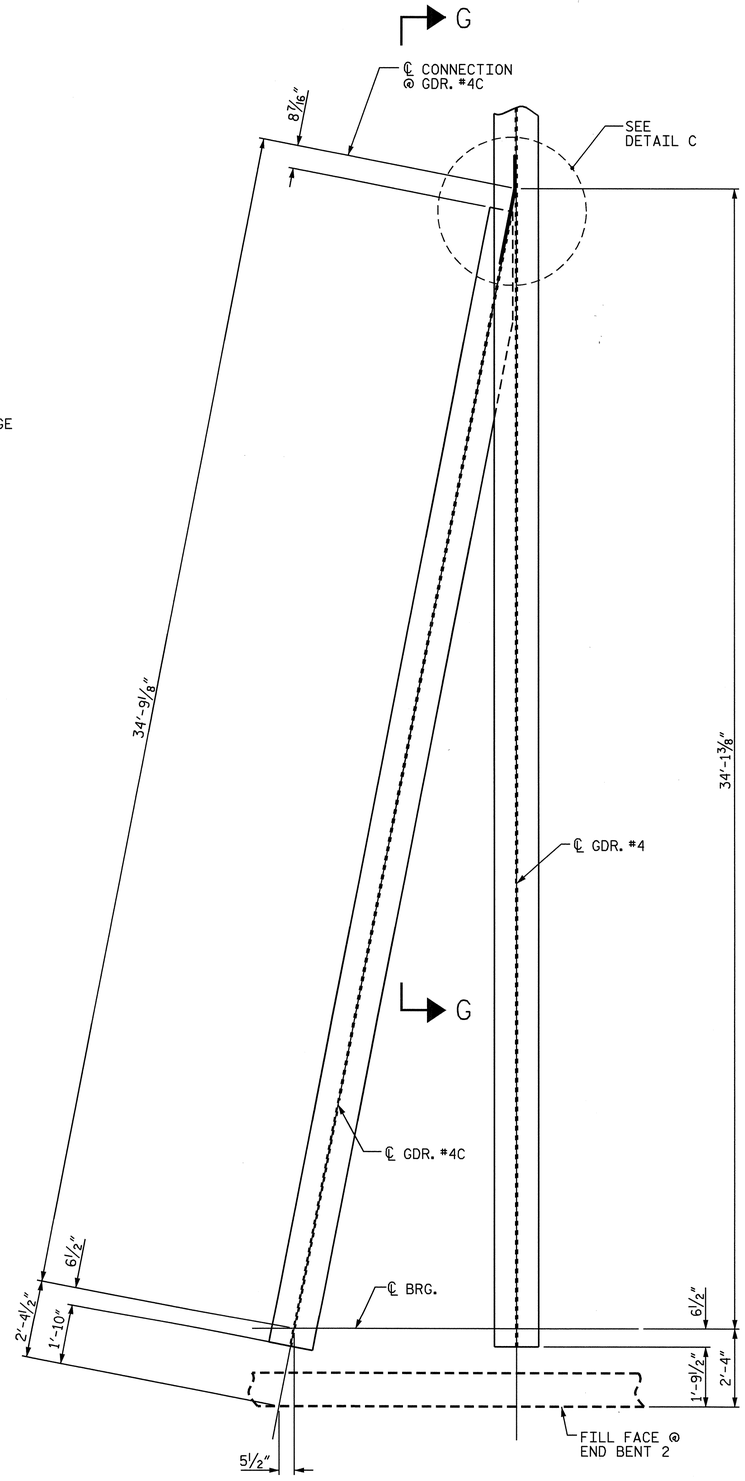


## PLAN VIEW OF GIRDER #4C

(END BENT DIAPHRAGM & BEARING STIFFENERS NOT SHOWN FOR CLARITY)

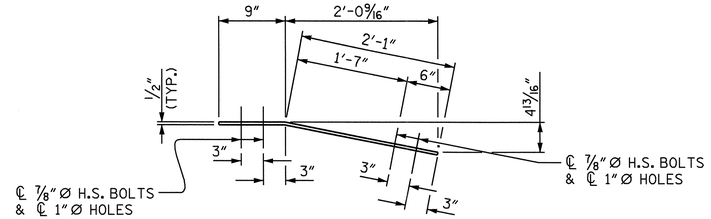


## PLAN VIEW ℄ 3

(1 REQUIRED)

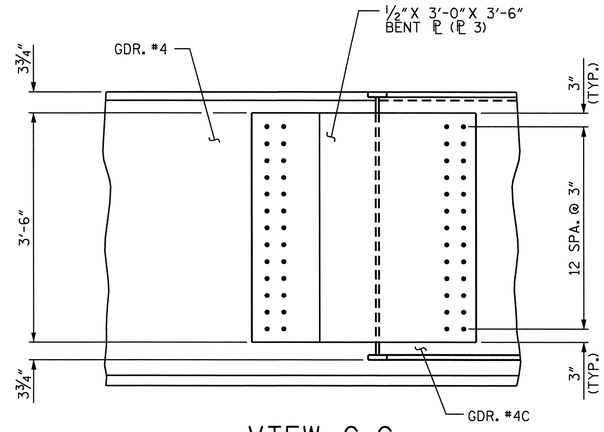


## VIEW G-G

PROJECT NO. B-2848

YANCEY/MITCHELL COUNTY

STATION: 11+97.50 -L-

SHEET 4 OF 10

STATE OF NORTH CAROLINA
DEPARTMENT OF TRANSPORTATION
RALEIGH

SUPERSTRUCTURE

# STRUCTURAL STEEL DETAILS

NORTH CAROLINA PROFESSIONAL SEAL 22005 ENGINEER W. KEITH PASCHAL

11/29/06

| REVISIONS | | | | | | SHEET NO. |
|---|---|---|---|---|---|---|
| NO. | BY: | DATE: | NO. | BY: | DATE: | S-19 |
| 1 | | | 3 | | | TOTAL SHEETS |
| 2 | | | 4 | | | 91 |

DRAWN BY : K. McCAULEY DATE : 3/02/04
CHECKED BY : S. H. SOCKWELL DATE : 10/15/04

31-AUG-2006 12:43
R:\STRUCTGL\ameadows\FINALPGL\B2C3E1GL.DGN
ameadows

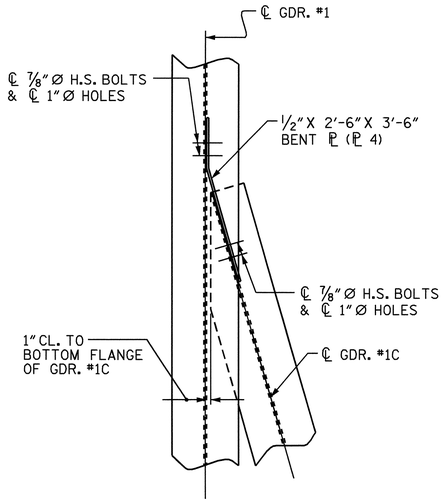


## DETAIL D

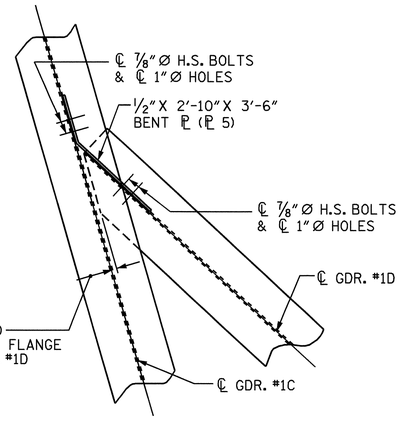


## DETAIL E

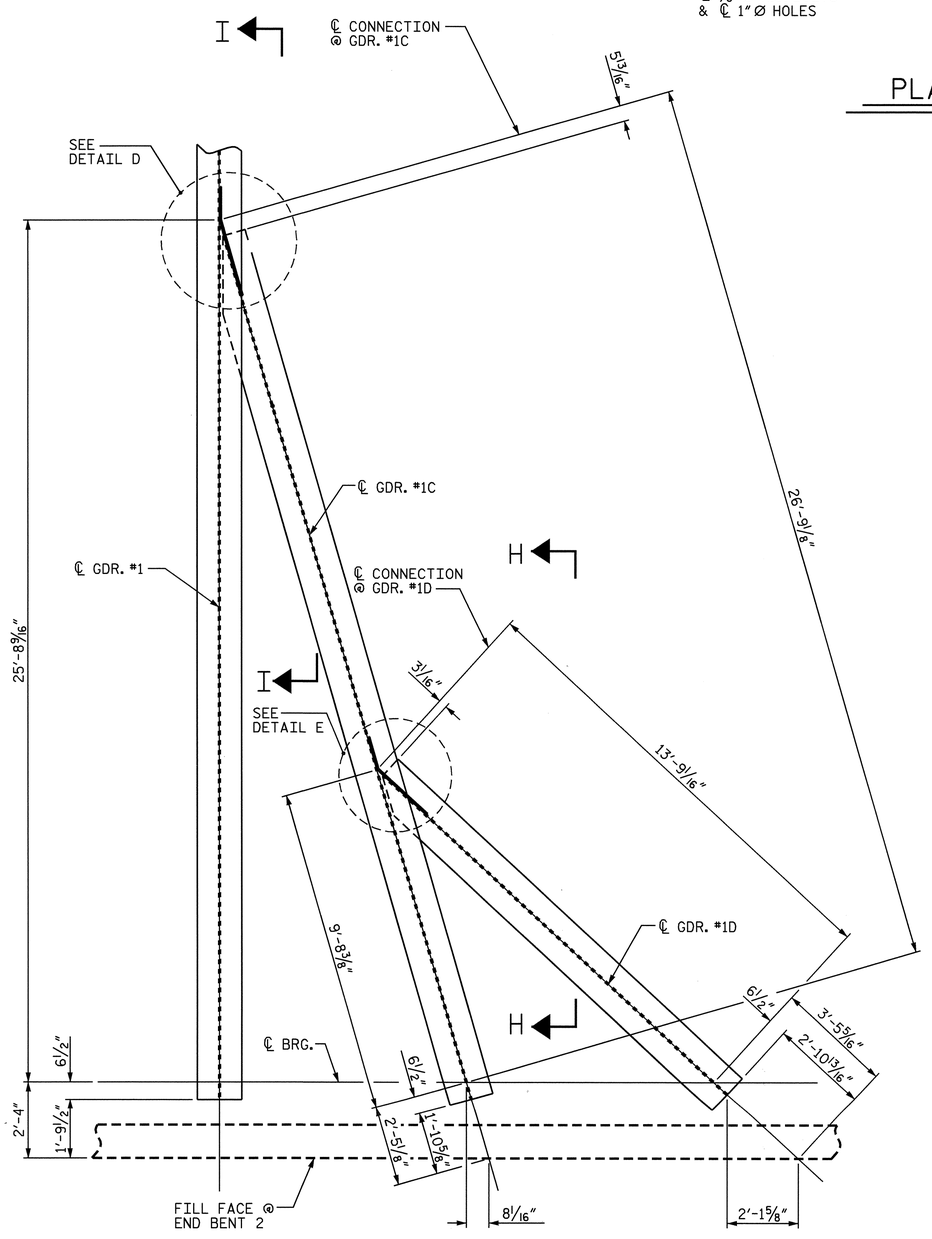


## PLAN VIEW OF GIRDER #1C & #1D

(END BENT DIAPHRAGM & BEARING STIFFENERS NOT SHOWN FOR CLARITY)

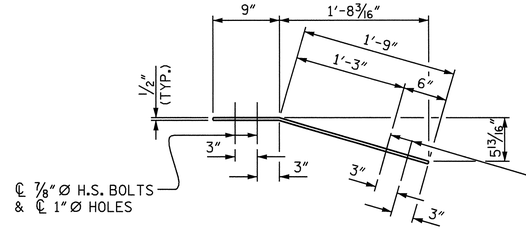


## PLAN VIEW ℙ 4

(1 REQUIRED)

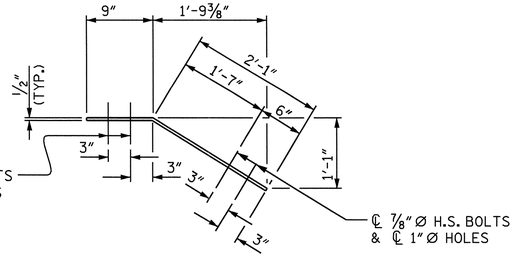


## PLAN VIEW ℙ 5

(1 REQUIRED)

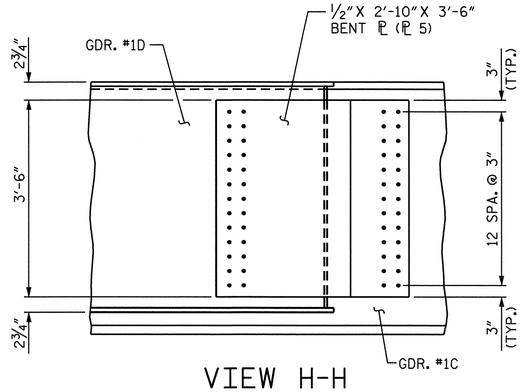


## VIEW H-H

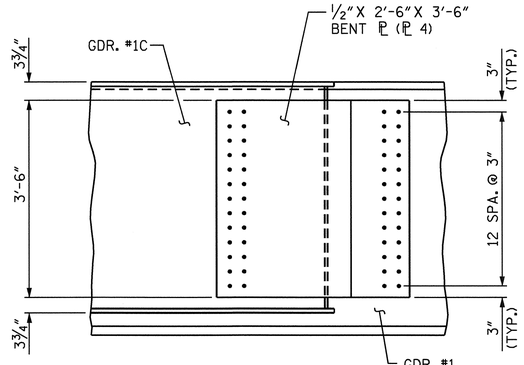


## VIEW I-I

PROJECT NO. B-2848

YANCEY/MITCHELL COUNTY

STATION: 11+97.50 -L-

SHEET 5 OF 10

STATE OF NORTH CAROLINA
DEPARTMENT OF TRANSPORTATION
RALEIGH

SUPERSTRUCTURE

# STRUCTURAL STEEL DETAILS

NORTH CAROLINA PROFESSIONAL SEAL 22005 ENGINEER KEITH PASCHAL

11/29/06

| REVISIONS | | | | | | SHEET NO. |
|---|---|---|---|---|---|---|
| NO. | BY: | DATE: | NO. | BY: | DATE: | S-20 |
| 1 | | | 3 | | | TOTAL SHEETS |
| 2 | | | 4 | | | 91 |

DRAWN BY : K. McCAULEY DATE : 3/02/04
CHECKED BY : S. H. SOCKWELL DATE : 10/15/04

31-AUG-2006 12:42
R:\STRUCTØ1\ameadows\FINALPØ1\B2C3E1Ø1.DGN
ameadows

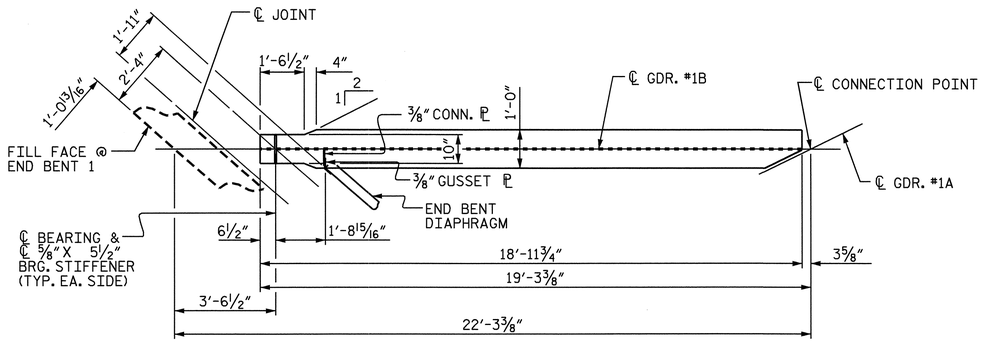


## BOTTOM FLANGE DETAIL

(FOR GIRDER #1B & #4B)

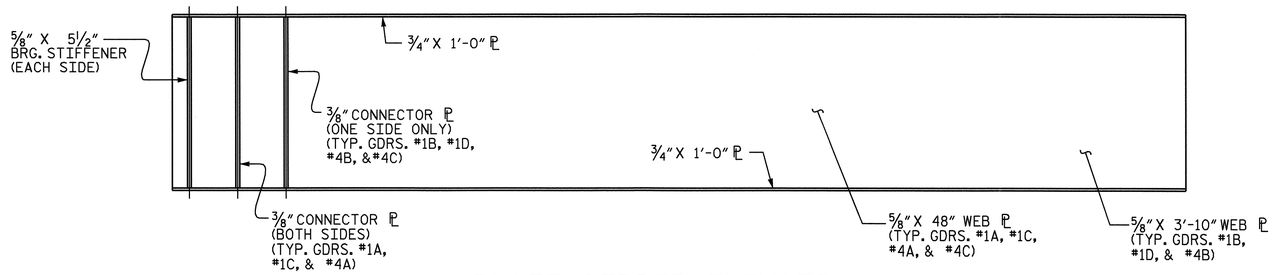


## PLATE GIRDER ELEVATION

(TYP. GIRDERS #1A, #1B, #1C, #1D, #4A, #4B, & #4C)

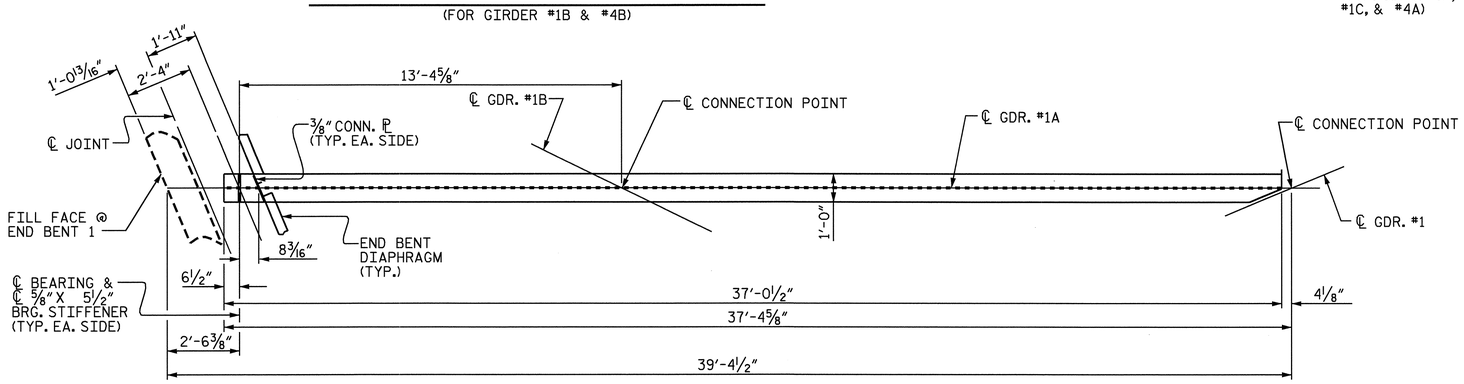


## BOTTOM FLANGE DETAIL

(FOR GIRDER #1A & #4A)

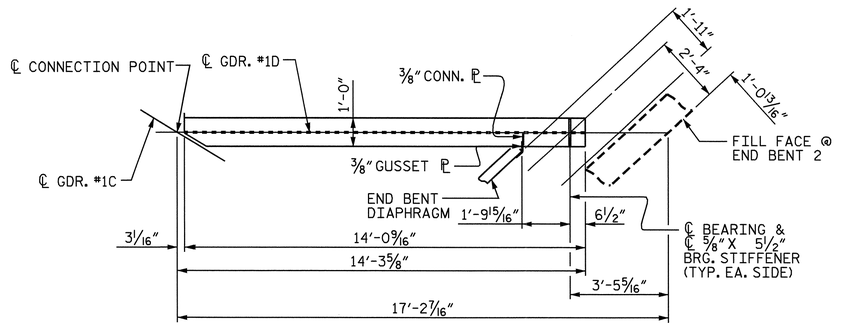


## BOTTOM FLANGE DETAIL

(FOR GIRDER #1D)

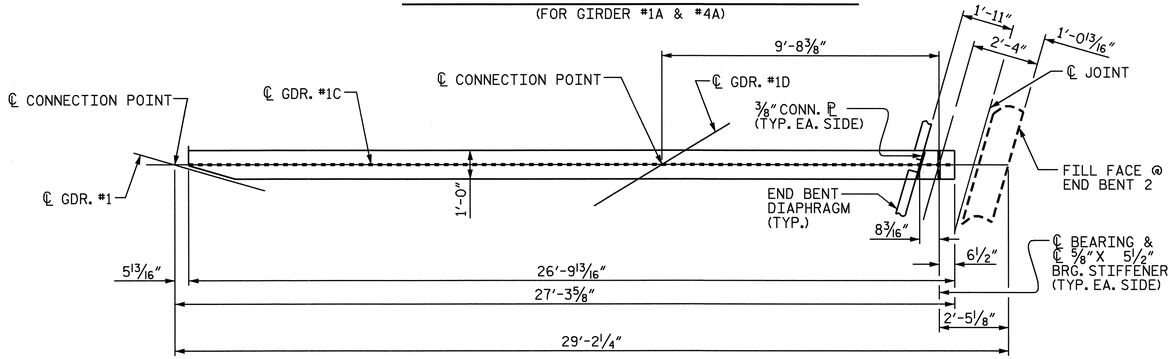


## BOTTOM FLANGE DETAIL

(FOR GIRDER #1C)

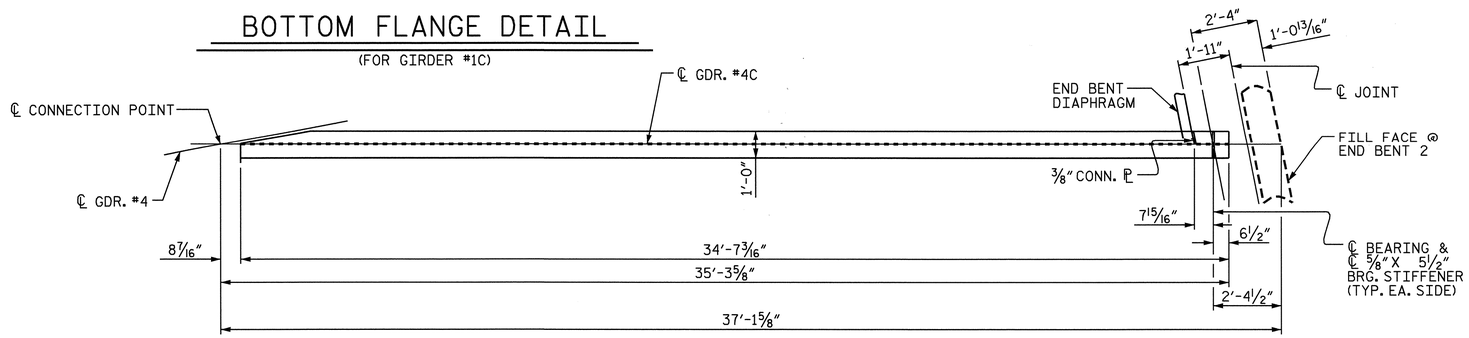


## BOTTOM FLANGE DETAIL

(FOR GIRDER #4C)

NORTH CAROLINA PROFESSIONAL SEAL 27005 ENGINEER A. KEITH PASCHAL

11/29/06

PROJECT NO. B-2848

YANCEY/MITCHELL COUNTY

STATION: 11+97.50 -L-

SHEET 6 OF 10

STATE OF NORTH CAROLINA
DEPARTMENT OF TRANSPORTATION
RALEIGH

SUPERSTRUCTURE

# STRUCTURAL STEEL DETAILS

| REVISIONS | | | | | | SHEET NO. |
|---|---|---|---|---|---|---|
| NO. | BY: | DATE: | NO. | BY: | DATE: | S-21 |
| 1 | | | 3 | | | TOTAL SHEETS |
| 2 | | | 4 | | | 91 |

DRAWN BY : K. McCAULEY DATE : 3/04/04
CHECKED BY : S. H. SOCKWELL DATE : 10/15/04

29-NOV-2006 09:46
F:\STRUCT01\ameadows\FINALP01\B2C3E101.DGN
ameadows

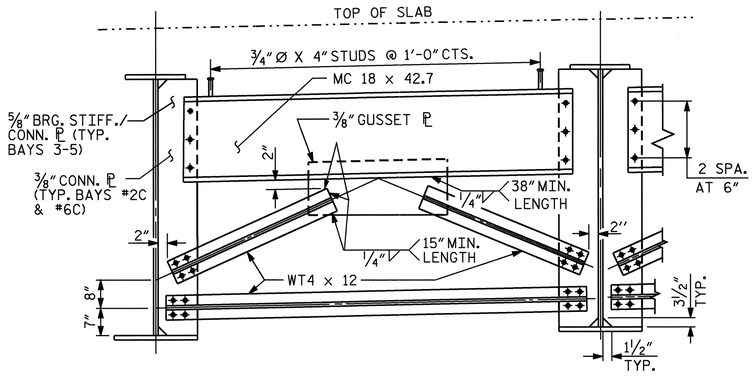


## TYPICAL END BENT DIAPHRAGM (D1)

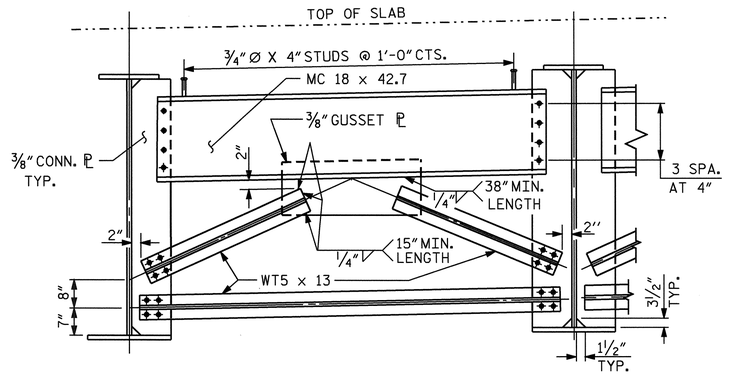


## TYPICAL END BENT DIAPHRAGM (D2)

(BAYS 2A & 6A)

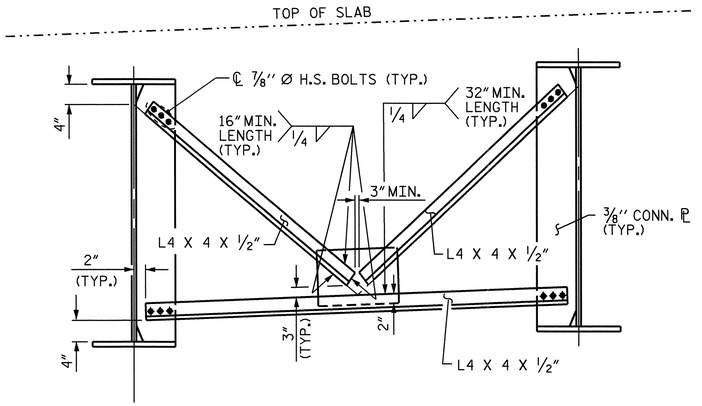


## TYPICAL BENT DIAPHRAGM (D3)

(BAYS 3-5)

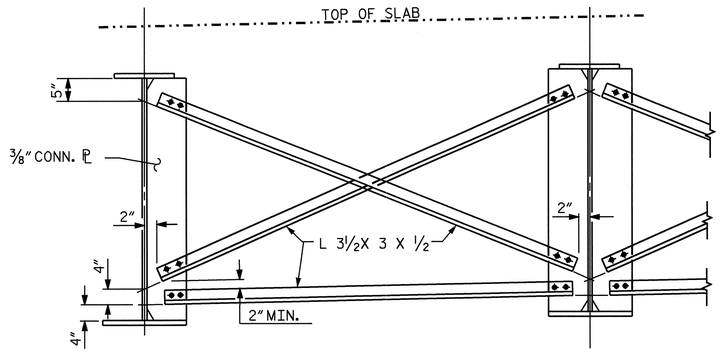


## TYPICAL INTERMEDIATE DIAPHRAGM (D4, D5, D6)

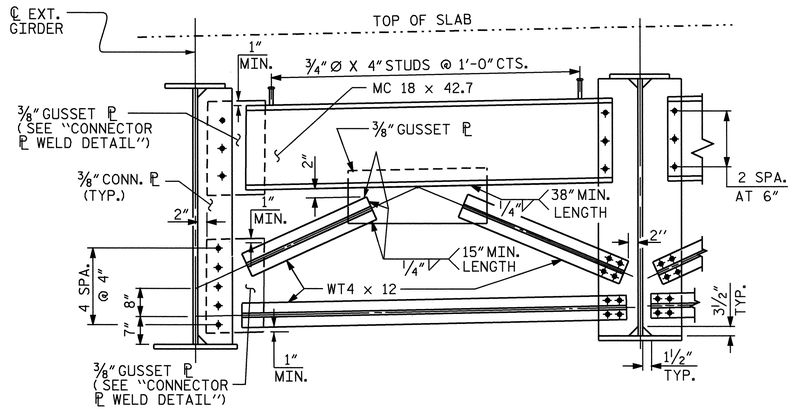


## TYPICAL END BENT DIAPHRAGM (D7)

(BAYS #1A, #7A, & #1C)

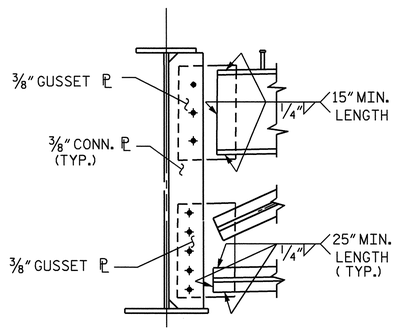


PART SECTION

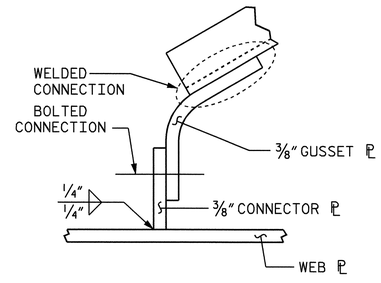


PART PLAN

## CONNECTOR ℄ WELD DETAIL

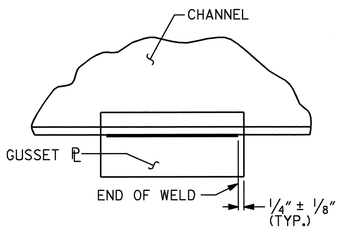


TYPICAL GUESSET PLATE CONNECTION

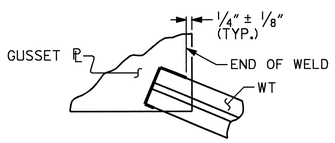


TYPICAL "TEE" TO GUSSET PLATE CONNECTION

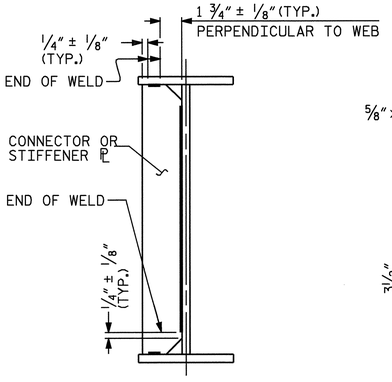


TYPICAL STIFFENER OR CONNECTOR PLATE CONNECTIONS

## WELD TERMINATION DETAILS

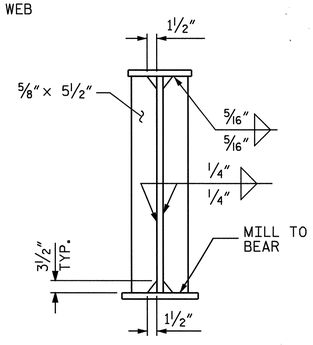


## BEARING STIFFENER

(TYP. GIRDERS #1A THRU #1D & GIRDERS #4A THRU #4C)

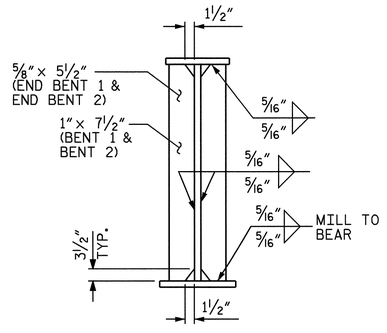


## BEARING STIFFENER/ CONNECTOR PLATE

(TYP. GIRDERS #1 THRU #4)

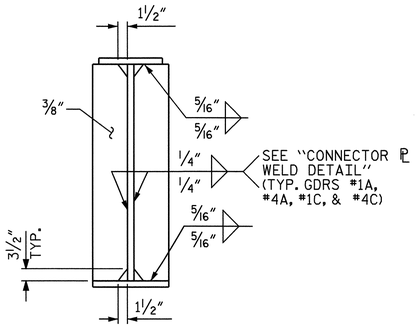


## CONNECTOR PLATE

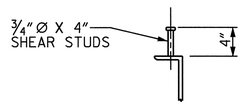


## SHEAR STUD DETAILS

(FOR MC 18 X 42.7)

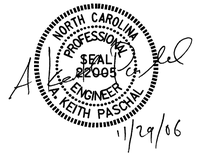


PROJECT NO. B-2848

YANCEY/MITCHELL COUNTY

STATION: 11+97.50 -L-

SHEET 7 OF 10

STATE OF NORTH CAROLINA
DEPARTMENT OF TRANSPORTATION
RALEIGH

SUPERSTRUCTURE

# STRUCTURAL STEEL DETAILS

| REVISIONS | | | | | | SHEET NO. |
|---|---|---|---|---|---|---|
| NO. | BY: | DATE: | NO. | BY: | DATE: | S-22 |
| 1 | | | 3 | | | TOTAL SHEETS |
| 2 | | | 4 | | | 91 |

DRAWN BY : K. McCAULEY DATE : 2/27/04
CHECKED BY : S. H. SOCKWELL DATE : 10/15/04

29-NOV-2006 09:23
F:\STRUCT01\ameadows\FINALP01\B2C3E101.DGN
ameadows

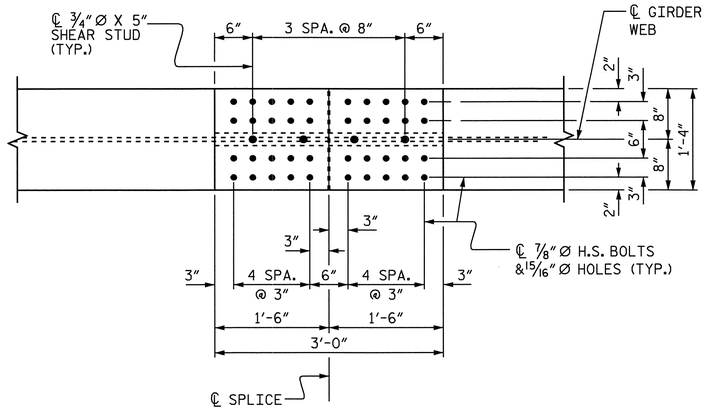


PLAN (TOP OF TOP FLANGE)

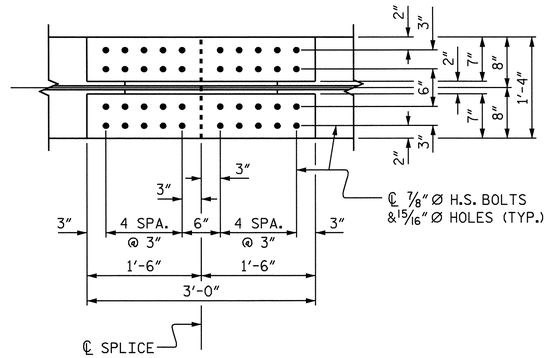


PLAN (TOP OF BOTTOM FLANGE)

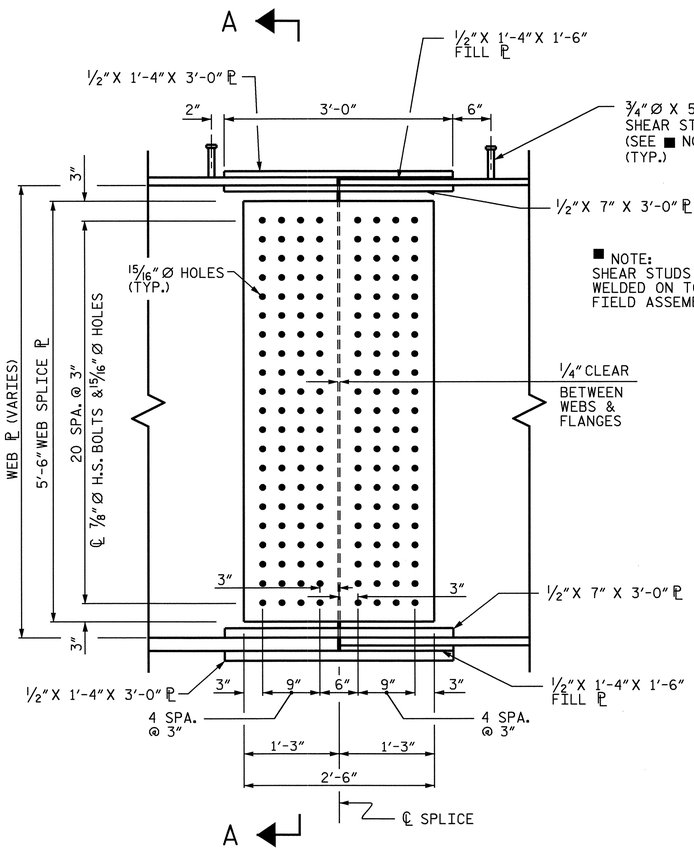


ELEVATION

■ NOTE:
SHEAR STUDS ARE TO BE SHOP WELDED ON TOP OF PLATE BEFORE FIELD ASSEMBLY.

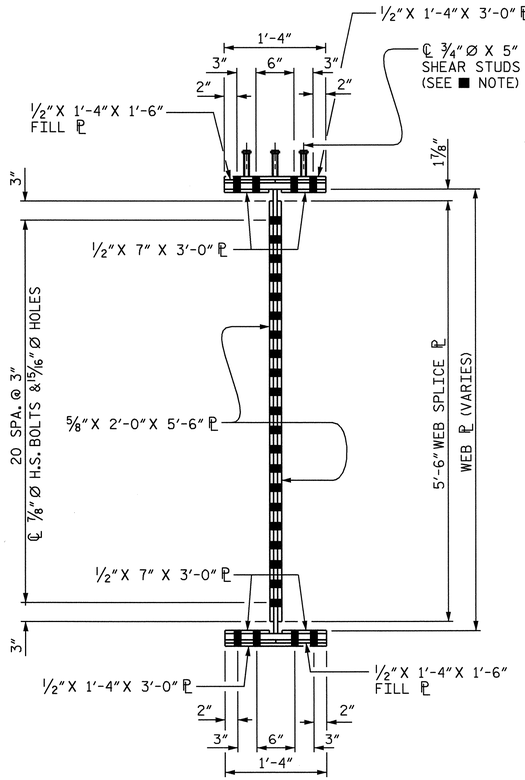


SECTION A-A

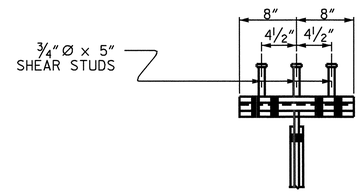


SHEAR STUD DETAIL FOR TOP FLANGE SPLICE PLATE

# BOLTED FIELD SPLICE #1 DETAIL

PROJECT NO. B-2848
YANCEY/MITCHELL COUNTY
STATION: 11+97.50 -L-

SHEET 8 OF 10

STATE OF NORTH CAROLINA
DEPARTMENT OF TRANSPORTATION
RALEIGH

SUPERSTRUCTURE

STRUCTURAL STEEL DETAILS

BOLTED FIELD SPLICE #1

NORTH CAROLINA PROFESSIONAL SEAL 22005 ENGINEER ALAN KEITH PASCHAL
11/29/06

| REVISIONS | | | | | | SHEET NO. |
|---|---|---|---|---|---|---|
| NO. | BY: | DATE: | NO. | BY: | DATE: | S-23 |
| 1 | | | 3 | | | TOTAL SHEETS |
| 2 | | | 4 | | | 91 |

DRAWN BY : K. McCAULEY DATE : 3/22/04
CHECKED BY : S. H. SOCKWELL DATE : 10/15/04

06-OCT-2006 11:41
R:\STRUCT01\ameadows\FINALP01\B2C3E101.DGN
ameadows

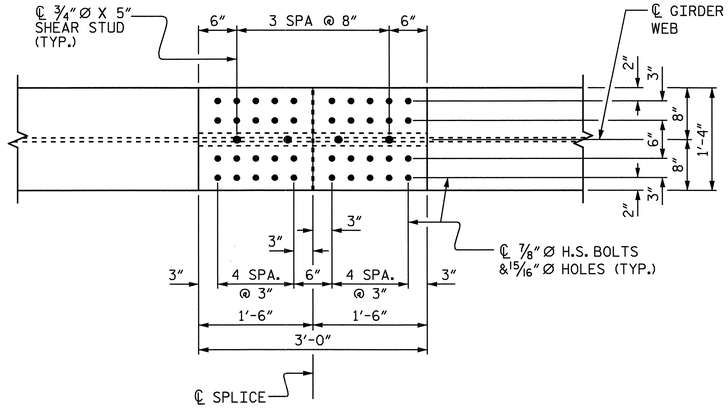


PLAN (TOP OF TOP FLANGE)

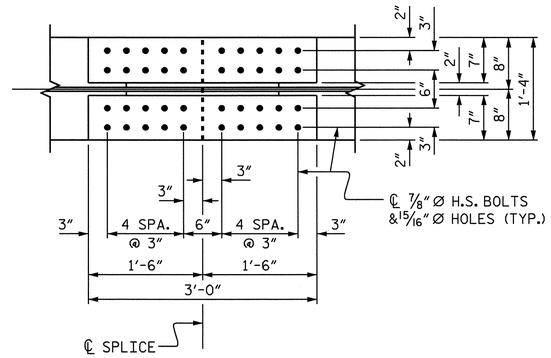


PLAN (TOP OF BOTTOM FLANGE)

■ NOTE:
SHEAR STUDS ARE TO BE SHOP WELDED ON TOP OF PLATE BEFORE FIELD ASSEMBLY.

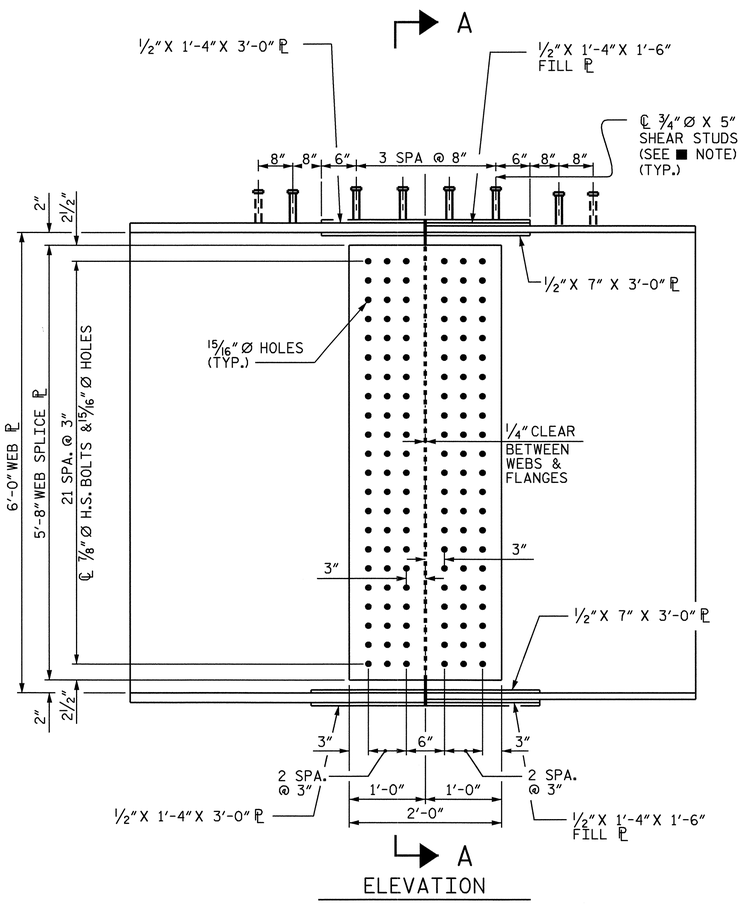


ELEVATION

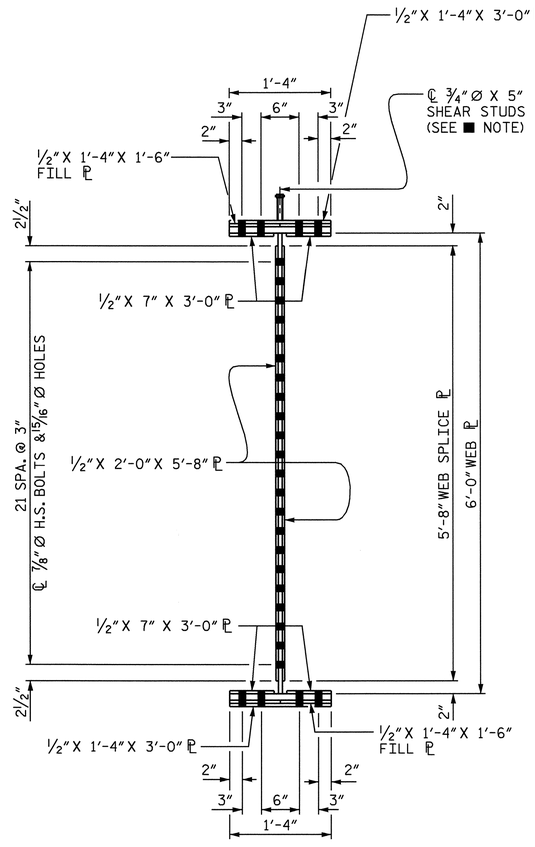


SECTION A-A

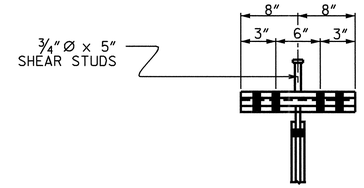


SHEAR STUD DETAIL FOR TOP FLANGE SPLICE PLATE

# BOLTED FIELD SPLICES #2 & #3 DETAIL

DRAWN BY : K. McCAULEY/JGK DATE : 3/22/04
CHECKED BY : S. H. SOCKWELL DATE : 10/15/04

31-AUG-2006 12:41
R:\STRUCTØ1\ameadows\FINALPØ1\B2C3E1Ø1.DGN
ameadows

NORTH CAROLINA PROFESSIONAL SEAL 22005 ENGINEER W. KEITH PASCHAL
A 11/29/06

PROJECT NO. B-2848
YANCEY/MITCHELL COUNTY
STATION: 11+97.50 -L-

SHEET 9 OF 10

STATE OF NORTH CAROLINA
DEPARTMENT OF TRANSPORTATION
RALEIGH
SUPERSTRUCTURE
STRUCTURAL STEEL DETAILS
BOLTED FIELD SPLICES #2 & #3

| REVISIONS | | | | | | SHEET NO. |
|---|---|---|---|---|---|---|
| NO. | BY: | DATE: | NO. | BY: | DATE: | S-24 |
| 1 | | | 3 | | | TOTAL SHEETS |
| 2 | | | 4 | | | 91 |

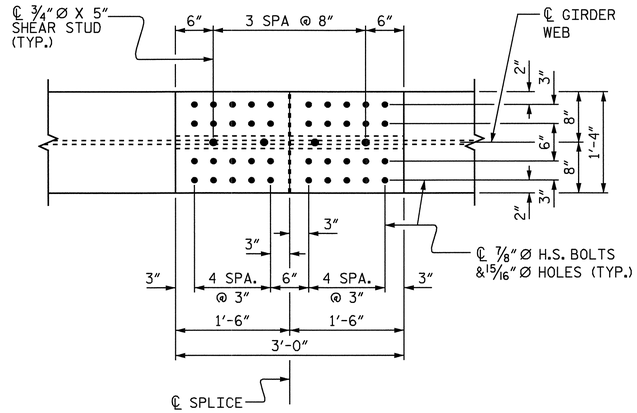


PLAN (TOP OF TOP FLANGE)

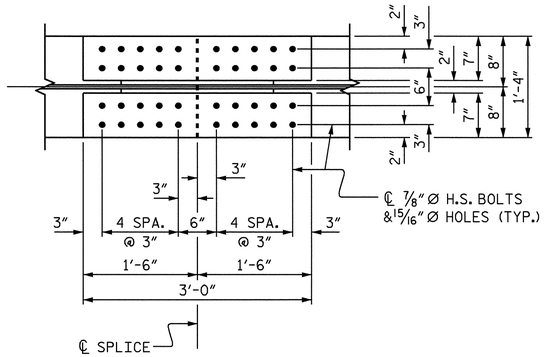


PLAN (TOP OF BOTTOM FLANGE)

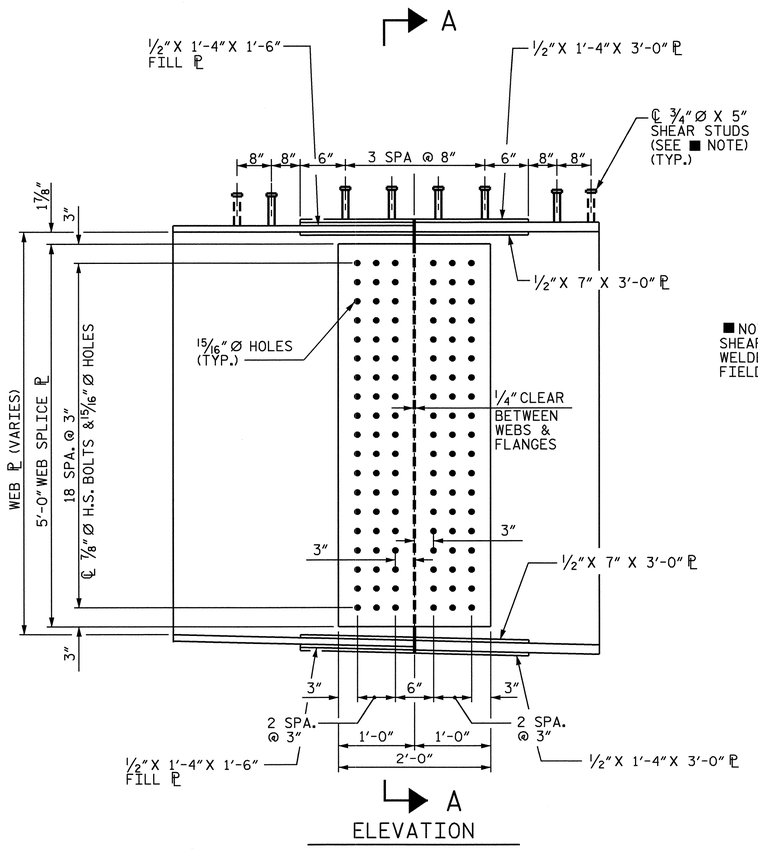


ELEVATION

■NOTE:
SHEAR STUDS ARE TO BE SHOP WELDED ON TOP OF PLATE BEFORE FIELD ASSEMBLY.

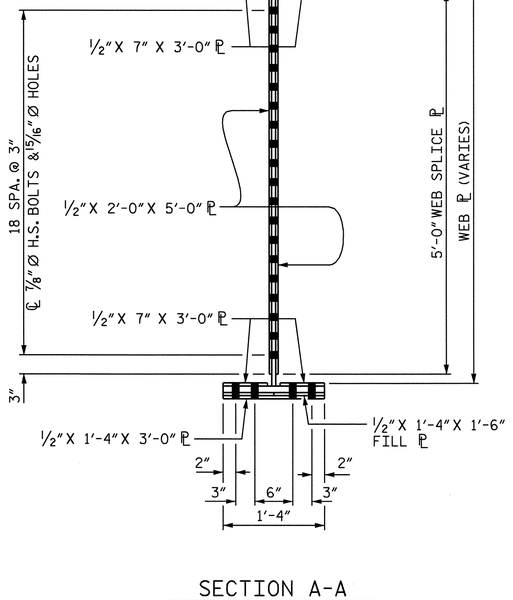


SECTION A-A

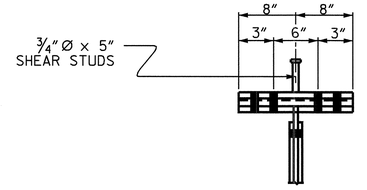


SHEAR STUD DETAIL FOR TOP FLANGE SPLICE PLATE

# BOLTED FIELD SPLICE #4 DETAIL

DRAWN BY : K. McCAULEY DATE : 3/22/04
CHECKED BY : S. H. SOCKWELL DATE : 10/15/04

31-AUG-2006 14:41
R:\STRUCT01\ameadows\FINALP01\B2C3E101.DGN
ameadows

NORTH CAROLINA PROFESSIONAL SEAL 022005 ENGINEER A. KEITH PASCHAL
11/29/06

PROJECT NO. B-2848
YANCEY/MITCHELL COUNTY
STATION: 11+97.50 -L-

SHEET 10 OF 10

STATE OF NORTH CAROLINA
DEPARTMENT OF TRANSPORTATION
RALEIGH

SUPERSTRUCTURE

STRUCTURAL STEEL DETAILS

BOLTED FIELD SPLICE #4

| REVISIONS | | | | | | SHEET NO. |
|---|---|---|---|---|---|---|
| NO. | BY: | DATE: | NO. | BY: | DATE: | S-25 |
| 1 | | | 3 | | | TOTAL SHEETS |
| 2 | | | 4 | | | 91 |

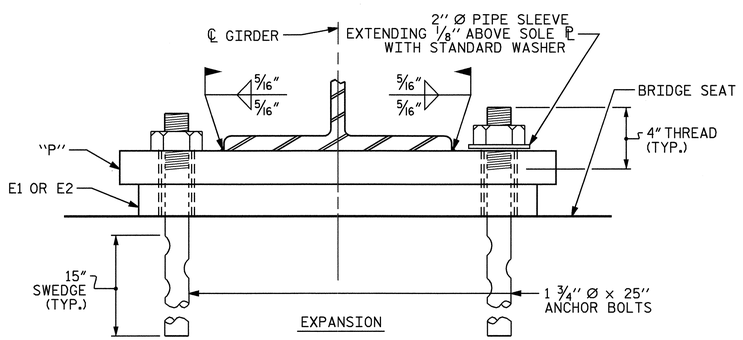


END VIEW

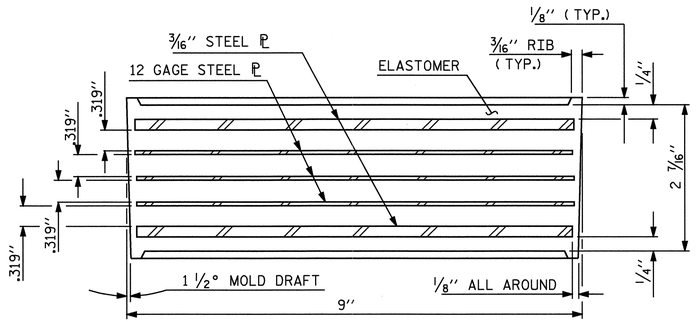


TYPICAL SECTION OF ELASTOMERIC BEARINGS

TYPE II




TYPE II | TYPE II | TYPE III | TYPE III | TYPE III | TYPE III

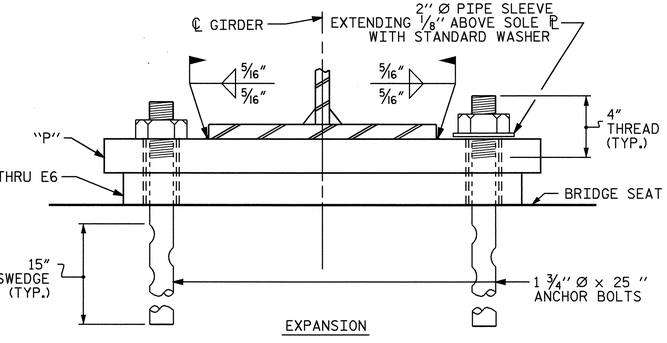


END VIEW

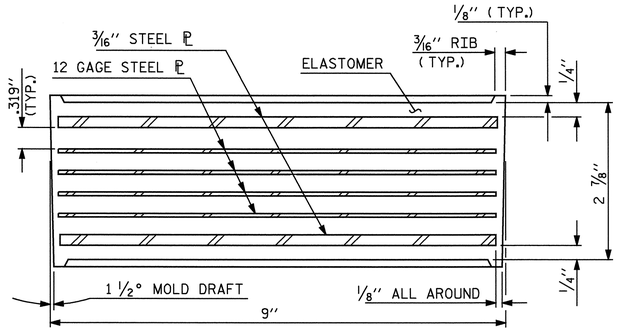


TYPICAL SECTION OF ELASTOMERIC BEARINGS

TYPE III

| -LOAD RATINGS- | |
|---|---|
| | MAX. D.L.+L.L. |
| TYPE II | 119 K |
| TYPE III | 144 K |

## NOTES

AT ALL FIXED POINTS OF SUPPORT, NUTS FOR ANCHOR BOLTS ARE TO BE TIGHTENED FINGER TIGHT AND THEN BACKED OFF 1/2 TURN. THE THREAD OF THE NUT AND BOLT SHALL THEN BE BURRED WITH A SHARP POINTED TOOL.

THE 2'' Ø PIPE SLEEVE SHALL BE CUT FROM SCHEDULE 40 PVC PLASTIC PIPE. THE PVC PLASTIC PIPE SHALL MEET THE REQUIREMENTS OF ASTM D1785.

THE PAYMENT FOR THE PIPE SLEEVES SHALL BE INCLUDED IN THE SEVERAL PAY ITEMS.

FOR AASHTO M270 GRADE 50W STRUCTURAL STEEL, SOLE PLATE SHALL BE AASHTO M270 GRADE 50W AND SHALL NOT BE GALVANIZED. ANCHOR BOLTS, NUTS AND WASHERS SHALL BE GALVANIZED IN ACCORDANCE WITH THE STANDARD SPECIFICATIONS.

ANCHOR BOLTS SHALL MEET THE REQUIREMENTS OF ASTM A449. NUTS SHALL MEET THE REQUIREMENTS OF AASHTO M291-DH OR AASHTO M292-2H. WASHERS SHALL MEET THE REQUIREMENTS OF AASHTO M293. SHOP DRAWINGS ARE NOT REQUIRED FOR ANCHOR BOLTS, NUTS AND WASHERS. SHOP INSPECTION IS REQUIRED.

WHEN FIELD WELDING THE SOLE PLATE TO THE GIRDER FLANGE, USE TEMPERATURE INDICATING WAX PENS, OR OTHER SUITABLE MEANS, TO ENSURE THAT THE TEMPERATURE OF THE SOLE PLATE DOES NOT EXCEED 300°F. TEMPERATURES ABOVE THIS MAY DAMAGE THE ELASTOMER.

ALL SURFACES OF BEARING PLATES SHALL BE SMOOTH AND STRAIGHT.

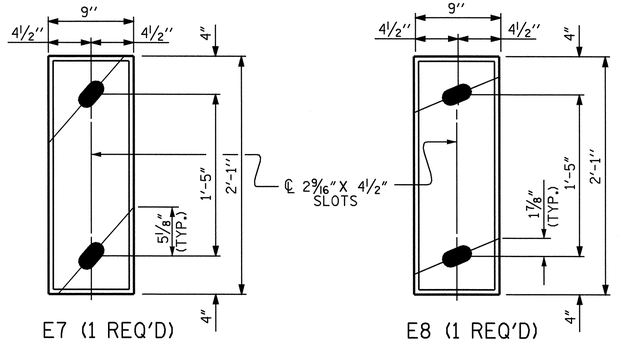


TYPE III | TYPE III

NORTH CAROLINA PROFESSIONAL SEAL 22005 ENGINEER K. KEITH PASCHAL

11/29/06

PROJECT NO. B-2848

YANCEY/MITCHELL COUNTY

STATION: 11+97.50 -L-

SHEET 1 OF 2

PLAN VIEW OF ELASTOMERIC BEARINGS

| | | | |
|---|---|---|---|
| ASSEMBLED BY : K. McCAULEY | | DATE : 2/27/04 | |
| CHECKED BY : S. H. SOCKWELL | | DATE : 10/15/04 | |
| DRAWN BY : JMB 11/87 | REV. 7/17/98 | RWW/LES | |
| CHECKED BY : ARB 11/87 | REV. 8/16/99 | MAB/LES | |
| | REV. 10/17/00 | RWW/LES | |

STATE OF NORTH CAROLINA
DEPARTMENT OF TRANSPORTATION
RALEIGH

# ELASTOMERIC BEARING DETAILS

( STEEL SUPERSTRUCTURE )

FEB. 1988

| REVISIONS | | | | | | SHEET NO. |
|---|---|---|---|---|---|---|
| NO. | BY: | DATE: | NO. | BY: | DATE: | S-26 |
| 1 | | | 3 | | | TOTAL SHEETS |
| 2 | | | 4 | | | 91 |

STD.No.EB1

27-NOV-2006 12:34
R:\Structures\ameadows\FINAL PLANS\B2848_sd_BG_01.dgn
Kpaschal

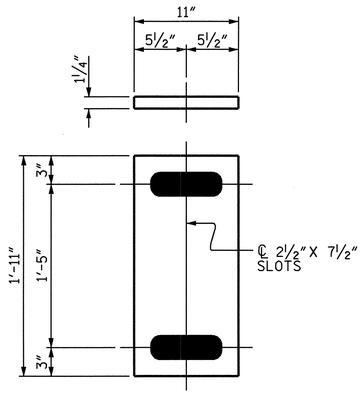


P1 (2 REQ'D)

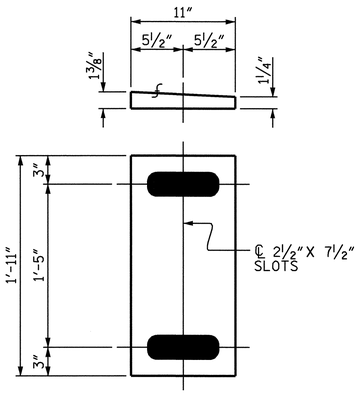


P2 (6 REQ'D)

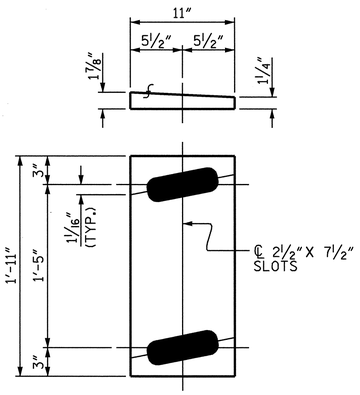


P3 (1 REQ'D)

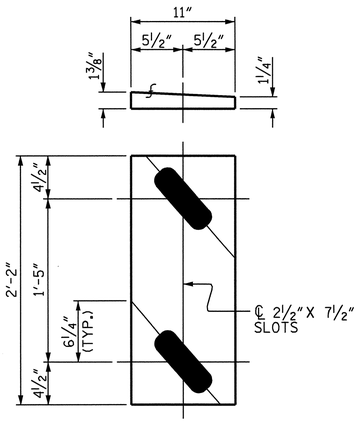


P4 (1 REQ'D)

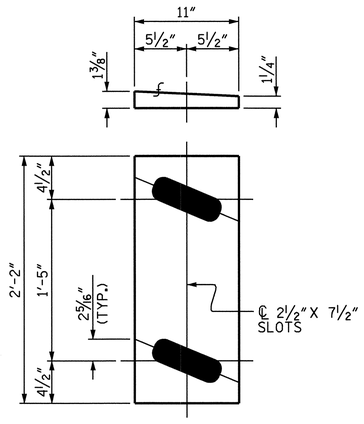


P5 (1 REQ'D)

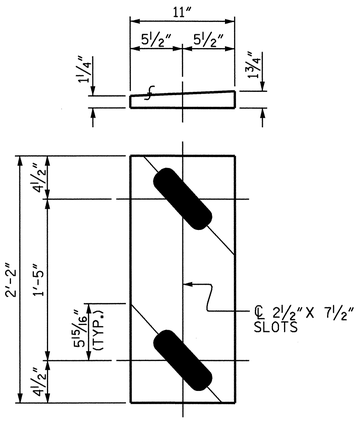


P6 (1 REQ'D)

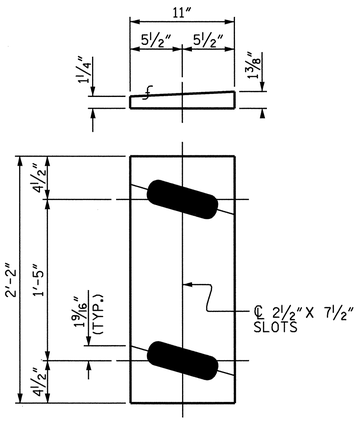


P7 (1 REQ'D)

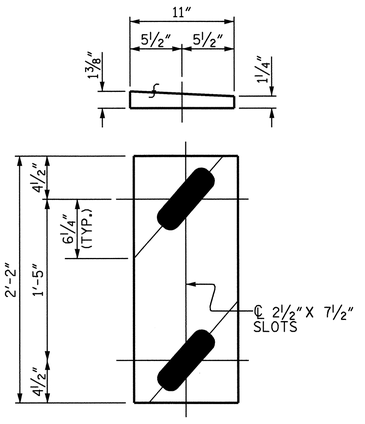


P8 (1 REQ'D)

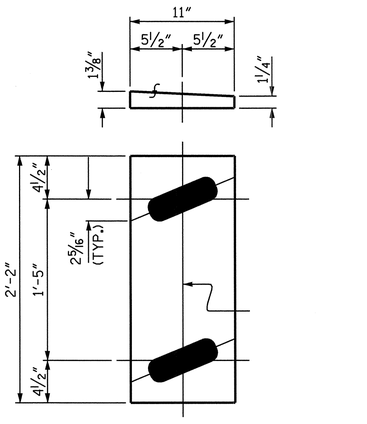


P9 (1 REQ'D)

## SOLE PLATE DETAILS ( "P" )

PROJECT NO. B-2848

YANCEY/MITCHELL COUNTY

STATION: 11+97.50 -L-

SHEET 2 OF 2

STATE OF NORTH CAROLINA
DEPARTMENT OF TRANSPORTATION
RALEIGH

# ELASTOMERIC BEARING DETAILS

( STEEL SUPERSTRUCTURE )

NORTH CAROLINA PROFESSIONAL SEAL 22005 ENGINEER KEITH PASCAL

11/29/06

| REVISIONS | | | | | | SHEET NO. |
|---|---|---|---|---|---|---|
| NO. | BY: | DATE: | NO. | BY: | DATE: | S-27 |
| 1 | | | 3 | | | TOTAL SHEETS |
| 2 | | | 4 | | | 91 |

DRAWN BY : K. McCAULEY DATE : 5/26/04
CHECKED BY : S. H. SOCKWELL DATE : 10/15/04

06-OCT-2006 08:46
R:\STRUCTØ1\ameadows\FINALPØ1\B2848_ØØ.DGN
ameadows

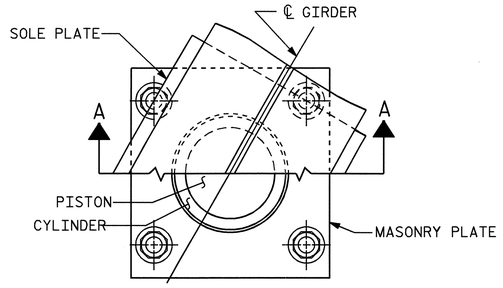


CUT-AWAY PLAN

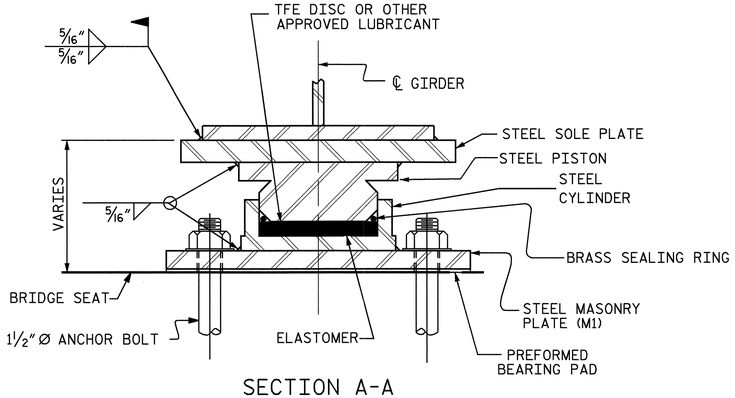


SECTION A-A

PB1, FIXED
( 8 REQ'D. )

## POT BEARING DETAILS

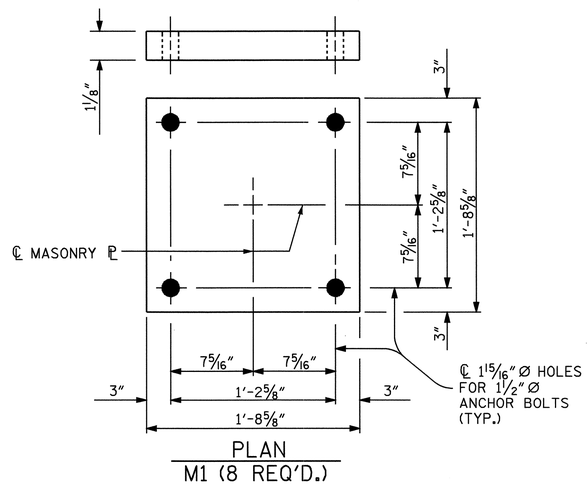


PLAN
M1 (8 REQ'D.)

## MASONRY PLATE DETAILS

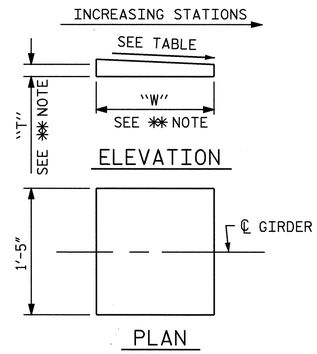


PLAN

✳✳ NOTE:
DIMENSIONS "W" AND "T" ARE TO BE DETERMINED BY THE MANUFACTURER.

## SOLE PLATE DETAILS

### % SLOPES

| | SOLE ℄ No. | NUMBER REQ'D | % SLOPE |
|---|---|---|---|
| BENT 1 | P8 | 4 | 1.35% SLOPE |
| BENT 2, GDR. #1 | P9 | 1 | 0.96% SLOPE |
| BENT 2, GDR. #2 | P10 | 1 | 1.10% SLOPE |
| BENT 2, GDR. #3 | P11 | 1 | 1.23% SLOPE |
| BENT 2, GDR. #4 | P12 | 1 | 1.37% SLOPE |

### TABLE FOR LOADS AND MOVEMENTS

| BEARING | LOCATION | VERTICAL LOAD (KIPS) | | | LATERAL LOAD (KIPS) | TOTAL MOVEMENT (INCHES) |
|---|---|---|---|---|---|---|
| | | DEAD | LIVE | TOTAL | | |
| PB1 (FIXED) | BENT #1 | 252 | 76 | 328 | 33 | ——— |
| PB1 (FIXED) | BENT #2 | 280 | 79 | 359 | 36 | ——— |
| | | | | | | |

## NOTES

FOR POT BEARINGS, SEE SPECIAL PROVISIONS.

AT ALL POINTS OF SUPPORT, NUTS FOR ANCHOR BOLTS SHALL BE TIGHTENED FINGER TIGHT AND GIVEN AN ADDITIONAL ¼ TURN. THE THREAD OF THE NUT AND BOLT SHALL THEN BE BURRED WITH A SHARP POINTED TOOL.

WHEN WELDING THE SOLE PLATE TO THE GIRDER, USE TEMPERATURE INDICATING WAX PENS, OR OTHER SUITABLE MEANS, TO ENSURE THAT THE TEMPERATURE OF THE BEARING DOES NOT EXCEED 250°F TEMPERATURES ABOVE THIS MAY DAMAGE THE TFE OR ELASTOMER.

ALL SURFACES OF BEARING PLATES SHALL BE SMOOTH AND STRAIGHT.

FOR THERMAL SPRAYED COATINGS (METALLIZATION), SEE SPECIAL PROVISIONS.

THE CONTRACTOR MAY SUBSTITUTE DISC BEARINGS FOR THE POT BEARINGS SHOWN. FOR OPTIONAL DISC BEARINGS, SEE SPECIAL PROVISIONS.

PROJECT NO. B-2848
YANCEY/MITCHELL COUNTY
STATION: 11+97.50-L-

NORTH CAROLINA PROFESSIONAL SEAL 22004 ENGINEER A. KEITH PASCHAL
11/29/06

STATE OF NORTH CAROLINA
DEPARTMENT OF TRANSPORTATION
RALEIGH

STANDARD

# POT BEARING DETAILS

| REVISIONS | | | | | | SHEET NO. |
|---|---|---|---|---|---|---|
| NO. | BY: | DATE: | NO. | BY: | DATE: | S-28 |
| 1 | | | 3 | | | TOTAL SHEETS |
| 2 | | | 4 | | | 91 |

| | |
|---|---|
| ASSEMBLED BY : K. McCAULEY | DATE : 2/25/04 |
| CHECKED BY : S. H. SOCKWELL | DATE : 10/15/04 |
| DRAWN BY : RWW 8/99 | REV. 10/17/00 RWW/LES |
| CHECKED BY : LES 8/99 | REV. 7/10/01 LES/RDR |
| | REV. 5/7/03 RWW/JTE |

31-AUG-2006 12:39
R:\STRUCTØ1\ameadows\FINALPØ1\B2848_Ø3.DGN
ameadows

PB1.STD

| DEAD LOAD DEFLECTION FOR GIRDERS | | | | | | | | | | | |
|---|---|---|---|---|---|---|---|---|---|---|---|
| | SPAN A | | | | | | | | | | |
| | GIRDER 1 | | | | | | | | | | |
| TENTH POINTS | 0 | .10 | .20 | .30 | .40 | .50 | .60 | .70 | .80 | .90 | 0 |
| DEFLECTION DUE TO WEIGHT OF GIRDER | 0.000 | -0.002 | -0.004 | -0.006 | -0.008 | -0.010 | -0.011 | -0.011 | -0.010 | -0.006 | 0.000 |
| DEFLECTION DUE TO WEIGHT OF SLAB * | 0.000 | 0.002 | 0.002 | -0.001 | -0.005 | -0.010 | -0.015 | -0.018 | -0.018 | -0.012 | 0.000 |
| DEFLECTION DUE TO WEIGHT OF BARRIER RAIL | 0.000 | -0.000 | -0.001 | -0.001 | -0.002 | -0.003 | -0.004 | -0.005 | -0.003 | -0.002 | 0.000 |
| TOTAL DEAD LOAD DEFLECTION | 0.000 | -0.001 | -0.003 | -0.008 | -0.015 | -0.023 | -0.030 | -0.034 | -0.031 | -0.020 | 0.000 |
| | | | | | | | | | | | |
| VERTICAL CURVE ORDINATE | 0.000 | 0.000 | 0.000 | 0.000 | 0.000 | 0.000 | 0.000 | 0.000 | 0.000 | 0.000 | 0.000 |
| ORDINATE DUE TO SUPERELEVATION | 0.000 | 0.017 | 0.034 | 0.051 | 0.063 | 0.053 | 0.042 | 0.032 | 0.021 | 0.011 | 0.000 |
| | | | | | | | | | | | |
| REQUIRED CAMBER | 0 | 3/16" | 3/8" | 1/2" | 9/16" | 3/8" | 1/8" | 0 | -1/8" | -1/8" | 0 |

* INCLUDES SLAB, BUILDUPS & STAY-IN-PLACE FORMS.
ALL VALUES ARE SHOWN IN FEET (DECIMAL FORM), EXCEPT "FINAL CAMBER" WHICH IS SHOWN IN INCHES (FRACTION FORM).
NEGATIVE DEFLECTIONS ARE UPWARD, NEGATIVE CAMBERS ARE DOWNWARD.

| DEAD LOAD DEFLECTION FOR GIRDERS | | | | | | | | | | | |
|---|---|---|---|---|---|---|---|---|---|---|---|
| | SPAN A | | | | | | | | | | |
| | GIRDER 2 | | | | | | | | | | |
| TENTH POINTS | 0 | .10 | .20 | .30 | .40 | .50 | .60 | .70 | .80 | .90 | 0 |
| DEFLECTION DUE TO WEIGHT OF GIRDER | 0.000 | -0.002 | -0.004 | -0.006 | -0.008 | -0.010 | -0.011 | -0.011 | -0.010 | -0.006 | 0.000 |
| DEFLECTION DUE TO WEIGHT OF SLAB * | 0.000 | -0.001 | -0.003 | -0.007 | -0.012 | -0.017 | -0.021 | -0.023 | -0.021 | -0.014 | 0.000 |
| DEFLECTION DUE TO WEIGHT OF BARRIER RAIL | 0.000 | -0.001 | -0.003 | -0.004 | -0.005 | -0.006 | -0.006 | -0.006 | -0.005 | -0.002 | 0.000 |
| TOTAL DEAD LOAD DEFLECTION | 0.000 | -0.004 | -0.010 | -0.017 | -0.025 | -0.033 | -0.038 | -0.040 | -0.036 | -0.022 | 0.000 |
| | | | | | | | | | | | |
| VERTICAL CURVE ORDINATE | 0.000 | 0.000 | 0.000 | 0.000 | 0.000 | 0.000 | 0.000 | 0.000 | 0.000 | 0.000 | 0.000 |
| ORDINATE DUE TO SUPERELEVATION | 0.000 | 0.006 | 0.011 | 0.017 | 0.021 | 0.018 | 0.014 | 0.011 | 0.007 | 0.004 | 0.000 |
| | | | | | | | | | | | |
| REQUIRED CAMBER | 0 | 0 | 0 | 0 | 0 | -3/16" | -5/16" | -3/8" | -3/8" | -3/16" | 0 |

* INCLUDES SLAB, BUILDUPS & STAY-IN-PLACE FORMS.
ALL VALUES ARE SHOWN IN FEET (DECIMAL FORM), EXCEPT "FINAL CAMBER" WHICH IS SHOWN IN INCHES (FRACTION FORM).
NEGATIVE DEFLECTIONS ARE UPWARD, NEGATIVE CAMBERS ARE DOWNWARD.

| DEAD LOAD DEFLECTION FOR GIRDERS | | | | | | | | | | | |
|---|---|---|---|---|---|---|---|---|---|---|---|
| | SPAN A | | | | | | | | | | |
| | GIRDER 3 | | | | | | | | | | |
| TENTH POINTS | 0 | .10 | .20 | .30 | .40 | .50 | .60 | .70 | .80 | .90 | 0 |
| DEFLECTION DUE TO WEIGHT OF GIRDER | 0.000 | -0.002 | -0.004 | -0.006 | -0.008 | -0.010 | -0.011 | -0.011 | -0.010 | -0.006 | 0.000 |
| DEFLECTION DUE TO WEIGHT OF SLAB * | 0.000 | -0.001 | -0.003 | -0.007 | -0.012 | -0.017 | -0.021 | -0.023 | -0.021 | -0.014 | 0.000 |
| DEFLECTION DUE TO WEIGHT OF BARRIER RAIL | 0.000 | -0.001 | -0.003 | -0.004 | -0.005 | -0.006 | -0.006 | -0.006 | -0.005 | -0.002 | 0.000 |
| TOTAL DEAD LOAD DEFLECTION | 0.000 | -0.004 | -0.010 | -0.017 | -0.025 | -0.033 | -0.038 | -0.040 | -0.036 | -0.022 | 0.000 |
| | | | | | | | | | | | |
| VERTICAL CURVE ORDINATE | 0.000 | 0.000 | 0.000 | 0.000 | 0.000 | 0.000 | 0.000 | 0.000 | 0.000 | 0.000 | 0.000 |
| ORDINATE DUE TO SUPERELEVATION | 0.000 | -0.006 | -0.011 | -0.017 | -0.021 | -0.018 | -0.014 | -0.011 | -0.007 | -0.004 | 0.000 |
| | | | | | | | | | | | |
| REQUIRED CAMBER | 0 | -1/8" | -1/4" | -7/16" | -9/16" | -5/8" | -5/8" | -5/8" | -1/2" | -5/16" | 0 |

* INCLUDES SLAB, BUILDUPS & STAY-IN-PLACE FORMS.
ALL VALUES ARE SHOWN IN FEET (DECIMAL FORM), EXCEPT "FINAL CAMBER" WHICH IS SHOWN IN INCHES (FRACTION FORM).
NEGATIVE DEFLECTIONS ARE UPWARD, NEGATIVE CAMBERS ARE DOWNWARD.

| DEAD LOAD DEFLECTION FOR GIRDERS | | | | | | | | | | | |
|---|---|---|---|---|---|---|---|---|---|---|---|
| | SPAN A | | | | | | | | | | |
| | GIRDER 4 | | | | | | | | | | |
| TENTH POINTS | 0 | .10 | .20 | .30 | .40 | .50 | .60 | .70 | .80 | .90 | 0 |
| DEFLECTION DUE TO WEIGHT OF GIRDER | 0.000 | -0.002 | -0.004 | -0.006 | -0.008 | -0.010 | -0.011 | -0.011 | -0.010 | -0.006 | 0.000 |
| DEFLECTION DUE TO WEIGHT OF SLAB * | 0.000 | 0.002 | 0.002 | -0.001 | -0.005 | -0.010 | -0.015 | -0.018 | -0.018 | -0.012 | 0.000 |
| DEFLECTION DUE TO WEIGHT OF BARRIER RAIL | 0.000 | -0.001 | -0.003 | -0.003 | -0.005 | -0.006 | -0.007 | -0.008 | -0.006 | -0.004 | 0.000 |
| TOTAL DEAD LOAD DEFLECTION | 0.000 | -0.001 | -0.005 | -0.010 | -0.018 | -0.026 | -0.033 | -0.037 | -0.034 | -0.022 | 0.000 |
| | | | | | | | | | | | |
| VERTICAL CURVE ORDINATE | 0.000 | 0.000 | 0.000 | 0.000 | 0.000 | 0.000 | 0.000 | 0.000 | 0.000 | 0.000 | 0.000 |
| ORDINATE DUE TO SUPERELEVATION | 0.000 | -0.017 | -0.034 | -0.051 | -0.063 | -0.053 | -0.042 | -0.032 | -0.021 | -0.011 | 0.000 |
| | | | | | | | | | | | |
| REQUIRED CAMBER | 0 | -3/16" | -1/2" | -3/4" | -15/16" | -1" | -7/8" | -13/16" | -11/16" | -3/8" | 0 |

* INCLUDES SLAB, BUILDUPS & STAY-IN-PLACE FORMS.
ALL VALUES ARE SHOWN IN FEET (DECIMAL FORM), EXCEPT "FINAL CAMBER" WHICH IS SHOWN IN INCHES (FRACTION FORM).
NEGATIVE DEFLECTIONS ARE UPWARD, NEGATIVE CAMBERS ARE DOWNWARD.

PROJECT NO. B-2848
YANCEY/MITCHELL COUNTY
STATION: 11+97.50 -L-

SHEET 1 OF 5

STATE OF NORTH CAROLINA
DEPARTMENT OF TRANSPORTATION
RALEIGH

# DEAD LOAD DEFLECTION TABLES

NORTH CAROLINA PROFESSIONAL SEAL 22005 ENGINEER A. KEITH PASCHAL
11/29/06

| REVISIONS | | | | | | SHEET NO. |
|---|---|---|---|---|---|---|
| NO. | BY: | DATE: | NO. | BY: | DATE: | S-29 |
| 1 | | | 3 | | | TOTAL SHEETS |
| 2 | | | 4 | | | 91 |

DRAWN BY : A. K. PASCHAL DATE : 27MAY04
CHECKED BY : K. McCAULEY DATE : 6/4/04

31-AUG-2006 12:37
R:\STRUCTØ1\ameadows\FINALPØ1\B2B5D00Ø1.DGN
ameadows

## DEAD LOAD DEFLECTION FOR GIRDERS

SPAN B

GIRDER 1

| TWENTIETH POINTS | 0 | .05 | .10 | .15 | .20 | .25 | .30 | .35 | .40 | .45 | .50 | .55 | .60 | .65 | .70 | .75 | .80 | .85 | .90 | .95 | 0 |
|---|---|---|---|---|---|---|---|---|---|---|---|---|---|---|---|---|---|---|---|---|---|
| DEFLECTION DUE TO WEIGHT OF GIRDER | 0.000 | 0.009 | 0.019 | 0.030 | 0.041 | 0.052 | 0.062 | 0.071 | 0.077 | 0.081 | 0.083 | 0.081 | 0.077 | 0.070 | 0.061 | 0.051 | 0.039 | 0.028 | 0.017 | 0.007 | 0.000 |
| DEFLECTION DUE TO WEIGHT OF SLAB * | 0.000 | 0.019 | 0.043 | 0.069 | 0.097 | 0.123 | 0.148 | 0.170 | 0.186 | 0.196 | 0.199 | 0.195 | 0.184 | 0.167 | 0.146 | 0.120 | 0.092 | 0.064 | 0.038 | 0.016 | 0.000 |
| DEFLECTION DUE TO WEIGHT OF BARRIER RAIL | 0.000 | 0.003 | 0.007 | 0.012 | 0.016 | 0.022 | 0.025 | 0.028 | 0.031 | 0.033 | 0.033 | 0.032 | 0.031 | 0.028 | 0.024 | 0.020 | 0.016 | 0.011 | 0.007 | 0.003 | 0.000 |
| TOTAL DEAD LOAD DEFLECTION | 0.000 | 0.031 | 0.069 | 0.111 | 0.154 | 0.197 | 0.235 | 0.269 | 0.294 | 0.310 | 0.315 | 0.308 | 0.292 | 0.265 | 0.231 | 0.191 | 0.147 | 0.103 | 0.062 | 0.026 | 0.000 |
| | | | | | | | | | | | | | | | | | | | | | |
| VERTICAL CURVE ORDINATE | 0.000 | 0.000 | 0.000 | 0.000 | 0.000 | 0.000 | 0.000 | 0.000 | 0.000 | 0.000 | 0.000 | 0.000 | 0.000 | 0.000 | 0.000 | 0.000 | 0.000 | 0.000 | 0.000 | 0.000 | 0.000 |
| ORDINATE DUE TO SUPERELEVATION | 0.000 | 0.000 | 0.000 | 0.000 | 0.000 | 0.000 | 0.000 | 0.000 | 0.000 | 0.000 | 0.000 | 0.000 | 0.000 | 0.000 | 0.000 | 0.000 | 0.000 | 0.000 | 0.000 | 0.000 | 0.000 |
| | | | | | | | | | | | | | | | | | | | | | |
| REQUIRED CAMBER | 0 | 3/8" | 13/16" | 1 5/16" | 1 7/8" | 2 3/8" | 2 13/16" | 3 1/4" | 3 1/2" | 3 3/4" | 3 3/4" | 3 11/16" | 3 1/2" | 3 3/16" | 2 3/4" | 2 5/16" | 1 3/4" | 1 1/4" | 3/4" | 5/16" | 0 |

* INCLUDES SLAB, BUILDUPS & STAY-IN-PLACE FORMS.
ALL VALUES ARE SHOWN IN FEET (DECIMAL FORM), EXCEPT "FINAL CAMBER" WHICH IS SHOWN IN INCHES (FRACTION FORM).
NEGATIVE DEFLECTIONS ARE UPWARD, NEGATIVE CAMBERS ARE DOWNWARD.

## DEAD LOAD DEFLECTION FOR GIRDERS

SPAN B

GIRDERS 2 & 3

| TWENTIETH POINTS | 0 | .05 | .10 | .15 | .20 | .25 | .30 | .35 | .40 | .45 | .50 | .55 | .60 | .65 | .70 | .75 | .80 | .85 | .90 | .95 | 0 |
|---|---|---|---|---|---|---|---|---|---|---|---|---|---|---|---|---|---|---|---|---|---|
| DEFLECTION DUE TO WEIGHT OF GIRDER | 0.000 | 0.009 | 0.019 | 0.030 | 0.041 | 0.052 | 0.062 | 0.071 | 0.077 | 0.081 | 0.083 | 0.081 | 0.076 | 0.070 | 0.061 | 0.051 | 0.039 | 0.028 | 0.017 | 0.007 | 0.000 |
| DEFLECTION DUE TO WEIGHT OF SLAB * | 0.000 | 0.020 | 0.046 | 0.073 | 0.102 | 0.129 | 0.154 | 0.176 | 0.192 | 0.202 | 0.205 | 0.201 | 0.190 | 0.173 | 0.150 | 0.124 | 0.095 | 0.067 | 0.040 | 0.017 | 0.000 |
| DEFLECTION DUE TO WEIGHT OF BARRIER RAIL | 0.000 | 0.004 | 0.008 | 0.014 | 0.018 | 0.023 | 0.027 | 0.030 | 0.034 | 0.036 | 0.036 | 0.035 | 0.034 | 0.030 | 0.027 | 0.022 | 0.018 | 0.012 | 0.007 | 0.004 | 0.000 |
| TOTAL DEAD LOAD DEFLECTION | 0.000 | 0.033 | 0.073 | 0.117 | 0.161 | 0.204 | 0.243 | 0.277 | 0.303 | 0.319 | 0.324 | 0.317 | 0.300 | 0.273 | 0.238 | 0.197 | 0.152 | 0.107 | 0.064 | 0.028 | 0.000 |
| | | | | | | | | | | | | | | | | | | | | | |
| VERTICAL CURVE ORDINATE | 0.000 | 0.000 | 0.000 | 0.000 | 0.000 | 0.000 | 0.000 | 0.000 | 0.000 | 0.000 | 0.000 | 0.000 | 0.000 | 0.000 | 0.000 | 0.000 | 0.000 | 0.000 | 0.000 | 0.000 | 0.000 |
| ORDINATE DUE TO SUPERELEVATION | 0.000 | 0.000 | 0.000 | 0.000 | 0.000 | 0.000 | 0.000 | 0.000 | 0.000 | 0.000 | 0.000 | 0.000 | 0.000 | 0.000 | 0.000 | 0.000 | 0.000 | 0.000 | 0.000 | 0.000 | 0.000 |
| | | | | | | | | | | | | | | | | | | | | | |
| REQUIRED CAMBER | 0 | 3/8" | 7/8" | 1 7/16" | 1 15/16" | 2 7/16" | 2 15/16" | 3 5/16" | 3 5/8" | 3 13/16" | 3 7/8" | 3 13/16" | 3 5/8" | 3 1/4" | 2 7/8" | 2 3/8" | 1 13/16" | 1 5/16" | 3/4" | 5/16" | 0 |

* INCLUDES SLAB, BUILDUPS & STAY-IN-PLACE FORMS.
ALL VALUES ARE SHOWN IN FEET (DECIMAL FORM), EXCEPT "FINAL CAMBER" WHICH IS SHOWN IN INCHES (FRACTION FORM).
NEGATIVE DEFLECTIONS ARE UPWARD, NEGATIVE CAMBERS ARE DOWNWARD.

## DEAD LOAD DEFLECTION FOR GIRDERS

SPAN B

GIRDER 4

| TWENTIETH POINTS | 0 | .05 | .10 | .15 | .20 | .25 | .30 | .35 | .40 | .45 | .50 | .55 | .60 | .65 | .70 | .75 | .80 | .85 | .90 | .95 | 0 |
|---|---|---|---|---|---|---|---|---|---|---|---|---|---|---|---|---|---|---|---|---|---|
| DEFLECTION DUE TO WEIGHT OF GIRDER | 0.000 | 0.009 | 0.019 | 0.030 | 0.041 | 0.052 | 0.062 | 0.071 | 0.077 | 0.081 | 0.083 | 0.081 | 0.077 | 0.070 | 0.061 | 0.051 | 0.039 | 0.028 | 0.017 | 0.007 | 0.000 |
| DEFLECTION DUE TO WEIGHT OF SLAB * | 0.000 | 0.019 | 0.043 | 0.070 | 0.098 | 0.124 | 0.149 | 0.170 | 0.187 | 0.197 | 0.200 | 0.196 | 0.185 | 0.168 | 0.146 | 0.120 | 0.092 | 0.064 | 0.038 | 0.016 | 0.000 |
| DEFLECTION DUE TO WEIGHT OF BARRIER RAIL | 0.000 | 0.005 | 0.012 | 0.020 | 0.028 | 0.035 | 0.041 | 0.047 | 0.051 | 0.054 | 0.055 | 0.053 | 0.051 | 0.046 | 0.040 | 0.033 | 0.026 | 0.019 | 0.011 | 0.005 | 0.000 |
| TOTAL DEAD LOAD DEFLECTION | 0.000 | 0.033 | 0.074 | 0.120 | 0.167 | 0.211 | 0.253 | 0.288 | 0.315 | 0.332 | 0.338 | 0.330 | 0.313 | 0.284 | 0.247 | 0.204 | 0.157 | 0.111 | 0.066 | 0.028 | 0.000 |
| | | | | | | | | | | | | | | | | | | | | | |
| VERTICAL CURVE ORDINATE | 0.000 | 0.000 | 0.000 | 0.000 | 0.000 | 0.000 | 0.000 | 0.000 | 0.000 | 0.000 | 0.000 | 0.000 | 0.000 | 0.000 | 0.000 | 0.000 | 0.000 | 0.000 | 0.000 | 0.000 | 0.000 |
| ORDINATE DUE TO SUPERELEVATION | 0.000 | 0.000 | 0.000 | 0.000 | 0.000 | 0.000 | 0.000 | 0.000 | 0.000 | 0.000 | 0.000 | 0.000 | 0.000 | 0.000 | 0.000 | 0.000 | 0.000 | 0.000 | 0.000 | 0.000 | 0.000 |
| | | | | | | | | | | | | | | | | | | | | | |
| REQUIRED CAMBER | 0 | 3/8" | 7/8" | 1 7/16" | 2" | 2 1/2" | 3 1/16" | 3 7/16" | 3 3/4" | 4" | 4 1/16" | 3 15/16" | 3 3/4" | 3 7/16" | 2 15/16" | 2 7/16" | 1 7/8" | 1 5/16" | 13/16" | 5/16" | 0 |

* INCLUDES SLAB, BUILDUPS & STAY-IN-PLACE FORMS.
ALL VALUES ARE SHOWN IN FEET (DECIMAL FORM), EXCEPT "FINAL CAMBER" WHICH IS SHOWN IN INCHES (FRACTION FORM).
NEGATIVE DEFLECTIONS ARE UPWARD, NEGATIVE CAMBERS ARE DOWNWARD.

NORTH CAROLINA PROFESSIONAL SEAL 22005 ENGINEER A. KEITH PASCHAL
11/29/06

PROJECT NO. B-2848
YANCEY/MITCHELL COUNTY
STATION: 11+97.50 -L-

SHEET 2 OF 5

STATE OF NORTH CAROLINA
DEPARTMENT OF TRANSPORTATION
RALEIGH

# DEAD LOAD DEFLECTION TABLES

| REVISIONS | | | | | | SHEET NO. |
|---|---|---|---|---|---|---|
| NO. | BY: | DATE: | NO. | BY: | DATE: | S-30 |
| 1 | | | 3 | | | TOTAL SHEETS |
| 2 | | | 4 | | | 91 |

DRAWN BY : A. K. PASCHAL DATE : 27MAY04
CHECKED BY : K. McCAULEY DATE : 6/4/04

31-AUG-2006 12:37
R:\STRUCTØ1\ameadows\FINALPØ1\B2B5D00Ø1.DGN
ameadows

## DEAD LOAD DEFLECTION FOR GIRDERS

SPAN C

GIRDER 1

| TWENTIETH POINTS | 0 | .05 | .10 | .15 | .20 | .25 | .30 | .35 | .40 | .45 | .50 | .55 | .60 | .65 | .70 | .75 | .80 | .85 | .90 | .95 | 0 |
|---|---|---|---|---|---|---|---|---|---|---|---|---|---|---|---|---|---|---|---|---|---|
| DEFLECTION DUE TO WEIGHT OF GIRDER | 0.000 | -0.003 | -0.005 | -0.006 | -0.007 | -0.006 | -0.005 | -0.004 | -0.003 | -0.001 | 0.001 | 0.003 | 0.004 | 0.006 | 0.006 | 0.006 | 0.006 | 0.005 | 0.004 | 0.002 | 0.000 |
| DEFLECTION DUE TO WEIGHT OF SLAB * | 0.000 | -0.006 | -0.009 | -0.009 | -0.007 | -0.004 | 0.001 | 0.007 | 0.013 | 0.019 | 0.025 | 0.030 | 0.033 | 0.035 | 0.036 | 0.034 | 0.030 | 0.025 | 0.018 | 0.009 | 0.000 |
| DEFLECTION DUE TO WEIGHT OF BARRIER RAIL | 0.000 | -0.001 | -0.002 | -0.002 | -0.002 | -0.001 | -0.001 | 0.000 | 0.001 | 0.002 | 0.003 | 0.003 | 0.005 | 0.004 | 0.006 | 0.005 | 0.004 | 0.003 | 0.002 | 0.001 | 0.000 |
| TOTAL DEAD LOAD DEFLECTION | 0.000 | -0.010 | -0.016 | -0.017 | -0.016 | -0.011 | -0.005 | 0.003 | 0.011 | 0.020 | 0.029 | 0.036 | 0.042 | 0.045 | 0.046 | 0.045 | 0.040 | 0.033 | 0.024 | 0.012 | 0.000 |
| | | | | | | | | | | | | | | | | | | | | | |
| VERTICAL CURVE ORDINATE | 0.000 | 0.000 | 0.000 | 0.000 | 0.000 | 0.000 | 0.000 | 0.000 | 0.000 | 0.000 | 0.000 | 0.000 | 0.000 | 0.000 | 0.000 | 0.000 | 0.000 | 0.000 | 0.000 | 0.000 | 0.000 |
| ORDINATE DUE TO SUPERELEVATION | 0.000 | -0.040 | -0.080 | -0.088 | -0.095 | -0.103 | -0.110 | -0.118 | -0.125 | -0.133 | -0.140 | -0.145 | -0.150 | -0.140 | -0.129 | -0.115 | -0.100 | -0.084 | -0.068 | -0.034 | 0.000 |
| | | | | | | | | | | | | | | | | | | | | | |
| REQUIRED CAMBER | 0 | -5/8" | -1 3/16" | -1 5/16" | -1 5/16" | -1 3/8" | -1 3/8" | -1 3/8" | -1 5/16" | -1 5/16" | -1 5/16" | -1 1/4" | -1 1/4" | -1 1/16" | -1 5/16" | -3/4" | -5/8" | -9/16" | -1/2" | -1/4" | 0 |

* INCLUDES SLAB, BUILDUPS & STAY-IN-PLACE FORMS.
ALL VALUES ARE SHOWN IN FEET (DECIMAL FORM), EXCEPT "FINAL CAMBER" WHICH IS SHOWN IN INCHES (FRACTION FORM).
NEGATIVE DEFLECTIONS ARE UPWARD, NEGATIVE CAMBERS ARE DOWNWARD.

## DEAD LOAD DEFLECTION FOR GIRDERS

SPAN C

GIRDER 2

| TWENTIETH POINTS | 0 | .05 | .10 | .15 | .20 | .25 | .30 | .35 | .40 | .45 | .50 | .55 | .60 | .65 | .70 | .75 | .80 | .85 | .90 | .95 | 0 |
|---|---|---|---|---|---|---|---|---|---|---|---|---|---|---|---|---|---|---|---|---|---|
| DEFLECTION DUE TO WEIGHT OF GIRDER | 0.000 | -0.003 | -0.005 | -0.006 | -0.007 | -0.006 | -0.005 | -0.004 | -0.003 | -0.001 | 0.001 | 0.003 | 0.004 | 0.006 | 0.006 | 0.006 | 0.006 | 0.005 | 0.004 | 0.002 | 0.000 |
| DEFLECTION DUE TO WEIGHT OF SLAB * | 0.000 | -0.006 | -0.010 | -0.011 | -0.009 | -0.006 | -0.002 | 0.004 | 0.010 | 0.016 | 0.021 | 0.026 | 0.030 | 0.032 | 0.033 | 0.031 | 0.028 | 0.023 | 0.017 | 0.009 | 0.000 |
| DEFLECTION DUE TO WEIGHT OF BARRIER RAIL | 0.000 | -0.002 | -0.002 | -0.003 | -0.003 | -0.003 | -0.002 | -0.002 | -0.001 | -0.001 | 0.000 | 0.001 | 0.001 | 0.001 | 0.002 | 0.002 | 0.002 | 0.001 | 0.000 | 0.000 | 0.000 |
| TOTAL DEAD LOAD DEFLECTION | 0.000 | -0.011 | -0.017 | -0.020 | -0.019 | -0.015 | -0.009 | -0.002 | 0.006 | 0.014 | 0.022 | 0.030 | 0.035 | 0.039 | 0.040 | 0.039 | 0.036 | 0.029 | 0.021 | 0.011 | 0.000 |
| | | | | | | | | | | | | | | | | | | | | | |
| VERTICAL CURVE ORDINATE | 0.000 | 0.000 | 0.000 | 0.000 | 0.000 | 0.000 | 0.000 | 0.000 | 0.000 | 0.000 | 0.000 | 0.000 | 0.000 | 0.000 | 0.000 | 0.000 | 0.000 | 0.000 | 0.000 | 0.000 | 0.000 |
| ORDINATE DUE TO SUPERELEVATION | 0.000 | -0.026 | -0.052 | -0.068 | -0.083 | -0.098 | -0.113 | -0.129 | -0.144 | -0.159 | -0.174 | -0.187 | -0.199 | -0.196 | -0.192 | -0.175 | -0.157 | -0.127 | -0.096 | -0.048 | 0.000 |
| | | | | | | | | | | | | | | | | | | | | | |
| REQUIRED CAMBER | 0 | -7/16" | -1 3/16" | -1 1/16" | -1 1/4" | -1 3/8" | -1 7/16" | -1 3/16" | -1 5/8" | -1 3/4" | -1 13/16" | -1 7/8" | -1 15/16" | -1 7/8" | -1 13/16" | -1 5/8" | -1 7/16" | -1 3/16" | -7/8" | -7/16" | 0 |

* INCLUDES SLAB, BUILDUPS & STAY-IN-PLACE FORMS.
ALL VALUES ARE SHOWN IN FEET (DECIMAL FORM), EXCEPT "FINAL CAMBER" WHICH IS SHOWN IN INCHES (FRACTION FORM).
NEGATIVE DEFLECTIONS ARE UPWARD, NEGATIVE CAMBERS ARE DOWNWARD.

PROJECT NO. B-2848
YANCEY/MITCHELL COUNTY
STATION: 11+97.50 -L-

SHEET 3 OF 5

NORTH CAROLINA PROFESSIONAL SEAL 22605 ENGINEER A. KEITH PASCHAL
11/29/06

STATE OF NORTH CAROLINA
DEPARTMENT OF TRANSPORTATION
RALEIGH

DEAD LOAD DEFLECTION TABLES

| REVISIONS | | | | | | SHEET NO. |
|---|---|---|---|---|---|---|
| NO. | BY: | DATE: | NO. | BY: | DATE: | S-31 |
| 1 | | | 3 | | | TOTAL SHEETS |
| 2 | | | 4 | | | 91 |

DRAWN BY : A. K. PASCHAL DATE : 27MAY04
CHECKED BY : K. McCAULEY DATE : 6/4/04

31-AUG-2006 12:37
R:\STRUCT01\ameadows\FINALP01\B2B5D001.DGN
ameadows

## DEAD LOAD DEFLECTION FOR GIRDERS

SPAN C

GIRDER 4

| TWENTIETH POINTS | 0 | .05 | .10 | .15 | .20 | .25 | .30 | .35 | .40 | .45 | .50 | .55 | .60 | .65 | .70 | .75 | .80 | .85 | .90 | .95 | 0 |
|---|---|---|---|---|---|---|---|---|---|---|---|---|---|---|---|---|---|---|---|---|---|
| DEFLECTION DUE TO WEIGHT OF GIRDER | 0.000 | -0.003 | -0.005 | -0.006 | -0.007 | -0.006 | -0.005 | -0.004 | -0.003 | 0.000 | 0.001 | 0.003 | 0.004 | 0.005 | 0.006 | 0.006 | 0.006 | 0.005 | 0.004 | 0.002 | 0.000 |
| DEFLECTION DUE TO WEIGHT OF SLAB * | 0.000 | -0.006 | -0.009 | -0.009 | -0.007 | -0.004 | 0.000 | 0.007 | 0.013 | 0.019 | 0.025 | 0.030 | 0.034 | 0.036 | 0.036 | 0.034 | 0.030 | 0.025 | 0.017 | 0.009 | 0.000 |
| DEFLECTION DUE TO WEIGHT OF BARRIER RAIL | 0.000 | -0.002 | -0.003 | -0.004 | -0.003 | -0.003 | -0.002 | 0.000 | 0.000 | 0.001 | 0.002 | 0.003 | 0.004 | 0.005 | 0.005 | 0.005 | 0.004 | 0.003 | 0.003 | 0.001 | 0.000 |
| TOTAL DEAD LOAD DEFLECTION | 0.000 | -0.011 | -0.017 | -0.019 | -0.017 | -0.013 | -0.007 | 0.001 | 0.010 | 0.020 | 0.028 | 0.036 | 0.042 | 0.046 | 0.047 | 0.045 | 0.040 | 0.033 | 0.024 | 0.012 | 0.000 |
| | | | | | | | | | | | | | | | | | | | | | |
| VERTICAL CURVE ORDINATE | 0.000 | 0.000 | 0.000 | 0.000 | 0.000 | 0.000 | 0.000 | 0.000 | 0.000 | 0.000 | 0.000 | 0.000 | 0.000 | 0.000 | 0.000 | 0.000 | 0.000 | 0.000 | 0.000 | 0.000 | 0.000 |
| ORDINATE DUE TO SUPERELEVATION | 0.000 | 0.000 | 0.000 | -0.032 | -0.063 | -0.095 | -0.127 | -0.159 | -0.191 | -0.224 | -0.256 | -0.287 | -0.317 | -0.331 | -0.344 | -0.312 | -0.279 | -0.219 | -0.158 | -0.079 | 0.000 |
| | | | | | | | | | | | | | | | | | | | | | |
| REQUIRED CAMBER | 0 | -1/8" | -3/16" | -5/8" | -15/16" | -15/16" | -15/8" | -17/8" | -23/16" | -27/16" | -23/4" | -3" | -35/16" | -37/16" | -39/16" | -33/16" | -27/8" | -21/4" | -15/8" | -13/16" | 0 |

* INCLUDES SLAB, BUILDUPS & STAY-IN-PLACE FORMS.
ALL VALUES ARE SHOWN IN FEET (DECIMAL FORM), EXCEPT "FINAL CAMBER" WHICH IS SHOWN IN INCHES (FRACTION FORM).
NEGATIVE DEFLECTIONS ARE UPWARD, NEGATIVE CAMBERS ARE DOWNWARD.

## DEAD LOAD DEFLECTION FOR GIRDERS

SPAN C

GIRDER 3

| TWENTIETH POINTS | 0 | .05 | .10 | .15 | .20 | .25 | .30 | .35 | .40 | .45 | .50 | .55 | .60 | .65 | .70 | .75 | .80 | .85 | .90 | .95 | 0 |
|---|---|---|---|---|---|---|---|---|---|---|---|---|---|---|---|---|---|---|---|---|---|
| DEFLECTION DUE TO WEIGHT OF GIRDER | 0.000 | -0.003 | -0.005 | -0.006 | -0.007 | -0.006 | -0.005 | -0.004 | -0.003 | -0.001 | 0.001 | 0.003 | 0.004 | 0.005 | 0.005 | 0.006 | 0.006 | 0.005 | 0.004 | 0.002 | 0.000 |
| DEFLECTION DUE TO WEIGHT OF SLAB * | 0.000 | -0.006 | -0.010 | -0.011 | -0.009 | -0.006 | -0.002 | 0.003 | 0.010 | 0.016 | 0.021 | 0.026 | 0.030 | 0.032 | 0.033 | 0.031 | 0.028 | 0.023 | 0.016 | 0.009 | 0.000 |
| DEFLECTION DUE TO WEIGHT OF BARRIER RAIL | 0.000 | -0.002 | -0.003 | -0.003 | -0.003 | -0.004 | -0.004 | -0.003 | -0.003 | -0.002 | -0.002 | -0.001 | -0.001 | 0.000 | 0.000 | 0.000 | 0.000 | 0.000 | 0.000 | 0.000 | 0.000 |
| TOTAL DEAD LOAD DEFLECTION | 0.000 | -0.011 | -0.018 | -0.020 | -0.019 | -0.016 | -0.011 | -0.004 | 0.004 | 0.013 | 0.020 | 0.028 | 0.033 | 0.037 | 0.038 | 0.037 | 0.034 | 0.028 | 0.020 | 0.011 | 0.000 |
| | | | | | | | | | | | | | | | | | | | | | |
| VERTICAL CURVE ORDINATE | 0.000 | 0.000 | 0.000 | 0.000 | 0.000 | 0.000 | 0.000 | 0.000 | 0.000 | 0.000 | 0.000 | 0.000 | 0.000 | 0.000 | 0.000 | 0.000 | 0.000 | 0.000 | 0.000 | 0.000 | 0.000 |
| ORDINATE DUE TO SUPERELEVATION | 0.000 | -0.013 | -0.025 | -0.049 | -0.072 | -0.096 | -0.119 | -0.142 | -0.165 | -0.189 | -0.212 | -0.234 | -0.255 | -0.259 | -0.263 | -0.240 | -0.217 | -0.172 | -0.127 | -0.064 | 0.000 |
| | | | | | | | | | | | | | | | | | | | | | |
| REQUIRED CAMBER | 0 | -5/16" | -1/2" | -13/16" | -11/16" | -15/16" | -19/16" | -13/4" | -13/4" | -21/8" | -25/16" | -27/16" | -25/8" | -25/8" | -211/16" | -27/16" | -23/16" | -111/16" | -11/4" | -5/8" | 0 |

* INCLUDES SLAB, BUILDUPS & STAY-IN-PLACE FORMS.
ALL VALUES ARE SHOWN IN FEET (DECIMAL FORM), EXCEPT "FINAL CAMBER" WHICH IS SHOWN IN INCHES (FRACTION FORM).
NEGATIVE DEFLECTIONS ARE UPWARD, NEGATIVE CAMBERS ARE DOWNWARD.

PROJECT NO. B-2848

YANCEY/MITCHELL COUNTY

STATION: 11+97.50 -L-

SHEET 4 OF 5

STATE OF NORTH CAROLINA
DEPARTMENT OF TRANSPORTATION
RALEIGH

# DEAD LOAD DEFLECTION TABLES

NORTH CAROLINA PROFESSIONAL SEAL 22005 ENGINEER A. KEITH PASCHAL

11/29/06

| REVISIONS | | | | | | SHEET NO. |
|---|---|---|---|---|---|---|
| NO. | BY: | DATE: | NO. | BY: | DATE: | S-32 |
| 1 | | | 3 | | | TOTAL SHEETS |
| 2 | | | 4 | | | 91 |

DRAWN BY : A. K. PASCHAL DATE : 27MAY04
CHECKED BY : K. McCAULEY DATE : 6/4/04

31-AUG-2006 12:37
R:\STRUCTØ1\ameadows\FINALPØ1\B2B5D00Ø1.DGN
ameadows

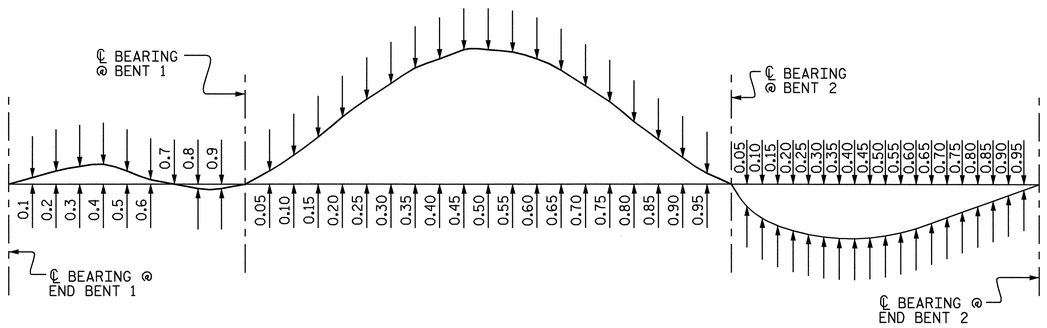


SPAN A SPAN B SPAN C

GIRDER #1

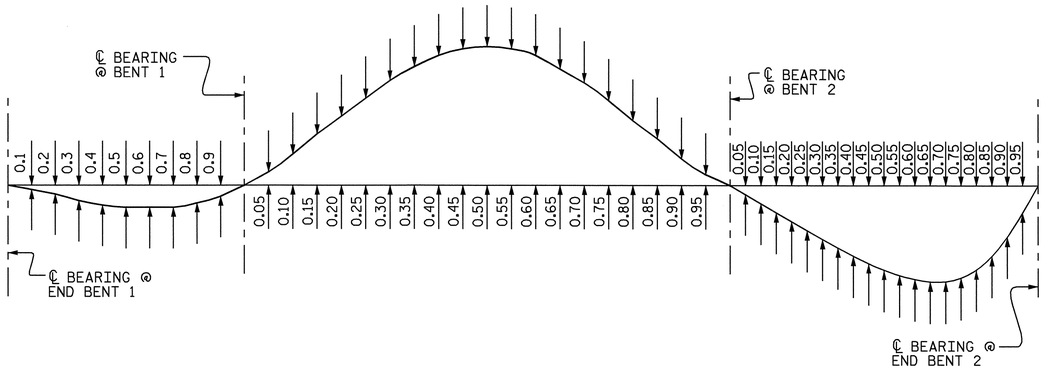


SPAN A SPAN B SPAN C

GIRDER #3

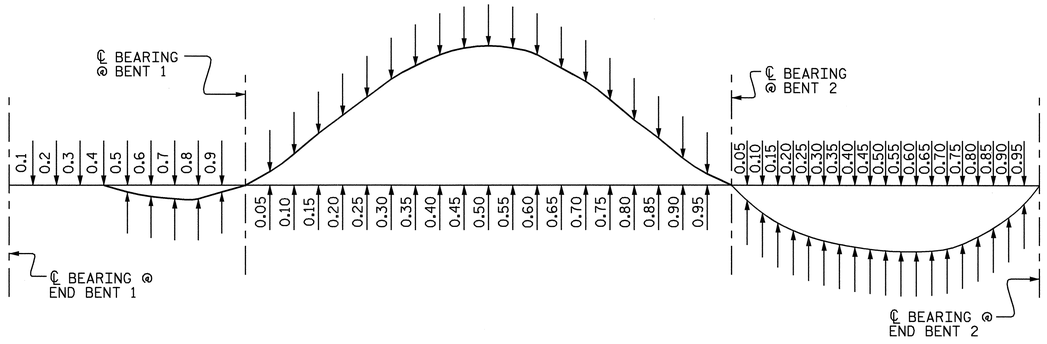


SPAN A SPAN B SPAN C

GIRDER #2

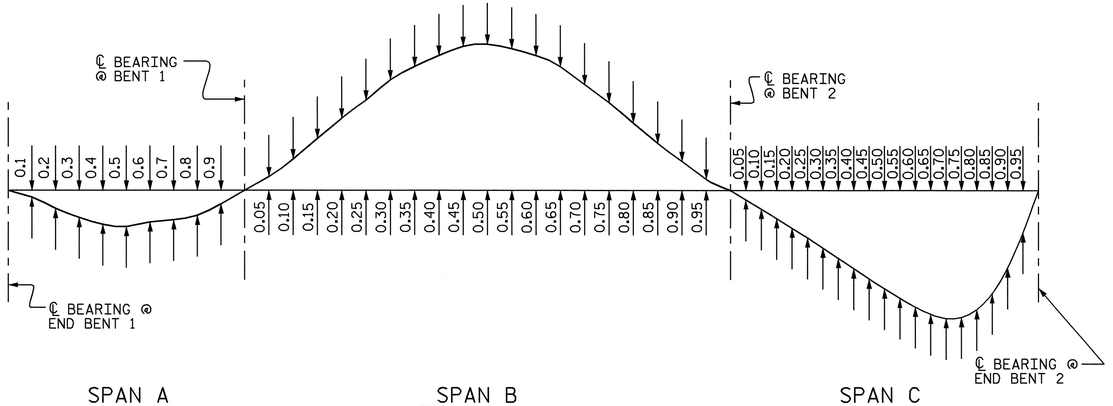


SPAN A SPAN B SPAN C

GIRDER #4

## SCHEMATIC CAMBER ORDINATES

(FOR GIRDERS #1, #2, #3, & #4)
(GIRDERS #1A, #1B, #1C, #1D, #4A, #4B, & #4C HAVE ZERO CAMBER.)
SLOPE FOR THE ZERO CAMBER BASE LINE VARIES.

NORTH CAROLINA PROFESSIONAL SEAL 22005 ENGINEER W. KEITH PASCHAL
11/29/06

PROJECT NO. B-2848
YANCEY/MITCHELL COUNTY
STATION: 11+97.50 -L-

SHEET 5 OF 5

STATE OF NORTH CAROLINA
DEPARTMENT OF TRANSPORTATION
RALEIGH

SUPERSTRUCTURE

DEAD LOAD DEFLECTIONS

| REVISIONS | | | | | | SHEET NO. |
|---|---|---|---|---|---|---|
| NO. | BY: | DATE: | NO. | BY: | DATE: | S-33 |
| 1 | | | 3 | | | TOTAL SHEETS |
| 2 | | | 4 | | | 91 |

DRAWN BY : K. McCAULEY DATE : 10/11/04
CHECKED BY : S. H. SOCKWELL DATE : 10/15/04

31-AUG-2006 12:37
R:\STRUCTØ1\cmeadows\FINALPØ1\B2B5D00Ø1.DGN
cmeadows

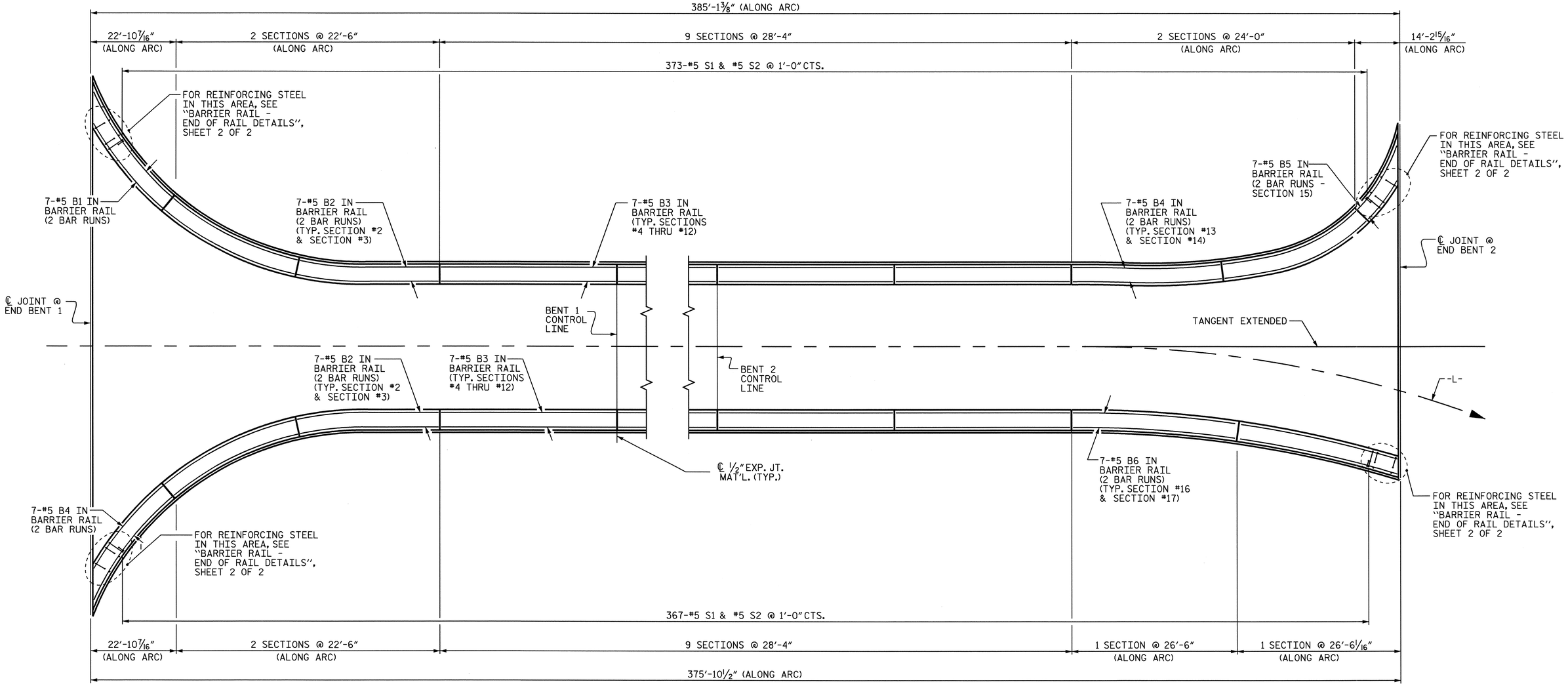


# PLAN OF BARRIER RAIL

ALL DIMENSIONS ARE MEASURED ALONG OUTSIDE FACE OF BARRIER RAIL.

FOR ADDITIONAL NOTES, SEE SHEET 2 OF 2.

PROJECT NO. B-2848

YANCEY/MITCHELL COUNTY

STATION: 11+97.50 -L-

SHEET 1 OF 2

NORTH CAROLINA PROFESSIONAL SEAL 22005 ENGINEER A. KEITH PASCHAL

11/29/06

STATE OF NORTH CAROLINA
DEPARTMENT OF TRANSPORTATION
RALEIGH

SUPERSTRUCTURE
CONCRETE
BARRIER RAIL

| REVISIONS | | | | | | SHEET NO. |
|---|---|---|---|---|---|---|
| NO. | BY: | DATE: | NO. | BY: | DATE: | S-34 |
| 1 | | | 3 | | | TOTAL SHEETS |
| 2 | | | 4 | | | 91 |

DRAWN BY : K. McCAULEY DATE : 4/20/04
CHECKED BY : S. H. SOCKWELL DATE : 10/15/04

31-AUG-2006 12:35
R:\STRUCT01\ameadows\FINALP01\B2B1E601.DGN
ameadows

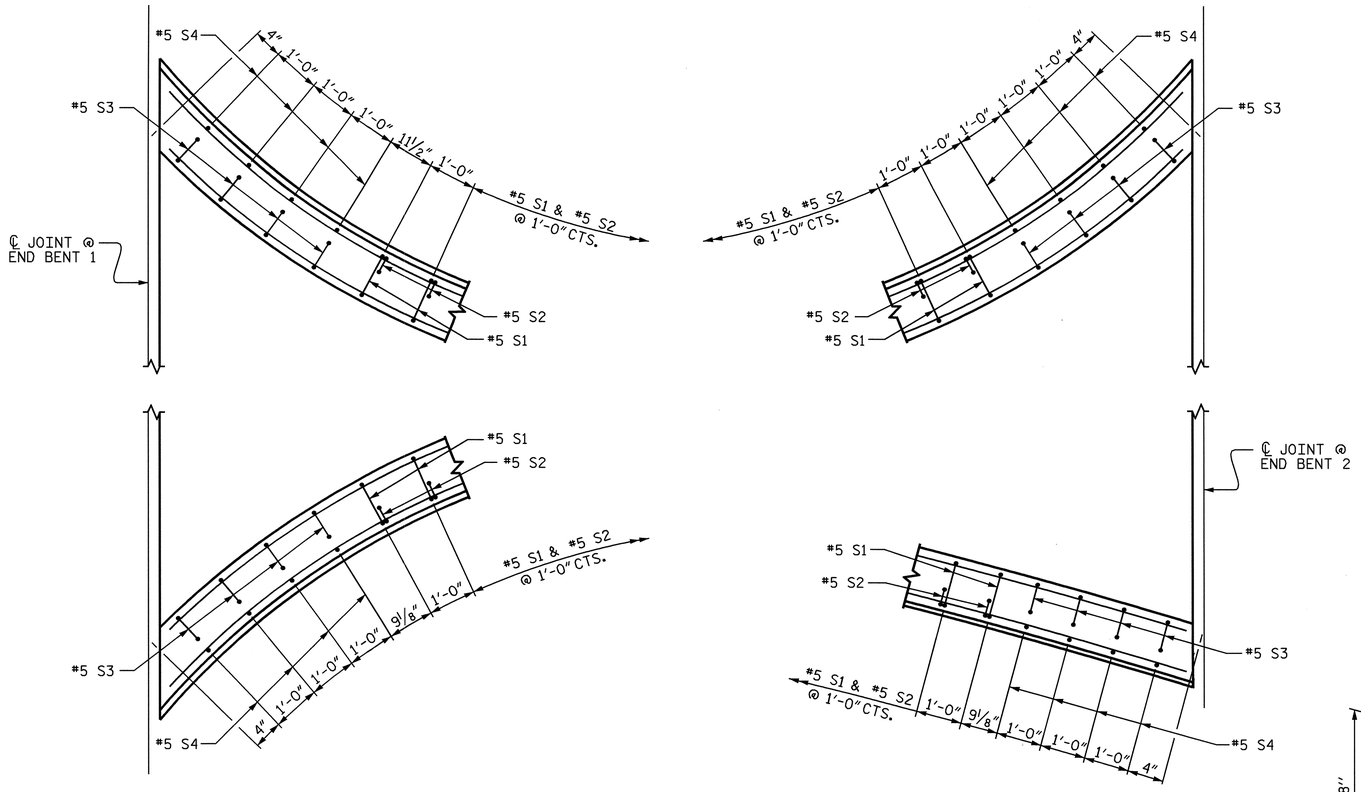


PLAN OF BARRIER RAIL

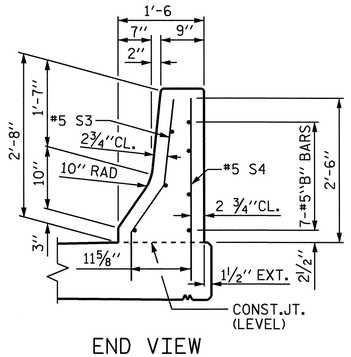


END VIEW

## END OF RAIL DETAILS

FOR ADHESIVE ANCHORING AT SAWED JOINTS

## NOTES

BARRIER RAIL IN A CONTINUOUS UNIT SHALL NOT BE CAST UNTIL ALL SLAB CONCRETE IN THE UNIT HAS BEEN CAST AND HAS REACHED A MINIMUM COMPRESSIVE STRENGTH OF 3,000 PSI.

THE JOINT IN THE DECK SHALL BE SAWED PRIOR TO THE CASTING OF BARRIER RAIL.

ALL REINFORCING STEEL IN BARRIER RAILS SHALL BE EPOXY COATED.

THE #5 S3 AND #5 S4 BARS SHALL BE INSTALLED, USING AN ADHESIVE ANCHORING SYSTEM, AFTER SAWING THE JOINT. THE YIELD LOAD FOR THE #5 S3 AND #5 S4 BARS IS 18.6 KIPS. FIELD TESTING FOR THE ADHESIVE BONDING SYSTEM IS NOT REQUIRED.

VERTICAL GROOVED CONTRACTION JOINTS, ½" IN DEPTH, SHALL BE TOOLED IN ALL EXPOSED FACES OF THE BARRIER RAIL AND IN ACCORDANCE WITH ARTICLE 825-10(B) OF THE STANDARD SPECIFICATIONS. THE CONTRACTION JOINT SHALL BE LOCATED AT EACH THIRD POINT BETWEEN BARRIER RAIL EXPANSION JOINTS. ONLY ONE CONTRACTION JOINT IS REQUIRED AT MIDPOINT OF BARRIER RAIL SEGMENTS LESS THAN 20 FEET IN LENGTH AND NO CONTRACTION JOINTS ARE REQUIRED FOR THOSE SEGMENTS LESS THAN 10 FEET IN LENGTH.

#5 "S" BARS MAY BE SHIFTED SLIGHTLY IN ORDER TO MAINTAIN A 2" MINIMUM CLEARANCE TO THE ½" EXPANSION JOINT MATERIAL IN BARRIER RAIL.

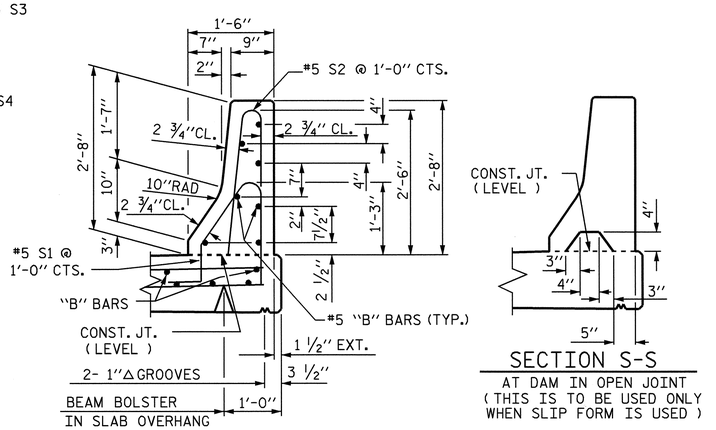


SECTION THRU RAIL




SECTION S-S

AT DAM IN OPEN JOINT ( THIS IS TO BE USED ONLY WHEN SLIP FORM IS USED )

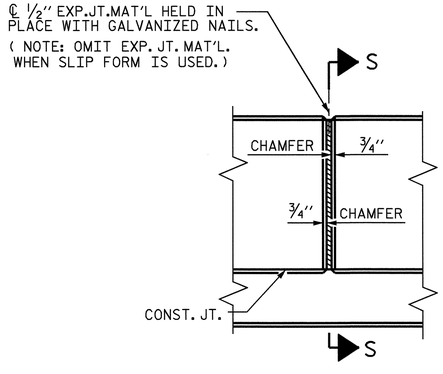


ELEVATION AT EXPANSION JOINTS

## BARRIER RAIL DETAILS

## BAR TYPES

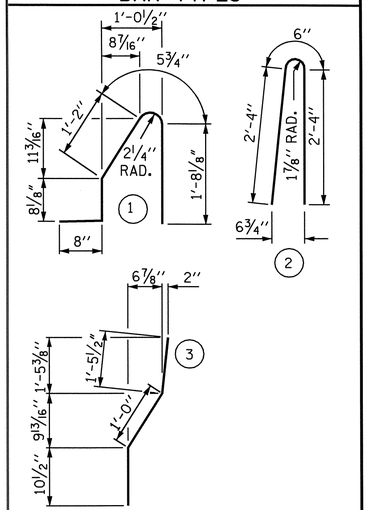


ALL BAR DIMENSIONS ARE OUT TO OUT

## BILL OF MATERIAL

FOR CONCRETE BARRIER RAIL ONLY

| BAR | NO. | SIZE | TYPE | LENGTH | WEIGHT |
|---|---|---|---|---|---|
| ✳ B1 | 28 | #5 | STR | 12'-11" | 377 |
| ✳ B2 | 56 | #5 | STR | 12'-9" | 745 |
| ✳ B3 | 126 | #5 | STR | 27'-11" | 3369 |
| ✳ B4 | 28 | #5 | STR | 13'-6" | 394 |
| ✳ B5 | 14 | #5 | STR | 8'-8" | 126 |
| ✳ B6 | 28 | #5 | STR | 14'-9" | 431 |
| ✳ S1 | 740 | #5 | 1 | 4'-8" | 3602 |
| ✳ S2 | 740 | #5 | 2 | 5'-2" | 3988 |
| ✳ S3 | 16 | #5 | 3 | 3'-4" | 56 |
| ✳ S4 | 16 | #5 | STR | 3'-2" | 53 |

| | |
|---|---|
| ✳ EPOXY COATED REINFORCING STEEL | 13141 LBS. |
| CLASS AA CONCRETE | 76.1 CU. YDS. |
| CONCRETE BARRIER RAIL | 760.98 LIN. FT. |

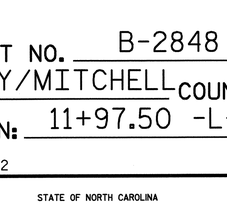


PROJECT NO. B-2848

YANCEY/MITCHELL COUNTY

STATION: 11+97.50 -L-

SHEET 2 OF 2

STATE OF NORTH CAROLINA
DEPARTMENT OF TRANSPORTATION
RALEIGH

# CONCRETE BARRIER RAIL

OCTOBER 1987

| REVISIONS | | | | | | SHEET NO. |
|---|---|---|---|---|---|---|
| NO. | BY: | DATE: | NO. | BY: | DATE: | S-35 |
| 1 | | | 3 | | | TOTAL SHEETS |
| 2 | | | 4 | | | 91 |

STD. NO. CBRI

| | | |
|---|---|---|
| ASSEMBLED BY : K. McCAULEY | DATE : 4/20/04 | |
| CHECKED BY : S. H. SOCKWELL | DATE : 10/15/04 | |
| DRAWN BY : ARB 5/87 | REV. 8/16/99 | RWW/LES |
| CHECKED BY : SJD 9/87 | REV. 10/17/00 | RWW/LES |
| | REV. 5/7/03R | RWW/JTE |

31-AUG-2006 12:35
R:\STRUCTØ1\ameadows\FINALPØ1\B2B1E6Ø1.DGN
ameadows

## REINFORCING BAR SCHEDULE

| BAR | NO | SIZE | TYPE | LENGTH | WEIGHT | BAR | NO | SIZE | TYPE | LENGTH | WEIGHT | BAR | NO | SIZE | TYPE | LENGTH | WEIGHT | BAR | NO | SIZE | TYPE | LENGTH | WEIGHT | BAR | NO | SIZE | TYPE | LENGTH | WEIGHT |
|---|---|---|---|---|---|---|---|---|---|---|---|---|---|---|---|---|---|---|---|---|---|---|---|---|---|---|---|---|---|
| ✳A1 | 451 | 5 | STR | 26-11 | 12661 | A210 | 4 | 5 | STR | 24-10 | 104 | B23 | 2 | 5 | STR | 7-6 | 16 | ✳B72 | 2 | 6 | STR | 27-9 | 83 | ✳B121 | 1 | 4 | STR | 2-7 | 2 |
| A2 | 451 | 5 | STR | 26-11 | 12661 | A211 | 4 | 5 | STR | 25-11 | 108 | B24 | 2 | 5 | STR | 6-10 | 14 | ✳B73 | 2 | 6 | STR | 25-11 | 78 | ✳B122 | 4 | 4 | STR | 1-10 | 5 |
| | | | | | | A212 | 4 | 5 | STR | 27-0 | 113 | B25 | 2 | 5 | STR | 6-3 | 13 | ✳B74 | 2 | 6 | STR | 24-4 | 73 | ✳B123 | 1 | 4 | STR | 29-7 | 20 |
| ✳A101 | 32 | 5 | STR | 16-2 | 540 | A213 | 4 | 5 | STR | 28-3 | 118 | B26 | 2 | 5 | STR | 5-8 | 12 | ✳B75 | 2 | 6 | STR | 22-10 | 69 | ✳B124 | 1 | 4 | STR | 20-6 | 14 |
| ✳A102 | 24 | 5 | STR | 18-10 | 471 | A214 | 4 | 5 | STR | 29-7 | 123 | B27 | 2 | 5 | STR | 5-2 | 11 | ✳B76 | 2 | 6 | STR | 21-6 | 65 | ✳B125 | 1 | 4 | STR | 13-8 | 9 |
| ✳A103 | 4 | 5 | STR | 19-5 | 81 | A215 | 4 | 5 | STR | 31-0 | 129 | B28 | 2 | 5 | STR | 4-7 | 10 | ✳B77 | 2 | 6 | STR | 20-4 | 61 | ✳B126 | 1 | 4 | STR | 7-11 | 5 |
| ✳A104 | 4 | 5 | STR | 20-1 | 84 | A216 | 4 | 5 | STR | 32-6 | 136 | B29 | 2 | 5 | STR | 4-1 | 9 | ✳B78 | 2 | 6 | STR | 19-2 | 58 | ✳B127 | 1 | 4 | STR | 3-0 | 2 |
| ✳A105 | 4 | 5 | STR | 20-9 | 87 | A217 | 4 | 5 | STR | 34-2 | 143 | B30 | 2 | 5 | STR | 3-8 | 8 | ✳B79 | 2 | 6 | STR | 18-1 | 54 | | | | | | |
| ✳A106 | 4 | 5 | STR | 21-6 | 90 | A218 | 4 | 5 | STR | 36-1 | 151 | B31 | 2 | 5 | STR | 3-2 | 7 | ✳B80 | 2 | 6 | STR | 17-0 | 51 | ✳G1 | 2 | 5 | STR | 43-5 | 91 |
| ✳A107 | 4 | 5 | STR | 22-4 | 93 | A219 | 4 | 5 | STR | 38-2 | 159 | B32 | 2 | 5 | STR | 2-9 | 6 | ✳B81 | 2 | 6 | STR | 16-1 | 48 | ✳G2 | 2 | 5 | STR | 28-10 | 60 |
| ✳A108 | 4 | 5 | STR | 23-2 | 97 | A220 | 4 | 5 | STR | 40-6 | 169 | B33 | 2 | 5 | STR | 2-4 | 5 | ✳B82 | 2 | 6 | STR | 15-2 | 46 | | | | | | |
| ✳A109 | 4 | 5 | STR | 24-1 | 100 | A221 | 4 | 5 | STR | 43-3 | 180 | B34 | 2 | 5 | STR | 1-11 | 4 | ✳B83 | 2 | 6 | STR | 14-3 | 43 | ✳K1 | 2 | 5 | 1 | 11-2 | 23 |
| ✳A110 | 4 | 5 | STR | 25-0 | 104 | A222 | 4 | 5 | STR | 15-11 | 797 | B35 | 10 | 5 | STR | 1-6 | 16 | ✳B84 | 2 | 6 | STR | 13-5 | 40 | ✳K2 | 2 | 5 | 1 | 10-3 | 21 |
| ✳A111 | 4 | 5 | STR | 26-1 | 109 | A223 | 48 | 5 | STR | 17-8 | 516 | B36 | 1 | 5 | STR | 26-11 | 28 | ✳B85 | 2 | 6 | STR | 12-8 | 38 | ✳K3 | 2 | 5 | 1 | 9-7 | 20 |
| ✳A112 | 4 | 5 | STR | 27-2 | 113 | A224 | 28 | 5 | STR | 18-1 | 75 | B37 | 1 | 5 | STR | 22-2 | 23 | ✳B86 | 2 | 6 | STR | 11-11 | 36 | ✳K5 | 12 | 5 | STR | 5-10 | 73 |
| ✳A113 | 4 | 5 | STR | 28-5 | 119 | A225 | 4 | 5 | STR | 18-6 | 77 | B38 | 1 | 5 | STR | 18-7 | 19 | ✳B87 | 2 | 6 | STR | 11-2 | 34 | ✳K6 | 12 | 5 | STR | 6-7 | 82 |
| ✳A114 | 4 | 5 | STR | 29-9 | 124 | A226 | 4 | 5 | STR | 19-0 | 79 | B39 | 1 | 5 | STR | 16-4 | 17 | ✳B88 | 2 | 6 | STR | 10-5 | 31 | ✳K7 | 16 | 5 | 2 | 8-0 | 134 |
| ✳A115 | 4 | 5 | STR | 31-2 | 130 | A227 | 4 | 5 | STR | 19-6 | 81 | B40 | 1 | 5 | STR | 14-6 | 15 | ✳B89 | 2 | 6 | STR | 9-9 | 29 | ✳K8 | 12 | 5 | STR | 8-5 | 105 |
| ✳A116 | 4 | 5 | STR | 32-8 | 136 | A228 | 4 | 5 | STR | 20-1 | 84 | B41 | 1 | 5 | STR | 13-0 | 14 | ✳B90 | 2 | 6 | STR | 9-2 | 28 | ✳K9 | 9 | 5 | 2 | 7-10 | 74 |
| ✳A117 | 4 | 5 | STR | 34-4 | 143 | A229 | 4 | 5 | STR | 20-9 | 87 | B42 | 1 | 5 | STR | 11-8 | 12 | ✳B91 | 2 | 6 | STR | 8-6 | 26 | ✳K10 | 3 | 5 | 1 | 7-3 | 23 |
| ✳A118 | 4 | 5 | STR | 36-3 | 151 | A230 | 4 | 5 | STR | 21-5 | 89 | B43 | 1 | 5 | STR | 10-6 | 11 | ✳B92 | 2 | 6 | STR | 7-11 | 24 | ✳K11 | 6 | 5 | STR | 4-6 | 28 |
| ✳A119 | 4 | 5 | STR | 38-4 | 160 | A231 | 4 | 5 | STR | 22-3 | 93 | B44 | 1 | 5 | STR | 9-6 | 10 | ✳B93 | 2 | 6 | STR | 7-4 | 22 | ✳K12 | 12 | 5 | STR | 5-1 | 64 |
| ✳A120 | 4 | 5 | STR | 40-8 | 170 | A232 | 4 | 5 | STR | 23-1 | 96 | B45 | 1 | 5 | STR | 8-7 | 9 | ✳B94 | 2 | 6 | STR | 6-10 | 21 | ✳K13 | 1 | 5 | 1 | 9-0 | 9 |
| ✳A121 | 4 | 5 | STR | 43-5 | 181 | A233 | 4 | 5 | STR | 24-2 | 101 | B46 | 1 | 5 | STR | 7-8 | 8 | ✳B95 | 2 | 6 | STR | 6-3 | 19 | ✳K14 | 1 | 5 | 1 | 10-0 | 10 |
| ✳A122 | 48 | 5 | STR | 16-1 | 805 | A234 | 4 | 5 | STR | 25-4 | 106 | B47 | 1 | 5 | STR | 6-11 | 7 | ✳B96 | 2 | 6 | STR | 5-9 | 17 | ✳K15 | 1 | 5 | 1 | 11-6 | 12 |
| ✳A123 | 28 | 5 | STR | 17-10 | 521 | A235 | 4 | 5 | STR | 26-10 | 112 | B48 | 1 | 5 | STR | 6-2 | 6 | ✳B97 | 2 | 6 | STR | 5-3 | 16 | | | | | | |
| ✳A124 | 4 | 5 | STR | 18-3 | 76 | A236 | 4 | 5 | STR | 28-8 | 120 | B49 | 1 | 5 | STR | 5-6 | 6 | ✳B98 | 2 | 6 | STR | 4-9 | 14 | ✳S1 | 36 | 4 | 3 | 3-11 | 94 |
| ✳A125 | 4 | 5 | STR | 18-8 | 78 | | | | | | | B50 | 1 | 5 | STR | 4-11 | 5 | ✳B99 | 2 | 6 | STR | 4-4 | 13 | ✳S2 | 53 | 4 | 3 | 4-6 | 159 |
| ✳A126 | 4 | 5 | STR | 19-2 | 80 | B1 | 224 | 5 | STR | 53-8 | 12538 | B51 | 1 | 5 | STR | 4-4 | 5 | | | | | | | ✳S3 | 3 | 4 | 3 | 5-2 | 10 |
| ✳A127 | 4 | 5 | STR | 19-8 | 82 | B2 | 2 | 5 | STR | 35-3 | 74 | B52 | 1 | 5 | STR | 3-9 | 4 | ✳B100 | 2 | 6 | STR | 3-11 | 12 | | | | | | |
| ✳A128 | 4 | 5 | STR | 20-3 | 84 | B3 | 2 | 5 | STR | 31-8 | 66 | B53 | 1 | 5 | STR | 3-3 | 3 | ✳B101 | 2 | 6 | STR | 3-6 | 11 | | | | | | |
| ✳A129 | 4 | 5 | STR | 20-11 | 87 | B4 | 2 | 5 | STR | 29-0 | 60 | B54 | 1 | 5 | STR | 2-10 | 3 | ✳B102 | 2 | 6 | STR | 3-1 | 9 | | | | | | |
| ✳A130 | 4 | 5 | STR | 21-7 | 90 | B5 | 2 | 5 | STR | 26-10 | 56 | B55 | 1 | 5 | STR | 2-4 | 2 | ✳B103 | 2 | 6 | STR | 2-8 | 8 | | | | | | |
| ✳A131 | 4 | 5 | STR | 22-5 | 94 | B6 | 2 | 5 | STR | 24-11 | 52 | B56 | 1 | 5 | STR | 2-0 | 2 | ✳B104 | 2 | 6 | STR | 2-3 | 7 | | | | | | |
| ✳A132 | 4 | 5 | STR | 23-3 | 97 | B7 | 2 | 5 | STR | 23-3 | 48 | B57 | 6 | 5 | STR | 1-7 | 10 | ✳B105 | 2 | 6 | STR | 1-11 | 6 | REINFORCING STEEL = 32,274 LBS | | | | | |
| ✳A133 | 4 | 5 | STR | 24-4 | 102 | B8 | 2 | 5 | STR | 21-8 | 45 | B58 | 1 | 5 | STR | 35-3 | 37 | ✳B106 | 12 | 6 | STR | 1-7 | 29 | | | | | | |
| ✳A134 | 4 | 5 | STR | 25-6 | 106 | B9 | 2 | 5 | STR | 20-3 | 42 | B59 | 1 | 5 | STR | 28-3 | 29 | ✳B107 | 63 | 4 | STR | 30-0 | 1263 | ✳EPOXY COATED | | | | | |
| ✳A135 | 4 | 5 | STR | 27-0 | 113 | B10 | 2 | 5 | STR | 19-0 | 40 | B60 | 1 | 5 | STR | 23-0 | 24 | ✳B108 | 63 | 6 | STR | 42-4 | 4006 | REINFORCING STEEL = 38,302 LBS | | | | | |
| ✳A136 | 4 | 5 | STR | 28-10 | 120 | B11 | 2 | 5 | STR | 17-9 | 37 | B61 | 1 | 5 | STR | 18-7 | 19 | ✳B109 | 40 | 6 | STR | 57-0 | 3425 | | | | | | |
| | | | | | | B12 | 2 | 5 | STR | 16-8 | 35 | B62 | 1 | 5 | STR | 14-10 | 15 | ✳B110 | 42 | 4 | STR | 19-11 | 559 | | | | | | |
| A201 | 32 | 5 | STR | 16-0 | 534 | B13 | 2 | 5 | STR | 15-7 | 33 | B67 | 1 | 5 | STR | 11-5 | 12 | ✳B111 | 1 | 4 | STR | 23-1 | 15 | | | | | | |
| A202 | 24 | 5 | STR | 18-8 | 467 | B14 | 2 | 5 | STR | 14-7 | 30 | B64 | 1 | 5 | STR | 8-3 | 9 | ✳B112 | 1 | 4 | STR | 17-3 | 12 | | | | | | |
| A203 | 4 | 5 | STR | 19-3 | 80 | B15 | 2 | 5 | STR | 13-8 | 29 | B65 | 1 | 5 | STR | 5-4 | 6 | ✳B113 | 1 | 4 | STR | 14-0 | 9 | | | | | | |
| A204 | 4 | 5 | STR | 19-11 | 83 | B16 | 2 | 5 | STR | 12-9 | 27 | B66 | 1 | 5 | STR | 2-8 | 3 | ✳B114 | 1 | 4 | STR | 11-7 | 8 | | | | | | |
| A205 | 4 | 5 | STR | 20-7 | 86 | B17 | 2 | 5 | STR | 11-11 | 25 | | | | | | | ✳B115 | 1 | 4 | STR | 9-7 | 6 | | | | | | |
| A206 | 4 | 5 | STR | 21-4 | 89 | B18 | 2 | 5 | STR | 11-1 | 23 | ✳B67 | 60 | 6 | STR | 41-7 | 3747 | ✳B116 | 1 | 4 | STR | 8-0 | 5 | | | | | | |
| A207 | 4 | 5 | STR | 22-2 | 92 | B19 | 2 | 5 | STR | 10-3 | 21 | ✳B68 | 63 | 6 | STR | 43-3 | 4093 | ✳B117 | 1 | 4 | STR | 6-7 | 4 | | | | | | |
| A208 | 4 | 5 | STR | 23-0 | 96 | B20 | 2 | 5 | STR | 9-6 | 20 | ✳B69 | 2 | 6 | STR | 35-9 | 107 | ✳B118 | 1 | 4 | STR | 5-4 | 4 | | | | | | |
| A209 | 4 | 5 | STR | 23-11 | 100 | B21 | 2 | 5 | STR | 8-10 | 18 | ✳B70 | 2 | 6 | STR | 32-4 | 97 | ✳B119 | 1 | 4 | STR | 4-4 | 3 | | | | | | |
| | | | | | | B22 | 2 | 5 | STR | 8-2 | 17 | ✳B71 | 2 | 6 | STR | 29-10 | 90 | ✳B120 | 1 | 4 | STR | 3-4 | 2 | | | | | | |

## BAR TYPES

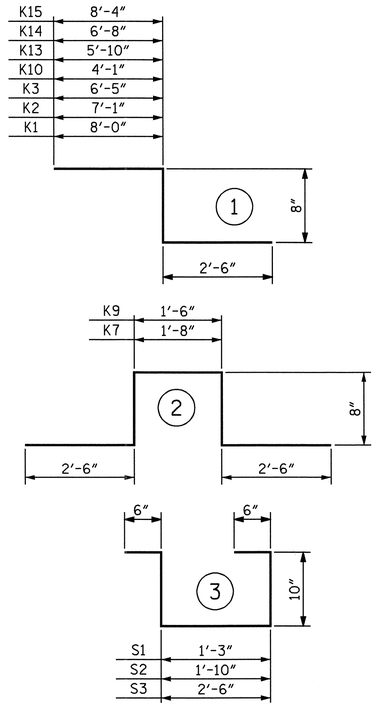


ALL BAR DIMENSIONS ARE OUT TO OUT

## SUPERSTRUCTURE BILL OF MATERIAL

| | CLASS AA CONCRETE | REINFORCING STEEL | EPOXY COATED REINFORCING STEEL |
|---|---|---|---|
| | ( CU. YARD) | (LB) | (LB) |
| TOTALS ✳✳ | 324.6 | 32,274 | 38,302 |

✳✳ QUANTITIES FOR BARRIER RAIL ARE NOT INCLUDED

## SUPERSTRUCTURE REINFORCING STEEL LENGTHS ARE BASED ON THE FOLLOWING MINIMUM SPLICE LENGTHS

| BAR SIZE | SUPERSTRUCTURE EXCEPT APPROACH SLABS, PARAPET, AND BARRIER RAIL | | APPROACH SLABS | | PARAPET AND BARRIER RAIL |
|---|---|---|---|---|---|
| | EPOXY COATED | UNCOATED | EPOXY COATED | UNCOATED | |
| #4 | 2′-0″ | 1′-9″ | 2′-0″ | 1′-9″ | 2′-9″ |
| #5 | 2′-6″ | 2′-2″ | 2′-6″ | 2′-2″ | 3′-5″ |
| #6 | 3′-0″ | 2′-7″ | 3′-10″ | 2′-7″ | 4′-4″ |
| #7 | 5′-3″ | 3′-6″ | | | |
| #8 | 6′-10″ | 4′-7″ | | | |

PROJECT NO. B-2848

YANCEY/MITCHELL COUNTY

STATION: 11+97.50 -L-

SHEET 1 OF 2

STATE OF NORTH CAROLINA
DEPARTMENT OF TRANSPORTATION
RALEIGH

SUPERSTRUCTURE
BILL OF MATERIAL

NORTH CAROLINA PROFESSIONAL SEAL 22005 ENGINEER M. KEITH PASCHAL
11/29/06

| REVISIONS | | | | | | SHEET NO. |
|---|---|---|---|---|---|---|
| NO. | BY: | DATE: | NO. | BY: | DATE: | S-36 |
| 1 | | | 3 | | | TOTAL SHEETS |
| 2 | | | 4 | | | 91 |

DRAWN BY : K. McCAULEY DATE : 5/7/04
CHECKED BY : S. H. SOCKWELL DATE : 10/15/04

31-AUG-2006 12:34
R:\STRUCT@1\ameadows\FINALP@1\B2848_@4.DGN
ameadows

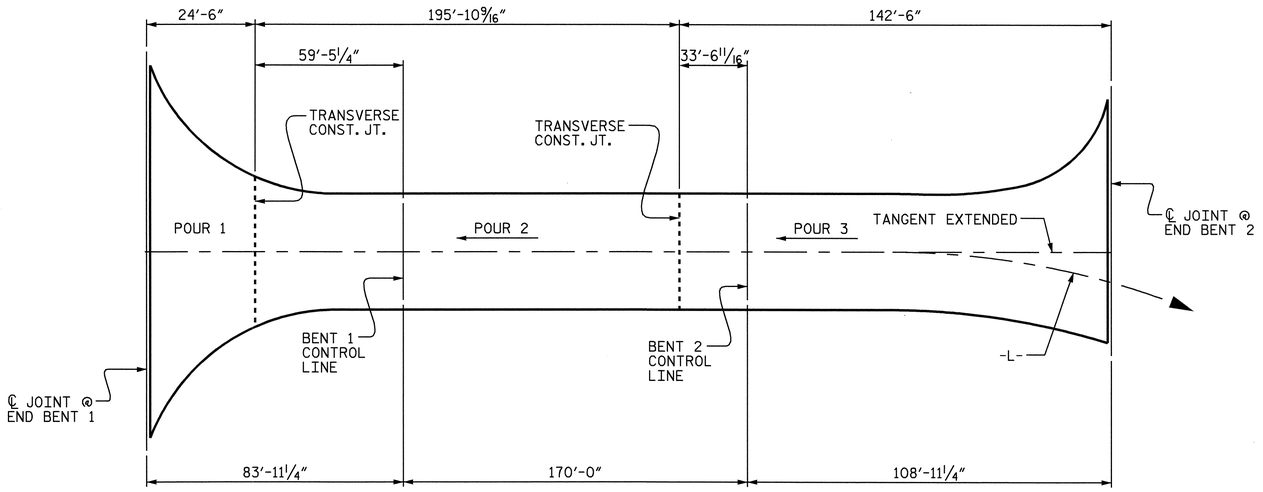


## CONCRETE DECK POUR DETAIL

SEE TRANSVERSE CONSTRUCTION JOINT DETAIL

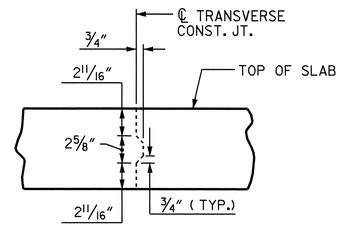


## TRANSVERSE CONSTRUCTION JOINT DETAIL

NOTE: REINFORCING STEEL IN SLAB NOT SHOWN. LONGITUDINAL REINFORCING STEEL SHALL BE CONTINUOUS THRU JOINT

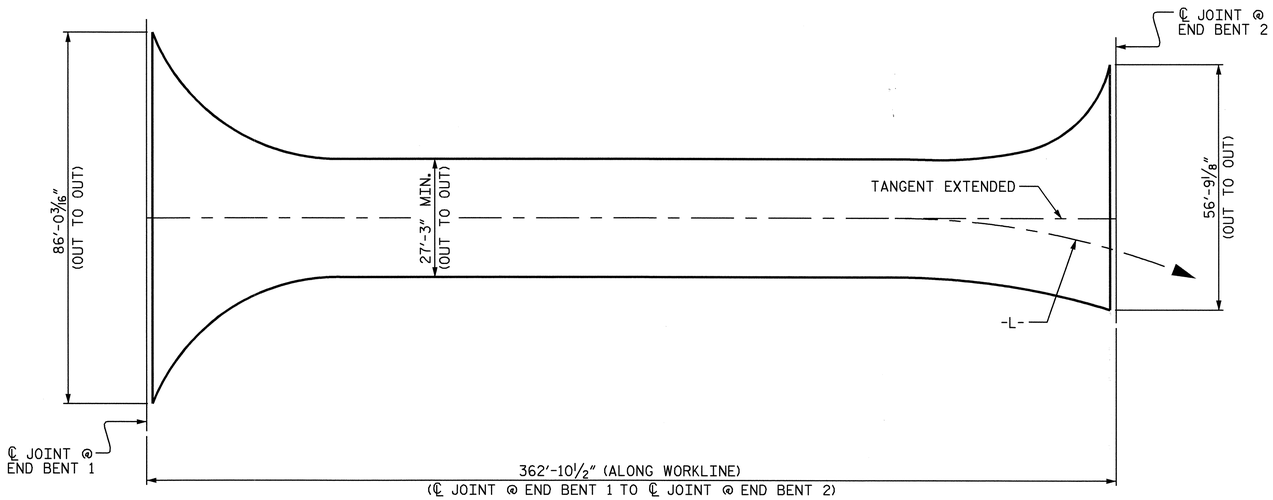


## LAYOUT FOR COMPUTING AREA OF REINFORCED CONCRETE DECK SLAB

( SQ. FEET = 10,872 )

| CLASS AA CONCRETE BREAKDOWN | |
|---|---|
| | (cu. yds.) |
| | |
| POUR #1 | 42.2 |
| POUR #2 | 158.0 |
| POUR #3 | 124.4 |
| | |
| TOTAL | 324.6 |
| | |

| GROOVING BRIDGE FLOORS | |
|---|---|
| APPROACH SLAB | (NOT REQ'D) |
| BRIDGE DECK | 8494 ft$^2$ |
| TOTAL | 8494 ft$^2$ |

PROJECT NO. B-2848

YANCEY/MITCHELL COUNTY

STATION: 11+97.50 -L-

SHEET 2 OF 2

STATE OF NORTH CAROLINA
DEPARTMENT OF TRANSPORTATION
RALEIGH

SUPERSTRUCTURE
BILL OF MATERIAL

NORTH CAROLINA PROFESSIONAL SEAL 22005 ENGINEER KEITH PASCHAL

11-9-06

| REVISIONS | | | | | | SHEET NO. |
|---|---|---|---|---|---|---|
| NO. | BY: | DATE: | NO. | BY: | DATE: | S-37 |
| 1 | | | 3 | | | TOTAL SHEETS |
| 2 | | | 4 | | | 91 |

DRAWN BY : K. McCAULEY DATE : 5/7/04
CHECKED BY : S. H. SOCKWELL DATE : 10/15/04

31-AUG-2006 12:34
R:\STRUCT@1\ameadows\FINALP@1\B2848_@4.DGN
ameadows

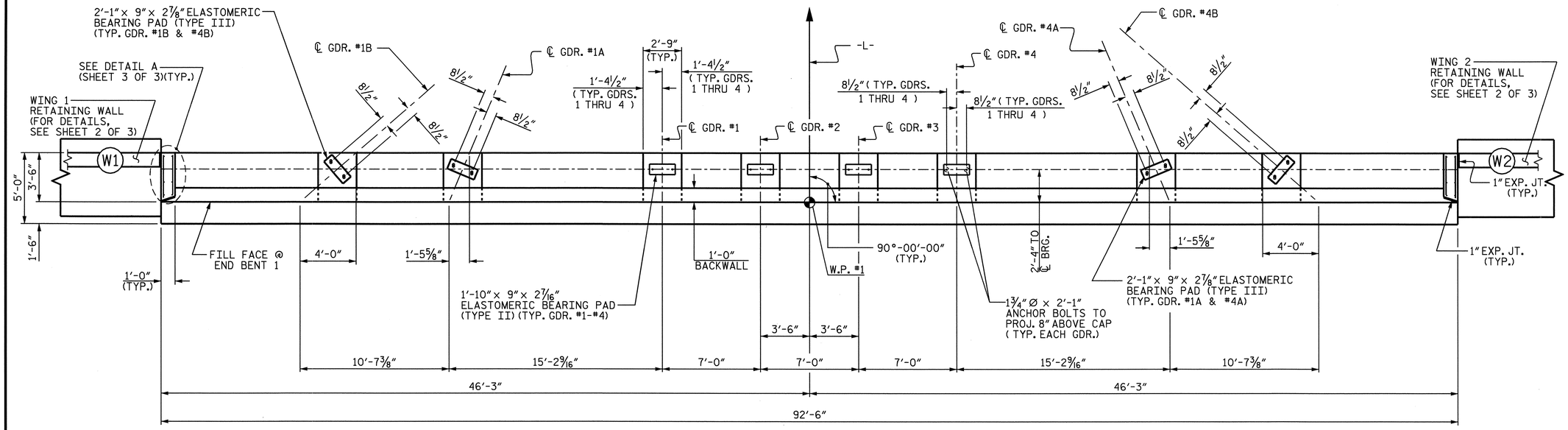


## PLAN

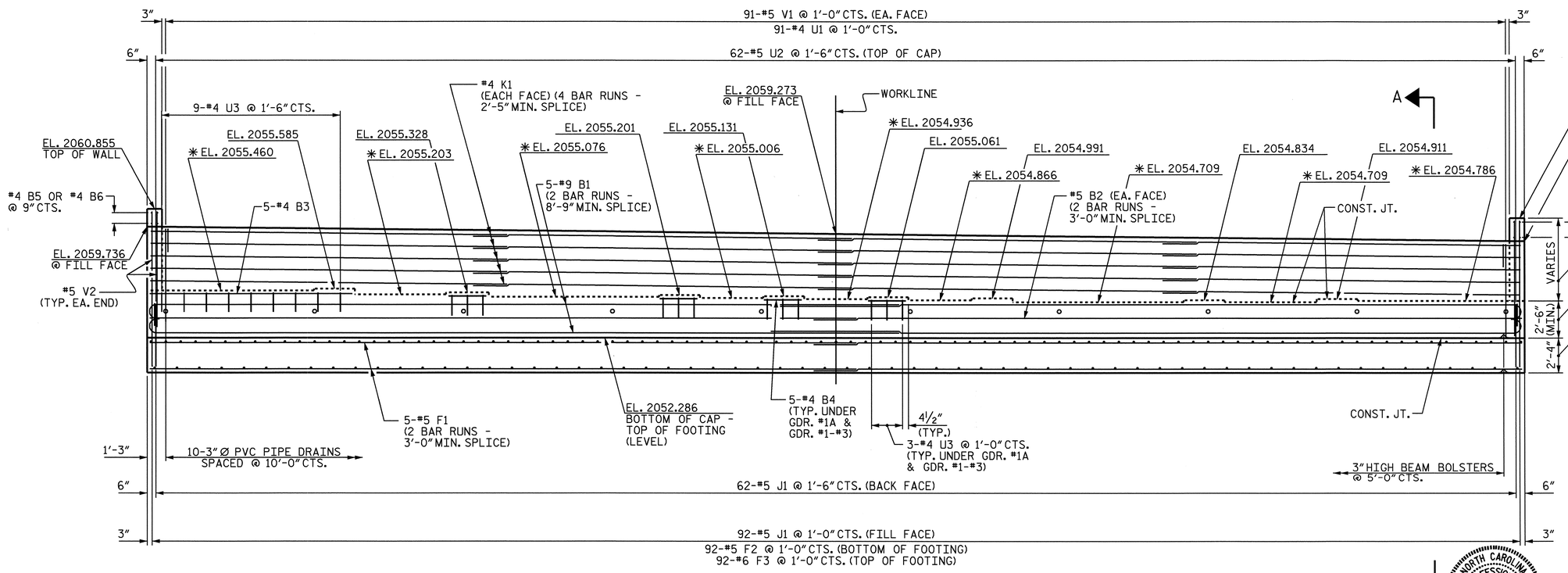


## ELEVATION

✱FOR LOCATION OF ELEVATIONS BETWEEN BRIDGE SEAT BUILD-UPS, SEE SECTION A-A, SHEET 3 OF 3. (WINGS NOT SHOWN FOR CLARITY)

NORTH CAROLINA PROFESSIONAL SEAL 22005 ENGINEER KEITH PASCHAL
11/29/06

DRAWN BY : A.M.KEETER DATE : 11/20/04
CHECKED BY : K. McCAULEY DATE : 11/30/04

06-OCT-2006 08:49
R:\STRUCT@1\ameadows\FINALP@1\B266892@1.DGN
ameadows

PROJECT NO. B-2848
YANCEY/MITCHELL COUNTY
STATION: 11+97.50 -L-

SHEET 1 OF 3

STATE OF NORTH CAROLINA
DEPARTMENT OF TRANSPORTATION
RALEIGH

SUBSTRUCTURE

END BENT 1

| REVISIONS | | | | | | SHEET NO. |
|---|---|---|---|---|---|---|
| NO. | BY: | DATE: | NO. | BY: | DATE: | S-38 |
| 1 | | | 3 | | | TOTAL SHEETS |
| 2 | | | 4 | | | 91 |

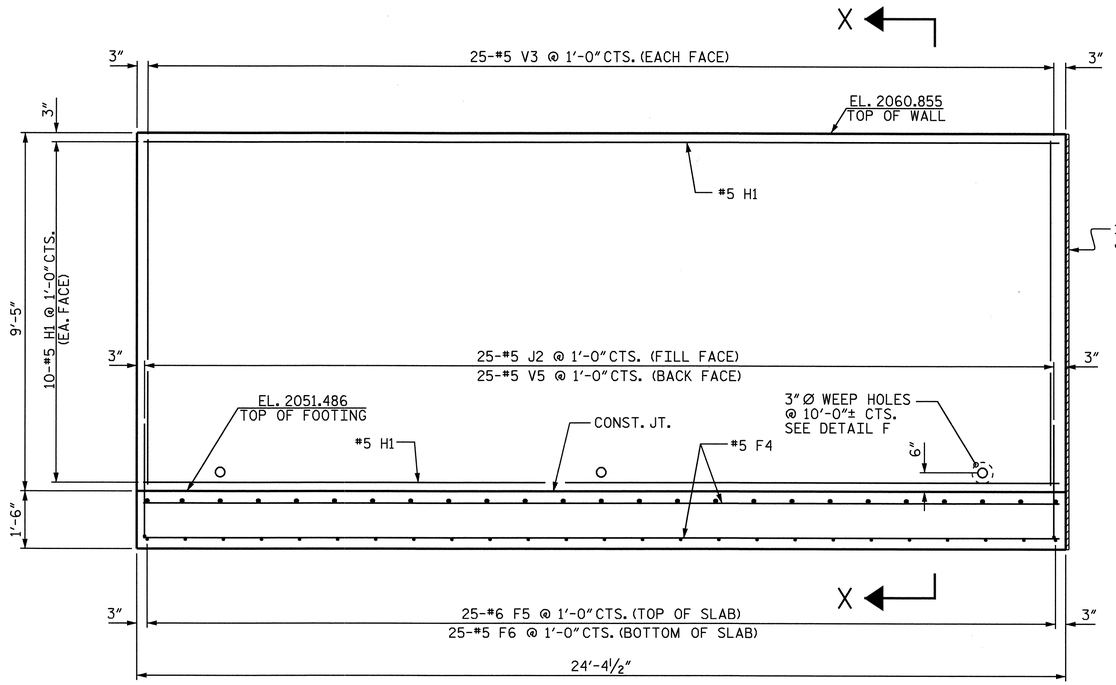


ELEVATION VIEW RETAINING WALL AT WING 1

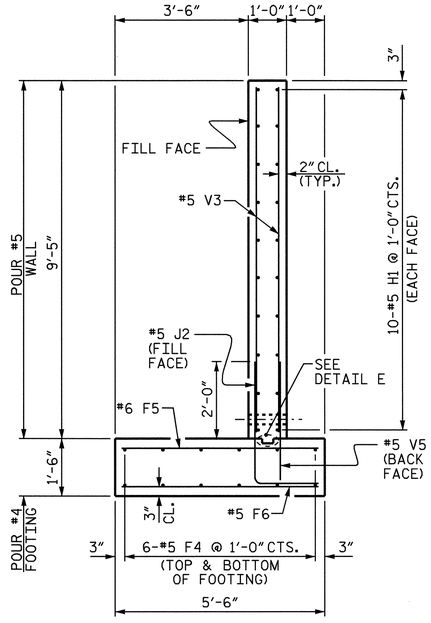


SECTION X-X

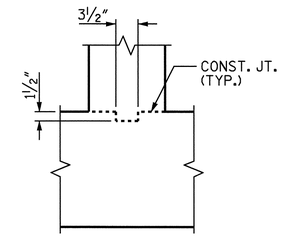


DETAIL E

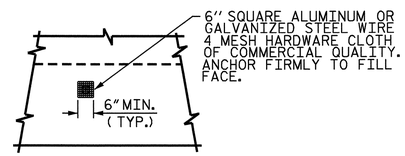


DETAIL F

Y

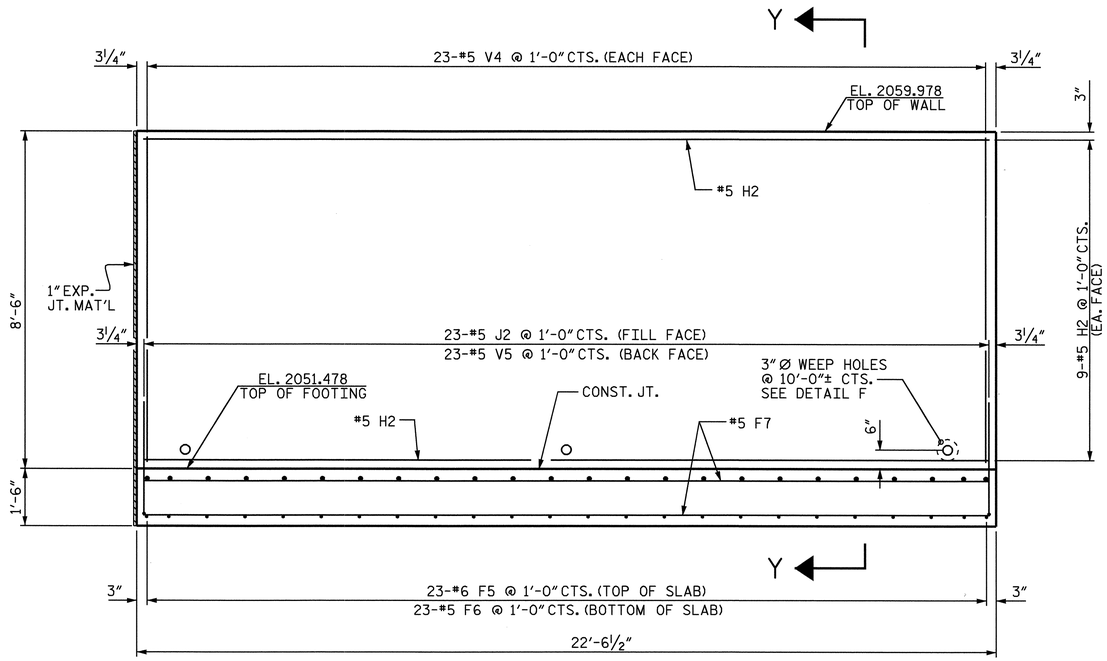


ELEVATION VIEW RETAINING WALL AT WING 2

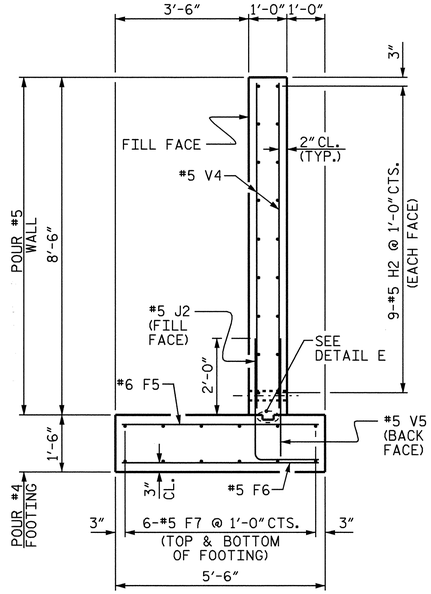


SECTION Y-Y

PROJECT NO. B-2848

YANCEY/MITCHELL COUNTY

STATION: 11+97.50 -L-

SHEET 2 OF 3

STATE OF NORTH CAROLINA
DEPARTMENT OF TRANSPORTATION
RALEIGH

SUBSTRUCTURE
END BENT 1

NORTH CAROLINA PROFESSIONAL SEAL 22005 ENGINEER K. KEITH PASCHAL

11/29/06

| REVISIONS | | | | | | SHEET NO. |
|---|---|---|---|---|---|---|
| NO. | BY: | DATE: | NO. | BY: | DATE: | S-39 |
| 1 | | | 3 | | | TOTAL SHEETS |
| 2 | | | 4 | | | 91 |

DRAWN BY : A.M.KEETER DATE : 11/20/04
CHECKED BY : K. McCAULEY DATE : 12/2/04

06-OCT-2006 08:49
R:\STRUCT01\ameadows\FINALP01\B2668901.DGN
ameadows

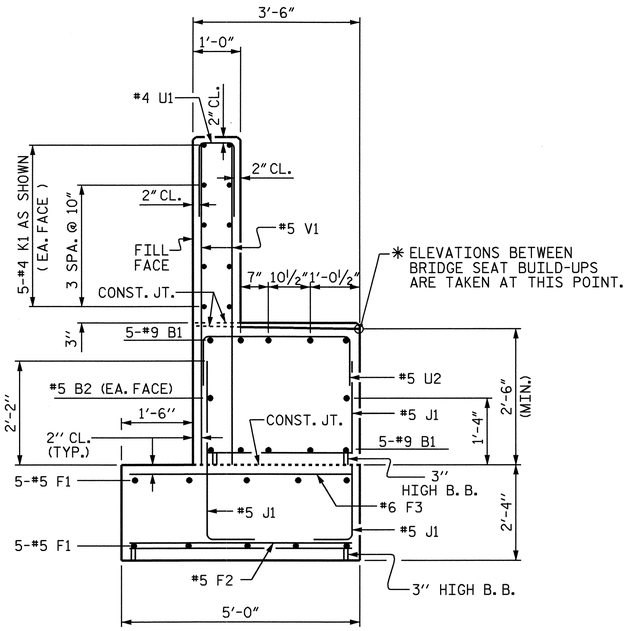


SECTION A-A

## NOTES:

STIRRUPS IN CAP MAY BE SHIFTED AS NECESSARY TO CLEAR ANCHOR BOLTS.

BACKWALL SHALL BE PLACED BEFORE APPLYING THE EPOXY PROTECTIVE COATING.

THE TOP SURFACE AREAS OF THE END BENT CAP SHALL BE CURED IN ACCORDANCE WITH THE STANDARD SPECIFICATIONS EXCEPT THE MEMBRANE CURING COMPOUND METHOD SHALL NOT BE USED.

THE TOP SURFACE OF THE CAP EXCEPT THE BRIDGE SEAT BUILDUPS SHALL BE SLOPED TRANSVERSELY FROM THE FILL FACE TO THE BACK FACE AT THE RATE OF 2%.

PIPE DRAINS MAY BE SHIFTED SLIGHTLY AS NECESSARY TO CLEAR REINFORCING STEEL AND DOWELS.

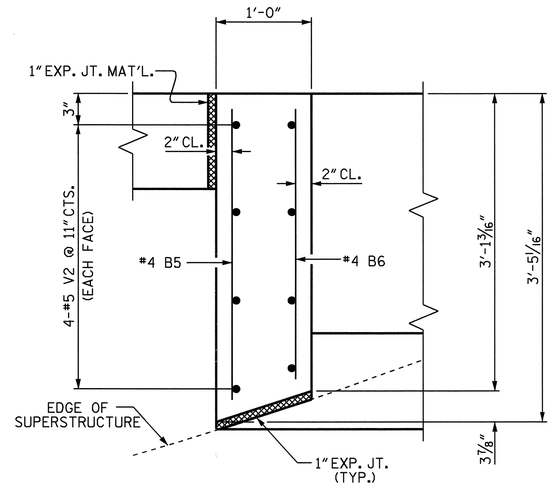


DETAIL A

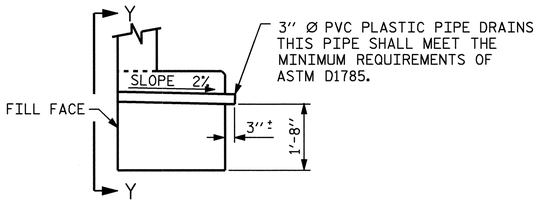


SECTION THRU CAP

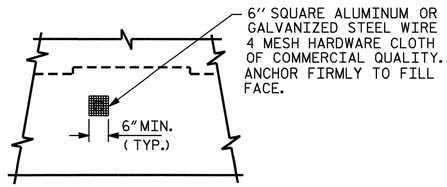


VIEW Y-Y

NOTE: NO SEPARATE PAYMENT WILL BE MADE FOR FURNISHING AND INSTALLING THE PVC PLASTIC PIPE DRAINS, HARDWARE CLOTH AND FASTENERS. THE ENTIRE COST OF THIS WORK SHALL BE INCLUDED IN THE UNIT CONTRACT PRICE BID FOR THE SEVERAL PAY ITEMS.

PIPE DRAIN DETAILS

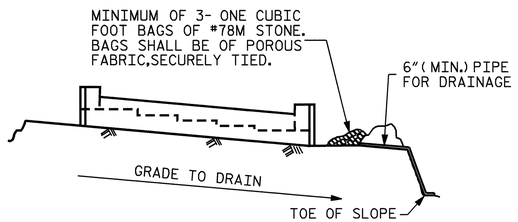


BAGGED STONE AND PIPE SHALL BE PLACED IMMEDIATELY AFTER COMPLETION OF END BENT EXCAVATION. PIPE MAY BE EITHER CONCRETE, CORRUGATED STEEL, CORRUGATED ALUMINUM ALLOY, OR CORRUGATED PLASTIC. PERFORATED PIPE WILL NOT BE ALLOWED.

BAGGED STONE SHALL REMAIN IN PLACE UNTIL THE ENGINEER DIRECTS THAT IT BE REMOVED. THE CONTRACTOR SHALL REMOVE AND DISPOSE OF SILT ACCUMULATIONS AT BAGGED STONE WHEN SO DIRECTED BY THE ENGINEER. BAGS SHALL BE REMOVED AND REPLACED WHENEVER THE ENGINEER DETERMINES THAT THEY HAVE DETERIORATED AND LOST THEIR EFFECTIVENESS.

NO SEPARATE PAYMENT WILL BE MADE FOR THIS WORK AND THE ENTIRE COST OF THIS WORK SHALL BE INCLUDED IN THE UNIT CONTRACT PRICE BID FOR THE SEVERAL PAY ITEMS.

TEMPORARY DRAINAGE AT END BENT

## BAR TYPES

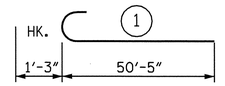


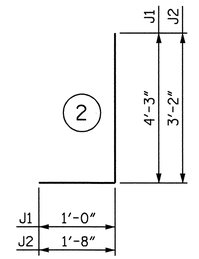


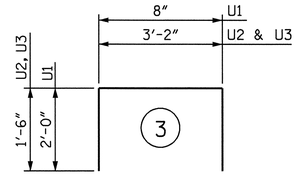


ALL BAR DIMENSIONS ARE OUT TO OUT.

## BILL OF MATERIAL

### END BENT 1

| BAR | NO. | SIZE | TYPE | LENGTH | WEIGHT |
|---|---|---|---|---|---|
| B1 | 20 | #9 | 1 | 51'-8" | 3513 |
| B2 | 4 | #5 | STR | 47'-7" | 199 |
| B3 | 5 | #4 | STR | 13'-7" | 45 |
| B4 | 20 | #4 | STR | 2'-5" | 32 |
| B5 | 4 | #4 | STR | 2'-10" | 8 |
| B6 | 4 | #4 | STR | 2'-8" | 7 |
| | | | | | |
| F1 | 20 | #5 | STR | 47'-7" | 993 |
| F2 | 92 | #5 | STR | 4'-8" | 448 |
| F3 | 92 | #6 | STR | 4'-8" | 645 |
| F4 | 12 | #5 | STR | 24'-0" | 300 |
| F5 | 48 | #6 | STR | 5'-2" | 372 |
| F6 | 48 | #5 | STR | 5'-2" | 259 |
| F7 | 12 | #5 | STR | 22'-2" | 277 |
| | | | | | |
| H1 | 20 | #5 | STR | 24'-0" | 501 |
| H2 | 18 | #5 | STR | 22'-2" | 416 |
| | | | | | |
| J1 | 154 | #5 | 2 | 5'-3" | 843 |
| J2 | 48 | #5 | 2 | 4'-10" | 242 |
| | | | | | |
| K1 | 40 | #4 | STR | 24'-11" | 666 |
| | | | | | |
| U1 | 91 | #4 | 3 | 4'-8" | 284 |
| U2 | 62 | #4 | 3 | 6'-2" | 255 |
| U3 | 21 | #4 | 3 | 6'-2" | 87 |
| | | | | | |
| V1 | 182 | #5 | STR | 6'-2" | 1171 |
| V2 | 16 | #5 | STR | 7'-5" | 124 |
| V3 | 50 | #5 | STR | 9'-1" | 469 |
| V4 | 46 | #5 | STR | 8'-2" | 392 |
| V5 | 48 | #5 | STR | 3'-2" | 159 |

REINFORCING STEEL = 12707 LBS

CLASS A CONCRETE BREAKDOWN

| | |
|---|---|
| POUR #1 - FOOTING | = 39.8 C.Y. |
| POUR #2- CAP | = 32.6 C.Y. |
| POUR #3- BACKWALL | = 15.6 C.Y. |
| POUR #4- WALL FOOTINGS | = 14.3 C.Y. |
| POUR #5- WALLS | = 15.9 C.Y. |
| TOTAL CLASS A CONCRETE | = 118.2 C.Y. |
| FOUNDATION EXCAVATION | = 352.0 C.Y. |

PROJECT NO. B-2848

YANCEY/MITCHELL COUNTY

STATION: 11+97.50 -L-

SHEET 3 OF 3

STATE OF NORTH CAROLINA
DEPARTMENT OF TRANSPORTATION
RALEIGH

SUBSTRUCTURE

END BENT 1

NORTH CAROLINA PROFESSIONAL SEAL 22005 ENGINEER KEITH PASCHAL

1/29/06

| REVISIONS | | | | | | SHEET NO. |
|---|---|---|---|---|---|---|
| NO. | BY: | DATE: | NO. | BY: | DATE: | S-40 |
| 1 | | | 3 | | | TOTAL SHEETS |
| 2 | | | 4 | | | 91 |

DRAWN BY : A.M.KEETER DATE : 11/20/04
CHECKED BY : K.McCAULEY DATE : 12/1/04

31-AUG-2006 12:33
R:\STRUCT01\ameadows\FINALP01\B26689_1.DGN
ameadows

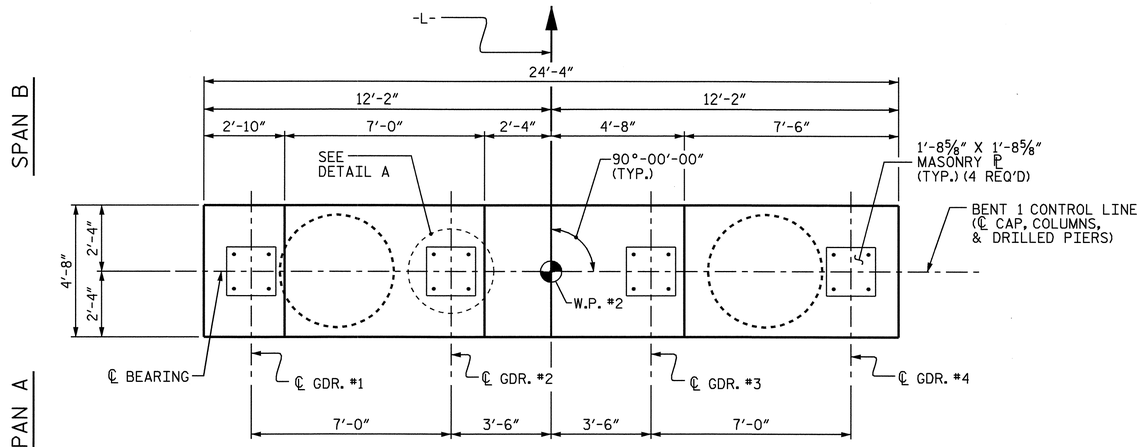


## PLAN

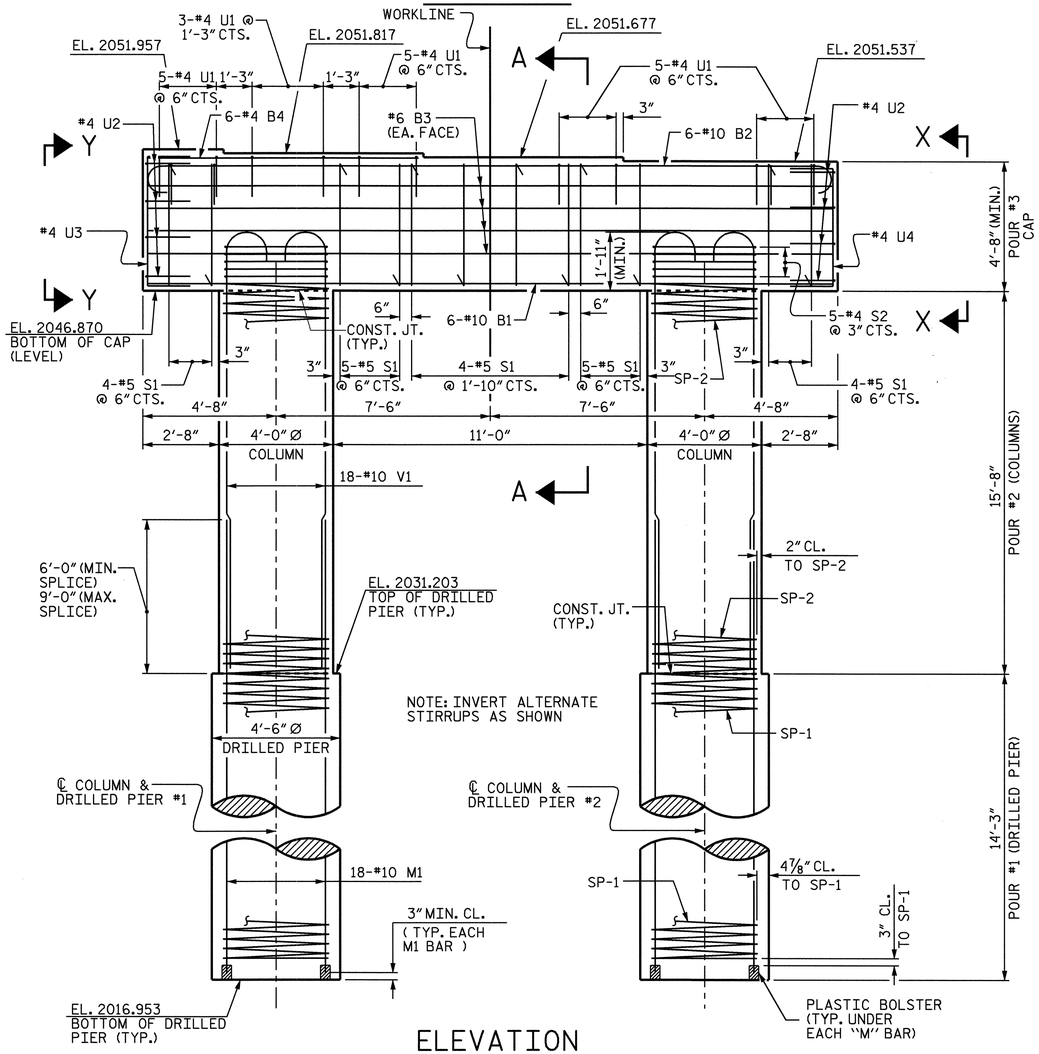


## ELEVATION

REINFORCING STEEL AND DIMENSIONS TYPICAL FOR ALL DRILLED PIERS AND COLUMNS

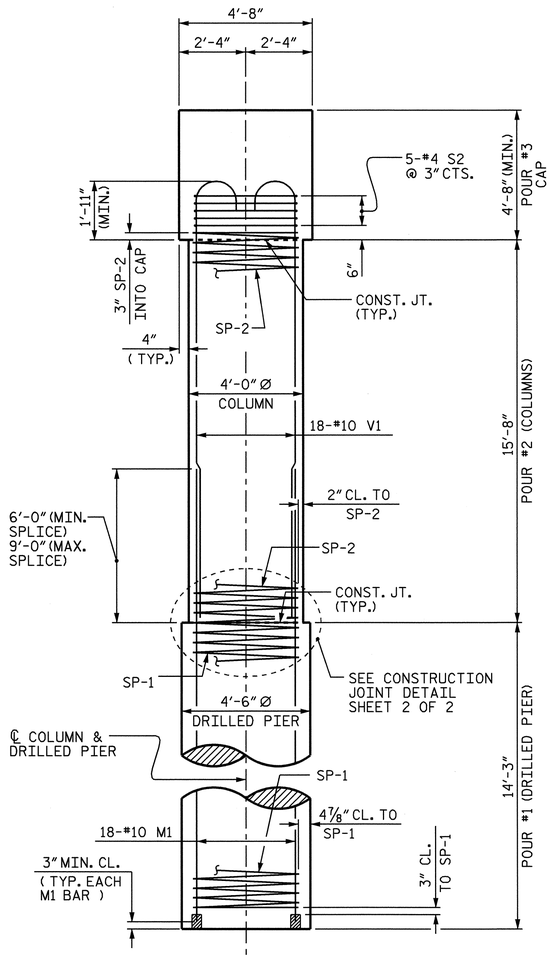


## END ELEVATION

REINFORCING STEEL AND DIMENSIONS TYPICAL FOR ALL DRILLED PIERS AND COLUMNS

## NOTES

STIRRUPS IN CAP MAY BE SHIFTED AS NECESSARY TO CLEAR ANCHOR BOLTS.

HOOKS ON "V" BARS MAY BE TURNED AS NECESSARY FOR PLACING REINFORCING STEEL.

ALL STEEL IN THE DRILLED PIERS IS INCLUDED IN THE PAY ITEMS FOR "REINFORCING STEEL" AND "SPIRAL COLUMN REINFORCING STEEL".

THE CONTRACTOR'S ATTENTION IS CALLED TO THE FACT THAT THE LONGITUDINAL REINFORCEMENT FOR THE DRILLED PIERS IS DETAILED WITH 3 FEET OF EXTRA LENGTH.

NO SEPARATE PAYMENT WILL BE MADE FOR CSL TUBES. CSL TUBES WILL BE INCLUDED IN THE UNIT BID PRICE FOR DRILLED PIERS.

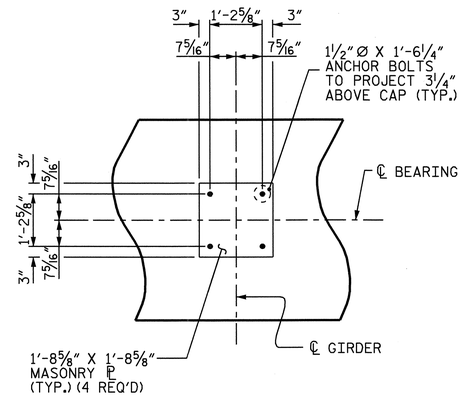


## DETAIL A

PROJECT NO. B-2848

YANCEY/MITCHELL COUNTY

STATION: 11+97.50 -L-

SHEET 1 OF 2

STATE OF NORTH CAROLINA
DEPARTMENT OF TRANSPORTATION
RALEIGH

SUBSTRUCTURE
BENT 1

NORTH CAROLINA PROFESSIONAL SEAL 22005 ENGINEER A. KEITH PASCHAL

11/29/06

| REVISIONS | | | | | | SHEET NO. |
|---|---|---|---|---|---|---|
| NO. | BY: | DATE: | NO. | BY: | DATE: | S-41 |
| 1 | | | 3 | | | TOTAL SHEETS |
| 2 | | | 4 | | | 91 |

DRAWN BY : K. McCAULEY DATE : 6/2/04
CHECKED BY : A. M. KEETER DATE : 10/19/04

31-AUG-2006 12:31
R:\STRUCTØ1\ameadows\FINALPØ1\B2848_ØØ.DGN
ameadows

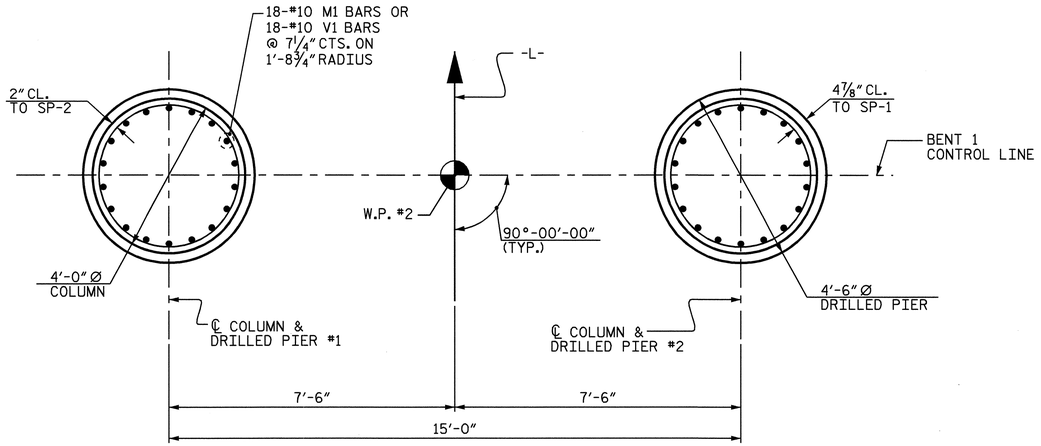


## PLAN OF COLUMNS AND DRILLED PIERS

REINFORCING STEEL AND DIMENSIONS ARE
TYPICAL FOR ALL COLUMNS AND DRILLED PIERS

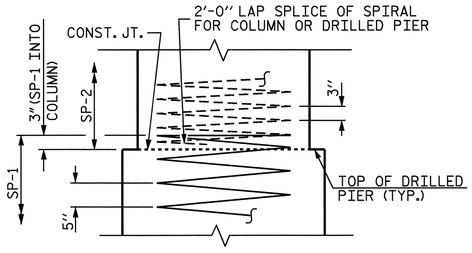


## CONSTRUCTION JOINT DETAIL

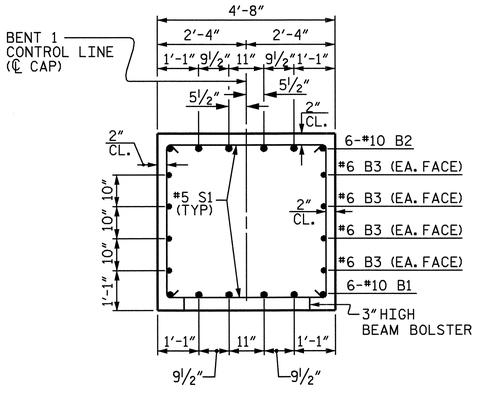


## SECTION A-A

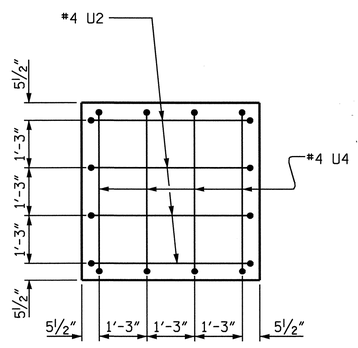


## VIEW X-X

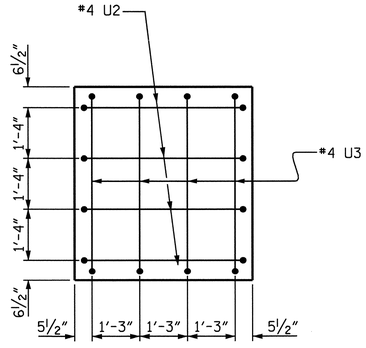


## VIEW Y-Y

## BAR TYPES

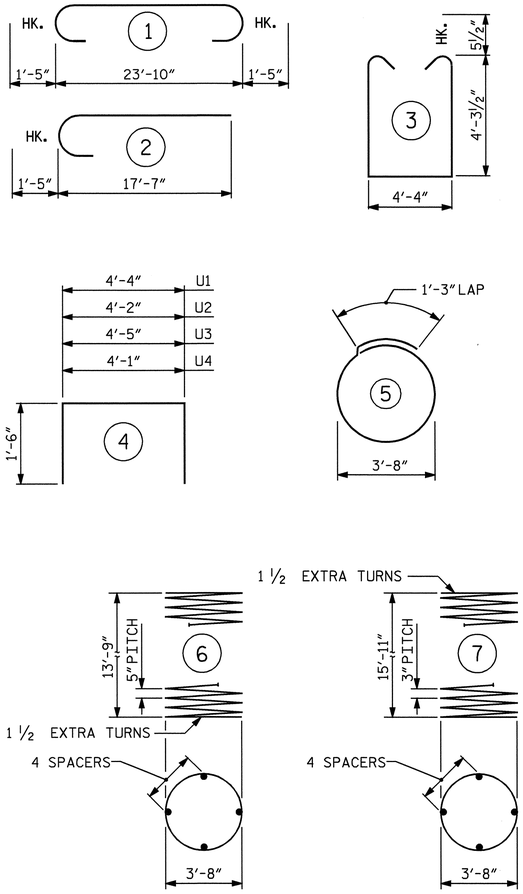


ALL BAR DIMENSIONS ARE OUT TO OUT.

## BILL OF MATERIAL

### BENT 1

| BAR | NO. | SIZE | TYPE | LENGTH | WEIGHT |
|---|---|---|---|---|---|
| B1 | 6 | #10 | STR | 24'-0" | 620 |
| B2 | 6 | #10 | 1 | 26'-8" | 688 |
| B3 | 8 | #6 | STR | 24'-0" | 288 |
| B4 | 6 | #4 | STR | 9'-6" | 38 |
| | | | | | |
| M1 | 36 | #10 | STR | 23'-0" | 3563 |
| | | | | | |
| S1 | 22 | #5 | 3 | 13'-10" | 317 |
| S2 | 10 | #4 | 5 | 12'-10" | 86 |
| | | | | | |
| U1 | 23 | #4 | 4 | 7'-4" | 113 |
| U2 | 8 | #4 | 4 | 7'-2" | 38 |
| U3 | 4 | #4 | 4 | 7'-5" | 20 |
| U4 | 4 | #4 | 4 | 7'-1" | 19 |
| | | | | | |
| V1 | 36 | #10 | 2 | 19'-0" | 2943 |

| | |
|---|---|
| REINFORCING STEEL | = 8733 LBS |

| | | | | | |
|---|---|---|---|---|---|
| SP-1 | 2 | ✳ | 6 | 394'-4" | 823 |
| SP-2 | 2 | ✳✳ | 7 | 742'-4" | 992 |

| | |
|---|---|
| SPIRAL COLUMN | |
| REINFORCING STEEL | = 1815 LBS |
| CLASS A CONCRETE BREAKDOWN | |
| POUR 2 COLUMN | 14.6 C.Y. |
| POUR 3 CAP | 20.3 C.Y. |
| TOTAL | 34.9 C.Y. |
| DRILLED PIER CONCRETE | |
| POUR 1 DRILLED PIERS | 16.8 C.Y. |
| TOTAL | 16.8 C.Y. |
| 4'-6" Ø DRILLED PIERS | |
| IN SOIL | LINEAR FEET 12.5 |
| 4'-6" Ø DRILLED PIERS | |
| NOT IN SOIL | LINEAR FEET 16.0 |
| PERMANENT STEEL CASING FOR | |
| 4'-6" Ø DRILLED PIERS | LINEAR FEET 12.4 |
| CROSSHOLE SONIC LOGGING | = 1 EACH |
| ▲ CSL TUBES | LINEAR FEET 134.0 |

✳ THE SP-1 SPIRAL REINFORCING STEEL SHALL BE W31 OR D-31 COLD DRAWN WIRE OR #5 PLAIN OR DEFORMED.

✳✳ THE SP-2 SPIRAL REINFORCING STEEL SHALL BE W20 OR D-20 COLD DRAWN WIRE OR #4 PLAIN OR DEFORMED.

▲ NO SEPARATE PAYMENT WILL BE MADE FOR CSL TUBES. CSL TUBES WILL BE INCLUDED IN THE UNIT BID PRICE FOR DRILLED PIERS.

PROJECT NO. B-2848

YANCEY/MITCHELL COUNTY

STATION: 11+97.50 -L-

SHEET 2 OF 2

STATE OF NORTH CAROLINA
DEPARTMENT OF TRANSPORTATION
RALEIGH

SUBSTRUCTURE
BENT 1

NORTH CAROLINA PROFESSIONAL SEAL 22005 ENGINEER KEITH PASCHAL

11/29/06

| REVISIONS | | | | | | SHEET NO. |
|---|---|---|---|---|---|---|
| NO. | BY: | DATE: | NO. | BY: | DATE: | S-42 |
| 1 | | | 3 | | | TOTAL SHEETS |
| 2 | | | 4 | | | 91 |

DRAWN BY : K. McCAULEY DATE : 6/2/04
CHECKED BY : A. M. KEETER DATE : 10/19/04

29-NOV-2006 11:33
F:\STRUCTØ1\ameadows\FINALPØ1\B2848_ØØ.DGN
ameadows

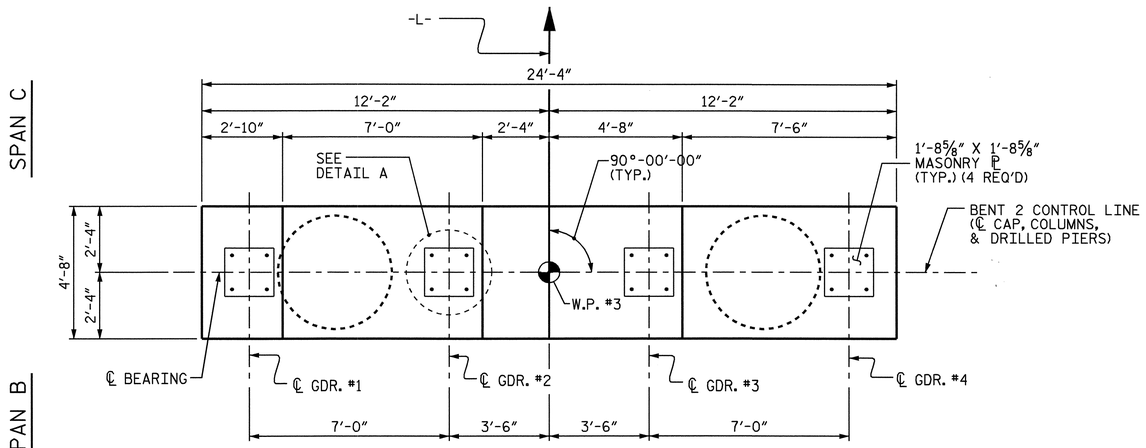


## PLAN

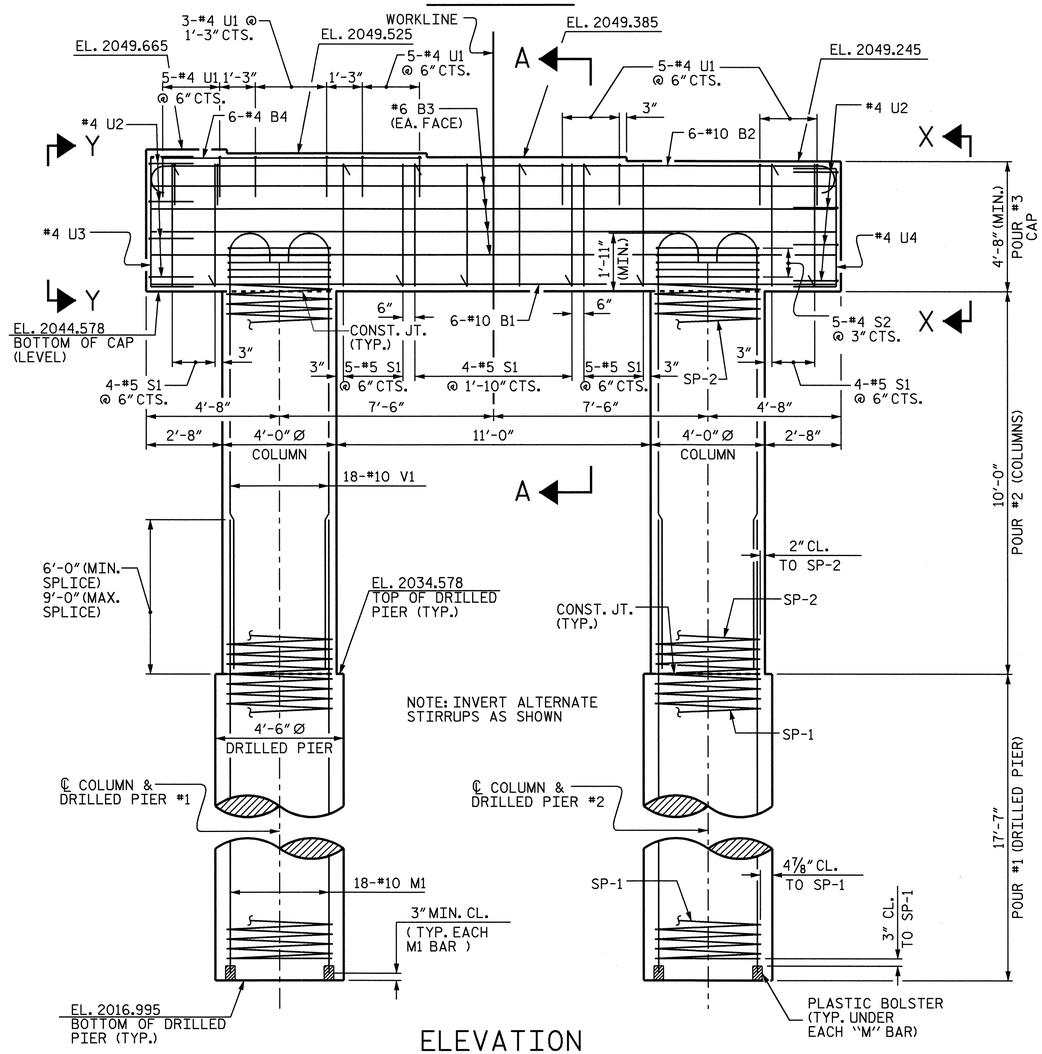


## ELEVATION

REINFORCING STEEL AND DIMENSIONS TYPICAL FOR ALL DRILLED PIERS AND COLUMNS

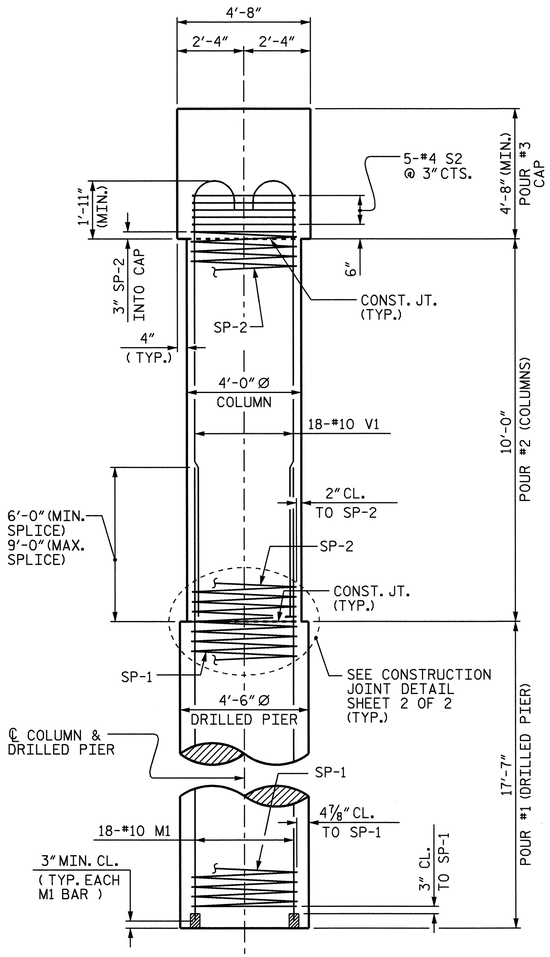


## END ELEVATION

REINFORCING STEEL AND DIMENSIONS TYPICAL FOR ALL DRILLED PIERS AND COLUMNS

## NOTES

STIRRUPS IN CAP MAY BE SHIFTED AS NECESSARY TO CLEAR ANCHOR BOLTS.

HOOKS ON "V" BARS MAY BE TURNED AS NECESSARY FOR PLACING REINFORCING STEEL.

ALL STEEL IN THE DRILLED PIERS IS INCLUDED IN THE PAY ITEMS FOR "REINFORCING STEEL" AND "SPIRAL COLUMN REINFORCING STEEL".

THE CONTRACTOR'S ATTENTION IS CALLED TO THE FACT THAT THE LONGITUDINAL REINFORCEMENT FOR THE DRILLED PIERS IS DETAILED WITH 3 FEET OF EXTRA LENGTH.

NO SEPARATE PAYMENT WILL BE MADE FOR CSL TUBES. CSL TUBES WILL BE INCLUDED IN THE UNIT BID PRICE FOR DRILLED PIERS.

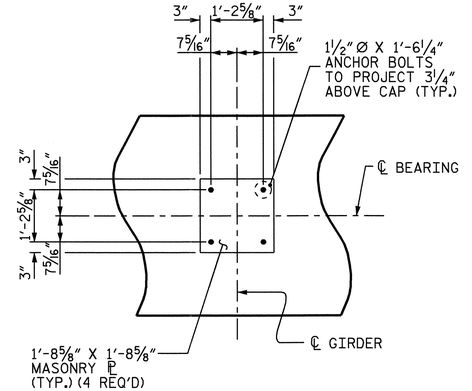


## DETAIL A

PROJECT NO. B-2848

YANCEY/MITCHELL COUNTY

STATION: 11+97.50 -L-

SHEET 1 OF 2

STATE OF NORTH CAROLINA
DEPARTMENT OF TRANSPORTATION
RALEIGH

SUBSTRUCTURE
BENT 2

NORTH CAROLINA PROFESSIONAL SEAL 22005 ENGINEER A. KEITH PASCHAL
11/29/06

| REVISIONS | | | | | | SHEET NO. |
|---|---|---|---|---|---|---|
| NO. | BY: | DATE: | NO. | BY: | DATE: | S-43 |
| 1 | | | 3 | | | TOTAL SHEETS |
| 2 | | | 4 | | | 91 |

DRAWN BY : K. McCAULEY DATE : 6/2/04
CHECKED BY : A. M. KEETER DATE : 10/19/04

31-AUG-2006 12:31
R:\STRUCTØ1\ameadows\FINALPØ1\B2848_ØØ.DGN
ameadows

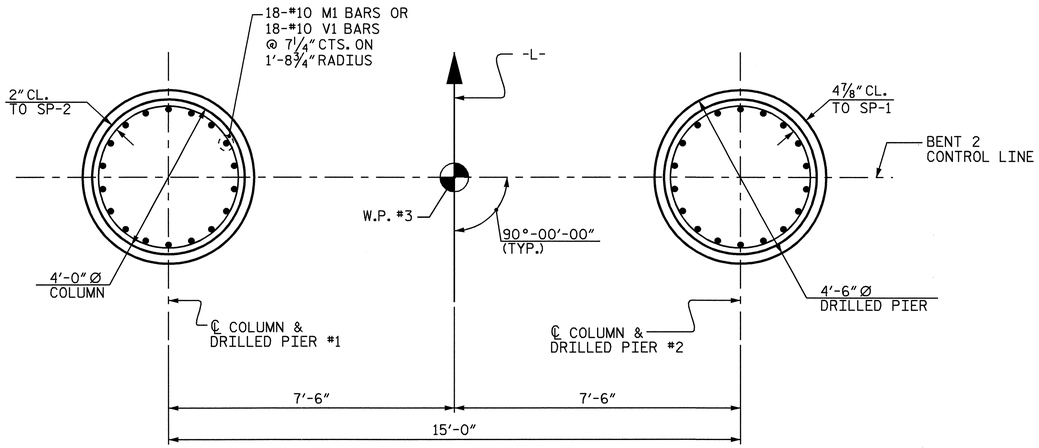


## PLAN OF COLUMNS AND DRILLED PIERS

REINFORCING STEEL AND DIMENSIONS ARE
TYPICAL FOR ALL COLUMNS AND DRILLED PIERS

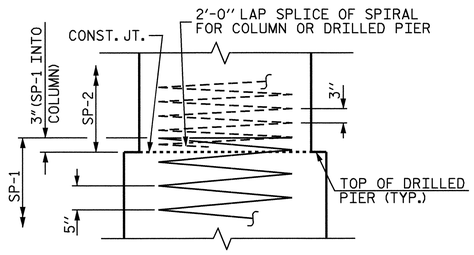


## CONSTRUCTION JOINT DETAIL

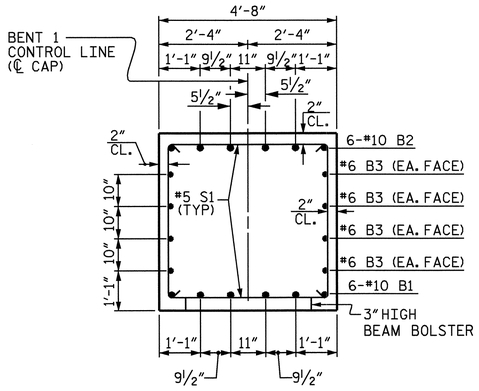


## SECTION A-A

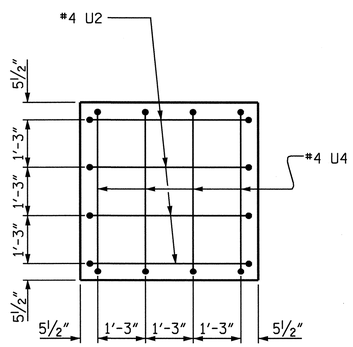


## VIEW X-X

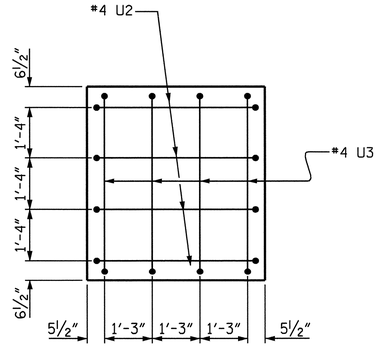


## VIEW Y-Y

## BAR TYPES

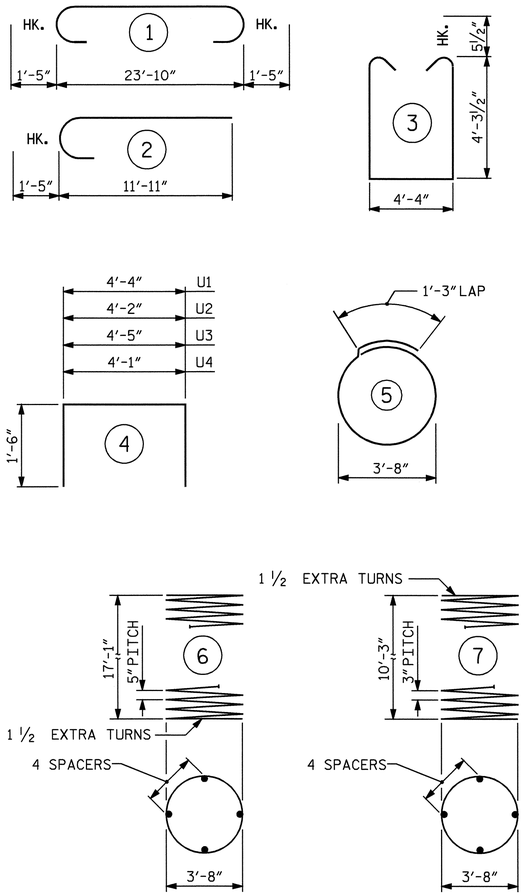


ALL BAR DIMENSIONS ARE OUT TO OUT.

## BILL OF MATERIAL

### BENT 2

| BAR | NO. | SIZE | TYPE | LENGTH | WEIGHT |
|---|---|---|---|---|---|
| B1 | 6 | #10 | STR | 24'-0" | 620 |
| B2 | 6 | #10 | 1 | 26'-8" | 688 |
| B3 | 8 | #6 | STR | 24'-0" | 288 |
| B4 | 6 | #4 | STR | 9'-6" | 38 |
| M1 | 36 | #10 | STR | 26'-4" | 4079 |
| S1 | 22 | #5 | 3 | 13'-10" | 317 |
| S2 | 10 | #4 | 5 | 12'-10" | 86 |
| U1 | 23 | #4 | 4 | 7'-4" | 113 |
| U2 | 8 | #4 | 4 | 7'-2" | 38 |
| U3 | 4 | #4 | 4 | 7'-5" | 20 |
| U4 | 4 | #4 | 4 | 7'-1" | 19 |
| V1 | 36 | #10 | 2 | 13'-4" | 2065 |
| REINFORCING STEEL = 8371 LBS | | | | | |
| SP-1 | 2 | * | 6 | 485'-9" | 1013 |
| SP-2 | 2 | ** | 7 | 484'-2" | 647 |
| SPIRAL COLUMN | | | | | |
| REINFORCING STEEL = 1660 LBS | | | | | |

| CLASS A CONCRETE BREAKDOWN | |
|---|---|
| POUR 2 COLUMN | 9.3 C.Y. |
| POUR 3 CAP | 20.3 C.Y. |
| TOTAL | 29.6 C.Y. |
| DRILLED PIER CONCRETE | |
| POUR 1 DRILLED PIERS | 20.7 C.Y. |
| TOTAL | 20.7 C.Y. |
| 4'-6" Ø DRILLED PIERS | |
| IN SOIL | LINEAR FEET 19.2 |
| 4'-6" Ø DRILLED PIERS | |
| NOT IN SOIL | LINEAR FEET 16.0 |
| PERMANENT STEEL CASING FOR 4'-6" Ø DRILLED PIERS | LINEAR FEET 19.2 |
| CROSSHOLE SONIC LOGGING | = 1 EACH |
| ▲ CSL TUBES | LINEAR FEET 160.7 |

* THE SP-1 SPIRAL REINFORCING STEEL SHALL BE W31 OR D-31 COLD DRAWN WIRE OR #5 PLAIN OR DEFORMED.

** THE SP-2 SPIRAL REINFORCING STEEL SHALL BE W20 OR D-20 COLD DRAWN WIRE OR #4 PLAIN OR DEFORMED.

▲ NO SEPARATE PAYMENT WILL BE MADE FOR CSL TUBES. CSL TUBES WILL BE INCLUDED IN THE UNIT BID PRICE FOR DRILLED PIERS.

PROJECT NO. B-2848

YANCEY/MITCHELL COUNTY

STATION: 11+97.50 -L-

SHEET 2 OF 2

STATE OF NORTH CAROLINA
DEPARTMENT OF TRANSPORTATION
RALEIGH

SUBSTRUCTURE
BENT 2

NORTH CAROLINA PROFESSIONAL SEAL 22005 ENGINEER KEITH PASCHAL
11/29/06

| REVISIONS | | | | | | SHEET NO. |
|---|---|---|---|---|---|---|
| NO. | BY: | DATE: | NO. | BY: | DATE: | S-44 |
| 1 | | | 3 | | | TOTAL SHEETS |
| 2 | | | 4 | | | 91 |

DRAWN BY : K. McCAULEY DATE : 6/2/04
CHECKED BY : A. M. KEETER DATE : 10/19/04

29-NOV-2006 11:33
F:\STRUCTURE\ameadows\FINALPLT\B2848_PLT.DGN
ameadows

## NOTES

STIRRUPS IN CAP MAY BE SHIFTED AS NECESSARY TO CLEAR ANCHOR BOLTS.

BACKWALL SHALL BE PLACED BEFORE APPLYING THE EPOXY PROTECTIVE COATING.

THE TOP SURFACE AREAS OF THE END BENT CAP SHALL BE CURED IN ACCORDANCE WITH THE STANDARD SPECIFICATIONS EXCEPT THE MEMBRANE CURING COMPOUND METHOD SHALL NOT BE USED.

THE TOP SURFACE OF THE CAP EXCEPT THE BRIDGE SEAT BUILDUPS SHALL BE SLOPED TRANSVERSELY FROM THE FILL FACE TO THE BACK FACE AT THE RATE OF 2%.

SEE "SUPERSTRUCTURE TYPICAL SECTION" AND "STRUCTURE DRAINAGE SYSTEM" SHEETS FOR DETAILS.

PIPE DRAINS MAY BE SHIFTED SLIGHTLY AS NECESSARY TO CLEAR REINFORCING STEEL AND DOWELS.

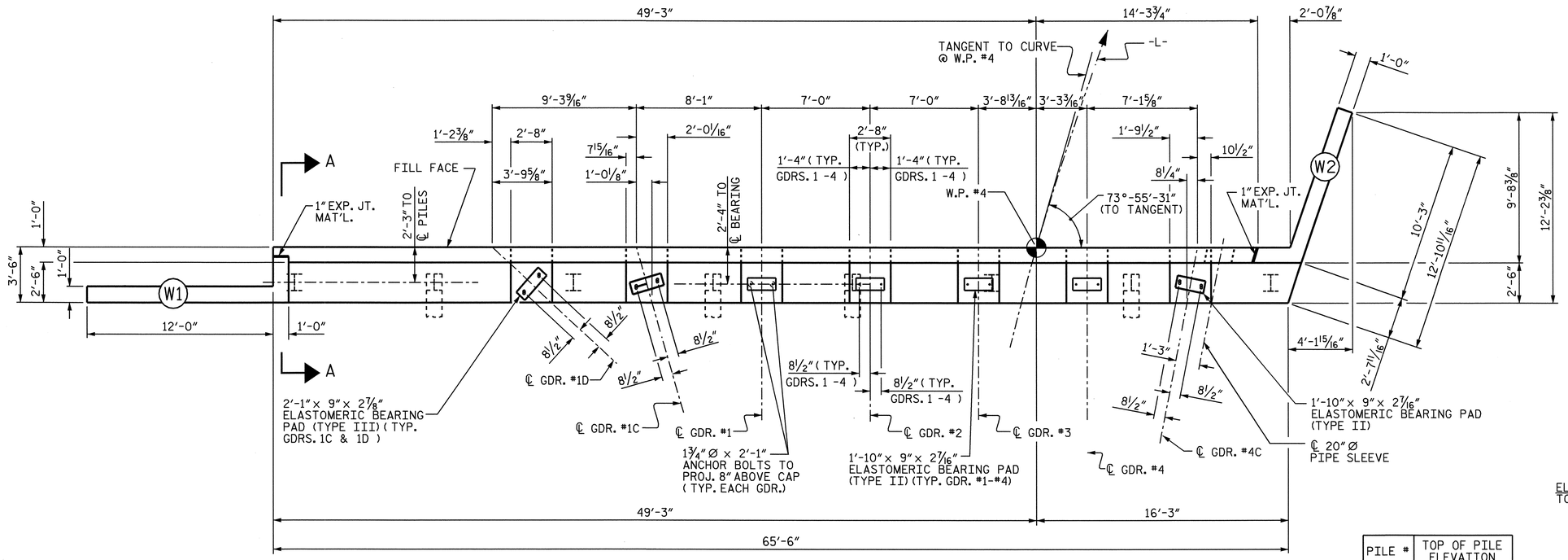


## PLAN

| PILE # | TOP OF PILE ELEVATION |
|---|---|
| 1 | 2051.421 |
| 2 | 2050.874 |
| 3 | 2050.327 |
| 4 | 2049.780 |
| 5 | 2049.233 |
| 6 | 2048.686 |
| 7 | 2048.138 |
| 8 | 2047.591 |

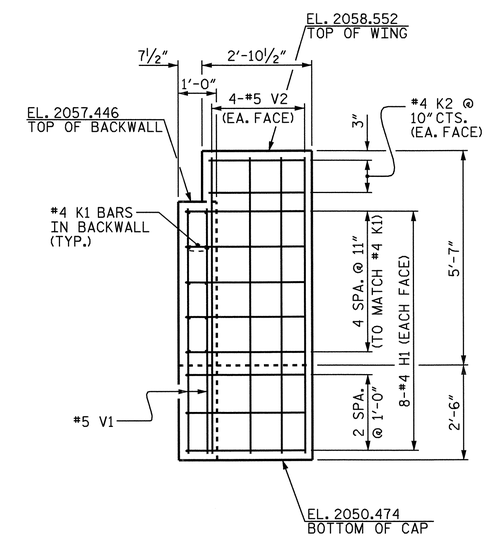


## SECTION A-A

(CAP STEEL NOT SHOWN)

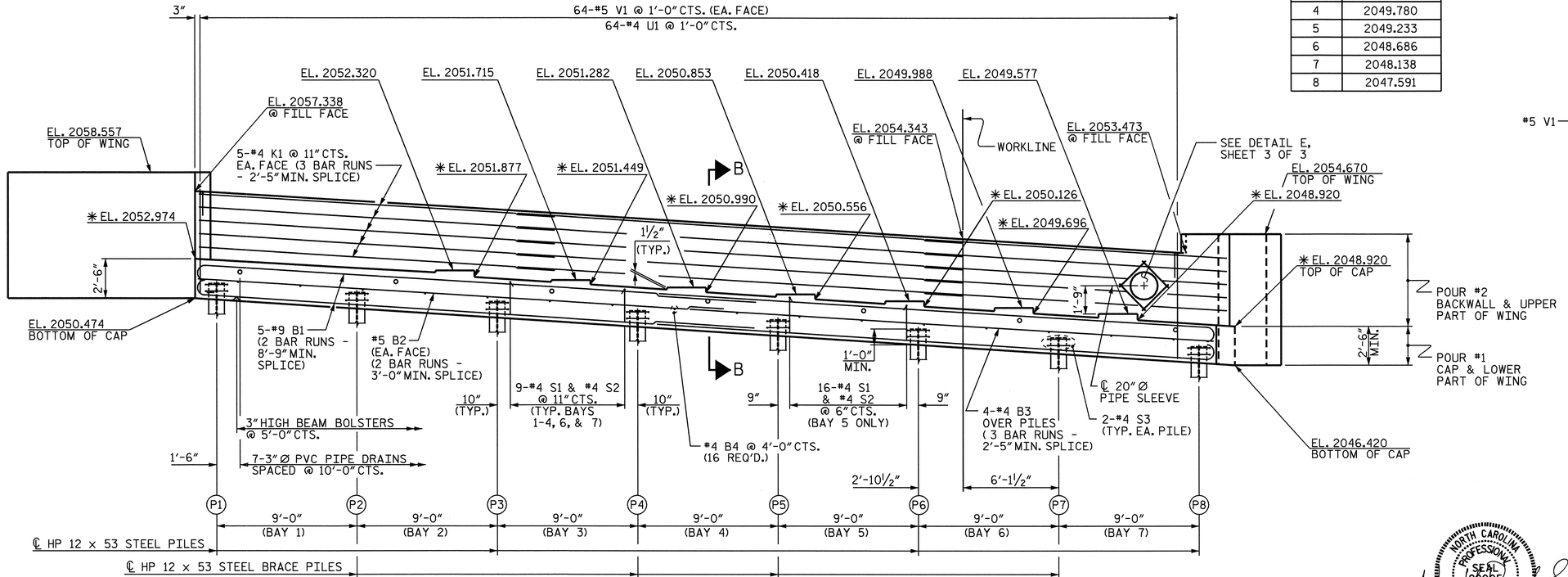


## ELEVATION

*FOR LOCATION OF ELEVATIONS BETWEEN BRIDGE SEAT BUILD-UPS, SEE SECTION A-A, SHEET 3 OF 3.

NORTH CAROLINA PROFESSIONAL SEAL 22005 ENGINEER IAN KEITH PASCHAL
11/29/06

PROJECT NO. B-2848
YANCEY/MITCHELL COUNTY
STATION: 11+97.50 -L-

SHEET 1 OF 3

STATE OF NORTH CAROLINA
DEPARTMENT OF TRANSPORTATION
RALEIGH

SUBSTRUCTURE

END BENT 2

| REVISIONS | | | | | | SHEET NO. |
|---|---|---|---|---|---|---|
| NO. | BY: | DATE: | NO. | BY: | DATE: | S-45 |
| 1 | | | 3 | | | TOTAL SHEETS |
| 2 | | | 4 | | | 91 |

DRAWN BY : A.M.KEETER DATE : 11/20/04
CHECKED BY : K.M.McCAULEY DATE : 12/14/04

06-OCT-2006 08:50
R:\STRUCT@1\ameadows\FINALP@1\B266892@1.DGN
ameadows

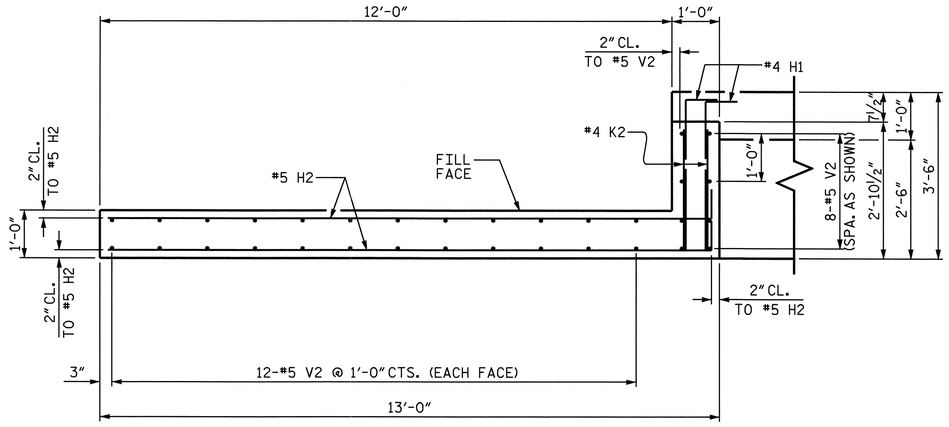


PLAN OF WING 1

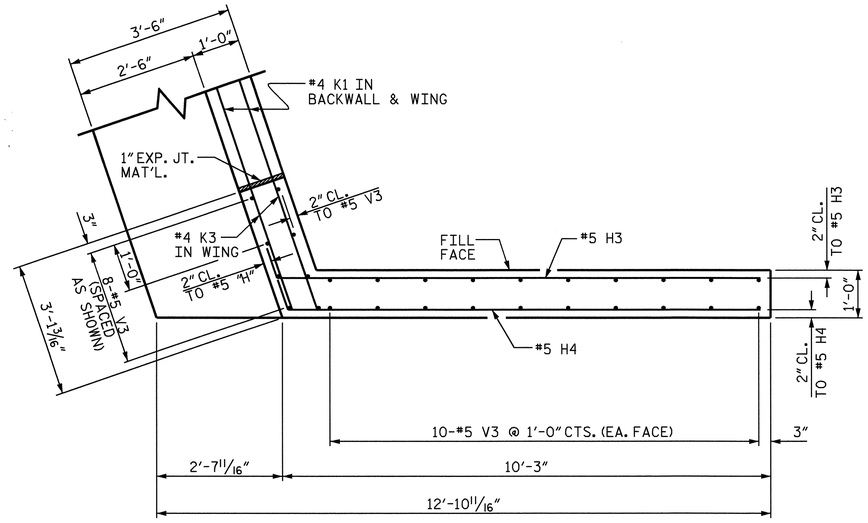


PLAN OF WING 2

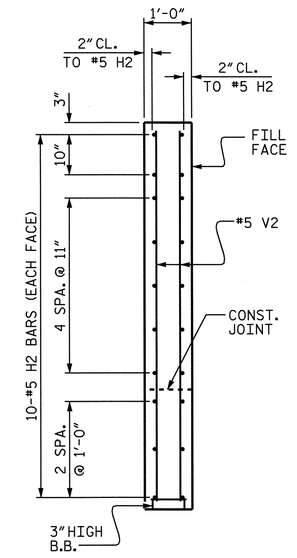


SECTION X-X

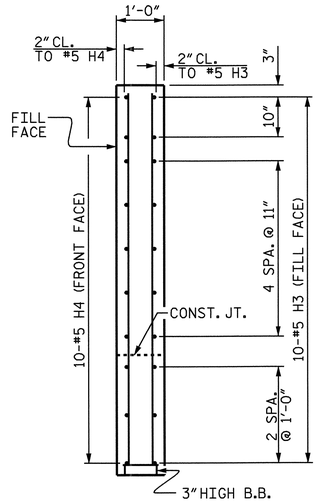


SECTION Y-Y

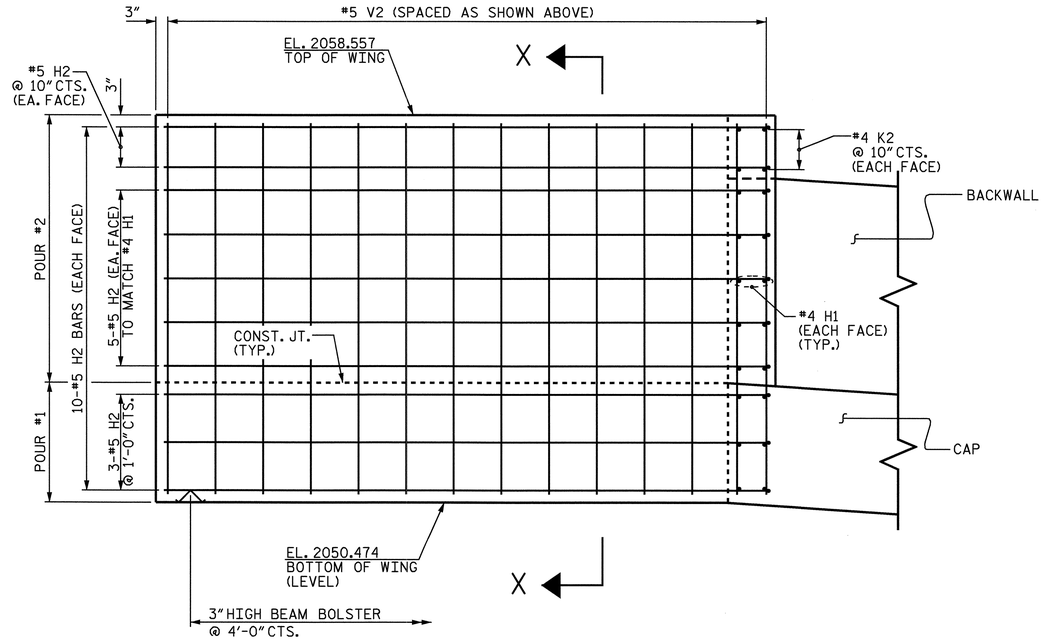


ELEVATION OF WING 1

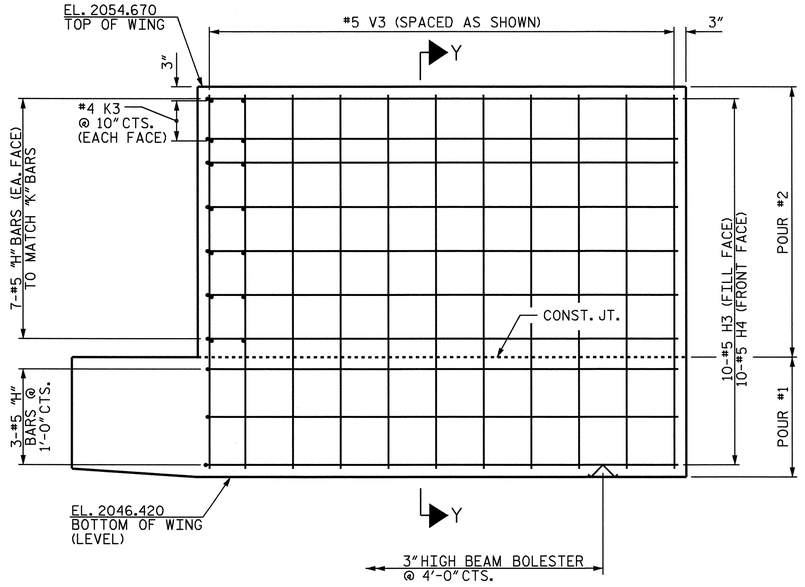


ELEVATION OF WING 2

PROJECT NO. B-2848
YANCEY/MITCHELL COUNTY
STATION: 11+97.50 -L-

SHEET 2 OF 3

STATE OF NORTH CAROLINA
DEPARTMENT OF TRANSPORTATION
RALEIGH

SUBSTRUCTURE

END BENT 2

| REVISIONS | | | | | | SHEET NO. |
|---|---|---|---|---|---|---|
| NO. | BY: | DATE: | NO. | BY: | DATE: | S-46 |
| 1 | | | 3 | | | TOTAL SHEETS |
| 2 | | | 4 | | | 91 |

DRAWN BY : A.M.KEETER DATE : 12/20/04
CHECKED BY : K.McCAULEY DATE : 12/20/04

31-AUG-2006 12:30
R:\STRUCT01\ameadows\FINALP01\B26689_01.DGN
ameadows

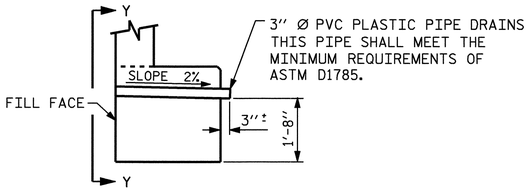


SECTION THRU CAP

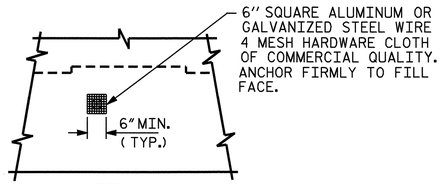


VIEW Y-Y

NOTE: NO SEPARATE PAYMENT WILL BE MADE FOR FURNISHING AND INSTALLING THE PVC PLASTIC PIPE DRAINS, HARDWARE CLOTH AND FASTENERS. THE ENTIRE COST OF THIS WORK SHALL BE INCLUDED IN THE UNIT CONTRACT PRICE BID FOR THE SEVERAL PAY ITEMS.

# PIPE DRAIN DETAILS

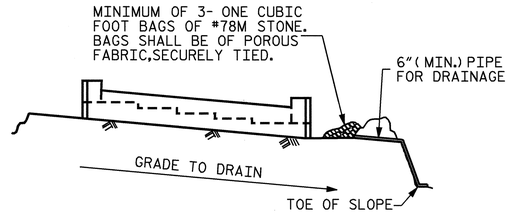


BAGGED STONE AND PIPE SHALL BE PLACED IMMEDIATELY AFTER COMPLETION OF END BENT EXCAVATION. PIPE MAY BE EITHER CONCRETE, CORRUGATED STEEL, CORRUGATED ALUMINUM ALLOY, OR CORRUGATED PLASTIC. PERFORATED PIPE WILL NOT BE ALLOWED.

BAGGED STONE SHALL REMAIN IN PLACE UNTIL THE ENGINEER DIRECTS THAT IT BE REMOVED. THE CONTRACTOR SHALL REMOVE AND DISPOSE OF SILT ACCUMULATIONS AT BAGGED STONE WHEN SO DIRECTED BY THE ENGINEER. BAGS SHALL BE REMOVED AND REPLACED WHENEVER THE ENGINEER DETERMINES THAT THEY HAVE DETERIORATED AND LOST THEIR EFFECTIVENESS.

NO SEPARATE PAYMENT WILL BE MADE FOR THIS WORK AND THE ENTIRE COST OF THIS WORK SHALL BE INCLUDED IN THE UNIT CONTRACT PRICE BID FOR THE SEVERAL PAY ITEMS.

# TEMPORARY DRAINAGE AT END BENT

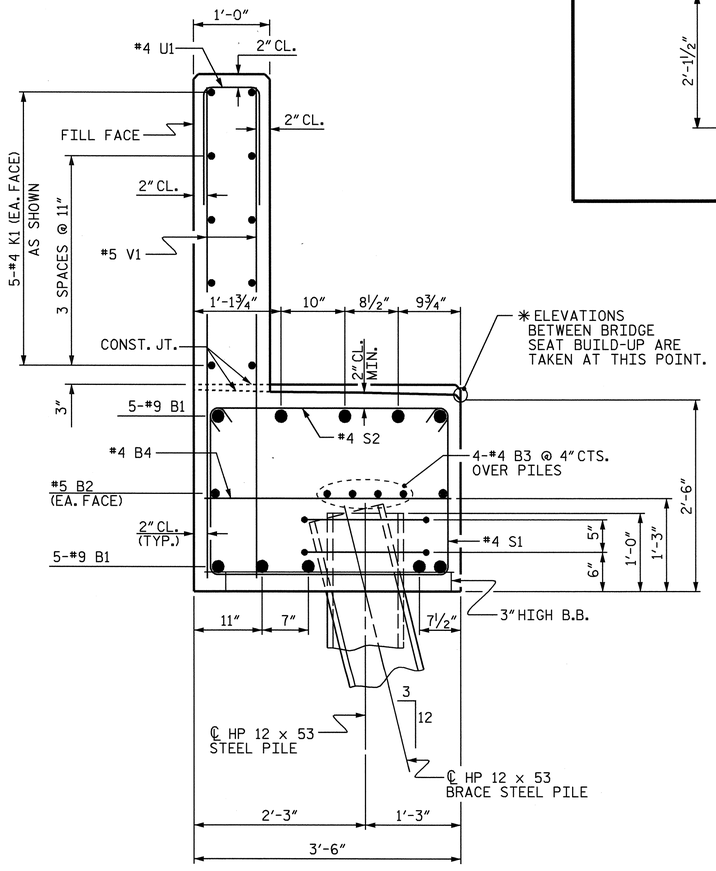


SECTION B-B

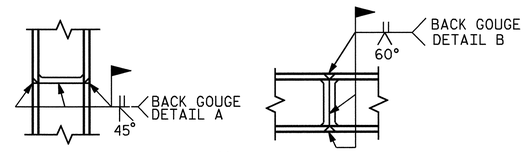


✱✱ PILE VERTICAL

✱✱ PILE HORIZONTAL OR VERTICAL

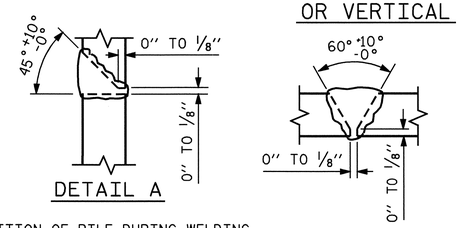


DETAIL A

DETAIL B

✱✱ POSITION OF PILE DURING WELDING.

# PILE SPLICE DETAILS

## BAR TYPES

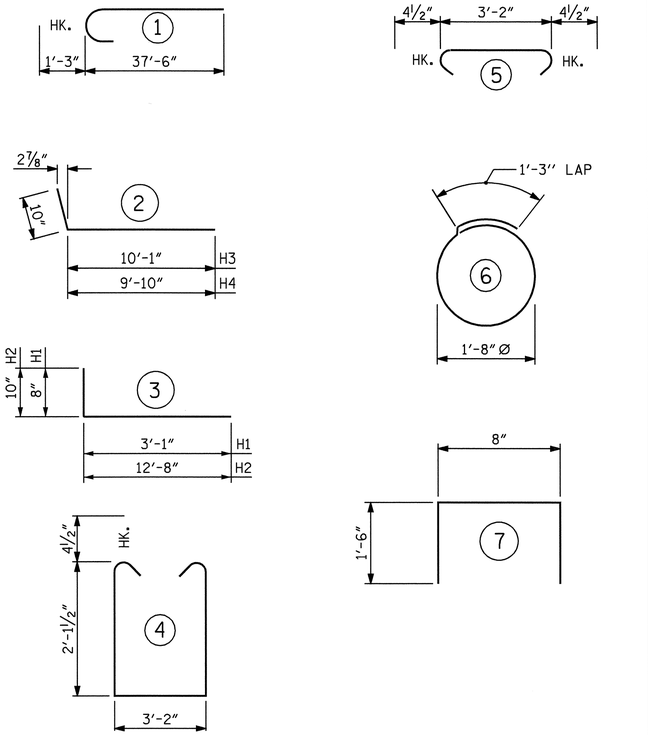


ALL BAR DIMENSIONS ARE OUT TO OUT.

## BILL OF MATERIAL

### END BENT 2

| BAR | NO. | SIZE | TYPE | LENGTH | WEIGHT |
|---|---|---|---|---|---|
| B1 | 20 | #9 | 1 | 38'-9" | 2635 |
| B2 | 4 | #5 | STR | 34'-7" | 144 |
| B3 | 12 | #4 | STR | 23'-8" | 190 |
| B4 | 16 | #4 | STR | 3'-2" | 34 |
| F1 | 16 | #4 | STR | 4'-3" | 71 |
| H1 | 16 | #4 | 3 | 3'-9" | 40 |
| H2 | 20 | #5 | 3 | 13'-6" | 281 |
| H3 | 10 | #5 | 2 | 10'-11" | 114 |
| H4 | 10 | #5 | 2 | 10'-8" | 111 |
| K1 | 30 | #4 | STR | 23'-8" | 474 |
| K2 | 4 | #4 | STR | 2'-6" | 7 |
| K3 | 4 | #4 | STR | 2'-9" | 7 |
| S1 | 70 | #4 | 4 | 8'-2" | 382 |
| S2 | 70 | #4 | 5 | 3'-11" | 183 |
| S3 | 16 | #4 | 6 | 6'-6" | 69 |
| U1 | 64 | #4 | 7 | 3'-8" | 157 |
| V1 | 128 | #5 | STR | 6'-7" | 879 |
| V2 | 32 | #5 | STR | 7'-9" | 259 |
| V3 | 28 | #5 | STR | 7'-11" | 231 |

REINFORCING STEEL = 6268 LBS

CLASS A CONCRETE BREAKDOWN

POUR #1 - (CAP & LOWER PART OF WING) 23.8 C.Y.

POUR #2 - (BACKWALL & UPPER PART OF WING) 15.5 C.Y.

TOTAL CLASS A CONCRETE 39.3 C.Y.

HP 12 X 53 STEEL PILES
NO. 8 LIN. FT. 160

STEEL PILE POINTS 8 EACH

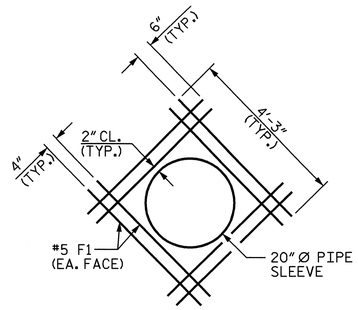


DETAIL E

REINFORCING STEEL IN BACKWALL SHALL BE BENT OR CUT TO CLEAR PIPE SLEEVE.

PROJECT NO. B-2848

YANCEY/MITCHELL COUNTY

STATION: 11+97.50 -L-

SHEET 3 OF 3

STATE OF NORTH CAROLINA
DEPARTMENT OF TRANSPORTATION
RALEIGH

SUBSTRUCTURE

END BENT 2

NORTH CAROLINA PROFESSIONAL SEAL 22008 ENGINEER T. A. KEITH PASCHAL
11/29/06

| REVISIONS | | | | | | SHEET NO. |
|---|---|---|---|---|---|---|
| NO. | BY: | DATE: | NO. | BY: | DATE: | S-47 |
| 1 | | | 3 | | | TOTAL SHEETS |
| 2 | | | 4 | | | 91 |

DRAWN BY : A.M.KEETER DATE : 12/23/04
CHECKED BY : K.McCAULEY DATE : 1/4/05

06-OCT-2006 08:51
R:\STRUCTØ1\ameadows\FINALPØ1\B266891.DGN
ameadows

NOTES :

FOR BERM WIDTH DIMENSIONS, SEE GENERAL DRAWING.

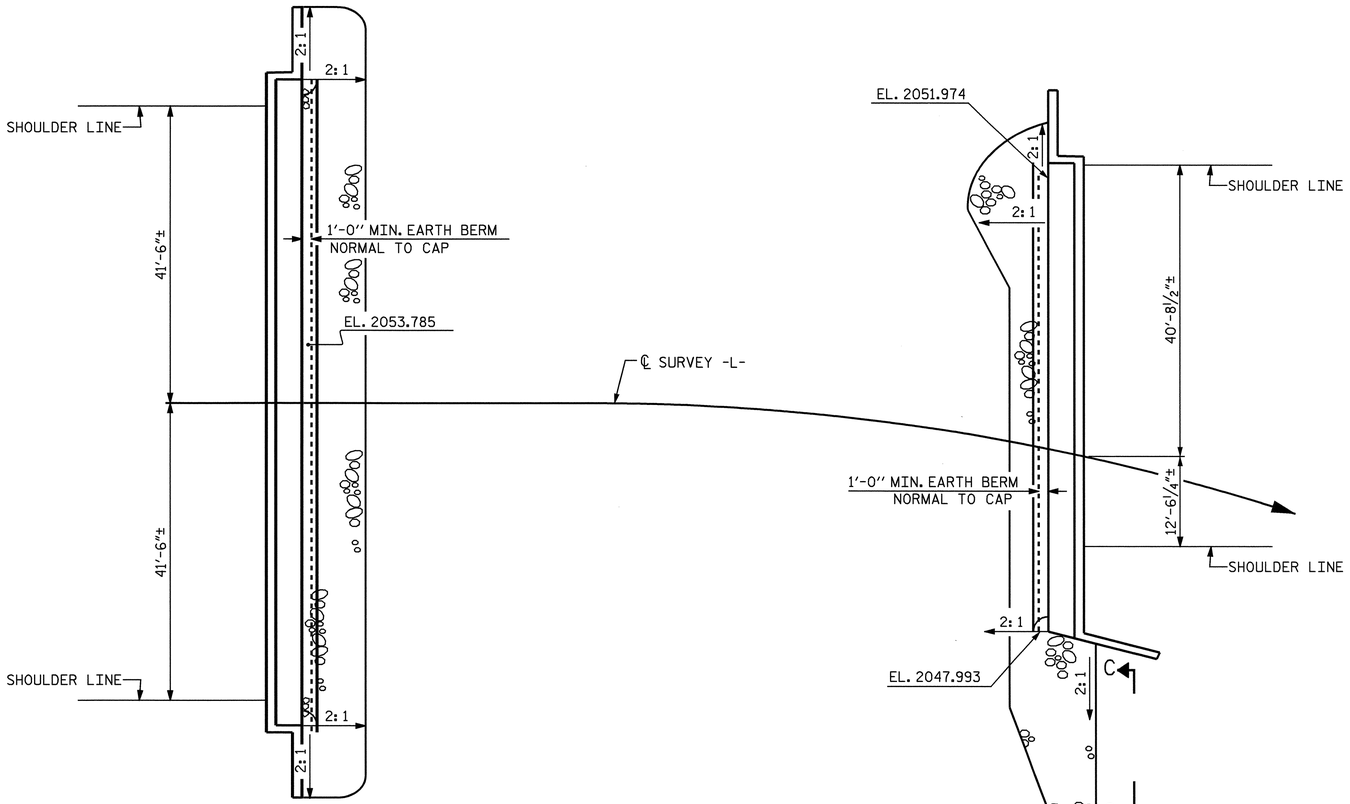


END BENT 1

END BENT 2

## PLAN OF RIP RAP

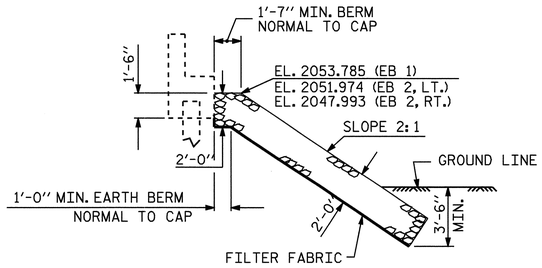


℄ SECTION
BERM RIP RAPPED

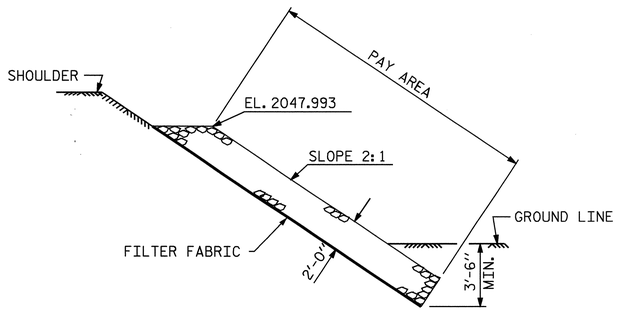


SECTION C-C

## ESTIMATED QUANTITIES

| BRIDGE @ STA. 11+97.50 -L- | PLAIN RIP RAP CLASS II | FILTER FABRIC FOR DRAINAGE |
|---|---|---|
| | TONS | SQUARE YARDS |
| END BENT 1 | 196 | 218 |
| END BENT 2 | 333 | 370 |

PROJECT NO. B-2848
YANCEY/MITCHELL COUNTY
STATION: 11+97.50 -L-

NORTH CAROLINA PROFESSIONAL SEAL 22005 ENGINEER H. KEITH PASCHAL

11/29/06

STATE OF NORTH CAROLINA
DEPARTMENT OF TRANSPORTATION
RALEIGH

# RIP RAP DETAILS

| ASSEMBLED BY : K. McCAULEY | DATE : 5/18/04 |
|---|---|
| CHECKED BY : A. M. KEETER | DATE : 10/19/04 |
| DRAWN BY : FCJ 2/88 | REV. 7/17/98 REK/RWW |
| CHECKED BY : ARB 8/88 | REV. 8/16/99 RWW/LES |
| | REV. 10/17/00 RWW/LES |

| REVISIONS | | | | | | SHEET NO. |
|---|---|---|---|---|---|---|
| NO. | BY: | DATE: | NO. | BY: | DATE: | S-48 |
| 1 | | | 3 | | | TOTAL SHEETS |
| 2 | | | 4 | | | 91 |

31-AUG-2006 12:28
R:\STRUCTØ1\ameadows\FINALPØ1\B2C1E6ØØ.DGN
ameadows

STD. NO. RR2

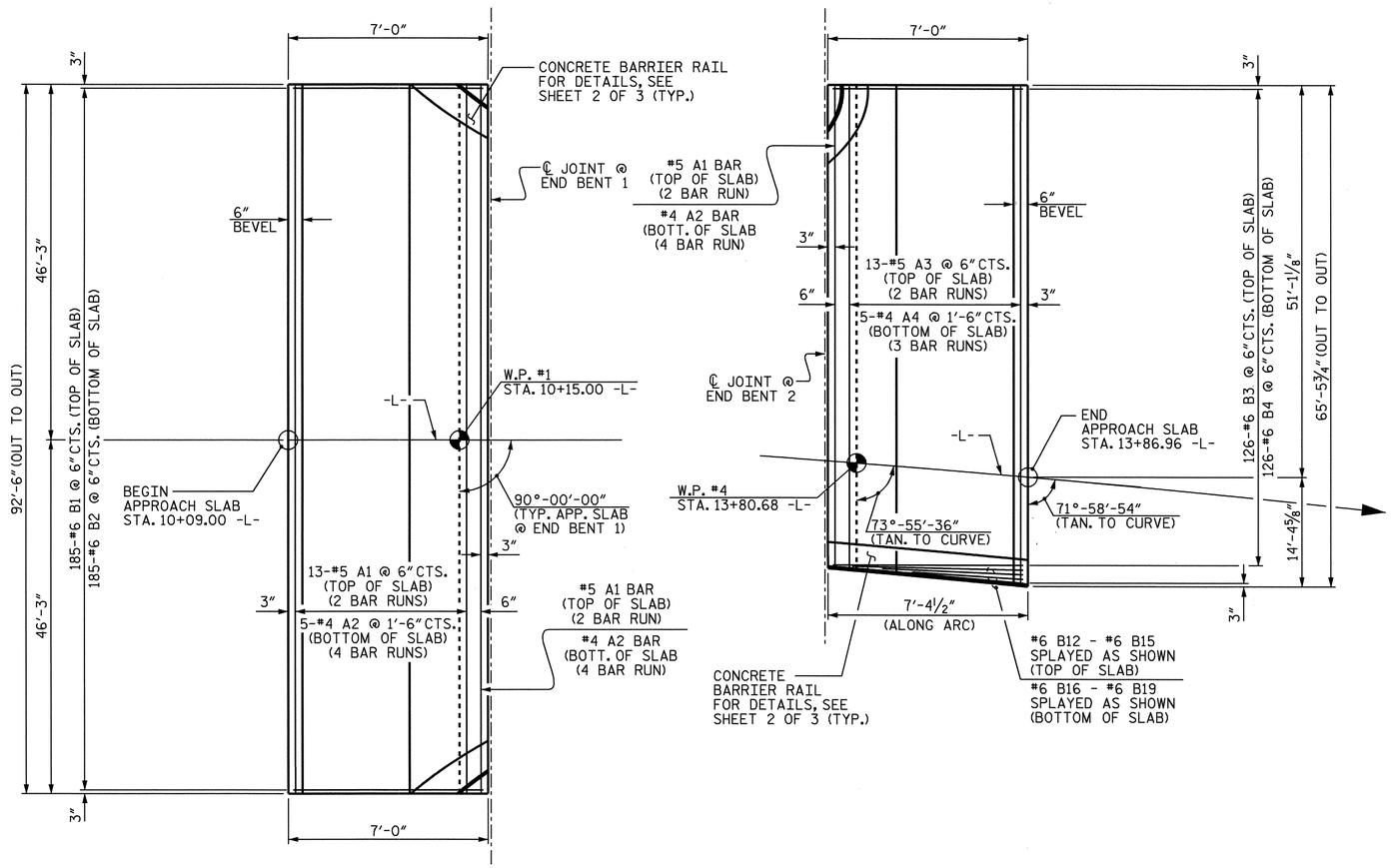


## PLAN OF APPROACH SLAB @ END BENT 1

## PLAN OF APPROACH SLAB @ END BENT 2

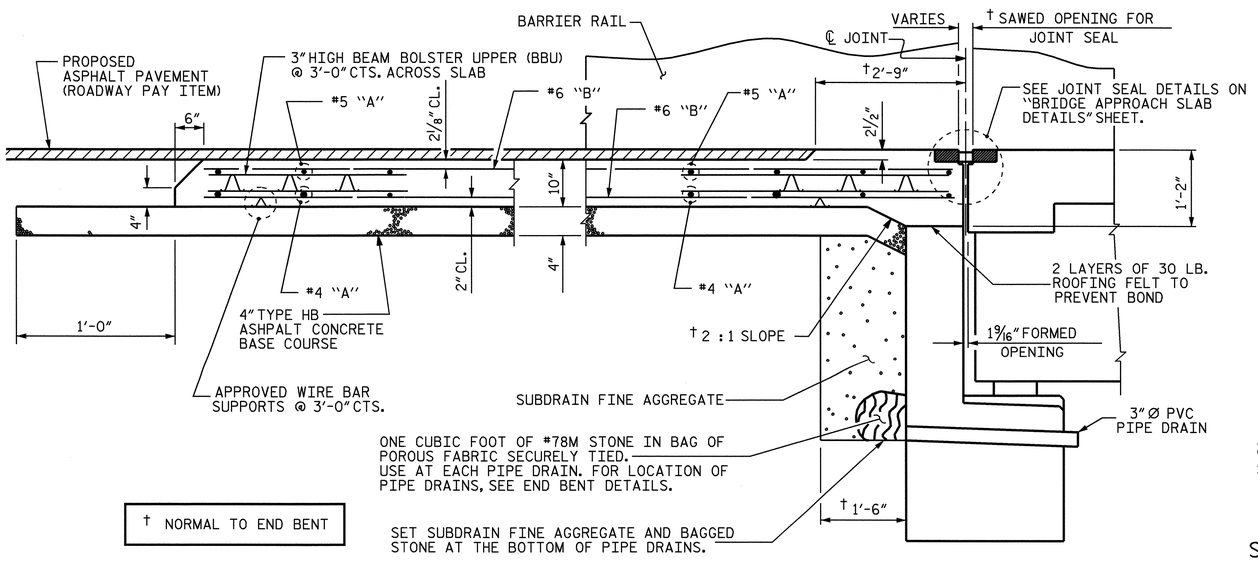


† NORMAL TO END BENT

## SECTION THRU SLAB

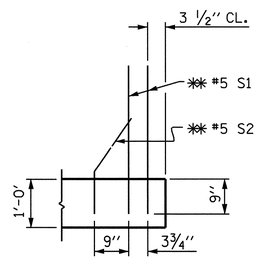


SECTION THRU SLAB
** ADHESIVELY ANCHORED

## NOTES

THE COST OF THE BARRIER RAIL ON THE APPROACH SLAB SHALL BE INCLUDED IN THE LUMP SUM CONTRACT PRICE BID FOR BRIDGE APPROACH SLABS.

APPROACH SLAB SHALL NOT BE CONSTRUCTED PRIOR TO COMPLETION OF THE BRIDGE DECK.

SUBDRAIN FINE AGGREGATE IS TO BE CONTINUOUS ALONG FILL FACE OF BACKWALL AND END BENT FROM OUTSIDE EDGE TO OUTSIDE EDGE OF APPROACH SLAB.

AREA BETWEEN THE WINGWALL AND APPROACH SLAB SHALL BE GRADED TO DRAIN THE WATER AWAY FROM THE FILL FACE OF THE BRIDGE AND SHALL BE PAVED. SEE ROADWAY PLANS.

THE 6" COMP. A.B.C. SHALL EXTEND 10'-0" BEYOND THE END OF THE APPROACH SLAB AND 1'-0" OUTSIDE OF EACH EDGE OF SLAB.

THE CONTRACTOR MAY USE 4" TYPE B-25.0B ASPHALT CONCRETE BASE COURSE IN LIEU OF 6" COMP. A.B.C. IF THIS OPTION IS USED, THE BASE COURSE SHALL EXTEND 1'-0" BEYOND THE END OF THE APPROACH SLAB AND THE WIDTH SHALL BE THE SAME AS THAT OF THE APPROACH SLAB.

THE CONTRACTOR MAY USE 5" CLASS "A" CONCRETE BASE IN LIEU OF 6" COMP. A.B.C. IF THIS OPTION IS USED, THE CONCRETE BASE SHALL EXTEND 1'-0" BEYOND THE END OF THE APPROACH SLAB AND THE WIDTH SHALL BE THE SAME AS THAT OF THE APPROACH SLAB. THE CONCRETE SHALL BE FINISHED TO A SMOOTH SURFACE AND A LAYER OF 30 LB ROOFING FELT SHALL BE PLACED BETWEEN THE CONCRETE BASE AND THE APPROACH SLAB TO PREVENT BOND. THE APPROACH SLAB SHALL NOT BE CAST UNTIL THE CONCRETE BASE HAS REACHED AN AGE OF THREE CURING DAYS.

THE JOINT SHALL BE SAWED PRIOR TO THE CASTING OF THE BARRIER RAIL.

FOR EVAZOTE JOINT SEALS, SEE SPECIAL PROVISIONS.

THE NOMINAL UNCOMPRESSED SEAL WIDTH OF THE EVAZOTE JOINT SEAL SHALL BE 3 7/16".

FOR ELASTOMERIC CONCRETE, SEE SPECIAL PROVISIONS.

## BAR TYPES

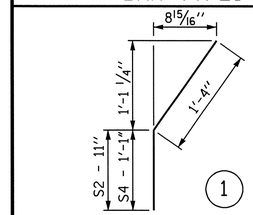


ALL BAR DIMENSIONS ARE OUT TO OUT

## BILL OF MATERIAL

### APPROACH SLAB AT EB #1

| BAR | NO. | SIZE | TYPE | LENGTH | WEIGHT |
|---|---|---|---|---|---|
| * A1 | 28 | #5 | STR | 47'-4" | 1382 |
| A2 | 24 | #4 | STR | 24'-5" | 391 |
| | | | | | |
| * B1 | 185 | #6 | STR | 6'-8" | 1852 |
| B2 | 185 | #6 | STR | 6'-8" | 1852 |
| * B5 | 2 | #5 | STR | 6'-4" | 13 |
| * B6 | 6 | #5 | STR | 4'-2" | 26 |
| * B7 | 8 | #5 | STR | 3'-5" | 29 |
| | | | | | |
| * S1 | 18 | #5 | STR | 3'-3" | 61 |
| * S2 | 12 | #5 | 1 | 2'-3" | 28 |

| | |
|---|---|
| REINFORCING STEEL | 2243 LBS. |
| * EPOXY COATED REINFORCING STEEL | 3391 LBS. |
| CLASS AA CONCRETE | 23.6 C.Y. |

### APPROACH SLAB AT EB #2

| BAR | NO. | SIZE | TYPE | LENGTH | WEIGHT |
|---|---|---|---|---|---|
| * A3 | 28 | #5 | STR | 33'-11" | 991 |
| A4 | 18 | #4 | STR | 22'-11" | 276 |
| | | | | | |
| * B3 | 130 | #6 | STR | 6'-8" | 1302 |
| B4 | 130 | #6 | STR | 6'-8" | 1302 |
| * B8 | 8 | #5 | STR | 7'-0" | 58 |
| * B9 | 1 | #5 | STR | 10'-5" | 11 |
| * B10 | 3 | #5 | STR | 7'-7" | 24 |
| * B11 | 4 | #5 | STR | 6'-6" | 27 |
| * B12 | 1 | #6 | STR | 6'-0" | 9 |
| * B13 | 1 | #6 | STR | 5'-0" | 8 |
| * B14 | 1 | #6 | STR | 4'-0" | 6 |
| * B15 | 1 | #6 | STR | 7'-0" | 11 |
| B16 | 1 | #6 | STR | 6'-0" | 9 |
| B17 | 1 | #6 | STR | 5'-0" | 8 |
| B18 | 1 | #6 | STR | 4'-0" | 6 |
| B19 | 1 | #6 | STR | 7'-0" | 11 |
| | | | | | |
| * S3 | 31 | #5 | STR | 3'-5" | 110 |
| * S4 | 16 | #5 | 1 | 2'-5" | 38 |

| | |
|---|---|
| REINFORCING STEEL | 1612 LBS. |
| * EPOXY COATED REINFORCING STEEL | 2595 LBS. |
| CLASS AA CONCRETE | 17.3 C.Y. |

## SPLICE LENGTH CHART

| | |
|---|---|
| #4 | 1'-9" |
| #5 | 2'-6" |

PROJECT NO. B-2848
YANCEY/MITCHELL COUNTY
STATION: 11+97.50 -L-

SHEET 1 OF 3

STATE OF NORTH CAROLINA
DEPARTMENT OF TRANSPORTATION
RALEIGH

STANDARD

BRIDGE APPROACH SLAB FOR FLEXIBLE PAVEMENT WITH BARRIER RAIL

NORTH CAROLINA PROFESSIONAL SEAL 22005 ENGINEER A. KEITH PASCHAL
11/29/06

| REVISIONS | | | | | | SHEET NO. |
|---|---|---|---|---|---|---|
| NO. | BY: | DATE: | NO. | BY: | DATE: | S-49 |
| 1 | | | 3 | | | TOTAL SHEETS |
| 2 | | | 4 | | | 91 |

STD. NO. BAS5

| | |
|---|---|
| ASSEMBLED BY : K. McCAULEY | DATE : 4/14/04 |
| CHECKED BY : A. M. KEETER | DATE : 10/22/04 |
| DRAWN BY : LES 8/01 | REV. 5/7/03R RWW/JTE |
| CHECKED BY : RDR 8/01 | REV. 5/1/06 TLA/GM |

06-OCT-2006 08:52
R:\STRUCTØ1\ameadows\FINALPØ1\B2848_Ø1.DGN
ameadows

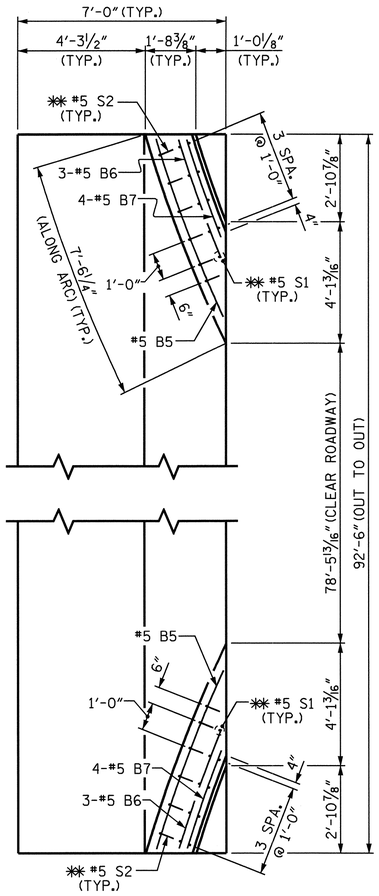


END BENT 1

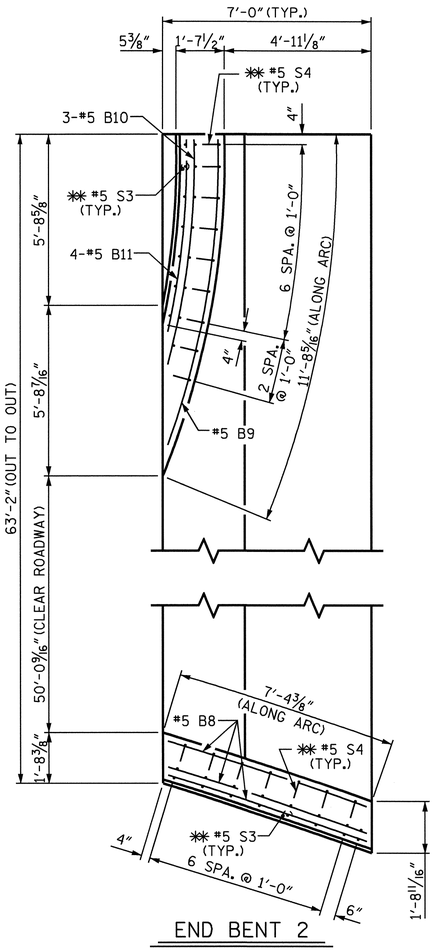


END BENT 2

## PLAN

BEGIN APPROACH SLAB SHOWN, END APPROACH SLAB SIMILAR

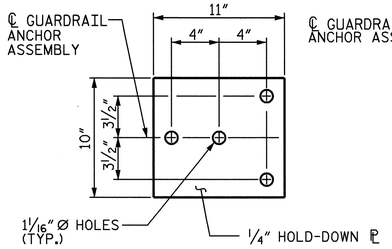


PLAN

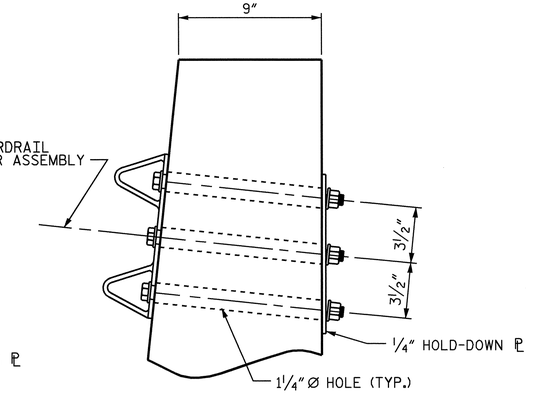


SECTION E-E

## GUARDRAIL ANCHOR ASSEMBLY DETAILS

### NOTES

THE GUARDRAIL ANCHOR ASSEMBLY SHALL CONSIST OF A ¼" HOLD DOWN PLATE AND 4 - ⅞" Ø BOLTS WITH NUTS AND WASHERS.

THE HOLD-DOWN PLATE SHALL CONFORM TO AASHTO M270 GRADE 36. AFTER FABRICATION, THE HOLD-DOWN PLATE SHALL BE HOT-DIP GALVANIZED IN ACCORDANCE WITH AASHTO M111.

BOLTS SHALL CONFORM TO THE REQUIREMENTS OF ASTM A307 AND NUTS SHALL CONFORM TO THE REQUIREMENTS OF AASHTO M291. BOLTS, NUTS AND WASHERS SHALL BE GALVANIZED. AT THE CONTRACTOR'S OPTION, STAINLESS STEEL BOLTS, NUTS AND WASHERS MAY BE USED AS AN ALTERNATE FOR THE ⅞" Ø GALVANIZED BOLTS, NUTS AND WASHERS. THEY SHALL CONFORM TO OR EXCEED THE MECHANICAL REQUIREMENTS OF ASTM A307. THE USE OF THIS ALTERNATE SHALL BE APPROVED BY THE ENGINEER.

AFTER INSTALLATION, THE EXPOSED THREAD OF THE BOLT SHALL BE BURRED WITH A SHARP POINTED TOOL.

THE COST OF THE GUARDRAIL ANCHOR ASSEMBLIES WITH BOLTS, NUTS AND WASHERS COMPLETE IN PLACE, SHALL BE INCLUDED IN THE LUMP SUM CONTRACT PRICE BID FOR BRIDGE APPROACH SLABS.

THE 1 ¼" Ø HOLES SHALL BE FORMED OR DRILLED WITH A CORE BIT. IMPACT TOOLS WILL NOT BE PERMITTED. ANY CONCRETE DAMAGED BY THIS WORK SHALL BE REPAIRED TO THE SATISFACTION OF THE ENGINEER.

THE #5 "S" BARS SHALL BE INSTALLED, WHERE NOTED ON THE PLANS, USING AN ADHESIVE ANCHORING SYSTEM AFTER SAWING THE JOINT. THE YIELD LOAD FOR THE #5 S1 AND #5 S3 BARS IS 18.6 KIPS. FIELD TESTING FOR THE ADHESIVE BONDING SYSTEM IS NOT REQUIRED.

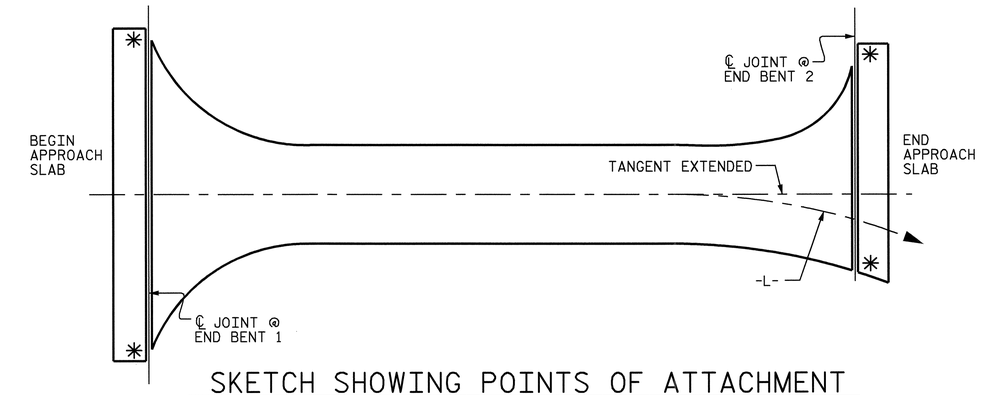


## SKETCH SHOWING POINTS OF ATTACHMENT

✱ INDICATES POINTS OF ATTACHMENT

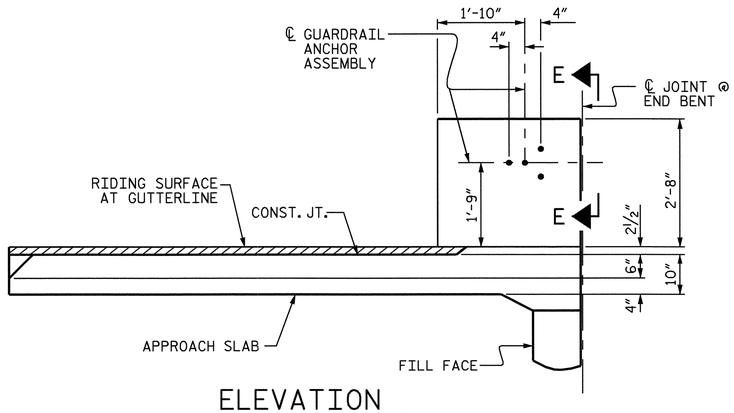


## ELEVATION

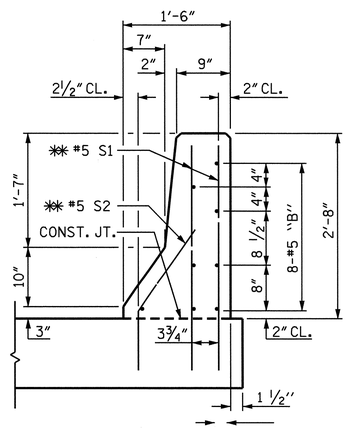


## SECTION THRU BARRIER RAIL @ END BENT 1

✱✱ ADHESIVELY ANCHORED

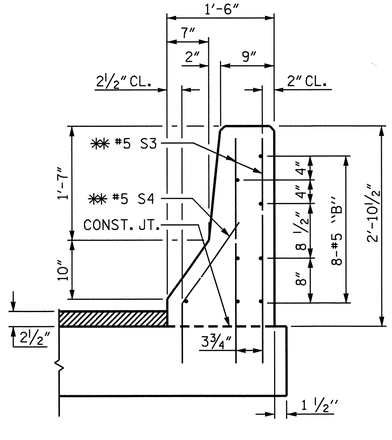


## SECTION THRU BARRIER RAIL @ END BENT 2

✱✱ ADHESIVELY ANCHORED

NORTH CAROLINA PROFESSIONAL SEAL 22005 ENGINEER A. KEITH PASCHAL

1/19/06

PROJECT NO. B-2848

YANCEY/MITCHELL COUNTY

STATION: 11+97.50 -L-

SHEET 2 OF 3

STATE OF NORTH CAROLINA
DEPARTMENT OF TRANSPORTATION
RALEIGH

STANDARD

BRIDGE APPROACH SLAB DETAILS FOR FLEXIBLE PAVEMENT WITH BARRIER RAIL

| REVISIONS | | | | | | SHEET NO. |
|---|---|---|---|---|---|---|
| NO. | BY: | DATE: | NO. | BY: | DATE: | S-50 |
| 1 | | | 3 | | | TOTAL SHEETS |
| 2 | | | 4 | | | 91 |

STD. NO. BAS6

| | |
|---|---|
| ASSEMBLED BY : K. McCAULEY | DATE : 1/19/05 |
| CHECKED BY : A. K. PASCHAL | DATE : 1/22/05 |
| DRAWN BY : LES 8/01 | REV. 5/7/03R RWW/JTE |
| CHECKED BY : RDR 8/01 | |

31-AUG-2006 12:27
R:\STRUCTØ1\ameadows\FINALPØ1\B2848_Ø1.DGN
ameadows

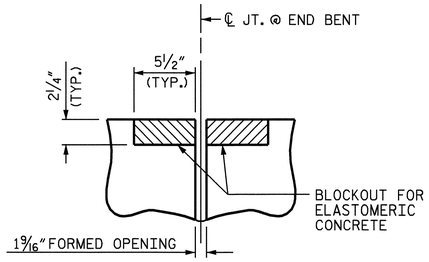


SECTION C-C

EVAZOTE JOINT SEAL
(PRE-SAWED ELASTOMERIC CONCRETE DIMENSIONS)

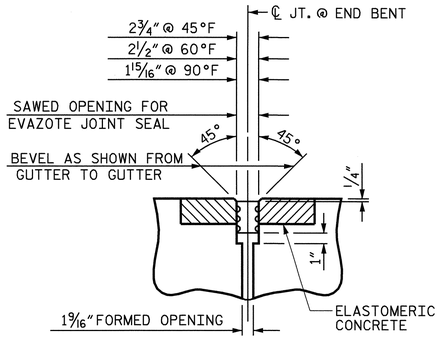


SECTION C-C

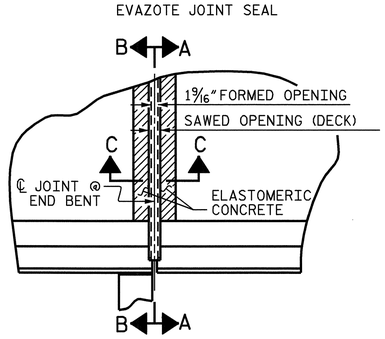


PLAN

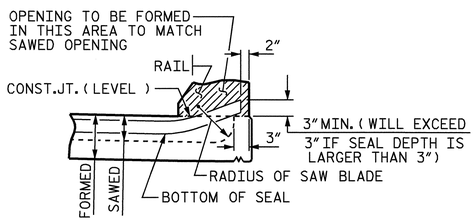


SECTION A-A

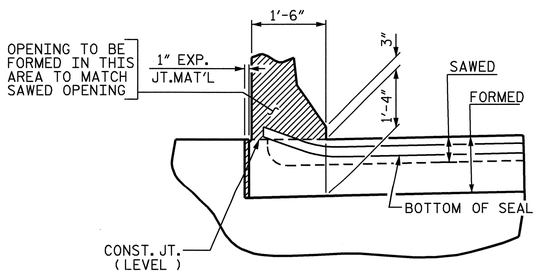


SECTION B-B

## JOINT SEAL DETAILS @ END BENT

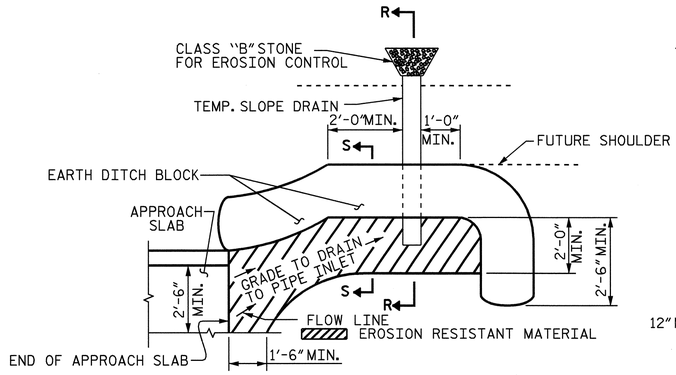


NOTE: IMMEDIATELY AFTER THE CONSTRUCTION OF THE APPROACH SLAB, THE CONTRACTOR SHALL PROVIDE TEMPORARY BERM AND SLOPE DRAIN. CONTRACTOR SHALL GRADE TO PIPE INLET AND PROVIDE EROSION RESISTANT MATERIAL AS SHOWN. THE EROSION RESISTANT MATERIAL SHALL BE EITHER 1) ASPHALT PLANT MIX, TYPE 1 OR TYPE 2, MIN. 2" DEPTH, 2) EROSION CONTROL MAT, OR 3) CONCRETE, AS DIRECTED BY THE ENGINEER. THE SLOPE DRAIN SHALL CONSIST OF A NON-PERFORATED TEMPORARY DRAINAGE PIPE, 12 INCHES IN DIAMETER.

PLAN VIEW

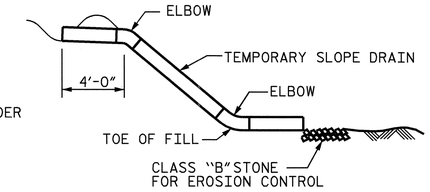


SECTION R-R

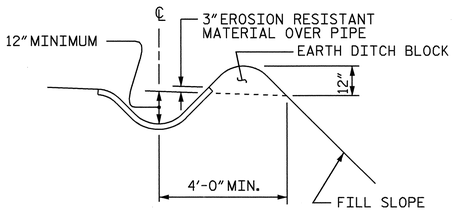


SECTION S-S

## TEMPORARY BERM AND SLOPE DRAIN DETAILS

(TO BE USED WHEN SHOULDER BERM GUTTER IS REQUIRED)

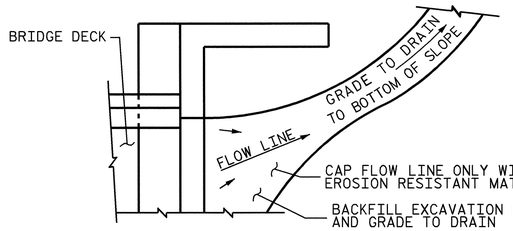


NOTE: IF THE APPROACH SLAB IS NOT CONSTRUCTED IMMEDIATELY AFTER THE BACKFILLING OF THE END BENT EXCAVATION, GRADE TO DRAIN TO THE BOTTOM OF THE SLOPE AND PROVIDE EROSION RESISTANT MATERIAL, SUCH AS FIBERGLASS ROVING OR AS DIRECTED BY THE ENGINEER TO PREVENT SOIL EROSION AND TO PROTECT THE AREA ADJACENT TO THE STRUCTURE. THE CONTRACTOR WILL BE REQUIRED TO REMOVE THESE MATERIALS PRIOR TO CONSTRUCTION OF THE APPROACH SLAB.

TEMPORARY DRAINAGE DETAIL

| ELASTOMERIC CONCRETE | |
|---|---|
| END BENT NO. | ELASTOMERIC CONCRETE * (CU. FT.) |
| 1 | 13.5 |
| 2 | 8.6 |
| TOTAL | 22.1 |

* BASED ON THE MINIMUM BLOCKOUT SHOWN.

11/29/06

PROJECT NO. B-2848
YANCEY/MITCHELL COUNTY
STATION: 11+97.50 -L-

SHEET 3 OF 3

STATE OF NORTH CAROLINA
DEPARTMENT OF TRANSPORTATION
RALEIGH

STANDARD

# BRIDGE APPROACH SLAB DETAILS

1988

| REVISIONS | | | | | | SHEET NO. |
|---|---|---|---|---|---|---|
| NO. | BY: | DATE: | NO. | BY: | DATE: | S-5I |
| 1 | | | 3 | | | TOTAL SHEETS |
| 2 | | | 4 | | | 91 |

STD. NO. BAS10

| | | | |
|---|---|---|---|
| ASSEMBLED BY : K. McCAULEY | | DATE : 4/14/04 | |
| CHECKED BY : A. M. KEETER | | DATE : 10/22/04 | |
| DRAWN BY : FCJ 11/88 | REV. 8/16/99 | MAB/LES | |
| CHECKED BY : ARB 11/88 | REV. 10/17/00 | RWW/LES | |
| | REV. 5/7/03 | RWW/JTE | |

06-OCT-2006 08:53
R:\STRUCTØ1\ameadows\FINALPØ1\B2848_Ø1.DGN
ameadows

F.A. PROJECT NO. : BRSTP-197 (1)

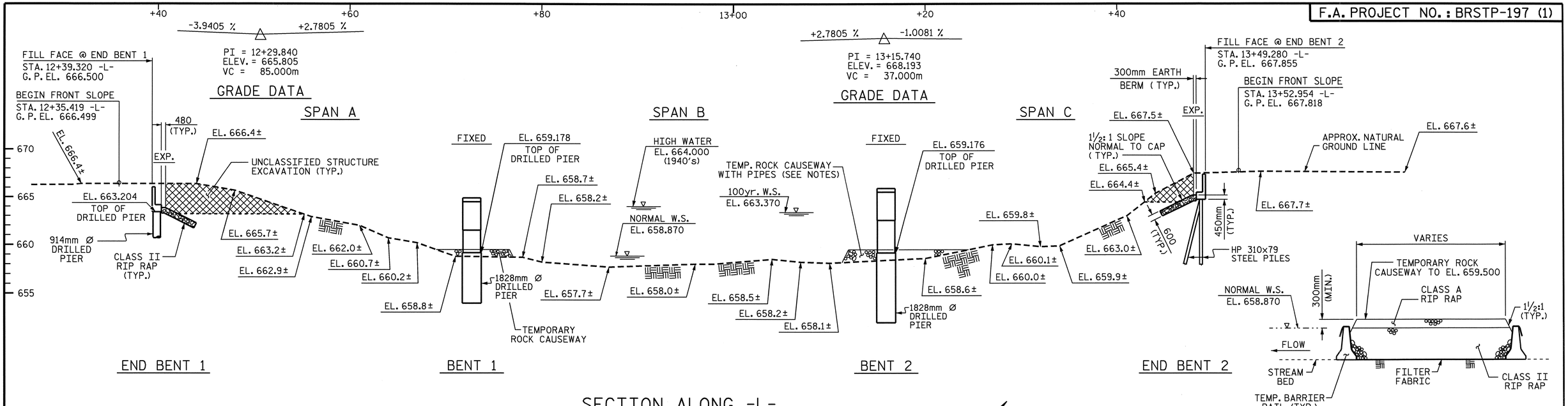


## SECTION ALONG -L-

SECTION TAKEN AT RIGHT ANGLES TO BENTS AND END BENTS

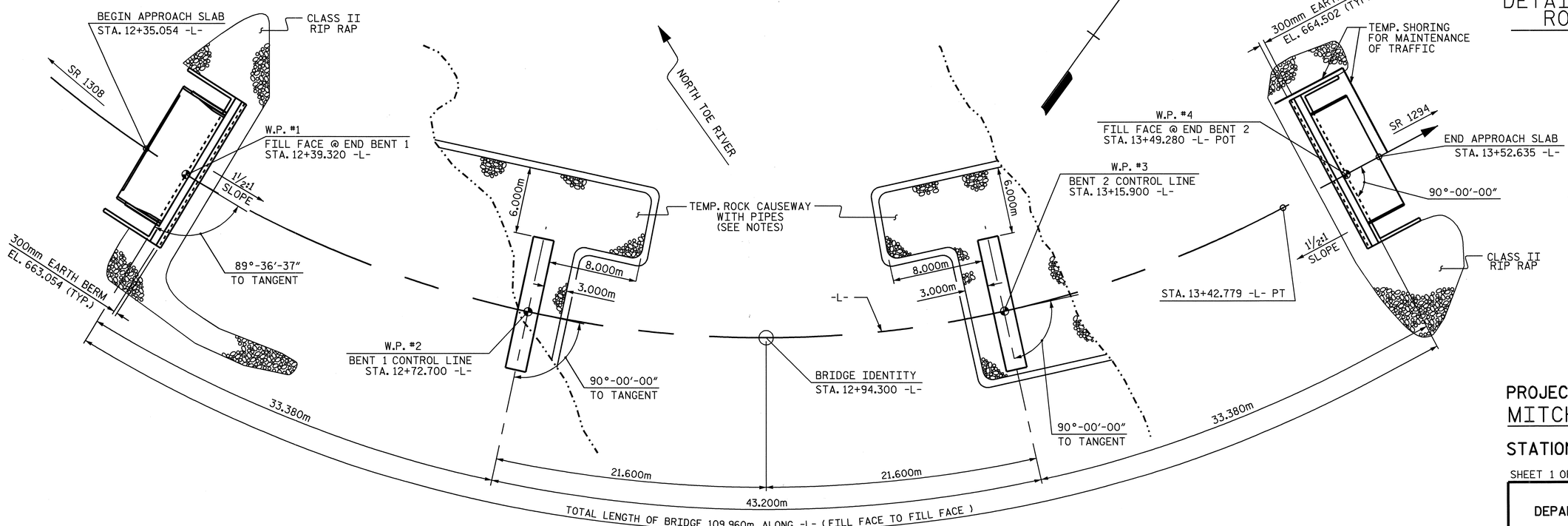


## PLAN

(PILES NOT SHOWN FOR CLARITY)

## DETAIL OF TEMPORARY ROCK CAUSEWAY




## HORIZONTAL CURVE DATA

PI STA 12+85.885 -L-
Δ = 93°-25'-10.7" (LT)
L = 163.048m
T = 106.154m
R = 100.000m

NORTH CAROLINA PROFESSIONAL SEAL 14091 ENGINEER BRUCE CHARLES HUNT
10/18/06

NORTH CAROLINA PROFESSIONAL SEAL 20211 ENGINEER THOMAS G. PAYNE
10/18/06

METRIC

PROJECT NO. B-1443
MITCHELL/YANCEY COUNTY
STATION 12+94.300 -L-

SHEET 1 OF 5 REPLACES BRIDGE No. 61

STATE OF NORTH CAROLINA
DEPARTMENT OF TRANSPORTATION
RALEIGH

# GENERAL DRAWING
FOR BRIDGE ON NC 197
OVER NORTH TOE RIVER
BETWEEN SR 1308 AND SR 1294

| REVISIONS | | | | | | SHEET NO. |
|---|---|---|---|---|---|---|
| NO. | BY: | DATE: | NO. | BY: | DATE: | S-52 |
| 1 | | | 3 | | | TOTAL SHEETS |
| 2 | | | 4 | | | 91 |

DRAWN BY : S.H. SOCKWELL DATE : 7/27/04
CHECKED BY : J.P. ADAMS DATE : 9/01/04

18-OCT-2006 11:48
F:\Structures\b1443\Final\B1443_sd_gd_01.dgn

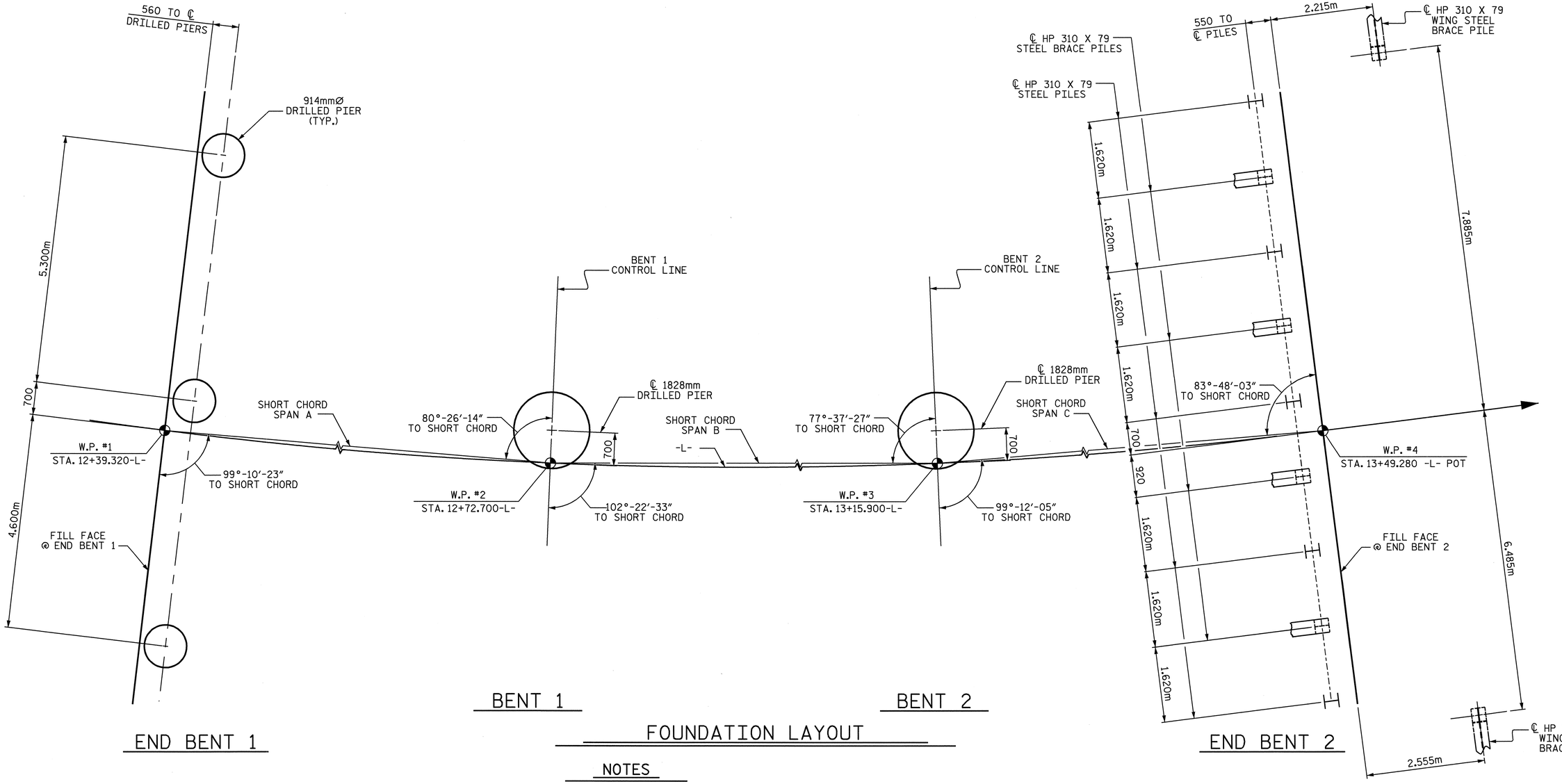


END BENT 1 — BENT 1 — BENT 2 — END BENT 2

# FOUNDATION LAYOUT

## NOTES

DIMENSIONS LOCATING PILES ARE SHOWN TO THE PILE CENTERLINE.

HP 310 X 79 STEEL BRACE PILES AT END BENT NO. 2 ARE BATTERED 250 TO 1000.

DRILLED PIERS AT END BENT No. 1 AND BENTS No. 1 AND No. 2 ARE DESIGNED FOR BOTH SKIN FRICTION AND END BEARING. CHECK FIELD CONDITIONS FOR THE REQUIRED END BEARING CAPACITY OF 2900 kPa.

DRILLED PIERS FOR END BENT No. 1 ARE DESIGNED FOR AN APPLIED LOAD OF 1572 kN EACH AT THE TOP OF THE COLUMN.

DRILLED PIERS FOR BENTS No.1 AND No.2 ARE DESIGNED FOR AN APPLIED LOAD OF 6400 kN EACH AT THE TOP OF THE COLUMN.

PERMANENT STEEL CASING IS REQUIRED FOR DRILLED PIERS AT BENT No. 1 AND No. 2. DO NOT EXTEND BELOW ELEVATION 658.000 AND 656.000, RESPECTIVELY WITHOUT APPROVAL FROM THE ENGINEER.

PERMANENT STEEL CASING IS NOT REQUIRED FOR DRILLED PIERS AT END BENT No. 1.

FOR PERMANENT STEEL CASING, SEE DRILLED PIERS SPECIAL PROVISION.

DRILLED PIERS AT END BENT No. 1 MUST EXTEND TO AN ELEVATION NO HIGHER THAN 658.500 LEFT AND 661.000 CENTER AND RIGHT, SATISFY THE REQUIRED END BEARING CAPACITY, AND HAVE A MINIMUM PENETRATION OF 2.000m INTO ROCK AS DEFINED BY THE DRILLED PIERS SPECIAL PROVISION.

DRILLED PIERS AT BENT No. 1 MUST EXTEND TO AN ELEVATION NO HIGHER THAN 654.000, SATISFY THE REQUIRED END BEARING CAPACITY, AND HAVE A MINIMUM PENETRATION OF 4.000m INTO ROCK AS DEFINED BY THE DRILLED PIERS SPECIAL PROVISION.

DRILLED PIERS AT BENT No. 2 MUST EXTEND TO AN ELEVATION NO HIGHER THAN 652.000, SATISFY THE REQUIRED END BEARING CAPACITY, AND HAVE A MINIMUM PENETRATION OF 4.000m INTO ROCK AS DEFINED BY THE DRILLED PIERS SPECIAL PROVISION.

THE SCOUR CRITICAL ELEVATIONS FOR BENTS No. 1 AND No. 2 ARE 657.000 AND 655.000, RESPECTIVELY. BRIDGE MAINTENANCE USES SCOUR CRITICAL ELEVATIONS TO MONITOR POSSIBLE SCOUR PROBLEMS DURING THE LIFE OF THE STRUCTURE.

FOR DRILLED PIERS, SEE DRILLED PIERS SPECIAL PROVISIONS.

SPT TESTING IS NOT REQUIRED TO DETERMINE THE END BEARING CAPACITY OF THE DRILLED PIERS AT END BENT No. 1 AND BENTS No. 1 AND No. 2.

DO NOT USE SLURRY CONSTRUCTION FOR THIS PROJECT.

SID INSPECTIONS MAY BE REQUIRED TO INSPECT THE BOTTOM CLEANLINESS OF THE DRILLED PIERS.

THE ENGINEER WILL DETERMINE THE NEED FOR SID INSPECTIONS. SEE DRILED PIERS SPECIAL PROVISION.

CSL TUBES ARE REQUIRED AND CSL TESTING MAY BE REQUIRED FOR THE DRILLED PIERS. THE ENGINEER WILL DETERMINE THE NEED FOR CSL TESTING. SEE CROSS HOLE SONIC LOGGING SPECIAL PROVISION.

DRIVE PILES AT END BENT No. 2 TO A MINIMUM BEARING CAPACITY OF 450 kN EACH.

STEEL PILE POINTS ARE REQUIRED FOR PILES AT END BENT No. 2.

WHEN DRIVING PILES, DO NOT EXCEED THE MAXIMUM BLOW COUNT.

NORTH CAROLINA PROFESSIONAL SEAL 20211 ENGINEER THOMAS G. PAYNE 10/18/06

DRAWN BY : S.H. SOCKWELL DATE : 7/27/04
CHECKED BY : J.P. ADAMS DATE : 9/01/04

18-OCT-2006 11:48
F:\Structures\bl443\Final\Bl443_sd_gd_01.dgn
klayne

PROJECT NO. B-1443
MITCHELL/YANCEY COUNTY
STATION: 12+94.300-L-

SHEET 2 OF 5

STATE OF NORTH CAROLINA
DEPARTMENT OF TRANSPORTATION
RALEIGH

GENERAL DRAWING
FOR BRIDGE ON NC 197
OVER NORTH TOE RIVER
BETWEEN SR 1308 AND SR 1294

| REVISIONS | | | | | | SHEET NO. |
|---|---|---|---|---|---|---|
| NO. | BY: | DATE: | NO. | BY: | DATE: | S-53 |
| 1 | | | 3 | | | TOTAL SHEETS |
| 2 | | | 4 | | | 91 |

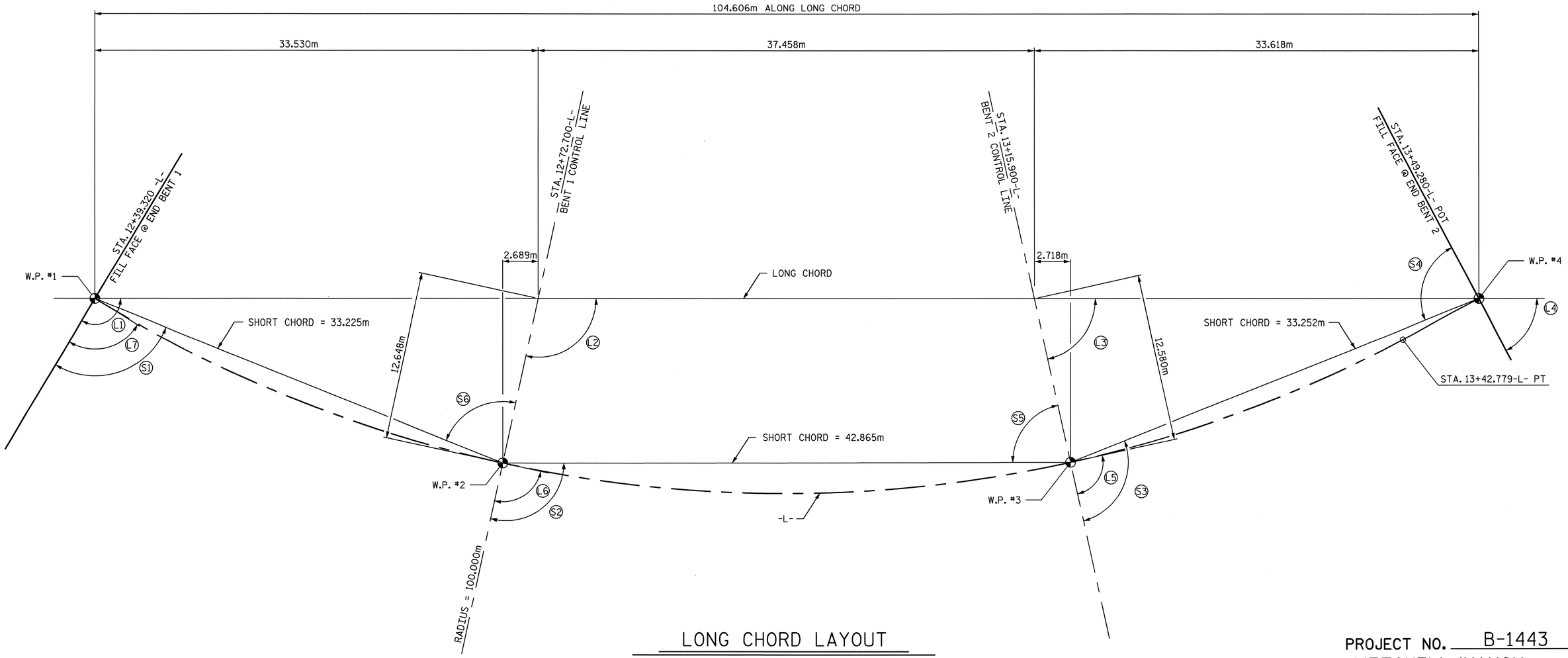


## LONG CHORD LAYOUT

| ANGLES | | | |
|---|---|---|---|
| LONG CHORD | | SHORT CHORD | |
| L1 | 121°-00′-38″ | S1 | 99°-10′-23″ |
| L2 | 102°-16′-29″ | S2 | 102°-22′-33″ |
| L3 | 77°-31′-23″ | S3 | 99°-12′-05″ |
| L4 | 62°-07′-21″ | S4 | 83°-48′-03″ |
| | | S5 | 77°-37′-27″ |
| | | S6 | 80°-26′-14″ |
| L5 90°-00′-00″(TANGENT TO CURVE) | | | |
| L6 90°-00′-00″(TANGENT TO CURVE) | | | |
| L7 89°-36′-37″(TANGENT TO CURVE) | | | |

PROJECT NO. B-1443

MITCHELL/YANCY COUNTY

STATION: 12+94.300-L-

SHEET 3 OF 5

STATE OF NORTH CAROLINA
DEPARTMENT OF TRANSPORTATION
RALEIGH

GENERAL DRAWING
FOR BRIDGE ON NC 197
OVER NORTH TOE RIVER
BETWEEN SR 1308 AND SR 1294

NORTH CAROLINA PROFESSIONAL SEAL 20211 ENGINEER THOMAS G. PAYNE
10/18/06

| REVISIONS | | | | | | SHEET NO. |
|---|---|---|---|---|---|---|
| NO. | BY: | DATE: | NO. | BY: | DATE: | S-54 |
| 1 | | | 3 | | | TOTAL SHEETS |
| 2 | | | 4 | | | 91 |

DRAWN BY : S.H. SOCKWELL DATE : 7/27/04
CHECKED BY : J.P. ADAMS DATE : 9/01/04

18-OCT-2006 11:48
F:\Structures\bl443\Final\Bl443_sd_gd_01.dgn
klayne

BL-6 12+50.957 -BL- IRON PIN WITH CAP ELEV. 665.982 NGVD 29

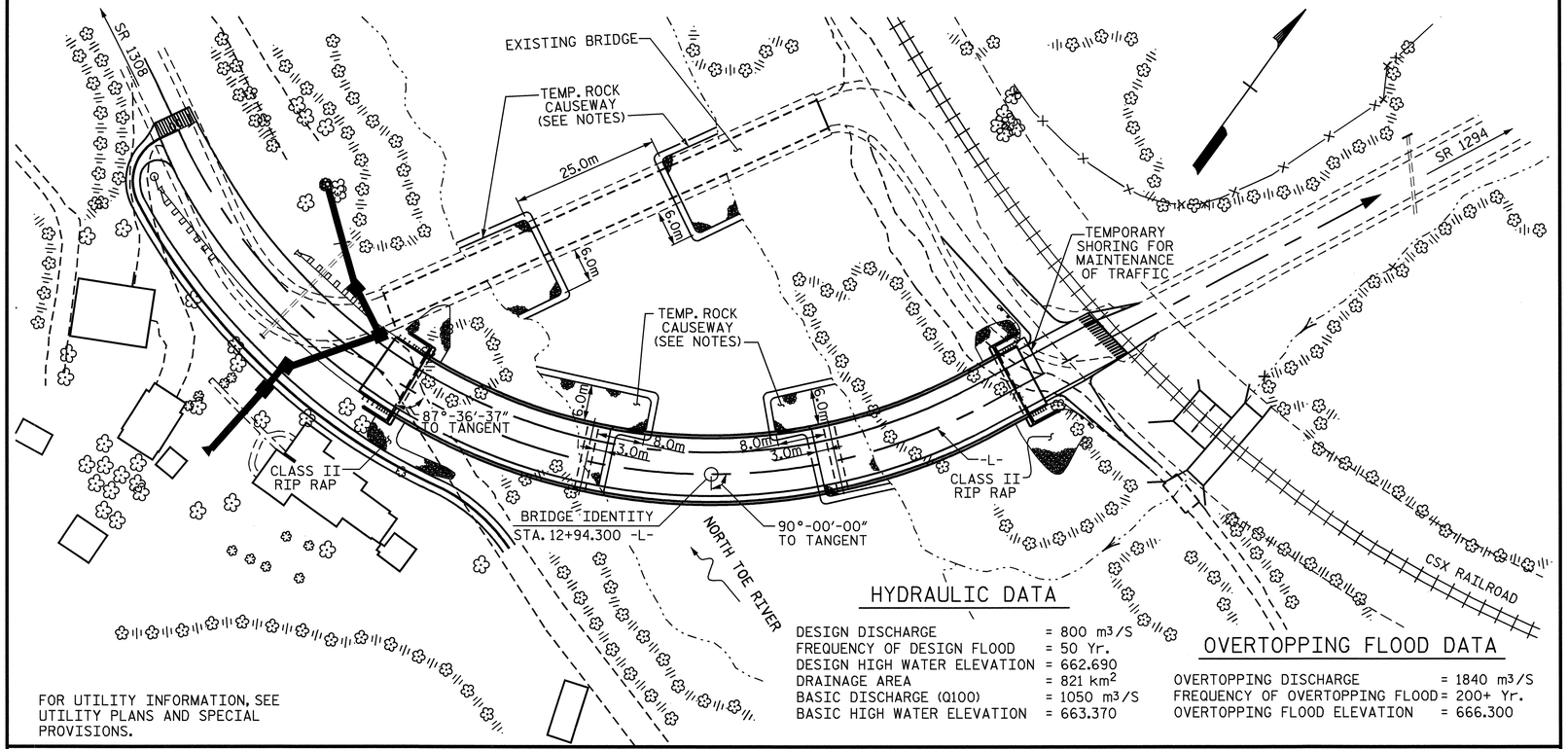


## HYDRAULIC DATA

| | |
|---|---|
| DESIGN DISCHARGE | = 800 $m^3/S$ |
| FREQUENCY OF DESIGN FLOOD | = 50 Yr. |
| DESIGN HIGH WATER ELEVATION | = 662.690 |
| DRAINAGE AREA | = 821 $km^2$ |
| BASIC DISCHARGE (Q100) | = 1050 $m^3/S$ |
| BASIC HIGH WATER ELEVATION | = 663.370 |

## OVERTOPPING FLOOD DATA

| | |
|---|---|
| OVERTOPPING DISCHARGE | = 1840 $m^3/S$ |
| FREQUENCY OF OVERTOPPING FLOOD | = 200+ Yr. |
| OVERTOPPING FLOOD ELEVATION | = 666.300 |

## LOCATION SKETCH

## NOTES

ALL DIMENSIONS ARE IN MILLIMETERS UNLESS OTHERWISE NOTED.

ALL ELEVATIONS ARE IN METERS.

ASSUMED LIVE LOAD = MS 18 OR ALTERNATE LOADING.

FOR OTHER DESIGN DATA AND GENERAL NOTES, SEE SHEET SNSM.

FOR EROSION CONTROL MEASURES SEE EROSION CONTROL PLANS.

THIS BRIDGE HAS BEEN DESIGNED BY THE STRENGTH DESIGN METHOD AS SPECIFIED IN AASHTO STANDARD SPECIFICATIONS.

ALL STRUCTURAL STEEL SHALL BE AASHTO M270 GRADE 345W AND PAINTED IN ACCORDANCE WITH SYSTEM 4 OF ARTICLE 442-7 OF THE STANDARD SPECIFICATIONS UNLESS OTHERWISE NOTED ON THE PLANS.

REMOVABLE FORMS MAY BE USED IN LIEU OF METAL STAY-IN-PLACE FORMS IN ACCORDANCE WITH ARTICLE 420-3 OF THE STANDARD SPECIFICATIONS.

AFTER SERVING AS A TEMPORARY STRUCTURE THE EXISTING STRUCTURE CONSISTING OF 2 REINFORCED CONCRETE APPROACH SPANS (4.572m EACH) AND 3 CONTINUOUS ARCH SPANS (23.622m, 25.908m, 23.622m) WITH A CLEAR ROADWAY WIDTH OF 15.600m ON CONCRETE ABUTMENTS & REINFORCED CONCRETE POST & WEB INTERIOR BENTS AND LOCATED DOWNSTREAM FROM PROPOSED STRUCTURE SHALL BE REMOVED. THE EXISTING BRIDGE IS PRESENTLY NOT POSTED FOR LOAD LIMIT. SHOULD THE STRUCTURAL INTEGRITY OF THE BRIDGE DETERIORATE DURING CONSTRUCTION OF THE PROPOSED STRUCTURE, A LOAD LIMIT MAY BE POSTED AND MAY BE REDUCED AS FOUND NECESSARY DURING THE LIFE OF THE PROJECT. SEE SPECIAL PROVISIONS FOR REMOVAL OF EXISTING STRUCTURE.

FOR LIMITS OF TEMPORARY SHORING FOR MAINTENANCE OF TRAFFIC, SEE TRAFFIC CONTROL PLANS. FOR PAY ITEM FOR TEMPORARY SHORING FOR MAINTENANCE OF TRAFFIC, SEE ROADWAY PLANS.

DURING THE GIRDER ERECTION PROCEDURE, THE CONTRACTOR IS RESPONSIBLE FOR PROVIDING TEMPORARY LATERAL BRACING AND OTHER MEANS OF SUPPORT, AS REQUIRED, TO ENSURE STABILITY OF THE GIRDERS AND MAINTAIN PLUMBING OF THE GIRDER WEBS.

FOR CRANE SAFETY, SEE SPECIAL PROVISIONS.

THE MATERIAL SHOWN IN THE CROSS-HATCHED AREA SHALL BE EXCAVATED FOR A DISTANCE OF 8.200m EACH SIDE OF CENTERLINE ROADWAY AS DIRECTED BY THE ENGINEER. THIS WORK WILL BE MEASURED AND PAID FOR AS UNCLASSIFIED STRUCTURE EXCAVATION.

THIS STRUCTURE HAS BEEN DESIGNED IN ACCORDANCE WITH HEC 18,"EVALUATING SCOUR AT BRIDGES", MAY, 2001.

THIS BRIDGE HAS BEEN DESIGNED IN ACCORDANCE WITH THE REQUIREMENTS OF THE AASHTO STANDARD SPECIFICATIONS FOR SEISMIC DESIGN OF HIGHWAY BRIDGES FOR SEISMIC PERFORMANCE CATEGORY B.

THE CONTRACTOR SHALL PROVIDE INDEPENDENT ASSURANCE SAMPLES OF REINFORCING STEEL AS FOLLOWS: FOR PROJECTS REQUIRING UP TO 360,000 kg OF REINFORCING STEEL, ONE 760mm SAMPLE OF EACH SIZE BAR USED, AND FOR PROJECTS REQUIRING OVER 360,000 kg OF REINFORCING STEEL, TWO 760mm SAMPLES OF EACH SIZE BAR USED. THE BARS FROM WHICH THE SAMPLES ARE TAKEN MUST THEN BE SPLICED WITH REPLACEMENT BARS OF THE SIZE AND LENGTH OF THE SAMPLE PLUS A MINIMUM LAP SPLICE OF THIRTY BAR DIAMETERS.

NEEDLE BEAMS WILL NOT BE ALLOWED UNLESS OTHERWISE CALLED FOR ON THE PLANS OR APPROVED BY THE ENGINEER.

FOR SUBMITTAL OF WORKING DRAWINGS, SEE SPECIAL PROVISIONS.

FOR FALSEWORK AND FORMWORK, SEE SPECIAL PROVISIONS.

THE CLASS AA CONCRETE IN THE BRIDGE DECK SHALL CONTAIN FLY ASH OR GROUND GRANULATED BLAST FURNACE SLAG AT THE SUBSTITUTION RATE SPECIFIED IN ARTICLE 1024-1 AND IN ACCORDANCE WITH ARTICLES 1024-5 AND 1024-6 OF THE STANDARD SPECIFICATIONS. NO PAYMENT WILL BE MADE FOR THIS SUBSTITUTION AS IT IS CONSIDERED INCIDENTAL TO THE COST OF THE REINFORCED CONCRETE DECK SLAB.

TWO 400mm CSP PIPES SHALL BE PLACED IN EACE TEMPORARY ROCK CAUSEWAY AS DIRECTED BY THE ENGINEER.

AT THE CONTRACTOR'S OPTION, AND UPON REMOVAL OF THE CAUSEWAYS, THE CLASS II RIP RAP USED IN THE CAUSEWAYS MAY BE PLACED AS RIP RAP SLOPE PROTECTION, SEE SPECIAL PROVISONS FOR CONSTRUCTION, MAINTENANCE AND REMOVAL OF TEMPORARY ACCESS..

FILTER FABRIC SHALL BE PLACED UNDER THE TEMPORARY ROCK CAUSEWAYS AND SHALL WRAP UP AND OVER THE TEMPORARY BARRIER RAIL SECTIONS.

TEMPORARY BARRIER RAIL SECTIONS SHALL BE USED TO CONTAIN THE TEMPORARY ROCK CAUSEWAYS AND REDUCE THEIR FOOTPRINT. THE COST OF THE TEMPORARY BARRIER RAIL SECTIONS IN THE TEMPORARY ROCK CAUSEWAYS AND THEIR PLACEMENT SHALL BE INCLUDED IN THE "CONSTRUCTION, MAINTENANCE, AND REMOVAL OF TEMPORARY ACCESS" PAY ITEM.

FOR METRIC STRUCTURAL STEEL, SEE SPECIAL PROVISIONS.

NORTH CAROLINA PROFESSIONAL SEAL 20211 ENGINEER THOMAS G. PAYNE
10/18/06

PROJECT NO. B-1443
MITCHELL/YANCEY COUNTY
STATION 12+94.300 -L-

SHEET 4 OF 5

STATE OF NORTH CAROLINA
DEPARTMENT OF TRANSPORTATION
RALEIGH

GENERAL DRAWING
FOR BRIDGE ON NC 197
OVER NORTH TOE RIVER
BETWEEN SR 1308 AND 1294

| REVISIONS | | | | | | SHEET NO. |
|---|---|---|---|---|---|---|
| NO. | BY: | DATE: | NO. | BY: | DATE: | S-55 |
| 1 | | | 3 | | | TOTAL SHEETS |
| 2 | | | 4 | | | 91 |

DRAWN BY : S.H. SOCKWELL DATE : 7/27/04
CHECKED BY : J.P. ADAMS DATE : 9/01/04

18-OCT-2006 11:48
F:\Structures\b1443\Final\B1443_sd_gd_01.dgn
klayne

## TOTAL BILL OF MATERIAL (METRIC UNITS)

| | CONSTRUCTION, MAINTENANCE, & REMOVAL OF TEMP. ACCESS | REMOVAL OF EXISTING STRUCTURE | 914mm DIA. DRILLED PIERS IN SOIL | 1828mm DIA. DRILLED PIERS IN SOIL | 914mm DIA. DRILLED PIERS NOT IN SOIL | 1828mm DIA. DRILLED PIERS NOT IN SOIL | PERMANENT STEEL CASING FOR 1828mm Ø DRILLED PIER | SID INSPECTION | CROSSHOLE SONIC LOGGING | UNCLASSIFIED STRUCTURE EXCAVATION | REINFORCED CONCRETE DECK SLAB | GROOVING BRIDGE FLOORS |
|---|---|---|---|---|---|---|---|---|---|---|---|---|
| | LUMP SUM | LUMP SUM | METERS | METERS | METERS | METERS | METERS | EACH | EACH | CU. METERS | SQ. METERS | SQ. METERS |
| SUPERSTRUCTURE | | | | | | | | | | | 1291.1 | 1186.8 |
| END BENT 1 | | | 3.1 | | 6.0 | | | | | 498 | | |
| BENT 1 | | | | 1.2 | | 4.0 | 1.2 | 1 | 1 | | | |
| BENT 2 | | | | 3.2 | | 4.0 | 3.2 | 1 | 1 | | | |
| END BENT 2 | | | | | | | | | | 126 | | |
| TOTAL | LUMP SUM | LUMP SUM | 3.1 | 4.4 | 6.0 | 8.0 | 4.4 | 2 | 2 | 624 | 1291.1 | 1186.8 |

| | CLASS A CONCRETE | BRIDGE APPROACH SLABS | REINFORCING STEEL | SPIRAL COLUMN REINFORCING STEEL | STRUCTURAL STEEL (APPROX.) | HP 310 X 79 STEEL PILES | | STEEL PILE POINTS | CONCRETE BARRIER RAIL | RIP RAP CLASS II (600mm THICK) | FILTER FABRIC FOR DRAINAGE | POT BEARINGS | EVAZOTE JOINT SEALS |
|---|---|---|---|---|---|---|---|---|---|---|---|---|---|
| | CU. METERS | LUMP SUM | kg | kg | kg | NO. | METERS | EACH | METERS | METRIC TONS | SQ. METERS | LUMP SUM | LUMP SUM |
| SUPERSTRUCTURE | | LUMP SUM | | | 290600 | | | | 217.2 | | | LUMP SUM | LUMP SUM |
| END BENT 1 | 30.9 | | 4805 | 268 | | | | | | 146 | 149 | | |
| BENT 1 | 39.2 | | 6130 | 500 | | | | | | | | | |
| BENT 2 | 41.5 | | 6674 | 689 | | | | | | | | | |
| END BENT 2 | 29.1 | | 2893 | | | 11 | 71.5 | 11 | | 148 | 151 | | |
| TOTAL | 140.7 | LUMP SUM | 20502 | 1457 | 290600 | 11 | 71.5 | 11 | 217.2 | 294 | 300 | LUMP SUM | LUMP SUM |

THE TOTAL BILL OF MATERIAL HAS BEEN CONVERTED TO ENGLISH FOR BIDDING PURPOSES.

## TOTAL BILL OF MATERIAL (ENGLISH UNITS)

| | CONSTRUCTION, MAINTENANCE, & REMOVAL OF TEMP. ACCESS | REMOVAL OF EXISTING STRUCTURE | 3'-0" DIA. DRILLED PIERS IN SOIL | 6'-0" DIA. DRILLED PIERS IN SOIL | 3'-0" DIA. DRILLED PIERS NOT IN SOIL | 6'-0" DIA. DRILLED PIERS NOT IN SOIL | PERMANENT STEEL CASING FOR 6'-0" Ø DRILLED PIER | SID INSPECTION | CROSSHOLE SONIC LOGGING | UNCLASSIFIED STRUCTURE EXCAVATION | REINFORCED CONCRETE DECK SLAB | GROOVING BRIDGE FLOORS |
|---|---|---|---|---|---|---|---|---|---|---|---|---|
| | LUMP SUM | LUMP SUM | LIN. FT. | LIN. FT. | LIN. FT. | LIN. FT. | LIN. FT. | EACH | EACH | CU. YDS. | SQ. FT. | SQ. FT. |
| SUPERSTRUCTURE | | | | | | | | | | | 13,897 | 12,775 |
| END BENT 1 | | | 10.17 | | 19.68 | | | | | 651 | | |
| BENT 1 | | | | 3.94 | | 13.12 | 3.94 | 1 | 1 | | | |
| BENT 2 | | | | 10.50 | | 13.12 | 10.50 | 1 | 1 | | | |
| END BENT 2 | | | | | | | | | | 165 | | |
| TOTAL | LUMP SUM | LUMP SUM | 10.17 | 14.44 | 19.68 | 26.24 | 14.44 | 2 | 2 | 816 | 13,897 | 12,775 |

| | CLASS A CONCRETE | BRIDGE APPROACH SLABS | REINFORCING STEEL | SPIRAL COLUMN REINFORCING STEEL | STRUCTURAL STEEL (APPROX.) | HP 12 X 53 STEEL PILES | | STEEL PILE POINTS | CONCRETE BARRIER RAIL | RIP RAP CLASS II (2'-0" THICK) | FILTER FABRIC FOR DRAINAGE | POT BEARINGS | EVAZOTE JOINT SEALS |
|---|---|---|---|---|---|---|---|---|---|---|---|---|---|
| | CU. YDS. | LUMP SUM | LBS. | LBS. | LBS. | NO. | LIN. FT. | EACH | LIN. FT. | TONS | SQ. YDS | LUMP SUM | LUMP SUM |
| SUPERSTRUCTURE | | LUMP SUM | | | 640,700 | | | | 712.60 | | | LUMP SUM | LUMP SUM |
| END BENT 1 | 40.4 | | 10,593 | 591 | | | | | | 161 | 178 | | |
| BENT 1 | 51.3 | | 13,514 | 1,102 | | | | | | | | | |
| BENT 2 | 54.3 | | 14,714 | 1,519 | | | | | | | | | |
| END BENT 2 | 38.1 | | 6,378 | | | 11 | 235 | 11 | | 163 | 181 | | |
| TOTAL | 184.1 | LUMP SUM | 45,199 | 3,212 | 640,700 | 11 | 235 | 11 | 712.60 | 324 | 359 | LUMP SUM | LUMP SUM |

NORTH CAROLINA PROFESSIONAL SEAL 20211 ENGINEER THOMAS G. PAYNE
10/18/06

PROJECT NO. B-1443
MITCHELL/YANCEY COUNTY
STATION 12+94.300 -L-

SHEET 5 OF 5

STATE OF NORTH CAROLINA
DEPARTMENT OF TRANSPORTATION
RALEIGH

# GENERAL DRAWING
FOR BRIDGE ON NC 197
OVER NORTH TOE RIVER
BETWEEN SR 1308 AND 1294

| REVISIONS | | | | | | SHEET NO. |
|---|---|---|---|---|---|---|
| NO. | BY: | DATE: | NO. | BY: | DATE: | S-56 |
| 1 | | | 3 | | | TOTAL SHEETS |
| 2 | | | 4 | | | 91 |

DRAWN BY : S.H. SOCKWELL DATE : 7/27/04
CHECKED BY : J.P. ADAMS DATE : 9/01/04

18-OCT-2006 11:48
F:\Structures\b1443\Final\B1443_sd_gd_01.dgn
klayne

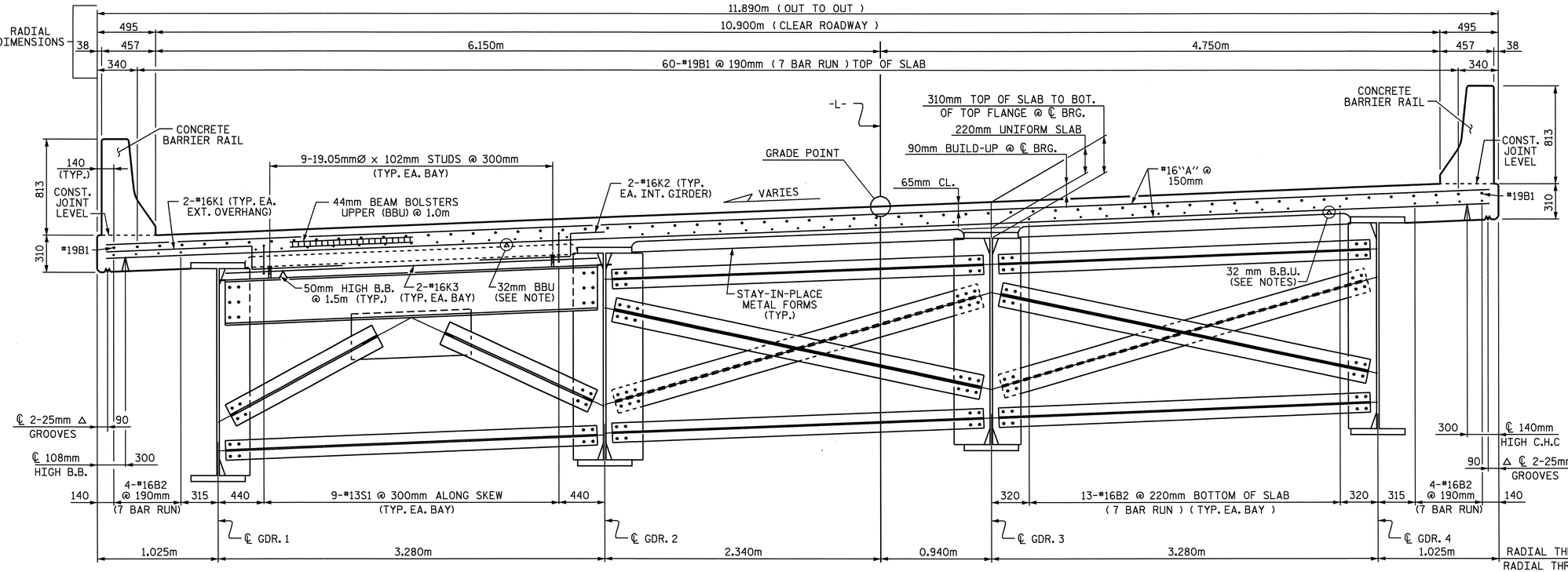


## NOTES

PROVIDE 32mm HIGH BEAM BOLSTERS UPPER AT 1.2m CTS. ATOP THE METAL STAY-IN-PLACE FORMS TO SUPPORT THE BOTTOM MAT OF 'A' BARS. WHEN USING REMOVABLE FORMS, PROVIDE CONTINUOUS HIGH CHAIRS FOR METAL DECK (C.H.C.M.) @ 1.2m CTS. WITH A HEIGHT TO SUPPORT THE BOTTOM MAT OF 'A' BARS A CLEAR DISTANCE OF 65mm ABOVE THE TOP OF THE REMOVABLE FORM.

METAL STAY-IN-PLACE FORMS SHALL NOT BE WELDED TO BEAM OR GIRDER FLANGES IN THE ZONES REQUIRING CHARPY V-NOTCH TEST. SEE STRUCTURAL STEEL DETAIL SHEETS.

PREVIOUSLY CAST CONCRETE IN A CONTINUOUS UNIT SHALL HAVE ATTAINED A MINIMUM COMPRESSIVE STRENGTH OF 20.7 MPa BEFORE ADDITIONAL CONCRETE IS CAST IN THE UNIT.

BARRIER RAIL IN A CONTINUOUS UNIT SHALL NOT BE CAST UNTIL ALL SLAB CONCRETE IN THE UNIT HAS BEEN CAST AND HAS REACHED A MINIMUM COMPRESSIVE STRENGTH OF 20.7 MPa.

STRUCTURAL STEEL ERECTION IN A CONTINUOUS UNIT SHALL BE COMPLETE BEFORE FALSEWORK OR FORMS ARE PLACED ON THE UNIT.

#16G BARS MAY BE SHIFTED SLIGHTLY AS NECESSARY TO CLEAR REINFORCING STEEL AND STIRRUPS.

THE CONTRACTOR MAY, WHEN NECESSARY, PROPOSE A SCHEME FOR AVOIDING INTERFERENCE BETWEEN METAL STAY-IN-PLACE FORM SUPPORTS OR FORMS AND GIRDER STIFFENER OR CONNECTOR PLATES. THE PROPOSAL SHALL BE INDICATED, AS APPROPRIATE, ON EITHER THE STEEL WORKING DRAWINGS OR THE METAL STAY-IN-PLACE FORM WORKING DRAWINGS.

THE CONTRACTOR SHALL ADJUST THE GIRDER BUILDUPS AS NECESSARY TO INCORPORATE A MAXIMUM PERMISSIBLE VARIATION IN POT BEARING DEPTH OF 13mm, SEE SPECIAL PROVISION FOR POT BEARINGS.

## TYPICAL END BENT DIAPHRAGM

## TYPICAL BENT DIAPHRAGM

## TYPICAL INTERMEDIATE DIAPHRAGM

## TYPICAL SECTION

CROSS-FRAME DIAPHRAGM TYPICAL FOR ALL BAYS

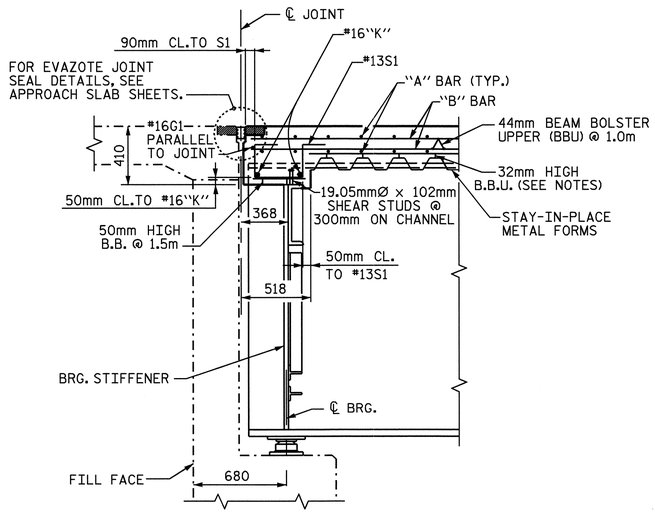


## SECTION A-A AT END BENT

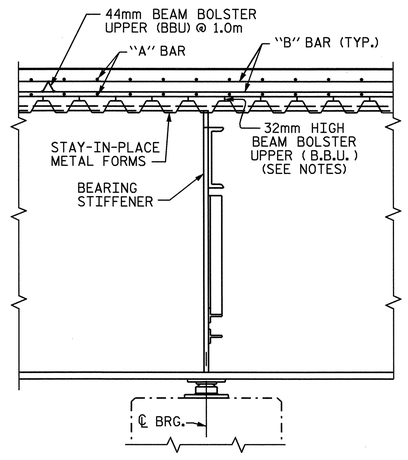


## SECTION B-B AT BENT

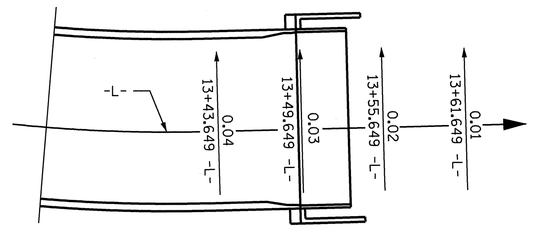


## SUPERELEVATION VARIATIONS

PROJECT NO. B-1443

MITCHELL/YANCEY COUNTY

STATION 12+94.300 -L-

STATE OF NORTH CAROLINA
DEPARTMENT OF TRANSPORTATION
RALEIGH

SUPERSTRUCTURE

TYPICAL SECTION

NORTH CAROLINA PROFESSIONAL SEAL 20211 ENGINEER THOMAS G. PAYNE
10/18/06

| REVISIONS | | | | | | SHEET NO. |
|---|---|---|---|---|---|---|
| NO. | BY: | DATE: | NO. | BY: | DATE: | S-57 |
| 1 | | | 3 | | | TOTAL SHEETS |
| 2 | | | 4 | | | 91 |

DRAWN BY : Keith D. Layne DATE : 2-7-03
CHECKED BY : S. H. SOCKWELL DATE : 1-12-04

18-OCT-2006 11:49
F:\Structures\b1443\Final\B1443_sd_ts_01.dgn
klayne

## NOTES

FOR BARRIER RAIL REINFORCING STEEL. SEE "CONCRETE BARRIER RAIL" SHEETS.

FOR SECTION A-A AND B-B, SEE "TYPICAL SECTION" SHEET.

#16 "A" BARS ARE TO BE PLACED (150mm MAX. CTS.) RADIALLY ALONG OUTSIDE RIGHT EDGE OF SUPERSTRUCTURE.

A TRANSVERSE CONSTRUCTION JOINT IS REQUIRED IN SPAN A & SPAN B, FOR LOCATION, SEE "LAYOUT FOR POURING SEQUENCE OF REINFORCED CONCRETE DECK SLAB" ON SUPERSTRUCTURE BILL OF MATERIAL SHEET.

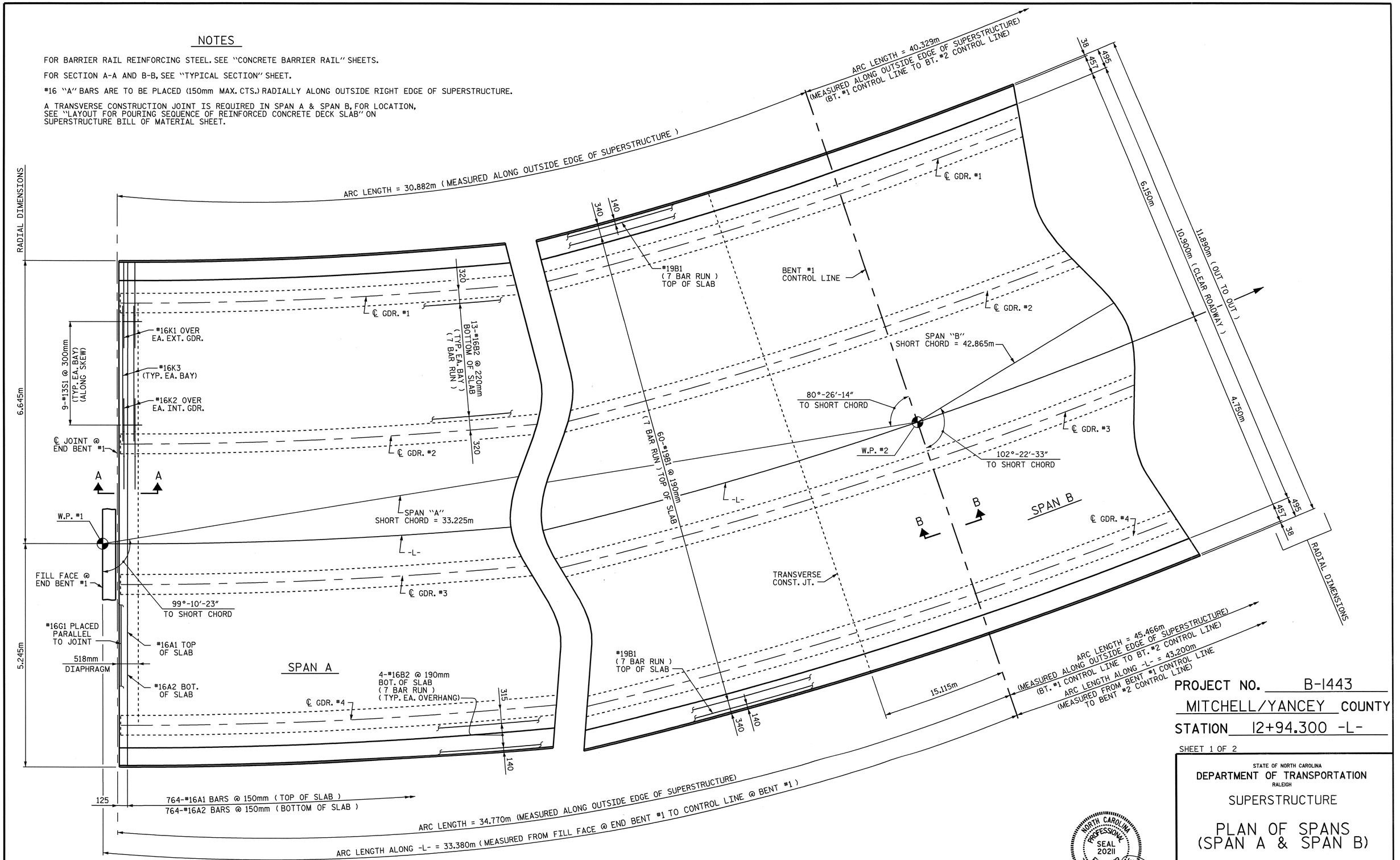


## PARTIAL PLAN OF SPAN A-B

PROJECT NO. B-1443

MITCHELL/YANCEY COUNTY

STATION 12+94.300 -L-

SHEET 1 OF 2

STATE OF NORTH CAROLINA
DEPARTMENT OF TRANSPORTATION
RALEIGH

SUPERSTRUCTURE

PLAN OF SPANS (SPAN A & SPAN B)

| REVISIONS | | | | | | SHEET NO. |
|---|---|---|---|---|---|---|
| NO. | BY: | DATE: | NO. | BY: | DATE: | S-58 |
| 1 | | | 3 | | | TOTAL SHEETS |
| 2 | | | 4 | | | 91 |

NORTH CAROLINA PROFESSIONAL SEAL 20211 ENGINEER THOMAS G. PAYNE
10/4/06

DRAWN BY : Keith D. Layne DATE : 2-13-03
CHECKED BY : S. H. SOCKWELL DATE : 1-12-04

18-OCT-2006 15:18
R:\Structures\b1443\Final\B1443_sd_ps_01.dgn
tpayne

## NOTES

FOR BARRIER RAIL REINFORCING STEEL. SEE "CONCRETE BARRIER RAIL" SHEETS.

FOR SECTION A-A AND B-B, SEE "TYPICAL SECTION" SHEET

#16 "A" BARS ARE TO BE PLACED (150mm MAX. CTS.) RADIALLY ALONG OUTSIDE RIGHT EDGE OF SUPERSTRUCTURE.

A TRANSVERSE CONSTRUCTION JOINT IS REQUIRED IN SPAN A & SPAN B, FOR LOCATION, SEE "LAYOUT FOR POURING SEQUENCE OF REINFORCED CONCRETE DECK SLAB" ON SUPERSTRUCTURE BILL OF MATERIAL SHEET.

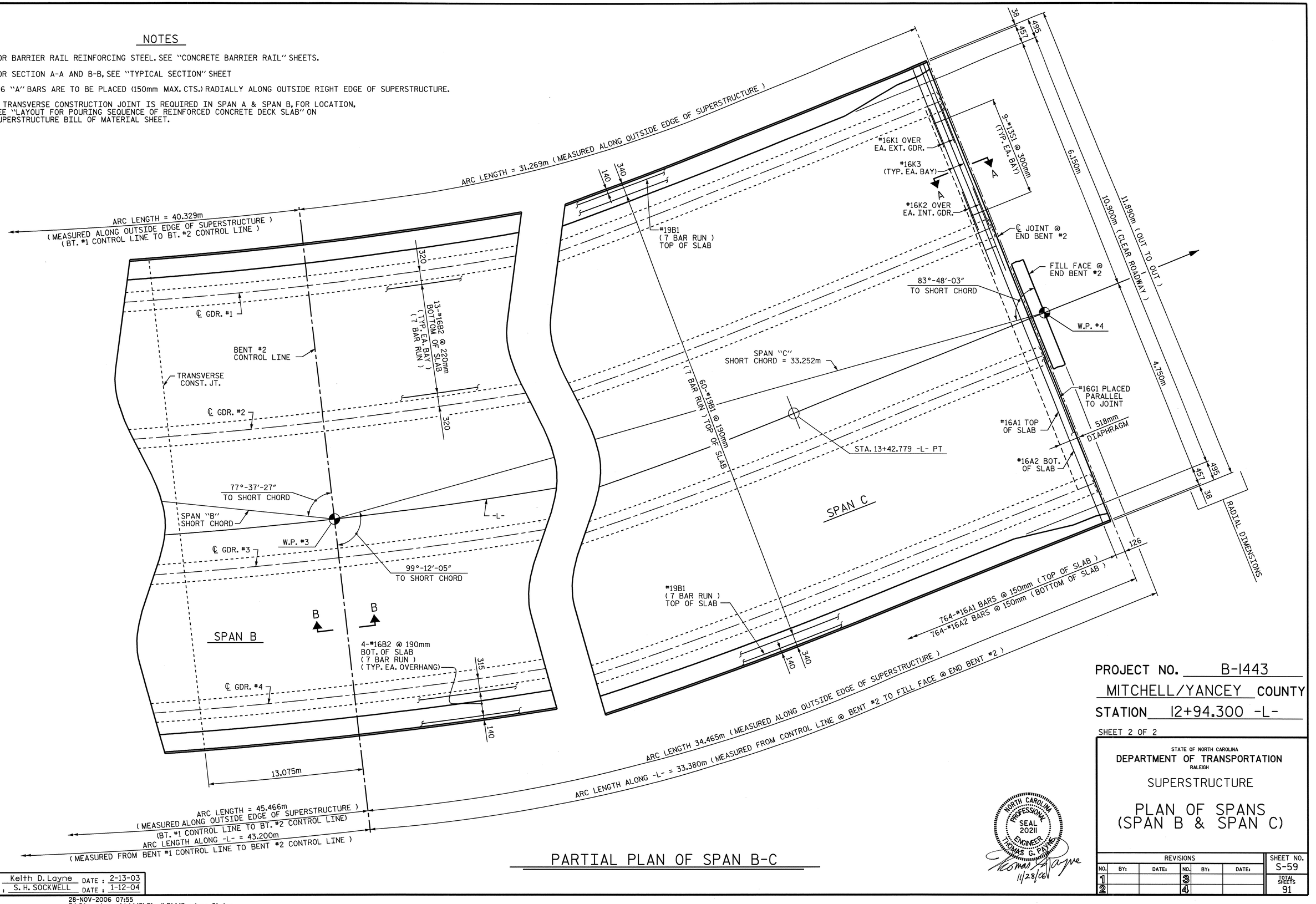


## PARTIAL PLAN OF SPAN B-C

PROJECT NO. B-1443

MITCHELL/YANCEY COUNTY

STATION 12+94.300 -L-

SHEET 2 OF 2

STATE OF NORTH CAROLINA
DEPARTMENT OF TRANSPORTATION
RALEIGH

SUPERSTRUCTURE

PLAN OF SPANS (SPAN B & SPAN C)

| REVISIONS | | | | | | SHEET NO. |
|---|---|---|---|---|---|---|
| NO. | BY: | DATE: | NO. | BY: | DATE: | S-59 |
| 1 | | | 3 | | | TOTAL SHEETS |
| 2 | | | 4 | | | 91 |

NORTH CAROLINA PROFESSIONAL SEAL 20211 ENGINEER THOMAS G. PAYNE
11/28/06

DRAWN BY : Keith D. Layne DATE : 2-13-03
CHECKED BY : S. H. SOCKWELL DATE : 1-12-04

28-NOV-2006 07:55
F:\Structures\b1443\Final\B1443_sd_ps_01.dgn
klayne

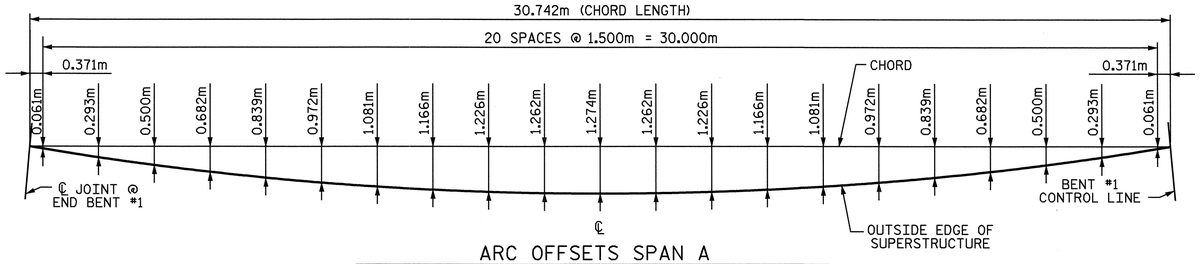


ARC OFFSETS SPAN A
LEFT OUTSIDE EDGE OF SUPERSTRUCTURE

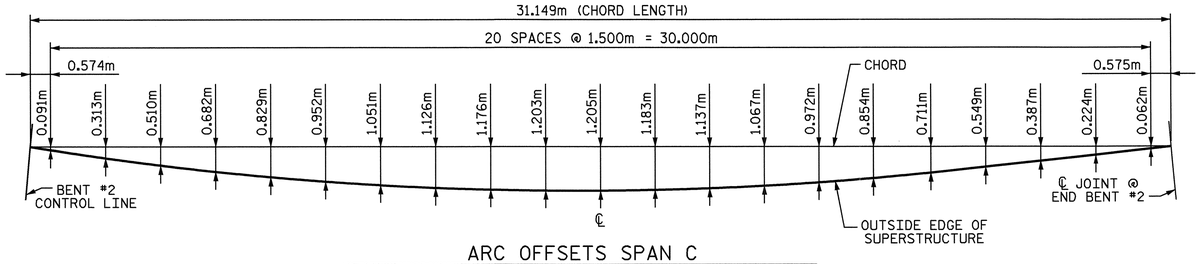


ARC OFFSETS SPAN C
LEFT OUTSIDE EDGE OF SUPERSTRUCTURE

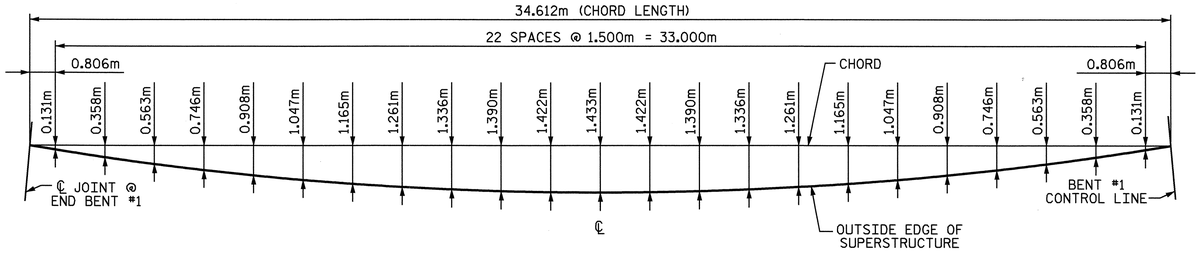


ARC OFFSETS SPAN A
RIGHT OUTSIDE EDGE OF SUPERSTRUCTURE

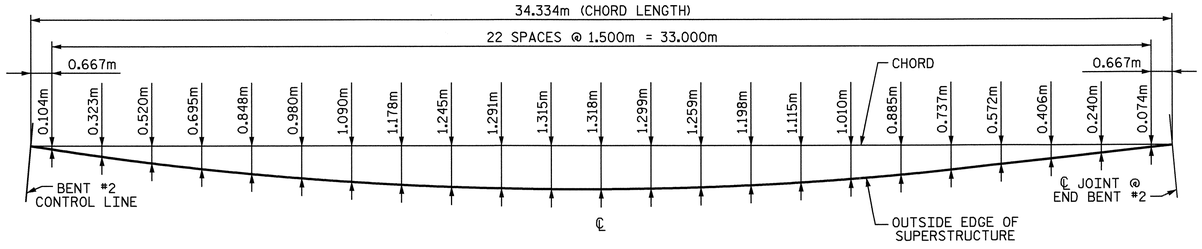


ARC OFFSETS SPAN C
RIGHT OUTSIDE EDGE OF SUPERSTRUCTURE

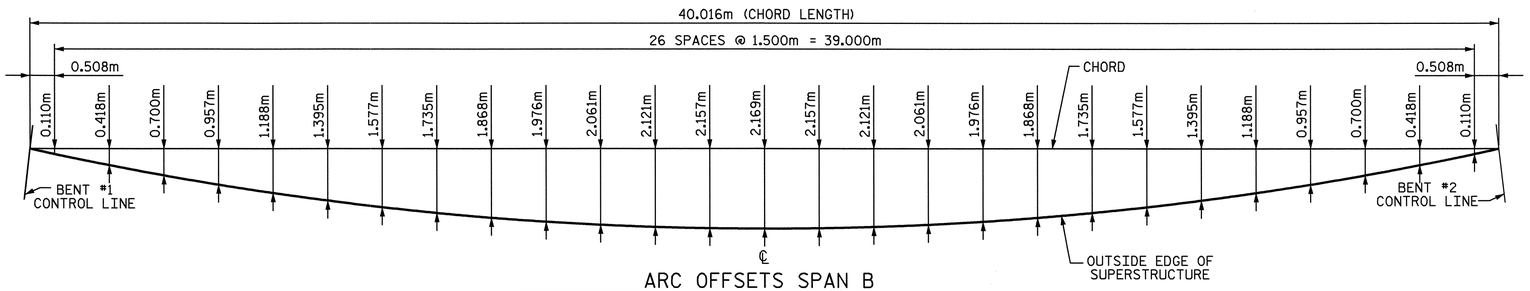


ARC OFFSETS SPAN B
LEFT OUTSIDE EDGE OF SUPERSTRUCTURE

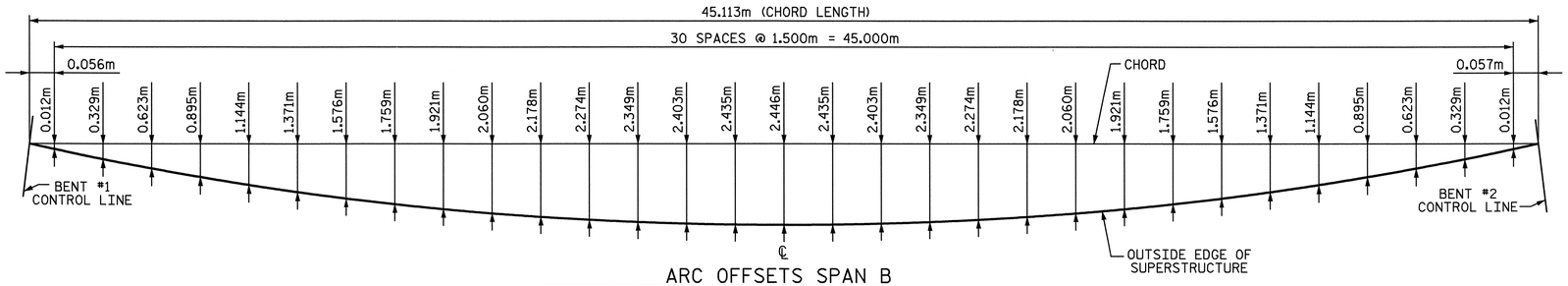


ARC OFFSETS SPAN B
RIGHT OUTSIDE EDGE OF SUPERSTRUCTURE

PROJECT NO. B-1443
MITCHELL/YANCEY COUNTY
STATION 12+94.300 -L-

STATE OF NORTH CAROLINA
DEPARTMENT OF TRANSPORTATION
RALEIGH

SUPERSTRUCTURE

ARC OFFSETS

NORTH CAROLINA PROFESSIONAL SEAL 20211 ENGINEER THOMAS G. PAYNE
Thomas G. Payne
10/18/06

| REVISIONS | | | | | | SHEET NO. |
|---|---|---|---|---|---|---|
| NO. | BY: | DATE: | NO. | BY: | DATE: | S-60 |
| 1 | | | 3 | | | TOTAL SHEETS |
| 2 | | | 4 | | | 91 |

DRAWN BY : Keith D. Layne DATE : 2-13-03
CHECKED BY : S. H. SOCKWELL DATE : 1-12-04

18-OCT-2006 11:48
F:\Structures\b1443\Final\B1443_sd_ps_01.dgn

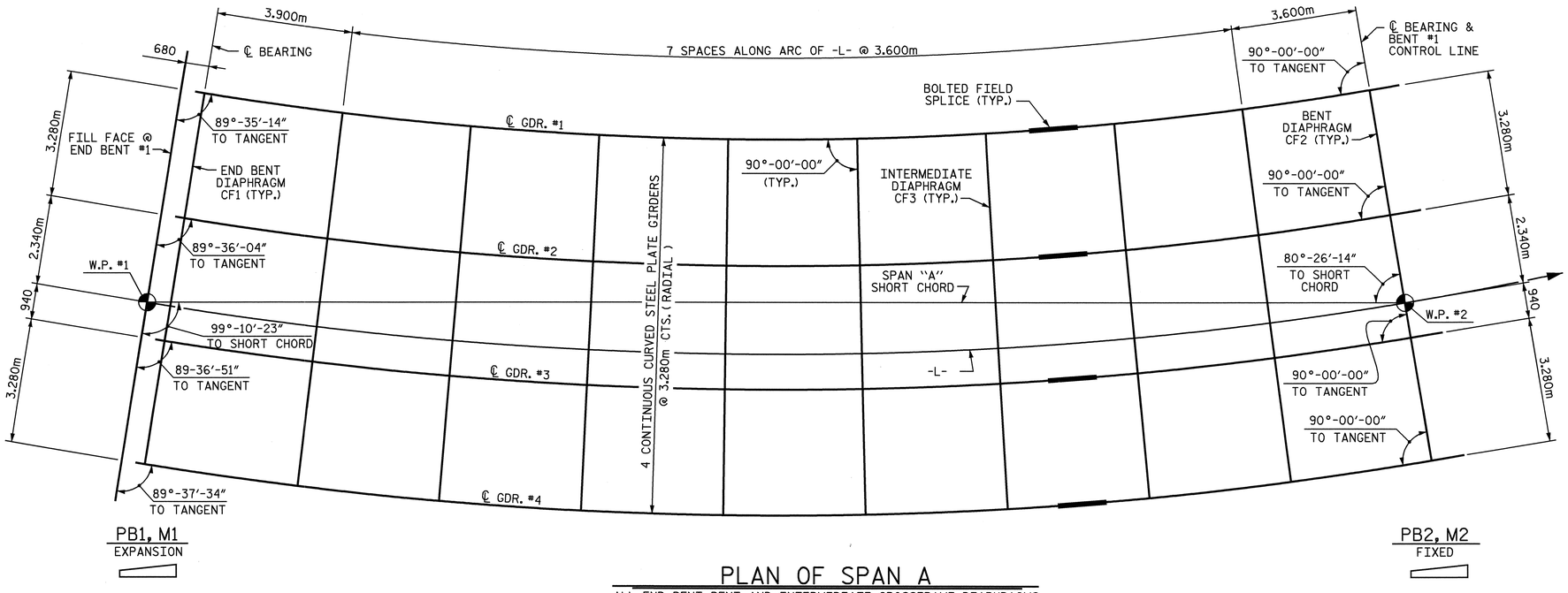


## PLAN OF SPAN A

ALL END BENT, BENT AND INTERMEDIATE CROSSFRAME DIAPHRAGMS
( TYPES CF1, CF2, & CF3 ) ARE TO BE PLACED RADIALLY TO ℄ GIRDERS.

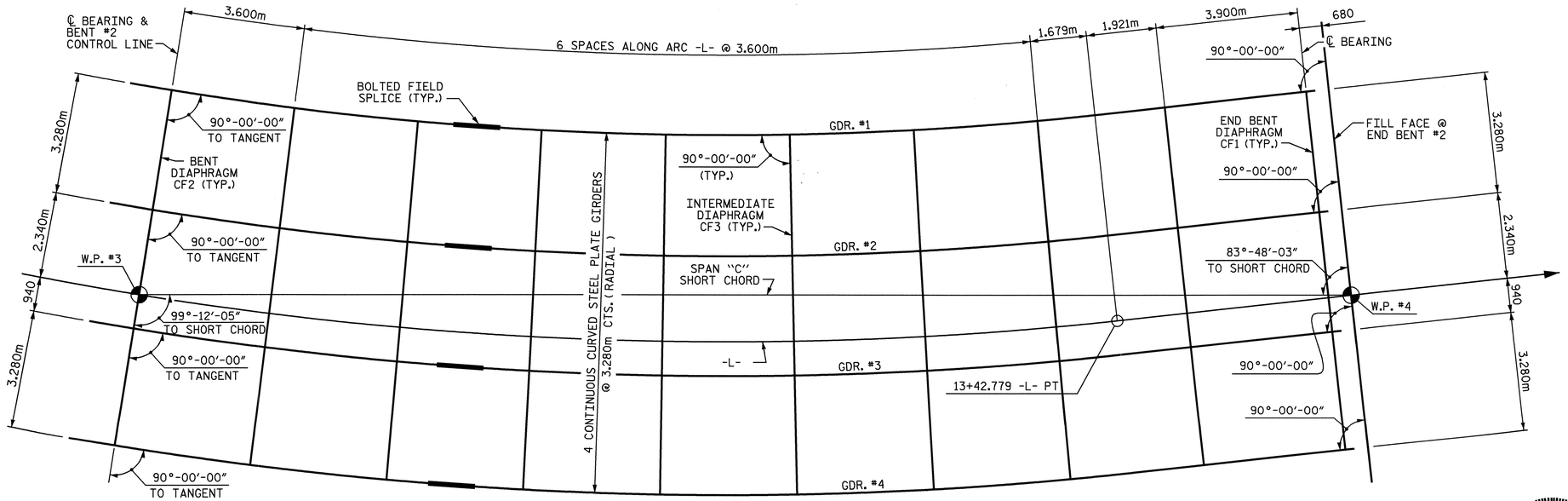


## PLAN OF SPAN C

ALL BENT AND INTERMEDIATE CROSSFRAME DIAPHRAGMS
(TYPES CF1, CF2, & CF3) ARE TO BE PLACED RADIALLY TO ℄ GIRDERS.

DRAWN BY : Keith D. Layne DATE : 2-19-03
CHECKED BY : S. H. SOCKWELL DATE : 1-12-04

18-OCT-2006 11:48
F:\Structures\b1443\Final\B1443_sd_fp_01.dgn
klayne

PROJECT NO. B-1443
MITCHELL/YANCEY COUNTY
STATION 12+94.300 -L-

SHEET 1 OF 2

STATE OF NORTH CAROLINA
DEPARTMENT OF TRANSPORTATION
RALEIGH

SUPERSTRUCTURE

FRAMING PLAN
SPANS A AND C

| REVISIONS | | | | | | SHEET NO. |
|---|---|---|---|---|---|---|
| NO. | BY: | DATE: | NO. | BY: | DATE: | S-61 |
| 1 | | | 3 | | | TOTAL SHEETS |
| 2 | | | 4 | | | 91 |

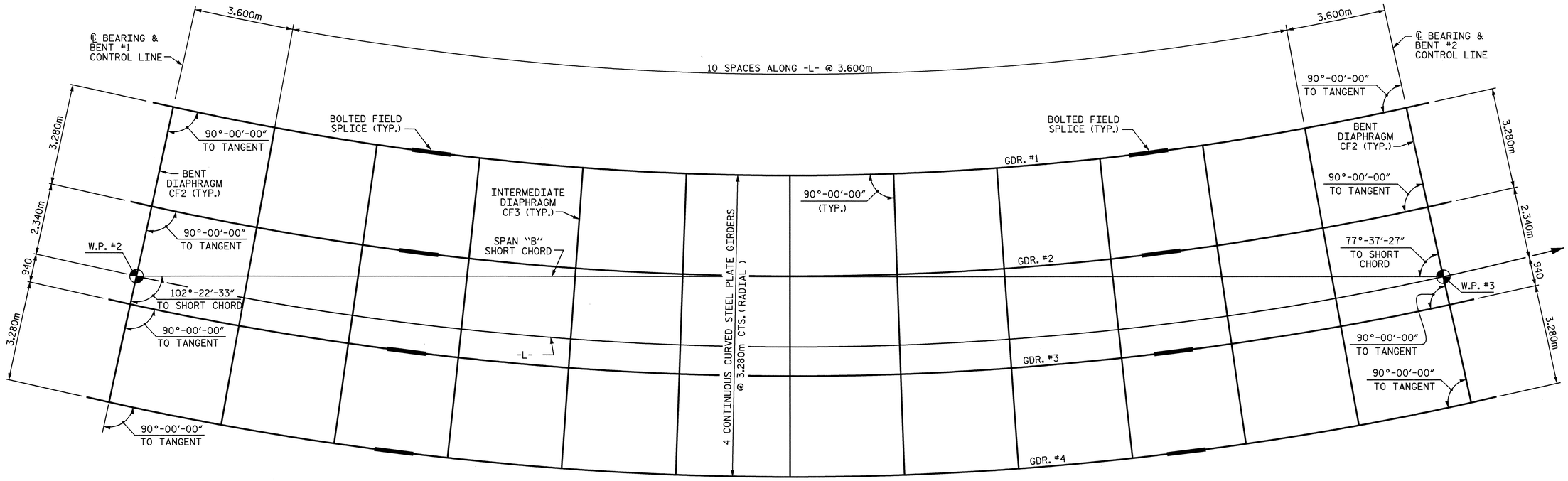


PB2, M2
FIXED

PB3, M2
FIXED

## PLAN OF SPAN B

ALL BENT AND INTERMEDIATE CROSSFRAME DIAPHRAGMS
( TYPES CF2 & CF3 ) ARE TO BE PLACED RADIALLY TO ℄ GIRDERS.

PROJECT NO. B-1443

MITCHELL/YANCEY COUNTY

STATION 12+94.300 -L-

SHEET 2 OF 2

STATE OF NORTH CAROLINA
DEPARTMENT OF TRANSPORTATION
RALEIGH

SUPERSTRUCTURE

FRAMING PLAN
SPAN B

| REVISIONS | | | | | | SHEET NO. |
|---|---|---|---|---|---|---|
| NO. | BY: | DATE: | NO. | BY: | DATE: | S-62 |
| 1 | | | 3 | | | TOTAL SHEETS |
| 2 | | | 4 | | | 91 |

NORTH CAROLINA PROFESSIONAL SEAL 20211 ENGINEER THOMAS G. PAYNE

10/18/06

DRAWN BY : Keith D. Layne DATE : 2-19-03
CHECKED BY : S. H. SOCKWELL DATE : 1-12-04

18-OCT-2006 11:48
F:\Structures\b1443\Final\B1443_sd_fp_01.dgn
klayne

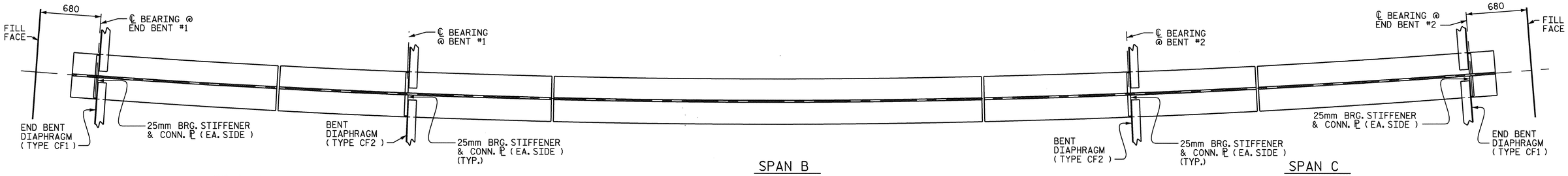


# CURVED GIRDER BOTTOM FLANGE DETAIL

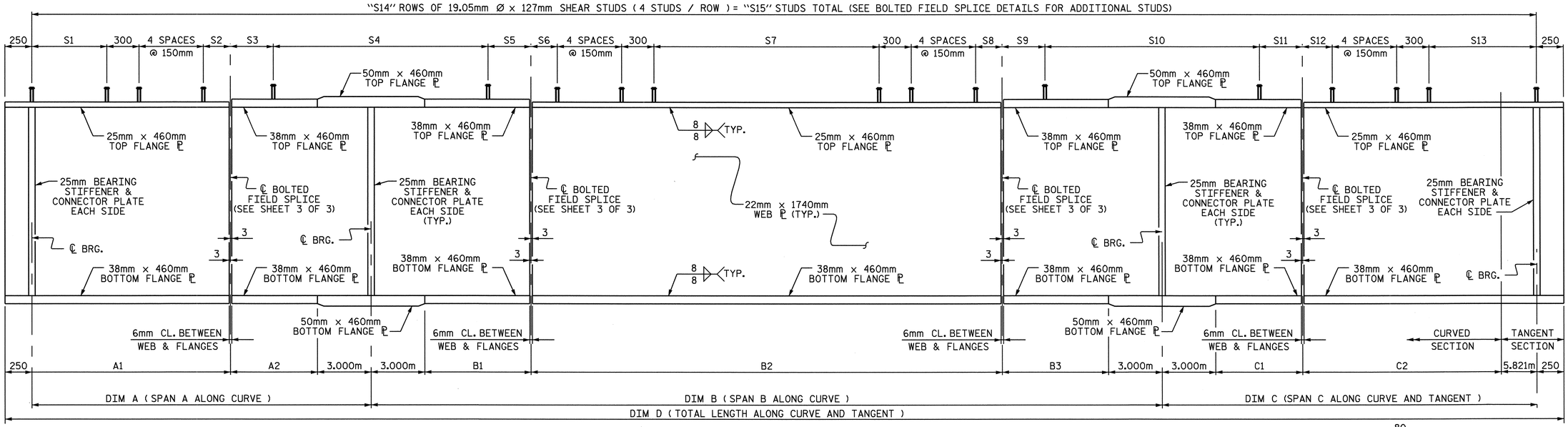


# CURVED GIRDER ELEVATION

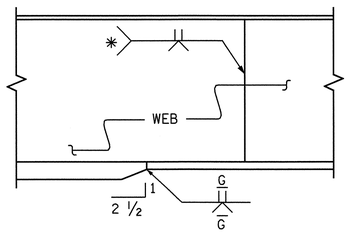


TYPICAL FLANGE AND WEB BUTT JOINT

* GRIND SMOOTH AND FLUSH ON OUTER FACE OF EXTERIOR GIRDERS

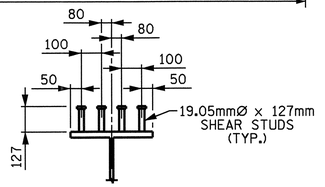


SHEAR STUD DETAILS

## SHEAR STUD SPACING TABLE

| GDR.# | S1 | S2 | S3 | S4 | S5 | S6 | S7 | S8 | S9 | S10 | S11 | S12 | S13 | S14 | S15 |
|---|---|---|---|---|---|---|---|---|---|---|---|---|---|---|---|
| 1 | 69 SPA.@ 300mm | 852mm | 1000mm | 25 SPA.@ 600mm | 1000mm | 846mm | 67 SPA. @ 300mm | 846mm | 1000mm | 25 SPA. @ 600mm | 1000mm | 879mm | 70 SPA. @ 300mm | 281 | 1124 |
| 2 | 71 SPA. @ 300mm | 1035mm | 995mm | 26 SPA. @ 600mm | 995mm | 954mm | 69 SPA. @ 300mm | 955mm | 995mm | 26 SPA. @ 600mm | 995mm | 871mm | 72 SPA. @ 300mm | 289 | 1156 |
| 3 | 74 SPA. @ 300mm | 907mm | 995mm | 27 SPA. @ 600mm | 995mm | 913mm | 72 SPA. @ 300mm | 913mm | 995mm | 27 SPA. @ 600mm | 995mm | 853mm | 74 SPA. @ 300mm | 299 | 1196 |
| 4 | 77 SPA. @ 300mm | 790mm | 985mm | 28 SPA. @ 600mm | 985mm | 881mm | 75 SPA. @ 300mm | 882mm | 985mm | 28 SPA. @ 600mm | 985mm | 844mm | 76 SPA. @ 300mm | 309 | 1236 |

## GIRDER DIMENSIONS

| GDR.# | RADIUS | A1 | A2 | B1 | B2 | B3 | C1 | C2 | DIM A | DIM B | DIM C | DIM D |
|---|---|---|---|---|---|---|---|---|---|---|---|---|
| 1 | 94.380m | 22.452m | 5.410m | 5.590m | 23.592m | 5.590m | 5.410m | 16.958m | 30.862m (30.866m SLOPED) | 40.772m (40.785m SLOPED) | 31.189m (31.189m SLOPED) | 103.323m (103.340m SLOPED) |
| 2 | 97.660m | 23.235m | 5.700m | 5.890m | 24.409m | 5.890m | 5.700m | 17.550m | 31.935m (31.939m SLOPED) | 42.189m (42.202m SLOPED) | 32.071m (32.071m SLOPED) | 106.695m (106.712m SLOPED) |
| 3 | 100.940m | 24.007m | 6.000m | 6.190m | 25.226m | 6.190m | 6.000m | 18.132m | 33.007m (33.011m SLOPED) | 43.606m (43.618m SLOPED) | 32.953m (32.954m SLOPED) | 110.066m (110.083m SLOPED) |
| 4 | 104.220m | 24.790m | 6.290m | 6.480m | 26.063m | 6.480m | 6.290m | 18.723m | 34.080m (34.084m SLPOED) | 45.023m (45.035m SLOPED) | 33.834m (33.835m SLOPED) | 113.437m (113.454m SLOPED) |

NOTE : ALL GIRDER DIMENSIONS IN THE ABOVE TABLE ARE MEASURED ALONG ℄ OF GIRDER.

PROJECT NO. B-1443

MITCHELL/YANCEY COUNTY

STATION 12+94.300 -L-

SHEET 1 OF 3

STATE OF NORTH CAROLINA
DEPARTMENT OF TRANSPORTATION
RALEIGH

SUPERSTRUCTURE

STRUCTURAL STEEL DETAILS

NORTH CAROLINA PROFESSIONAL SEAL 20211 ENGINEER THOMAS G. PAYNE

10/19/06

| REVISIONS | | | | | | SHEET NO. |
|---|---|---|---|---|---|---|
| NO. | BY: | DATE: | NO. | BY: | DATE: | S-63 |
| 1 | | | 3 | | | TOTAL SHEETS |
| 2 | | | 4 | | | 91 |

DRAWN BY : Keith D. Layne DATE : 2-21-03
CHECKED BY : S. H. SOCKWELL DATE : 1-12-04

18-OCT-2006 11:49
F:\Structures\b1443\Final\B1443_sd_ss_01.dgn
klayne

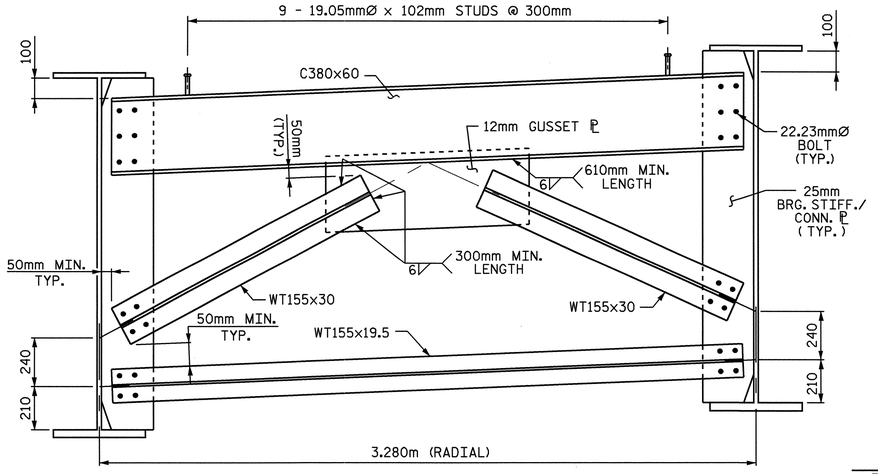


## END BENT CROSSFRAME
(CF1)

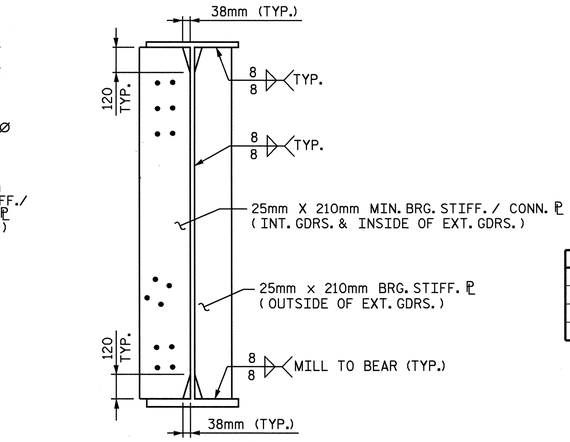


## BRG. STIFF./CONN.℄ DETAIL
END BENT #1 AND #2 CROSSFRAME

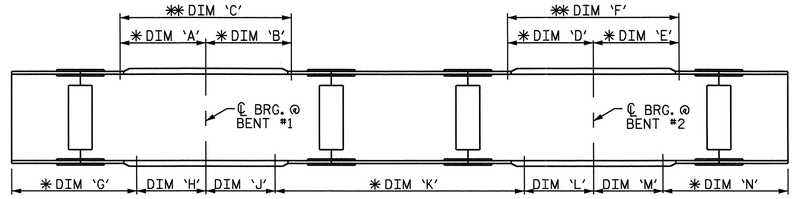


| GDR.# | DIM 'A' | DIM 'B' | DIM 'C' | DIM 'D' | DIM 'E' | DIM 'F' | DIM 'G' | DIM 'H' | DIM 'J' | DIM 'K' | DIM 'L' | DIM 'M' | DIM 'N' |
|---|---|---|---|---|---|---|---|---|---|---|---|---|---|
| 1 | 11.500m | 10.870m | 22.370m | 11.020m | 11.380m | 22.400m | 24.350m | 6.512m | 6.600m | 27.530m | 6.642m | 6.559m | 24.630m |
| 2 | 12.130m | 11.050m | 23.180m | 11.160m | 12.150m | 23.310m | 25.080m | 6.855m | 6.910m | 28.370m | 6.909m | 6.821m | 25.250m |
| 3 | 13.240m | 11.750m | 24.990m | 11.680m | 13.260m | 24.940m | 25.860m | 7.147m | 7.240m | 29.150m | 7.216m | 7.113m | 25.840m |
| 4 | 14.390m | 12.690m | 27.080m | 12.470m | 14.450m | 26.920m | 26.510m | 7.570m | 7.700m | 29.660m | 7.663m | 7.544m | 26.290m |

## CHARPY V-NOTCH TEST FOR GIRDERS

✳ CHARPY V-NOTCH TESTS WILL BE REQUIRED FOR ALL TOP OR BOTTOM FLANGE PLATES WHICH FALLS WITHIN THESE LIMITS, INCLUDING ALL WEB PLATES, AND ALL SPLICE PLATES. IF A PERMITTED SHOP FLANGE SPLICE IS NOT USED, CHARPY V-NOTCH TESTS WILL BE REQUIRED FOR THE ENTIRE TOP FLANGE PLATE, FOR CHARPY V-NOTCH TESTS SEE ARTICLE 1072-9 OF THE STANDARD SPECIFICATIONS.

✳✳ NO WELDING OF FORMS OR FALSEWORK TO THE TOP FLANGE WILL BE PERMITTED IN THIS REGION.

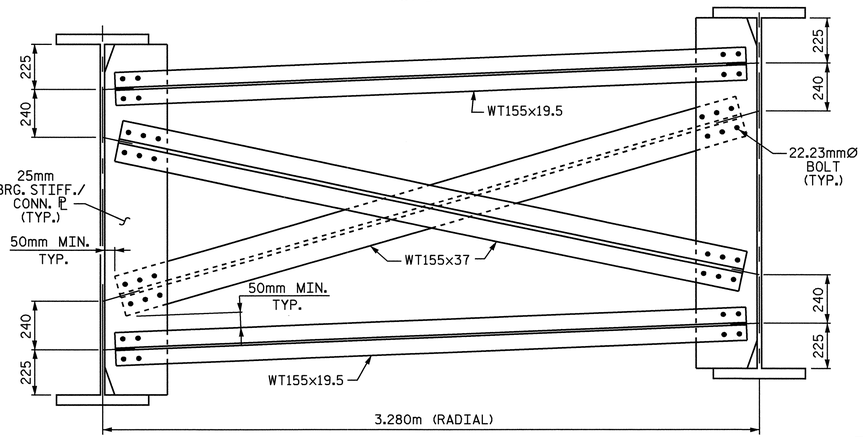


## BENT CROSSFRAME
(CF2)

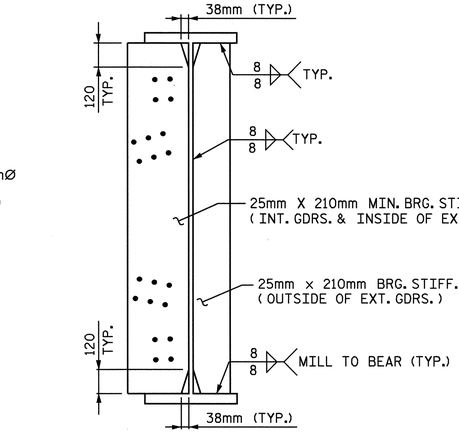


## BRG. STIFF./CONN.℄ DETAIL
BENT #1 AND #2 CROSSFRAME

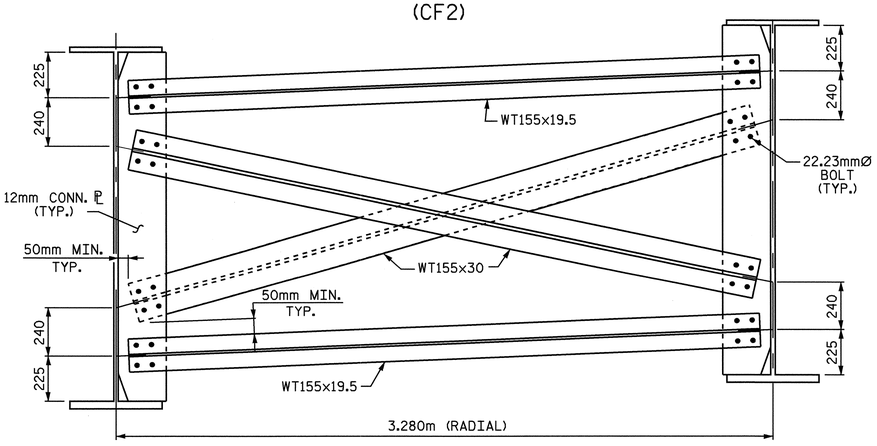


## INTERMEDIATE CROSSFRAME
(CF3)

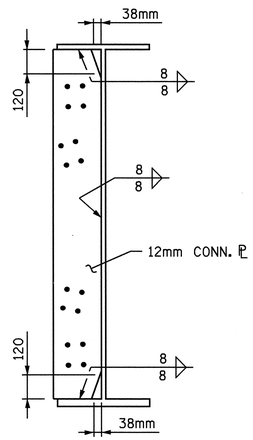


## CONNECTOR ℄ DETAIL
INTERMEDIATE CROSSFRAME

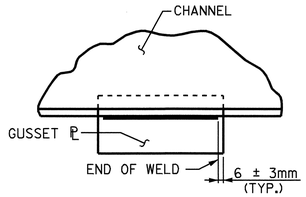


## TYPICAL GUSSET PLATE CONNECTION

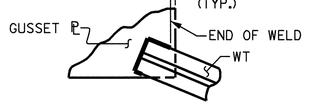


## TYPICAL "TEE" TO GUSSET PLATE CONNECTIONS

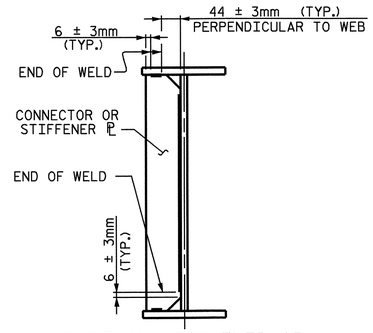


## TYPICAL STIFFENER OR CONNECTOR PLATE CONNECTIONS

## WELD TERMINATION DETAILS

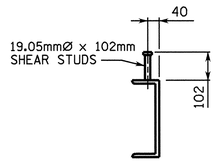


## SHEAR STUD DETAILS

PROJECT NO. B-1443

MITCHELL/YANCEY COUNTY

STATION 12+94.300 -L-

SHEET 2 OF 3

STATE OF NORTH CAROLINA
DEPARTMENT OF TRANSPORTATION
RALEIGH

SUPERSTRUCTURE

# STRUCTURAL STEEL DETAILS

| REVISIONS | | | | | | SHEET NO. |
|---|---|---|---|---|---|---|
| NO. | BY: | DATE: | NO. | BY: | DATE: | S-64 |
| 1 | | | 3 | | | TOTAL SHEETS |
| 2 | | | 4 | | | 91 |

NORTH CAROLINA PROFESSIONAL SEAL 20211 ENGINEER THOMAS G. PAYNE
10/18/06

DRAWN BY : Keith D. Layne DATE : 2-21-03
CHECKED BY : S. H. SOCKWELL DATE : 1-12-04

18-OCT-2006 15:19
R:\Structures\b1443\Final\B1443_sd_ss_01.dgn

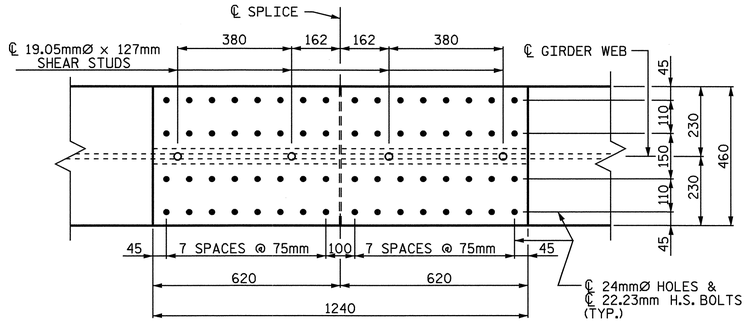


PLAN
TOP OF TOP FLANGE

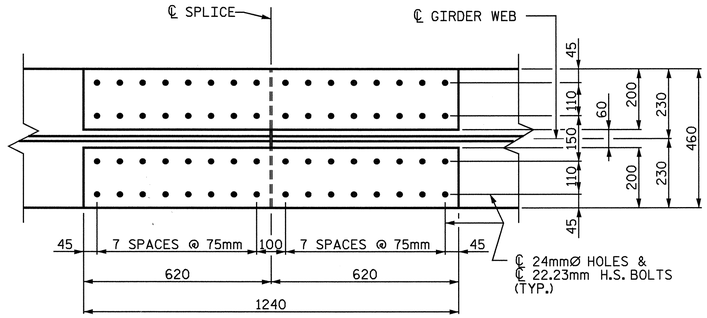


PLAN
TOP OF BOTTOM FLANGE

## NOTES :

ALL STRUCTURAL STEEL SHALL BE AASHTO M270 GRADE 345W STEEL AND PAINTED IN ACCORDANCE WITH SYSTEM 4 OF ARTICLE 442-7 OF THE STANDARD SPECIFICATIONS UNLESS OTHERWISE NOTED ON THE PLANS.

ALL DIMENSIONS SHOWN ARE HORIZONTAL OR VERTICAL, UNLESS OTHERWISE NOTED.

ALL FIELD CONNECTIONS TO BE 22.23mm DIA. HIGH STRENGTH BOLTS UNLESS OTHERWISE NOTED.

BEARING STIFFENERS ARE TO BE PLACED NORMAL TO THE WEB OF THE GIRDER AND SHALL BE PLUMB.

SHOP SPLICES ARE PERMITTED TO LIMIT THE MAXIMUM REQUIRED FLANGE PIECE LENGTHS TO 18 METERS AND WEB PIECE LENGTHS TO 14 METERS. PERMITTED FLANGE AND WEB SHOP SPLICES SHALL NOT BE LOCATED WITHIN 4.5 METERS OF MAXIMUM DEAD LOAD DEFLECTION (NOR WITHIN 4.5 METERS OF INTERMEDIATE BEARINGS OF CONTINUOUS UNITS). KEEP 600mm MINIMUM BETWEEN WEB AND FLANGE SHOP SPLICES. KEEP 150mm MINIMUM BETWEEN CONNECTOR PLATE OR TRANSVERSE STIFFENER WELDS AND WEB OR FLANGE SHOP SPLICES.

STUDS ON GIRDERS MAY BE SHIFTED UP TO 25mm IF NECESSARY TO CLEAR FLANGE SPLICE WELD.

TENSION ON THE AASHTO M164 BOLTS SHALL BE CALIBRATED USING DIRECT TENSION INDICATOR WASHERS IN ACCORDANCE WITH ARTICLE 440-10 OF THE STANDARD SPECIFICATIONS.

ENDS OF CONTINUOUS PLATE GIRDERS SHALL BE IN A PLUMB POSITION AFTER THE TOTAL DEAD LOAD DEFLECTION HAS OCCURRED. SHOP PLANS SHALL BE PREPARED ACCORDINGLY.

FOR HEAT CURVING GIRDERS, SEE SPECIAL PROVISIONS.

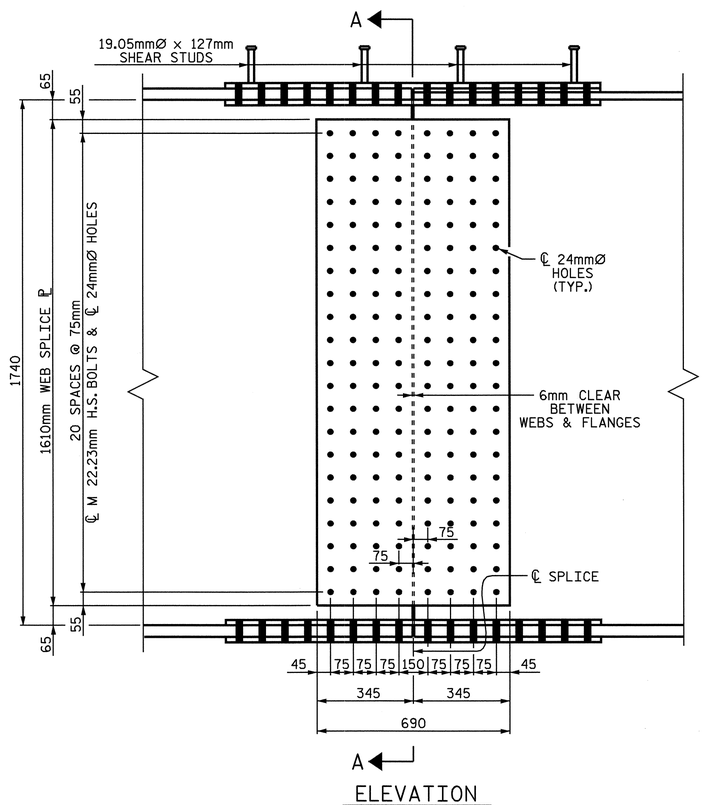


ELEVATION

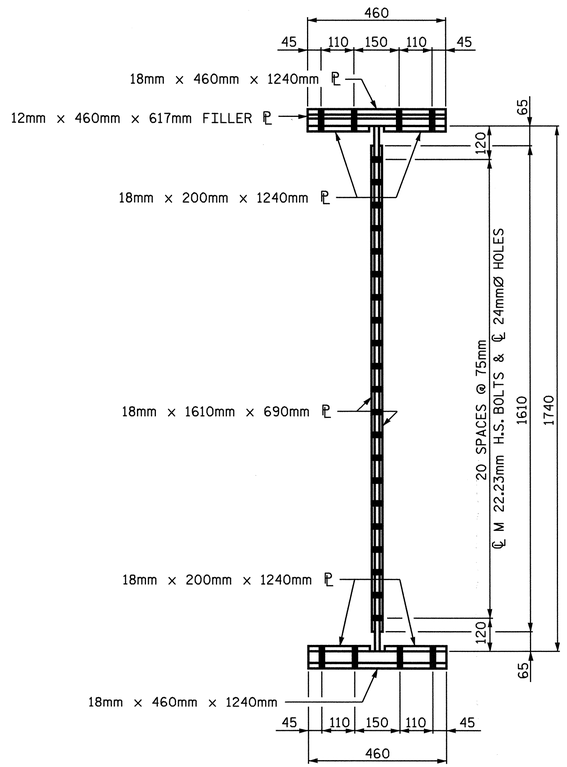


SECTION A-A

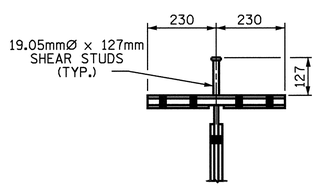


SHEAR STUD DETAIL FOR
TOP FLANGE SPLICE PLATE

# BOLTED FIELD SPLICE DETAILS

DRAWN BY : Keith D. Layne DATE : 2-21-03
CHECKED BY : S. H. SOCKWELL DATE : 1-12-04

18-OCT-2006 11:49
F:\Structures\b1443\Final\B1443_sd_ss_01.dgn
klayne

NORTH CAROLINA PROFESSIONAL SEAL 20211 ENGINEER THOMAS G. PAYNE
10/18/06

PROJECT NO. B-1443
MITCHELL/YANCEY COUNTY
STATION 12+94.300 -L-

SHEET 3 OF 3

STATE OF NORTH CAROLINA
DEPARTMENT OF TRANSPORTATION
RALEIGH

SUPERSTRUCTURE

STRUCTURAL STEEL DETAILS

| REVISIONS | | | | | | SHEET NO. |
|---|---|---|---|---|---|---|
| NO. | BY: | DATE: | NO. | BY: | DATE: | S-65 |
| 1 | | | 3 | | | TOTAL SHEETS |
| 2 | | | 4 | | | 91 |

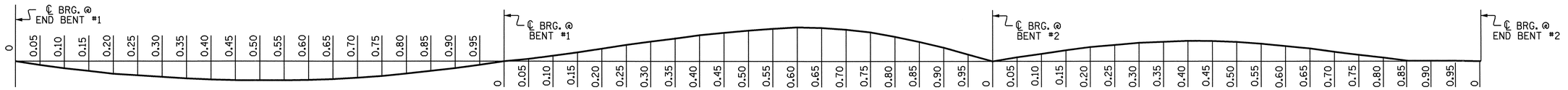


## SCHEMATIC CAMBER ORDINATES

SLOPE FOR THE ZERO CAMBER BASE LINE VARIES

## DEAD LOAD DEFLECTION TABLE FOR EXTERIOR GIRDER #1

| | SPAN A | | | | | | | | | | | | | | | | | | | | | SPAN B | | | | | | | | | | | | | | | | | | | | | | |
|---|---|---|---|---|---|---|---|---|---|---|---|---|---|---|---|---|---|---|---|---|---|---|---|---|---|---|---|---|---|---|---|---|---|---|---|---|---|---|---|---|---|---|---|
| TWENTIETH POINTS | 0 | 0.05 | 0.10 | 0.15 | 0.20 | 0.25 | 0.30 | 0.35 | 0.40 | 0.45 | 0.50 | 0.55 | 0.60 | 0.65 | 0.70 | 0.75 | 0.80 | 0.85 | 0.90 | 0.95 | 0 | 0.05 | 0.10 | 0.15 | 0.20 | 0.25 | 0.30 | 0.35 | 0.40 | 0.45 | 0.50 | 0.55 | 0.60 | 0.65 | 0.70 | 0.75 | 0.80 | 0.85 | 0.90 | 0.95 | 0 |
| DEFLECTION DUE TO WEIGHT OF GIRDER | 0 | -0.001 | -0.001 | -0.002 | -0.002 | -0.003 | -0.003 | -0.003 | -0.003 | -0.003 | -0.003 | -0.003 | -0.003 | -0.002 | -0.002 | -0.001 | -0.001 | 0 | 0 | 0 | 0 | 0 | -0.001 | -0.002 | -0.003 | -0.004 | -0.004 | -0.005 | -0.006 | -0.006 | -0.006 | -0.006 | -0.006 | -0.005 | -0.004 | -0.004 | -0.003 | -0.002 | -0.001 | 0 | 0 |
| * DEFLECTION DUE TO WEIGHT OF SLAB | 0 | -0.002 | -0.004 | -0.006 | -0.007 | -0.009 | -0.010 | -0.010 | -0.010 | -0.010 | -0.010 | -0.009 | -0.008 | -0.007 | -0.005 | -0.004 | -0.002 | -0.001 | 0 | 0 | 0 | -0.001 | -0.003 | -0.005 | -0.008 | -0.011 | -0.014 | -0.016 | -0.018 | -0.019 | -0.019 | -0.019 | -0.018 | -0.016 | -0.014 | -0.011 | -0.008 | -0.005 | -0.003 | -0.001 | 0 |
| DEFLECTION DUE TO WEIGHT OF BARRIER RAIL | 0 | 0 | 0 | 0 | 0 | 0 | -0.001 | -0.001 | -0.001 | -0.001 | -0.001 | 0 | 0 | 0 | 0 | 0 | 0 | 0 | 0 | 0 | 0 | 0 | 0 | 0 | 0 | -0.001 | -0.001 | -0.001 | -0.001 | -0.001 | -0.001 | -0.001 | -0.001 | -0.001 | -0.001 | -0.001 | 0 | 0 | 0 | 0 | 0 |
| ** TOTAL DEAD LOAD DEFLECTION | 0 | -0.003 | -0.005 | -0.008 | -0.009 | -0.012 | -0.014 | -0.014 | -0.014 | -0.014 | -0.014 | -0.012 | -0.011 | -0.009 | -0.007 | -0.005 | -0.003 | -0.001 | 0 | 0 | 0 | -0.001 | -0.004 | -0.007 | -0.011 | -0.016 | -0.019 | -0.022 | -0.025 | -0.026 | -0.026 | -0.026 | -0.025 | -0.022 | -0.019 | -0.016 | -0.011 | -0.007 | -0.004 | -0.001 | 0 |
| VERTICAL CURVE ORDINATE | 0 | -0.020 | -0.038 | -0.054 | -0.068 | -0.079 | -0.089 | -0.096 | -0.101 | -0.105 | -0.106 | -0.105 | -0.101 | -0.096 | -0.089 | -0.079 | -0.068 | -0.054 | -0.038 | -0.020 | 0 | 0.009 | 0.018 | 0.027 | 0.036 | 0.045 | 0.054 | 0.062 | 0.071 | 0.080 | 0.089 | 0.098 | 0.106 | 0.110 | 0.108 | 0.102 | 0.091 | 0.076 | 0.055 | 0.030 | 0 |
| ORDINATE DUE TO SUPERELEVATION | 0 | 0 | 0 | 0 | 0 | 0 | 0 | 0 | 0 | 0 | 0 | 0 | 0 | 0 | 0 | 0 | 0 | 0 | 0 | 0 | 0 | 0 | 0 | 0 | 0 | 0 | 0 | 0 | 0 | 0 | 0 | 0 | 0 | 0 | 0 | 0 | 0 | 0 | 0 | 0 | 0 |
| REQUIRED CAMBER | 0 | -17 | -33 | -46 | -59 | -67 | -75 | -82 | -87 | -91 | -92 | -93 | -90 | -87 | -82 | -74 | -65 | -53 | -38 | -20 | 0 | 10 | 22 | 34 | 47 | 61 | 73 | 84 | 96 | 106 | 115 | 124 | 131 | 132 | 127 | 118 | 102 | 83 | 59 | 31 | 0 |

## DEAD LOAD DEFLECTION TABLE FOR EXTERIOR GIRDER #1

| | SPAN C | | | | | | | | | | | | | | | | | | | | |
|---|---|---|---|---|---|---|---|---|---|---|---|---|---|---|---|---|---|---|---|---|---|
| TWENTIETH POINTS | 0 | 0.05 | 0.10 | 0.15 | 0.20 | 0.25 | 0.30 | 0.35 | 0.40 | 0.45 | 0.50 | 0.55 | 0.60 | 0.65 | 0.70 | 0.75 | 0.80 | 0.85 | 0.90 | 0.95 | 0 |
| DEFLECTION DUE TO WEIGHT OF GIRDER | 0 | 0 | 0 | -0.001 | -0.001 | -0.001 | -0.002 | -0.002 | -0.003 | -0.003 | -0.003 | -0.004 | -0.004 | -0.004 | -0.003 | -0.003 | -0.003 | -0.002 | -0.001 | -0.001 | 0 |
| * DEFLECTION DUE TO WEIGHT OF SLAB | 0 | 0 | 0 | -0.001 | -0.003 | -0.004 | -0.006 | -0.007 | -0.009 | -0.010 | -0.011 | -0.011 | -0.011 | -0.011 | -0.010 | -0.009 | -0.008 | -0.006 | -0.004 | -0.002 | 0 |
| DEFLECTION DUE TO WEIGHT OF BARRIER RAIL | 0 | 0 | 0 | 0 | 0 | 0 | 0 | 0 | 0 | -0.001 | -0.001 | -0.001 | -0.001 | -0.001 | -0.001 | 0 | 0 | 0 | 0 | 0 | 0 |
| ** TOTAL DEAD LOAD DEFLECTION | 0 | 0 | 0 | -0.002 | -0.004 | -0.005 | -0.008 | -0.009 | -0.012 | -0.014 | -0.015 | -0.016 | -0.016 | -0.016 | -0.014 | -0.012 | -0.011 | -0.008 | -0.005 | -0.003 | 0 |
| VERTICAL CURVE ORDINATE | 0 | 0.021 | 0.039 | 0.054 | 0.067 | 0.076 | 0.083 | 0.087 | 0.089 | 0.087 | 0.083 | 0.076 | 0.067 | 0.058 | 0.049 | 0.040 | 0.032 | 0.024 | 0.016 | 0.008 | 0 |
| ORDINATE DUE TO SUPERELEVATION | 0 | -0.002 | -0.005 | -0.007 | -0.009 | -0.012 | -0.014 | -0.016 | -0.019 | -0.021 | -0.023 | -0.026 | -0.028 | -0.030 | -0.033 | -0.035 | -0.037 | -0.037 | -0.025 | -0.012 | 0 |
| REQUIRED CAMBER | 0 | 19 | 34 | 49 | 62 | 69 | 77 | 80 | 82 | 80 | 75 | 66 | 55 | 44 | 30 | 17 | 6 | -5 | -4 | -1 | 0 |

## DEAD LOAD DEFLECTION TABLE FOR INTERIOR GIRDER #2

| | SPAN A | | | | | | | | | | | | | | | | | | | | | SPAN B | | | | | | | | | | | | | | | | | | | | | | |
|---|---|---|---|---|---|---|---|---|---|---|---|---|---|---|---|---|---|---|---|---|---|---|---|---|---|---|---|---|---|---|---|---|---|---|---|---|---|---|---|---|---|---|---|
| TWENTIETH POINTS | 0 | 0.05 | 0.10 | 0.15 | 0.20 | 0.25 | 0.30 | 0.35 | 0.40 | 0.45 | 0.50 | 0.55 | 0.60 | 0.65 | 0.70 | 0.75 | 0.80 | 0.85 | 0.90 | 0.95 | 0 | 0.05 | 0.10 | 0.15 | 0.20 | 0.25 | 0.30 | 0.35 | 0.40 | 0.45 | 0.50 | 0.55 | 0.60 | 0.65 | 0.70 | 0.75 | 0.80 | 0.85 | 0.90 | 0.95 | 0 |
| DEFLECTION DUE TO WEIGHT OF GIRDER | 0 | -0.001 | -0.002 | -0.003 | -0.003 | -0.004 | -0.004 | -0.004 | -0.004 | -0.004 | -0.004 | -0.004 | -0.003 | -0.003 | -0.002 | -0.002 | -0.001 | -0.001 | 0 | 0 | 0 | 0 | -0.001 | -0.002 | -0.004 | -0.005 | -0.006 | -0.007 | -0.008 | -0.008 | -0.008 | -0.008 | -0.008 | -0.007 | -0.006 | -0.005 | -0.004 | -0.002 | -0.001 | 0.000 | 0 |
| * DEFLECTION DUE TO WEIGHT OF SLAB | 0 | -0.003 | -0.006 | -0.008 | -0.010 | -0.012 | -0.013 | -0.014 | -0.014 | -0.014 | -0.013 | -0.012 | -0.010 | -0.009 | -0.007 | -0.005 | -0.003 | -0.002 | 0 | 0 | 0 | -0.002 | -0.004 | -0.007 | -0.011 | -0.015 | -0.019 | -0.022 | -0.024 | -0.026 | -0.026 | -0.026 | -0.024 | -0.022 | -0.019 | -0.015 | -0.011 | -0.007 | -0.004 | -0.002 | 0 |
| DEFLECTION DUE TO WEIGHT OF BARRIER RAIL | 0 | 0 | 0 | 0 | 0 | -0.001 | -0.001 | -0.001 | -0.001 | -0.001 | -0.001 | -0.001 | -0.001 | 0 | 0 | 0 | 0 | 0 | 0 | 0 | 0 | 0 | 0 | 0 | -0.001 | -0.001 | -0.001 | -0.001 | -0.001 | -0.001 | -0.001 | -0.001 | -0.001 | -0.001 | -0.001 | -0.001 | 0 | 0 | 0 | 0 | 0 |
| ** TOTAL DEAD LOAD DEFLECTION | 0 | -0.004 | -0.008 | -0.011 | -0.013 | -0.017 | -0.018 | -0.019 | -0.019 | -0.019 | -0.018 | -0.017 | -0.014 | -0.012 | -0.009 | -0.007 | -0.004 | -0.003 | 0 | 0 | 0 | -0.002 | -0.005 | -0.009 | -0.016 | -0.021 | -0.026 | -0.030 | -0.033 | -0.035 | -0.035 | -0.035 | -0.033 | -0.030 | -0.026 | -0.021 | -0.016 | -0.009 | -0.005 | -0.002 | 0 |
| VERTICAL CURVE ORDINATE | 0 | -0.020 | -0.038 | -0.054 | -0.068 | -0.079 | -0.089 | -0.096 | -0.101 | -0.105 | -0.106 | -0.105 | -0.101 | -0.096 | -0.089 | -0.079 | -0.068 | -0.054 | -0.038 | -0.020 | 0 | 0.009 | 0.018 | 0.027 | 0.036 | 0.045 | 0.054 | 0.062 | 0.071 | 0.080 | 0.089 | 0.098 | 0.106 | 0.110 | 0.108 | 0.102 | 0.091 | 0.076 | 0.055 | 0.030 | 0 |
| ORDINATE DUE TO SUPERELEVATION | 0 | 0 | 0 | 0 | 0 | 0 | 0 | 0 | 0 | 0 | 0 | 0 | 0 | 0 | 0 | 0 | 0 | 0 | 0 | 0 | 0 | 0 | 0 | 0 | 0 | 0 | 0 | 0 | 0 | 0 | 0 | 0 | 0 | 0 | 0 | 0 | 0 | 0 | 0 | 0 | 0 |
| REQUIRED CAMBER | 0 | -16 | -30 | -43 | -55 | -62 | -71 | -77 | -82 | -86 | -88 | -88 | -87 | -84 | -80 | -72 | -64 | -51 | -38 | -20 | 0 | 11 | 23 | 36 | 52 | 66 | 80 | 92 | 104 | 115 | 124 | 133 | 139 | 140 | 134 | 123 | 107 | 85 | 60 | 32 | 0 |

## DEAD LOAD DEFLECTION TABLE FOR INTERIOR GIRDER #2

| | SPAN C | | | | | | | | | | | | | | | | | | | | |
|---|---|---|---|---|---|---|---|---|---|---|---|---|---|---|---|---|---|---|---|---|---|
| TWENTIETH POINTS | 0 | 0.05 | 0.10 | 0.15 | 0.20 | 0.25 | 0.30 | 0.35 | 0.40 | 0.45 | 0.50 | 0.55 | 0.60 | 0.65 | 0.70 | 0.75 | 0.80 | 0.85 | 0.90 | 0.95 | 0 |
| DEFLECTION DUE TO WEIGHT OF GIRDER | 0 | 0 | 0 | -0.001 | -0.001 | -0.002 | -0.002 | -0.003 | -0.003 | -0.004 | -0.004 | -0.004 | -0.004 | -0.004 | -0.004 | -0.004 | -0.003 | -0.003 | -0.002 | -0.001 | 0 |
| * DEFLECTION DUE TO WEIGHT OF SLAB | 0 | 0 | 0 | -0.002 | -0.003 | -0.005 | -0.007 | -0.009 | -0.011 | -0.012 | -0.013 | -0.014 | -0.014 | -0.014 | -0.013 | -0.012 | -0.010 | -0.008 | -0.006 | -0.003 | 0 |
| DEFLECTION DUE TO WEIGHT OF BARRIER RAIL | 0 | 0 | 0 | 0 | 0 | 0 | 0 | 0 | -0.001 | -0.001 | -0.001 | -0.001 | -0.001 | -0.001 | -0.001 | -0.001 | 0 | 0 | 0 | 0 | 0 |
| ** TOTAL DEAD LOAD DEFLECTION | 0 | 0 | 0 | -0.003 | -0.004 | -0.007 | -0.009 | -0.012 | -0.015 | -0.017 | -0.018 | -0.019 | -0.019 | -0.019 | -0.018 | -0.017 | -0.013 | -0.011 | -0.008 | -0.004 | 0 |
| VERTICAL CURVE ORDINATE | 0 | 0.021 | 0.039 | 0.054 | 0.067 | 0.076 | 0.083 | 0.087 | 0.089 | 0.088 | 0.084 | 0.077 | 0.068 | 0.059 | 0.051 | 0.042 | 0.033 | 0.025 | 0.017 | 0.008 | 0 |
| ORDINATE DUE TO SUPERELEVATION | 0 | -0.001 | -0.002 | -0.003 | -0.004 | -0.005 | -0.006 | -0.007 | -0.008 | -0.009 | -0.010 | -0.011 | -0.012 | -0.013 | -0.014 | -0.015 | -0.015 | -0.016 | -0.011 | -0.005 | 0 |
| REQUIRED CAMBER | 0 | 20 | 37 | 54 | 67 | 78 | 86 | 92 | 96 | 96 | 92 | 85 | 75 | 65 | 55 | 44 | 31 | 20 | 14 | 7 | 0 |

* INCLUDES SLAB, BUILDUPS & STAY-IN-PLACE FORMS.
ALL VALUES ARE SHOWN IN METERS, EXCEPT " REQUIRED CAMBER ", WHICH IS GIVEN IN MILLIMETERS.

SIGN CONVENTION FOR DEAD LOAD DEFLECTION — ↑ + 0 ↓ −

** MODIFIED TO ACCOUNT FOR CAMBER LOSS DUE TO HEAT-CURVING

NORTH CAROLINA PROFESSIONAL SEAL 20211 ENGINEER THOMAS G. PAYNE
10/18/06

PROJECT NO. B-1443
MITCHELL/YANCEY COUNTY
STATION 12+94.300 -L-

SHEET 1 OF 2

STATE OF NORTH CAROLINA
DEPARTMENT OF TRANSPORTATION
RALEIGH

SUPERSTRUCTURE

DEAD LOAD DEFLECTIONS

| REVISIONS | | | | | | SHEET NO. |
|---|---|---|---|---|---|---|
| NO. | BY: | DATE: | NO. | BY: | DATE: | S-66 |
| 1 | | | 3 | | | TOTAL SHEETS |
| 2 | | | 4 | | | 91 |

DRAWN BY : Keith D. Layne DATE : 2-26-03
CHECKED BY : S. H. SOCKWELL DATE : 1-12-04

18-OCT-2006 11:48
F:\Structures\b1443\Final\B1443_sd_dt_01.dgn
klayne

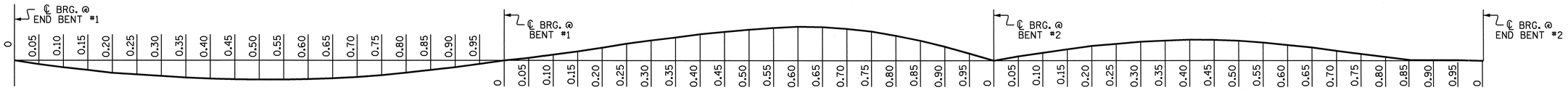


## SCHEMATIC CAMBER ORDINATES

SLOPE FOR THE ZERO CAMBER BASE LINE VARIES

## DEAD LOAD DEFLECTION TABLE FOR INTERIOR GIRDER #3

| | SPAN A | | | | | | | | | | | | | | | | | | | | | SPAN B | | | | | | | | | | | | | | | | | | | | | | | |
|---|---|---|---|---|---|---|---|---|---|---|---|---|---|---|---|---|---|---|---|---|---|---|---|---|---|---|---|---|---|---|---|---|---|---|---|---|---|---|---|---|---|---|---|---|
| TWENTIETH POINTS | 0 | 0.05 | 0.10 | 0.15 | 0.20 | 0.25 | 0.30 | 0.35 | 0.40 | 0.45 | 0.50 | 0.55 | 0.60 | 0.65 | 0.70 | 0.75 | 0.80 | 0.85 | 0.90 | 0.95 | 0 | 0.05 | 0.10 | 0.15 | 0.20 | 0.25 | 0.30 | 0.35 | 0.40 | 0.45 | 0.50 | 0.55 | 0.60 | 0.65 | 0.70 | 0.75 | 0.80 | 0.85 | 0.90 | 0.95 | 0 |
| DEFLECTION DUE TO WEIGHT OF GIRDER | 0 | -0.001 | -0.002 | -0.003 | -0.004 | -0.005 | -0.005 | -0.005 | -0.005 | -0.005 | -0.005 | -0.005 | -0.004 | -0.003 | -0.003 | -0.002 | -0.001 | -0.001 | 0 | 0 | 0 | -0.001 | -0.002 | -0.003 | -0.004 | -0.006 | -0.007 | -0.009 | -0.010 | -0.010 | -0.010 | -0.010 | -0.010 | -0.009 | -0.007 | -0.006 | -0.004 | -0.003 | -0.002 | -0.001 | 0 |
| * DEFLECTION DUE TO WEIGHT OF SLAB | 0 | -0.004 | -0.007 | -0.010 | -0.013 | -0.015 | -0.016 | -0.017 | -0.017 | -0.017 | -0.016 | -0.014 | -0.013 | -0.010 | -0.008 | -0.006 | -0.004 | -0.002 | 0 | 0 | 0 | -0.002 | -0.005 | -0.009 | -0.014 | -0.019 | -0.023 | -0.027 | -0.030 | -0.032 | -0.033 | -0.032 | -0.030 | -0.027 | -0.024 | -0.019 | -0.014 | -0.009 | -0.005 | -0.002 | 0 |
| DEFLECTION DUE TO WEIGHT OF BARRIER RAIL | 0 | 0 | 0 | 0 | -0.001 | -0.001 | -0.001 | -0.001 | -0.001 | -0.001 | -0.001 | -0.001 | -0.001 | -0.001 | 0 | 0 | 0 | 0 | 0 | 0 | 0 | 0 | 0 | -0.001 | -0.001 | -0.001 | -0.001 | -0.001 | -0.002 | -0.002 | -0.002 | -0.002 | -0.002 | -0.001 | -0.001 | -0.001 | -0.001 | -0.001 | 0 | 0 | 0 |
| ** TOTAL DEAD LOAD DEFLECTION | 0 | -0.005 | -0.009 | -0.013 | -0.018 | -0.021 | -0.022 | -0.023 | -0.023 | -0.023 | -0.022 | -0.020 | -0.018 | -0.014 | -0.011 | -0.008 | -0.005 | -0.003 | 0 | 0 | 0 | -0.003 | -0.007 | -0.013 | -0.019 | -0.026 | -0.031 | -0.037 | -0.042 | -0.044 | -0.045 | -0.044 | -0.042 | -0.037 | -0.032 | -0.026 | -0.019 | -0.013 | -0.007 | -0.003 | 0 |
| VERTICAL CURVE ORDINATE | 0 | -0.020 | -0.038 | -0.054 | -0.068 | -0.079 | -0.089 | -0.096 | -0.101 | -0.105 | -0.106 | -0.105 | -0.101 | -0.096 | -0.089 | -0.079 | -0.068 | -0.054 | -0.038 | -0.020 | 0 | 0.009 | 0.018 | 0.027 | 0.036 | 0.045 | 0.054 | 0.062 | 0.071 | 0.080 | 0.089 | 0.098 | 0.106 | 0.110 | 0.108 | 0.102 | 0.091 | 0.076 | 0.055 | 0.030 | 0 |
| ORDINATE DUE TO SUPERELEVATION | 0 | 0 | 0 | 0 | 0 | 0 | 0 | 0 | 0 | 0 | 0 | 0 | 0 | 0 | 0 | 0 | 0 | 0 | 0 | 0 | 0 | 0 | 0 | 0 | 0 | 0 | 0 | 0 | 0 | 0 | 0 | 0 | 0 | 0 | 0 | 0 | 0 | 0 | 0 | 0 | 0 |
| REQUIRED CAMBER | 0 | -15 | -29 | -41 | -50 | -58 | -67 | -73 | -78 | -82 | -84 | -85 | -83 | -82 | -78 | -71 | -63 | -51 | -38 | -20 | 0 | 12 | 25 | 40 | 55 | 71 | 85 | 99 | 113 | 124 | 134 | 142 | 148 | 147 | 140 | 128 | 110 | 89 | 62 | 33 | 0 |

## DEAD LOAD DEFLECTION TABLE FOR INTERIOR GIRDER #3

| | SPAN C | | | | | | | | | | | | | | | | | | | | |
|---|---|---|---|---|---|---|---|---|---|---|---|---|---|---|---|---|---|---|---|---|---|
| TWENTIETH POINTS | 0 | 0.05 | 0.10 | 0.15 | 0.20 | 0.25 | 0.30 | 0.35 | 0.40 | 0.45 | 0.50 | 0.55 | 0.60 | 0.65 | 0.70 | 0.75 | 0.80 | 0.85 | 0.90 | 0.95 | 0 |
| DEFLECTION DUE TO WEIGHT OF GIRDER | 0 | 0 | 0 | -0.001 | -0.001 | -0.002 | -0.002 | -0.003 | -0.004 | -0.004 | -0.005 | -0.005 | -0.005 | -0.005 | -0.005 | -0.004 | -0.004 | -0.003 | -0.002 | -0.001 | 0 |
| * DEFLECTION DUE TO WEIGHT OF SLAB | 0 | 0 | 0 | -0.002 | -0.003 | -0.005 | -0.008 | -0.010 | -0.012 | -0.014 | -0.015 | -0.016 | -0.017 | -0.016 | -0.016 | -0.014 | -0.012 | -0.010 | -0.007 | -0.003 | 0 |
| DEFLECTION DUE TO WEIGHT OF BARRIER RAIL | 0 | 0 | 0 | 0 | 0 | 0 | 0 | -0.001 | -0.001 | -0.001 | -0.001 | -0.001 | -0.001 | -0.001 | -0.001 | -0.001 | -0.001 | 0 | 0 | 0 | 0 |
| ** TOTAL DEAD LOAD DEFLECTION | 0 | 0 | 0 | -0.003 | -0.004 | -0.007 | -0.010 | -0.014 | -0.017 | -0.019 | -0.021 | -0.022 | -0.023 | -0.022 | -0.022 | -0.019 | -0.017 | -0.013 | -0.009 | -0.004 | 0 |
| VERTICAL CURVE ORDINATE | 0 | 0.021 | 0.039 | 0.054 | 0.067 | 0.076 | 0.083 | 0.088 | 0.089 | 0.088 | 0.084 | 0.078 | 0.069 | 0.061 | 0.052 | 0.044 | 0.035 | 0.026 | 0.018 | 0.009 | 0 |
| ORDINATE DUE TO SUPERELEVATION | 0 | 0 | 0.001 | 0.001 | 0.002 | 0.002 | 0.002 | 0.003 | 0.003 | 0.004 | 0.004 | 0.004 | 0.005 | 0.005 | 0.005 | 0.006 | 0.006 | 0.007 | 0.004 | 0.002 | 0 |
| REQUIRED CAMBER | 0 | 21 | 40 | 58 | 73 | 85 | 95 | 105 | 109 | 111 | 109 | 104 | 97 | 88 | 79 | 69 | 58 | 46 | 31 | 15 | 0 |

## DEAD LOAD DEFLECTION TABLE FOR EXTERIOR GIRDER #4

| | SPAN A | | | | | | | | | | | | | | | | | | | | | SPAN B | | | | | | | | | | | | | | | | | | | | | | | |
|---|---|---|---|---|---|---|---|---|---|---|---|---|---|---|---|---|---|---|---|---|---|---|---|---|---|---|---|---|---|---|---|---|---|---|---|---|---|---|---|---|---|---|---|---|
| TWENTIETH POINTS | 0 | 0.05 | 0.10 | 0.15 | 0.20 | 0.25 | 0.30 | 0.35 | 0.40 | 0.45 | 0.50 | 0.55 | 0.60 | 0.65 | 0.70 | 0.75 | 0.80 | 0.85 | 0.90 | 0.95 | 0 | 0.05 | 0.10 | 0.15 | 0.20 | 0.25 | 0.30 | 0.35 | 0.40 | 0.45 | 0.50 | 0.55 | 0.60 | 0.65 | 0.70 | 0.75 | 0.80 | 0.85 | 0.90 | 0.95 | 0 |
| DEFLECTION DUE TO WEIGHT OF GIRDER | 0 | -0.001 | -0.003 | -0.004 | -0.005 | -0.006 | -0.006 | -0.007 | -0.007 | -0.006 | -0.006 | -0.005 | -0.005 | -0.004 | -0.003 | -0.002 | -0.001 | -0.001 | 0 | 0 | 0 | -0.001 | -0.002 | -0.004 | -0.005 | -0.007 | -0.009 | -0.011 | -0.012 | -0.013 | -0.013 | -0.013 | -0.012 | -0.011 | -0.009 | -0.007 | -0.005 | -0.004 | -0.002 | -0.001 | 0 |
| * DEFLECTION DUE TO WEIGHT OF SLAB | 0 | -0.004 | -0.008 | -0.012 | -0.015 | -0.017 | -0.019 | -0.020 | -0.020 | -0.020 | -0.019 | -0.017 | -0.015 | -0.012 | -0.009 | -0.006 | -0.004 | -0.002 | 0 | 0 | 0 | -0.002 | -0.006 | -0.011 | -0.017 | -0.022 | -0.028 | -0.033 | -0.037 | -0.039 | -0.040 | -0.039 | -0.037 | -0.033 | -0.028 | -0.023 | -0.017 | -0.011 | -0.006 | -0.002 | 0 |
| DEFLECTION DUE TO WEIGHT OF BARRIER RAIL | 0 | 0 | 0 | -0.001 | -0.001 | -0.001 | -0.001 | -0.001 | -0.001 | -0.001 | -0.001 | -0.001 | -0.001 | -0.001 | 0 | 0 | 0 | 0 | 0 | 0 | 0 | 0 | 0 | -0.001 | -0.001 | -0.001 | -0.001 | -0.002 | -0.002 | -0.002 | -0.002 | -0.002 | -0.002 | -0.002 | -0.001 | -0.001 | -0.001 | -0.001 | 0 | 0 | 0 |
| ** TOTAL DEAD LOAD DEFLECTION | 0 | -0.005 | -0.011 | -0.017 | -0.021 | -0.024 | -0.026 | -0.028 | -0.028 | -0.027 | -0.026 | -0.023 | -0.021 | -0.017 | -0.012 | -0.008 | -0.005 | -0.003 | 0 | 0 | 0 | -0.003 | -0.008 | -0.016 | -0.023 | -0.030 | -0.038 | -0.046 | -0.051 | -0.054 | -0.055 | -0.054 | -0.051 | -0.046 | -0.038 | -0.031 | -0.023 | -0.016 | -0.008 | -0.003 | 0 |
| VERTICAL CURVE ORDINATE | 0 | -0.020 | -0.038 | -0.054 | -0.068 | -0.079 | -0.089 | -0.096 | -0.101 | -0.105 | -0.106 | -0.105 | -0.101 | -0.096 | -0.089 | -0.079 | -0.068 | -0.054 | -0.038 | -0.020 | 0 | 0.009 | 0.018 | 0.027 | 0.036 | 0.045 | 0.054 | 0.062 | 0.071 | 0.080 | 0.089 | 0.098 | 0.106 | 0.110 | 0.108 | 0.102 | 0.091 | 0.076 | 0.055 | 0.030 | 0 |
| ORDINATE DUE TO SUPERELEVATION | 0 | 0 | 0 | 0 | 0 | 0 | 0 | 0 | 0 | 0 | 0 | 0 | 0 | 0 | 0 | 0 | 0 | 0 | 0 | 0 | 0 | 0 | 0 | 0 | 0 | 0 | 0 | 0 | 0 | 0 | 0 | 0 | 0 | 0 | 0 | 0 | 0 | 0 | 0 | 0 | 0 |
| REQUIRED CAMBER | 0 | -15 | -27 | -37 | -47 | -55 | -63 | -68 | -73 | -78 | -80 | -82 | -80 | -79 | -77 | -71 | -63 | -51 | -38 | -20 | 0 | 12 | 26 | 43 | 59 | 75 | 92 | 108 | 122 | 134 | 144 | 152 | 157 | 156 | 146 | 133 | 114 | 92 | 63 | 33 | 0 |

## DEAD LOAD DEFLECTION TABLE FOR EXTERIOR GIRDER #4

| | SPAN C | | | | | | | | | | | | | | | | | | | | |
|---|---|---|---|---|---|---|---|---|---|---|---|---|---|---|---|---|---|---|---|---|---|
| TWENTIETH POINTS | 0 | 0.05 | 0.10 | 0.15 | 0.20 | 0.25 | 0.30 | 0.35 | 0.40 | 0.45 | 0.50 | 0.55 | 0.60 | 0.65 | 0.70 | 0.75 | 0.80 | 0.85 | 0.90 | 0.95 | 0 |
| DEFLECTION DUE TO WEIGHT OF GIRDER | 0 | 0 | 0 | -0.001 | -0.001 | -0.002 | -0.003 | -0.004 | -0.004 | -0.005 | -0.006 | -0.006 | -0.006 | -0.006 | -0.006 | -0.005 | -0.004 | -0.004 | -0.002 | -0.001 | 0 |
| * DEFLECTION DUE TO WEIGHT OF SLAB | 0 | 0.001 | 0 | -0.001 | -0.003 | -0.006 | -0.008 | -0.011 | -0.013 | -0.016 | -0.017 | -0.019 | -0.019 | -0.019 | -0.018 | -0.016 | -0.014 | -0.011 | -0.008 | -0.004 | 0 |
| DEFLECTION DUE TO WEIGHT OF BARRIER RAIL | 0 | 0 | 0 | 0 | 0 | 0 | 0 | -0.001 | -0.001 | -0.001 | -0.001 | -0.001 | -0.001 | -0.001 | -0.001 | -0.001 | -0.001 | -0.001 | 0 | 0 | 0 |
| ** TOTAL DEAD LOAD DEFLECTION | 0 | 0.001 | 0 | -0.002 | -0.004 | -0.008 | -0.011 | -0.016 | -0.018 | -0.022 | -0.024 | -0.026 | -0.026 | -0.026 | -0.025 | -0.022 | -0.019 | -0.016 | -0.010 | -0.005 | 0 |
| VERTICAL CURVE ORDINATE | 0 | 0.021 | 0.039 | 0.054 | 0.066 | 0.076 | 0.083 | 0.088 | 0.090 | 0.089 | 0.085 | 0.079 | 0.070 | 0.062 | 0.053 | 0.045 | 0.036 | 0.028 | 0.018 | 0.009 | 0 |
| ORDINATE DUE TO SUPERELEVATION | 0 | 0.002 | 0.004 | 0.005 | 0.007 | 0.009 | 0.010 | 0.012 | 0.014 | 0.016 | 0.017 | 0.019 | 0.021 | 0.023 | 0.024 | 0.026 | 0.028 | 0.030 | 0.020 | 0.010 | 0 |
| REQUIRED CAMBER | 0 | 22 | 43 | 61 | 77 | 93 | 104 | 116 | 122 | 127 | 126 | 124 | 117 | 111 | 102 | 93 | 83 | 74 | 48 | 24 | 0 |

* INCLUDES SLAB, BUILDUPS & STAY-IN-PLACE FORMS.
ALL VALUES ARE SHOWN IN METERS, EXCEPT " REQUIRED CAMBER ", WHICH IS GIVEN IN MILLIMETERS.

SIGN CONVENTION FOR DEAD LOAD DEFLECTION + 0 −

** MODIFIED TO ACCOUNT FOR CAMBER LOSS DUE TO HEAT-CURVING

NORTH CAROLINA PROFESSIONAL SEAL 20211 ENGINEER THOMAS G. PAYNE
Thomas G. Payne
10/18/06

PROJECT NO. B-1443
MITCHELL/YANCEY COUNTY
STATION 12+94.300 -L-

SHEET 2 OF 2

STATE OF NORTH CAROLINA
DEPARTMENT OF TRANSPORTATION
RALEIGH

SUPERSTRUCTURE

DEAD LOAD DEFLECTIONS

| REVISIONS | | | | | | SHEET NO. |
|---|---|---|---|---|---|---|
| NO. | BY: | DATE: | NO. | BY: | DATE: | S-67 |
| 1 | | | 3 | | | TOTAL SHEETS |
| 2 | | | 4 | | | 91 |

DRAWN BY : Keith D. Layne DATE : 2-26-03
CHECKED BY : S. H. SOCKWELL DATE : 1-12-04

18-OCT-2006 11:48
F:\Structures\b1443\Final\B1443_sd_dt_01.dgn
klayne

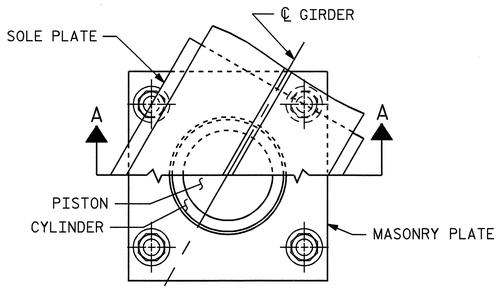


CUT-AWAY PLAN

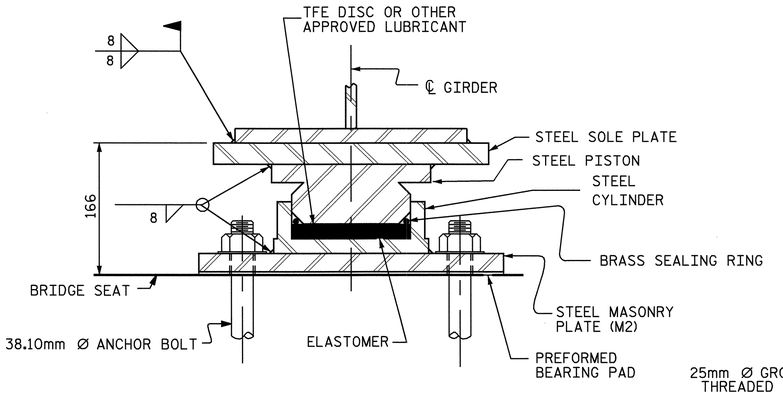


SECTION A-A

## FIXED POT BEARING DETAILS

( PB2 - 4 REQ'D. )
( PB3 - 4 REQ'D. )

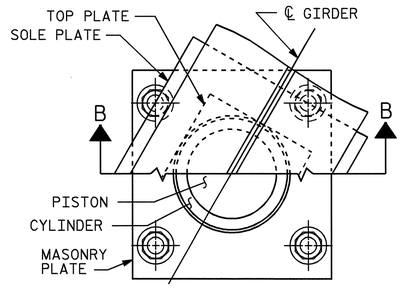


CUT-AWAY PLAN

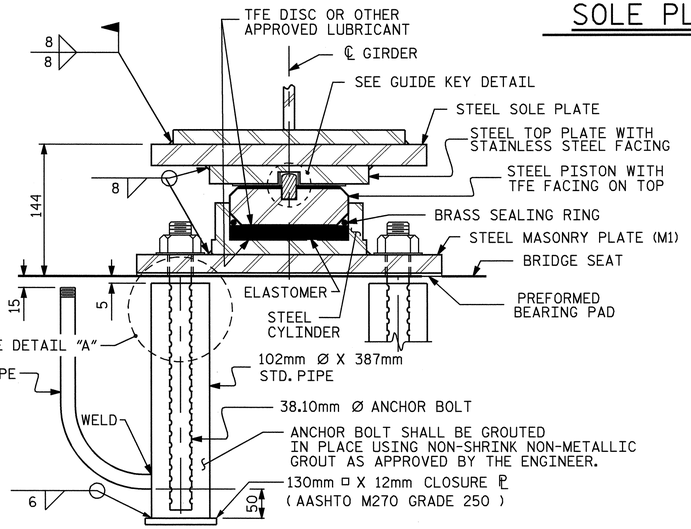


SECTION B-B

## EXPANSION POT BEARING DETAILS

( PB1 - 4 REQ'D. )
( PB4 - 4 REQ'D. )

INCREASING STATIONS

END BENT 1 + 0.305 % SLOPE
BENT 1 + 2.781 % SLOPE
BENT 2 + 0.870 % SLOPE
END BENT 2 - 1.008 % SLOPE

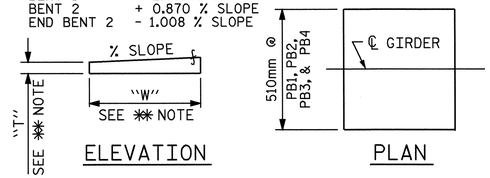


✱✱ NOTE:
DIMENSIONS "W" AND "T" ARE TO BE DETERMINED BY THE MANUFACTURER.

## SOLE PLATE DETAILS

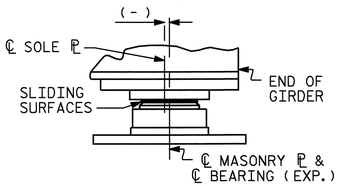


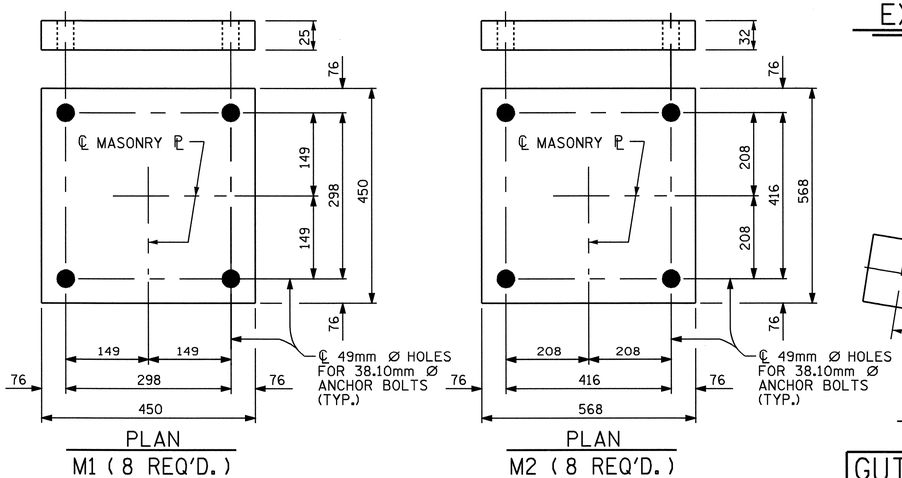


## MASONRY PLATE DETAILS

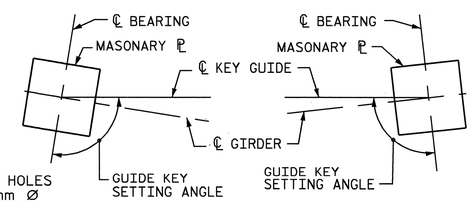


## GUIDE KEY SETTING ANGLES

| GIRDER | POT BEARING PB1 | POT BEARING PB4 |
|---|---|---|
| #1 | 99°-22'-04" | 83°-44'-18" |
| #2 | 99°-22'-04" | 83°-41'-55" |
| #3 | 99°-22'-04" | 83°-39'-40" |
| #4 | 99°-22'-04" | 83°-37'-32" |

## TABLE FOR PLATE SETTING DATA

( EXPANSION POT BEARINGS )

| TEMPERATURE AT TIME OF SETTING | 0° C | 16° C | 32° C | ✱ |
|---|---|---|---|---|
| END BENT #1 | -10mm | 0 | 10mm | 6mm |
| END BENT #2 | -10mm | 0 | 10mm | 6mm |

✱CORRECTION FOR END ROTATION DUE TO WEIGHT OF SLAB AND COMPOSITE DEAD LOAD.

## TEMPERATURE SETTING DETAIL

## TABLE FOR LOADS AND MOVEMENTS

| BEARING | LOCATION | VERTICAL LOAD ( kN ) | | | LATERAL LOAD ( kN ) | TOTAL MOVEMENT ( mm ) |
|---|---|---|---|---|---|---|
| | | DEAD | LIVE | TOTAL | | |
| PB1 (EXP.) | END BENT #1 | 400 | 257 | 657 | 66 | 46 |
| PB2 (FIXED) | BENT #1 | 1491 | 554 | 2045 | 205 | 0 |
| PB3 (FIXED) | BENT #2 | 1484 | 553 | 2037 | 204 | 0 |
| PB4 (EXP.) | END BENT #2 | 371 | 279 | 650 | 65 | 46 |

## NOTES

FOR POT BEARINGS, SEE SPECIAL PROVISIONS.

AT ALL POINTS OF SUPPORT IN ALL SPANS, NUTS FOR ANCHOR BOLTS SHALL BE TIGHTENED FINGER TIGHT AND GIVEN AN ADDITIONAL 1/4 TURN. THE THREAD OF THE NUT AND BOLT SHALL THEN BE BURRED WITH A SHARP POINTED TOOL.

WHEN WELDING THE SOLE PLATE TO THE GIRDER, USE TEMPERATURE INDICATING WAX PENS, OR OTHER SUITABLE MEANS, TO ENSURE THAT THE TEMPERATURE OF THE BEARING DOES NOT EXCEED 121°C. TEMPERATURES ABOVE THIS MAY DAMAGE THE TFE OR ELASTOMER.

AFTER BEARING ASSEMBLY IS IN PLACE AND ANCHOR BOLTS HAVE BEEN FINALLY POSITIONED. THEY SHALL BE GROUTED IN PLACE AS SHOWN.

THE CLOSURE PLATE AND STANDARD PIPE FOR THE PIPE SLEEVE ASSEMBLY NEED NOT BE GALVANIZED.

SOLE PLATES SHOULD BE WELDED TO BEAM FLANGES AND ANCHOR BOLTS SHOULD BE GROUTED BEFORE FALSEWORK IS PLACED.

ALL SURFACES OF BEARING PLATES SHALL BE SMOOTH AND STRAIGHT.

FOR THERMAL SPRAYED COATINGS (METTALLIZATION), SEE SPECIAL PROVISIONS.

THE CONTRACTOR MAY SUBSTITUTE DISC BEARINGS FOR THE POT BEARINGS SHOWN. FOR OPTIONAL DISC BEARINGS, SEE SPECIAL PROVISIONS.

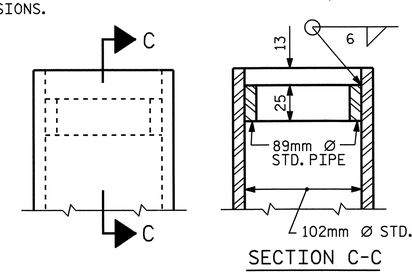


SECTION C-C

## DETAIL "A"

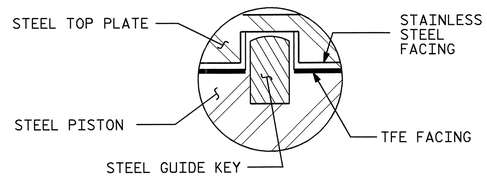


## GUIDE KEY DETAIL

NORTH CAROLINA PROFESSIONAL SEAL 2021I ENGINEER THOMAS G. PAYNE
10/18/06

PROJECT NO. B-1443
MITCHELL/YANCEY COUNTY
STATION: 12+94.300 -L-

STATE OF NORTH CAROLINA
DEPARTMENT OF TRANSPORTATION
RALEIGH

STANDARD

# POT BEARING DETAILS

| REVISIONS | | | | | | SHEET NO. |
|---|---|---|---|---|---|---|
| NO. | BY: | DATE: | NO. | BY: | DATE: | S-68 |
| 1 | | | 3 | | | TOTAL SHEETS |
| 2 | | | 4 | | | 91 |

ASSEMBLED BY : Keith D. Layne DATE : 02-27-03
CHECKED BY : S. H. SOCKWELL DATE : 1-12-04

DRAWN BY : RWW 8/99
CHECKED BY : LES 8/99

ADDED 8/16/99
REV. 10/17/00 RWW/LES
REV. 7/10/01 LES/RWW

18-OCT-2006 11:48
F:\Structures\b1443\Final\B1443_sd_pb_01.dgn
klayne

PB1SM.STD

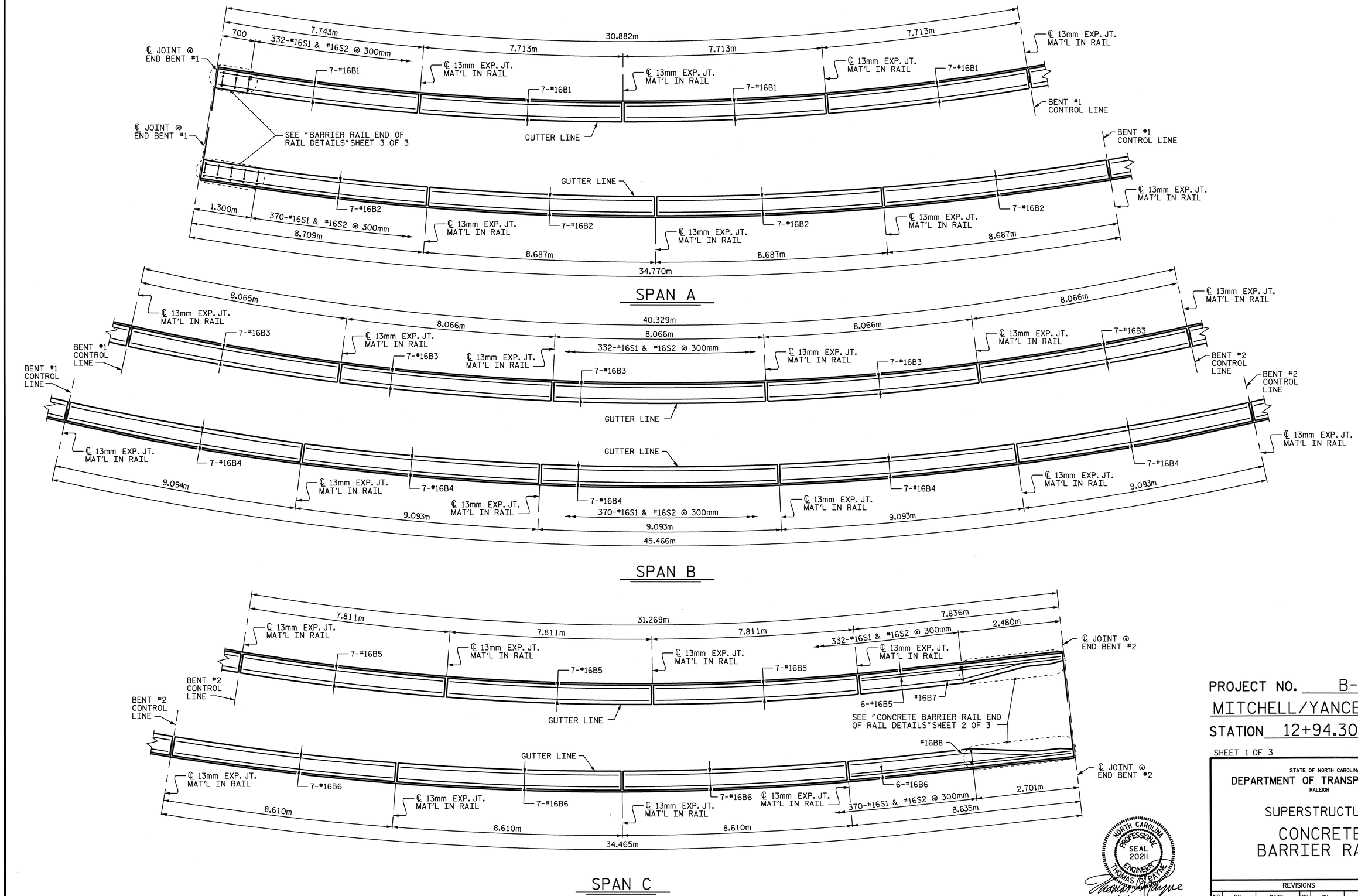


PROJECT NO. B-1443

MITCHELL/YANCEY COUNTY

STATION 12+94.300 -L-

SHEET 1 OF 3

STATE OF NORTH CAROLINA
DEPARTMENT OF TRANSPORTATION
RALEIGH

SUPERSTRUCTURE

CONCRETE BARRIER RAIL

NORTH CAROLINA PROFESSIONAL SEAL 20211 ENGINEER THOMAS G. PAYNE

10/18/06

| REVISIONS | | | | | | SHEET NO. |
|---|---|---|---|---|---|---|
| NO. | BY: | DATE: | NO. | BY: | DATE: | S-69 |
| 1 | | | 3 | | | TOTAL SHEETS |
| 2 | | | 4 | | | 91 |

DRAWN BY : Keith D. Layne DATE : 2-27-03
CHECKED BY : S. H. SOCKWELL DATE : 1-12-04

18-OCT-2006 11:47
F:\Structures\b1443\Final\B1443_sd_cb_01.dgn
klayne

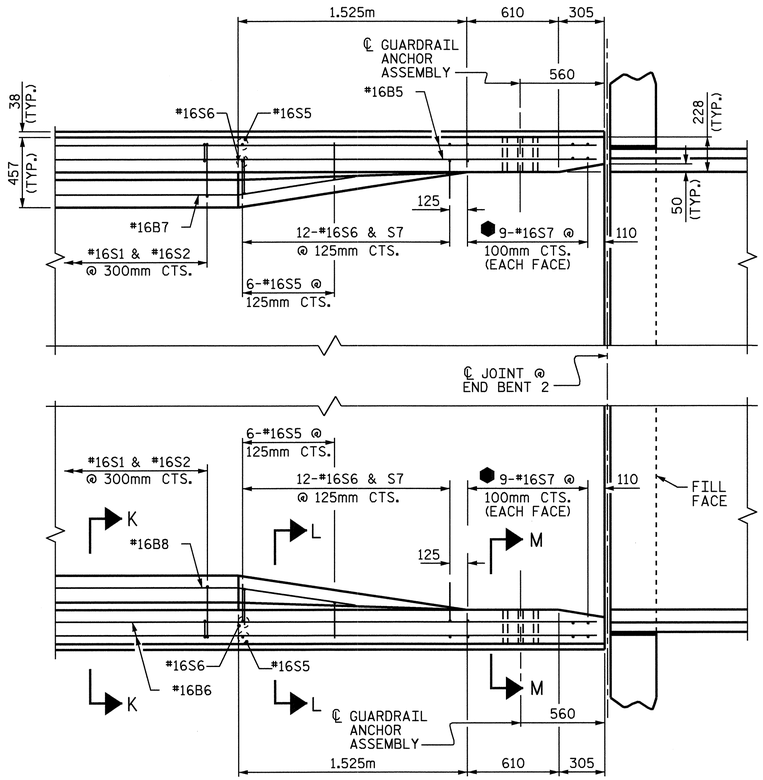


PLAN

● THE REINFORCING STEEL IN THIS AREA SHALL BE INSTALLED, USING AN ADHESIVE ANCHORING SYSTEM. AFTER SAWING THE JOINT. THE YIELD LOAD FOR THE #16S7 BARS IS 82.7 kN. FIELD TESTING FOR THE ADHESIVE BONDING SYSTEM IS NOT REQUIRED.

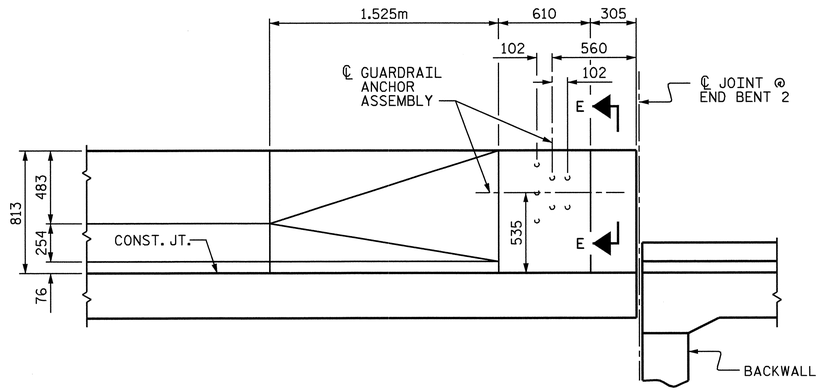


ELEVATION

## END OF RAIL DETAILS

END OF RAIL DETAILS AT END BENT 2

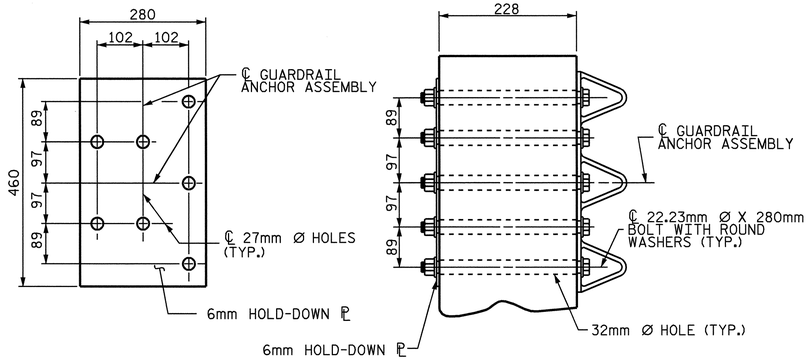


PLAN

SECTION E-E

## GUARDRAIL ANCHOR ASSEMBLY DETAILS

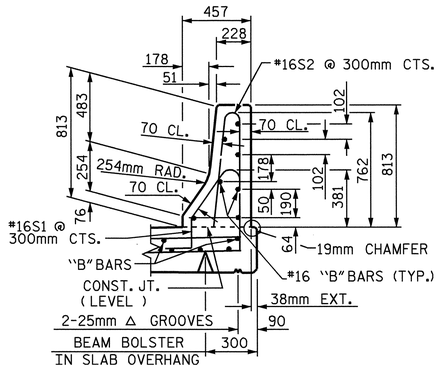


SECTION K-K

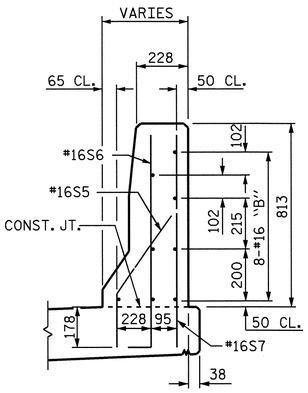


SECTION L-L




SKETCH SHOWING POINTS OF ATTACHMENT

✳ INDICATES POINTS OF ATTACHMENT

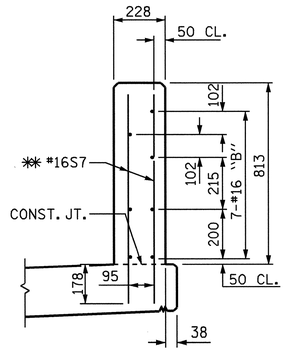


SECTION M-M

✳✳ ADHESIVELY ANCHORED

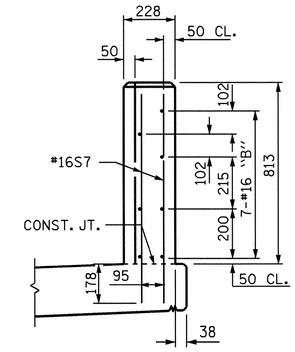


END VIEW

## NOTES

THE GUARDRAIL ANCHOR ASSEMBLY SHALL CONSIST OF A 6mm HOLD DOWN PLATE AND 7 - 22.23mm Ø BOLTS WITH NUTS AND WASHERS.

THE HOLD-DOWN PLATE SHALL CONFORM TO AASHTO M270 GRADE 250. AFTER FABRICATION, THE HOLD-DOWN PLATE SHALL BE GALVANIZED IN ACCORDANCE WITH AASHTO M111.

BOLTS SHALL CONFORM TO THE REQUIREMENTS OF ASTM A307 AND NUTS SHALL CONFORM TO THE REQUIREMENTS OF AASHTO M291M. BOLTS, NUTS AND WASHERS SHALL BE GALVANIZED. AT THE CONTRACTOR'S OPTION, STAINLESS STEEL BOLTS, NUTS AND WASHERS MAY BE USED AS AN ALTERNATE FOR THE 22.23mm Ø GALVANIZED BOLTS, NUTS AND WASHERS. THEY SHALL CONFORM TO OR EXCEED THE MECHANICAL REQUIREMENTS OF ASTM A307. THE USE OF THIS ALTERNATE SHALL BE APPROVED BY THE ENGINEER.

AFTER INSTALLATION, THE EXPOSED THREAD OF THE BOLT SHALL BE BURRED WITH A SHARP POINTED TOOL.

THE COST OF THE GUARDRAIL ANCHOR ASSEMBLIES WITH BOLTS, NUTS AND WASHERS COMPLETE IN PLACE, SHALL BE INCLUDED IN THE LUMP SUM CONTRACT PRICE BID FOR BRIDGE APPROACH SLABS.

THE 32mm Ø HOLES SHALL BE FORMED OR DRILLED WITH A CORE BIT. IMPACT TOOLS WILL NOT BE PERMITTED. ANY CONCRETE DAMAGED BY THIS WORK SHALL BE REPAIRED TO THE SATISFACTION OF THE ENGINEER.

PROJECT NO. B-1443

MITCHELL/YANCEY COUNTY

STATION: 12+94.300 -L-

SHEET 2 OF 3

STATE OF NORTH CAROLINA
DEPARTMENT OF TRANSPORTATION
RALEIGH

# CONCRETE BARRIER RAIL END OF RAIL DETAILS AT END BENT 2

| REVISIONS | | | | | | SHEET NO. |
|---|---|---|---|---|---|---|
| NO. | BY: | DATE: | NO. | BY: | DATE: | S-70 |
| 1 | | | 3 | | | TOTAL SHEETS |
| 2 | | | 4 | | | 91 |

NORTH CAROLINA PROFESSIONAL SEAL 20211 ENGINEER THOMAS G. PAYNE
11/28/06

| | |
|---|---|
| ASSEMBLED BY : Keith D. Layne | DATE : 11-16-04 |
| CHECKED BY : S. H. SOCKWELL | DATE : 11-16-04 |
| DRAWN BY : RWW 8/01 | REV. 5/7/03R RWW/JTE |
| CHECKED BY : LES 8/01 | |

28-NOV-2006 08:06
F:\Structures\bl443\Final\Bl443_sd_cb_01.dgn
klayne

# NOTES

THE BARRIER RAIL IN EACH CONTINUOUS UNIT SHALL NOT BE CAST UNTIL ALL SLAB CONCRETE IN THAT UNIT HAS BEEN CAST AND HAS REACHED A MINIMUM COMPRESSIVE STRENGTH OF 20.7 MPa.

THE JOINT IN THE DECK SHALL BE SAWED PRIOR TO THE CASTING OF BARRIER RAIL.

ALL REINFORCING STEEL IN BARRIER RAILS SHALL BE EPOXY COATED.

THE #16S3, #16S4 AND #16S7 BARS SHALL BE INSTALLED, USING AN ADHESIVE ANCHORING SYSTEM, AFTER SAWING THE JOINT. THE YIELD LOAD FOR THE #16S3, #16S4, AND #16S7 BARS IS 82.7 kN. FIELD TESTING FOR THE ADHESIVE BONDING SYSTEM IS NOT REQUIRED.

VERTICAL GROOVED CONTRACTION JOINTS, 12mm IN DEPTH, SHALL BE TOOLED IN ALL EXPOSED FACES OF THE BARRIER RAIL AND IN ACCORDANCE WITH ARTICLE 825-10(B) OF THE STANDARD SPECIFICATIONS. A JOINT SHALL BE LOCATED AT EACH THIRD POINT BETWEEN BARRIER RAIL EXPANSION JOINTS. ONLY ONE JOINT IS REQUIRED AT MIDPOINT OF BARRIER RAIL SEGMENTS LESS THAN 6.1m IN LENGTH AND NO JOINTS ARE REQUIRED FOR THOSE SEGMENTS LESS THAN 3.5m IN LENGTH.

## BAR TYPES

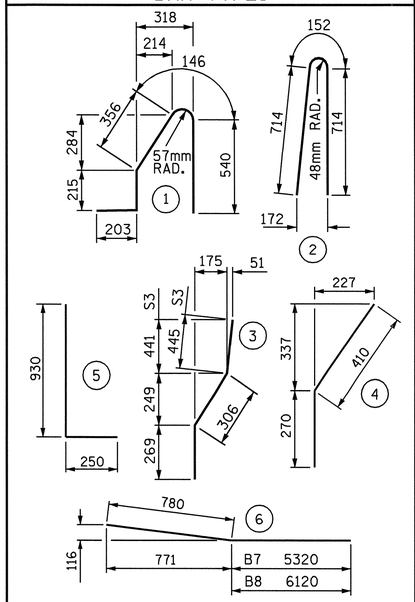


ALL BAR DIMENSIONS ARE OUT TO OUT

## BILL OF MATERIAL

FOR CONCRETE BARRIER RAIL ONLY

| BAR | NO. | SIZE | TYPE | LENGTH | WEIGHT |
|---|---|---|---|---|---|
| ✱S1 | 702 | #16 | 1 | 1460 | 1591 |
| ✱S2 | 702 | #16 | 2 | 1580 | 1721 |
| ✱S3 | 6 | #16 | 3 | 1020 | 9 |
| ✱S4 | 6 | #16 | STR. | 960 | 9 |
| ✱S5 | 12 | #16 | 4 | 680 | 13 |
| ✱S6 | 24 | #16 | 5 | 1180 | 44 |
| ✱S7 | 60 | #16 | STR. | 940 | 88 |
| ✱B1 | 28 | #16 | STR. | 7600 | 330 |
| ✱B2 | 28 | #16 | STR. | 8560 | 372 |
| ✱B3 | 35 | #16 | STR. | 7940 | 431 |
| ✱B4 | 35 | #16 | STR. | 8960 | 487 |
| ✱B5 | 27 | #16 | STR. | 7700 | 323 |
| ✱B6 | 27 | #16 | STR. | 8480 | 355 |
| ✱B7 | 1 | #16 | 6 | 6100 | 9 |
| ✱B8 | 1 | #16 | 6 | 6900 | 11 |
| ✱EPOXY COATED REINFORCING STEEL ( kg ) | | | | | 5793 |
| CLASS AA CONCRETE ($m^3$) | | | | | 54.5 |
| CONCRETE BARRIER RAIL (m) | | | | | 217.2 |

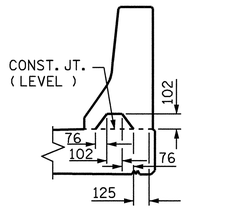


SECTION S-S

AT DAM IN OPEN JOINT
( THIS IS TO BE USED ONLY WHEN SLIP FORM IS USED )

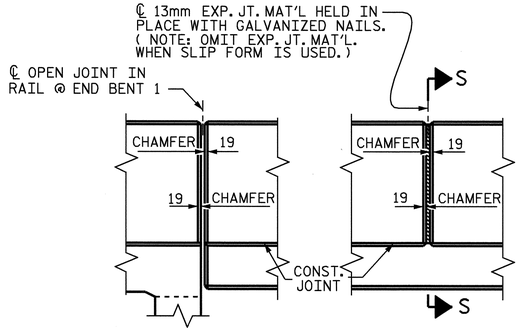


ELEVATION AT EXPANSION JOINTS

# BARRIER RAIL DETAILS

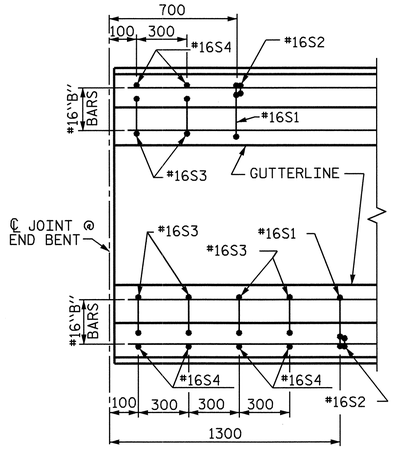


PLAN

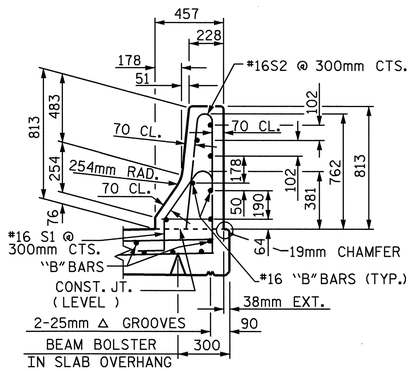


SECTION THRU RAIL

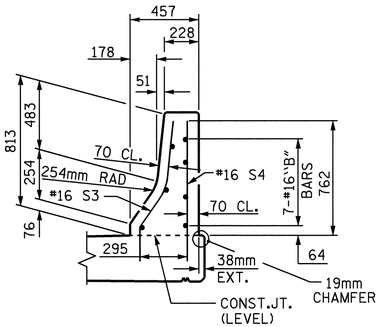


END VIEW

# END OF RAIL DETAILS

AT END BENT 1

PROJECT NO. B-1443

MITCHELL/YANCEY COUNTY

STATION: 12+94.300 -L-

SHEET 3 OF 3

STATE OF NORTH CAROLINA
DEPARTMENT OF TRANSPORTATION
RALEIGH

STANDARD

CONCRETE BARRIER RAIL

| REVISIONS | | | | | | SHEET NO. |
|---|---|---|---|---|---|---|
| NO. | BY: | DATE: | NO. | BY: | DATE: | S-71 |
| 1 | | | 3 | | | TOTAL SHEETS |
| 2 | | | 4 | | | 91 |

STD. No. CBR1SM

NORTH CAROLINA PROFESSIONAL SEAL 20211 ENGINEER THOMAS G. PAYNE
Thomas G. Payne
11/28/06

| | | |
|---|---|---|
| ASSEMBLED BY : Keith D. Layne | DATE : 02-27-03 | |
| CHECKED BY : S. H. SOCKWELL | DATE : 1-12-04 | |
| DRAWN BY : ARB 5/87 | REV. 7/17/98 | RWW/LES |
| CHECKED BY : SJD 9/87 | REV. 8/16/99 | RWW/LES |
| | REV. 10/17/00R | RWW/LES |

28-NOV-2006 08:08
F:\Structures\b1443\Final\B1443_sd_cb_01.dgn
klayne

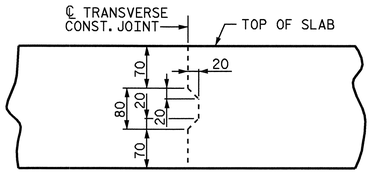


## TRANSVERSE CONSTRUCTION JOINT DETAIL

NOTE: REINFORCING STEEL IN SLAB NOT SHOWN.
LONGITUDINAL REINFORCING STEEL SHALL BE CONTINUOUS THRU JOINT.

| SUPERSTRUCTURE REINFORCING STEEL LENGTHS ARE BASED ON THE FOLLOWING MINIMUM SPLICE LENGTHS | | | | | |
|---|---|---|---|---|---|
| BAR SIZE | SUPERSTRUCTURE EXCEPT APPROACH SLABS, PARAPET, AND BARRIER RAIL | | APPROACH SLABS | | PARAPET AND BARRIER RAIL |
| | EPOXY COATED | UNCOATED | EPOXY COATED | UNCOATED | |
| #13 | 610 | 540 | 610 | 540 | 840 |
| #16 | 770 | 660 | 770 | 660 | 1050 |
| #19 | 920 | 790 | 1190 | 790 | 1330 |
| #22 | 1580 | 1060 | | | |
| #25 | 2080 | 1390 | | | |

| GROOVING BRIDGE FLOORS | |
|---|---|
| BRIDGE DECK | 1089.4 $m^2$ |
| APPROACH SLABS | 97.4 $m^2$ |
| TOTAL | 1186.8 $m^2$ |

## REINFORCING BAR SCHEDULE

SPAN A-C

| BAR | NO. | SIZE | TYPE | LENGTH | WEIGHT |
|---|---|---|---|---|---|
| ✱A1 | 764 | 16 | STR. | 11780 | 13968 |
| A2 | 764 | 16 | STR. | 11780 | 13968 |
| ✱B1 | 434 | 19 | STR. | 17040 | 16529 |
| B2 | 329 | 16 | STR. | 16940 | 8088 |
| ✱G1 | 2 | 16 | STR. | 11740 | 36 |
| ✱K1 | 8 | 16 | 1 | 2240 | 28 |
| ✱K2 | 8 | 16 | 2 | 2540 | 32 |
| ✱K3 | 12 | 16 | STR. | 2720 | 51 |
| ✱S1 | 54 | 13 | 3 | 1100 | 59 |

REINFORCING STEEL (kg) = 22056

✱EPOXY COATED REINFORCING STEEL (kg) = 30703

CLASS AA CONCRETE ($m^3$)
POUR #1 = 56.4
POUR #2 = 139.9
POUR #3 = 145.2
TOTAL = 341.5

BAR TYPES

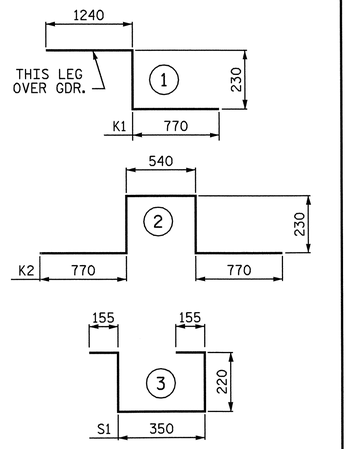


ALL BAR DIMENSIONS ARE OUT TO OUT.

QUANTITIES FOR BARRIER RAIL ARE NOT INCLUDED.

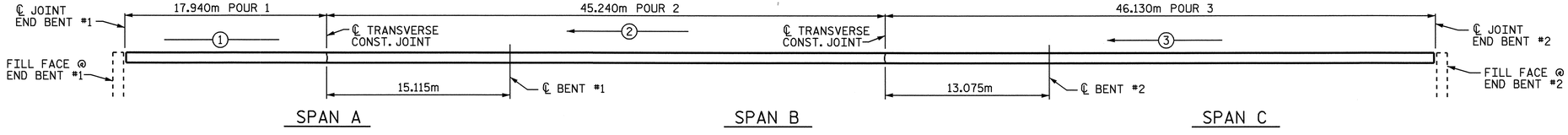


## LAYOUT FOR POURING SEQUENCE OF REINFORCED CONCRETE DECK SLAB

SHOWS DIRECTION OF POUR

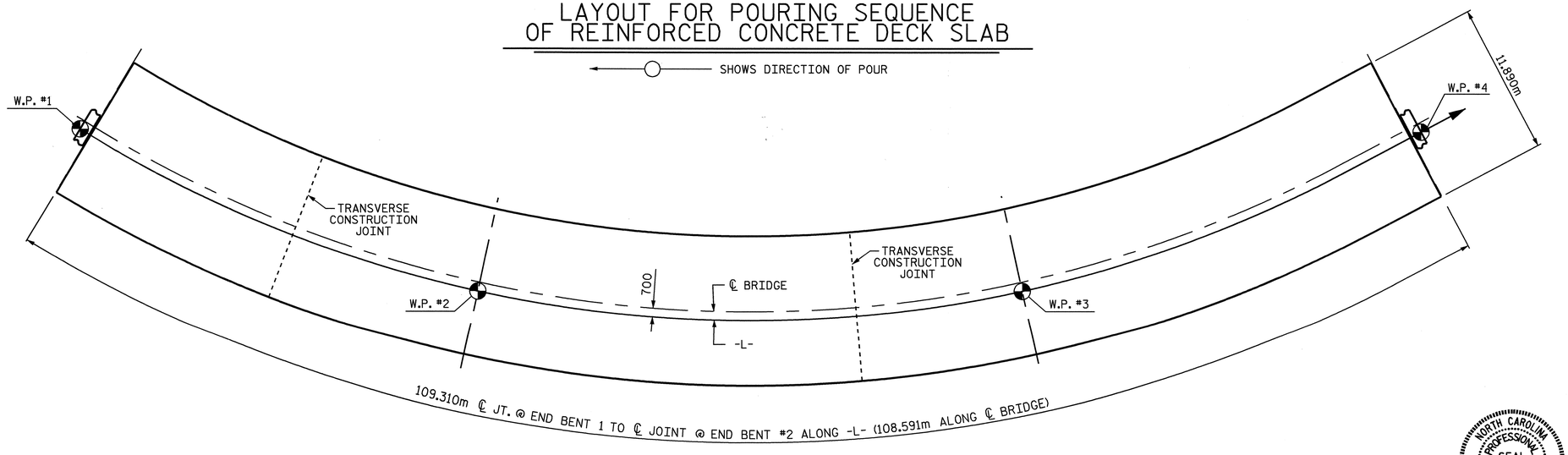


## LAYOUT FOR COMPUTING AREA OF REINFORCED CONCRETE DECK SLAB

AREA CONCRETE DECK SLAB = 1291.1 $m^2$

NORTH CAROLINA PROFESSIONAL SEAL 20211 ENGINEER THOMAS G. LAYNE
10/18/06

PROJECT NO. B-1443
MITCHELL/YANCEY COUNTY
STATION 12+94.300 -L-

STATE OF NORTH CAROLINA
DEPARTMENT OF TRANSPORTATION
RALEIGH

SUPERSTRUCTURE

BILL OF MATERIAL

| REVISIONS | | | | | | SHEET NO. |
|---|---|---|---|---|---|---|
| NO. | BY: | DATE: | NO. | BY: | DATE: | S-72 |
| 1 | | | 3 | | | TOTAL SHEETS |
| 2 | | | 4 | | | 91 |

DRAWN BY : Keith D. Layne DATE : 2-14-03
CHECKED BY : S. H. SOCKWELL DATE : 1-12-04

18-OCT-2006 11:48
F:\Structures\b1443\Final\B1443_sd_ps_01.dgn
klayne

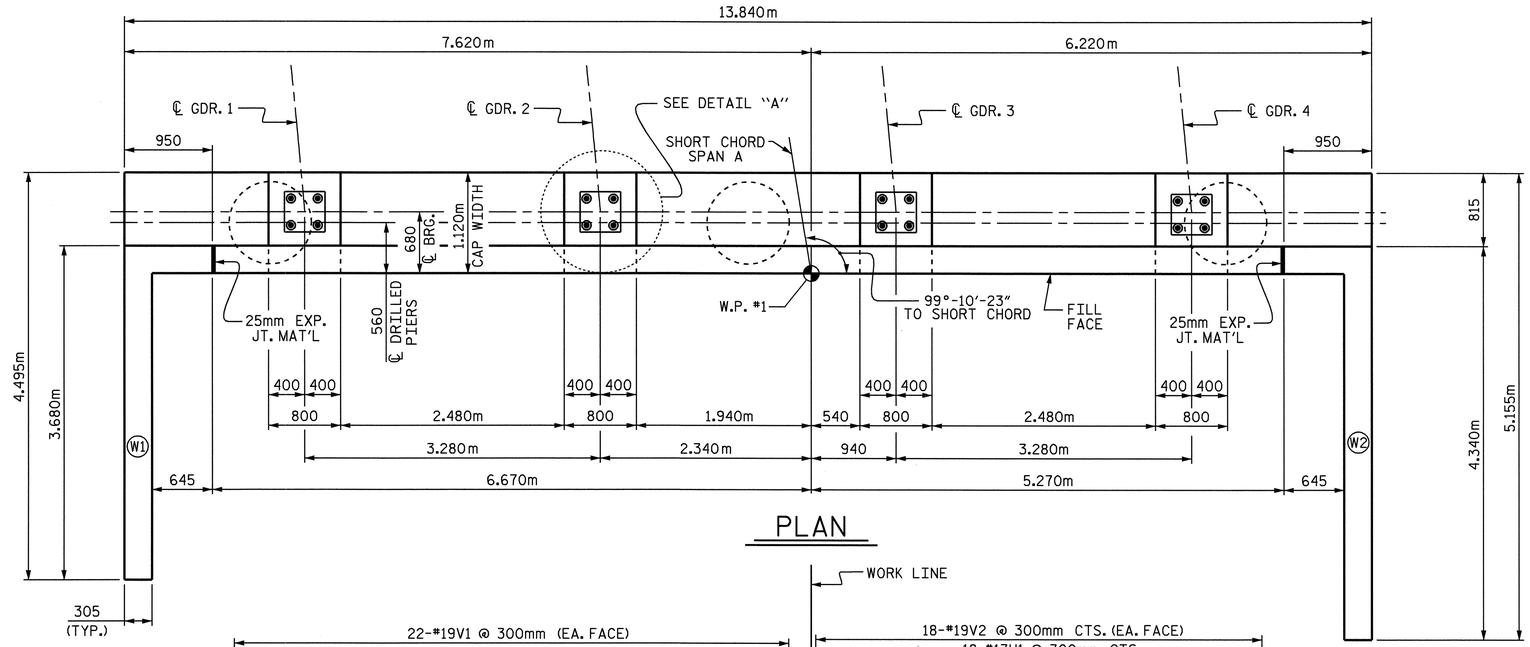


## PLAN

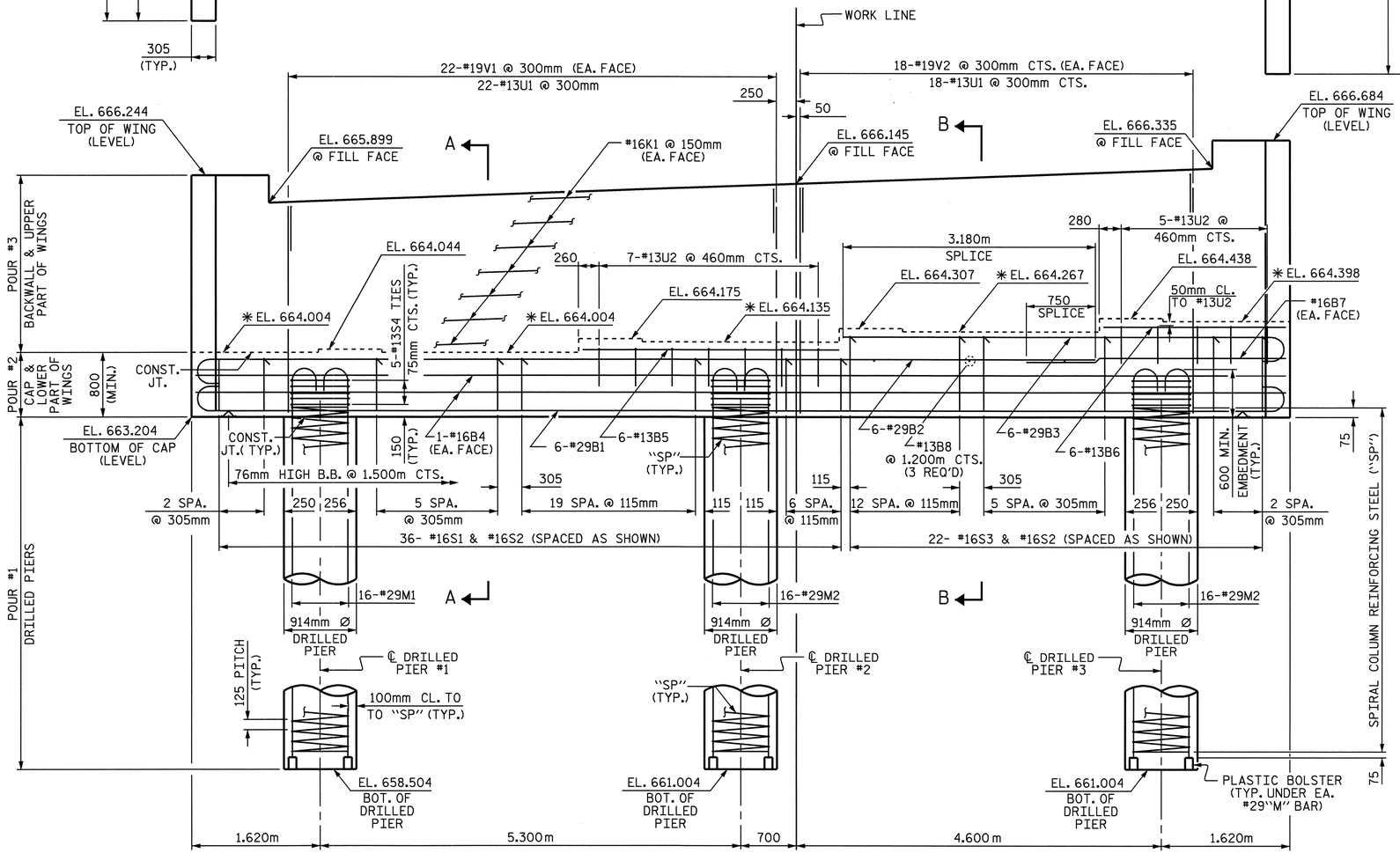


## ELEVATION

## NOTES

STIRRUPS IN CAP MAY BE SHIFTED AS NECESSARY TO CLEAR ANCHOR BOLTS.

HOOKS ON "M" BARS MAY BE TURNED AS NECESSARY FOR PLACING REINFORCING STEEL.

BACKWALL SHALL BE PLACED BEFORE APPLYING THE EPOXY PROTECTIVE COATING.

THE TOP SURFACE AREAS OF THE END BENT CAPS SHALL BE CURED IN ACCORDANCE WITH THE STANDARD SPECIFICATIONS EXCEPT THE MEMBRANE CURING COMPOUND METHOD SHALL NOT BE USED.

THE TOP SURFACE OF THE CAP EXCEPT THE BRIDGE SEAT BUILDUPS SHALL BE SLOPED TRANSVERSELY FROM THE FILL FACE TO THE BACK FACE AT THE RATE OF 2 %.

ALL STEEL IN THE DRILLED PIERS IS INCLUDED IN THE PAY ITEMS FOR "REINFORCING STEEL" AND "SPIRAL COLUMN REINFORCING STEEL".

SPLICING OF THE LONGITUDINAL BARS IN THE DRILLED PIERS WILL NOT BE PERMITTED.

THE CONTRACTOR'S ATTENTION IS CALLED TO THE FACT THAT THE LONGITUDINAL REINFORCEMENT FOR THE DRILLED PIERS IS DETAILED WITH ONE METER OF EXTRA LENGTH.

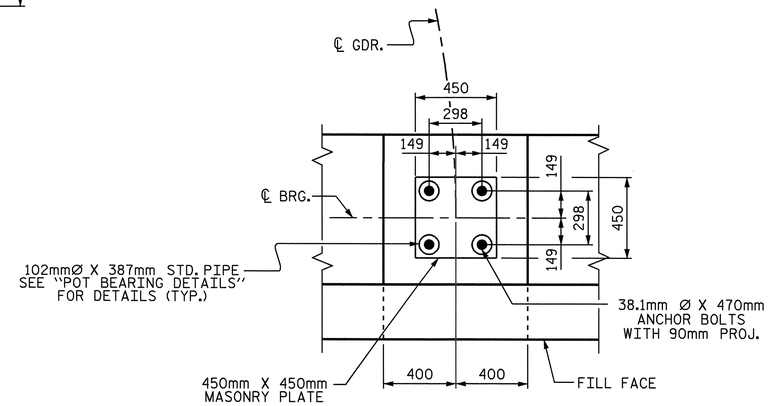


## DETAIL "A"
TYPICAL EACH LOCATION

*SEE SHEET 3 OF 3 FOR LOCATION OF ELEVATION BETWEEN BRIDGE SEAT BUILD-UPS.

PROJECT NO. B-1443
MITCHELL/YANCEY COUNTY
STATION: 12+94.300-L-

SHEET 1 OF 3

STATE OF NORTH CAROLINA
DEPARTMENT OF TRANSPORTATION
RALEIGH

SUBSTRUCTURE
END BENT 1

| REVISIONS | | | | | | SHEET NO. |
|---|---|---|---|---|---|---|
| NO. | BY: | DATE: | NO. | BY: | DATE: | S-73 |
| 1 | | | 3 | | | TOTAL SHEETS |
| 2 | | | 4 | | | 91 |

NORTH CAROLINA PROFESSIONAL SEAL 20211 ENGINEER THOMAS G. PAYNE
Thomas Payne 11/28/06

DRAWN BY : S.H. SOCKWELL DATE : 2/10/04
CHECKED BY : H.A. LOCKLEAR DATE : 6/21/04

28-NOV-2006 08:27
F:\Structures\bl443\Final\B-1443_sd_Ebts_01.dgn
klayne

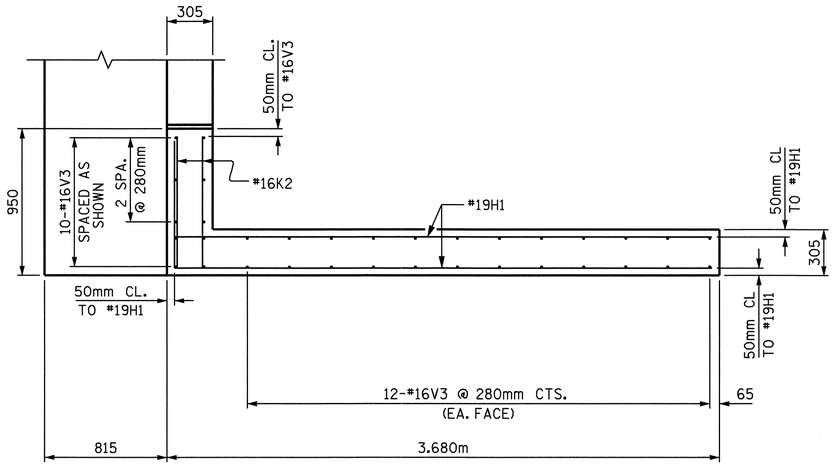


PLAN OF LEFT WING - (W1)

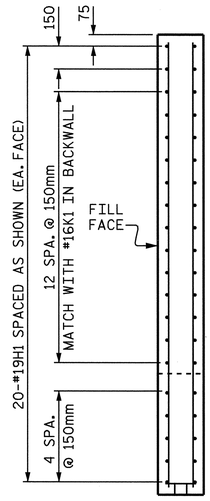


SECTION X-X

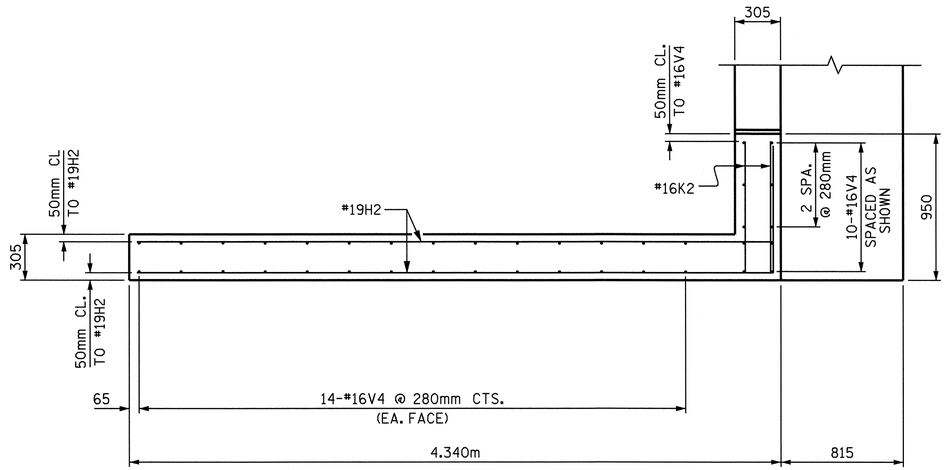


PLAN OF RIGHT WING - (W2)

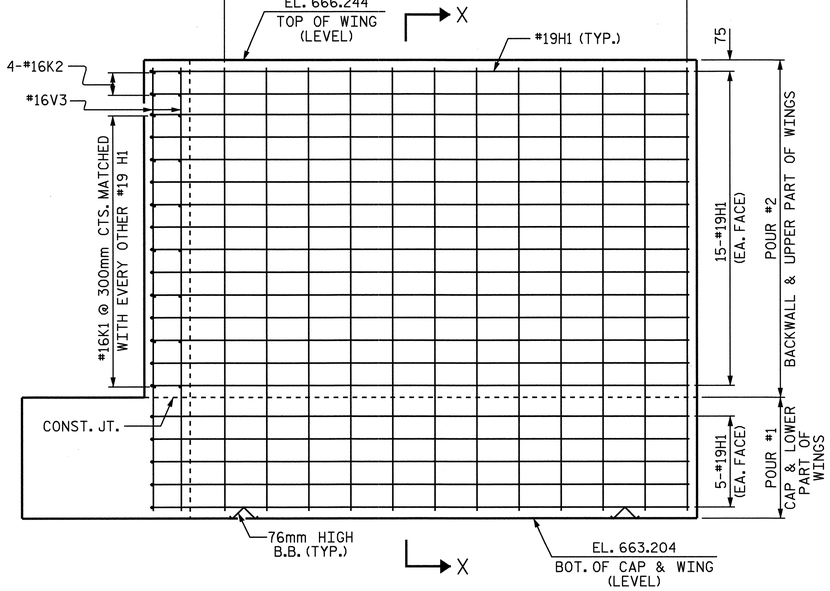


ELEVATION OF LEFT WING - (W1)

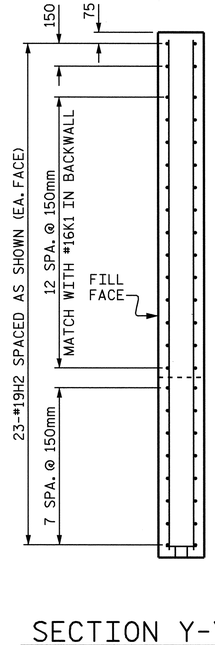


SECTION Y-Y

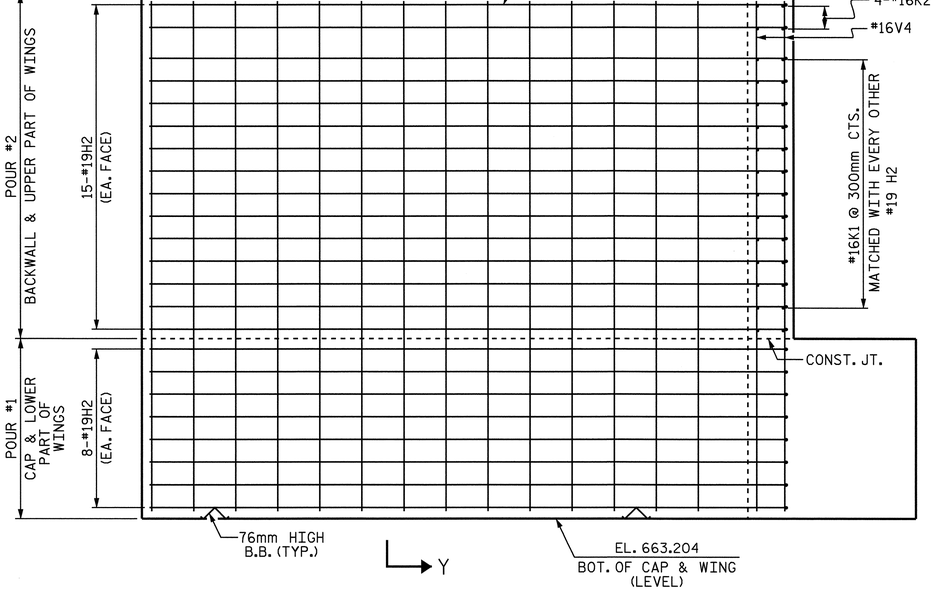


ELEVATION OF RIGHT WING - (W2)

PROJECT NO. B-1443
MITCHELL/YANCEY COUNTY
STATION: 12+94.300-L-

SHEET 2 OF 3

STATE OF NORTH CAROLINA
DEPARTMENT OF TRANSPORTATION
RALEIGH

SUBSTRUCTURE
END BENT 1

| REVISIONS | | | | | |
|---|---|---|---|---|---|
| NO. | BY: | DATE: | NO. | BY: | DATE: |
| 1 | | | 3 | | |
| 2 | | | 4 | | |

SHEET NO. S-74
TOTAL SHEETS 91

NORTH CAROLINA PROFESSIONAL SEAL 20211 ENGINEER THOMAS G. PAYNE
11/28/06

DRAWN BY : S.H. SOCKWELL DATE : 2/10/04
CHECKED BY : H.A. LOCKLEAR DATE : 6/21/04

28-NOV-2006 08:25
F:\Structures\bl443\Final\B-1443_sd_Ebts_01.dgn
klayne

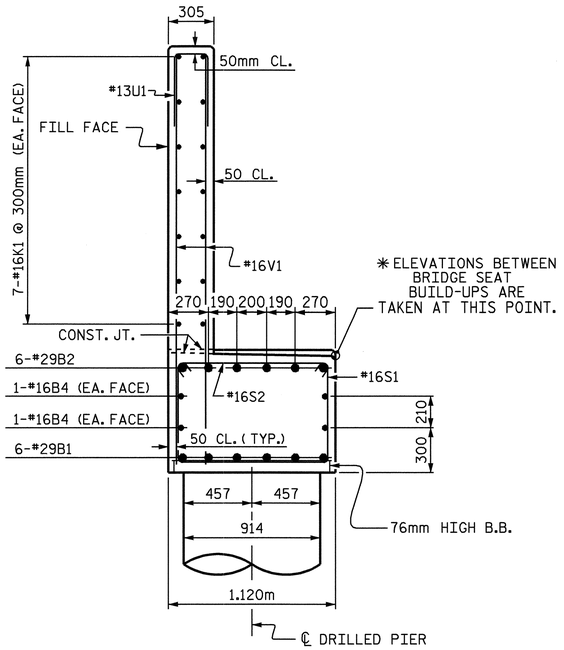


## SECTION A-A

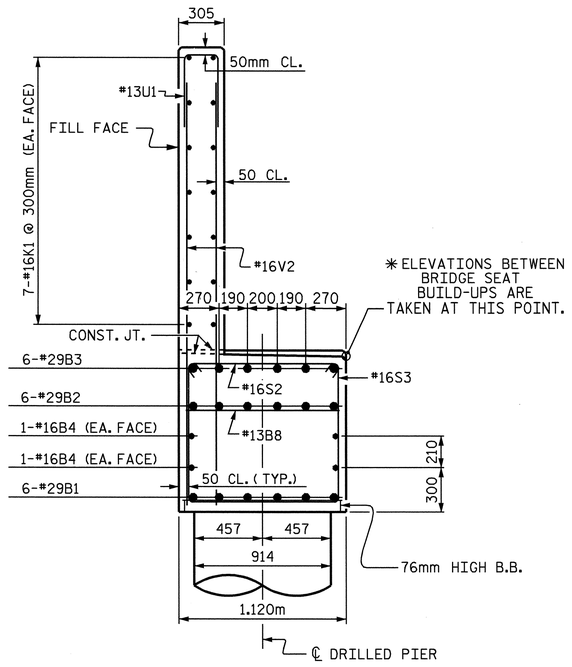


## SECTION B-B

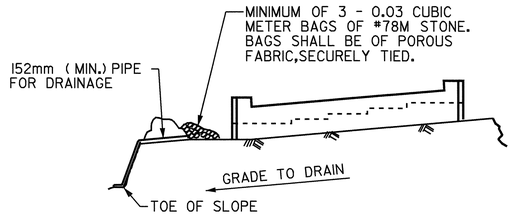


BAGGED STONE AND PIPE SHALL BE PLACED IMMEDIATELY AFTER COMPLETION OF END BENT EXCAVATION. PIPE MAY BE EITHER CONCRETE,CORRUGATED STEEL,CORRUGATED ALUMINUM ALLOY,OR CORRUGATED PLASTIC.PERFORATED PIPE WILL NOT BE ALLOWED.

BAGGED STONE SHALL REMAIN IN PLACE UNTIL THE ENGINEER DIRECTS THAT IT BE REMOVED.THE CONTRACTOR SHALL REMOVE AND DISPOSE OF SILT ACCUMULATIONS AT BAGGED STONE WHEN SO DIRECTED BY THE ENGINEER. BAGS SHALL BE REMOVED AND REPLACED WHENEVER THE ENGINEER DETERMINES THAT THEY HAVE DETERIORATED AND LOST THEIR EFFECTIVENESS.

NO SEPARATE PAYMENT WILL BE MADE FOR THIS WORK AND THE ENTIRE COST OF THIS WORK SHALL BE INCLUDED IN THE UNIT CONTRACT PRICE BID FOR THE SEVERAL PAY ITEMS.

## TEMPORARY DRAINAGE AT END BENT

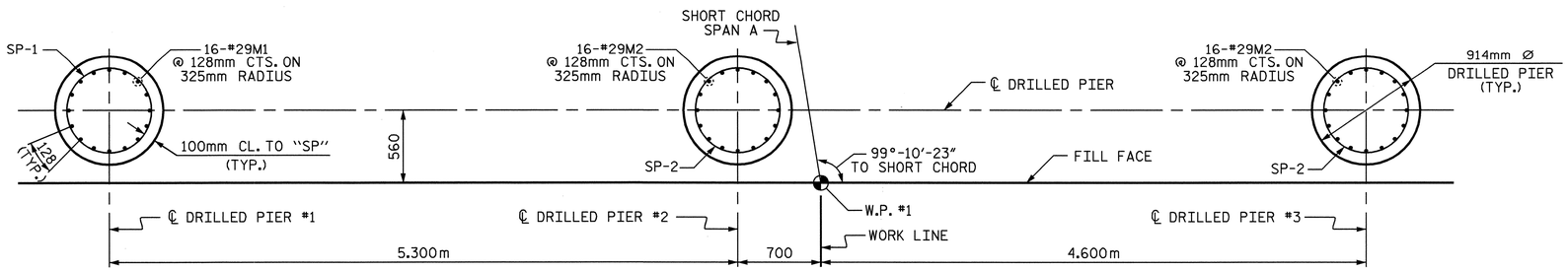


## PLAN OF DRILLED PIERS

## BAR TYPES

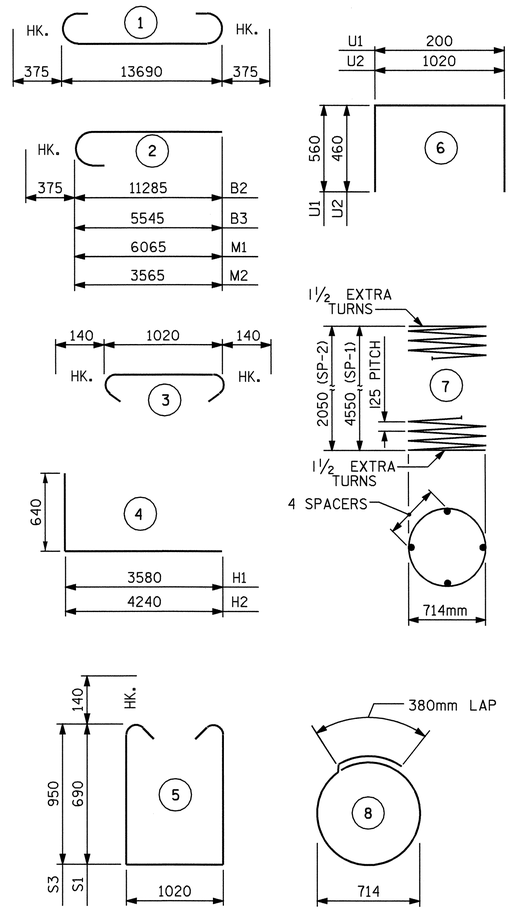


ALL BAR DIMENSIONS ARE OUT TO OUT.

## BILL OF MATERIAL

### END BENT NO. 1

| BAR | NO. | SIZE | TYPE | LENGTH | WEIGHT |
|---|---|---|---|---|---|
| B1 | 6 | #29 | 1 | 14440 | 438 |
| B2 | 6 | #29 | 2 | 11660 | 354 |
| B3 | 6 | #29 | 2 | 5920 | 180 |
| B4 | 4 | #16 | STR | 13740 | 85 |
| B5 | 6 | #13 | STR | 3280 | 20 |
| B6 | 6 | #13 | STR | 2300 | 14 |
| B7 | 2 | #16 | STR | 3340 | 10 |
| B8 | 3 | #13 | STR | 1020 | 3 |
| | | | | | |
| H1 | 40 | #19 | 4 | 4220 | 377 |
| H2 | 46 | #19 | 4 | 4880 | 502 |
| | | | | | |
| K1 | 14 | #16 | STR | 13740 | 299 |
| K2 | 8 | #16 | STR | 860 | 11 |
| | | | | | |
| M1 | 16 | #29 | 2 | 6540 | 529 |
| M2 | 32 | #29 | 2 | 4040 | 654 |
| | | | | | |
| S1 | 36 | #16 | 5 | 2680 | 150 |
| S2 | 58 | #16 | 3 | 1300 | 117 |
| S3 | 22 | #16 | 5 | 3200 | 109 |
| S4 | 15 | #13 | 8 | 2640 | 39 |
| | | | | | |
| U1 | 40 | #13 | 6 | 1320 | 52 |
| U2 | 12 | #13 | 6 | 1940 | 23 |
| | | | | | |
| V1 | 44 | #19 | STR | 2600 | 256 |
| V2 | 36 | #19 | STR | 2840 | 229 |
| V3 | 34 | #16 | STR | 2940 | 155 |
| V4 | 38 | #16 | STR | 3380 | 199 |

REINFORCING STEEL kg 4805

| | | | | | |
|---|---|---|---|---|---|
| SP-1 | 1 | ✱✱ | 7 | 86780 | 135 |
| SP-2 | 2 | ✱✱ | 7 | 42840 | 133 |

TOTAL SPIRAL COLUMN REINFORCING STEEL kg 268

CLASS A CONCRETE BREAKDOWN

| | | |
|---|---|---|
| POUR #2 | m³ | 17.4 |
| POUR #3 | m³ | 13.5 |
| TOTAL | m³ | 30.9 |

### DRILLED PIER QUANTITIES

| | | |
|---|---|---|
| DRILLED PIER CONCRETE | | |
| POUR #1 | m³ | 6.0 |
| 914mmØ DRILLED PIER IN SOIL | meters | 3.1 |
| 914mmØ DRILLED PIER NOT IN SOIL | meters | 6.0 |
| CSL TUBES | meters | 45.4 |

✱✱ THE SP-1 & SP-2 SPIRAL REINFORCING STEEL SHALL BE W31 OR D-31 COLD DRAWN WIRE OR #16 PLAIN OR DEFORMED BAR,

PROJECT NO. B-1443

MITCHELL/YANCEY COUNTY

STATION: 12+94.300-L-

SHEET 3 OF 3

STATE OF NORTH CAROLINA
DEPARTMENT OF TRANSPORTATION
RALEIGH

SUBSTRUCTURE
END BENT 1

NORTH CAROLINA PROFESSIONAL SEAL 20211 ENGINEER THOMAS G. PAYNE
11/28/06

| REVISIONS | | | | | | SHEET NO. |
|---|---|---|---|---|---|---|
| NO. | BY: | DATE: | NO. | BY: | DATE: | S-75 |
| 1 | | | 3 | | | TOTAL SHEETS |
| 2 | | | 4 | | | 91 |

DRAWN BY : S.H. SOCKWELL DATE : 2/10/04
CHECKED BY : H.A. LOCKLEAR DATE : 6/21/04

28-NOV-2006 08:25
F:\Structures\bl443\Final\B-1443_sd_Ebts_01.dgn
klayne

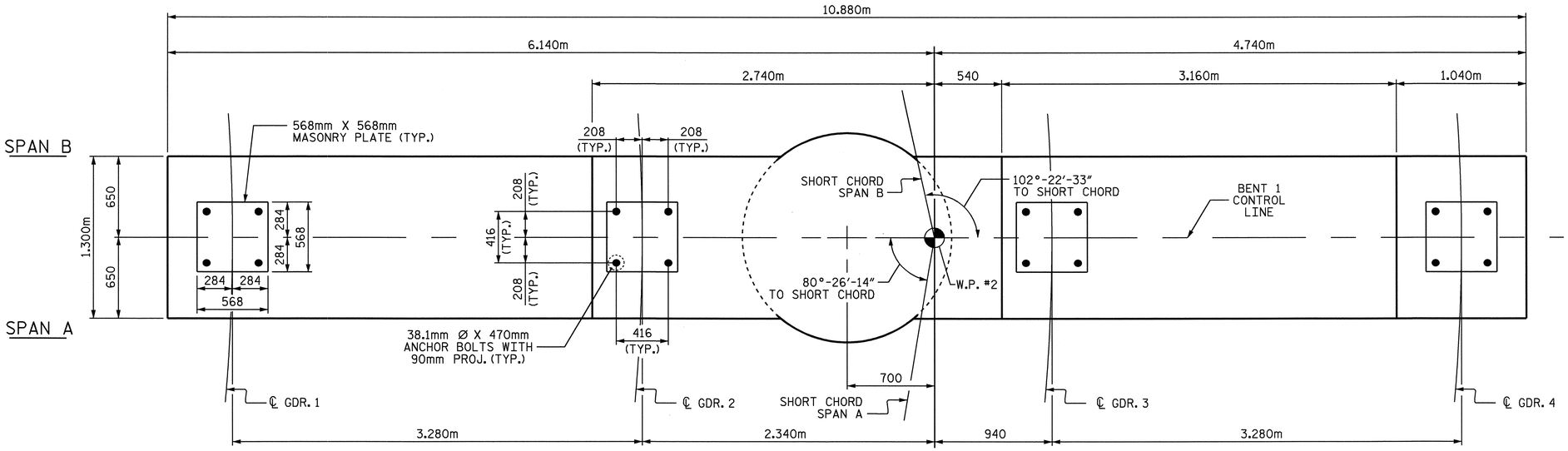


## PLAN

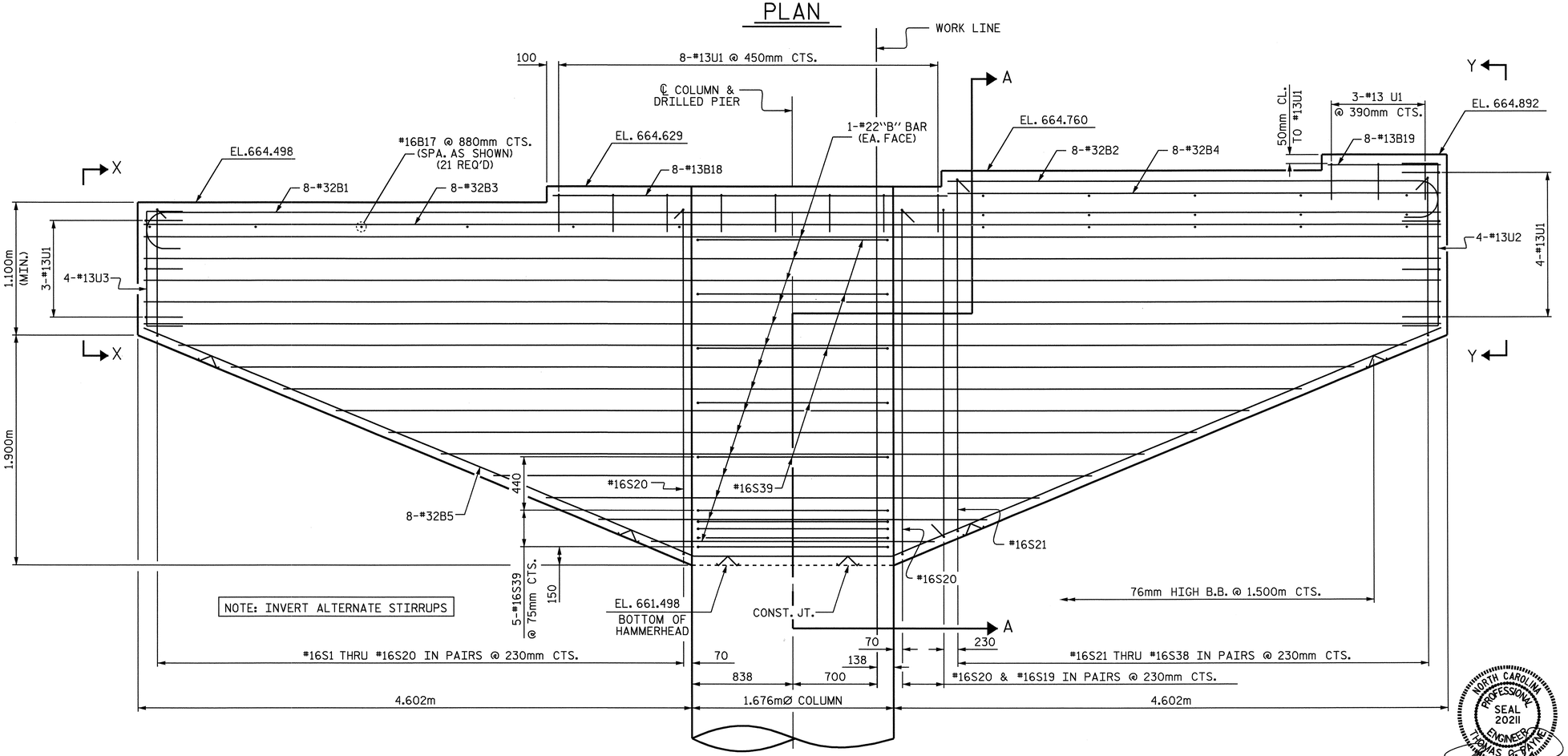


## ELEVATION

## NOTES

STIRRUPS IN CAP MAY BE SHIFTED AS NECESSARY TO CLEAR ANCHOR BOLTS.

HOOKS ON V1 BARS MAY BE TURNED AS NECESSARY FOR PLACING REINFORCING STEEL.

ALL STEEL IN THE DRILLED PIERS IS INCLUDED IN THE PAY ITEMS FOR "REINFORCING STEEL" AND "SPIRAL COLUMN REINFORCING STEEL".

THE CONTRACTOR'S ATTENTION IS CALLED TO THE FACT THAT THE LONGITUDINAL REINFORCEMENT FOR THE DRILLED PIERS IS DETAILED WITH ONE METER OF EXTRA LENGTH.

SPLICING OF THE LONGITUDINAL BARS IN THE DRILLED PIER WILL NOT BE PERMITTED.

DETAILED DRAWINGS FOR FALSEWORK AND FORMS FOR THIS HAMMERHEAD BENT SHALL BE SUBMITTED, SEE SHEET SNSM.

DRAWN BY : S.H. SOCKWELL DATE : 3/01/04
CHECKED BY : J.P. ADAMS DATE : 3/12/04

18-OCT-2006 11:47
F:\Structures\b1443\Final\B-1443_sd_Bts_01.dgn
klayne

NORTH CAROLINA PROFESSIONAL SEAL 20211 ENGINEER THOMAS C. PAYNE
10/18/06

PROJECT NO. B-1443
MITCHELL/YANCEY COUNTY
STATION: 12+94.300-L-

SHEET 1 OF 3

STATE OF NORTH CAROLINA
DEPARTMENT OF TRANSPORTATION
RALEIGH

SUBSTRUCTURE
BENT 1

| REVISIONS | | | | | | SHEET NO. |
|---|---|---|---|---|---|---|
| NO. | BY: | DATE: | NO. | BY: | DATE: | S-76 |
| 1 | | | 3 | | | TOTAL SHEETS |
| 2 | | | 4 | | | 91 |

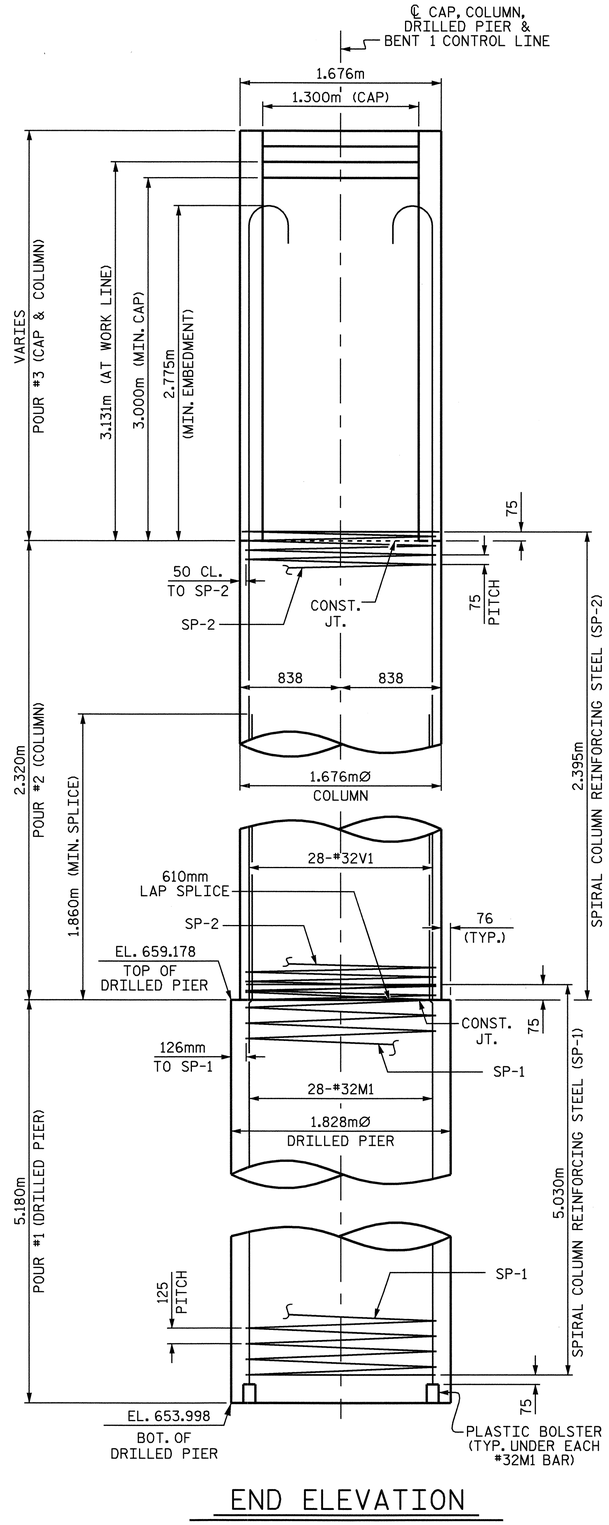


END ELEVATION

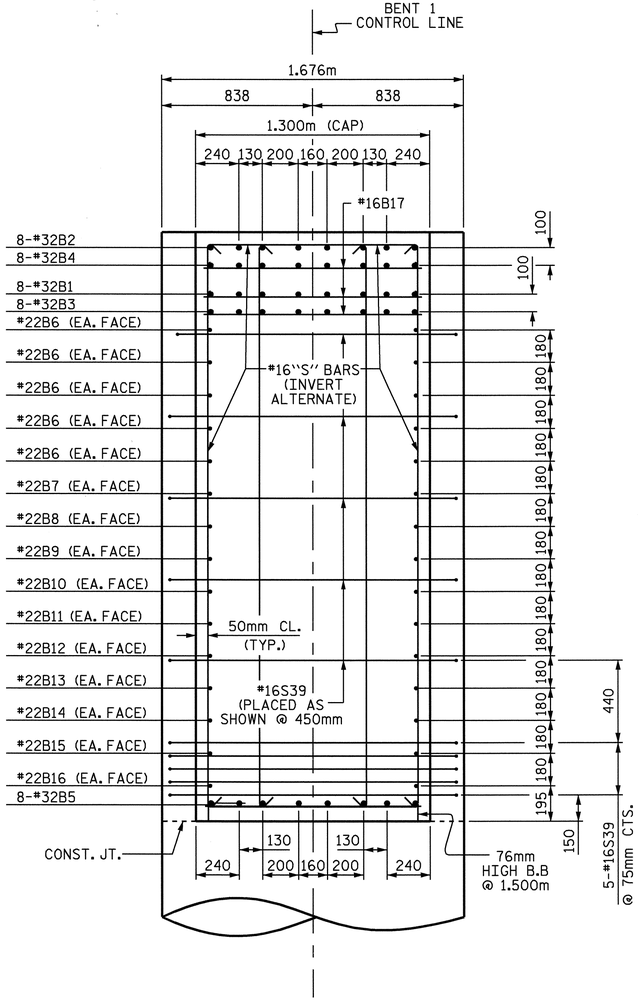
BENT 1 CONTROL LINE
1.676m
838
838
1.300m (CAP)
240 130 200 160 200 130 240
#16B17
8-#32B2
8-#32B4
8-#32B1
8-#32B3
#22B6 (EA. FACE)
#22B6 (EA. FACE)
#22B6 (EA. FACE)
#22B6 (EA. FACE)
#22B6 (EA. FACE)
#22B7 (EA. FACE)
#22B8 (EA. FACE)
#22B9 (EA. FACE)
#22B10 (EA. FACE)
#22B11 (EA. FACE)
#22B12 (EA. FACE)
#22B13 (EA. FACE)
#22B14 (EA. FACE)
#22B15 (EA. FACE)
#22B16 (EA. FACE)
8-#32B5
#16"S" BARS (INVERT ALTERNATE)
50mm CL. (TYP.)
#16S39 (PLACED AS SHOWN @ 450mm
100
100
180
180
180
180
180
180
180
180
180
180
180
180
180
180
180
180
180
180
180
180
180
180
180
180
180
180
180
180
180
180
180
180
180
180
180
180
180
180
180
180
180
180
180
180
180
180
180
180
180
180
180
180
180
180
180
180
180
180
180
180
180
180
180
180
180
180
180
180
180
180
180
180
180
180
180
180
180
180
180
180
180
180
180
180
180
180
180
180
180
180
180
180
180
180
180
180
180
180
180
180
180
180
180
180
180
180
180
180
180
180
180
180
180
180
180
180
180
180
180
180
180
180
180
180
180
180
180
180
180
180
180
180
180
180
180
180
180
180
180
180
180
180
180
180
180
180
180
180
180
180
180
180
180
180
180
180
180
180
180
180
180
180
180
180
180
180
180
180
180
180
180
180
180
180
180
180
180
180
180
180
180
180
180
180
180
180
180
180
180
180
180
180
180
180
180
180
180
180
180
180
180
180
180
180
180
180
180
180
180
180
180
180
180
180
180
180
180
180
180
180
180
180
180
180
180
180
180
180
180
180
180
180
180
180
180
180
180
180
180
180
180
180
180
180
180
180
180
180
180
180
180
180
180
180
180
180
180
180
180
180
180
180
180
180
180
180
180
180
180
180
180
180
180
180
180
180
180
180
180
180
180
180
180
180
180
180
180
180
180
180
180
180
180
180
180
180
180
180
180
180
180
180
180
180
180
180
180
180
180
180
180
180
180
180
180
180
180
180
180
180
180
180
180
180
180
180
180
180
180
180
180
180
180
180
180
180
180
180
180
180
180
180
180
180
180
180
180
180
180
180
180
180
180
180
180
180
180
180
180
180
180
180
180
180
180
180
180
180
180
180
180
180
180
180
180
180
180
180
180
180
180
180
180
180
180
180
180
180
180
180
180
180
180
180
180
180
180
180
180
180
180
180
180
180
180
180
180
180
180
180
180
180
180
180
180
180
180
180
180
180
180
180
180
180
180
180
180
180
180
180
180
180
180
180
180
180
180
180
180
180
180
180
180
180
180
180
180
180
180
180
180
180
180
180
180
180
180
180
180
180
180
180
180
180
180
180
180
180
180
180
180
180
180
180
180
180
180
180
180
180
180
180
180
180
180
180
180
180
180
180
180
180
180
180
180
180
180
180
180
180
180
180
180
180
180
180
180
180
180
180
180
180
180
180
180
180
180
180
180
180
180
180
180
180
180
180
180
180
180
180
180
180
180
180
180
180
180
180
180
180
180
180
180
180
180
180
180
180
180
180
180
180
180
180
180
180
180
180
180
180
180
180
180
180
180
180
180
180
180
180
180
180
180
180
180
180
180
180
180
180
180
180
180
180
180
180
180
180
180
180
180
180
180
180
180
180
180
180
180
180
180
180
180
180
180
180
180
180
180
180
180
180
180
180
180
180
180
180
180
180
180
180
180
180
180
180
180
180
180
180
180
180
180
180
180
180
180
180
180
180
180
180
180
180
180
180
180
180
180
180


VIEW X-X

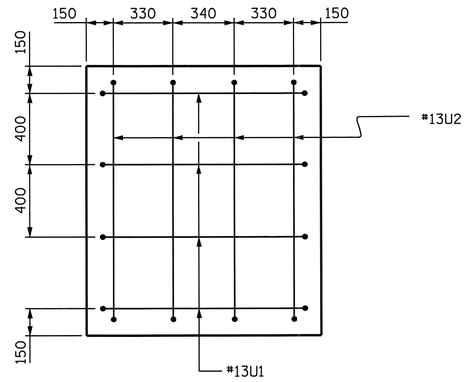


VIEW Y-Y

SECTION A-A

PROJECT NO. B-1443

MITCHELL/YANCEY COUNTY

STATION: 12+94.300-L-

SHEET 2 OF 3

STATE OF NORTH CAROLINA
DEPARTMENT OF TRANSPORTATION
RALEIGH

SUBSTRUCTURE

BENT 1

NORTH CAROLINA PROFESSIONAL SEAL 20211 ENGINEER THOMAS G. PAYNE
10/6/06

| REVISIONS | | | | | | SHEET NO. |
|---|---|---|---|---|---|---|
| NO. | BY: | DATE: | NO. | BY: | DATE: | S-77 |
| 1 | | | 3 | | | TOTAL SHEETS |
| 2 | | | 4 | | | 91 |

DRAWN BY : S.H. SOCKWELL DATE : 3/01/04
CHECKED BY : J.P. ADAMS DATE : 3/12/04

18-OCT-2006 11:47
F:\Structures\b1443\Final\B-1443_sd_Bts_01.dgn
klayne

## BAR TYPES

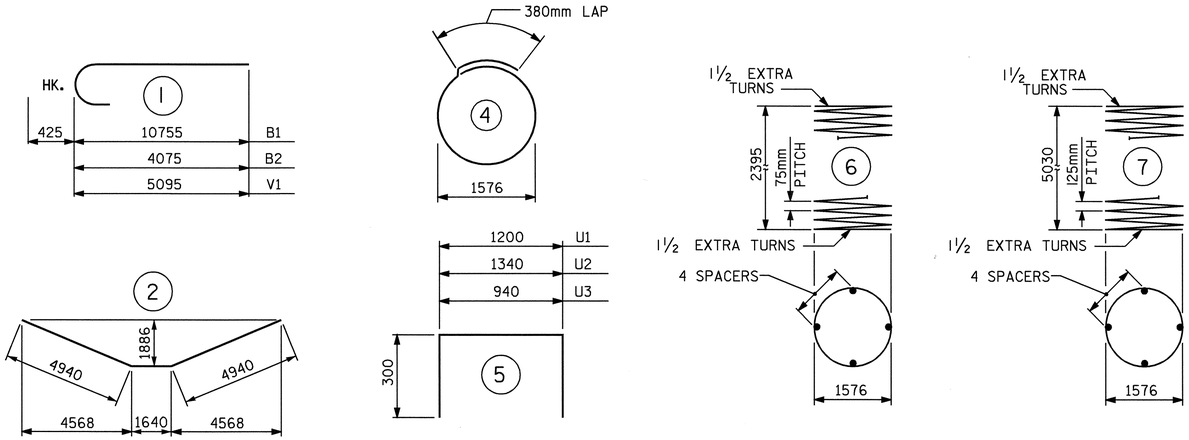


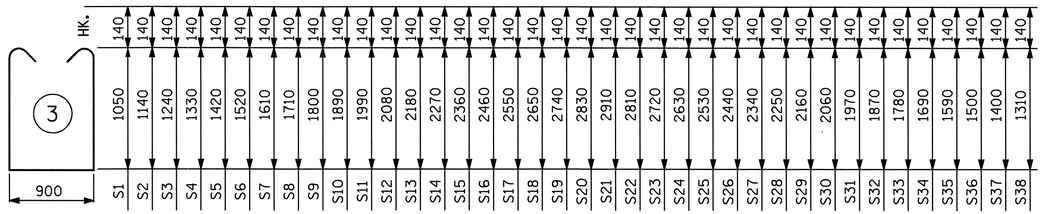


ALL BAR DIMENSIONS ARE OUT TO OUT.

## BILL OF MATERIAL

### BENT NO. 1

| BAR | NO. | SIZE | TYPE | LENGTH | WEIGHT |
|---|---|---|---|---|---|
| B1 | 8 | #32 | 1 | 11180 | 573 |
| B2 | 8 | #32 | 1 | 4500 | 231 |
| B3 | 8 | #32 | STR | 10780 | 552 |
| B4 | 8 | #32 | STR | 4100 | 210 |
| B5 | 8 | #32 | 2 | 11520 | 590 |
| B6 | 10 | #22 | STR | 10780 | 328 |
| B7 | 2 | #22 | STR | 10200 | 62 |
| B8 | 2 | #22 | STR | 9320 | 57 |
| B9 | 2 | #22 | STR | 8460 | 51 |
| B10 | 2 | #22 | STR | 7580 | 46 |
| B11 | 2 | #22 | STR | 6700 | 41 |
| B12 | 2 | #22 | STR | 5840 | 36 |
| B13 | 2 | #22 | STR | 4960 | 30 |
| B14 | 2 | #22 | STR | 4100 | 25 |
| B15 | 2 | #22 | STR | 3220 | 20 |
| B16 | 2 | #22 | STR | 2340 | 14 |
| B17 | 21 | #16 | STR | 1200 | 39 |
| B18 | 8 | #13 | STR | 3280 | 26 |
| B19 | 8 | #13 | STR | 940 | 7 |
| | | | | | |
| M1 | 28 | #32 | STR | 7900 | 1417 |
| | | | | | |
| S1 | 2 | #16 | 3 | 3280 | 10 |
| S2 | 2 | #16 | 3 | 3460 | 11 |
| S3 | 2 | #16 | 3 | 3660 | 11 |
| S4 | 2 | #16 | 3 | 3840 | 12 |
| S5 | 2 | #16 | 3 | 4020 | 12 |
| S6 | 2 | #16 | 3 | 4220 | 13 |
| S7 | 2 | #16 | 3 | 4400 | 14 |
| S8 | 2 | #16 | 3 | 4600 | 14 |
| S9 | 2 | #16 | 3 | 4780 | 15 |
| S10 | 2 | #16 | 3 | 4960 | 15 |
| S11 | 2 | #16 | 3 | 5160 | 16 |
| S12 | 2 | #16 | 3 | 5340 | 17 |
| S13 | 2 | #16 | 3 | 5540 | 17 |
| S14 | 2 | #16 | 3 | 5720 | 18 |
| S15 | 2 | #16 | 3 | 5900 | 18 |
| S16 | 2 | #16 | 3 | 6100 | 19 |
| S17 | 2 | #16 | 3 | 6280 | 19 |
| S18 | 2 | #16 | 3 | 6480 | 20 |
| S19 | 4 | #16 | 3 | 6660 | 41 |
| S20 | 4 | #16 | 3 | 6840 | 42 |
| S21 | 2 | #16 | 3 | 7000 | 22 |
| S22 | 2 | #16 | 3 | 6800 | 21 |
| S23 | 2 | #16 | 3 | 6620 | 21 |
| S24 | 2 | #16 | 3 | 6440 | 20 |
| S25 | 2 | #16 | 3 | 6240 | 19 |
| S26 | 2 | #16 | 3 | 6060 | 19 |
| S27 | 2 | #16 | 3 | 5860 | 18 |
| S28 | 2 | #16 | 3 | 5680 | 18 |
| S29 | 2 | #16 | 3 | 5500 | 17 |
| S30 | 2 | #16 | 3 | 5300 | 16 |
| S31 | 2 | #16 | 3 | 5120 | 16 |
| S32 | 2 | #16 | 3 | 4920 | 15 |
| S33 | 2 | #16 | 3 | 4740 | 15 |
| S34 | 2 | #16 | 3 | 4560 | 14 |
| S35 | 2 | #16 | 3 | 4360 | 14 |
| S36 | 2 | #16 | 3 | 4180 | 13 |
| S37 | 2 | #16 | 3 | 3980 | 12 |
| S38 | 2 | #16 | 3 | 3800 | 12 |
| S39 | 10 | #16 | 4 | 5340 | 83 |
| | | | | | |
| U1 | 18 | #13 | 5 | 1800 | 32 |
| U2 | 4 | #13 | 5 | 1940 | 8 |
| U3 | 4 | #13 | 5 | 1540 | 6 |
| | | | | | |
| V1 | 28 | #32 | 1 | 5520 | 990 |

REINFORCING STEEL = 6130 kg

| | | | | | |
|---|---|---|---|---|---|
| SP-1 | 1 | ** | 7 | 212,060 | 329 |
| SP-2 | 1 | * | 6 | 171,920 | 171 |

TOTAL SPIRAL COLUMN REINFORCING STEEL kg 500

CLASS A CONCRETE BREAKDOWN

| | | |
|---|---|---|
| POUR #2 (COLUMN) | m³ | 5.1 |
| POUR #3 (CAP) | m³ | 34.1 |
| TOTAL CLASS A CONCRETE | m³ | 39.2 |

## DRILLED PIER QUANTITIES

DRILLED PIER CONCRETE BREAKDOWN

POUR #1 (DRILLED PIER) m³ 13.6

1.828mØ DRILLED PIER NOT IN SOIL
meters 4.0

1.828mØ DRILLED PIER IN SOIL
meters 1.2

PERMANENT STEEL CASING FOR 1.828mØ DRILLED PIER
meters 1.2

SID INSPECTION
ea. 1

CROSSHOLE SONIC LOGGING
ea. 1

CSL TUBES
meters 35.6

* THE SP-2 SPIRAL REINFORCING STEEL SHALL BE W20 OR D-20 COLD DRAWN WIRE OR #13 PLAIN OR DEFORMED BAR.

** THE SP-1 SPIRAL REINFORCING STEEL SHALL BE W31 OR D-31 COLD DRAWN WIRE OR #16 PLAIN OR DEFORMED BAR.

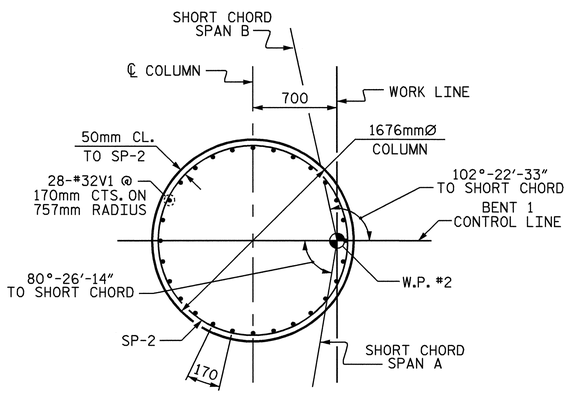


PLAN OF COLUMN

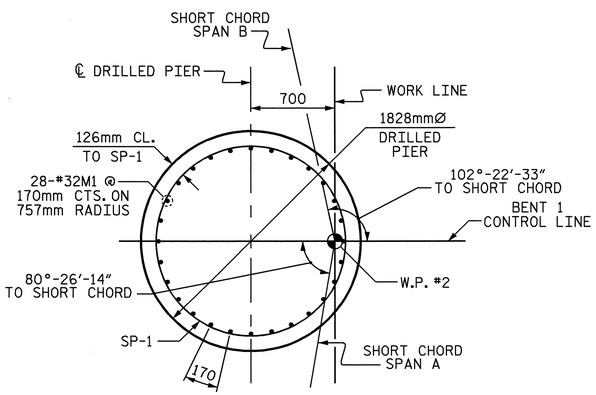


PLAN OF DRILLED PIER

NORTH CAROLINA PROFESSIONAL SEAL 20211 ENGINEER THOMAS D. PAYNE
10/18/06

PROJECT NO. B-1443
MITCHELL/YANCEY COUNTY
STATION: 12+94.300-L-

SHEET 3 OF 3

STATE OF NORTH CAROLINA
DEPARTMENT OF TRANSPORTATION
RALEIGH

SUBSTRUCTURE

BENT 1

| REVISIONS | | | | | | SHEET NO. |
|---|---|---|---|---|---|---|
| NO. | BY: | DATE: | NO. | BY: | DATE: | S-78 |
| 1 | | | 3 | | | TOTAL SHEETS |
| 2 | | | 4 | | | 91 |

DRAWN BY : S.H. SOCKWELL DATE : 3/01/04
CHECKED BY : J.P. ADAMS DATE : 3/12/04

18-OCT-2006 11:47
F:\Structures\b1443\Final\B-1443_sd_Bts_01.dgn
klayne

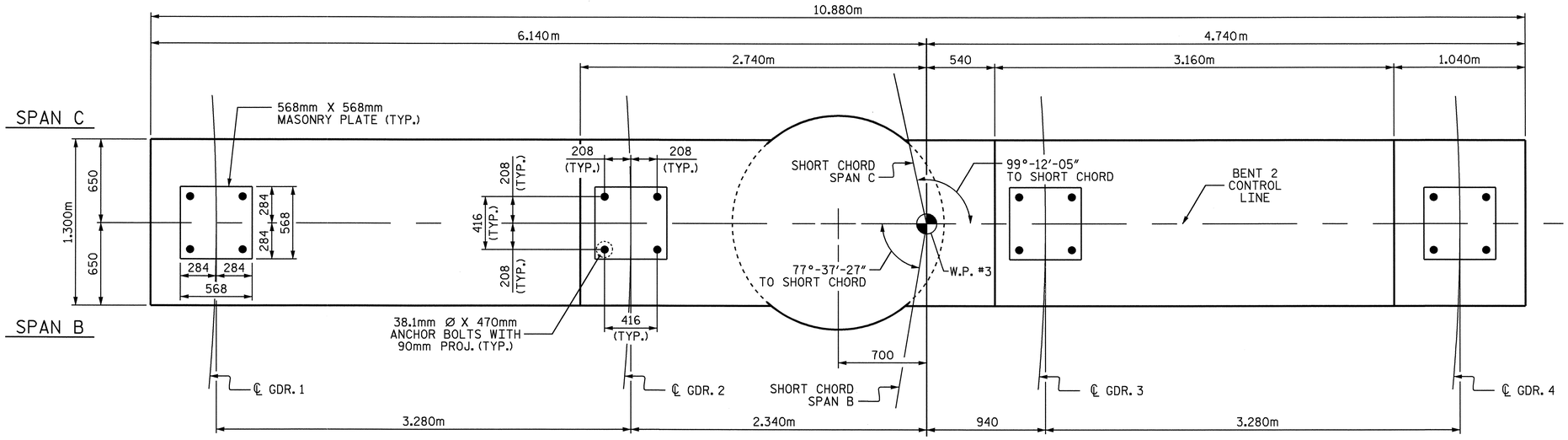


## NOTES

STIRRUPS IN CAP MAY BE SHIFTED AS NECESSARY TO CLEAR ANCHOR BOLTS.

HOOKS ON V1 BARS MAY BE TURNED AS NECESSARY FOR PLACING REINFORCING STEEL.

ALL STEEL IN THE DRILLED PIERS IS INCLUDED IN THE PAY ITEMS FOR "REINFORCING STEEL" AND "SPIRAL COLUMN REINFORCING STEEL".

THE CONTRACTOR'S ATTENTION IS CALLED TO THE FACT THAT THE LONGITUDINAL REINFORCEMENT FOR THE DRILLED PIERS IS DETAILED WITH ONE METER OF EXTRA LENGTH.

SPLICING OF THE LONGITUDINAL BARS IN THE DRILLED PIER WILL NOT BE PERMITTED.

DETAILED DRAWINGS FOR FALSEWORK AND FORMS FOR THIS HAMMERHEAD BENT SHALL BE SUBMITTED, SEE SHEET SNSM.

## PLAN

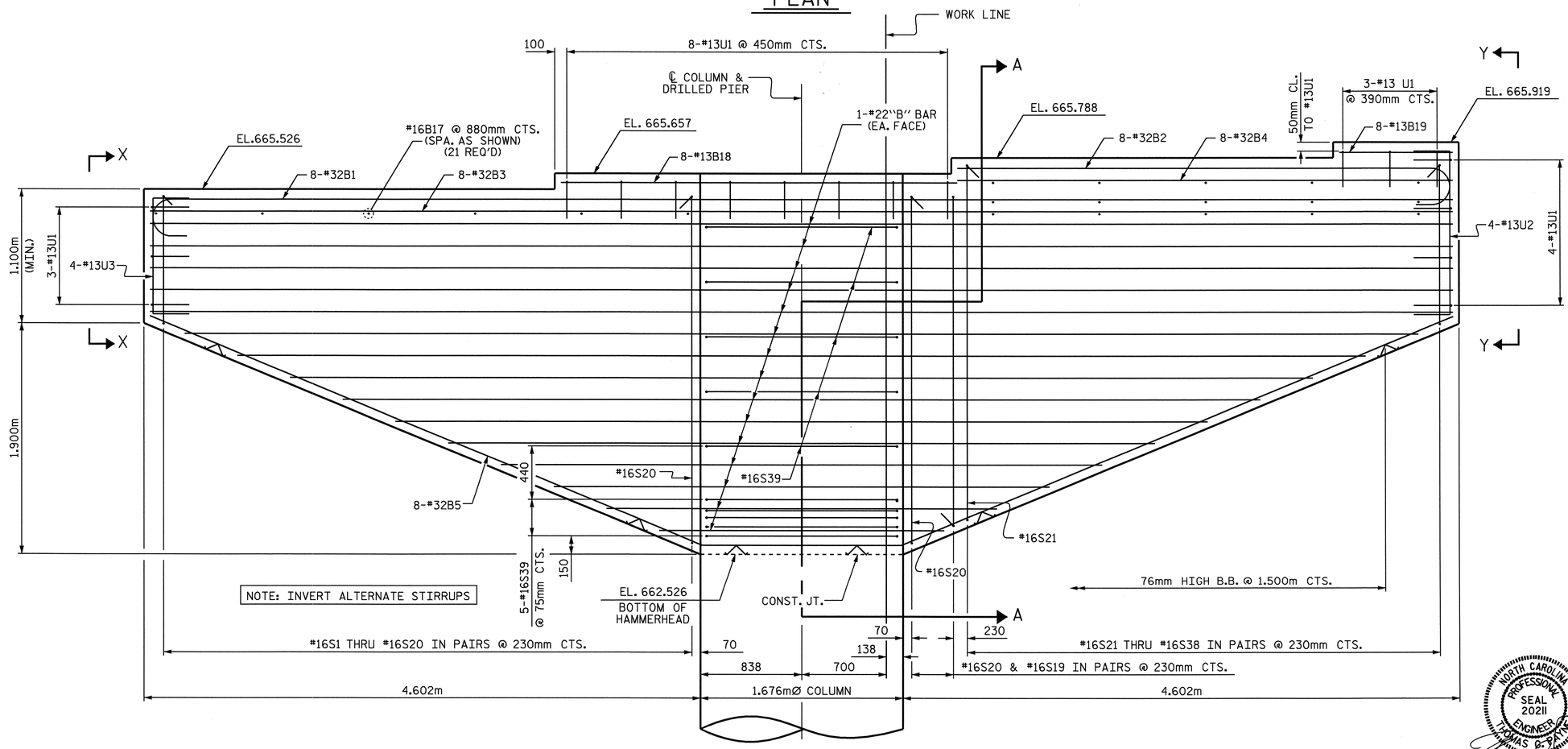


## ELEVATION

PROJECT NO. B-1443

MITCHELL/YANCEY COUNTY

STATION: 12+94.300-L-

SHEET 1 OF 3

STATE OF NORTH CAROLINA
DEPARTMENT OF TRANSPORTATION
RALEIGH

SUBSTRUCTURE
BENT 2

| REVISIONS | | | | | | SHEET NO. |
|---|---|---|---|---|---|---|
| NO. | BY: | DATE: | NO. | BY: | DATE: | S-79 |
| 1 | | | 3 | | | TOTAL SHEETS |
| 2 | | | 4 | | | 91 |

NORTH CAROLINA PROFESSIONAL SEAL 20211 ENGINEER THOMAS P. PAYNE
10/18/06

DRAWN BY : S.H. SOCKWELL DATE : 3/01/04
CHECKED BY : J.P. ADAMS DATE : 3/12/04

18-OCT-2006 11:47
F:\Structures\bi443\Final\B-1443_sd_Bts_01.dgn
klayne

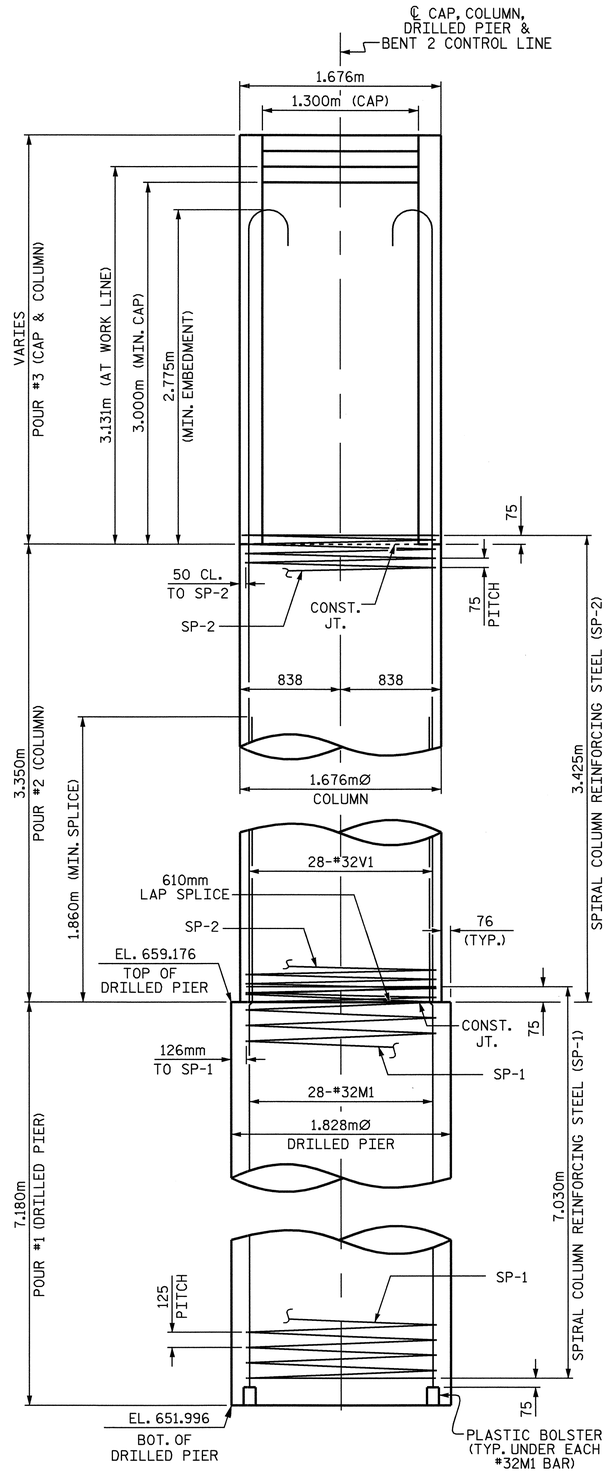


END ELEVATION

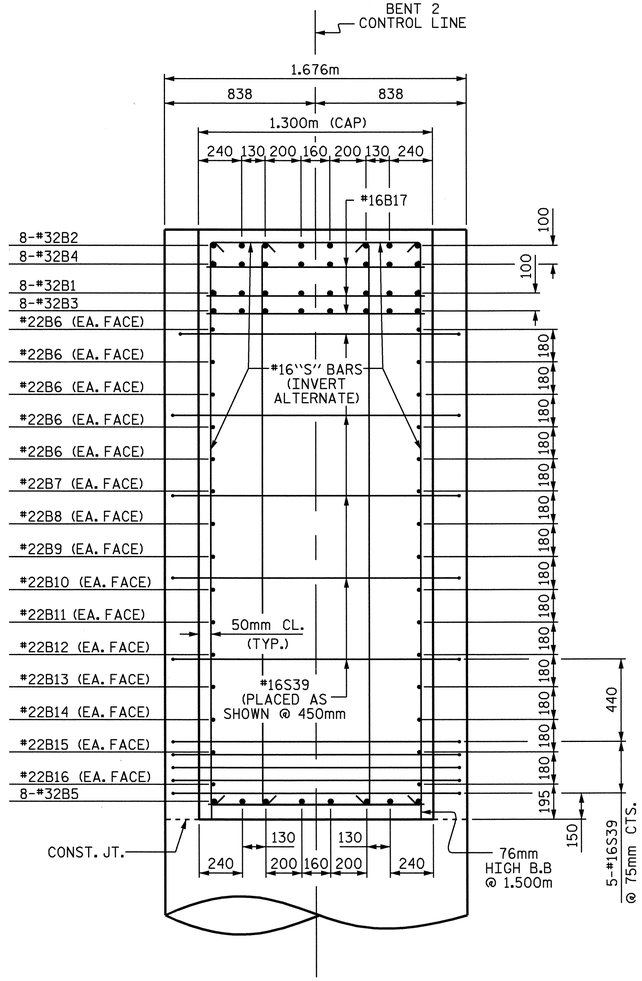


SECTION A-A

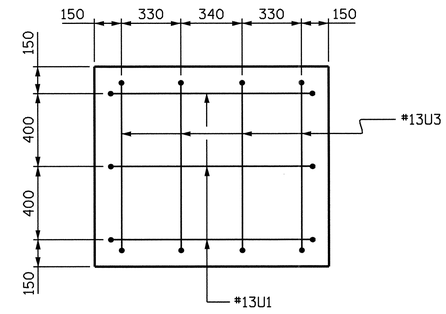


VIEW X-X

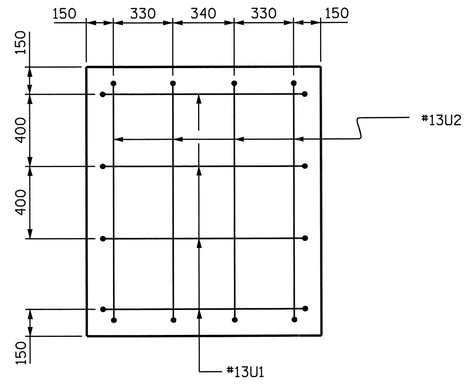


VIEW Y-Y

PROJECT NO. B-1443

MITCHELL/YANCEY COUNTY

STATION: 12+94.300-L-

SHEET 2 OF 3

STATE OF NORTH CAROLINA
DEPARTMENT OF TRANSPORTATION
RALEIGH

SUBSTRUCTURE

BENT 2

NORTH CAROLINA PROFESSIONAL SEAL 20211 ENGINEER THOMAS G. PAYNE

Thomas G. Payne 10/18/06

| REVISIONS | | | | | | SHEET NO. |
|---|---|---|---|---|---|---|
| NO. | BY: | DATE: | NO. | BY: | DATE: | S-80 |
| 1 | | | 3 | | | TOTAL SHEETS |
| 2 | | | 4 | | | 91 |

DRAWN BY : S.H. SOCKWELL DATE : 3/01/04

CHECKED BY : J.P. ADAMS DATE : 3/12/04

18-OCT-2006 11:47
F:\Structures\bl443\Final\B-1443_sd_Bts_01.dgn
klayne

## BAR TYPES

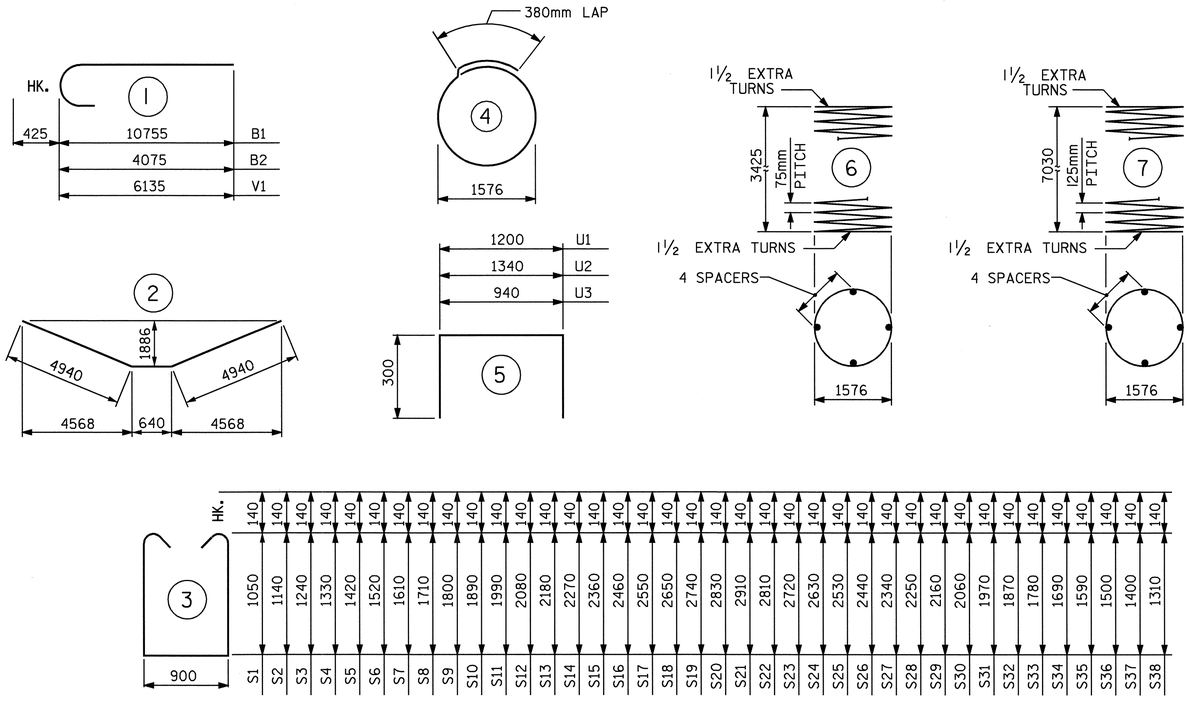


ALL BAR DIMENSIONS ARE OUT TO OUT.

## BILL OF MATERIAL

### BENT NO. 2

| BAR | NO. | SIZE | TYPE | LENGTH | WEIGHT |
|---|---|---|---|---|---|
| B1 | 8 | #32 | 1 | 11180 | 573 |
| B2 | 8 | #32 | 1 | 4500 | 231 |
| B3 | 8 | #32 | STR | 10780 | 552 |
| B4 | 8 | #32 | STR | 4100 | 210 |
| B5 | 8 | #32 | 2 | 11520 | 590 |
| B6 | 10 | #22 | STR | 10780 | 328 |
| B7 | 2 | #22 | STR | 10200 | 62 |
| B8 | 2 | #22 | STR | 9320 | 57 |
| B9 | 2 | #22 | STR | 8460 | 51 |
| B10 | 2 | #22 | STR | 7580 | 46 |
| B11 | 2 | #22 | STR | 6700 | 41 |
| B12 | 2 | #22 | STR | 5840 | 36 |
| B13 | 2 | #22 | STR | 4960 | 30 |
| B14 | 2 | #22 | STR | 4100 | 25 |
| B15 | 2 | #22 | STR | 3220 | 20 |
| B16 | 2 | #22 | STR | 2340 | 14 |
| B17 | 21 | #16 | STR | 1200 | 39 |
| B18 | 8 | #13 | STR | 3280 | 26 |
| B19 | 8 | #13 | STR | 940 | 7 |
| | | | | | |
| M1 | 28 | #32 | STR | 9900 | 1775 |
| | | | | | |
| S1 | 2 | #16 | 3 | 3280 | 10 |
| S2 | 2 | #16 | 3 | 3460 | 11 |
| S3 | 2 | #16 | 3 | 3660 | 11 |
| S4 | 2 | #16 | 3 | 3840 | 12 |
| S5 | 2 | #16 | 3 | 4020 | 12 |
| S6 | 2 | #16 | 3 | 4220 | 13 |
| S7 | 2 | #16 | 3 | 4400 | 14 |
| S8 | 2 | #16 | 3 | 4600 | 14 |
| S9 | 2 | #16 | 3 | 4780 | 15 |
| S10 | 2 | #16 | 3 | 4960 | 15 |
| S11 | 2 | #16 | 3 | 5160 | 16 |
| S12 | 2 | #16 | 3 | 5340 | 17 |
| S13 | 2 | #16 | 3 | 5540 | 17 |
| S14 | 2 | #16 | 3 | 5720 | 18 |
| S15 | 2 | #16 | 3 | 5900 | 18 |
| S16 | 2 | #16 | 3 | 6100 | 19 |
| S17 | 2 | #16 | 3 | 6280 | 19 |
| S18 | 2 | #16 | 3 | 6480 | 20 |
| S19 | 4 | #16 | 3 | 6660 | 41 |
| | | | | | |

| BAR | NO. | SIZE | TYPE | LENGTH | WEIGHT |
|---|---|---|---|---|---|
| S20 | 4 | #16 | 3 | 6840 | 42 |
| S21 | 2 | #16 | 3 | 7000 | 22 |
| S22 | 2 | #16 | 3 | 6800 | 21 |
| S23 | 2 | #16 | 3 | 6620 | 21 |
| S24 | 2 | #16 | 3 | 6440 | 20 |
| S25 | 2 | #16 | 3 | 6240 | 19 |
| S26 | 2 | #16 | 3 | 6060 | 19 |
| S27 | 2 | #16 | 3 | 5860 | 18 |
| S28 | 2 | #16 | 3 | 5680 | 18 |
| S29 | 2 | #16 | 3 | 5500 | 17 |
| S30 | 2 | #16 | 3 | 5300 | 16 |
| S31 | 2 | #16 | 3 | 5120 | 16 |
| S32 | 2 | #16 | 3 | 4920 | 15 |
| S33 | 2 | #16 | 3 | 4740 | 15 |
| S34 | 2 | #16 | 3 | 4560 | 14 |
| S35 | 2 | #16 | 3 | 4360 | 14 |
| S36 | 2 | #16 | 3 | 4180 | 13 |
| S37 | 2 | #16 | 3 | 3980 | 12 |
| S38 | 2 | #16 | 3 | 3800 | 12 |
| S39 | 10 | #16 | 4 | 5340 | 83 |
| | | | | | |
| U1 | 18 | #13 | 5 | 1800 | 32 |
| U2 | 4 | #13 | 5 | 1940 | 8 |
| U3 | 4 | #13 | 5 | 1540 | 6 |
| | | | | | |
| V1 | 28 | #32 | 1 | 6560 | 1176 |

REINFORCING STEEL = 6674 kg

| | | | | | |
|---|---|---|---|---|---|
| SP-1 | 1 | ** | 7 | 290,500 | 451 |
| SP-2 | 1 | * | 6 | 239,460 | 238 |

TOTAL SPIRAL COLUMN REINFORCING STEEL kg 689

CLASS A CONCRETE BREAKDOWN

| | | |
|---|---|---|
| POUR #2 (COLUMN) | m³ | 7.4 |
| POUR #3 (CAP) | m³ | 34.1 |
| TOTAL CLASS A CONCRETE | m³ | 41.5 |

## DRILLED PIER QUANTITIES

DRILLED PIER CONCRETE BREAKDOWN

POUR #1 (DRILLED PIER) m³ 18.8

1.828mØ DRILLED PIER NOT IN SOIL
meters 4.0

1.828mØ DRILLED PIER IN SOIL
meters 3.2

PERMANENT STEEL CASING FOR 1.828mØ DRILLED PIER
meters 3.2

SID INSPECTION
ea. 1

CROSSHOLE SONIC LOGGING
ea. 1

CSL TUBES
meters 47.6

* THE SP-2 SPIRAL REINFORCING STEEL SHALL BE W20 OR D-20 COLD DRAWN WIRE OR #13 PLAIN OR DEFORMED BAR.
** THE SP-1 SPIRAL REINFORCING STEEL SHALL BE W31 OR D-31 COLD DRAWN WIRE OR #16 PLAIN OR DEFORMED BAR.

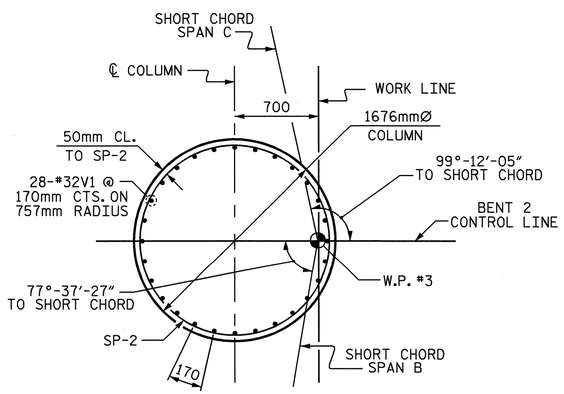


PLAN OF COLUMN

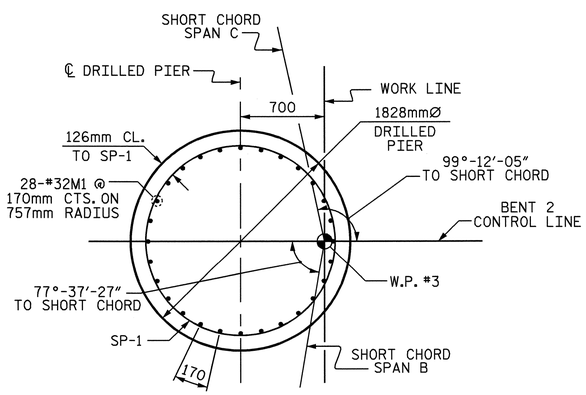


PLAN OF DRILLED PIER

NORTH CAROLINA PROFESSIONAL SEAL 20211 ENGINEER THOMAS B PAYNE
10/18/06

PROJECT NO. B-1443
MITCHELL/YANCEY COUNTY
STATION: 12+94.300-L-

SHEET 3 OF 3

STATE OF NORTH CAROLINA
DEPARTMENT OF TRANSPORTATION
RALEIGH

SUBSTRUCTURE

BENT 2

| REVISIONS | | | | | | SHEET NO. |
|---|---|---|---|---|---|---|
| NO. | BY: | DATE: | NO. | BY: | DATE: | S-81 |
| 1 | | | 3 | | | TOTAL SHEETS |
| 2 | | | 4 | | | 91 |

DRAWN BY : S.H. SOCKWELL DATE : 3/01/04
CHECKED BY : J.P. ADAMS DATE : 3/12/04

18-OCT-2006 11:47
F:\Structures\bl443\Final\B-1443_sd_Bts_01.dgn
klayne

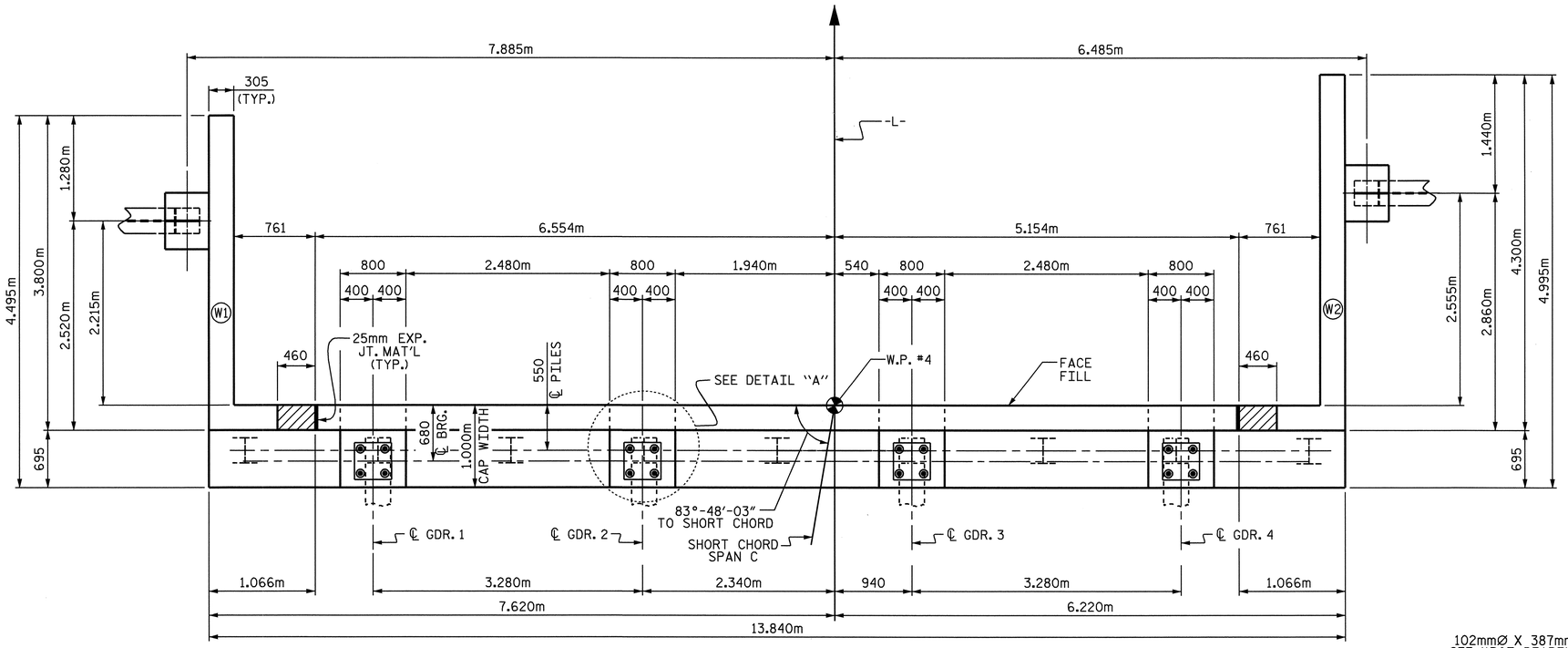


## PLAN

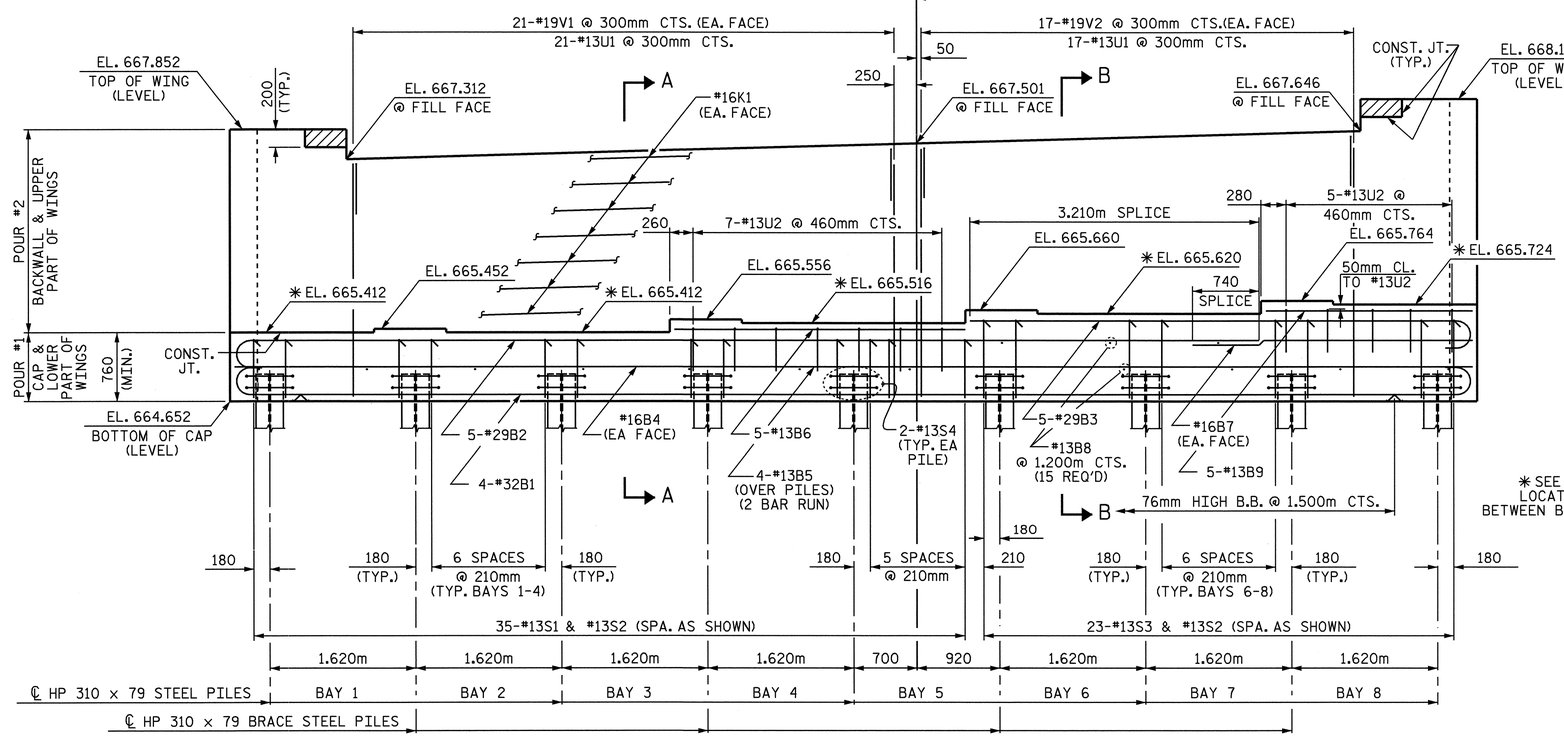


## ELEVATION

(WING PILES NOT SHOWN FOR CLARITY)

✳SEE SHEET 3 OF 3 FOR LOCATION OF ELEVATION BETWEEN BRIDGE SEAT BUILD-UPS.

## NOTES

STIRRUPS IN CAP MAY BE SHIFTED AS NECESSARY TO CLEAR ANCHOR BOLTS.

BACKWALL SHALL BE PLACED BEFORE APPLYING THE EPOXY PROTECTIVE COATING.

THE TOP SURFACE AREAS OF THE END BENT CAPS SHALL BE CURED IN ACCORDANCE WITH THE STANDARD SPECIFICATIONS EXCEPT THE MEMBRANE CURING COMPOUND METHOD SHALL NOT BE USED.

THE TOP SURFACE OF THE CAP EXCEPT THE BRIDGE SEAT BUILDUPS SHALL BE SLOPED TRANSVERSELY FROM THE FILL FACE TO THE BACK FACE AT THE RATE OF 2 %.

THE CONCRETE IN THE SHADED AREA OF THE WING SHALL BE POURED AFTER THE JOINT IN THE DECK AND THE APPROACH SLAB HAS BEEN SAWED AND THE BARRIER RAIL IS CAST IF SLIP FORMING IS USED.

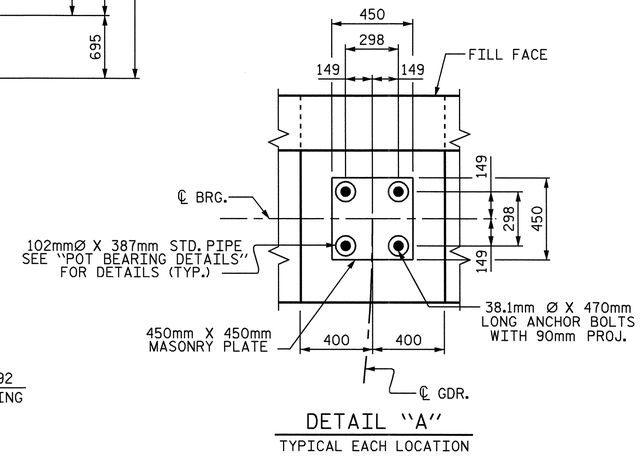


DETAIL "A"

TYPICAL EACH LOCATION

PROJECT NO. B-1443

MITCHELL/YANCEY COUNTY

STATION: 12+94.300-L-

SHEET 1 OF 3

STATE OF NORTH CAROLINA
DEPARTMENT OF TRANSPORTATION
RALEIGH

SUBSTRUCTURE

END BENT 2

| REVISIONS | | | | | | SHEET NO. |
|---|---|---|---|---|---|---|
| NO. | BY: | DATE: | NO. | BY: | DATE: | S-82 |
| 1 | | | 3 | | | TOTAL SHEETS |
| 2 | | | 4 | | | 91 |

NORTH CAROLINA PROFESSIONAL SEAL 20211 ENGINEER THOMAS G. PAYNE
11/28/06

DRAWN BY : S.H. SOCKWELL DATE : 2/10/04
CHECKED BY : H.A. LOCKLEAR DATE : 6/21/04

28-NOV-2006 08:51
F:\Structures\bl443\Final\B-1443_sd_Ebts_01.dgn
klayne

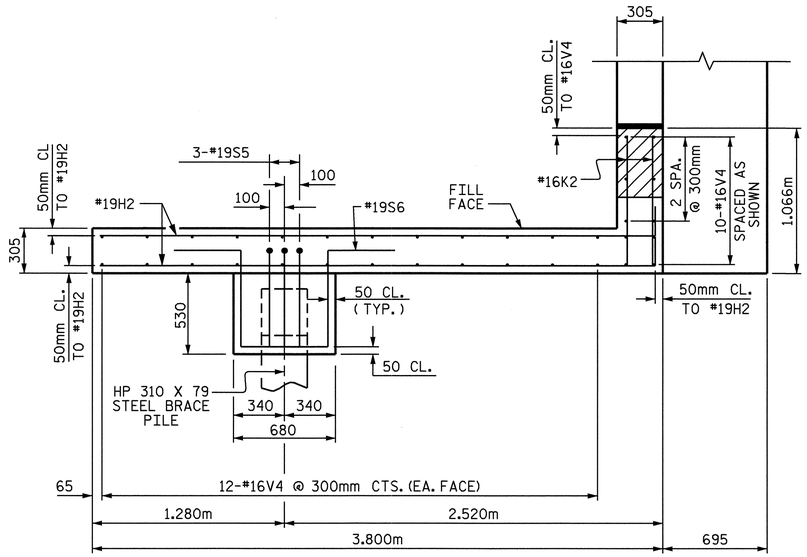


PLAN OF LEFT WING - (W1)

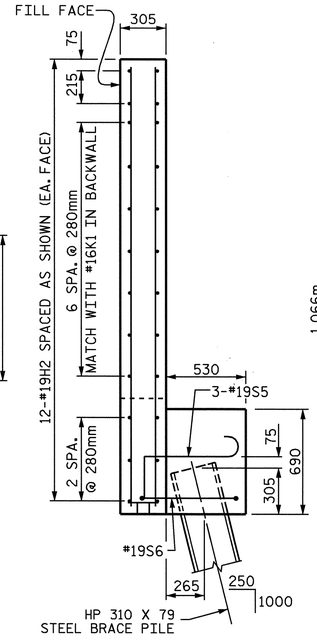


SECTION X-X

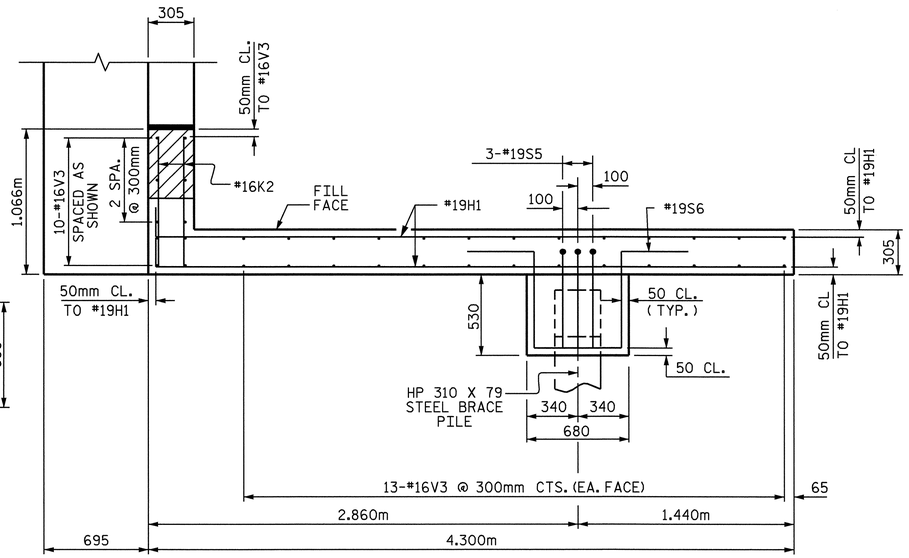


PLAN OF RIGHT WING - (W2)

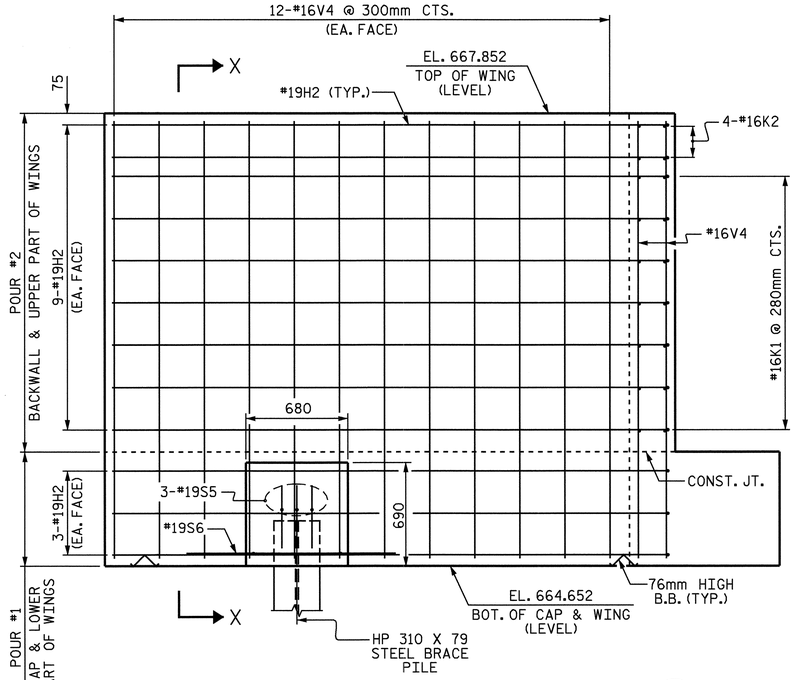


ELEVATION OF LEFT WING - (W1)

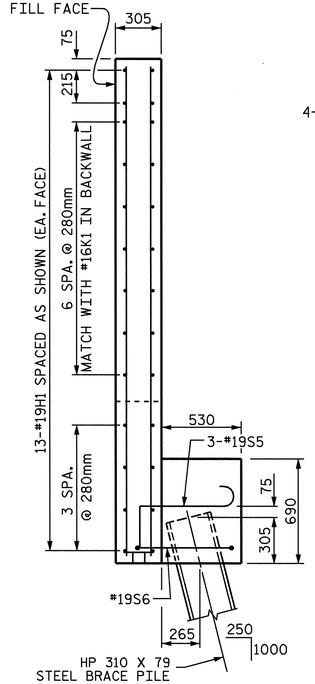


SECTION Y-Y

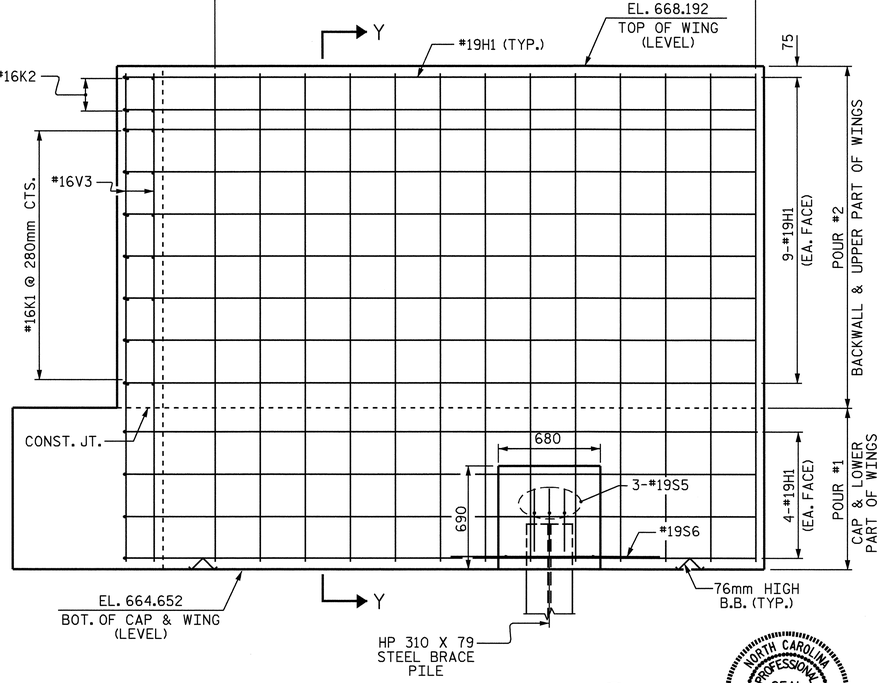


ELEVATION OF RIGHT WING - (W2)

NORTH CAROLINA PROFESSIONAL SEAL 20211 ENGINEER THOMAS R. PAYNE
11/28/06

PROJECT NO. B-1443
MITCHELL/YANCEY COUNTY
STATION: 12+94.300-L-

SHEET 2 OF 3

STATE OF NORTH CAROLINA
DEPARTMENT OF TRANSPORTATION
RALEIGH

SUBSTRUCTURE

END BENT 2

| REVISIONS | | | | | | SHEET NO. |
|---|---|---|---|---|---|---|
| NO. | BY: | DATE: | NO. | BY: | DATE: | S-83 |
| 1 | | | 3 | | | TOTAL SHEETS |
| 2 | | | 4 | | | 91 |

DRAWN BY : S.H. SOCKWELL DATE : 2/10/04
CHECKED BY : H.A. LOCKLEAR DATE : 6/21/04

28-NOV-2006 08:32
F:\Structures\bl443\Final\B-1443_sd_Ebts_01.dgn

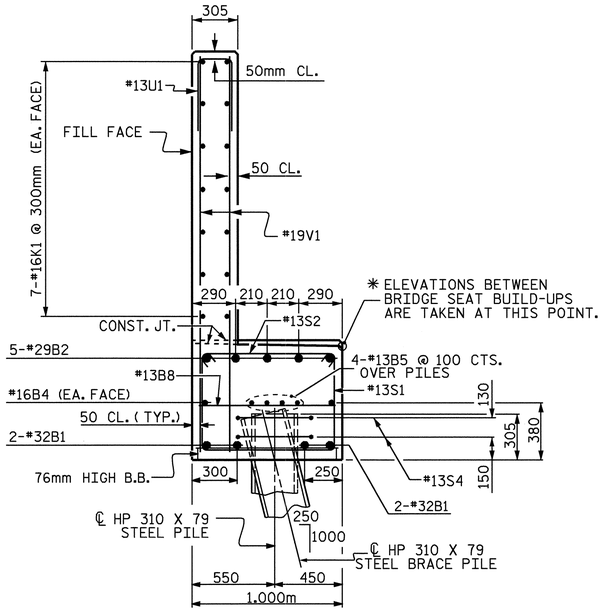


## SECTION A-A

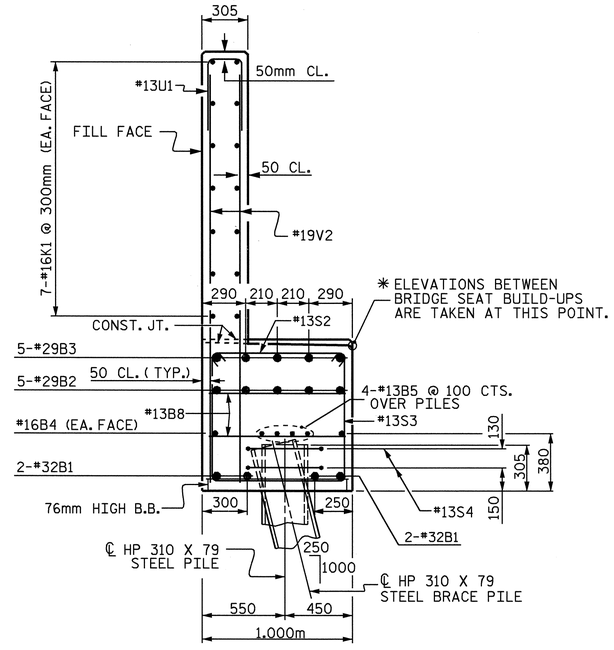


## SECTION B-B

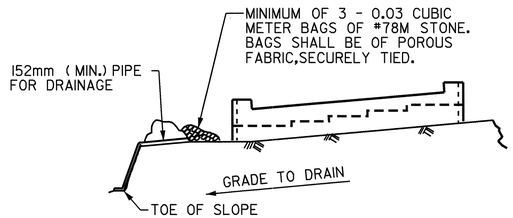


BAGGED STONE AND PIPE SHALL BE PLACED IMMEDIATELY AFTER COMPLETION OF END BENT EXCAVATION. PIPE MAY BE EITHER CONCRETE,CORRUGATED STEEL,CORRUGATED ALUMINUM ALLOY,OR CORRUGATED PLASTIC.PERFORATED PIPE WILL NOT BE ALLOWED.

BAGGED STONE SHALL REMAIN IN PLACE UNTIL THE ENGINEER DIRECTS THAT IT BE REMOVED.THE CONTRACTOR SHALL REMOVE AND DISPOSE OF SILT ACCUMULATIONS AT BAGGED STONE WHEN SO DIRECTED BY THE ENGINEER. BAGS SHALL BE REMOVED AND REPLACED WHENEVER THE ENGINEER DETERMINES THAT THEY HAVE DETERIORATED AND LOST THEIR EFFECTIVENESS.

NO SEPARATE PAYMENT WILL BE MADE FOR THIS WORK AND THE ENTIRE COST OF THIS WORK SHALL BE INCLUDED IN THE UNIT CONTRACT PRICE BID FOR THE SEVERAL PAY ITEMS.

## TEMPORARY DRAINAGE AT END BENT

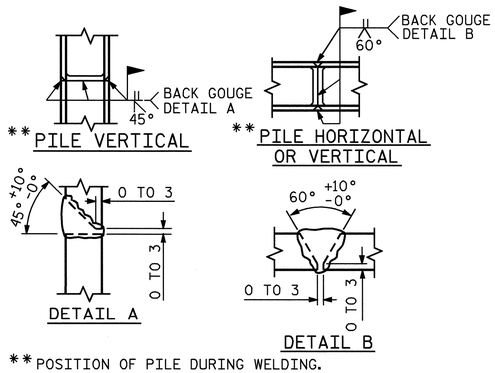


** POSITION OF PILE DURING WELDING.

## PILE SPLICE DETAILS

## BAR TYPES

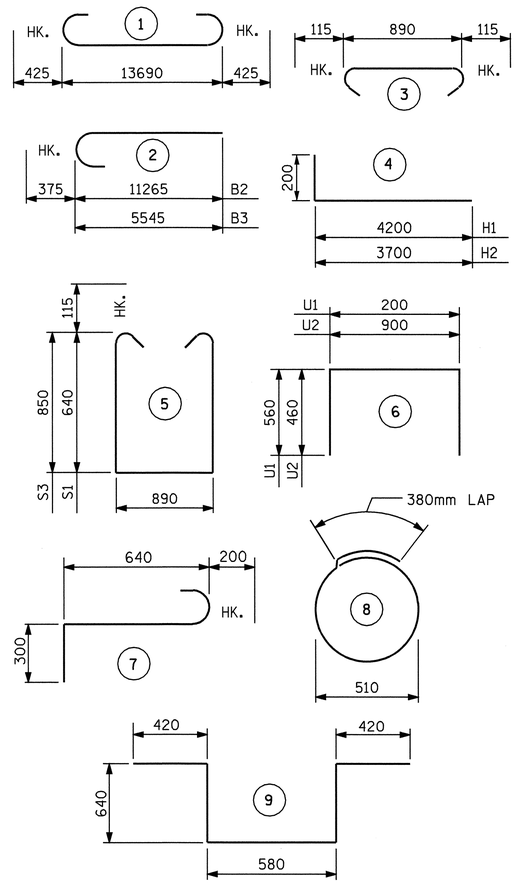


ALL BAR DIMENSIONS ARE OUT TO OUT.

## BILL OF MATERIAL
### END BENT NO. 2

| BAR | NO. | SIZE | TYPE | LENGTH | WEIGHT |
|---|---|---|---|---|---|
| B1 | 4 | #32 | 1 | 14540 | 372 |
| B2 | 5 | #29 | 2 | 11640 | 294 |
| B3 | 5 | #29 | 2 | 5920 | 150 |
| B4 | 2 | #16 | STR | 13740 | 43 |
| B5 | 8 | #13 | STR | 7240 | 58 |
| B6 | 5 | #13 | STR | 3220 | 16 |
| B7 | 2 | #16 | STR | 3300 | 10 |
| B8 | 15 | #13 | STR | 900 | 13 |
| B9 | 5 | #13 | STR | 2300 | 11 |
| | | | | | |
| H1 | 26 | #19 | 4 | 4400 | 256 |
| H2 | 24 | #19 | 4 | 3900 | 209 |
| | | | | | |
| K1 | 14 | #16 | STR | 13740 | 299 |
| K2 | 8 | #16 | STR | 960 | 12 |
| | | | | | |
| S1 | 35 | #13 | 5 | 2400 | 83 |
| S2 | 58 | #13 | 3 | 1120 | 65 |
| S3 | 23 | #13 | 5 | 2820 | 64 |
| S4 | 18 | #13 | 8 | 1980 | 35 |
| S5 | 6 | #19 | 7 | 1140 | 15 |
| S6 | 2 | #19 | 9 | 2700 | 12 |
| | | | | | |
| U1 | 38 | #13 | 6 | 1320 | 50 |
| U2 | 12 | #13 | 6 | 1820 | 22 |
| | | | | | |
| V1 | 42 | #19 | STR | 2560 | 240 |
| V2 | 34 | #19 | STR | 2740 | 208 |
| V3 | 36 | #16 | STR | 3440 | 192 |
| V4 | 34 | #16 | STR | 3100 | 164 |

REINFORCING STEEL kg 2893

CLASS A CONCRETE BREAKDOWN

| | | |
|---|---|---|
| POUR #1 | m³ | 15.0 |
| POUR #2 | m³ | 14.1 |
| TOTAL | m³ | 29.1 |

HP 310 X 79 STEEL PILES

| | | |
|---|---|---|
| No. 11 | meters | 71.5 |

STEEL PILE POINTS 11 EACH

PROJECT NO. B-1443
MITCHELL/YANCEY COUNTY
STATION: 12+94.300-L-

SHEET 3 OF 3

STATE OF NORTH CAROLINA
DEPARTMENT OF TRANSPORTATION
RALEIGH

SUBSTRUCTURE
END BENT 2

| REVISIONS | | | | | | SHEET NO. |
|---|---|---|---|---|---|---|
| NO. | BY: | DATE: | NO. | BY: | DATE: | S-84 |
| 1 | | | 3 | | | TOTAL SHEETS |
| 2 | | | 4 | | | 91 |

DRAWN BY : S.H. SOCKWELL DATE : 2/10/04
CHECKED BY : H.A. LOCKLEAR DATE : 6/21/04

28-NOV-2006 08:32
F:\Structures\bl443\Final\B-1443_sd_Ebts_01.dgn
klayne

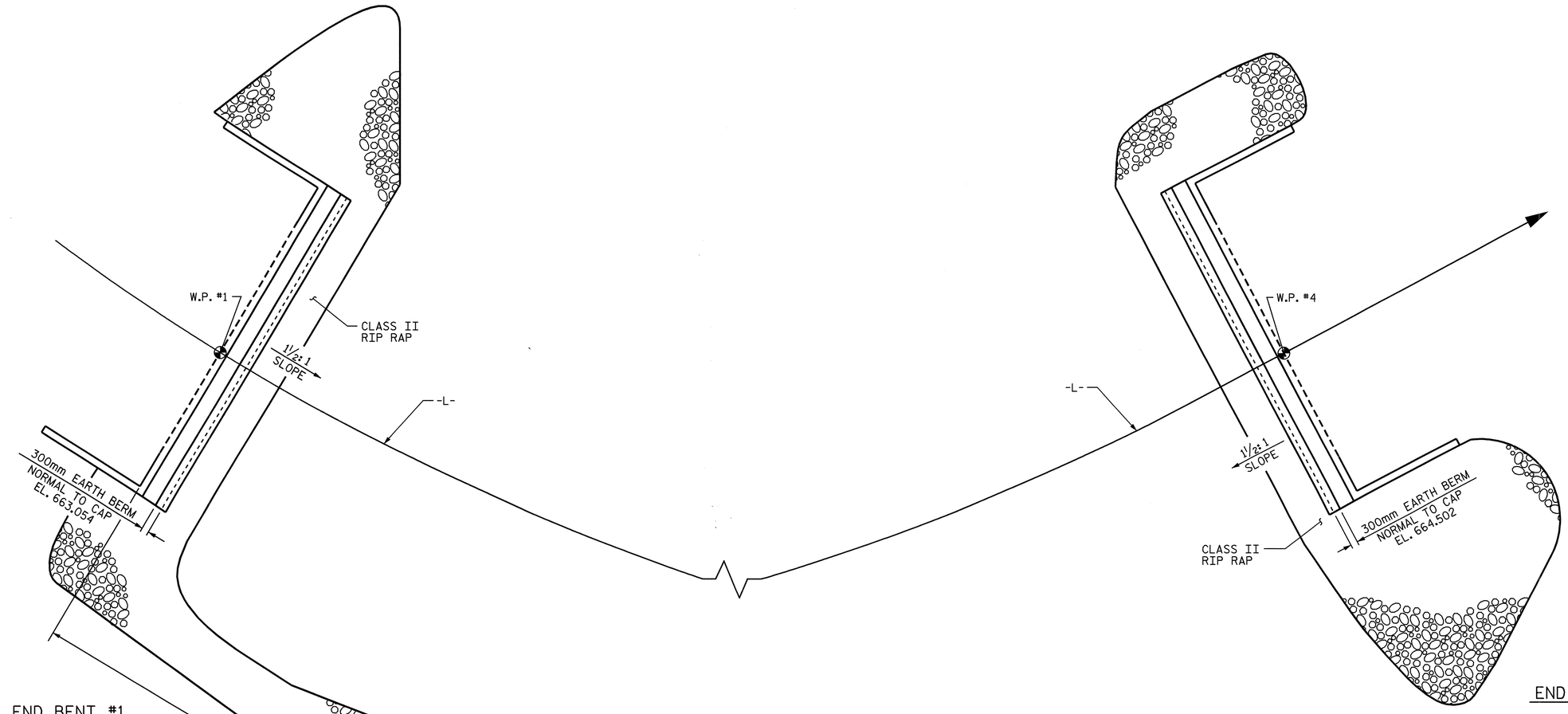


END BENT #1

END BENT #2

## PLAN OF RIP RAP

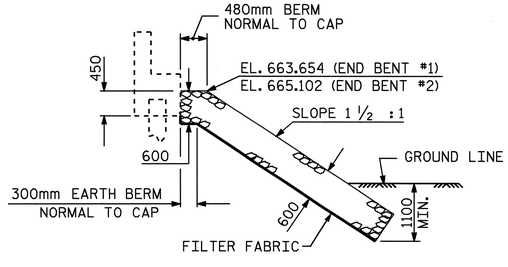


℄ SECTION

BERM RIP RAPPED

| ESTIMATED QUANTITIES | | |
|---|---|---|
| BRIDGE @ STA. 12+94.300 -L- | RIP RAP CLASS II | FILTER FABRIC FOR DRAINAGE |
| | METRIC TON | SQUARE METERS |
| END BENT #1 | 146 | 149 |
| END BENT #2 | 148 | 151 |

PROJECT NO. B-1443

MITCHELL/YANCEY COUNTY

STATION: 12+94.300 -L-

STATE OF NORTH CAROLINA
DEPARTMENT OF TRANSPORTATION
RALEIGH

# RIP RAP DETAILS

NORTH CAROLINA PROFESSIONAL SEAL 20211 ENGINEER THOMAS G. PAYNE

11/28/06

| REVISIONS | | | | | | SHEET NO. |
|---|---|---|---|---|---|---|
| NO. | BY: | DATE: | NO. | BY: | DATE: | S-85 |
| 1 | | | 3 | | | TOTAL SHEETS |
| 2 | | | 4 | | | 91 |

DRAWN BY : J.P. ADAMS DATE : 2/24/03
CHECKED BY : S.H. SOCKWELL DATE : 10/8/03

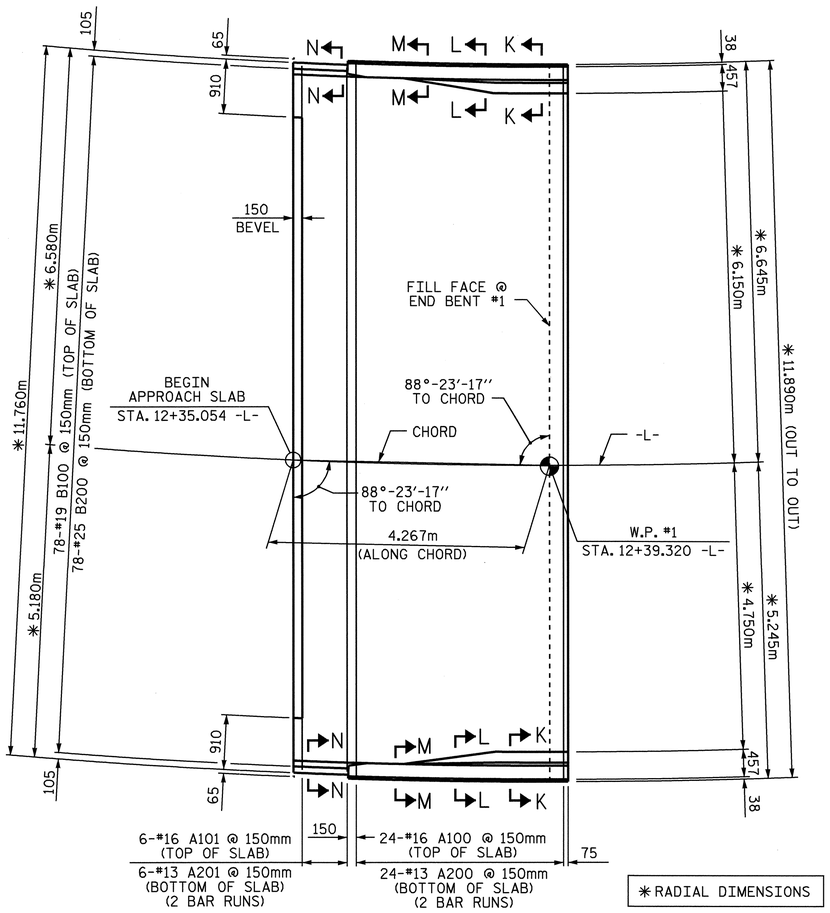


## PLAN OF APPROACH SLAB @ END BENT #1

TOP & BOTTOM "A" BARS SPACED RADIALLY ALONG -L-

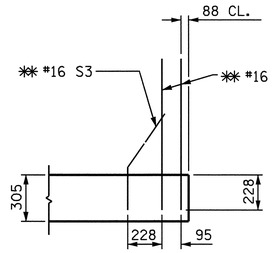


SECTION K-K

** ADHESIVELY ANCHORED

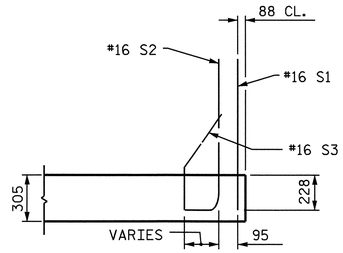


SECTION L-L

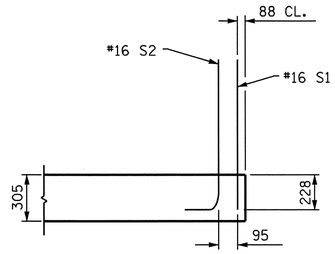


SECTION M-M

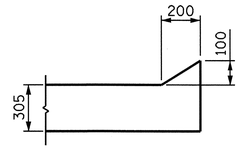


SECTION N-N

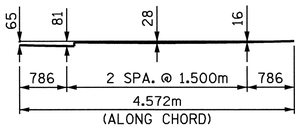


LEFT SIDE

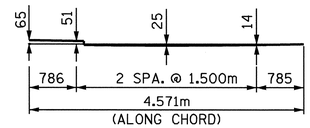


RIGHT SIDE

## ARC OFFSETS @ END BENT #1

PROJECT NO. B-1443

MITCHELL/YANCEY COUNTY

STATION: 12+94.300 -L-

SHEET 1 OF 4

STATE OF NORTH CAROLINA
DEPARTMENT OF TRANSPORTATION
RALEIGH

# BRIDGE APPROACH SLAB FOR FLEXIBLE PAVEMENT WITH BARRIER RAIL @ END BENT #1

| REVISIONS | | | | | | SHEET NO. |
|---|---|---|---|---|---|---|
| NO. | BY: | DATE: | NO. | BY: | DATE: | S-86 |
| 1 | | | 3 | | | TOTAL SHEETS |
| 2 | | | 4 | | | 91 |

NORTH CAROLINA PROFESSIONAL SEAL 20211 ENGINEER THOMAS G. PAYNE
11/28/06

DRAWN BY : J.P. ADAMS DATE : 7/11/05
CHECKED BY : S.H. SOCKWELL DATE : 7/11/05

28-NOV-2006 08:35
F:\Structures\bl443\Final\Bl443_sd_asl_01.dgn
klayne

# NOTES

THE COST OF THE BARRIER RAIL ON THE APPROACH SLAB SHALL BE INCLUDED IN THE LUMP SUM CONTRACT PRICE BID FOR BRIDGE APPROACH SLABS.

APPROACH SLAB SHALL NOT BE CONSTRUCTED PRIOR TO COMPLETION OF THE BRIDGE DECK.

SUBDRAIN FINE AGGREGATE IS TO BE CONTINUOUS ALONG FILL FACE OF BACKWALL AND END BENT FROM OUTSIDE EDGE TO OUTSIDE EDGE OF APPROACH SLAB.

TEMPORARY DRAINAGE AND TEMPORARY BERM AND SLOPE DRAINS WILL BE PAID FOR UNDER THE LUMP SUM PRICE FOR BRIDGE APPROACH SLAB.

AREA BETWEEN THE WINGWALL AND APPROACH SLAB SHALL BE GRADED TO DRAIN THE WATER AWAY FROM THE FILL FACE OF THE BRIDGE AND SHALL BE PAVED. SEE ROADWAY PLANS.

THE 150mm COMP. A.B.C. SHALL EXTEND 3m BEYOND THE END OF THE APPROACH SLAB AND 300mm OUTSIDE OF EACH EDGE OF THE SLAB.

THE CONTRACTOR MAY USE 100mm TYPE B-25.0B ASPHALT CONCRETE COURSE IN LIEU OF 150mm COMP. A.B.C. IF THIS OPTION IS USED, THE BASE COURSE SHALL EXTEND 300mm BEYOND THE END OF THE APPROACH SLAB AND THE WIDTH SHALL BE THE SAME AS THAT OF THE APPROACH SLAB.

THE CONTRACTOR MAY USE 125mm CLASS "A" CONCRETE BASE IN LIEU OF 150mm COMP. A.B.C. IF THIS OPTION IS USED, THE CONCRETE BASE SHALL EXTEND 300mm BEYOND THE END OF THE APPROACH SLAB AND THE WIDTH SHALL BE THE SAME AS THAT OF THE APPROACH SLAB. THE CONCRETE SHALL BE FINISHED TO A SMOOTH SURFACE AND A LAYER OF 13.6 kg. ROOFING FELT SHALL BE PLACED BETWEEN THE CONCRETE BASE AND THE APPROACH SLAB TO PREVENT BOND. THE APPROACH SLAB SHALL NOT BE CAST UNTIL THE CONCRETE BASE HAS REACHED AN AGE OF THREE CURING DAYS.

THE JOINT SHALL BE SAWED PRIOR TO THE CASTING OF THE BARRIER RAIL.

PAYMENT FOR APPROACH SLAB GROOVING IS INCLUDED IN THE "GROOVING BRIDGE PAY ITEM".

FOR EVAZOTE JOINT SEALS, SEE SPECIAL PROVISIONS.

THE NOMINAL UNCOMPRESSED SEAL WIDTH OF THE EVAZOTE JOINT SEAL SHALL BE 87mm.

THE COST OF THE 152mm Ø PVC PERFORATED PIPE AND THE SUBDRAIN FINE AGGREGATE SHALL BE INCLUDED IN THE COST OF THE APPROACH SLAB.

FOR ELASTOMERIC CONCRETE, SEE SPECIAL PROVISIONS.

# BILL OF MATERIAL
# FOR APPROACH SLAB @ END BENT #1

## BAR TYPES

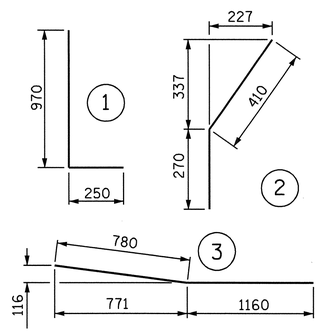


ALL BAR DIMENSIONS ARE OUT TO OUT

| BAR | NO. | SIZE | TYPE | LENGTH | WEIGHT |
|---|---|---|---|---|---|
| ✳A100 | 24 | #16 | STR | 11780 | 439 |
| ✳A101 | 6 | #16 | STR | 11660 | 109 |
| A200 | 48 | #13 | STR | 6180 | 295 |
| A201 | 12 | #13 | STR | 6100 | 73 |
| ✳B100 | 78 | #19 | STR | 4460 | 778 |
| B200 | 78 | #25 | STR | 4320 | 1339 |
| ✳B1 | 14 | #16 | STR | 3560 | 77 |
| ✳B2 | 2 | #16 | 3 | 1940 | 6 |
| ✳S1 | 58 | #16 | STR | 980 | 88 |
| ✳S2 | 42 | #16 | 1 | 1220 | 80 |
| ✳S3 | 20 | #16 | 2 | 680 | 21 |
| REINFORCING STEEL | | | | kg. | 1707 |
| ✳EPOXY COATED REINFORCING STEEL | | | | kg. | 1598 |
| CLASS AA CONCRETE BREAKDOWN | | | | | |
| POUR 1 SLAB | | | | C.M. | 16.6 |
| POUR 2 RAIL | | | | C.M. | 1.8 |
| CLASS AA CONCRETE | | | | C.M. | 18.4 |

## ELASTOMERIC CONCRETE

| END BENT NO. | △ ELASTOMERIC CONCRETE (CU. m) |
|---|---|
| 1 | 0.20 |
| | |
| TOTAL | 0.20 |

△ BASED ON THE MINIMUM BLOCKOUT SHOWN.

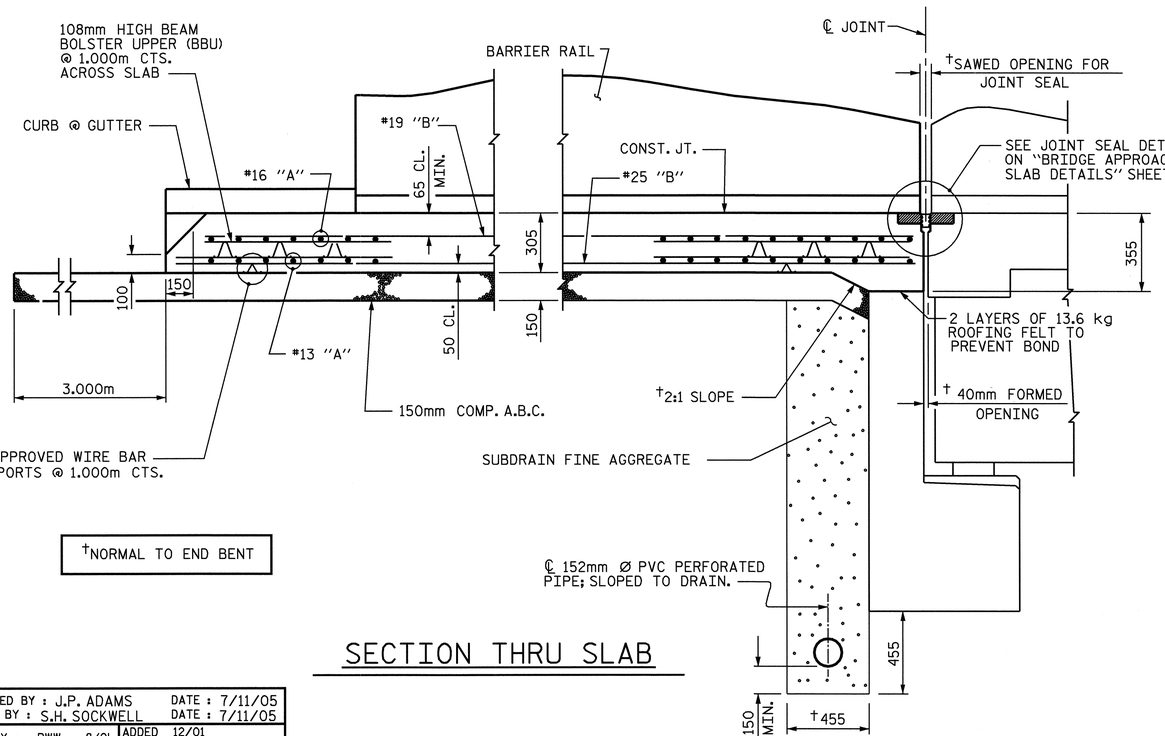


†NORMAL TO END BENT

## SECTION THRU SLAB

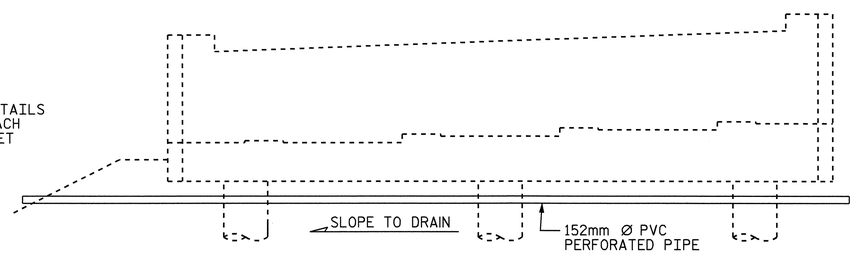


## ELEVATION OF END BENT DRAINAGE PIPE

FACING UPSTATION

| | | | |
|---|---|---|---|
| ASSEMBLED BY : J.P. ADAMS | DATE : 7/11/05 | | |
| CHECKED BY : S.H. SOCKWELL | DATE : 7/11/05 | | |
| DRAWN BY : RWW 8/01 | ADDED 12/01 | | |
| CHECKED BY : LES 8/01 | REV. 5/7/03 | RWW/JTE | |

28-NOV-2006 08:35
F:\Structures\bl443\Final\Bl443_sd_asl_01.dgn
klayne

PROJECT NO. B-1443
MITCHELL/YANCEY COUNTY
STATION: 12+94.300 -L-

SHEET 2 OF 4

STATE OF NORTH CAROLINA
DEPARTMENT OF TRANSPORTATION
RALEIGH

# BRIDGE APPROACH SLAB FOR FLEXIBLE PAVEMENT WITH BARRIER RAIL @ END BENT #1

| REVISIONS | | | | | | SHEET NO. |
|---|---|---|---|---|---|---|
| NO. | BY: | DATE: | NO. | BY: | DATE: | S-87 |
| 1 | | | 3 | | | TOTAL SHEETS |
| 2 | | | 4 | | | 91 |

STD. NO. BAS5SM

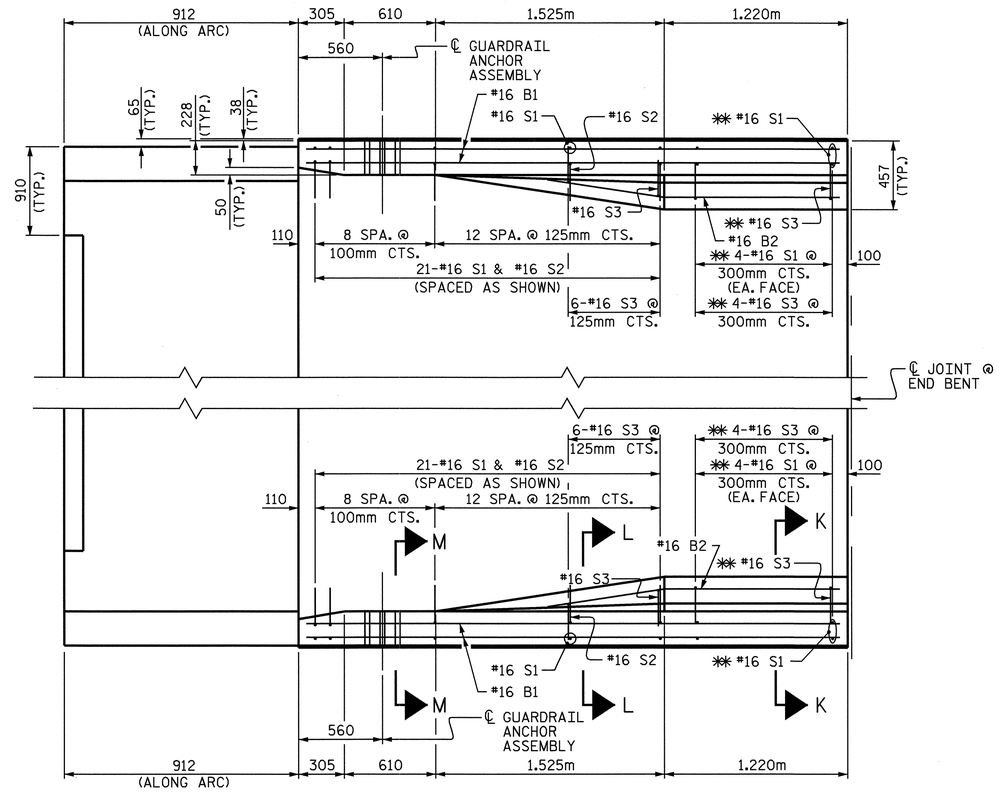


PLAN

BEGIN APPROACH SLAB SHOWN

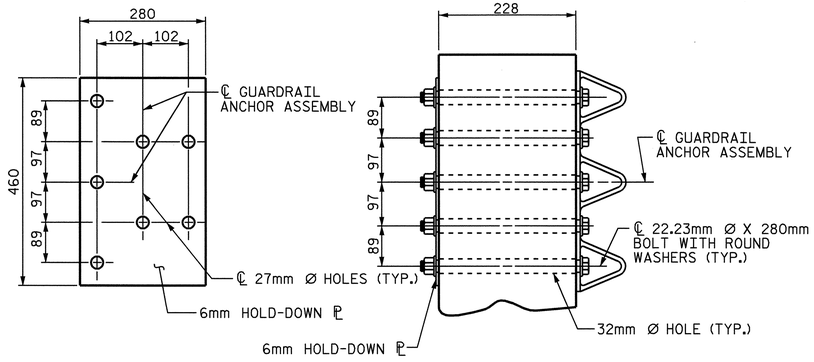


PLAN SECTION E-E

## GUARDRAIL ANCHOR ASSEMBLY DETAILS

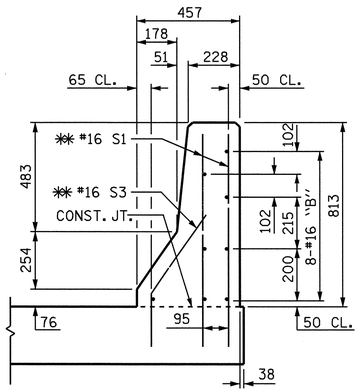


SECTION K-K

✱✱ ADHESIVELY ANCHORED

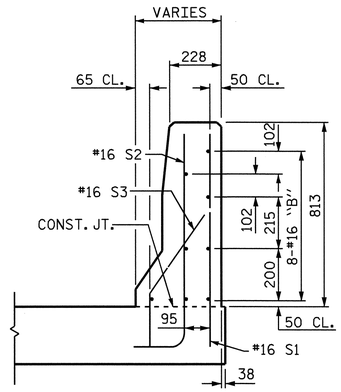


SECTION L-L




SKETCH SHOWING POINTS OF ATTACHMENT

✱ INDICATES POINTS OF ATTACHMENT

## NOTES

THE GUARDRAIL ANCHOR ASSEMBLY SHALL CONSIST OF A 6mm HOLD DOWN PLATE AND 7 - 22.23mm Ø BOLTS WITH NUTS AND WASHERS.

THE HOLD-DOWN PLATE SHALL CONFORM TO AASHTO M270 GRADE 250. AFTER FABRICATION, THE HOLD-DOWN PLATE SHALL BE GALVANIZED IN ACCORDANCE WITH AASHTO M111.

BOLTS SHALL CONFORM TO THE REQUIREMENTS OF ASTM A307 AND NUTS SHALL CONFORM TO THE REQUIREMENTS OF AASHTO M291M. BOLTS, NUTS AND WASHERS SHALL BE GALVANIZED. AT THE CONTRACTOR'S OPTION, STAINLESS STEEL BOLTS, NUTS AND WASHERS MAY BE USED AS AN ALTERNATE FOR THE 22.23mm Ø GALVANIZED BOLTS, NUTS AND WASHERS. THEY SHALL CONFORM TO OR EXCEED THE MECHANICAL REQUIREMENTS OF ASTM A307. THE USE OF THIS ALTERNATE SHALL BE APPROVED BY THE ENGINEER.

AFTER INSTALLATION, THE EXPOSED THREAD OF THE BOLT SHALL BE BURRED WITH A SHARP POINTED TOOL.

THE COST OF THE GUARDRAIL ANCHOR ASSEMBLIES WITH BOLTS, NUTS AND WASHERS COMPLETE IN PLACE, SHALL BE INCLUDED IN THE LUMP SUM CONTRACT PRICE BID FOR BRIDGE APPROACH SLABS.

THE 32mm Ø HOLES SHALL BE FORMED OR DRILLED WITH A CORE BIT. IMPACT TOOLS WILL NOT BE PERMITTED. ANY CONCRETE DAMAGED BY THIS WORK SHALL BE REPAIRED TO THE SATISFACTION OF THE ENGINEER.

THE #16 S1 AND #16 S3 BARS SHALL BE INSTALLED, WHERE NOTED ON THE PLANS, USING AN ADHESIVE ANCHORING SYSTEM AFTER SAWING THE JOINT. THE YIELD LOAD FOR THE #16 S1 AND #16 S3 BARS IS 82.7 kN. FIELD TESTING FOR THE ADHESIVE BONDING SYSTEM IS NOT REQUIRED.

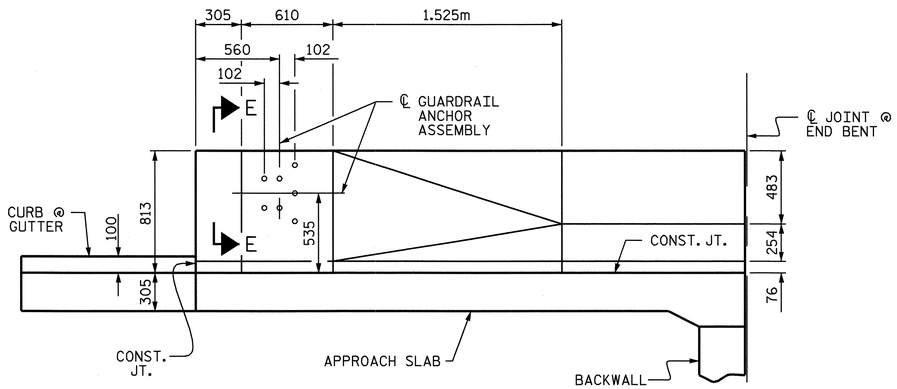


ELEVATION

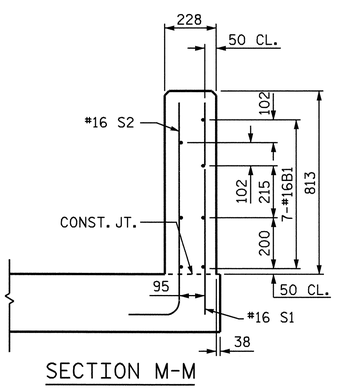


SECTION M-M

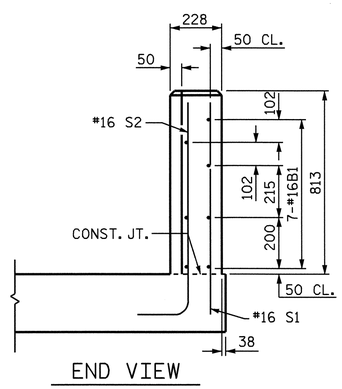


END VIEW

NORTH CAROLINA PROFESSIONAL SEAL 20211 ENGINEER THOMAS G. PAYNE
10/18/06

PROJECT NO. B-1443

MITCEHLL/YANCEY COUNTY

STATION: 12+94.300 -L-

SHEET 3 OF 4

STATE OF NORTH CAROLINA
DEPARTMENT OF TRANSPORTATION
RALEIGH

# BRIDGE APPROACH SLAB DETAILS FOR FLEXIBLE PAVEMENT WITH BARRIER RAIL @ END BENT #1

| REVISIONS | | | | | | SHEET NO. |
|---|---|---|---|---|---|---|
| NO. | BY: | DATE: | NO. | BY: | DATE: | S-88 |
| 1 | | | 3 | | | TOTAL SHEETS |
| 2 | | | 4 | | | 91 |

STD. NO. BAS3SM

| | |
|---|---|
| ASSEMBLED BY : J.P. ADAMS | DATE : 7/11/05 |
| CHECKED BY : S.H. SOCKWELL | DATE : 7/11/05 |
| DRAWN BY : RWW 8/01 | REV. 5/7/03 RWW/JTE |
| CHECKED BY : LES 8/01 | |

18-OCT-2006 11:47
F:\Structures\bl443\Final\Bl443_sd_asl_01.dgn
klayne

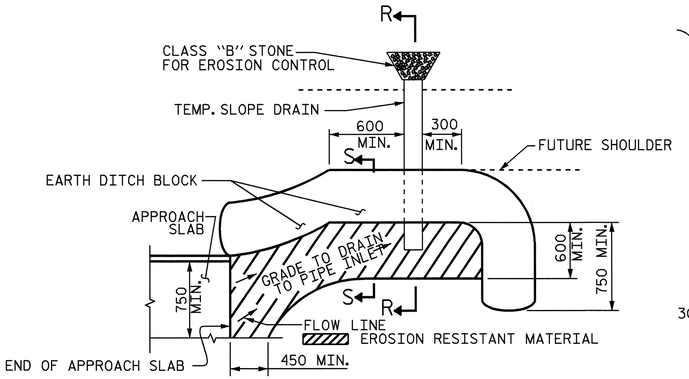


NOTE: IMMEDIATELY AFTER THE CONSTRUCTION OF THE APPROACH SLAB, THE CONTRACTOR SHALL PROVIDE TEMPORARY BERM AND SLOPE DRAIN. CONTRACTOR SHALL GRADE TO PIPE INLET AND PROVIDE EROSION RESISTANT MATERIAL AS SHOWN. THE EROSION RESISTANT MATERIAL SHALL BE EITHER 1) ASPHALT PLANT MIX, TYPE 1 OR TYPE 2, MIN. 50mm DEPTH, 2) EROSION CONTROL MAT, OR 3) CONCRETE, AS DIRECTED BY THE ENGINEER. THE SLOPE DRAIN SHALL CONSIST OF A NON-PERFORATED TEMPORARY DRAINAGE PIPE, 305mm IN DIAMETER.

PLAN VIEW

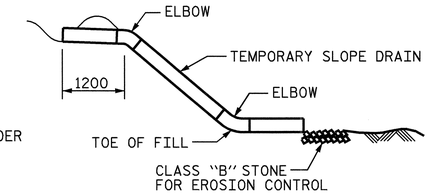


SECTION R-R

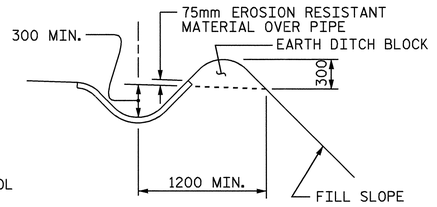


SECTION S-S

# TEMPORARY BERM AND SLOPE DRAIN DETAILS

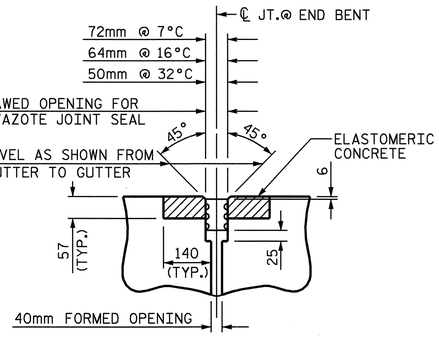


SECTION C-C @ END BENT #1

EVAZOTE JOINT SEAL




SECTION A-A

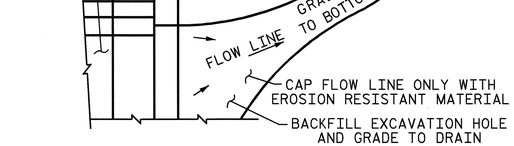


NOTE: IF THE APPROACH SLAB IS NOT CONSTRUCTED IMMEDIATELY AFTER THE BACKFILLING OF THE END BENT EXCAVATION, GRADE TO DRAIN TO THE BOTTOM OF THE SLOPE AND PROVIDE EROSION RESISTANT MATERIAL, SUCH AS FIBERGLASS ROVING OR AS DIRECTED BY THE ENGINEER TO PREVENT SOIL EROSION AND TO PROTECT THE AREA ADJACENT TO THE STRUCTURE. THE CONTRACTOR WILL BE REQUIRED TO REMOVE THESE MATERIALS PRIOR TO CONSTRUCTION OF THE APPROACH SLAB.

TEMPORARY DRAINAGE DETAIL

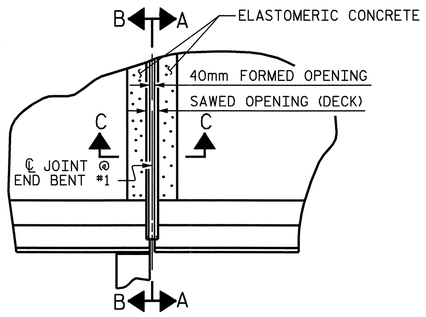


PLAN

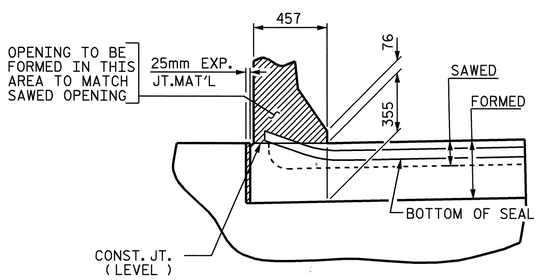


SECTION B-B

# JOINT SEAL DETAILS @ END BENT

(FOR BARRIER RAIL)

PROJECT NO. B-1443

MITCHELL/YANCEY COUNTY

STATION: 12+94.300 -L-

SHEET 4 OF 4

STATE OF NORTH CAROLINA
DEPARTMENT OF TRANSPORTATION
RALEIGH

## BRIDGE APPROACH SLAB DETAILS @ END BENT #1

| REVISIONS | | | | | | SHEET NO. |
|---|---|---|---|---|---|---|
| NO. | BY: | DATE: | NO. | BY: | DATE: | S-89 |
| 1 | | | 3 | | | TOTAL SHEETS |
| 2 | | | 4 | | | 91 |

NORTH CAROLINA PROFESSIONAL SEAL 20211 ENGINEER THOMAS G. PAYNE
10/19/06

| | | |
|---|---|---|
| ASSEMBLED BY : J.P. ADAMS | DATE : 7/11/05 | |
| CHECKED BY : S.H. SOCKWELL | DATE : 7/11/05 | |
| DRAWN BY : FCJ 11/88 | REV. 8/16/99 | RAL/LES |
| CHECKED BY : ARB 11/88 | REV. 10/17/00 | RWW/LES |
| | REV. 5/7/03 | RWW/JTE |

18-OCT-2006 11:47
F:\Structures\bl443\Final\Bl443_sd_asl_01.dgn
klayne

STD. NO. BAS10SM

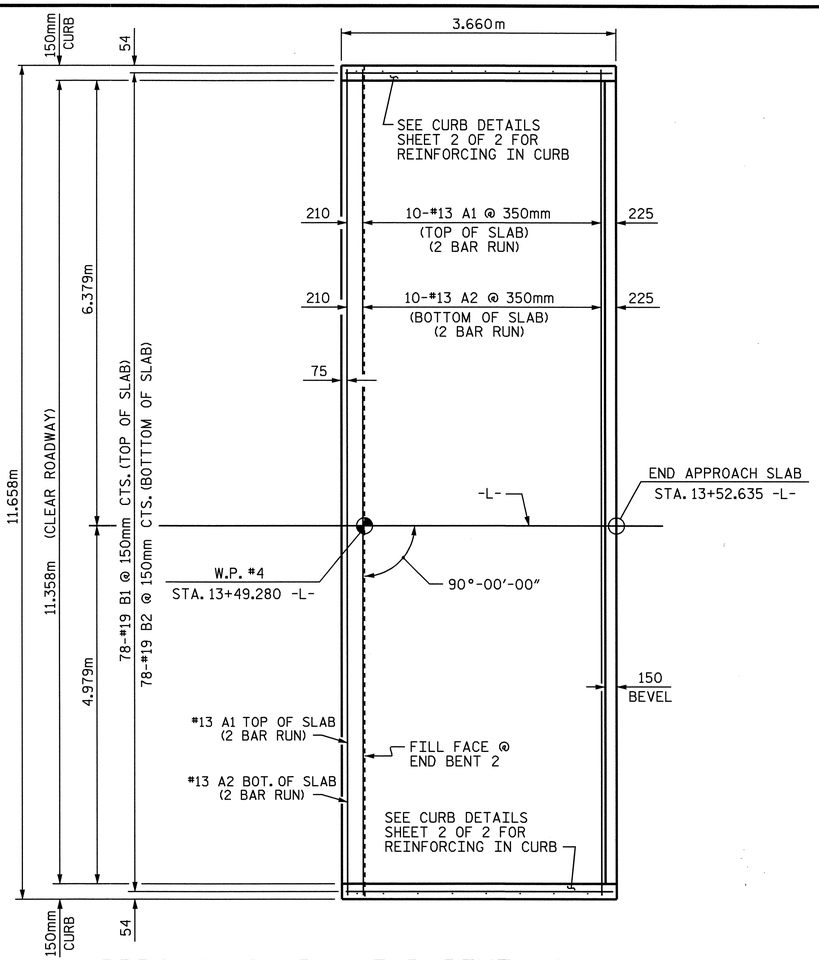


## APPROACH SLAB @ END BENT #2

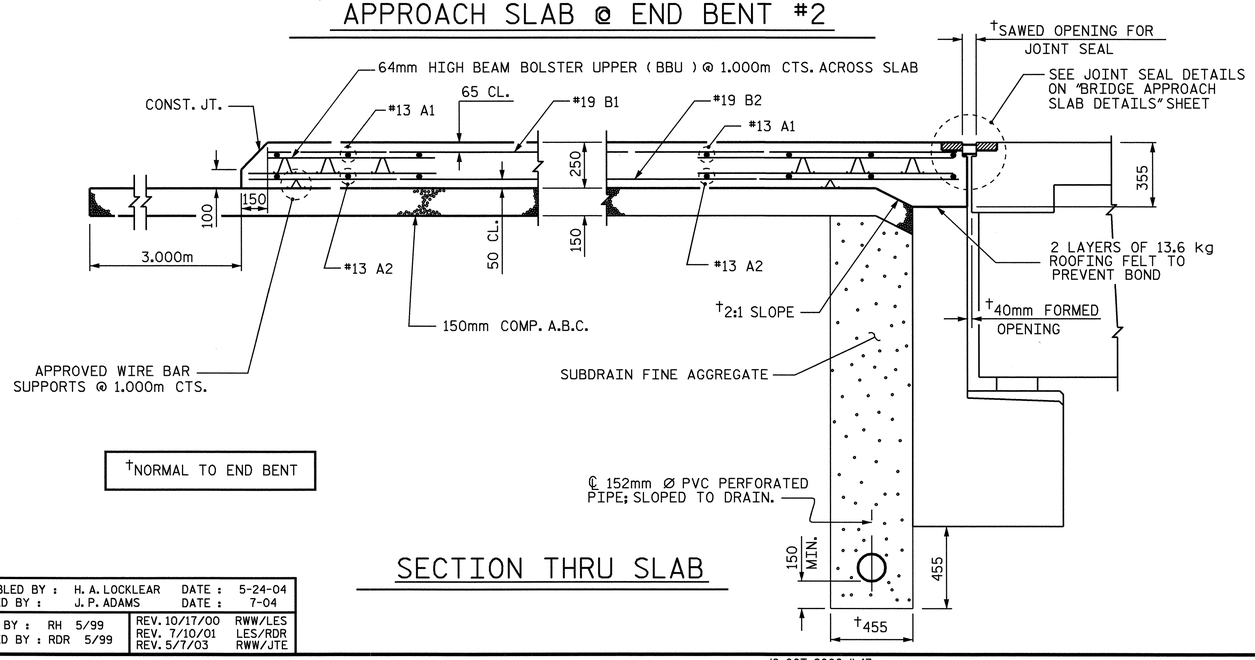


†NORMAL TO END BENT

## SECTION THRU SLAB

## NOTES

APPROACH SLAB SHALL NOT BE CONSTRUCTED PRIOR TO COMPLETION OF THE BRIDGE DECK.

SUBDRAIN FINE AGGREGATE IS TO BE CONTINUOUS ALONG FILL FACE OF BACKWALL AND END BENT FROM OUTSIDE EDGE TO OUTSIDE EDGE OF APPROACH SLAB.

TEMPORARY DRAINAGE AND TEMPORARY BERM AND SLOPE DRAINS WILL BE PAID FOR UNDER THE LUMP SUM PRICE FOR BRIDGE APPROACH SLAB.

AREA BETWEEN THE WINGWALL AND APPROACH SLAB SHALL BE GRADED TO DRAIN THE WATER AWAY FROM THE FILL FACE OF THE BRIDGE.

THE 150mm COMP. A.B.C. SHALL EXTEND 3m BEYOND THE END OF THE APPROACH SLAB AND 300mm OUTSIDE OF EACH EDGE OF THE SLAB.

THE CONTRACTOR MAY USE 100mm TYPE B-25.0B ASPHALT CONCRETE COURSE IN LIEU OF 150mm COMP. A.B.C. IF THIS OPTION IS USED, THE BASE COURSE SHALL EXTEND 300mm BEYOND THE END OF THE APPROACH SLAB AND THE WIDTH SHALL BE THE SAME AS THAT OF THE APPROACH SLAB.

THE CONTRACTOR MAY USE 125mm CLASS "A" CONCRETE BASE IN LIEU OF 150mm COMP. A.B.C. IF THIS OPTION IS USED, THE CONCRETE BASE SHALL EXTEND 300mm BEYOND THE END OF THE APPROACH SLAB AND THE WIDTH SHALL BE THE SAME AS THAT OF THE APPROACH SLAB. THE CONCRETE SHALL BE FINISHED TO A SMOOTH SURFACE AND A LAYER OF 13.6 kg ROOFING FELT SHALL BE PLACED BETWEEN THE CONCRETE BASE AND THE APPROACH SLAB TO PREVENT BOND. THE APPROACH SLAB SHALL NOT BE CAST UNTIL THE CONCRETE BASE HAS REACHED AN AGE OF THREE CURING DAYS.

THE JOINT SHALL BE SAWED PRIOR TO THE CASTING OF THE BARRIER RAIL AND CURB.

PAYMENT FOR APPROACH SLAB GROOVING IS INCLUDED IN THE "GROOVING BRIDGE FLOORS PAY ITEM".

FOR EVAZOTE JOINT SEALS, SEE SPECIAL PROVISIONS.

THE NOMINAL UNCOMPRESSED SEAL WIDTH OF THE EVAZOTE JOINT SEAL SHALL BE 87mm.

THE AREAS BETWEEN THE WINGWALLS AND THE APPROACH SLABS SHALL BE PAVED, SEE ROADWAY PLANS.

DOWELS MAY BE PUSHED INTO GREEN CONCRETE AFTER THE SLAB HAS BEEN SCREEDED AND FLOAT FINISHED EXCEPT AS NOTED ON THE PLANS.

THE COST OF THE 152mm Ø PVC PERFORATED PIPE AND THE SUBDRAIN FINE AGGREGATE SHALL BE INCLUDED IN THE COST OF THE APPROACH SLAB.

FOR ELASTOMERIC CONCRETE, SEE SPECIAL PROVISIONS.

### BILL OF MATERIAL
### APPROACH SLAB AT EB #2

| BAR | NO. | SIZE | TYPE | LENGTH | WEIGHT |
|---|---|---|---|---|---|
| ✳ A1 | 22 | #13 | STR | 6100 | 133 |
| A2 | 22 | #13 | STR | 6060 | 133 |
| | | | | | |
| ✳ B1 | 78 | #19 | STR | 3400 | 593 |
| B2 | 78 | #19 | STR | 3560 | 621 |
| ✳ B3 | 2 | #13 | STR | 3420 | 7 |
| | | | | | |
| ✳ D1 | 16 | #13 | STR | 300 | 5 |
| | | | | | |
| REINFORCING STEEL | | | | kg. | 754 |
| ✳ EPOXY COATED REINFORCING STEEL | | | | kg. | 738 |
| | | | | | |
| CLASS AA CONCRETE | | | | C.M. | 11.3 |

### ELASTOMERIC CONCRETE

| END BENT NO. | △ ELASTOMERIC CONCRETE (CU. m) |
|---|---|
| 2 | 0.20 |
| | |
| TOTAL | 0.20 |

△ BASED ON THE MINIMUM BLOCKOUT SHOWN.

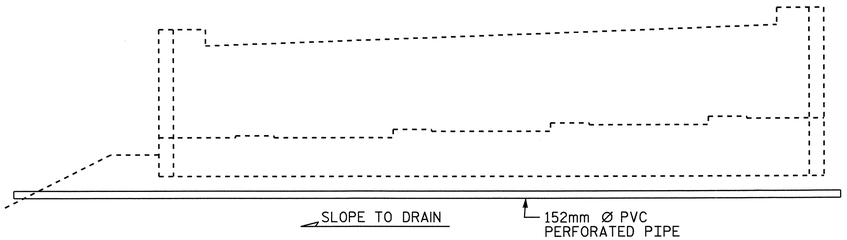


## ELEVATION OF END BENT DRAINAGE PIPE

FACING UPSTATION

PROJECT NO. B-1443
MITCHELL/YANCEY COUNTY
STATION: 12+94.300 -L-

SHEET 1 OF 2

STATE OF NORTH CAROLINA
DEPARTMENT OF TRANSPORTATION
RALEIGH

# BRIDGE APPROACH SLAB FOR FLEXIBLE PAVEMENT @ END BENT #2

| REVISIONS | | | | | | SHEET NO. |
|---|---|---|---|---|---|---|
| NO. | BY: | DATE: | NO. | BY: | DATE: | S-90 |
| 1 | | | 3 | | | TOTAL SHEETS |
| 2 | | | 4 | | | 91 |

NORTH CAROLINA PROFESSIONAL SEAL 20211 ENGINEER THOMAS G. PAYNE
6/18/06

STD. NO. BAS1SM

| | | | |
|---|---|---|---|
| ASSEMBLED BY : H. A. LOCKLEAR | DATE : 5-24-04 | | |
| CHECKED BY : J. P. ADAMS | DATE : 7-04 | | |
| DRAWN BY : RH 5/99 | REV. 10/17/00 | RWW/LES | |
| CHECKED BY : RDR 5/99 | REV. 7/10/01 | LES/RDR | |
| | REV. 5/7/03 | RWW/JTE | |

18-OCT-2006 11:47
F:\Structures\bl443\Final\Bl443_sd_as2_01.dgn
klayne

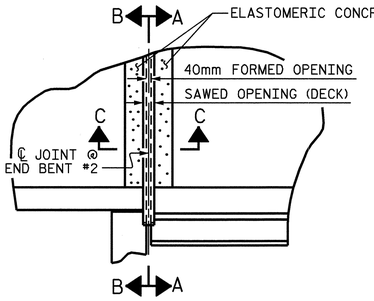


PLAN

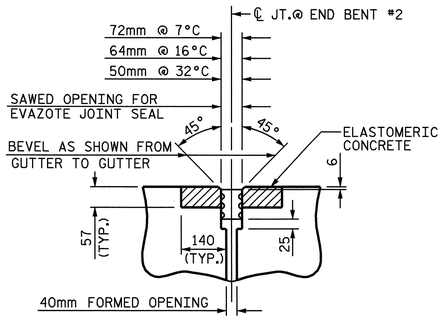


SECTION C-C @ END BENT #2




SECTION A-A

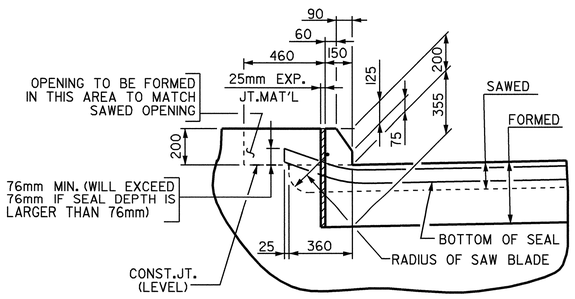


SECTION B-B

## JOINT SEAL DETAILS AT END BENT #2

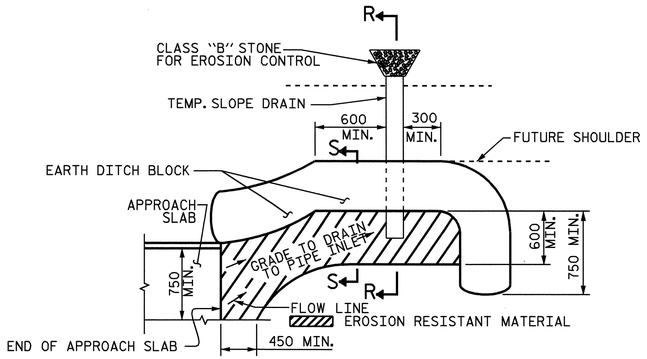


NOTE: IMMEDIATELY AFTER THE CONSTRUCTION OF THE APPROACH SLAB, THE CONTRACTOR SHALL PROVIDE TEMPORARY BERM AND SLOPE DRAIN. CONTRACTOR SHALL GRADE TO PIPE INLET AND PROVIDE EROSION RESISTANT MATERIAL AS SHOWN. THE EROSION RESISTANT MATERIAL SHALL BE EITHER 1) ASPHALT PLANT MIX, TYPE 1 OR TYPE 2, MIN. 50mm DEPTH, 2) EROSION CONTROL MAT, OR 3) CONCRETE, AS DIRECTED BY THE ENGINEER. THE SLOPE DRAIN SHALL CONSIST OF A NON-PERFORATED TEMPORARY DRAINAGE PIPE, 305mm IN DIAMETER.

PLAN VIEW

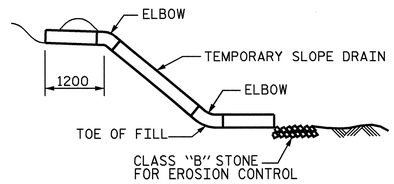


SECTION R-R

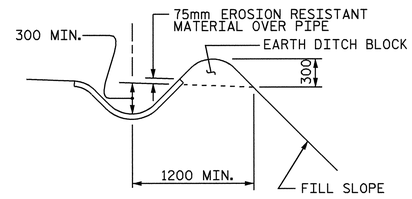


SECTION S-S

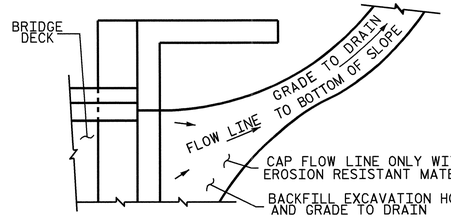


NOTE: IF THE APPROACH SLAB IS NOT CONSTRUCTED IMMEDIATELY AFTER THE BACKFILLING OF THE END BENT EXCAVATION, GRADE TO DRAIN TO THE BOTTOM OF THE SLOPE AND PROVIDE EROSION RESISTANT MATERIAL, SUCH AS FIBERGLASS ROVING OR AS DIRECTED BY THE ENGINEER TO PREVENT SOIL EROSION AND TO PROTECT THE AREA ADJACENT TO THE STRUCTURE. THE CONTRACTOR WILL BE REQUIRED TO REMOVE THESE MATERIALS PRIOR TO CONSTRUCTION OF THE APPROACH SLAB.

TEMPORARY DRAINAGE DETAIL

# TEMPORARY BERM AND SLOPE DRAIN DETAILS

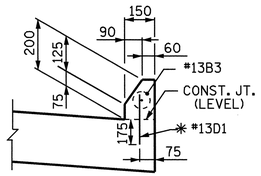


SECTION M-M

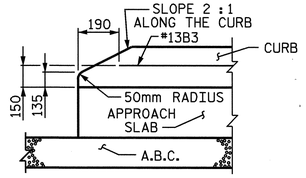


DETAIL AT END OF CURB WITHOUT SPECIAL DRAINAGE

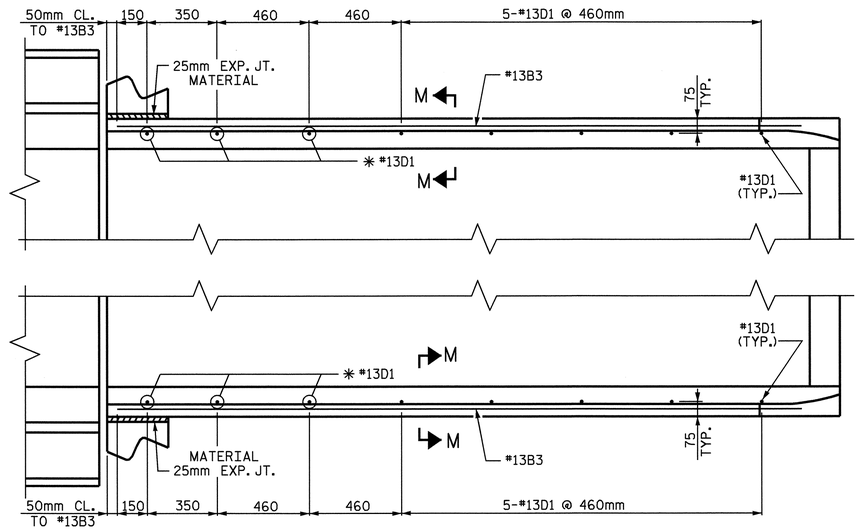


APPROACH SLAB WITHOUT SHOULDER BERM GUTTER

## CURB DETAILS

* THESE DOWELS ARE TO BE PLACED AFTER SAWING OF THE JOINT. THE HOLES SHALL BE DRILLED AND THE DOWELS GROUTED IN PLACE

NORTH CAROLINA PROFESSIONAL SEAL 20211 ENGINEER THOMAS G. PAYNE
10/18/06

PROJECT NO. B-1443
MITCHELL/YANCEY COUNTY
STATION 12+93.300 -L-

SHEET 2 OF 2

STATE OF NORTH CAROLINA
DEPARTMENT OF TRANSPORTATION
RALEIGH

BRIDGE APPROACH SLAB DETAILS

| REVISIONS | | | | | | SHEET NO. |
|---|---|---|---|---|---|---|
| NO. | BY: | DATE: | NO. | BY: | DATE: | S-91 |
| 1 | | | 3 | | | TOTAL SHEETS |
| 2 | | | 4 | | | 91 |

DRAWN BY : H. A. LOCKLEAR DATE : 5-24-04
CHECKED BY : J. P. ADAMS DATE : 7-04

18-OCT-2006 11:47
F:\Structures\b1443\Final\B1443_sd_as2_01.dgn
klayne

# STANDARD NOTES

## DESIGN DATA:

| | |
|---|---|
| SPECIFICATIONS | A.A.S.H.T.O. (CURRENT) |
| LIVE LOAD | SEE PLANS |
| IMPACT ALLOWANCE | SEE A.A.S.H.T.O. |
| STRESS IN EXTREME FIBER OF | |
| STRUCTURAL STEEL - AASHTO M270 GRADE 36 | 20,000 LBS. PER SQ. IN. |
| - AASHTO M270 GRADE 50W | 27,000 LBS. PER SQ. IN. |
| - AASHTO M270 GRADE 50 | 27,000 LBS. PER SQ. IN. |
| REINFORCING STEEL IN TENSION | |
| GRADE 60 | 24,000 LBS. PER SQ. IN. |
| CONCRETE IN COMPRESSION | 1,200 LBS. PER SQ. IN. |
| CONCRETE IN SHEAR | SEE A.A.S.H.T.O. |
| STRUCTURAL TIMBER - TREATED OR | |
| UNTREATED - EXTREME FIBER STRESS | 1,800 LBS. PER SQ. IN. |
| COMPRESSION PERPENDICULAR TO GRAIN OF TIMBER | 375 LBS. PER SQ. IN. |
| EQUIVALENT FLUID PRESSURE OF EARTH | 30 LBS. PER CU. FT. (MINIMUM) |

## MATERIAL AND WORKMANSHIP:

EXCEPT AS MAY OTHERWISE BE SPECIFIED ON PLANS OR IN THE SPECIAL PROVISIONS, ALL MATERIAL AND WORKMANSHIP SHALL BE IN ACCORDANCE WITH THE 2002 STANDARD SPECIFICATIONS "FOR ROADS AND STRUCTURES" OF THE N. C. DEPARTMENT OF TRANSPORTATION.

STEEL SHEET PILING FOR PERMANENT OR TEMPORARY APPLICATIONS SHALL BE HOT ROLLED.

## CONCRETE:

UNLESS OTHERWISE REQUIRED ON PLANS, CLASS A CONCRETE SHALL BE USED FOR ALL PORTIONS OF ALL STRUCTURES WITH THE EXCEPTION THAT: CLASS AA CONCRETE SHALL BE USED IN BRIDGE SUPERSTRUCTURES, ABUTMENT BACKWALLS, AND APPROACH SLABS; CLASS B CONCRETE SHALL BE USED FOR SLOPE PROTECTION AND RIP RAP; AND CLASS S SHALL BE USED FOR UNDERWATER FOOTING SEALS.

## CONCRETE CHAMFERS:

UNLESS OTHERWISE NOTED ON THE PLANS, ALL EXPOSED CORNERS ON STRUCTURES SHALL BE CHAMFERED 3/4" WITH THE FOLLOWING EXCEPTIONS: TOP CORNERS OF CURBS MAY BE ROUNDED TO 1-1/2" RADIUS WHICH IS BUILT INTO CURB FORMS; CORNERS OF TRANSVERSE FLOOR EXPANSION JOINTS SHALL BE ROUNDED WITH A 1/4" FINISHING TOOL UNLESS OTHERWISE REQUIRED ON PLANS; AND CORNERS OF EXPANSION JOINTS IN THE ROADWAY FACES AND TOPS OF CURBS AND SIDEWALKS SHALL BE ROUNDED TO A 1/4" RADIUS WITH A FINISHING STONE OR TOOL UNLESS OTHERWISE REQUIRED ON PLANS.

## DOWELS:

DOWELS WHEN INDICATED ON PLANS AS FOR CULVERT EXTENSIONS, SHALL BE EMBEDDED AT LEAST 12" INTO THE OLD CONCRETE AND GROUTED INTO PLACE WITH 1:2 CEMENT MORTAR.

## ALLOWANCE FOR DEAD LOAD DEFLECTION, SETTLEMENT, ETC. IN CASTING SUPERSTRUCTURES:

BRIDGES SHALL BE BUILT ON THE GRADE OR VERTICAL CURVE SHOWN ON PLANS. SLABS, CURBS AND PARAPETS SHALL CONFORM TO THE GRADE OR CURVE.

ALL DIMENSIONS WHICH ARE GIVEN IN SECTION AND ARE AFFECTED BY DEAD LOAD DEFLECTIONS ARE DIMENSIONS AT CENTER LINE OF BEARING UNLESS OTHERWISE NOTED ON PLANS. IN SETTING FORMS FOR STEEL BEAM BRIDGES AND PRESTRESSED CONCRETE GIRDER BRIDGES, ADJUSTMENTS SHALL BE MADE DUE TO THE DEAD LOAD DEFLECTIONS FOR THE ELEVATIONS SHOWN. WHERE BLOCKS ARE SHOWN OVER BEAMS FOR BUILDING UP TO THE SLAB, THE VERTICAL DIMENSIONS OF THE BLOCKS SHALL BE ADJUSTED BETWEEN BEARINGS TO COMPENSATE FOR DEAD LOAD DEFLECTIONS, VERTICAL CURVE ORDINATE, AND ACTUAL BEAM CAMBER. WHERE BOTTOM OF SLAB IS IN LINE WITH BOTTOM OF TOP FLANGES, DEPTH OF SLAB BETWEEN BEARINGS SHALL BE ADJUSTED TO COMPENSATE FOR DEAD LOAD DEFLECTION, VERTICAL CURVE ORDINATE, AND ACTUAL BEAM CAMBER.

IN SETTING FALSEWORK AND FORMS FOR REINFORCED CONCRETE SPANS, AN ALLOWANCE SHALL BE MADE FOR DEAD LOAD DEFLECTIONS, SETTLEMENT OF FALSEWORK, AND PERMANENT CAMBER WHICH SHALL BE PROVIDED FOR IN ADDITION TO THE ELEVATIONS SHOWN. AFTER REMOVAL OF THE FALSEWORK, THE FINISHED STRUCTURES SHALL CONFORM TO THE PROFILE AND ELEVATIONS SHOWN ON THE PLANS AND CONSTRUCTION ELEVATIONS FURNISHED BY THE ENGINEER.

DETAILED DRAWINGS FOR FALSEWORK OR FORMS FOR BRIDGE SUPERSTRUCTURE AND ANY STRUCTURE OR PARTS OF A STRUCTURE AS NOTED ON THE PLANS SHALL BE SUBMITTED TO THE ENGINEER FOR APPROVAL BEFORE CONSTRUCTION OF THE FALSEWORK OR FORMS IS STARTED.

## REINFORCING STEEL:

ALL REINFORCING STEEL SHALL BE DEFORMED WITH THE EXCEPTION OF #2 BARS WHICH MAY BE FABRICATED FROM COLD DRAWN STEEL WIRE. DIMENSIONS RELATIVE TO PLACEMENT OF REINFORCING ARE TO CENTERS OF BARS UNLESS OTHERWISE INDICATED IN THE PLANS. DIMENSIONS ON BAR DETAILS ARE TO CENTERS OF BARS OR ARE OUT TO OUT AS INDICATED ON PLANS.

WIRE BAR SUPPORTS SHALL BE PROVIDED FOR REINFORCING STEEL WHERE INDICATED ON THE PLANS. WHEN BAR SUPPORT PIECES ARE PLACED IN CONTINUOUS LINES, THEY SHALL BE SO PLACED THAT THE ENDS OF THE SUPPORTING WIRES SHALL BE LAPPED TO LOCK LEGS ON ADJOINING PIECES.

## STRUCTURAL STEEL:

AT THE CONTRACTOR'S OPTION, HE MAY SUBSTITUTE 7/8" Ø SHEAR STUDS FOR THE 3/4" Ø STUDS SPECIFIED ON THE PLANS. THIS SUBSTITUTION SHALL BE MADE AT THE RATE OF 3 - 7/8" Ø STUDS FOR 4 - 3/4" Ø STUDS, AND STUD SPACING CHANGES SHALL BE MADE AS NECESSARY TO PROVIDE THE SAME EQUIVALENT NUMBER OF 7/8" Ø STUDS ALONG THE BEAM AS SHOWN FOR 3/4" Ø STUDS BASED ON THE RATIO OF 3 - 7/8" Ø STUDS FOR 4 - 3/4" Ø STUDS. STUDS OF THE LENGTH SPECIFIED ON THE PLANS MUST BE PROVIDED. THE MAXIMUM SPACING SHALL BE 2'-0".

EXCEPT AT THE INTERIOR SUPPORTS OF CONTINUOUS BEAMS WHERE THE COVER PLATE IS IN CONTACT WITH BEARING PLATE, THE CONTRACTOR MAY, AT HIS OPTION, SUBSTITUTE FOR THE COVER PLATES DESIGNATED ON THE PLANS COVER PLATES OF THE EQUIVALENT AREA PROVIDED THESE PLATES ARE AT LEAST 5/16" IN THICKNESS AND DO NOT EXCEED A WIDTH EQUAL TO THE FLANGE WIDTH LESS 2" OR A THICKNESS EQUAL TO 2 TIMES THE FLANGE THICKNESS. THE SIZE OF FILLET WELDS SHALL CONFORM TO THE REQUIREMENTS OF THE CURRENT ANSI/AASHTO/AWS "BRIDGE WELDING CODE". ELECTROSLAG WELDING WILL NOT BE PERMITTED.

PLACEMENT OF BEAM OR GIRDER MEMBERS ON TRUCKS FOR HAULING SHALL BE DONE IN COMPLIANCE WITH LIMITS SHOWN ON SKETCHES PROVIDED TO THE MATERIALS AND TEST UNIT APPROVED BY THE STRUCTURE DESIGN UNIT DATED MAY 8, 1991. THESE SKETCHES PRIMARILY LIMIT THE UNSUPPORTED CANTILEVER LENGTH OF MEMBERS. WHEN THE CONTRACTOR WISHES TO PLACE MEMBERS ON TRUCKS NOT IN ACCORDANCE WITH THESE LIMITS, TO SHIP BY RAIL, TO ATTACH SHIPPING RESTRAINTS TO THE MEMBERS OR TO INVERT MEMBERS, HE SHALL SUBMIT A SKETCH FOR APPROVAL PRIOR TO SHIPPING. SEE ALSO ARTICLE 1072-11.

WITH THE SOLE EXCEPTION OF EDGES AT SURFACES WHICH BEAR ON OTHER SURFACES, ALL SHARP EDGES AND ENDS OF SHAPES AND PLATES SHALL BE SLIGHTLY ROUNDED BY SUITABLE MEANS TO A RADIUS OF APPROXIMATELY 1/16 INCH OR EQUIVALENT FLAT SURFACE AT A SUITABLE ANGLE PRIOR TO PAINTING, GALVANIZING, OR METALLIZING.

## HANDRAILS AND POSTS:

METAL STANDARDS AND FACES OF THE CONCRETE END POSTS FOR THE METAL RAIL SHALL BE SET NORMAL TO THE GRADE OF THE CURB, UNLESS OTHERWISE SHOWN ON PLANS. THE METAL RAIL AND TOPS OF CONCRETE POSTS USED WITH THE ALUMINUM RAIL SHALL BE BUILT PARALLEL TO THE GRADE OF THE CURB.

METAL HANDRAILS SHALL BE IN ACCORDANCE WITH THE PLANS. RAILS SHALL BE AS MANUFACTURED FOR BRIDGE RAILING. CASTINGS SHALL BE OF A UNIFORM APPEARANCE. FINS AND OTHER DEFORMATIONS RESULTING FROM CASTING OR OTHERWISE SHALL BE REMOVED IN A MANNER SO THAT A UNIFORM COLORING OF THE COMPLETED CASTING SHALL BE OBTAINED. CASTINGS WITH DISCOLORATIONS OR OF NON-UNIFORM COLORING WILL NOT BE ACCEPTED. CERTIFIED MILL REPORTS ARE REQUIRED FOR METAL RAILS AND POSTS.

## SPECIAL NOTES:

GENERALLY, IN CASE OF DISCREPANCY, THIS STANDARD SHEET OF NOTES SHALL GOVERN OVER THE SPECIFICATIONS, BUT THE REMAINDER OF THE PLANS SHALL GOVERN OVER NOTES HEREON, AND SPECIAL PROVISIONS SHALL GOVERN OVER ALL. SEE SPECIFICATIONS ARTICLE 105-4.

ENGLISH

JANUARY, 1990

STD. NO. SN

REV. 6-16-95 EEM ω RGW REV. 6-27-02 RWW ω JTE