FRANKLIN COUNTY (BRIDGES #42 & #41) NCMA 5018B & 5017B

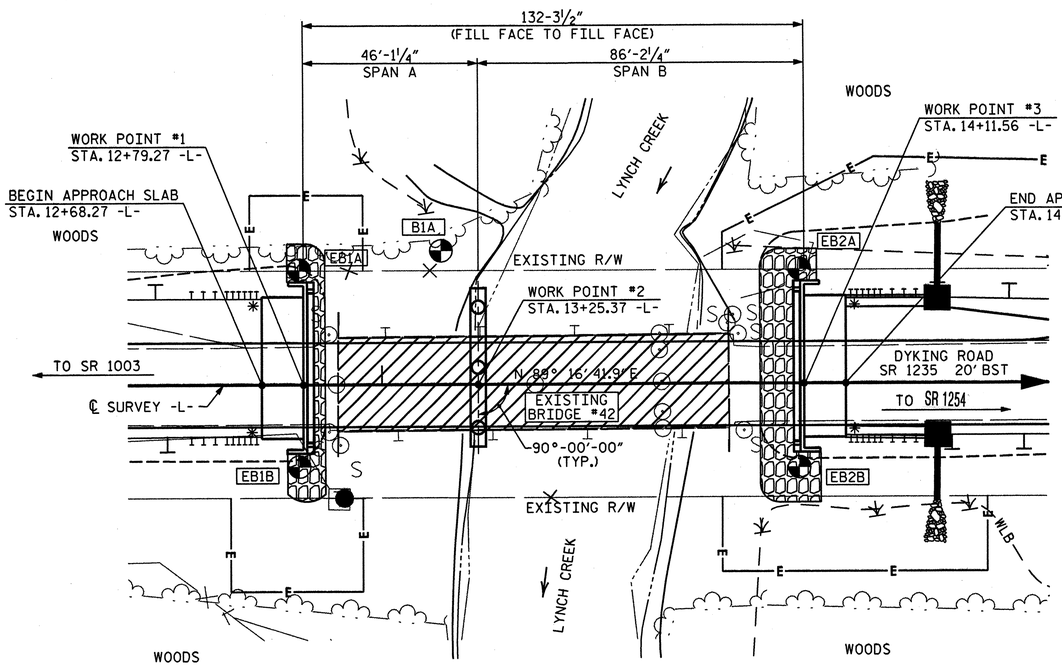

BRIDGE #42 PLAN

SCALE : 1" = 20'

DENOTES GEO-TECH BORE HOLE LOCATIONS.

* DENOTES GUARDRAIL CONNECTION REQ'D., SEE "APPROACH SLAB" SHEET.

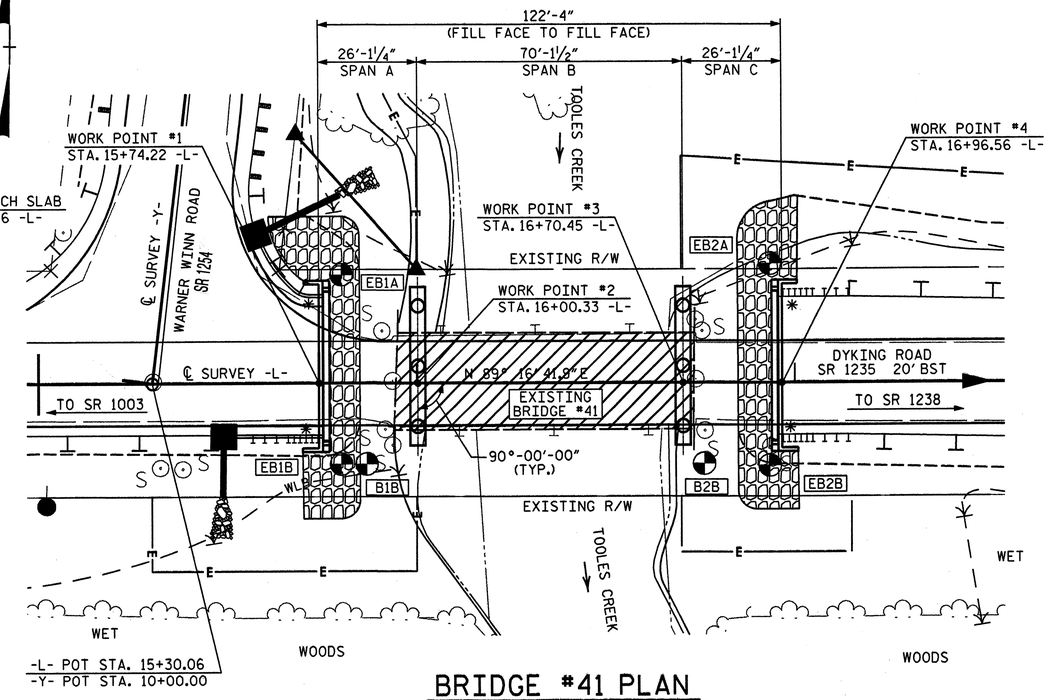

BRIDGE #41 PLAN

SCALE : 1" = 20'

DENOTES GEO-TECH BORE HOLE LOCATIONS.

* DENOTES GUARDRAIL CONNECTION REQ'D., SEE "GUARDRAIL ANCHOR UNIT" SHEET.

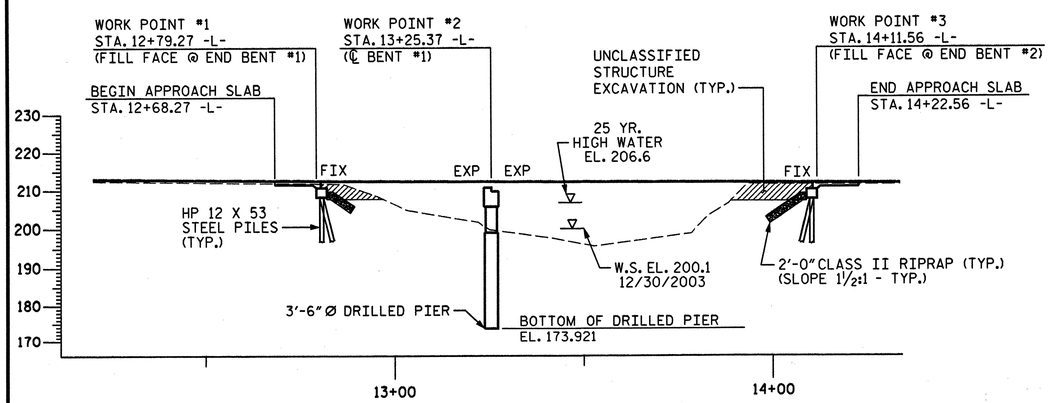

BRIDGE #42 PROFILE ALONG ℄ SURVEY

SCALE : 1" = 20'

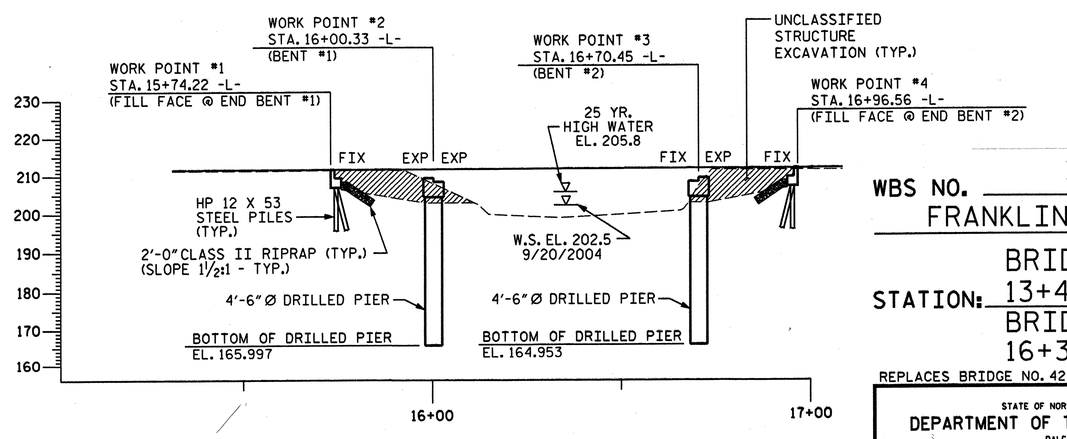

BRIDGE #41 PROFILE ALONG ℄ SURVEY

SCALE : 1" = 20'

WBS NO. 37661

FRANKLIN COUNTY

STATION: BRIDGE 42 13+45.42 -L- & BRIDGE 41 16+35.39 -L-

REPLACES BRIDGE NO. 42 & 41

STATE OF NORTH CAROLINA
DEPARTMENT OF TRANSPORTATION
RALEIGH

BRIDGES #42 & 41

(BRIDGES ON SR 1235 OVER LYNCH CREEK & TOOLES CREEK)

36' CLEAR ROADWAY - 90° SKEW

NORTH CAROLINA PROFESSIONAL SEAL 19831 ENGINEER DAVID B. SIMPSON, JR.
5-30-06

PLANS PREPARED BY:
SIMPSON ENGINEERS & ASSOCIATES
5520 Dillard Drive
Suite 120
Cary, NC 27518
(919) 852-0468
(919) 852-0598 (Fax)
www.simpsonengr.com

REVISIONS								SHEET NO.
NO.	BY:	DATE:	NO.	BY:	DATE:			1
1			3					TOTAL SHEETS
2			4					62

DRAWN BY : R. SEALEY DATE : 5/06
CHECKED BY : M. AVERETTE DATE : 5/06

5/30/2006 3:52:28 PM g:\bmu\franklin41\ncma5017b&5018b_sd_title.dgn

PROJECT REFERENCE	SHEET NO.
37661	2
ROADWAY DESIGN ENGINEER	

Prepared in the Office of: GIBSON ENGINEERS, PC

GENERAL NOTES:

2002 SPECIFICATIONS
EFFECTIVE: 01-15-02

GRADING AND SURFACING:

THE GRADE LINES SHOWN DENOTE THE FINISHED ELEVATION OF THE PROPOSED SURFACING AT GRADE POINTS SHOWN ON THE TYPICAL SECTIONS. GRADE LINES MAY BE ADJUSTED AT THEIR BEGINNING AND ENDING AND AT STRUCTURES AS DIRECTED BY THE ENGINEER IN ORDER TO SECURE A PROPER TIE-IN.

CLEARING:

CLEARING ON THIS PROJECT SHALL BE PERFORMED TO THE LIMITS ESTABLISHED BY METHOD II.

SUPERELEVATION:

ALL CURVES ON THIS PROJECT SHALL BE SUPERELEVATED IN ACCORDANCE WITH STD. NO. 225.04 USING THE RATE OF SUPERELEVATION AND RUNOFF SHOWN ON THE PLANS. SUPERELEVATION IS TO BE REVOLVED ABOUT THE GRADE POINTS SHOWN ON THE TYPICAL SECTIONS.

SHOULDER CONSTRUCTION:

ASPHALT AND EARTH SHOULDER CONSTRUCTION ON THE HIGH SIDE OF SUPERELEVATED CURVES SHALL BE IN ACCORDANCE WITH STD. NO. 560.01.

GUARDRAIL:

THE GUARDRAIL LOCATIONS SHOWN ON THE PLANS MAY BE ADJUSTED DURING CONSTRUCTION AS DIRECTED BY THE ENGINEER. THE CONTRACTOR SHOULD CONSULT WITH THE ENGINEER PRIOR TO ORDERING GUARDRAIL MATERIAL.

SUBSURFACE PLANS:

NO SUBSURFACE PLANS ARE AVAILABLE ON THIS PROJECT. THE CONTRACTOR SHOULD MAKE HIS OWN INVESTIGATION AS TO THE SUBSURFACE CONDITIONS.

END BENTS:

THE ENGINEER SHALL CHECK THE STRUCTURE END BENT PLANS, DETAILS, AND CROSS-SECTION PRIOR TO SETTING OF THE SLOPE STAKES FOR THE EMBANKMENT OR EXCAVATION APPROACHING A BRIDGE.

UTILITIES:

ANY RELOCATION OF EXISTING UTILITIES WILL BE ACCOMPLISHED BY OTHERS.

RIGHT-OF-WAY MARKERS:

ALL RIGHT-OF-WAY MARKERS ON THIS PROJECT SHALL BE PLACED BY CONTRACT.

APPROXIMATE GUARDRAIL LENGTH

STATION	LOCATION	STATION	LOCATION	LENGTH
-L- 9+80.77 +/-	RT	-L- 12+68.27 +/-	RT	287.5′
-L- 11+30.77 +/-	LT	-L- 12+68.27 +/-	LT	137.5′
-L- 14+22.56 +/-	RT	-L- 15+74.22 +/-	RT	151.66′
-L- 14+22.56 +/-	LT	-Y- 11+12.00 +/-	LT	165.5′
-Y- 11+12.00 +/-	RT	-L- 15+74.22 +/-	LT	91.8′
-L- 16+96.56 +/-	RT	-L- 18+34.06 +/-	RT	137.5′
-L- 16+96.56 +/-	LT	-L- 19+84.06 +/-	LT	287.5′
		SUBTOTAL		1258.96′
		ANCHOR DEDUCTIONS		450′
		TOTAL		808.96′
		SAY		812.5′

ANCHOR DEDUCTIONS

GRAU-350	6 X 50′	300′
TYPE III	4 X 18.75′	75′
TYPE B-77	4 X 18.75′	75′
TOTAL ANCHOR DEDUCTIONS		450′

EFF. 01-15-02
REV.11-23-04

ROADWAY ENGLISH STANDARD DRAWINGS

The following Roadway Standards as appear in "Roadway Standard Drawings" Highway Design Branch - N. C. Department of Transportation - Raleigh, N. C., Dated January 15, 2002 are applicable to this project and by reference hereby are considered a part of these plans:

STD.NO.	TITLE
DIVISION 2 - EARTHWORK	
200.02	Method of Clearing - Method II
225.02	Guide for Grading Subgrade - Secondary and Local
225.04	Method of Obtaining Superelevation - Two Lane Pavement
DIVISION 3 - PIPE CULVERTS	
300.01	Method of Pipe Installation - Method 'A'
DIVISION 4 - MAJOR STRUCTURES	
422.10	Reinforced Bridge Approach Fills
DIVISION 5 - SUBGRADE, BASES AND SHOULDERS	
560.01	Method of Shoulder Construction - High Side of Superelevated Curve - Method I
DIVISION 8 - INCIDENTALS	
806.01	Concrete Right-of-Way Marker
806.02	Granite Right-of-Way Marker
820.04	Drain Installation in Shoulder Berm Gutter
840.25	Anchorage for Frames - Brick or Concrete
840.29	Frames and Narrow Slot Flat Grates
840.35	Traffic Bearing Drop Inlet - for Cast Iron Double Frame and Grates
840.46	Traffic Bearing Precast Drainage Structure
840.66	Drainage Structure Steps
846.01	Concrete Curb, Gutter and Curb & Gutter
862.01	Guardrail Placement
876.02	Guide for Rip Rap at Pipe Outlets

bphillips
r:\roadway\proj\ma050017b_ma050018b_rdy_sheet1a.dgn
12/7/2006 8:24:46 AM

FRANKLIN COUNTY (BRIDGE #41 & 42) MA 05017B–18B

PROJECT REFERENCE	SHEET NO.
37661	3

ROADWAY DESIGN ENGINEER

NORTH CAROLINA PROFESSIONAL SEAL 27391 ENGINEER MICHAEL PEKAREK

12/07/06

Prepared in the Office of: GIBSON ENGINEERS, PC

DESIGN DATA

ADT 2004 = 800
ADT 2025 = 1450

V = 60 MPH

*DESIGN EXCEPTION: FOR
VERTICAL K VALUE
HORIZ. STOPPING SIGHT DISTANCE
BRIDGE WIDTH

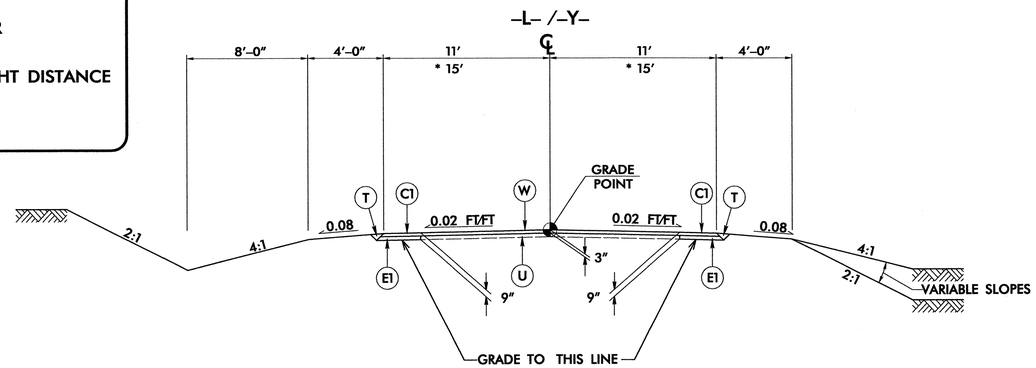

TYPICAL SECTION NO. 1

USE TYPICAL SECTION NO. 1:

–L– STA 10+00 TO 12+79.27 (BEG. BRIDGE #42)
–L– STA 14+11.56 (END BRIDGE #42) TO 15+74.22 (BEG. BRIDGE #41)
–L– STA 16+96.56 (END BRIDGE #41) TO 19+50
*–Y– STA 10+11.08 TO 11+75

NOTE: FOR VARIABLE SLOPES SEE CROSS SECTIONS.
SEE PLANS FOR TAPERS.

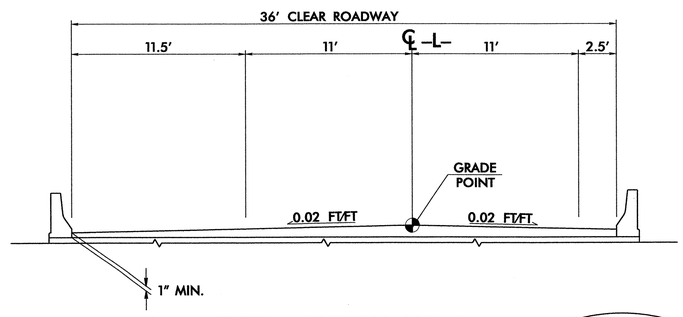

TYPICAL SECTION NO. 2

USE TYPICAL SECTION NO. 2:

–L– STA 12+79.27 (BEG. BRIDGE #42) TO 14+11.56 (END BRIDGE #42)
–L– STA 15+74.22 (BEG. BRIDGE #41) TO 16+96.56 (END BRIDGE #41)

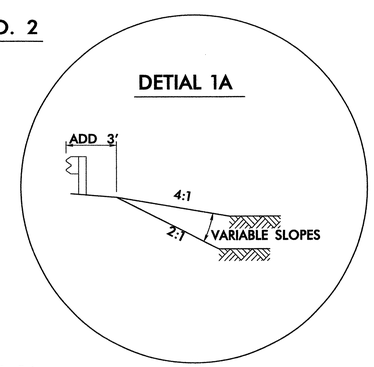

DETIAL 1A

USE AT GUARDRAIL LOCATIONS FROM FACE OF PROPOSED GUARDRIAL

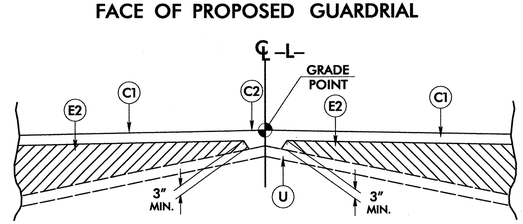

Detail Showing Method of Wedging

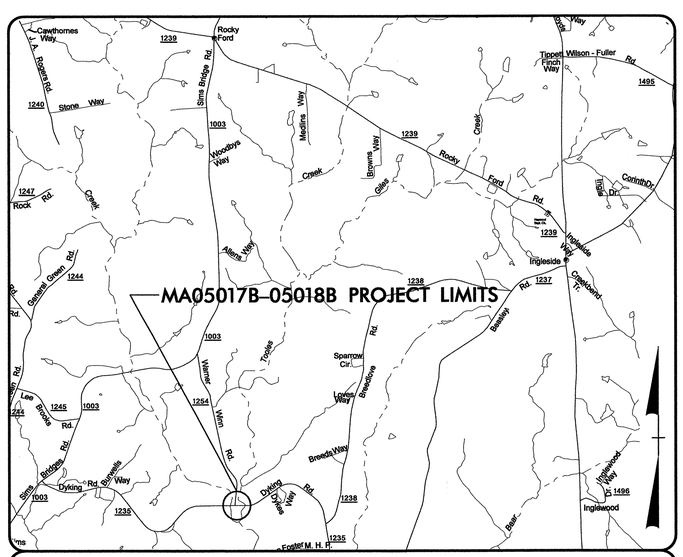

VICINITY MAP

PAVEMENT SCHEDULE	
C1	PROP. APPROX. 3" ASPHALT CONCRETE SURFACE COURSE, TYPE S9.5B, AT AN AVERAGE RATE OF 168 LBS. PER SQ. YD. IN EACH OF 2 LAYERS.
C2	PROP. VAR. DEPTH ASPHALT CONCRETE SURFACE COURSE, TYPE S9.5B, AT AN AVERAGE RATE OF 112 LBS. PER SQ. YD. PER 1" DEPTH. TO BE PLACED IN LAYERS NOT TO EXCEED 1½" IN DEPTH.
E1	PROP. APPROX. 6" ASPHALT CONCRETE BASE COURSE, TYPE B25.0B, AT AN AVERAGE RATE OF 342 LBS. PER SQ. YD. IN EACH OF 2 LAYERS.
E2	PROP. VAR. DEPTH ASPHALT CONCRETE BASE COURSE, TYPE B25.0, AT AN AVERAGE RATE OF 114 LBS. PER SQ. YD. PER 1" DEPTH. TO BE PLACED IN LAYERS NOT LESS THAN 3" IN DEPTH OR GREATER THAN 5½" IN DEPTH.
T	EARTH MATERIAL.
U	EXISTING PAVEMENT.
W	WEDGING (SEE DETAIL SHOWING METHOD OF WEDGING)

NOTE: PAVEMENT EDGE SLOPES ARE 1:1 UNLESS SHOWN OTHERWISE.

bphillips
r:\roadway\proj\ma05017b_rdy_typ.dgn
12/7/2006 8:24:47 AM

PROJECT REFERENCE NO.	SHEET NO.
37661	4

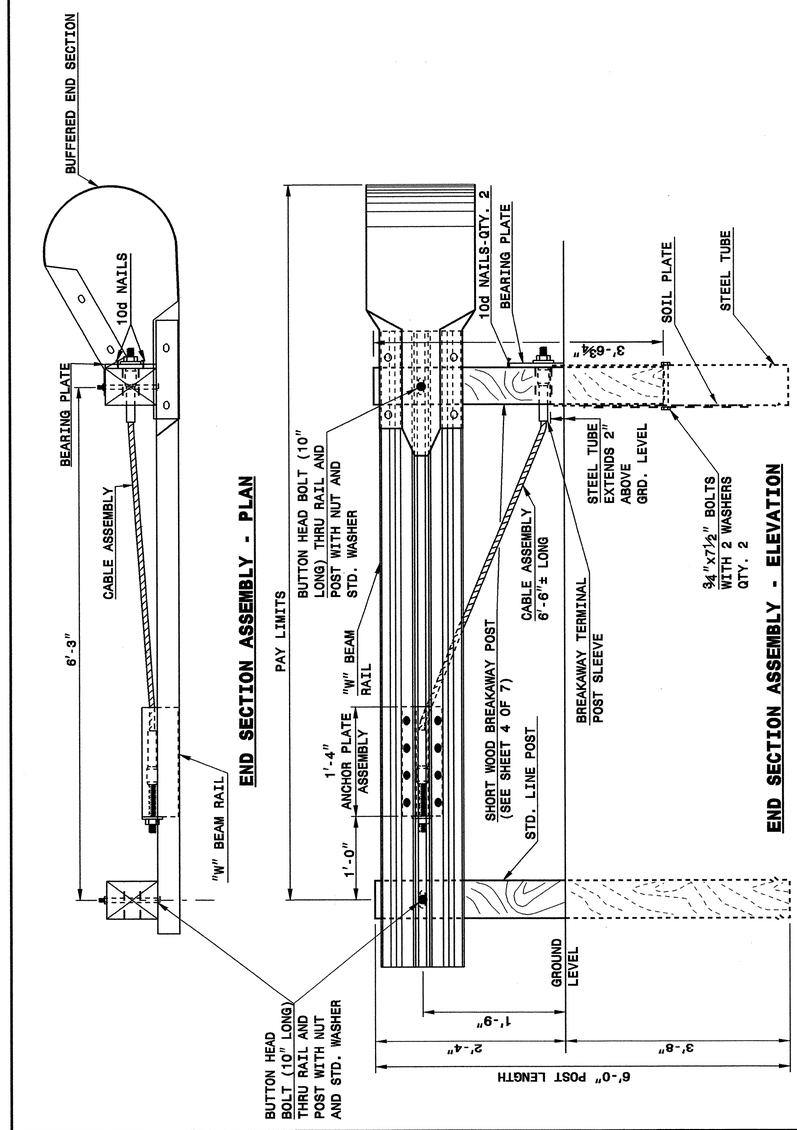

STATE OF NORTH CAROLINA DEPT. OF TRANSPORTATION DIVISION OF HIGHWAYS RALEIGH, N.C.

ENGLISH DETAIL DRAWING FOR **GUARDRAIL INSTALLATION**

SHEET 1 OF 7 **862D02**

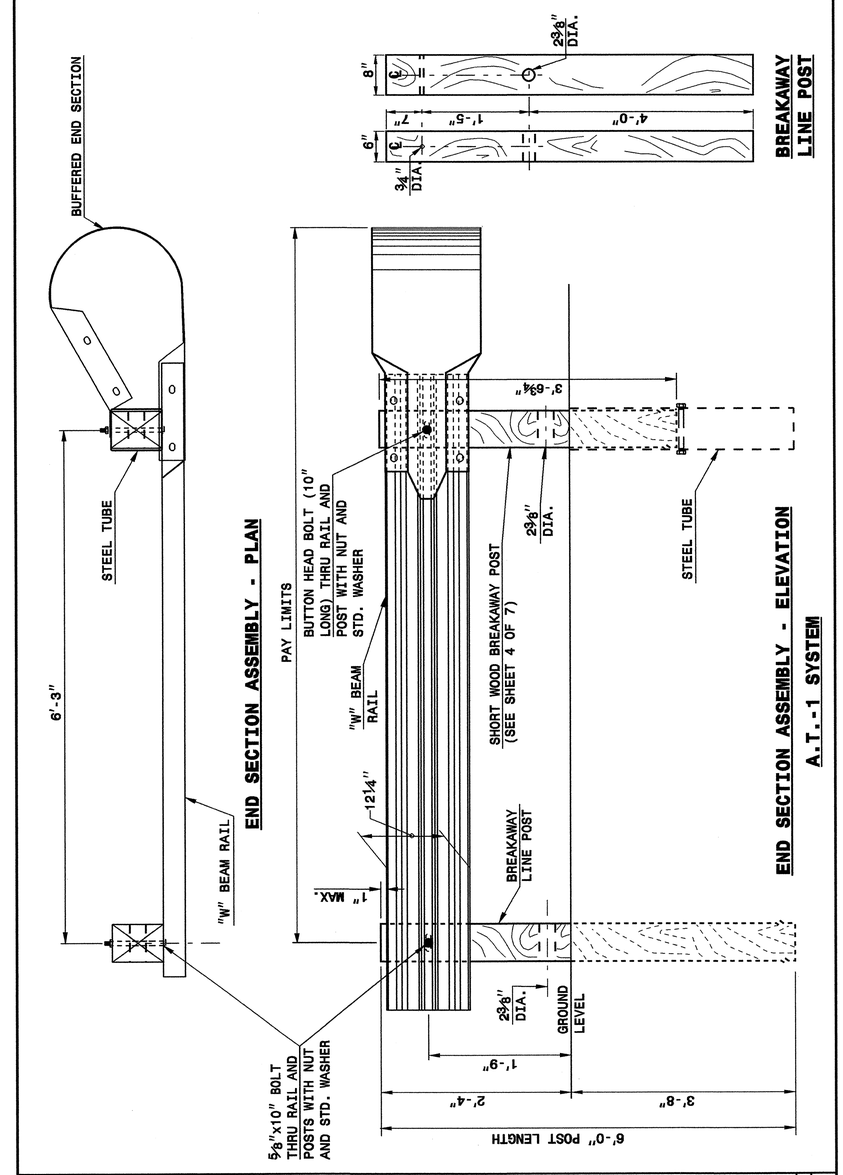

STATE OF NORTH CAROLINA DEPT. OF TRANSPORTATION DIVISION OF HIGHWAYS RALEIGH, N.C.

ENGLISH DETAIL DRAWING FOR **GUARDRAIL INSTALLATION**

SHEET 2 OF 7 **862D02**

STATE OF NORTH CAROLINA DEPT. OF TRANSPORTATION DIVISION OF HIGHWAYS RALEIGH, N.C.

ENGLISH DETAIL DRAWING FOR **GUARDRAIL INSTALLATION**

SHEET 1 OF 7 **862D02**

STATE OF NORTH CAROLINA DEPT. OF TRANSPORTATION DIVISION OF HIGHWAYS RALEIGH, N.C.

ENGLISH DETAIL DRAWING FOR **GUARDRAIL INSTALLATION**

SHEET 2 OF 7 **862D02**

PROJECT SERVICES UNIT
STANDARDS AND SPECIAL DESIGN
Office 919-250-4128 FAX 919-250-4119

SEE PLATE FOR TITLE

ORIGINAL BY: 2002 STD.862.02 DATE:
MODIFIED BY: E.E. WARD DATE: 02-09-03
CHECKED BY: DATE:
FILE SPEC.: /usr/stds/02todetail/english/86202/862d02.dgn

25-OCT-2004 13:27
W:\Special Details\eaward\stds\02 Stds to Special Details\english\86202\0862d02.dgn
eaward AT USZ2268

STATE OF NORTH CAROLINA
DEPT. OF TRANSPORTATION
DIVISION OF HIGHWAYS
RALEIGH, N.C.

ENGLISH DETAIL DRAWING FOR
GUARDRAIL INSTALLATION

SHEET 3 OF 7
862D02

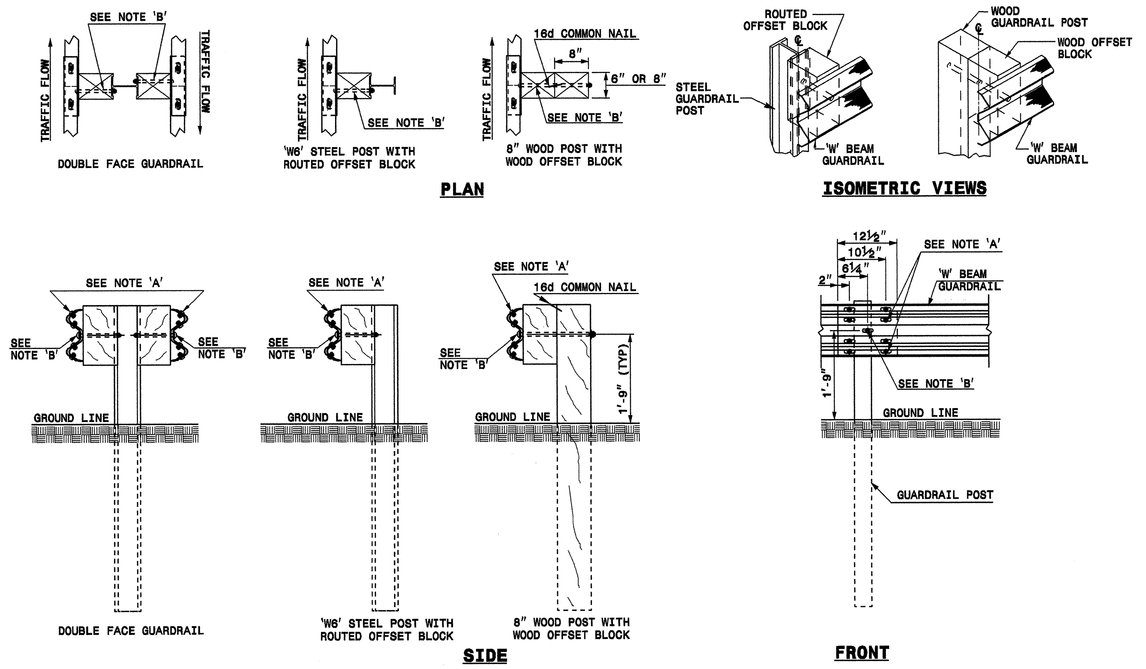

NOTES:
A - ⅝" DIA. BUTTON HEAD SPLICE BOLT 1¼" LONG (8 REQ. PER SPLICE JOINT).
B - ⅝" DIA. BUTTON HEAD BOLT 7½"/9" LONG WITH NUT FOR BOLTING 6"/8" ROUTED OFFSET BLOCK TO STEEL POSTS OR
⅝" DIA. BUTTON HEAD BOLT 18" LONG WITH STD. WASHER UNDER NUT FOR BOLTING TO WOOD POSTS (1 REQ. PER LOCATION)
C - FIELD PUNCHING OF HOLES INTO GUARDRAIL SHALL BE AS DIRECTED BY THE ENGINEER.

TYPICAL GUARDRAIL AND GUARDRAIL POST ALTERNATIVES

STATE OF NORTH CAROLINA
DEPT. OF TRANSPORTATION
DIVISION OF HIGHWAYS
RALEIGH, N.C.

ENGLISH DETAIL DRAWING FOR
GUARDRAIL INSTALLATION

SHEET 3 OF 7
862D02

STATE OF NORTH CAROLINA
DEPT. OF TRANSPORTATION
DIVISION OF HIGHWAYS
RALEIGH, N.C.

ENGLISH DETAIL DRAWING FOR
GUARDRAIL INSTALLATION

SHEET 4 OF 7
862D02

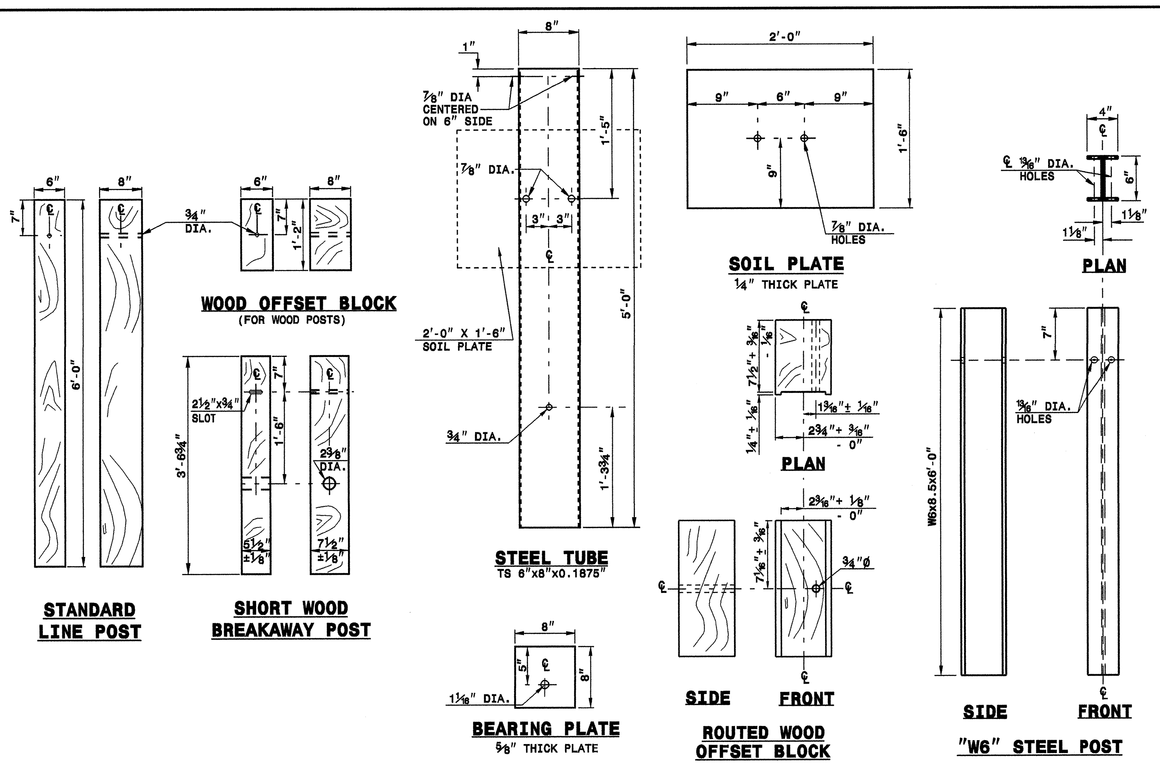

SYSTEM PARTS

STATE OF NORTH CAROLINA
DEPT. OF TRANSPORTATION
DIVISION OF HIGHWAYS
RALEIGH, N.C.

ENGLISH DETAIL DRAWING FOR
GUARDRAIL INSTALLATION

SHEET 4 OF 7
862D02

PROJECT SERVICES UNIT
STANDARDS AND SPECIAL DESIGN
Office 919-250-4128 FAX 919-250-4119

SEE PLATE FOR TITLE

ORIGINAL BY: 2002 STD. 862.02 DATE:
MODIFIED BY: E.E. WARD DATE: 02-09-03
CHECKED BY: DATE:
FILE SPEC.: /usr/stds/02stdrail/english/86202/0862d02.dgn

PROJECT REFERENCE NO. 37661
SHEET NO. 5

25-OCT-2004 13:55
W:\Special Details\erisward\stds\02' Stds to Special Details\english\86202\0862d02.dgn
.erisward AT DS212260

STATE OF NORTH CAROLINA
DEPT. OF TRANSPORTATION
DIVISION OF HIGHWAYS
RALEIGH, N.C.

ENGLISH DETAIL DRAWING FOR
GUARDRAIL INSTALLATION

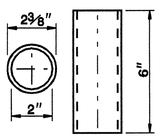

BREAKAWAY TERMINAL POST SLEEVE

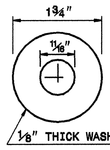

DETAIL OF STANDARD WASHER

STANDARD WASHER: TYPICAL USE UNDER NUT WITH WOOD POST

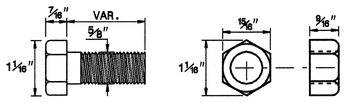

DETAIL OF STANDARD HEX BOLT AND NUT

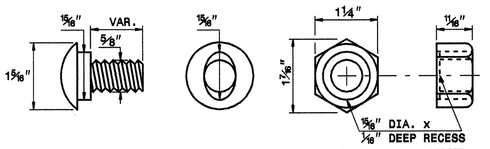

DETAIL OF BUTTON HEAD BOLT AND NUT

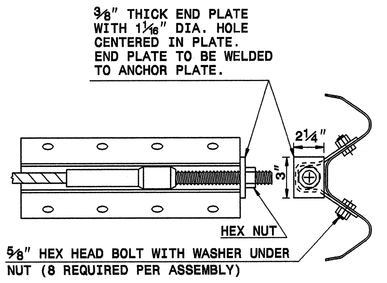

ANCHOR PLATE ASSEMBLY

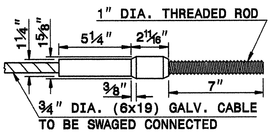

SWAGED CABLE

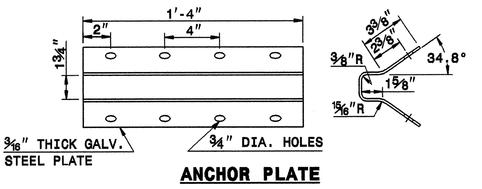

ANCHOR PLATE

CABLE ASSEMBLY

SHEET 5 OF 7
862D02

SYSTEM PARTS

STATE OF NORTH CAROLINA
DEPT. OF TRANSPORTATION
DIVISION OF HIGHWAYS
RALEIGH, N.C.

ENGLISH DETAIL DRAWING FOR
GUARDRAIL INSTALLATION

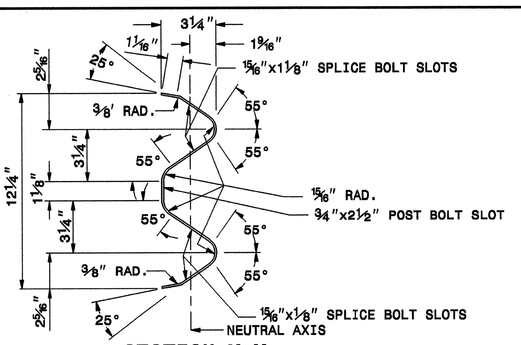

SECTION X-X

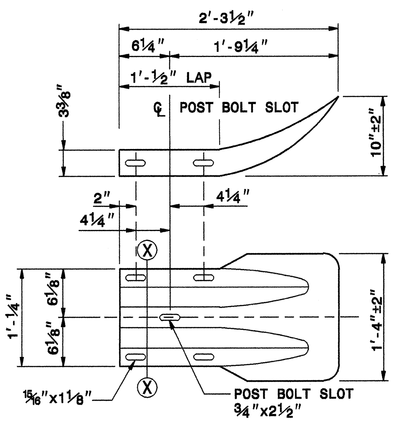

TERMINAL END SECTION

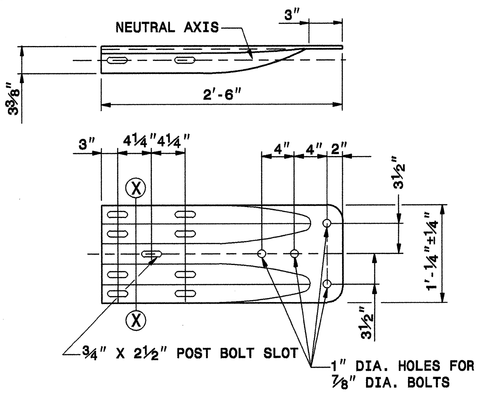

TYPICAL END SHOE

SYSTEM PARTS - GENERAL USE

SHEET 6 OF 7
862D02

PROJECT SERVICES UNIT
STANDARDS AND SPECIAL DESIGN
Office 919-250-4128 FAX 919-250-4119

SEE PLATE FOR TITLE

ORIGINAL BY: 2002 STD. 862.02 DATE: 02-09-03
MODIFIED BY: E.E. WARD DATE:
CHECKED BY: DATE:
FILE SPEC.: /usr/stds/02rdrail/english/86202/862d02.dgn

PROJECT REFERENCE NO. 37861
SHEET NO. 6

PROJECT REFERENCE NO.	SHEET NO.
37661	7

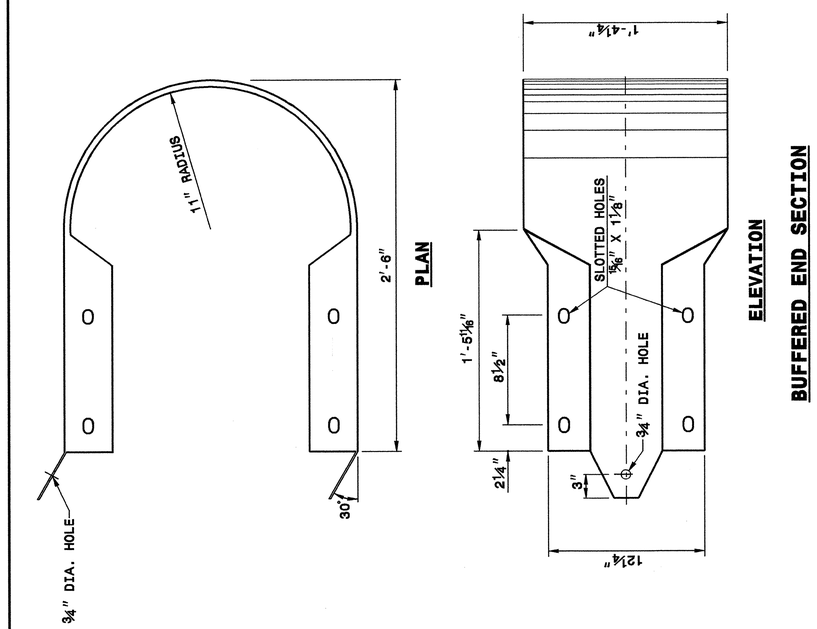

STATE OF NORTH CAROLINA DEPT. OF TRANSPORTATION DIVISION OF HIGHWAYS RALEIGH, N.C.	ENGLISH DETAIL DRAWING FOR **GUARDRAIL INSTALLATION**	SHEET 7 OF 7 **862D02**

STATE OF NORTH CAROLINA DEPT. OF TRANSPORTATION DIVISION OF HIGHWAYS RALEIGH, N.C.

ENGLISH DETAIL DRAWING FOR **GUARDRAIL INSTALLATION**

SHEET 7 OF 7 862D02

25-OCT-2004 13:55
W:\Special Details\guardrail\stds\02 Stds to Special Details\english\86202\0862d02.dgn
erickward AT DS212260

PROJECT SERVICES UNIT
STANDARDS AND SPECIAL DESIGN
Office 919-250-4128 FAX 919-250-4119

SEE PLATE FOR TITLE

ORIGINAL BY: 2002 STD.862.02 DATE:
MODIFIED BY: E.E. WARD DATE: 02-09-03
CHECKED BY: DATE:
FILE SPEC.: /usr/stds/02todetail/english/86202/862d02.dgn

STATE OF NORTH CAROLINA
DEPT. OF TRANSPORTATION
DIVISION OF HIGHWAYS
RALEIGH, N.C.

ENGLISH DETAIL DRAWING FOR
STRUCTURE ANCHOR UNITS
ANCHORAGE FOR GUARDRAIL POST ON BOX CULVERT

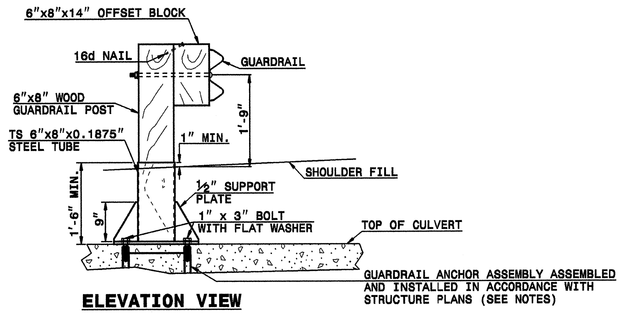

ELEVATION VIEW

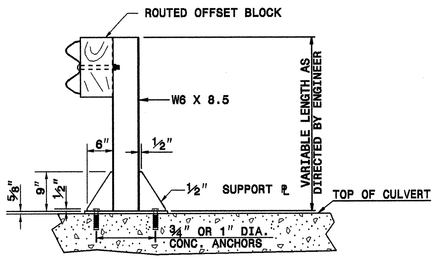

ELEVATION VIEW

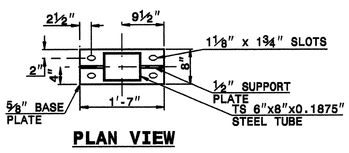

PLAN VIEW

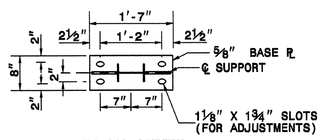

PLAN VIEW

NOTES FOR:
GUARDRAIL POST ANCHORED TO STRUCTURE:
- -USE FULL LENGTH ¼" BUTT WELDS AT ALL LOCATIONS OF CONTACT BETWEEN THE BASE PLATE, SUPPORT PLATES AND STEEL POST OR STEEL TUBE.
- -USE POST AND POST BASE PLATES CONFORMING TO THE REQUIREMENTS OF A.S.T.M. A-36 AND GALVANIZED AFTER FABRICATION TO CONFORM TO A.S.T.M. A-123.
- -USE WOOD POSTS WHICH FIT SNUGLY IN THE STEEL TUBE WITH A MAXIMUM OF ⅛" CLEARANCE BETWEEN TUBE WALL AND POST.

NEW STRUCTURES:
- -ATTACH POST TO INSERT ASSEMBLY UNITS (USING ANCHOR BOLTS SUPPLIED WITH INSERTS) WHICH HAVE BEEN CAST INTO THE STRUCTURE DURING CONSTRUCTION.

EXISTING STRUCTURES:
- -USE CONCRETE ANCHORS CONSISTING OF A STUD BOLT WITH NUT AND WASHER. USE STUDS THREADED ON ONE END AND HAVING AN EXPANDED WEDGE ASSEMBLY POSITIONED AROUND A TAPERED AREA AT THE OTHER END. USE ANCHORS WHICH PROVIDE A MINIMUM SAFE HOLDING POWER OF 2875 LBS. FOR A ¾" OR 1" DIAMETER BOLT. CALCULATE HOLDING POWER BASED ON ¼ THE ACTUAL HOLDING POWER OF THE ANCHOR IN 3500 PSI CONCRETE AS DETERMINED BY AN APPROVED COMMERCIAL TESTING LABORATORY.

- -USE ANCHORS GALVANIZED IN ACCORDANCE WITH A.S.T.M. A-153. SIZE HOLES FOR THE CONCRETE ANCHORS IN ACCORDANCE WITH THE ANCHOR MANUFACTURER'S RECOMMENDATIONS. DRILL HOLES WITH A CARBIDE OR DIAMOND TIPPED MASONRY BIT POWERED BY A ROTARY OR ROTARY IMPACT DRILL. NO OTHER IMPACT TOOLS WILL BE PERMITTED. DRILL HOLES VERTICALLY. FURNISH DOCUMENTATION OF HOLE SIZE RECOMMENDED FOR THE SPECIFIED ANCHOR TO THE ENGINEER BEFORE DRILLING HOLES. THOROUGHLY CLEAN HOLES FOR ANCHORS OF ALL CONCRETE CHIPS, DUST, GREASE, OIL, ETC. BEFORE ANCHORS ARE INSTALLED. REPAIR ALL DAMAGE CAUSED BY THIS WORK TO THE SATISFACTION OF THE ENGINEER.

ANCHORAGE FOR GUARDRAIL POST ON BOX CULVERT

SHEET 1 OF 4
862D03

STATE OF NORTH CAROLINA
DEPT. OF TRANSPORTATION
DIVISION OF HIGHWAYS
RALEIGH, N.C.

ENGLISH DETAIL DRAWING FOR
STRUCTURE ANCHOR UNITS
ANCHORAGE FOR GUARDRAIL POST ON BOX CULVERT

SHEET 1 OF 4
862D03

STATE OF NORTH CAROLINA
DEPT. OF TRANSPORTATION
DIVISION OF HIGHWAYS
RALEIGH, N.C.

ENGLISH DETAIL DRAWING FOR
STRUCTURE ANCHOR UNITS
GUARDRAIL ANCHOR UNIT, TYPE III
FOR ATTACHMENT TO RAIL ON BRIDGE

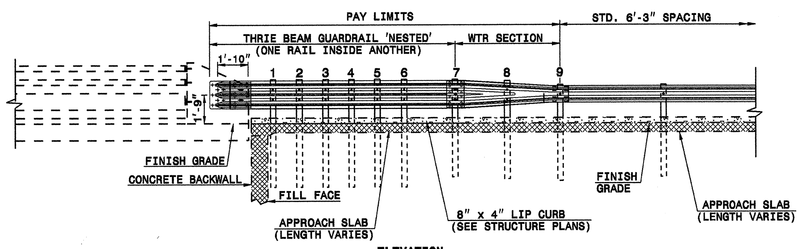

ELEVATION

NOTE:
- **POST NOT REQUIRED FOR SKEW ANGLES GREATER THAN 150° OR LESS THAN 30° UNLESS OTHERWISE DIRECTED BY THE ENGINEER.
- *THE DISTANCE FROM END OF BRIDGE RAIL TO CENTER LINE OF THE FIRST POST SHOULD BE 11½" IF CONCRETE BACKWALL IS NOT PRESENT.
- -SHOULDER BERM GUTTER MUST BE INSTALLED WITHIN THE PAY LIMITS IF THE ANCHOR UNIT IS NOT ADJACENT TO AN APPROACH SLAB.
- -MEASURE GUARDRAIL HEIGHT FROM THE TOP OF ADJACENT SURFACE (SHOULDER, BERM, OR GUTTER).
- -USE NO STEEL POSTS WITHIN THE GUARDRAIL ANCHOR UNIT LIMITS.
- -LAP JOINTS IN THE DIRECTION OF TRAFFIC FLOW.
- -SEE SHEET 4 FOR POST SECTIONS 1 THRU 9.

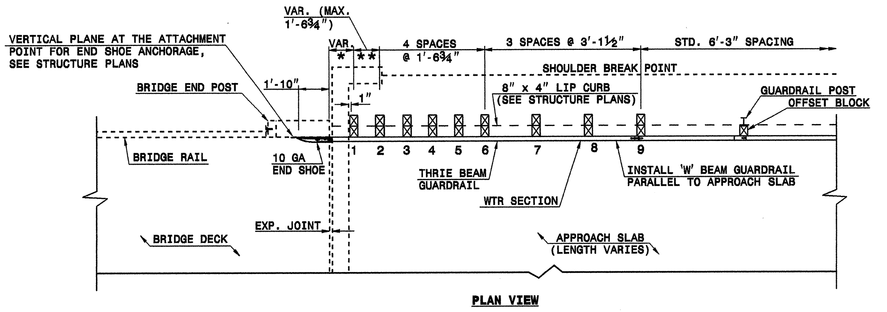

PLAN VIEW

GUARDRAIL ANCHOR UNIT, TYPE III FOR ATTACHMENT TO RAIL ON BRIDGE

SHEET 2 OF 4
862D03

STATE OF NORTH CAROLINA
DEPT. OF TRANSPORTATION
DIVISION OF HIGHWAYS
RALEIGH, N.C.

ENGLISH DETAIL DRAWING FOR
STRUCTURE ANCHOR UNITS
GUARDRAIL ANCHOR UNIT, TYPE III
FOR ATTACHMENT TO RAIL ON BRIDGE

SHEET 2 OF 4
862D03

PROJECT SERVICES UNIT
STANDARDS AND SPECIAL DESIGN
Office 919-250-4128 FAX 919-250-4119

SEE PLATE FOR TITLE

ORIGINAL BY: 2002 STANDARDS DATE: 01-15-02
MODIFIED BY: E.E. WARD DATE: 03-03-05
CHECKED BY: DATE:
FILE SPEC.: stds/02stdstcodetails/english/862d03.dgn

PROJECT REFERENCE NO. 37861
SHEET NO. 8

03-MAR-2005 13:49
W:\Special Details\ericward\stds\02' Stds to Special Details\english\86203\0862d03.dgn
ericward AT PSU222293

STATE OF NORTH CAROLINA
DEPT. OF TRANSPORTATION
DIVISION OF HIGHWAYS
RALEIGH, N.C.

ENGLISH DETAIL DRAWING FOR
STRUCTURE ANCHOR UNITS
GUARDRAIL ANCHOR UNIT, TYPE III
FOR ATTACHMENT TO RAIL ON APPROACH SLAB

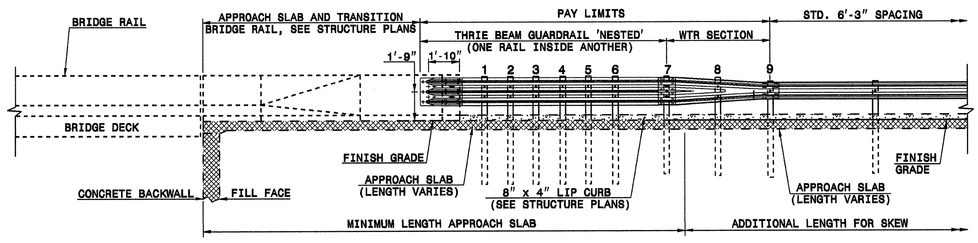

ELEVATION

NOTE:
- -MEASURE GUARDRAIL HEIGHT FROM THE TOP OF ADJACENT SURFACE (SHOULDER, BERM, OR GUTTER).
- -USE NO STEEL POSTS WITHIN THE GUARDRAIL ANCHOR UNIT LIMITS.
- -LAP JOINTS IN THE DIRECTION OF TRAFFIC FLOW.
- -SEE SHEET 4 FOR POST SECTIONS 1 THRU 9.

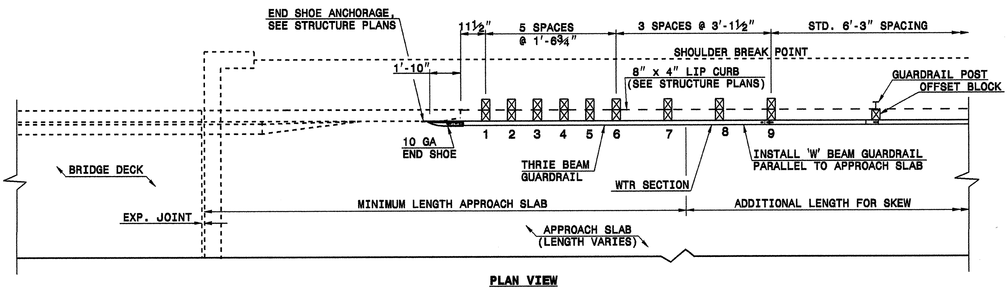

PLAN VIEW

GUARDRAIL ANCHOR UNIT, TYPE III
FOR ATTACHMENT TO RAIL ON APPROACH SLAB

SHEET 3 OF 4
862D03

STATE OF NORTH CAROLINA
DEPT. OF TRANSPORTATION
DIVISION OF HIGHWAYS
RALEIGH, N.C.

ENGLISH DETAIL DRAWING FOR
STRUCTURE ANCHOR UNITS
GUARDRAIL ANCHOR UNIT, TYPE III
FOR ATTACHMENT TO RAIL ON APPROACH SLAB

SHEET 3 OF 4
862D03

STATE OF NORTH CAROLINA
DEPT. OF TRANSPORTATION
DIVISION OF HIGHWAYS
RALEIGH, N.C.

ENGLISH DETAIL DRAWING FOR
STRUCTURE ANCHOR UNITS
GUARDRAIL ANCHOR UNIT, TYPE III

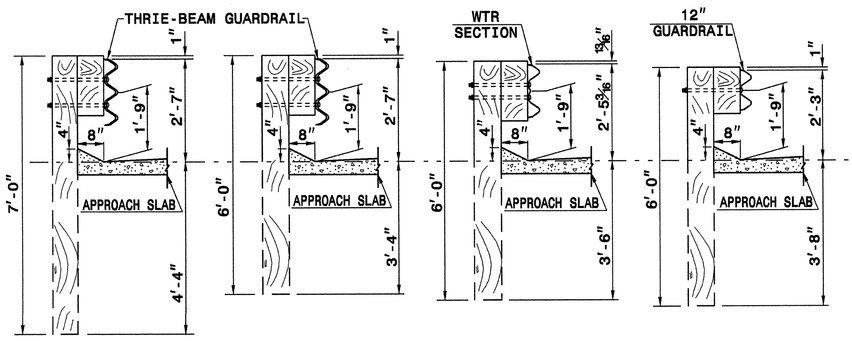

SECTION OF THRIE BEAM POSTS 1 THRU 6

SECTION OF THRIE BEAM POST 7

SECTION OF WTR BEAM POST 8

SECTION OF 'W' BEAM POST 9

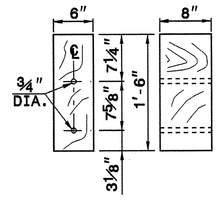

THRIE BEAM OFFSET BLOCK

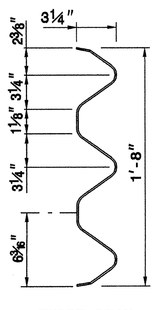

THRIE-BEAM SECTION

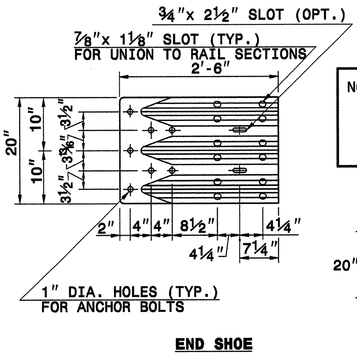

END SHOE

NOTE: THE MID POST AND OFFSET BLOCK OF THE WTR SECTION WILL REQUIRE SPECIAL BOLT HOLE DRILLING IN THE THRIE BEAM OFFSET BLOCK AND LINE POST.

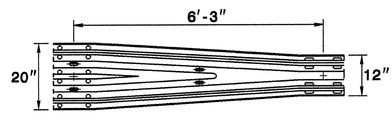

WTR SECTION
ELEVATION VIEW

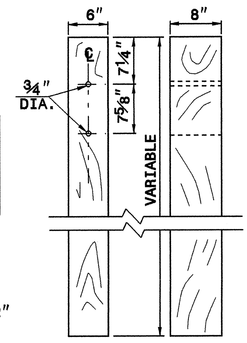

THRIE BEAM LINE POST

SHEET 4 OF 4
862D03

STATE OF NORTH CAROLINA
DEPT. OF TRANSPORTATION
DIVISION OF HIGHWAYS
RALEIGH, N.C.

ENGLISH DETAIL DRAWING FOR
STRUCTURE ANCHOR UNITS
GUARDRAIL ANCHOR UNIT, TYPE III

SHEET 4 OF 4
862D03

PROJECT SERVICES UNIT
STANDARDS AND SPECIAL DESIGN
Office 919-250-4128 FAX 919-250-4119

SEE PLATE FOR TITLE

ORIGINAL BY: 2002 STANDARDS DATE: 01-15-02
MODIFIED BY: E.E. WARD DATE: 03-03-05
CHECKED BY: DATE:
FILE SPEC.: stds/02stds/ordsals/english/862d03.dgn

PROJECT REFERENCE NO. 37861
SHEET NO. 9

20-JUN-2005 07:23
S:\Contracts\Contracts\Special Details\nbritt\english\guardrail\ma05017b sc guardrail.dgn
,nbritt AT

STATE OF NORTH CAROLINA
DEPT. OF TRANSPORTATION
DIVISION OF HIGHWAYS
RALEIGH, N.C.

ENGLISH DETAIL DRAWING FOR
GUARDRAIL ANCHOR UNIT TYPE B-77 SHOP CURVED

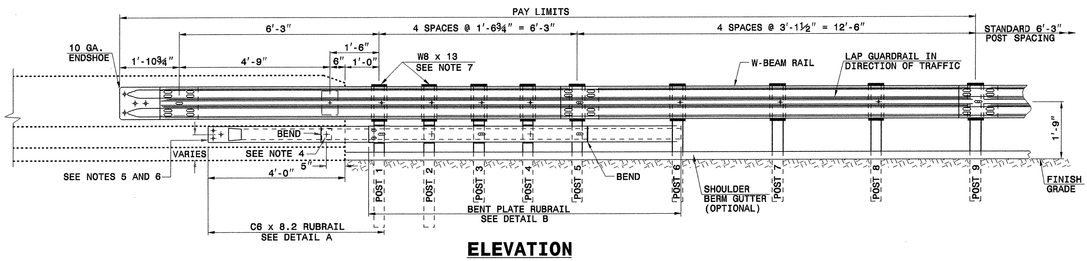

ELEVATION

GENERAL NOTES:
1) POSTS 1 THROUGH 5 REQUIRE AN ADDITIONAL HOLE TO ATTACH LOWER BLOCKOUTS AND/OR RUBRAIL.
2) RUBRAIL BLOCKOUTS LOCATED ON POSTS 1 THROUGH 4 ARE OFFSET DRILLED AND SECURED WITH ⅝" BUTTONHEAD BOLTS (SEE CHART FOR BOLT LENGTHS). SECURE BLOCKS ONLY TO POSTS 2 AND 4. SECURE RUBRAIL AND BLOCKOUTS TO POSTS 1 AND 3. RUBRAIL IS SECURED TO POST 5 WITH A ⅝" x 4½" BUTTONHEAD BOLT. RUBRAIL IS FLARED TO BACK OF POST 6 AND NOT SECURED.
3) STEEL SPACER TUBE IS A SCHEDULE 40 GALVANIZED PIPE 6" INSIDE DIAMETER x 9" LONG. ATTACH TUBE TO GUARDRAIL ONLY WITH ⅝" x 1¼" LONG BUTTONHEAD BOLT AND RECTANGULAR PLATE WASHER.
4) SEE DETAIL D FOR SLOPED RUBRAIL BLOCKOUT. BLOCKOUT IS ATTACHED TO RAIL ELEMENT ONLY. USE ⅜" x 3" LAG BOLT WITH FLAT WASHER.
5) SHOP FABRICATE THE C6 x 8.2 RUBRAIL END TO BE CONSISTENT WITH THE SLOPE OF THE JERSEY SHAPE AND ATTACH FLUSH WITH THE SLOPED TOE OF THE BARRIER OR BRIDGE RAIL.
6) ANCHORAGE:
   (a) AT EXISTING BRIDGE RAIL AND NEW OR EXISTING BARRIERS, RUBRAIL SHALL BE ANCHORED USING THREE ⅝" x 6" CHEMICALLY ANCHORED BOLTS WITH WASHERS. MAXIMUM PROJECTION FOR BOLTS SHALL BE ½".
   (b) AT EXISTING BRIDGE RAIL AND NEW OR EXISTING BARRIERS, THE W-BEAM END SHOE SHALL BE ANCHORED USING A 4 BOLT HOLD DOWN PLATE. A 4 BOLT INSERT ASSEMBLY IS ALLOWED ON PRECAST REINFORCED CONCRETE BARRIER (SEE 857D01). THE W-BEAM END SHOE SHALL BE INSTALLED BEHIND THE NESTED W-BEAM ELEMENTS.
   (c) AT NEW BRIDGE RAIL, THE W-BEAM END SHOE AND RUBRAIL SHALL BE ANCHORED AS DETAILED ON THE STRUCTURE PLANS.
7) POSTS 1 AND 2 ARE W8 x 13, 7'-6" LONG. ALL OTHER POSTS IN THE ANCHOR UNIT ARE W6 x 8.5.

SEE ROADWAY PLANS FOR END TREATMENT

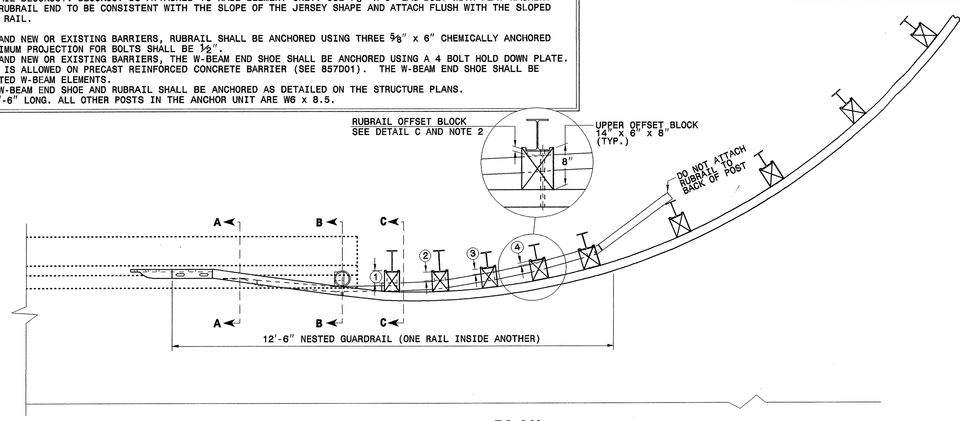

PLAN

GUARDRAIL ANCHOR UNIT TYPE B-77

SHEET 1 OF 2
B-77SC

STATE OF NORTH CAROLINA
DEPT. OF TRANSPORTATION
DIVISION OF HIGHWAYS
RALEIGH, N.C.

ENGLISH DETAIL DRAWING FOR
GUARDRAIL ANCHOR UNIT TYPE B-77 SHOP CURVED

SHEET 1 OF 2
B-41SC

STATE OF NORTH CAROLINA
DEPT. OF TRANSPORTATION
DIVISION OF HIGHWAYS
RALEIGH, N.C.

ENGLISH DETAIL DRAWING FOR
GUARDRAIL ANCHOR UNIT TYPE B-77 SHOP CURVED

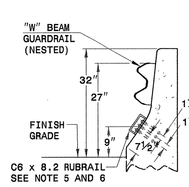

SECTION A-A

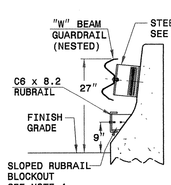

SECTION B-B

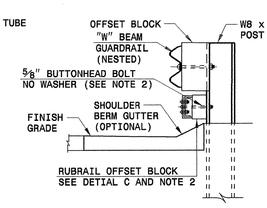

SECTION C-C

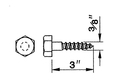

DETAIL E
LAG BOLT

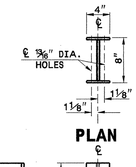

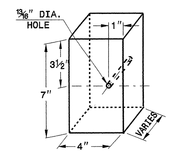

DETAIL C
RUBRAIL BLOCKOUT

RUBRAIL BLOCKS 7" HIGH x 4" WIDE		
POST	THICKNESS	BOLT LENGTH
①	4¼"	9"
②	3¼"	5" *
③	2"	6"
④	1"	3" *

* BOLTS FOR POSTS 2 AND 4 ARE USED TO ATTACH BLOCK TO POST. RUBRAIL NOT ATTACHED TO BLOCK.

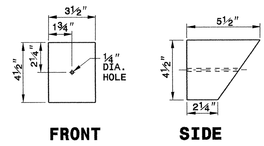

DETAIL D
SLOPED RUBRAIL BLOCKOUT

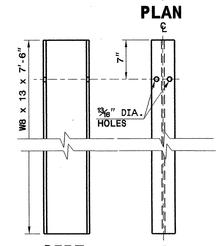

DETAIL F STEEL POST
"W8 X 13 X 7'-6"

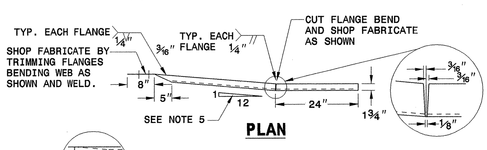

PLAN

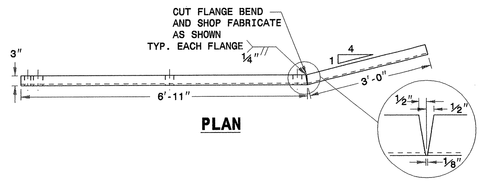

PLAN

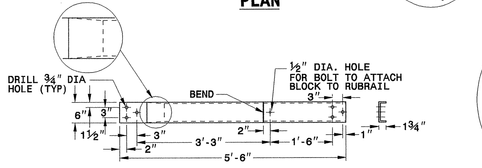

ELEVATION

DETAIL A
C6 x 8.2 RUBRAIL

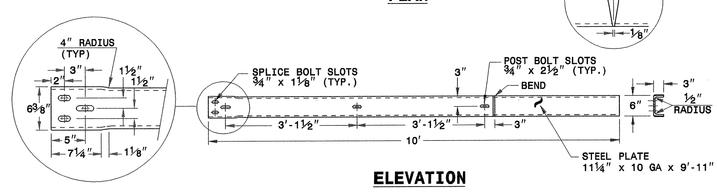

ELEVATION

DETAIL B
BENT PLATE RUBRAIL

GUARDRAIL ANCHOR UNIT TYPE B-77

SHEET 2 OF 2
B-77SC

STATE OF NORTH CAROLINA
DEPT. OF TRANSPORTATION
DIVISION OF HIGHWAYS
RALEIGH, N.C.

ENGLISH DETAIL DRAWING FOR
GUARDRAIL ANCHOR UNIT TYPE B-77 SHOP CURVED

SHEET 2 OF 2
B-41SC

PROJECT SERVICES UNIT
STANDARDS AND SPECIAL DESIGN
Office 919-250-4128 FAX 919-250-4119

SEE PLATE FOR TITLE

ORIGINAL BY: E.E. WARD DATE: 06-04-04
MODIFIED BY: nbritt DATE: 06-16-05
CHECKED BY: DATE:
FILE SPEC.: details/nbritt/guardrail/ma05017b B-77sguardrail.dgn

NORTH CAROLINA PROFESSIONAL SEAL 022996 ENGINEER
NORTH CAROLINA DEPARTMENT OF TRANSPORTATION
6/23/05

PROJECT REFERENCE NO. 37661
SHEET NO. 10

PROJECT REFERENCE NO.	SHEET NO.
37661	10A

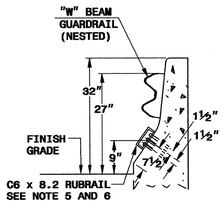

SECTION A-A

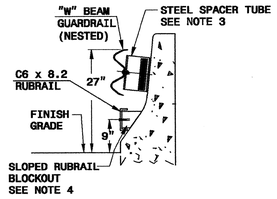

SECTION B-B

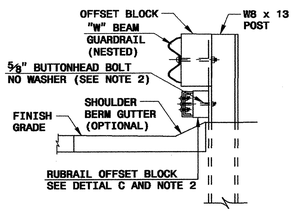

SECTION C-C

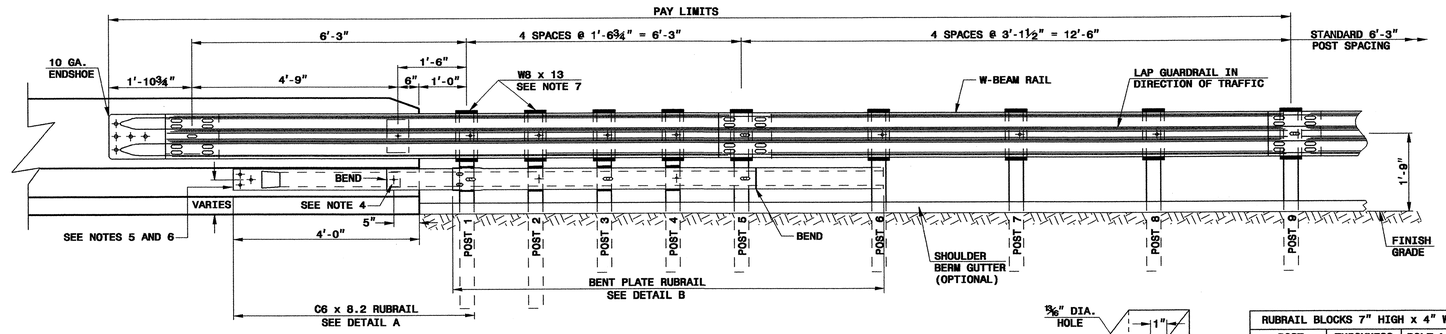

ELEVATION

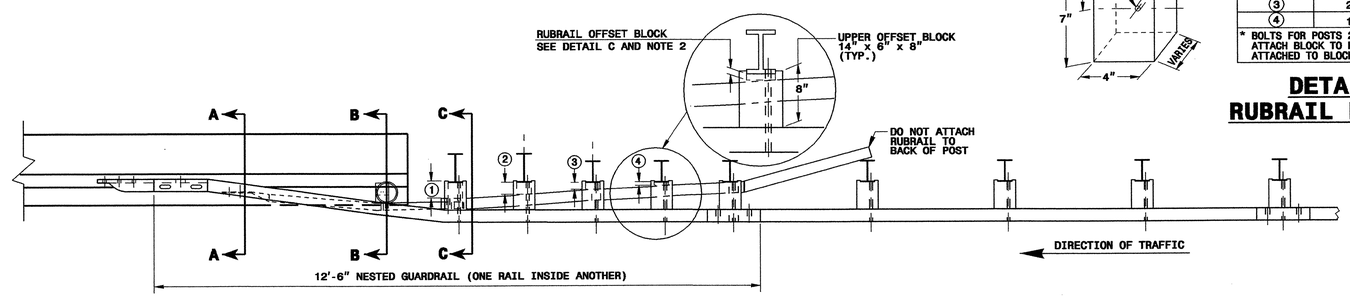

PLAN

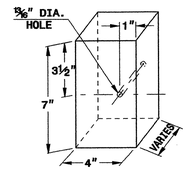

RUBRAIL BLOCKS 7" HIGH x 4" WIDE		
POST	THICKNESS	BOLT LENGTH
1	4¼"	9"
2	3¼"	5"*
3	2"	6"
4	1"	9"*

* BOLTS FOR POSTS 2 AND 4 ARE USED TO ATTACH BLOCK TO POST. RUBRAIL NOT ATTACHED TO BLOCK.

DETAIL C
RUBRAIL BLOCKOUT

GENERAL NOTES:

1) POSTS 1 THROUGH 5 REQUIRE AN ADDITIONAL HOLE TO ATTACH LOWER BLOCKOUTS AND/OR RUBRAIL.
2) RUBRAIL BLOCKOUTS LOCATED ON POSTS 1 THROUGH 4 ARE OFFSET DRILLED AND SECURED WITH ⅝" BUTTONHEAD BOLTS (SEE CHART FOR BOLT LENGTHS). SECURE BLOCKS ONLY TO POSTS 2 AND 4. SECURE RUBRAIL AND BLOCKOUTS TO POSTS 1 AND 3. RUBRAIL IS SECURED TO POST 5 WITH A ⅝" x 4½" BUTTONHEAD BOLT. RUBRAIL IS FLARED TO BACK OF POST 6 AND NOT SECURED.
3) STEEL SPACER TUBE IS A SCHEDULE 40 GALVANIZED PIPE 6" INSIDE DIAMETER x 9" LONG. ATTACH TUBE TO GUARDRAIL ONLY WITH ⅝" x 1¼" LONG BUTTONHEAD BOLT AND RECTANGULAR PLATE WASHER.
4) SEE DETAIL D FOR SLOPED RUBRAIL BLOCKOUT. BLOCKOUT IS ATTACHED TO RAIL ELEMENT ONLY. USE ⅜" x 3" LAG BOLT WITH FLAT WASHER.
5) SHOP FABRICATE THE C6x8.2 RUBRAIL END TO BE CONSISTENT WITH THE SLOPE OF THE JERSEY SHAPE AND ATTACH FLUSH WITH THE SLOPED TOE OF THE BARRIER OR BRIDGE RAIL.
6) ANCHORAGE:
   (a) AT EXISTING BRIDGE RAIL AND NEW OR EXISTING BARRIERS, RUBRAIL SHALL BE ANCHORED USING THREE ⅝" x 6" CHEMICALLY ANCHORED BOLTS WITH WASHERS.
   (b) AT EXISTING BRIDGE RAIL AND NEW OR EXISTING BARRIERS, THE W-BEAM END SHOE SHALL BE ANCHORED USING A 4 BOLT HOLD-DOWN PLATE AS SHOWN ON DETAIL 857D01 SHEET 6. A 4 BOLT INSERT ASSEMBLY IS ALLOWED ON PRECAST REINFORCED CONCRETE BARRIER (857D01). THE W-BEAM END SHOE SHALL BE INSTALLED BEHIND THE NESTED W-BEAM ELEMENTS.
   (c) AT NEW BRIDGE RAIL, THE W-BEAM END SHOE AND RUBRAIL SHALL BE ANCHORED AS DETAILED ON THE STRUCTURE PLANS.
7) POSTS 1 AND 2 ARE W8 x 13, 7'-6" LONG. ALL OTHER POSTS IN THE ANCHOR UNIT ARE W8 x 8.5.

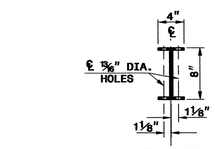

PLAN

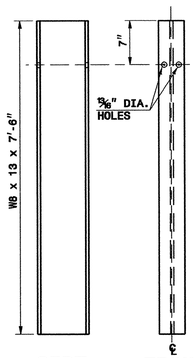

SIDE FRONT

DETAIL F
"W8 X 13 X 7'-6" STEEL POST

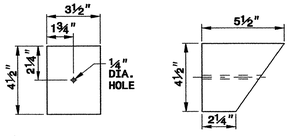

FRONT SIDE

DETAIL D
SLOPED RUBRAIL BLOCKOUT

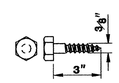

DETAIL E
LAG BOLT

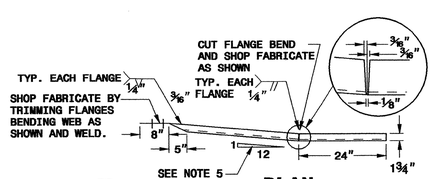

PLAN

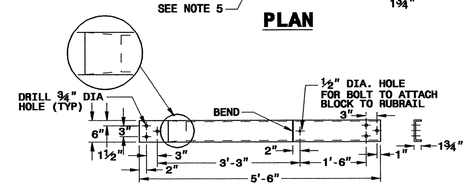

ELEVATION

DETAIL A
C6 x 8.2 RUBRAIL

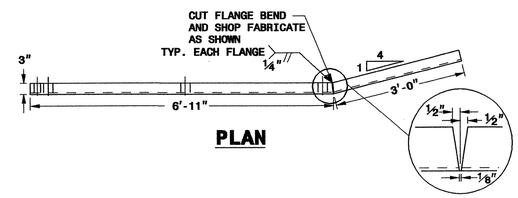

PLAN

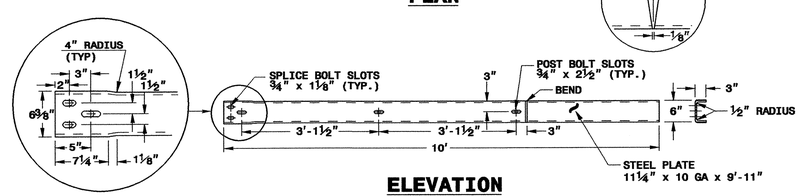

ELEVATION

DETAIL B
BENT PLATE RUBRAIL

PROJECT SERVICES UNIT
STANDARDS AND SPECIAL DESIGN
Office 919-250-4128 FAX 919-250-4119

GUARDRAIL ANCHOR UNIT TYPE B-77

ORIGINAL BY:	CONNDOT	DATE:	10-01-00
MODIFIED BY:	E.E. WARD	DATE:	04-07-04
CHECKED BY:		DATE:	
FILE SPEC.:			

25-OCT-2004 14:19
W:\Special Details\ericward\Misc. guardrail\NCHRP350 Approved\B-77 ConnDot.dgn
ericward AT DS212260

*DESIGN EXCEPTION: FOR
VERTICAL K VALUE
HORIZ. SSD
BRIDGE WIDTH

PROJECT REFERENCE	SHEET NO.
37661	11

ROADWAY DESIGN ENGINEER — NORTH CAROLINA PROFESSIONAL SEAL 27391 ENGINEER MICHAEL PEKAREK — 12/04/06

HYDRAULICS ENGINEER — NORTH CAROLINA PROFESSIONAL SEAL 9334 ENGINEER LARRY WELLS, JR. — 12/07/06

Prepared in the Office of: GIBSON ENGINEERS, PC

GRAPHIC SCALE 25' 0 25' 50'

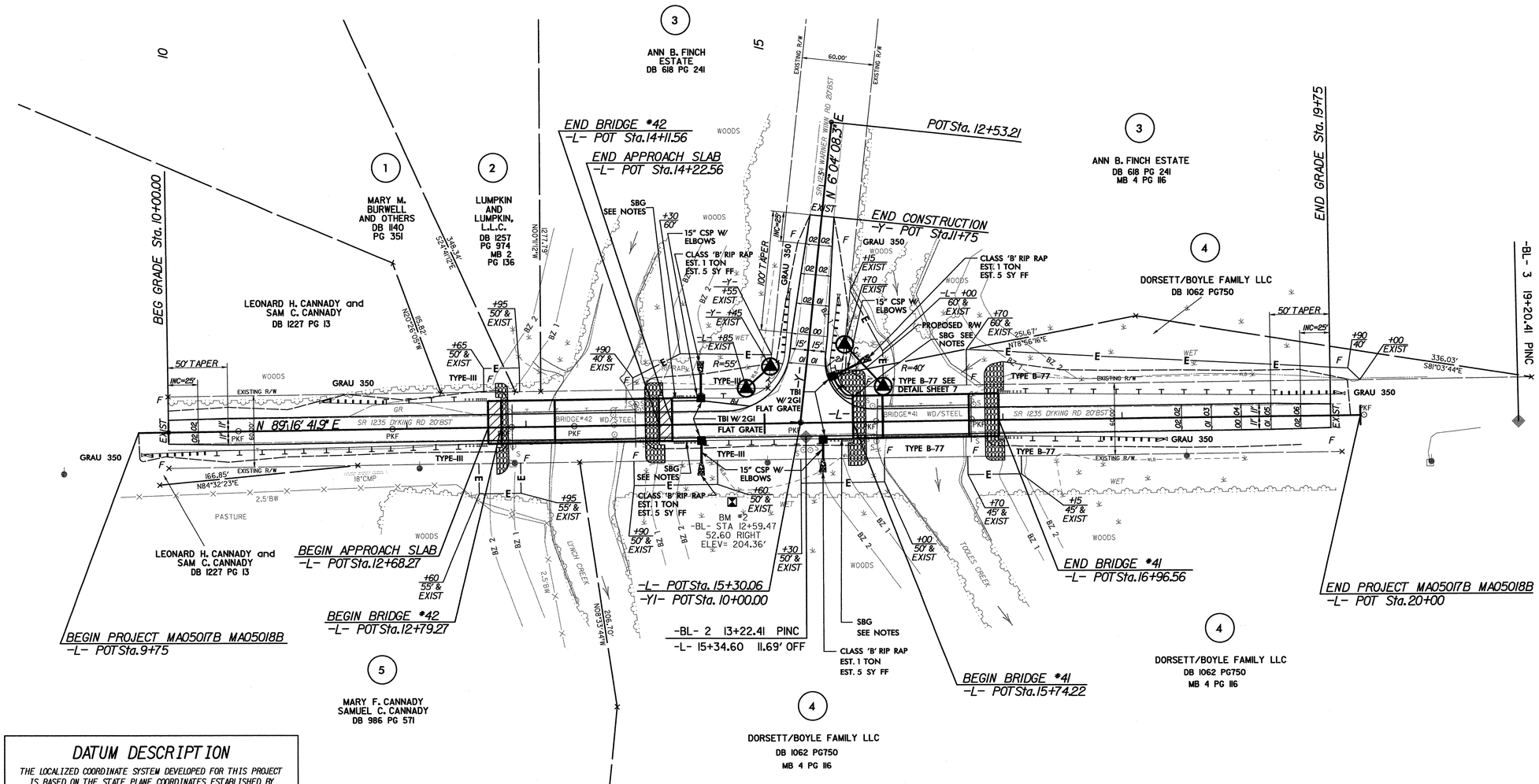

DATUM DESCRIPTION

THE LOCALIZED COORDINATE SYSTEM DEVELOPED FOR THIS PROJECT IS BASED ON THE STATE PLANE COORDINATES ESTABLISHED BY OTHERS FOR MONUMENT "BL-1"
WITH NAD 1983/95 STATE PLANE GRID COORDINATES OF NORTHING: 873745639(ft) EASTING: 2193836653(ft)
THE AVERAGE COMBINED GRID FACTOR USED ON THIS PROJECT (GROUND TO GRID) IS: 0.99998946
THE N.C. LAMBERT GRID BEARING AND LOCALIZED HORIZONTAL GROUND DISTANCE FROM "BL-1" TO -L- STATION 10+00 IS N 86° 10' 26.42" E 288.22'
ALL LINEAR DIMENSIONS ARE LOCALIZED HORIZONTAL DISTANCES
VERTICAL DATUM USED IS NAVD 88

NOTES:
1) TAPER GUARDRAIL AT A MAXIMUM RATE OF 50:1 LEFT OF STA.11+80 TO 12+50 AND TO STA.16+95 TO 19+85.
2) SBG = SHOULDER BERM GUTTER
3) SBG -L- STA.14+22.56 TO 14+50 +/- LT.
-L- STA.14+22.56 TO 14+50 +/- RT.
-Y- STA.10+40 +/- TO -L- STA.15+74.22 LT.
-L- STA.15+50 +/- TO 15+74.22 RT.
4) EXTEND FULL DEPTH PAVEMENT FROM PROPOSED PAVEMENT EDGE TO SBG.

FOR PROFILE SEE SHEET 12

bphillips
r:\roadway\proj\ma05017b_ma05018b_rdy_psh.dgn
12/7/2006 8:24:49 AM

PROJECT REFERENCE	SHEET NO.
37661	12

ROADWAY DESIGN ENGINEER

NORTH CAROLINA PROFESSIONAL SEAL 27891 ENGINEER MICHAEL PEKAREK

12/07/06

HYDRAULICS ENGINEER

Prepared in the Office of: GIBSON ENGINEERS, PC

VERTICAL SCALE 5' 0 5' 10'

HORIZONTAL SCALE 25' 0 25' 50'

*DESIGN EXCEPTION
VERTICAL K VALUE
HORIZ. SIGHT DISTANCE
BRIDGE WIDTH

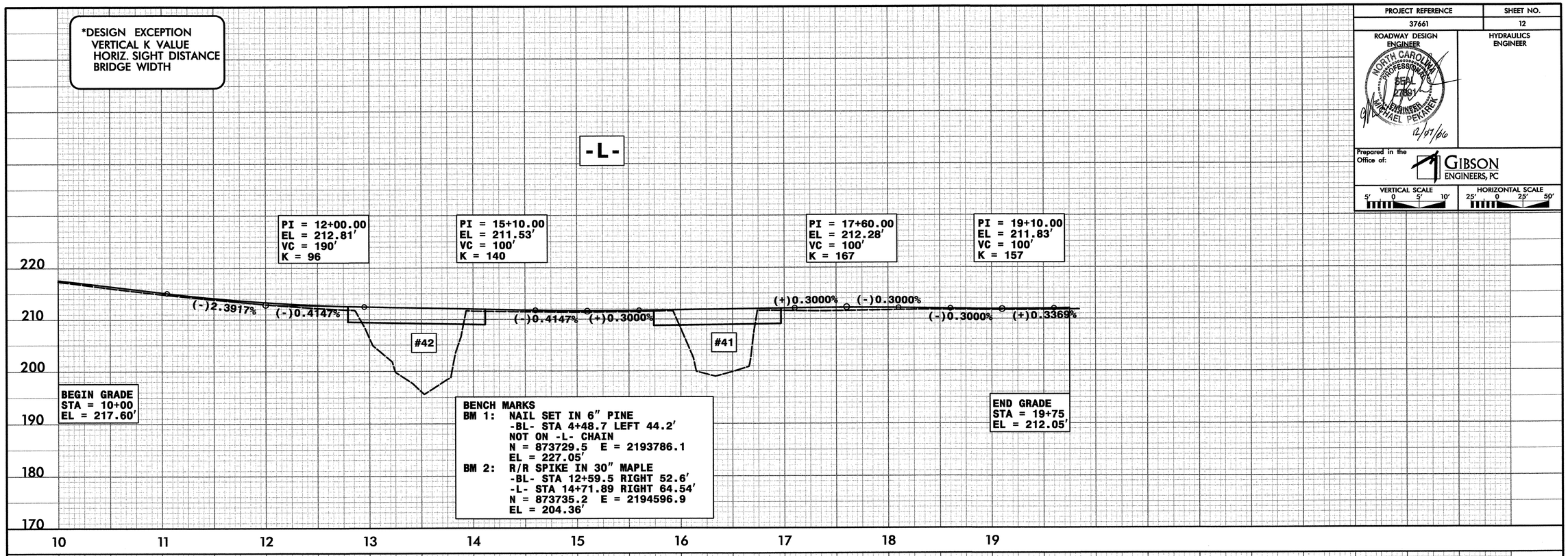

BENCH MARKS
BM 1: NAIL SET IN 6" PINE
-BL- STA 4+48.7 LEFT 44.2'
NOT ON -L- CHAIN
N = 873729.5 E = 2193786.1
EL = 227.05'
BM 2: R/R SPIKE IN 30" MAPLE
-BL- STA 12+59.5 RIGHT 52.6'
-L- STA 14+71.89 RIGHT 64.54'
N = 873735.2 E = 2194596.9
EL = 204.36'

FRANKLIN #42 HYDRAULIC DATA

DESIGN DISCHARGE	= 3690 CFS
DESIGN FREQUENCY	= 25 YRS
DESIGN HW ELEVATION	= 206.6 FT
BASE DISCHARGE	= 5420 CFS
BASE FREQUENCY	= 100 YRS
BASE HW ELEVATION	= 208.4 FT
OVERTOPPING DISCHARGE	= 7910 CFS
OVERTOPPING FREQUENCY	= 500+ YRS
OVERTOPPING ELEVATION	= 211.6 FT
DATE OF SURVEY	= 12-30-03
W.S. ELEVATION AT DATE OF SURVEY	= 200.12 FT

FRANKLIN #41 HYDRAULIC DATA

DESIGN DISCHARGE	= 2220 CFS
DESIGN FREQUENCY	= 25 YRS
DESIGN HW ELEVATION	= 205.8 FT
BASE DISCHARGE	= 3315 CFS
BASE FREQUENCY	= 100 YRS
BASE HW ELEVATION	= 207.3 FT
OVERTOPPING DISCHARGE	= 4920 CFS
OVERTOPPING FREQUENCY	= 500+ YRS
OVERTOPPING ELEVATION	= 211.6 FT
DATE OF SURVEY	= 9-20-04
W.S. ELEVATION AT DATE OF SURVEY	= 202.47 FT

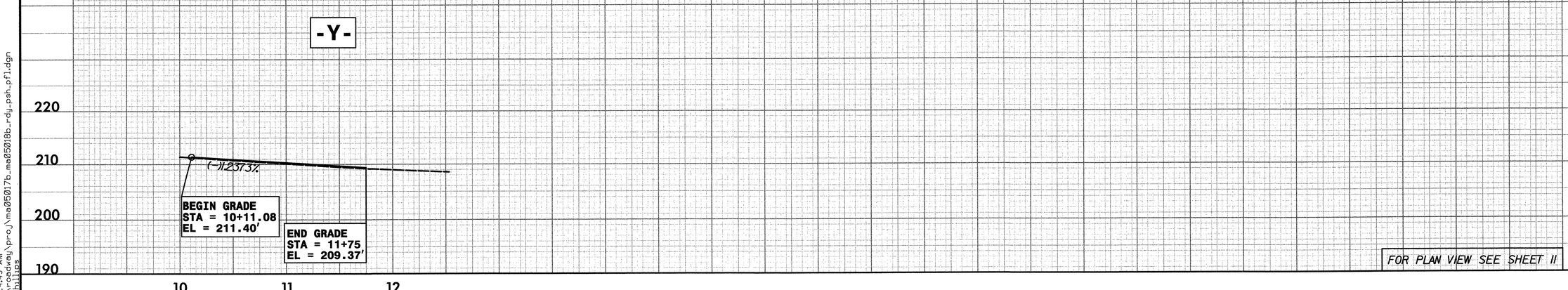

FOR PLAN VIEW SEE SHEET 11

12/7/2006
8:24:49 AM
c:\pwworkdir\proj\ma05017b_ma05018b_rdy_psh_pfl.dgn
bphillips

PROJ. REFERENCE NO.	SHEET NO.
37661	13
FRANKLIN #41 & #42	

0 5 10

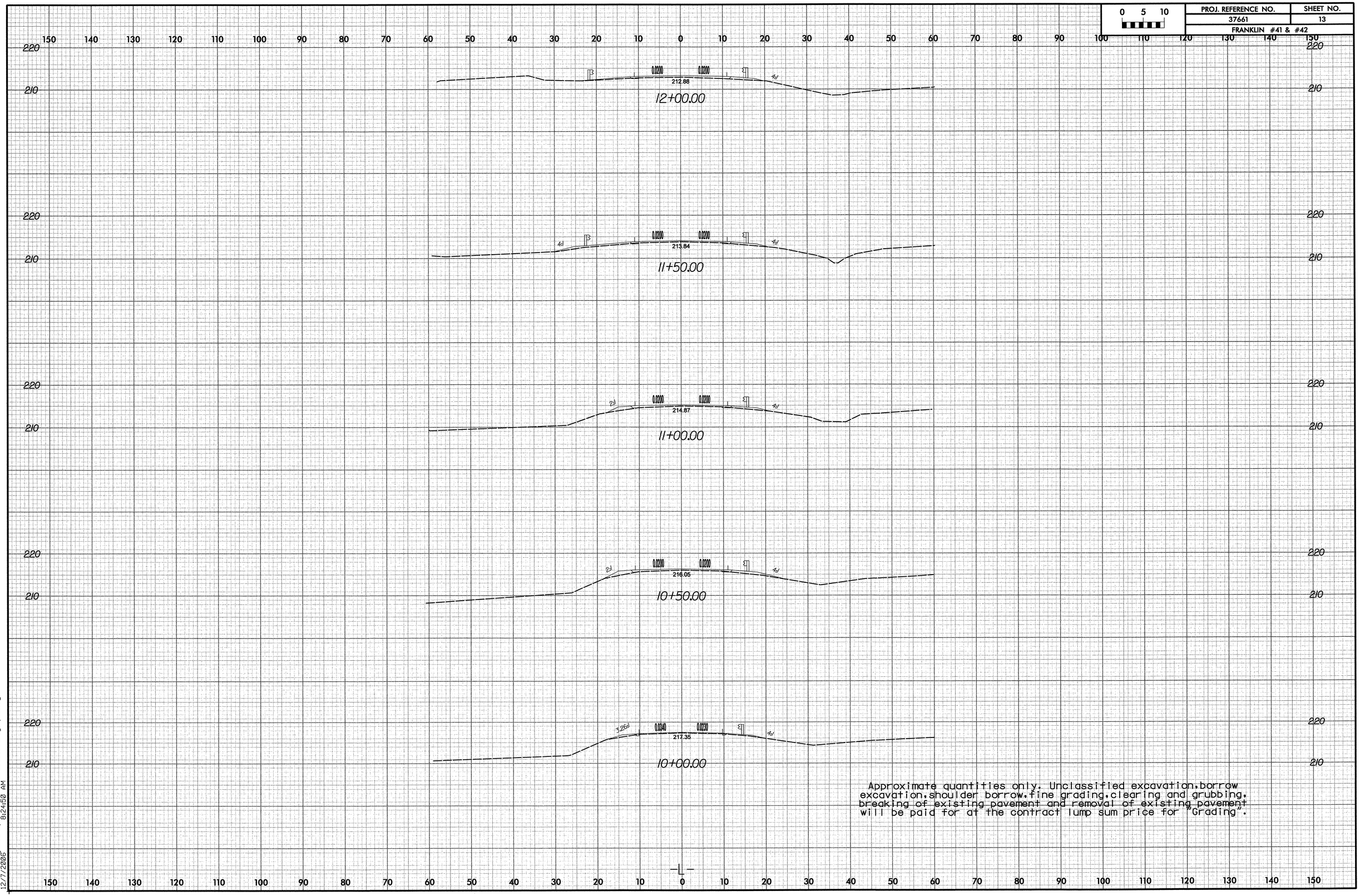

Approximate quantities only. Unclassified excavation, borrow excavation, shoulder borrow, fine grading, clearing and grubbing, breaking of existing pavement and removal of existing pavement will be paid for at the contract lump sum price for "Grading".

bphillips
r:\roadway\xsc\xpl\ma050170_ma050018b_rdy_xpl_1.dgn
12/7/2006 8:24:50 AM

PROJ. REFERENCE NO.	SHEET NO.
37661	14
FRANKLIN #41 & #42	

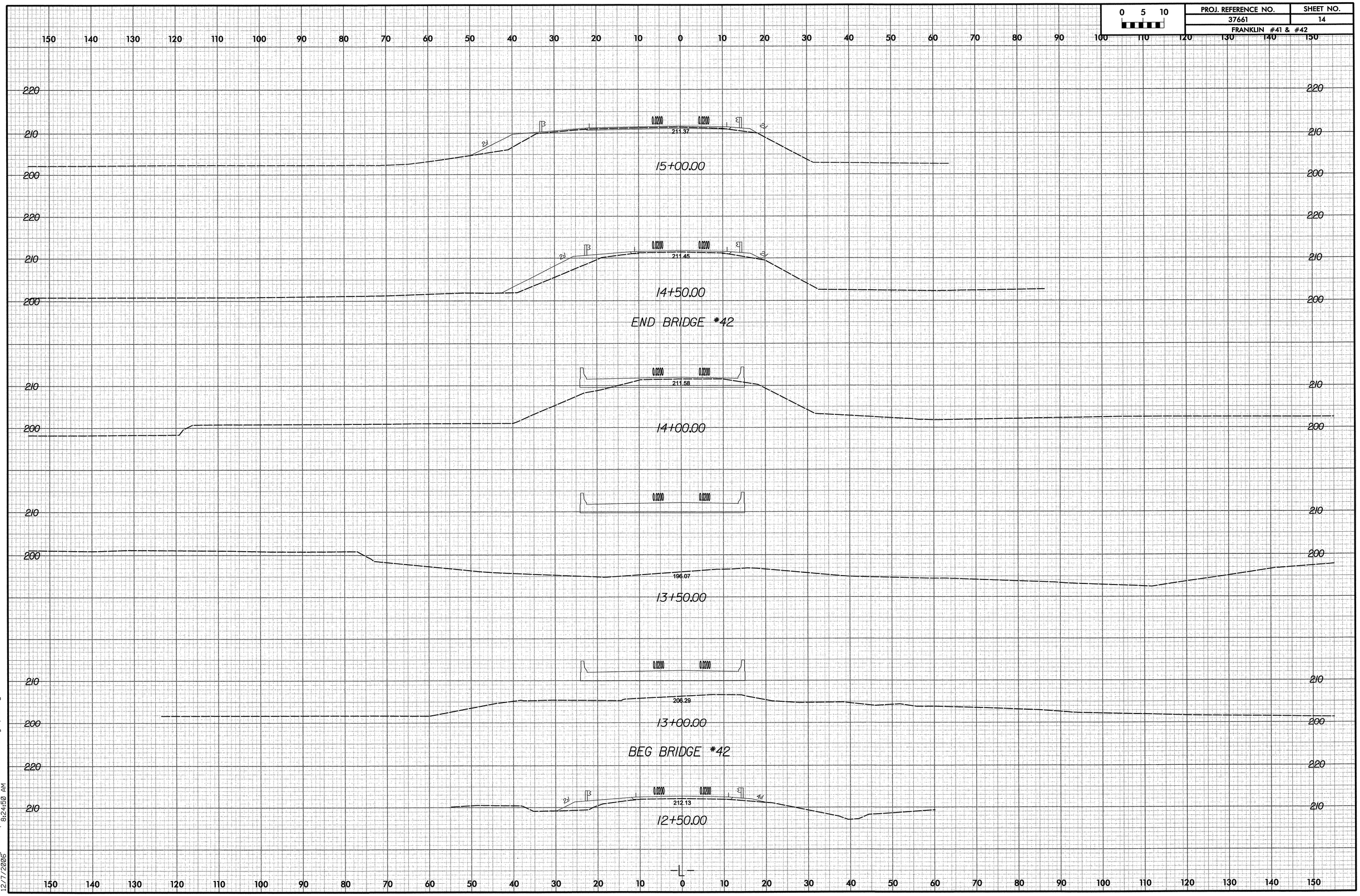

bphillips
r:\roadway\xsc\xpl\ma05017b_ma05018b_rdy_xpl_l.dgn
12/7/2006 8:24:50 AM

PROJ. REFERENCE NO.	SHEET NO.
37661	15
FRANKLIN #41 & #42	

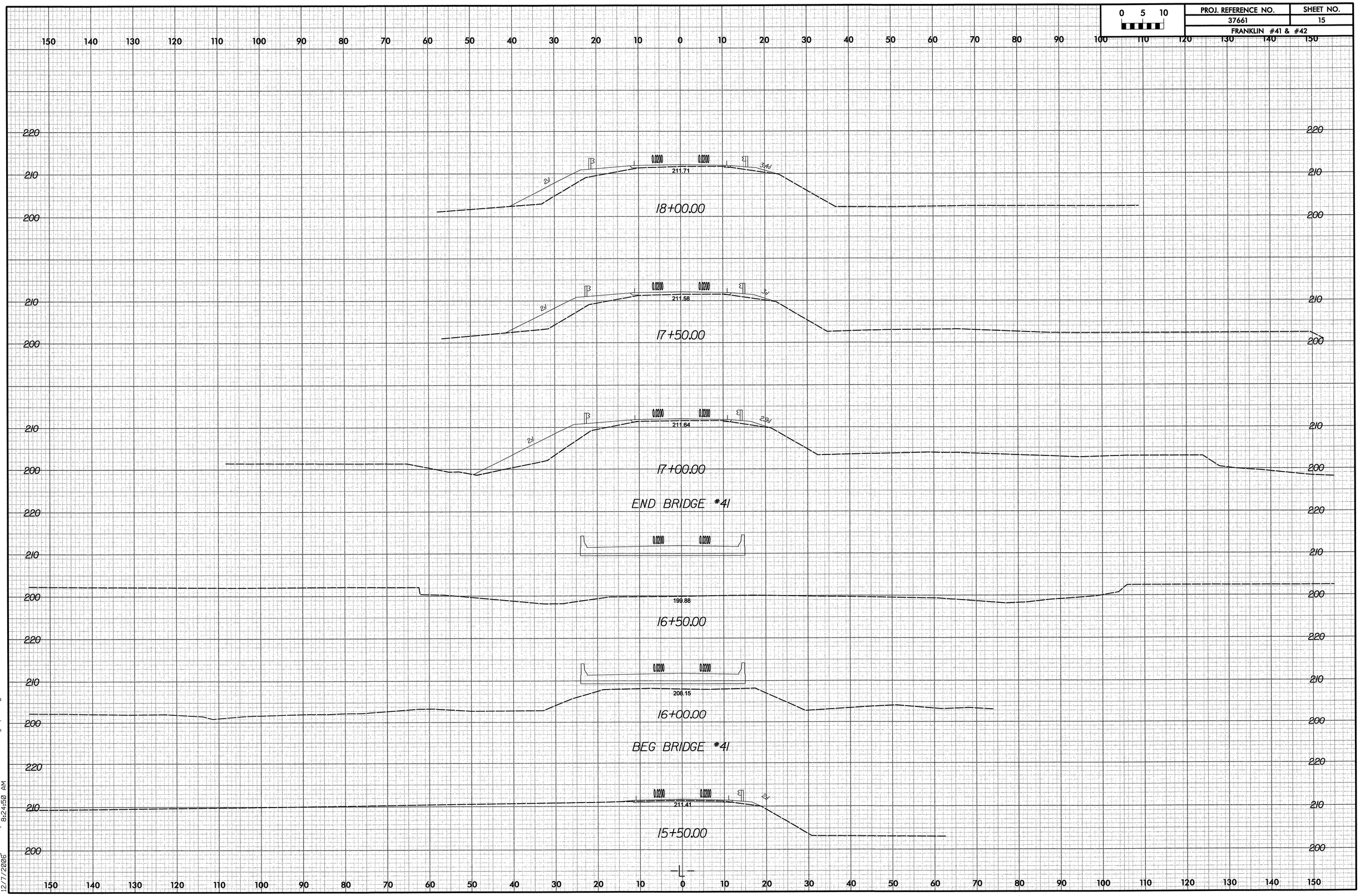

bphillips
r:\roadway\xsc\xpl\ma05017b_ma05018b_rdy_xpl_l.dgn
12/7/2006 8:24:50 AM

PROJ. REFERENCE NO.	SHEET NO.
37661	16
FRANKLIN #41 & #42	

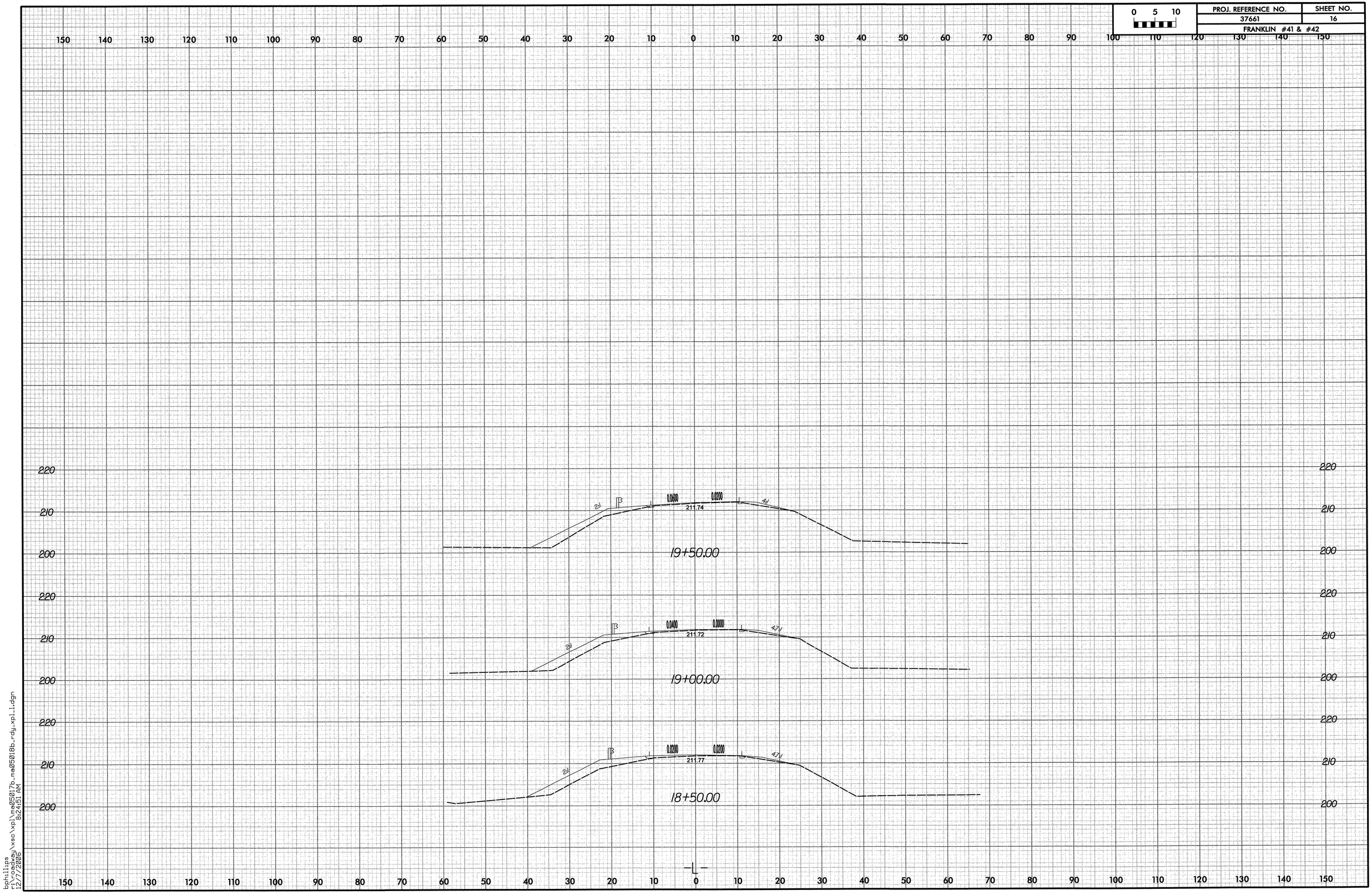

bphillips
r:\roadway\xsc\xpl\ma050170_ma050180_rdy_xpl_1.dgn
12/7/2006
8:24:51 AM

PROJ. REFERENCE NO.	SHEET NO.
37661	17
FRANKLIN #41 & #42	

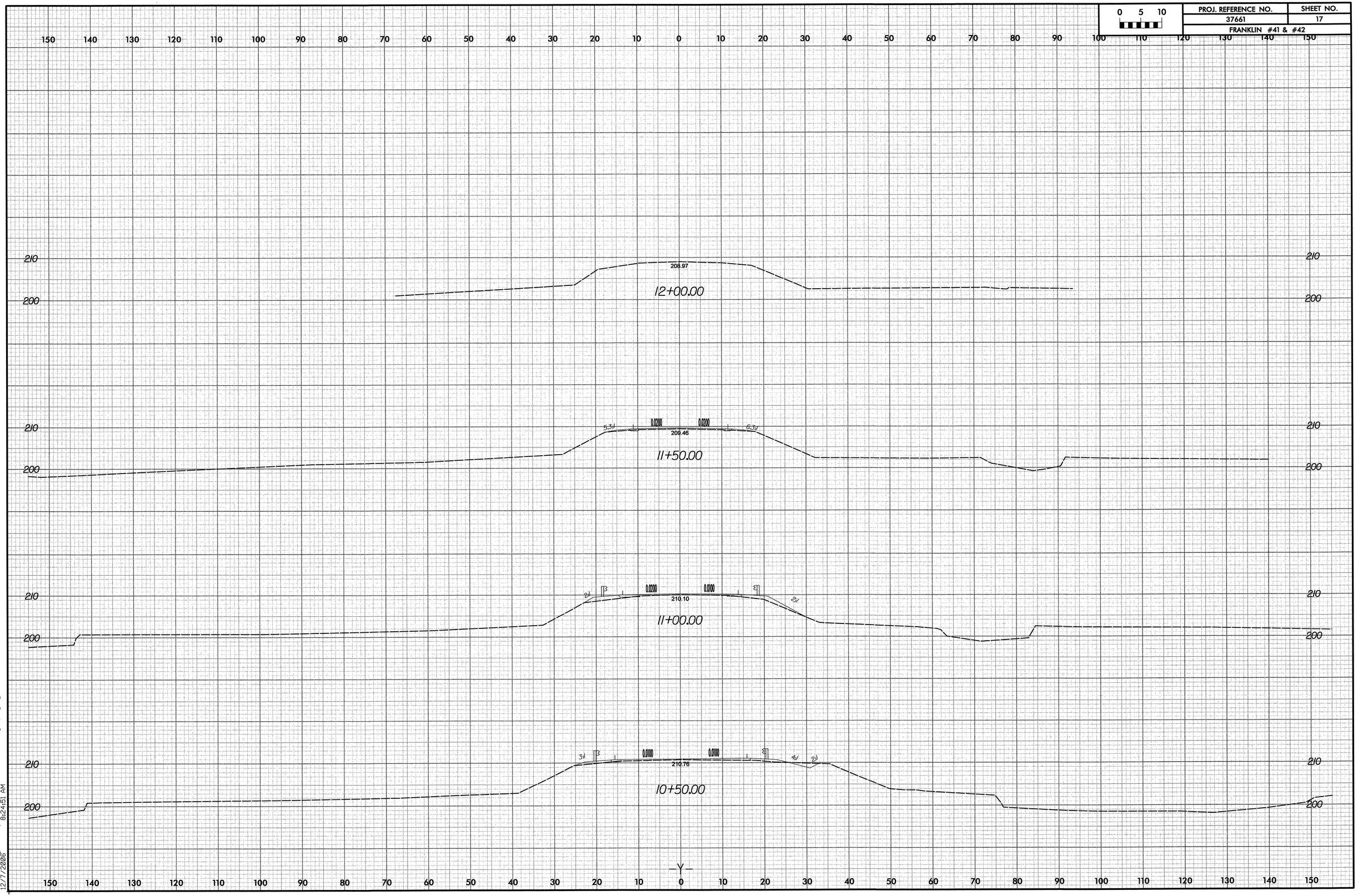

bphillips
r:\roadway\xsc\xpl\ma05017b_ma05018b_rdy_xpl_g.dgn
12/7/2006 8:24:51 AM

FRANKLIN COUNTY (BRIDGE #42) NCMA-5018B

EXISTING BRIDGE #42
24'-3" CLEAR ROADWAY
SPANS: 1 @ 35'-3", 1 @ 35'-0", 1 @ 35'-3"
CONCRETE DECK ON I-BEAMS
ABUTMENTS: TIMBER CAP ON TIMBER PILES
INTERIOR BENT: TIMBER CAP ON TIMBER PILES

BM #1:
NAIL SET IN 6" PINE
44.2' LT. OF STA. 4+48.7 -BL-
NOT ON -L- CHAIN
ELEV. = 227.05'

BM #2:
RAILROAD SPIKE IN 30" MAPLE
52.6' RT. OF STA. 12+59.5 -BL-
64.5' RT. OF STA. 14+71.89 -L-
ELEV. = 204.36'

HYDROGRAPHIC DATA:

DESIGN DISCHARGE -	3690 CFS
FREQUENCY OF DESIGN FLOOD -	25 YEAR
DESIGN HIGH WATER ELEVATION -	206.6
DRAINAGE AREA -	23.9 SQ. MI.
BASIC DISCHARGE (Q 100) -	5420 CFS
BASIC HIGH WATER ELEVATION -	208.4

OVERTOPPING FLOOD DATA:

OVERTOPPING DISCHARGE -	7910 CFS
FREQUENCY OF OVERTOPPING FLOOD -	500+ YEAR
OVERTOPPING FLOOD ELEVATION -	211.6

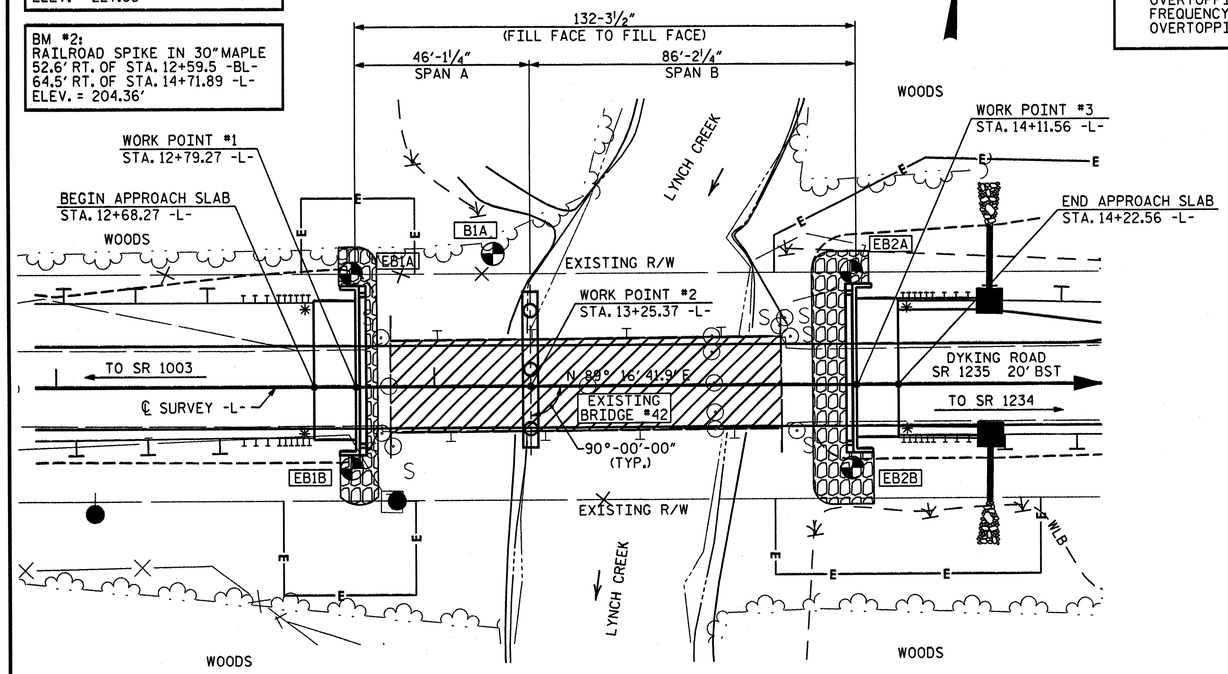

PLAN

SCALE : 1" = 20'

DENOTES GEO-TECH BORE HOLE LOCATIONS.

* DENOTES GUARDRAIL CONNECTION REQ'D., SEE "APPROACH SLAB" SHEET.

NOTES

FOR EROSION CONTROL MEASURES, SEE EROSION CONTROL PLANS.

REMOVAL OF THE EXISTING BRIDGE SHALL BE PERFORMED SO AS NOT TO ALLOW DEBRIS TO FALL INTO THE WATER. THE CONTRACTOR SHALL REMOVE THE BRIDGE AND SUBMIT PLANS FOR THE DEMOLITION IN ACCORDANCE WITH ARTICLE 402-2 OF THE STANDARD SPECIFICATIONS.

THE SUBSTRUCTURE OF THE EXISTING BRIDGE INDICATED ON THE PLANS IS FROM THE BEST INFORMATION AVAILABLE. SINCE THIS INFORMATION IS SHOWN FOR THE CONVENIENCE OF THE CONTRACTOR, THE CONTRACTOR SHALL HAVE NO CLAIM WHATSOEVER AGAINST THE DEPARTMENT OF TRANSPORTATION FOR ANY DELAYS OR ADDITIONAL COST INCURRED BASED ON DIFFERENCES BETWEEN THE EXISTING BRIDGE SUBSTRUCTURE SHOWN ON THE PLANS AND THE ACTUAL CONDITIONS AT THE PROJECT SITE.

THIS STRUCTURE HAS BEEN DESIGNED IN ACCORDANCE WITH HEC 18, "EVALUATING SCOUR AT BRIDGES", NOVEMBER 1995.

THIS BRIDGE HAS BEEN DESIGNED IN ACCORDANCE WITH THE REQUIREMENTS OF THE AASHTO STANDARD SPECIFICATIONS FOR SEISMIC DESIGN OF HIGHWAY BRIDGES FOR SEISMIC CATEGORY A.

INASMUCH AS THE PAINT SYSTEM ON THE EXISTING STRUCTURAL STEEL CONTAINS LEAD, THE CONTRACTOR'S ATTENTION IS DIRECTED TO ARTICLE 107-1 OF THE STANDARD SPECIFICATIONS. ANY COSTS RESULTING FROM COMPLIANCE WITH APPLICABLE STATE OR FEDERAL REGULATIONS PERTAINING TO HANDLING OF MATERIALS CONTAINING LEAD BASED PAINT SHALL BE INCLUDED IN THE BID PRICE FOR "REMOVAL OF EXISTING STRUCTURE AT STATION 13+45.42".

WHEN DRIVING PILES, THE MAXIMUM BLOW COUNT SHALL NOT BE EXCEEDED.

PILES FOR END BENT #1 AND END BENT #2 SHALL BE DRIVEN TO A MINIMUM BEARING CAPACITY OF 50 TONS EACH.

THE SCOUR CRITICAL ELEVATION FOR BENT #1 IS ELEV. 189 FT. THE SCOUR CRITICAL ELEVATIONS ARE FOR USE BY MAINTENANCE FORCES TO MONITOR POSSIBLE SCOUR PROBLEMS DURING THE LIFE OF THE STRUCTURE.

THIS STRUCTURE HAS BEEN DESIGNED IN ACCORDANCE WITH FHWA'S TECHNICAL ADVISORY T5140.20 (SCOUR AT BRIDGES).

THIS BRIDGE HAS BEEN DESIGNED BY THE STRENGTH DESIGN METHOD AS SPECIFIED IN AASHTO STANDARD SPECIFICATIONS.

THE QUANTITY OF RIP RAP TO BE PAID FOR WILL BE THE ACTUAL NUMBER OF TONS OF EACH CLASS OF RIP RAP WHICH HAS BEEN INCORPORATED INTO THE COMPLETED AND ACCEPTED WORK. THE RIP RAP WILL BE MEASURED BY BEING WEIGHED IN TRUCKS ON CERTIFIED PLATFORM SCALES OR OTHER CERTIFIED WEIGHING DEVICES. THE QUANTITY OF RIP RAP WILL BE PAID FOR AT THE CONTRACT UNIT PRICE PER TON:

PLAIN RIP RAP CLASS II (2'-0" THICK) & FILTER FABRIC

END BENT #1	110	TONS & 122 SY FILTER FABRIC
END BENT #2	219	TONS & 243 SY FILTER FABRIC
TOTAL	329	TONS & 365 SY FILTER FABRIC

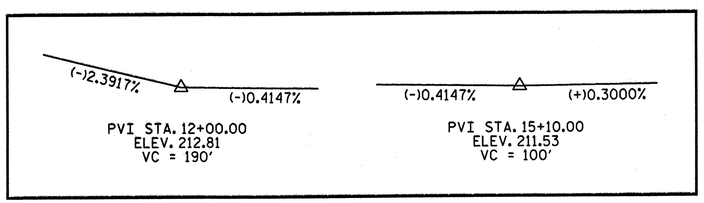

GRADE DATA -L- (SR 1235)

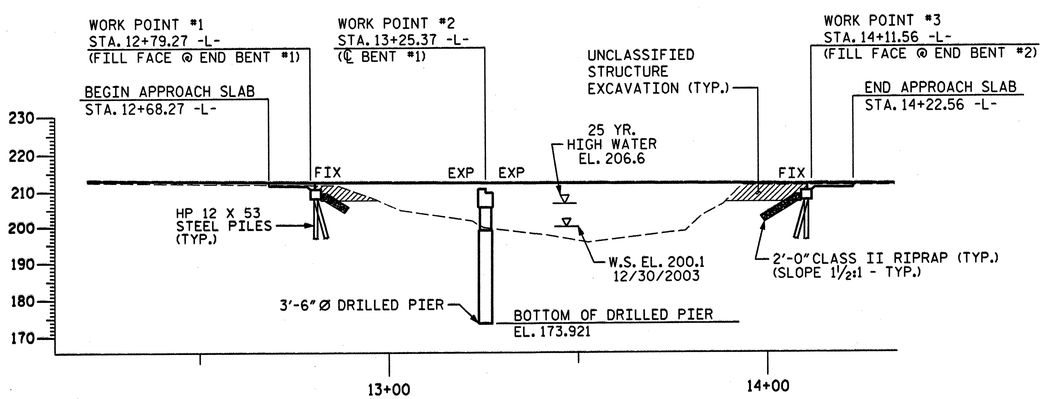

PROFILE ALONG ℄ SURVEY

SCALE : 1" = 20'

DRILLED PIER NOTES

THE LOCATION OF THE CONSTRUCTION JOINT IN THE DRILLED PIERS IS BASED ON AN APPROXIMATE GROUND LINE ELEVATION. IF THE CONSTRUCTION JOINT IS ABOVE THE ACTUAL GROUND LINE ELEVATION, THE CONTRACTOR SHALL PLACE THE CONSTRUCTION JOINT 1 FT. BELOW THE GROUND LINE.

THE DRILLED PIERS AT BENT #1 HAVE BEEN DESIGNED FOR BOTH SKIN FRICTION AND TIP BEARING. THE REQUIRED TIP BEARING CAPACITY IS 15 TSF.

DRILLED PIERS FOR BENT #1 HAVE BEEN DESIGNED FOR AN APPLIED LOAD OF 190 TONS EACH AT THE TOP OF THE COLUMN.

DRILLED PIERS AT BENT #1 SHALL EXTEND TO AN ELEVATION NO HIGHER THAN 174 FEET AND SATISFY THE REQUIRED TIP BEARING CAPACITY

THE REQUIRED TIP BEARING CAPACITY AT BENT #1 SHALL BE VERIFIED.

PERMANENT STEEL CASING MAY BE REQUIRED FOR DRILLED PIERS AT BENT #1. IF REQUIRED, THE CASING SHALL NOT EXTEND BELOW ELEVATION 190 FT WITHOUT THE ENGINEER'S PERMISSION. THE NEED FOR PERMANENT STEEL CASING WILL BE DETERMINED BY THE ENGINEER.

SPT TESTING IS NOT REQUIRED TO DETERMINE THE TIP BEARING CAPACITY OF DRILLED PIERS AT BENT #1.

SID INSPECTIONS ARE NOT REQUIRED TO DETERMINE THE BOTTOM CLEANLINESS OF THE DRILLED PIERS AT BENT #1.

FOR PERMANENT STEEL CASING, SEE SPECIAL PROVISIONS FOR DRILLED PIERS.

NO SEPARATE PAYMENT SHALL BE MADE FOR ANY ADDITIONAL STEEL REQUIRED IN CONSTRUCTION OF THE DRILLED PIER AS THIS IS CONSIDERED INCIDENTAL TO THE LINEAR FOOT PRICE FOR DRILLED PIER.

THE CONTRACTORS ATTENTION IS CALLED TO THE FACT THAT THE REINFORCEMENT FOR THE DRILLED PIER IS DETAILED WITH THREE FEET OF EXTRA LENGTH.

SLURRY CONSTRUCTION SHALL NOT BE USED FOR THIS PROJECT.

FOR DRILLED PIERS, SEE SPECIAL PROVISIONS.

NORTH CAROLINA PROFESSIONAL SEAL 19831 ENGINEER DAVID B. SIMPSON, JR.
5-30-06

PLANS PREPARED BY:
SIMPSON ENGINEERS & ASSOCIATES
5520 Dillard Drive
Suite 120
Cary, NC 27518
(919) 852-0468
(919) 852-0598 (Fax)
www.simpsonengr.com

WBS NO. 37661
FRANKLIN COUNTY
STATION: 13+45.42 -L-

REPLACES BRIDGE NO. 42

STATE OF NORTH CAROLINA
DEPARTMENT OF TRANSPORTATION
RALEIGH

GENERAL DRAWING
(BRIDGE ON SR 1235 OVER LYNCH CREEK)

36' CLEAR ROADWAY - 90° SKEW

REVISIONS								SHEET NO.
NO.	BY:	DATE:	NO.	BY:	DATE:			18
1			3					TOTAL SHEETS
2			4					62

DRAWN BY : R. SEALEY DATE : 5/06
CHECKED BY : M. AVERETTE DATE : 5/06

5/30/2006 3:37:34 PM g:\bmu\franklin42\drawings\ncma5018b_sd_gd_01.dgn

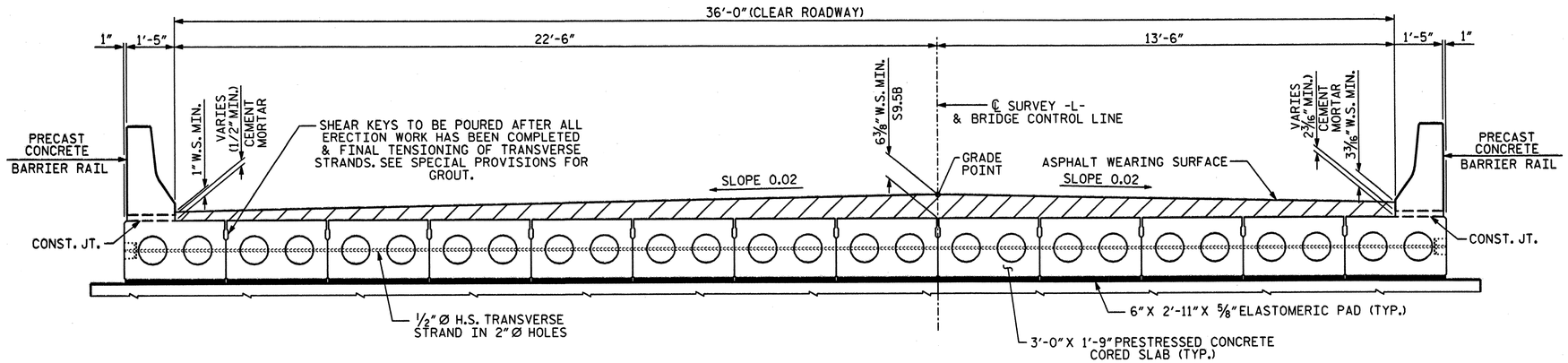

TYPICAL SECTION

(SPAN A)

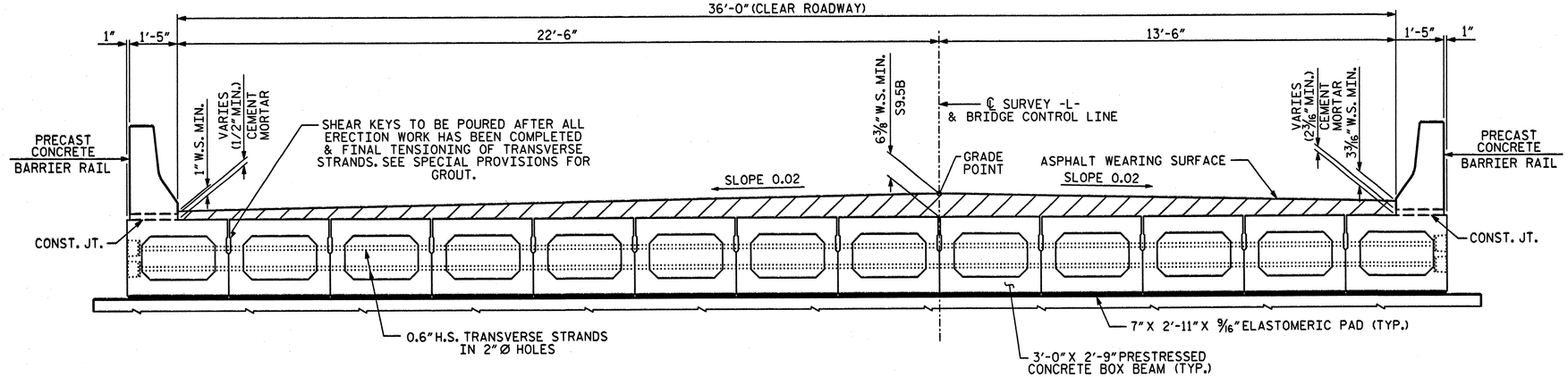

TYPICAL SECTION

(SPAN B)

GENERAL NOTES

ASSUMED LIVE LOAD = HS 20 OR ALTERNATE LOADING.

STRUCTURAL STEEL ITEMS SHALL BE OF A GRADE CONFORMING TO EITHER ASTM A36 OR A373, EXCEPT HIGH STRENGTH BOLTS. HIGH STRENGTH BOLTS SHALL BE ASTM A325. ALL STRUCTURAL STEEL SHALL BE GALVANIZED AS PER THE SPECIFICATION.

ALL MATERIAL AND WORKMANSHIP SHALL COMPLY WITH THE APPLICABLE REQUIREMEMNTS OF THE STANDARD SPECIFICATIONS FOR ROADS AND STRUCTURES OF THE NC DEPARTMENT OF TRANSPORTATION DATED JANUARY 2002 AND WITH THE SPECIAL PROVISIONS.

UNLESS OTHERWISE NOTED ON THE PLANS, ALL EXPOSED CORNERS ON STRUCTURES SHALL BE CHAMFERED 3/4".

FOR ELASTOMERIC BEARINGS, SEE SPECIAL PROVISIONS.

EXPANSION JOINT MATERIAL SHALL MEET THE REQUIREMENTS OF AASHTO SPECIFICATION M153 TYPE I, II, OR III.

JOINT SEALER SHALL BE LOW MODULUS SILICONE SEALANT, SEE SECTION 1028-4 OF THE STANDARD SPECIFICATIONS.

WBS NO. 37661

FRANKLIN COUNTY

STATION: 13+45.42 -L-

REPLACES BRIDGE NO. 42

NORTH CAROLINA PROFESSIONAL SEAL 19831 ENGINEER DAVID B. SIMPSON, JR.

5-30-06

PLANS PREPARED BY:

SIMPSON ENGINEERS & ASSOCIATES
5520 Dillard Drive
Suite 120
Cary, NC 27518
(919) 852-0468
(919) 852-0598 (Fax)
www.simpsonengr.com

STATE OF NORTH CAROLINA
DEPARTMENT OF TRANSPORTATION
RALEIGH

TYPICAL SECTIONS

36' CLEAR ROADWAY - 90° SKEW

REVISIONS						SHEET NO.
NO.	BY:	DATE:	NO.	BY:	DATE:	19
1			3			TOTAL SHEETS
2			4			62

DRAWN BY : R. SEALEY DATE : 5/06
CHECKED BY : M. AVERETTE DATE : 5/06

5/30/2006 3:37:33 PM gr:\bmu\franklin42\drawings\nomd5018b_sd_ts_01.dgn

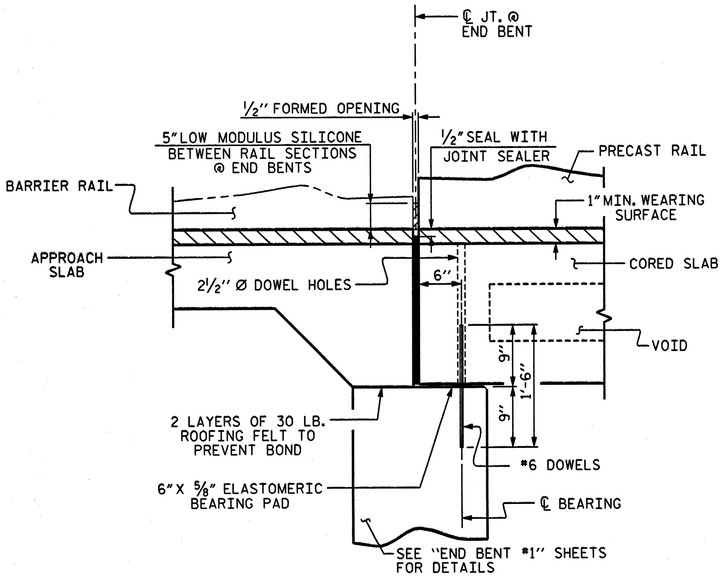

SECTION AT END BENT #1

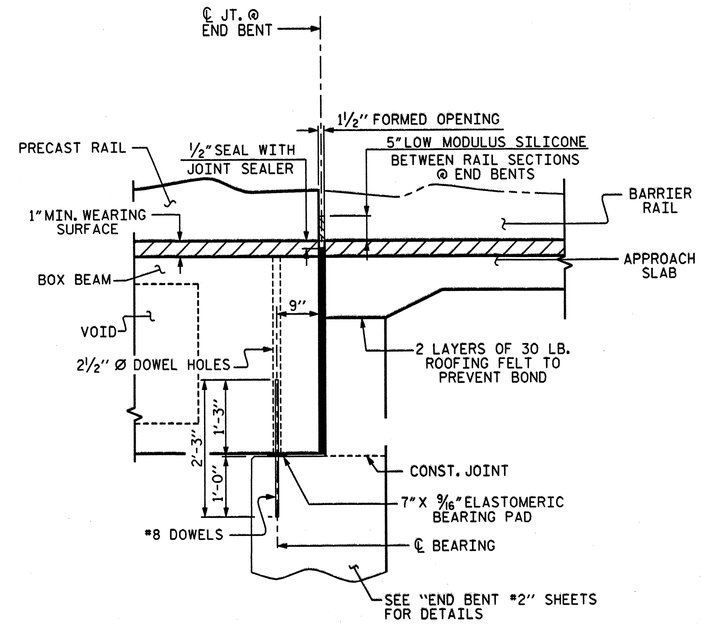

SECTION AT END BENT #2

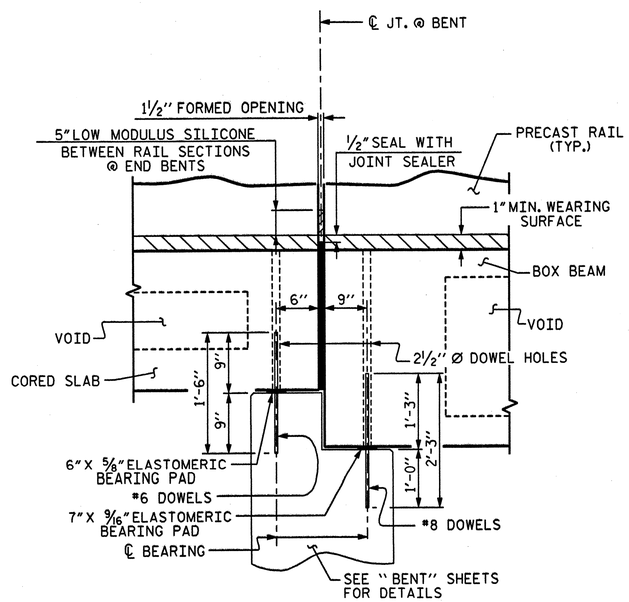

SECTION AT BENT

WBS NO. 37661

FRANKLIN COUNTY

STATION: 13+45.42 -L-

REPLACES BRIDGE NO. 42

STATE OF NORTH CAROLINA
DEPARTMENT OF TRANSPORTATION
RALEIGH

SUPERSTRUCTURE DETAILS

36' CLEAR ROADWAY - 90° SKEW

NORTH CAROLINA PROFESSIONAL SEAL 19931 ENGINEER DAVID B. SIMPSON, JR.
5-30-06

PLANS PREPARED BY:

SIMPSON ENGINEERS & ASSOCIATES
5520 Dillard Drive
Suite 120
Cary, NC 27518
(919) 852-0468
(919) 852-0598 (Fax)
www.simpsonengr.com

REVISIONS								SHEET NO.
NO.	BY:	DATE:	NO.	BY:	DATE:			20
1			3					TOTAL SHEETS
2			4					62

DRAWN BY : R. SEALEY DATE : 5/06
CHECKED BY : M. AVERETTE DATE : 5/06

5/30/2006 3:37:33 PM gr\bmu\franklin42\drawings\ncma5018b_sd_supd_01.dgn

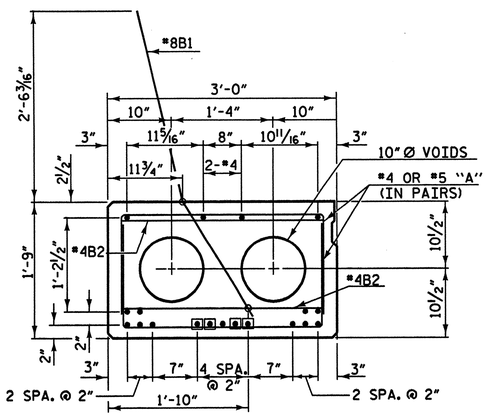

⚠ 45' SPAN

17 - 1/2" Ø H.S. STRANDS
EXTERIOR SLAB SECTIONS

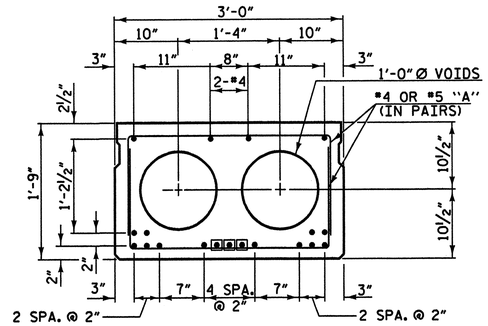

⚠ 45' SPAN

17 - 1/2" Ø H.S. STRANDS
INTERIOR SLAB SECTIONS

▣ DENOTES SHEATHED STRAND
(SEE SHEATH CHARTS)

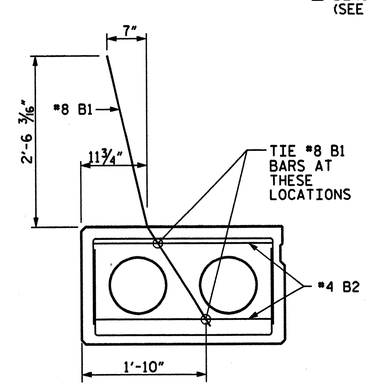

TIE LOCATION FOR #8 B1

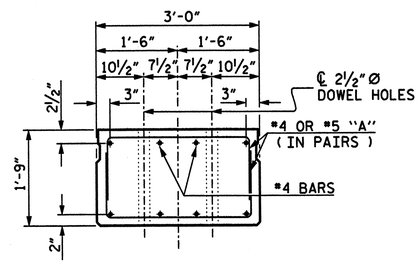

SLAB END ELEVATION

THE 2 1/2" Ø DOWEL HOLES AT EXPANSION ENDS OF SLAB SECTIONS SHALL BE FILLED WITH LOW MODULUS SILICONE MATERIAL TO 1 1/2" ABOVE TOP OF DOWELS AND THEN FILLED WITH GROUT, SEE SPECIAL PROVISIONS.

THE 2 1/2" Ø DOWEL HOLES AT FIXED ENDS OF SLAB SECTIONS SHALL BE FILLED WITH GROUT, SEE SPECIAL PROVISIONS.

SHEATH CHART

SPAN LENGTH	NUMBER OF SHEATHED STRANDS PER EXTERIOR SLAB SECTIONS	NUMBER OF SHEATHED STRANDS PER INTERIOR SLAB SECTIONS
* 45'	4	3

* BOND SHALL BE BROKEN ON THESE STRANDS FOR A DISTANCE OF 4'-0" FROM END OF SLAB

INTERIOR SLAB UNIT	45'
CAMBER (SLAB UNIT ALONE IN PLACE)	1" (UP)
DEFLECTION (SUPERIMPOSED DEAD LOAD)	* 3/16" (DOWN)
FINAL DEFLECTION	13/16" (UP)
* INCLUDES FUTURE WEARING SURFACE	

EXTERIOR SLAB UNIT	45'
CAMBER (SLAB UNIT ALONE IN PLACE)	7/8" (UP)
DEFLECTION (SUPERIMPOSED DEAD LOAD)	* 3/16" (DOWN)
FINAL DEFLECTION	11/16" (UP)
* INCLUDES FUTURE WEARING SURFACE	

CORED SLAB NOTES

CONCRETE = f'c - 5000psi 45' SPAN ONLY (MIN. COMP. STRENGTH @ 28 DAYS).
f'ci - 4000psi 45' SPAN ONLY (MIN. COMP. STRENGTH @ TRANSFER OF STRESSING FORCE).

SIZE	TYPE	AREA	ULTIMATE STR.	APPLIED FORCE
1/2" Ø	HIGH STR.	0.153 SQ. IN. PER CABLE	41,300 LBS.	30,980 LBS. PER CABLE

JOINT SEALER SHALL BE LOW MODULUS SILICONE SEALANT. SEE SECTION 1028-4 OF THE STANDARD SPECIFICATIONS.

THE CONTRACTOR, AT HIS OPTION, MAY USE STRESS RELIEVED STRANDS IN LIEU OF LOW RELAXATION STRANDS. DESIGN AND STRAND PATTERN MUST PROVIDE AT LEAST THE SAME NET COMPRESSIVE STRESS AFTER THE LOSSES.

THE ULTIMATE STRENGTH OF THE CORED SLAB UNIT MUST MEET THE REQUIREMENTS OF THE APPLICABLE AASHTO SPECIFICATIONS. STRESS RELIEVED STRANDS SHALL BE TENSIONED AND ANCHORED AT A LOAD EQUAL TO 70% OF ITS ULTIMATE STRENGTH. THIS APPLIED PRESTRESSED FORCE SHALL BE SHOWN ON THE PLANS. SIZE OF STRESS RELIEVED STRANDS SHALL NOT BE SMALLER THAN THOSE SHOWN FOR LOW RELAXATION STRANDS. DESIGN AND DETAIL PLANS USING STRESS RELIEVED STRANDS MUST BE SUBMITTED TO THE ENGINEER. ANY ADDITIONAL COST DUE TO THE USE OF STRESS RELIEVED STRANDS WILL BE PAID FOR BY THE CONTRACTOR. STRANDS SHALL BE CUT FLUSH WITH THE ENDS OF THE SLABS AND EPOXY COATED. SEE SPECIAL PROVISIONS.

A POSITIVE HOLD-DOWN SYSTEM MUST BE EMPLOYED TO PREVENT VOIDS FROM RISING.

SPIRAL WIRE REINFORCEMENT MAY BE USED IN LIEU OF DEFORMED BARS FOR STIRRUPS. (MIN. W3.5 x 6" PITCH).

ALL PRESTRESSING STRANDS SHALL BE 7-WIRE LOW RELAXATION GRADE 270 STRANDS AND SHALL CONFORM TO AASHTO M203 EXCEPT FOR SAMPLING REQUIREMENTS WHICH SHALL BE IN ACCORDANCE WITH THE STANDARD SPECIFICATIONS.

ALL REINFORCING STEEL CAST WITH THE CORED SLAB SECTIONS SHALL BE GRADE 60 AND SHALL BE INCLUDED IN THE UNIT PRICE BID FOR PRESTRESSED CONCRETE CORED SLABS.

RECESSES FOR TRANSVERSE STRANDS SHALL BE GROUTED AFTER THE TENSIONING OF THE STRANDS.

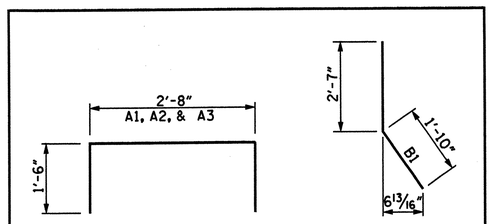

REINFORCING BAR TYPES

BAR DIMENSIONS ARE OUT TO OUT

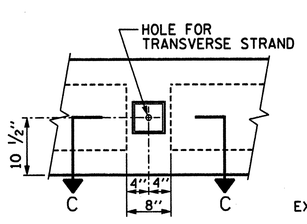

ELEVATION

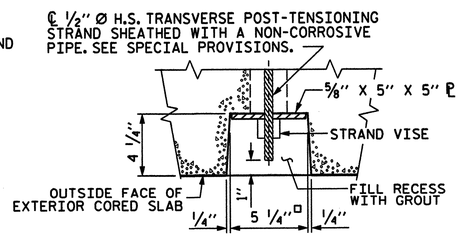

SECTION C-C

DETAIL A
GROUTED RECESS AT END OF POST-TENSIONED STRAND CORED SLAB

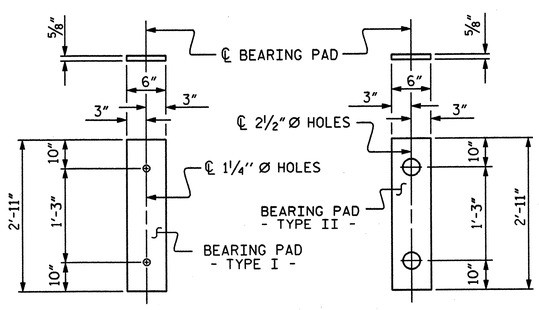

FIXED END
(TYPE I - 13 REQ'D)

EXPANSION END
(TYPE II - 13 REQ'D)

ELASTOMERIC BEARING DETAILS

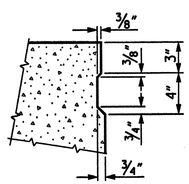

SHEAR KEY DETAIL

NOTE: OMIT SHEAR KEY ON OUTSIDE OF EXTERIOR CORED SLAB

NORTH CAROLINA PROFESSIONAL SEAL 19831 ENGINEER DAVID B. SIMPSON, JR.
10-30-06

WBS NO. 37661
FRANKLIN COUNTY
STATION: 13+45.42 -L-
REPLACES BRIDGE NO. 42

STATE OF NORTH CAROLINA
DEPARTMENT OF TRANSPORTATION
RALEIGH

STANDARD
PRESTRESSED CORED SLAB DETAILS
45' SPAN
36' CLEAR ROADWAY - 90° SKEW

PLANS PREPARED BY:
SIMPSON ENGINEERS & ASSOCIATES
5520 Dillard Drive
Suite 120
Cary, NC 27518
(919) 852-0468
(919) 852-0598 (Fax)
www.simpsonengr.com

⚠ REVISED TO SHOW CORRECT STRAND PATTERN IN 45' SPAN EXTERIOR AND INTERIOR SLAB SECTION.

REVISIONS							
NO.	BY:	DATE:	NO.	BY:	DATE:	SHEET NO.	21
1	MAA	10/30/06	3			TOTAL SHEETS	62
2			4				

DRAWN BY: R. SEALEY DATE: 5/06
CHECKED BY: M. AVERETTE DATE: 5/06

10/30/2006 4:38:08 PM g:\BMU\Franklin 42\Drawings\NCMA50188_sd_csd_01.dgn

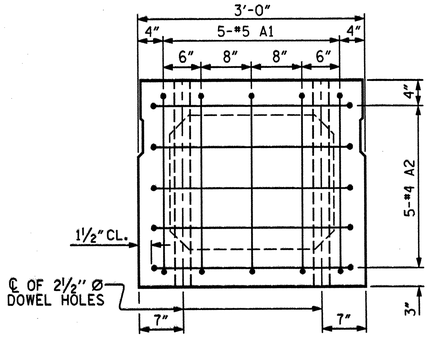

END ELEVATION

SHOWING PLACEMENT OF #5 & #4 "A" BARS AND LOCATION OF DOWEL HOLES.
(INTERIOR BOX BEAM SECTION SHOWN-EXTERIOR SECTION SIMILAR EXCEPT SHEAR KEY LOCATION. STRAND LAYOUT NOT SHOWN.)

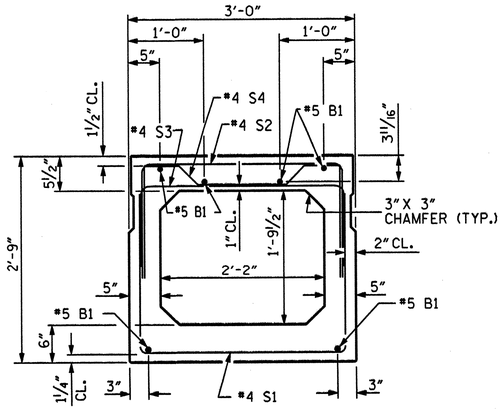

INTERIOR BOX BEAM SECTION

(STRAND LAYOUT NOT SHOWN)

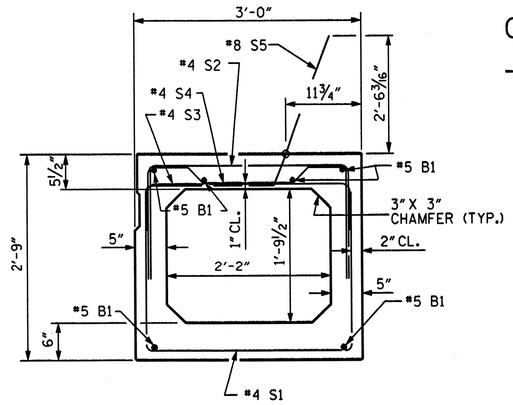

EXTERIOR BOX BEAM SECTION

(STRAND LAYOUT NOT SHOWN)

0.6" Ø LOW RELAXATION STRAND LAYOUT

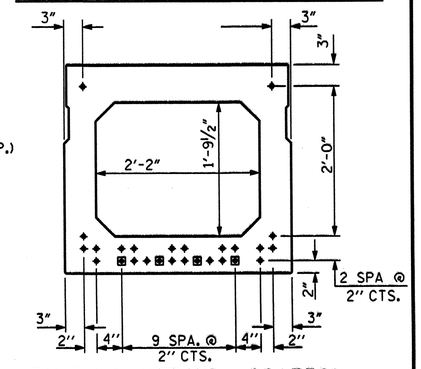

TYPICAL STRAND LOCATION

(26 STRANDS REQUIRED)

(INTERIOR BOX BEAM SECTION SHOWN-EXTERIOR SECTION SIMILAR EXCEPT SHEAR KEY LOCATION

DEBONDING LEGEND

- ● FULLY BONDED STRANDS
- ◘ STRANDS DEBONDED FOR 4'-0" FROM END OF BOX BEAM

BAR TYPES

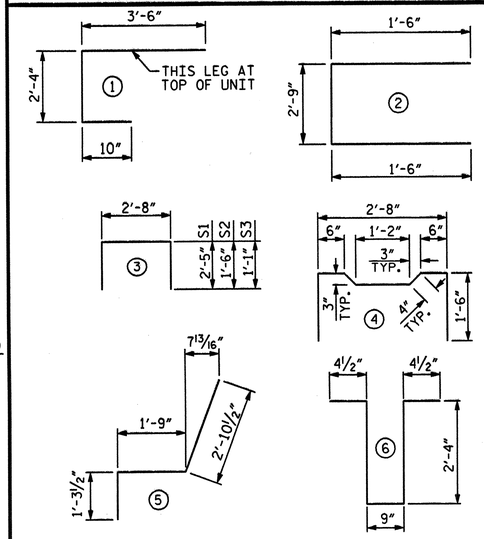

ALL BAR DIMENSIONS ARE OUT TO OUT

BILL OF MATERIAL FOR ONE BOX BEAM SECTION

BAR	NO.	SIZE	TYPE	EXTERIOR UNIT LENGTH	EXTERIOR UNIT WEIGHT	INTERIOR UNIT LENGTH	INTERIOR UNIT WEIGHT
A1	10	5	1	6'-8"	70	6'-8"	70
A2	34	4	2	5'-9"	131	5'-9"	131
B1	18	5	STR	30'-2"	566	30'-2"	566
D1	12	4	6	6'-2"	49	6'-2"	49
D2	8	4	STR	2'-7"	14	2'-7"	14
S1	68	4	3	7'-6"	341	7'-6"	341
S2	68	4	3	5'-8"	257	5'-8"	257
S3	119	4	3	4'-10"	384	4'-10"	384
S4	51	4	4	5'-10"	199	5'-10"	199
S5	68	8	5	5'-11"	1074	--	--
REINFORCING STEEL					3085 LBS.		2011 LBS.
7000 P.S.I. CONCRETE					15.2 CU. YDS.		15.2 CU. YDS.
0.6" Ø L.R. STRANDS				NO.	26	NO.	26

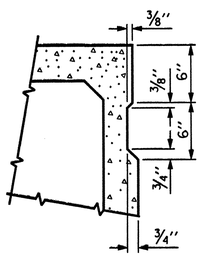

SHEAR KEY DETAIL

NOTE: OMIT SHEAR KEY ON OUTSIDE FACE OF EXTERIOR BOX BEAMS.

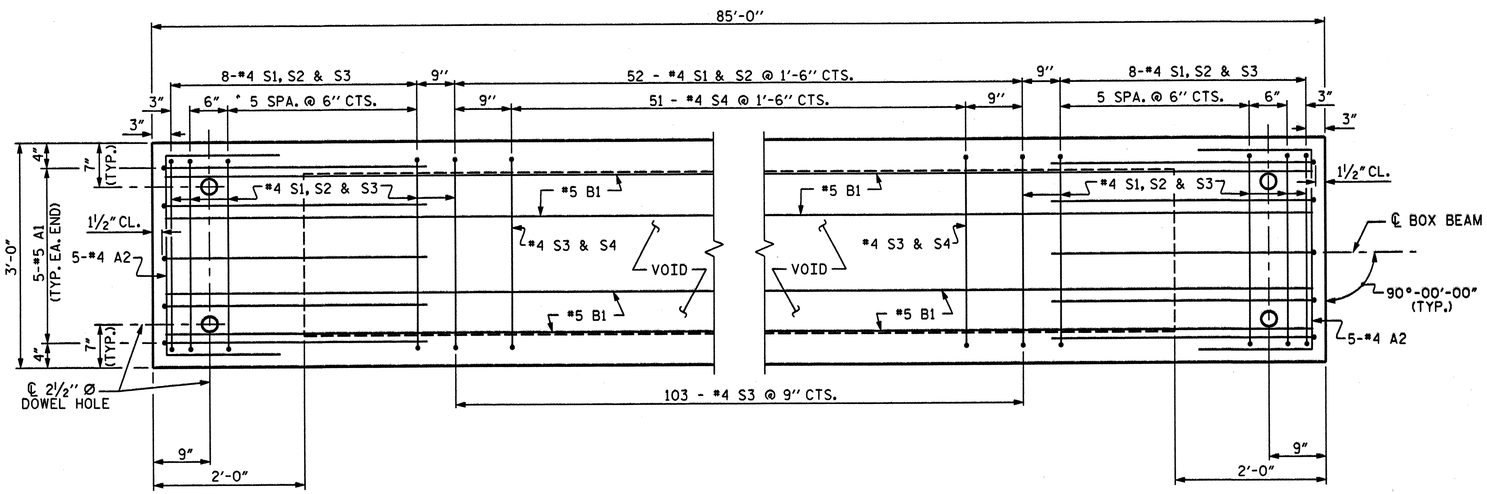

PLAN OF BOX BEAM

INTERIOR UNIT SHOWN, EXTERIOR UNIT SIMILAR.
FOR LOCATION OF #8 S5 BAR IN EXTERIOR UNIT SEE "PRESTRESSED CONCRETE BOX BEAM 85' SPAN" SHEET.
FOR LOCATION OF DIAPHRAGMS, SEE "PRESTRESSED CONCRETE BOX BEAM 85' SPAN" SHEET.
FOR REINFORCING STEEL IN DIAPHRAGMS, SEE DIAPHRAGM DETAILS.

WBS NO. 37661

FRANKLIN COUNTY

STATION: 13+45.42 -L-

REPLACES BRIDGE NO. 42 SHEET 1 OF 3

NORTH CAROLINA PROFESSIONAL SEAL 19831 ENGINEER DAVID L. SIMPSON, JR.
5-30-06

PLANS PREPARED BY:

SIMPSON ENGINEERS & ASSOCIATES
5520 Dillard Drive
Suite 120
Cary, NC 27518
(919) 852-0468
(919) 852-0598 (Fax)
www.simpsonengr.com

STATE OF NORTH CAROLINA
DEPARTMENT OF TRANSPORTATION
RALEIGH

3'-0" X 2'-9" PRESTRESSED CONCRETE BOX BEAM UNIT 85' SPAN

36' CLEAR ROADWAY - 90° SKEW

REVISIONS							
NO.	BY:	DATE:	NO.	BY:	DATE:	SHEET NO.	22
1			3			TOTAL SHEETS	62
2			4				

DRAWN BY : R. SEALEY DATE : 5/06
CHECKED BY : M. AVERETTE DATE : 5/06

5/30/2006 3:37:33 PM gr:\bmu\franklin42\drawings\ncma5018b_sd_bbd1_01.dgn

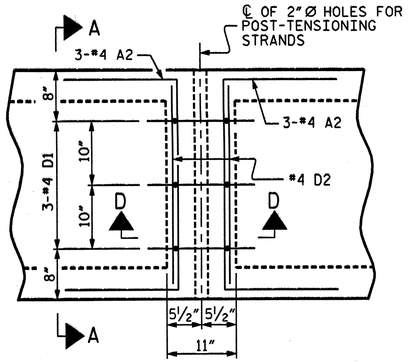

PLAN

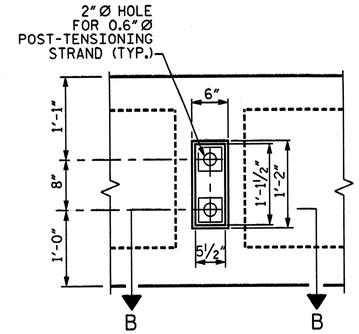

VIEW D-D

SHOWING ELEVATION VIEW OF GROUTED RECESS

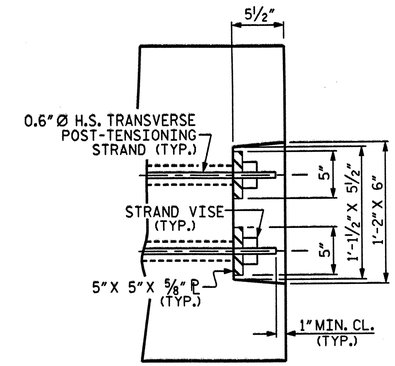

DETAIL "C"

THE ANCHOR PLATE SHALL BE GALVANIZED

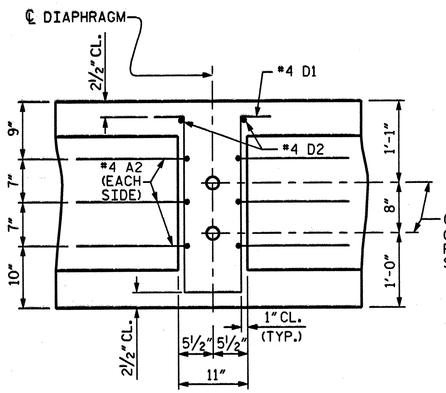

SECTION D-D

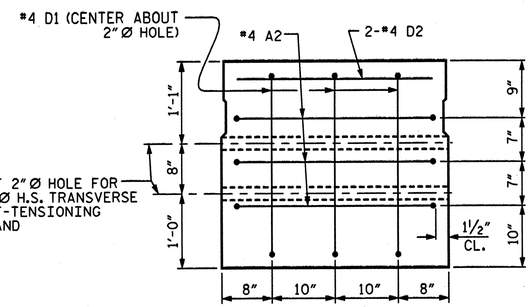

SECTION A-A

VOIDS NOT SHOWN

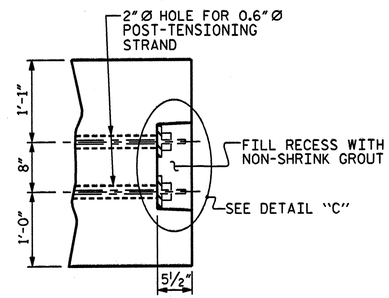

PART SECTION AT RECESS

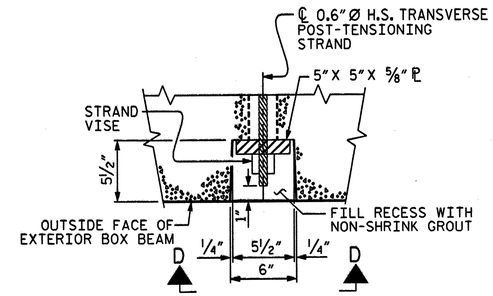

SECTION B-B

SHOWING PLAN VIEW OF GROUTED RECESS

DOUBLE DIAPHRAGM DETAILS FOR 33" BOX BEAM

#4 "S" BARS NOT SHOWN. #4 "S" BARS MAY BE SHIFTED SLIGHTLY TO CLEAR 2" Ø HOLE.

DOUBLE GROUTED RECESS AT END OF POST-TENSIONED STRANDS OF EXTERIOR 33" BOX BEAM

WBS NO. 37661

FRANKLIN COUNTY

STATION: 13+45.42 -L-

REPLACES BRIDGE NO. 42 SHEET 2 OF 3

NORTH CAROLINA PROFESSIONAL SEAL 19831 ENGINEER DAVID B. SIMPSON, JR.

5-30-06

PLANS PREPARED BY:

SIMPSON ENGINEERS & ASSOCIATES

5520 Dillard Drive
Suite 120
Cary, NC 27518
(919) 852-0468
(919) 852-0598 (Fax)
www.simpsonengr.com

STATE OF NORTH CAROLINA
DEPARTMENT OF TRANSPORTATION
RALEIGH

3'-0" X 2'-9"
PRESTRESSED CONCRETE
BOX BEAM UNIT
85' SPAN
36' CLEAR ROADWAY - 90° SKEW

REVISIONS						SHEET NO.
NO.	BY:	DATE:	NO.	BY:	DATE:	23
1			3			TOTAL SHEETS
2			4			62

DRAWN BY : R. SEALEY DATE : 5/06
CHECKED BY : M. AVERETTE DATE : 5/06

5/30/2006 3:37:32 PM g:\bmu\franklin42\drawings\ncma5018b_sd_bbd2_01.dgn

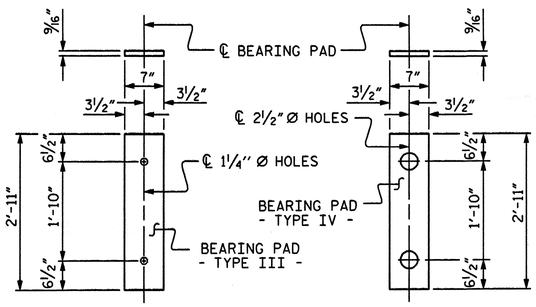

FIXED END
(TYPE III - 13 REQ'D)

EXPANSION END
(TYPE IV - 13 REQ'D)

ELASTOMERIC BEARING DETAILS

BOX BEAM UNITS REQUIRED			
	NUMBER	LENGTH	TOTAL LENGTH
SPAN B	13	85'-0"	1105'-0"
TOTAL	13	———	1105'-0"

GRADE 270 STRANDS	
	0.6" Ø L.R.
AREA (SQUARE INCHES)	0.217
ULTIMATE STRENGTH (LBS. PER STRAND)	58,600
APPLIED PRESTRESS (LBS. PER STRAND)	43,950

DEAD LOAD DEFLECTION AND CAMBER	
	3'-0" x 2'-9"
	0.6" Ø L.R. STRAND
	SPAN "B"
CAMBER (BEAM ALONE IN PLACE)	3⅛" (UP)
DEFLECTION DUE TO SUPERIMPOSED DEAD LOAD**	1/16" (DOWN)
FINAL CAMBER	2 7/16" (UP)

** INCLUDES FUTURE WEARING SURFACE

BOX BEAM NOTES

ALL PRESTRESSING STRANDS SHALL BE 7-WIRE LOW RELAXATION GRADE 270 STRANDS AND SHALL CONFORM TO AASHTO M203 EXCEPT FOR SAMPLING REQUIREMENTS WHICH SHALL BE IN ACCORDANCE WITH THE STANDARD SPECIFICATIONS.

ALL REINFORCING STEEL CAST WITH THE BOX BEAM SECTIONS SHALL BE GRADE 60 AND SHALL BE INCLUDED IN THE UNIT PRICE BID FOR PRESTRESSED CONCRETE BOX BEAMS.

RECESSES FOR TRANSVERSE STRANDS SHALL BE GROUTED AFTER THE TENSIONING OF THE STRANDS.

THE 2½" Ø DOWEL HOLES AT FIXED ENDS OF BOX BEAM SECTIONS SHALL BE FILLED WITH NON-SHRINK GROUT. THE 2½" Ø DOWEL HOLES AT EXPANSION ENDS OF SLAB SECTIONS SHALL BE FILLED WITH JOINT SEALER MATERIAL TO 1½" ABOVE THE TOP OF DOWELS AND THEN FILLED WITH GROUT.

THE JOINT SEALER MATERIAL SHALL CONFORM TO THE REQUIREMENTS OF TYPE SL LOW MODULUS SILICONE SEALANT.

WHEN BOX BEAMS ARE CAST, A POSITIVE HOLD-DOWN SYSTEM SHALL BE EMPLOYED TO PREVENT VOIDS FROM RISING OR MOVING SIDEWAYS. THIS SYSTEM SHALL BE DESIGNED TO BE LEFT IN PLACE UNTIL THE CONCRETE HAS REACHED RELEASE STRENGTH. AT LEAST THREE WEEKS PRIOR TO CASTING BOX BEAMS, THE CONTRACTOR SHALL SUBMIT TO THE ENGINEER FOR REVIEW AND COMMENT, DETAILED DRAWINGS OF THE PROPOSED HOLD-DOWN SYSTEM. IN ADDITION TO STRUCTURAL DETAILS, LOCATION AND SPACING OF THE HOLD-DOWNS SHALL BE INDICATED.

PRESTRESSING STRANDS SHALL BE CUT FLUSH WITH THE BOX BEAM UNIT ENDS.

APPLY EPOXY PROTECTIVE COATING TO BOX BEAM UNIT ENDS. FOR EPOXY PROTECTIVE COATING, SEE SPECIAL PROVISIONS.

FOR PRESTRESSED CONCRETE BOX BEAMS, SEE SPECIAL PROVISIONS.

THE LOCATION OF THE VOID DRAINS MAY BE SHIFTED SLIGHTLY WHERE NECESSARY TO CLEAR PRESTRESSING STRANDS OR TRANSVERSE REINFORCING STEEL.

CONCRETE = f'c - 7000psi 85' SPAN ONLY (MIN. COMP. STRENGTH @ 28 DAYS).
f'ci - 5600psi 85' SPAN ONLY (MIN. COMP. STRENGTH @ TRANSFER OF STRESSING FORCE).

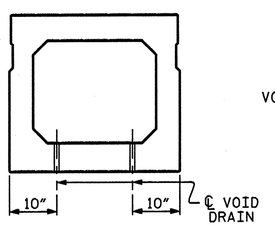

SECTION B-B

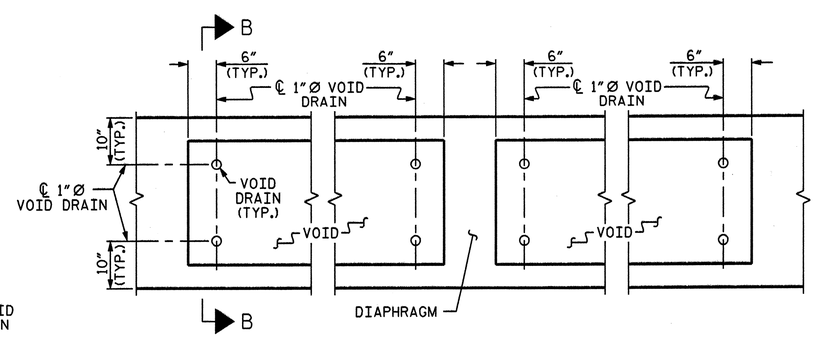

PART PLAN

VOID DRAIN DETAILS

(DIMENSIONS SHOWN ARE TYPICAL FOR EACH VOID)

WBS NO. 37661
FRANKLIN COUNTY
STATION: 13+45.42 -L-

REPLACES BRIDGE NO. 42 SHEET 3 OF 3

STATE OF NORTH CAROLINA
DEPARTMENT OF TRANSPORTATION
RALEIGH

3'-0" X 2'-9"
PRESTRESSED CONCRETE
BOX BEAM UNIT
85' SPAN
36' CLEAR ROADWAY - 90° SKEW

NORTH CAROLINA PROFESSIONAL SEAL 19831 ENGINEER DAVID B. SIMPSON, JR.
5-30-06

PLANS PREPARED BY:
SIMPSON ENGINEERS & ASSOCIATES
5520 Dillard Drive
Suite 120
Cary, NC 27518
(919) 852-0468
(919) 852-0598 (Fax)
www.simpsonengr.com

REVISIONS						SHEET NO.
NO.	BY:	DATE:	NO.	BY:	DATE:	24
1			3			TOTAL SHEETS
2			4			62

DRAWN BY : R. SEALEY DATE : 5/06
CHECKED BY : M. AVERETTE DATE : 5/06

5/30/2006 3:37:32 PM g:\bmu\franklin42\drawings\ncmd5018b_sd_bbd3_01.dgn

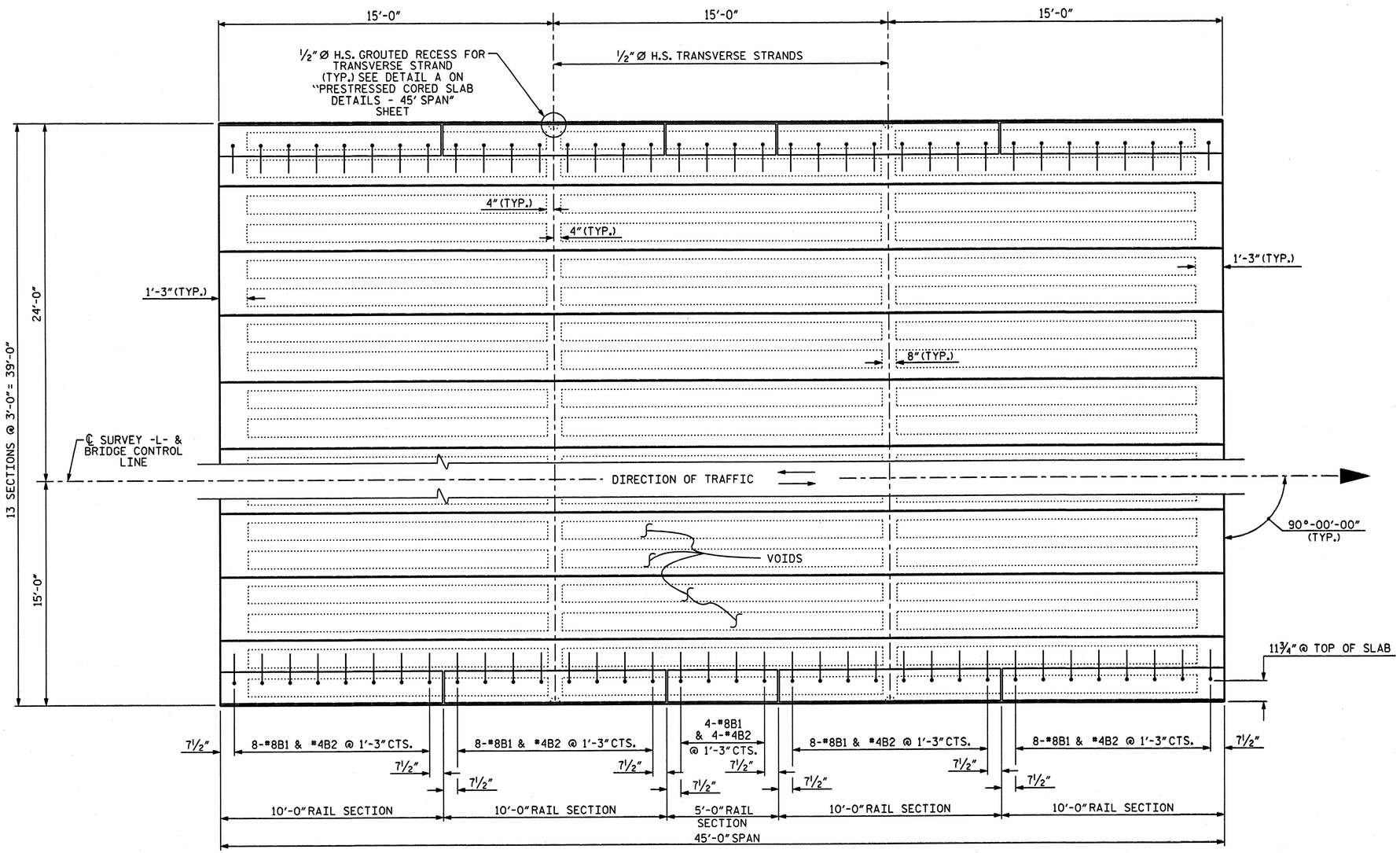

PLAN OF SPAN

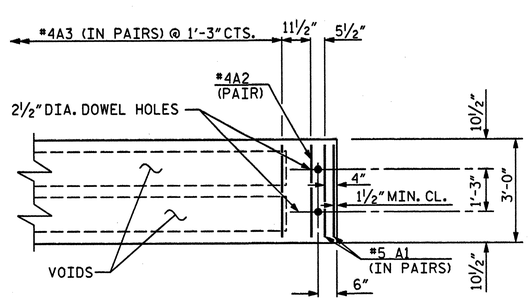

PART PLAN - SLAB SECTION

WBS NO. 37661

FRANKLIN COUNTY

STATION: 13+45.42 -L-

REPLACES BRIDGE NO. 42

STATE OF NORTH CAROLINA
DEPARTMENT OF TRANSPORTATION
RALEIGH

STANDARD

PRESTRESSED CORED SLAB
45' SPAN

36' CLEAR ROADWAY - 90° SKEW

NORTH CAROLINA PROFESSIONAL SEAL 19831 ENGINEER DAVID B. SIMPSON, JR.
5-30-06

PLANS PREPARED BY:

SIMPSON ENGINEERS & ASSOCIATES
5520 Dillard Drive
Suite 120
Cary, NC 27518
(919) 852-0468
(919) 852-0598 (Fax)
www.simpsonengr.com

REVISIONS						
NO.	BY:	DATE:	NO.	BY:	DATE:	
1			3			
2			4			

SHEET NO. 25
TOTAL SHEETS 62

DRAWN BY : R. SEALEY DATE : 5/06
CHECKED BY : M. AVERETTE DATE : 5/06

5/30/2006 3:37:32 PM g:\bmu\franklin42\drawings\ncma5018b_sd_csl_01.dgn

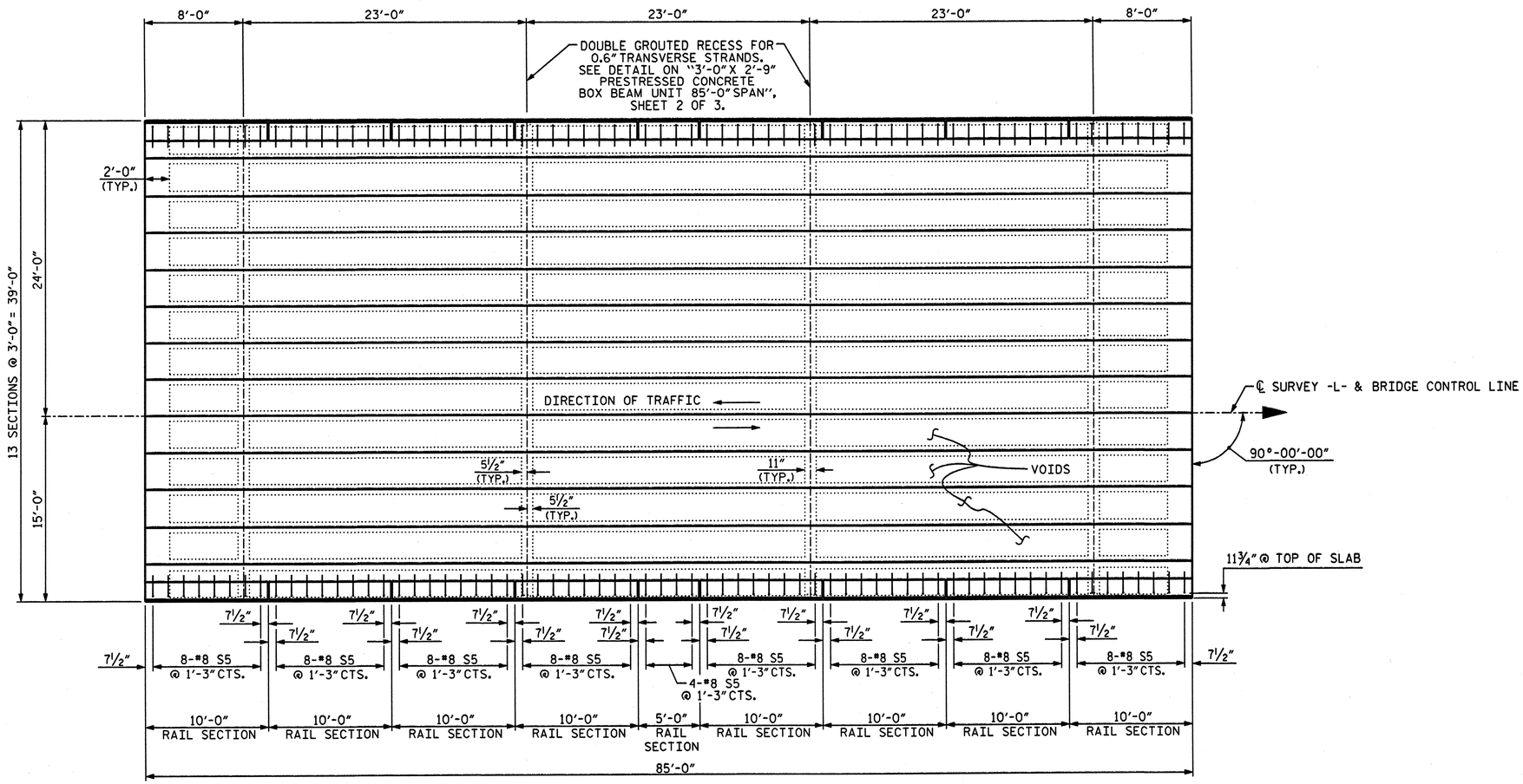

PLAN OF SPAN

WBS NO. 37661

FRANKLIN COUNTY

STATION: 13+45.42 -L-

REPLACES BRIDGE NO. 42

STATE OF NORTH CAROLINA
DEPARTMENT OF TRANSPORTATION
RALEIGH

STANDARD
PRESTRESSED CONCRETE
BOX BEAM
85' SPAN
36' CLEAR ROADWAY - 90° SKEW

NORTH CAROLINA PROFESSIONAL SEAL 19831 ENGINEER DAVID B. SIMPSON, JR.
5-30-06

PLANS PREPARED BY:

SIMPSON ENGINEERS & ASSOCIATES
5520 Dillard Drive
Suite 120
Cary, NC 27518
(919) 852-0468
(919) 852-0598 (Fax)
www.simpsonengr.com

REVISIONS						
NO.	BY:	DATE:	NO.	BY:	DATE:	
1			3			
2			4			

SHEET NO. 26
TOTAL SHEETS 62

DRAWN BY : R. SEALEY DATE : 5/06
CHECKED BY : M. AVERETTE DATE : 5/06

5/30/2006 3:37:32 PM g:\bmu\franklin42\drawings\ncmd5018b_sd_bb01_01.dgn

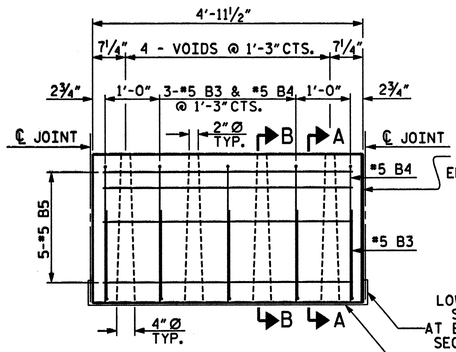

TYPICAL 5'-0" PRECAST UNIT

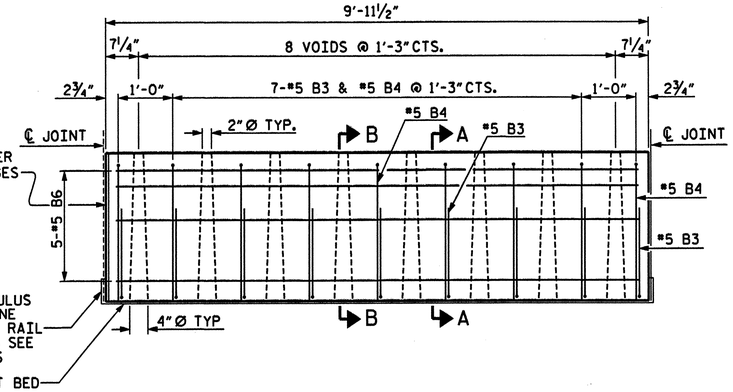

TYPICAL 10'-0" PRECAST UNIT

NOTES

EACH PRECAST RAIL UNIT SHALL BE CAST WITH CLASS AA CONCRETE.

RAIL TO BE FLUSH WITH CORED SLAB OR BOX BEAM UNITS AT EACH END OF SPAN.

EACH PRECAST RAIL UNIT SHALL BE SUPPLIED WITH LIFTING DEVICE(S). NO CABLES ARE TO BE WRAPPED AROUND THE RAIL UNITS FOR LIFTING.

THE EXPANSION JOINT SEALER SHALL BE LOW MODULUS SILICONE SEALANT. SEE SECTION 1028-4 OF THE STANDARD SPECIFICATIONS.

CONCRETE CHAMFERS:
UNLESS OTHERWISE NOTED ON THE PLANS, ALL EXPOSED CORNERS ON STRUCTURES SHALL BE CHAMFERED ¾" WITH THE FOLLOWING EXCEPTIONS: TOP CORNERS OF CURBS MAY BE ROUNDED TO 1½" RADIUS WHICH IS BUILT INTO CURB FORMS; CORNERS OF TRANSVERSE FLOOR EXPANSION JOINTS SHALL BE ROUNDED WITH A ¼" FINISHING TOOL UNLESS OTHERWISE REQUIRED ON PLANS; AND CORNERS OF EXPANSION JOINTS IN THE ROADWAY FACES AND TOPS OF CURBS AND SIDEWALKS SHALL BE ROUNDED TO A ¼" RADIUS WITH A FINISHING STONE OR TOOL UNLESS OTHERWISE ON PLANS.

GROUT SHALL BE 5" ABOVE GROUT BED BETWEEN RAIL SECTIONS EXCEPT AT BENTS WHERE LOW MODULUS SILICONE SHALL BE SUBSTITUTED IN PLACE OF GROUT.

BILL OF MATERIAL FOR ONE 5'-0" RAIL SECTION

BAR	NO.	SIZE	TYPE	LENGTH	WEIGHT
B3	5	#5	1	2'-8"	14
B4	5	#5	2	4'-11"	26
B5	5	#5	STR.	4'-7"	24
REINFORCING STEEL LBS. =					64
CLASS AA CONCRETE CU. YDS. =					0.5

BILL OF MATERIAL FOR ONE 10'-0" RAIL SECTION

BAR	NO.	SIZE	TYPE	LENGTH	WEIGHT
B3	9	#5	1	2'-8"	25
B4	9	#5	2	4'-11"	46
B6	5	#5	STR.	9'-7"	50
REINFORCING STEEL LBS. =					121
CLASS AA CONCRETE CU. YDS. =					1.0

BAR TYPES

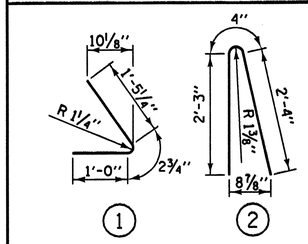

ALL BAR DIMENSIONS ARE OUT TO OUT

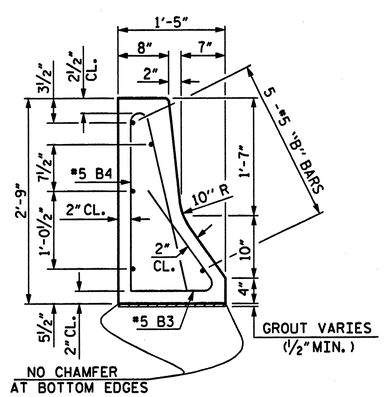

SECTION A-A

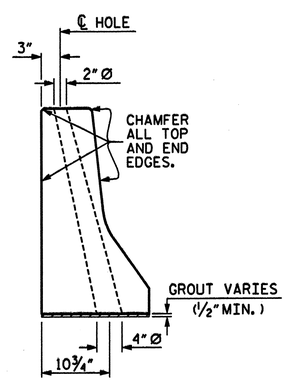

SECTION B-B

WBS NO. 37661

FRANKLIN COUNTY

STATION: 13+45.42 -L-

REPLACES BRIDGE NO. 42

STATE OF NORTH CAROLINA
DEPARTMENT OF TRANSPORTATION
RALEIGH

PRECAST CONCRETE BARRIER RAIL SECTIONS 45' & 85' SPAN

36' CLEAR ROADWAY - 90° SKEW

NORTH CAROLINA PROFESSIONAL SEAL 19831 ENGINEER DAVID G. SIMPSON, JR.
5-30-06

PLANS PREPARED BY:

SIMPSON ENGINEERS & ASSOCIATES
5520 Dillard Drive
Suite 120
Cary, NC 27518
(919) 852-0468
(919) 852-0598 (Fax)
www.simpsonengr.com

REVISIONS								SHEET NO.
NO.	BY:	DATE:	NO.	BY:	DATE:			27
1			3					TOTAL SHEETS
2			4					62

DRAWN BY : R. SEALEY DATE : 5/06
CHECKED BY : M. AVERETTE DATE : 5/06

5/30/2006 3:37:32 PM g:\bmu\franklin42\drawings\ncma5018b_sd_br_01.dgn

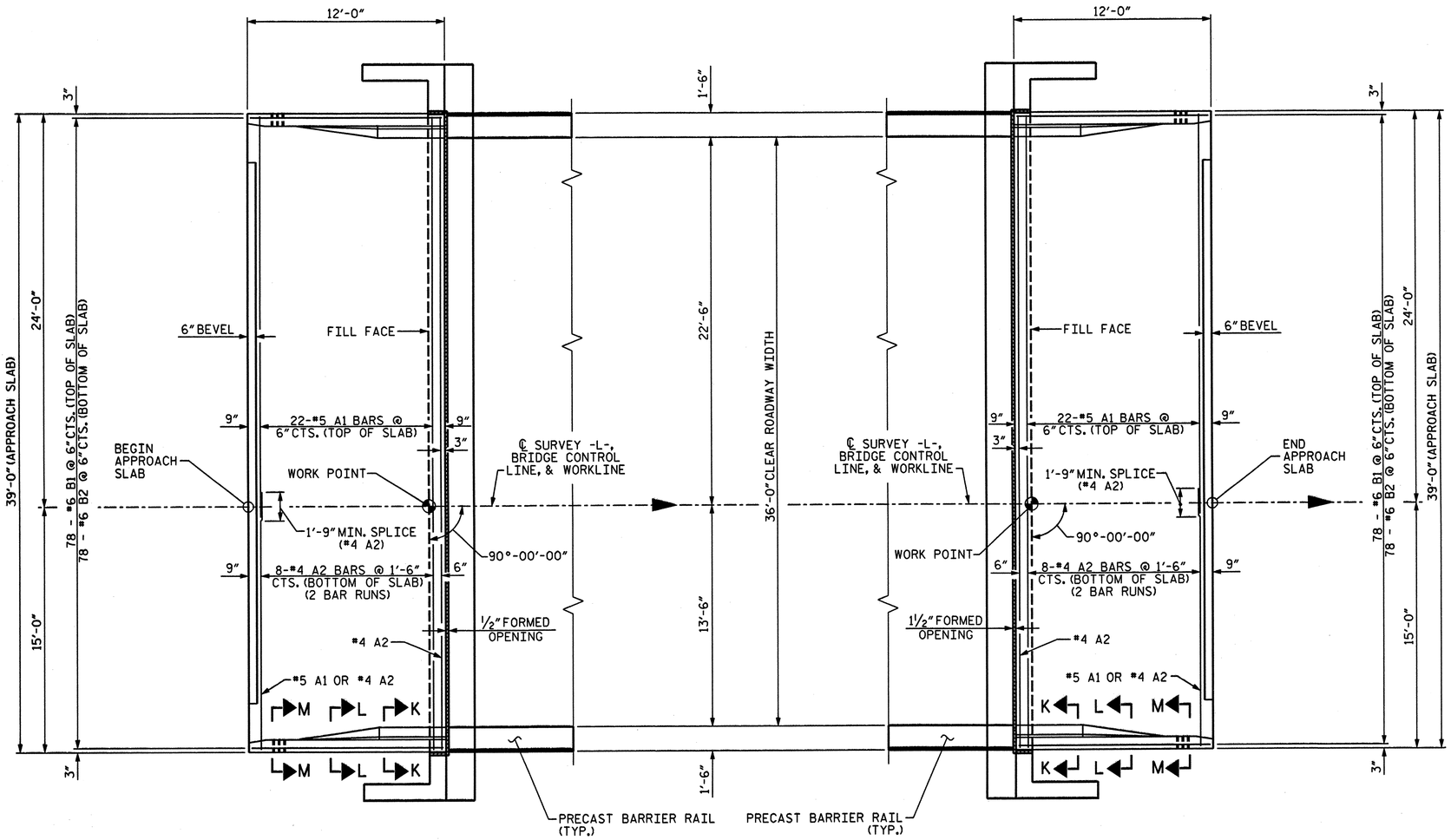

PLAN OF APPROACH SLAB #1

FOR SECTIONS THRU APPROACH SLAB, SEE SHEET 2 OF 3.

PLAN OF APPROACH SLAB #2

FOR SECTIONS THRU APPROACH SLAB, SEE SHEET 2 OF 3.

BILL OF MATERIAL

END BENT #1

BAR	NO.	SIZE	TYPE	LENGTH	WEIGHT
*A1	22	5	STR	38'-8"	887
A2	18	4	STR	20'-3"	243
*B1	78	6	STR	10'-9"	1259
B2	78	6	STR	11'-8"	1367
*B3	14	5	STR	11'-8"	170
*B4	2	5	3	6'-5"	13
*S1	48	5	STR	3'-3"	163
*S2	48	5	1	4'-1"	204
*S3	20	5	2	2'-3"	47

REINFORCING STEEL 1610 LBS.
* EPOXY COATED
REINFORCING STEEL 2743 LBS.

CLASS "A" CONCRETE BREAKDOWN
POUR #1 SLAB 21.7 CU. YDS.
POUR #2 RAIL 2.2 CU. YDS.
TOTAL 23.9 CU. YDS.

BILL OF MATERIAL

END BENT #2

BAR	NO.	SIZE	TYPE	LENGTH	WEIGHT
*A1	22	5	STR	38'-8"	887
A2	18	4	STR	20'-3"	243
*B1	78	6	STR	10'-9"	1259
B2	78	6	STR	11'-8"	1367
*B3	14	5	STR	11'-8"	170
*B4	2	5	3	6'-5"	13
*S1	48	5	STR	3'-3"	163
*S2	48	5	1	4'-1"	204
*S3	20	5	2	2'-3"	47

REINFORCING STEEL 1610 LBS.
* EPOXY COATED
REINFORCING STEEL 2743 LBS.

CLASS "A" CONCRETE BREAKDOWN
POUR #1 SLAB 17.8 CU. YDS.
POUR #2 RAIL 2.2 CU. YDS.
TOTAL 20.0 CU. YDS.

BAR TYPES

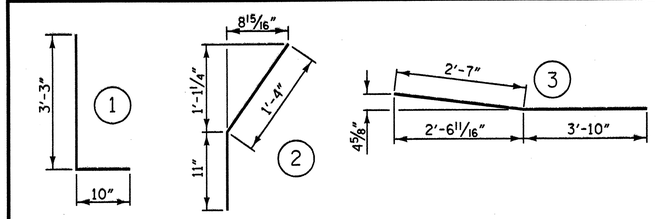

ALL BAR DIMENSIONS ARE OUT TO OUT

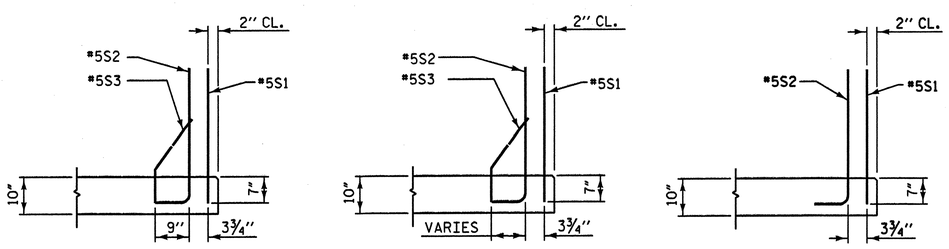

SECTION K-K

SECTION L-L

SECTION M-M

WBS NO. 37661

FRANKLIN COUNTY

STATION: 13+45.42 -L-

REPLACES BRIDGE NO. 42 SHEET 1 OF 3

STATE OF NORTH CAROLINA
DEPARTMENT OF TRANSPORTATION
RALEIGH

APPROACH SLAB

36' CLEAR ROADWAY - 90° SKEW

NORTH CAROLINA PROFESSIONAL SEAL 19831 ENGINEER DAVID B. SIMPSON, JR.
5-30-06

PLANS PREPARED BY:

SIMPSON ENGINEERS & ASSOCIATES
5520 Dillard Drive
Suite 120
Cary, NC 27518
(919) 852-0468
(919) 852-0598 (Fax)
www.simpsonengr.com

REVISIONS							
NO.	BY:	DATE:	NO.	BY:	DATE:	SHEET NO.	28
1			3			TOTAL SHEETS	62
2			4				

DRAWN BY : R. SEALEY DATE : 5/06
CHECKED BY : M. AVERETTE DATE : 5/06

5/30/2006 3:37:32 PM g:\bmu\franklin42\drawings\ncmd5018b_sd_as1_01.dgn

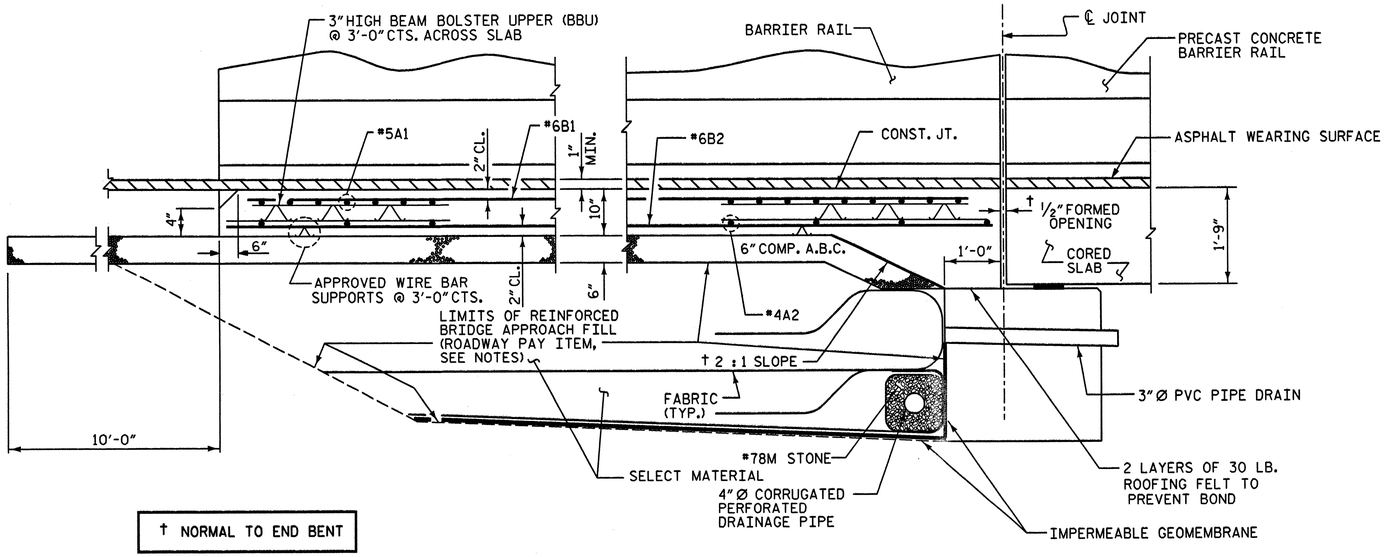

SECTION THRU SLAB @ END BENT #1

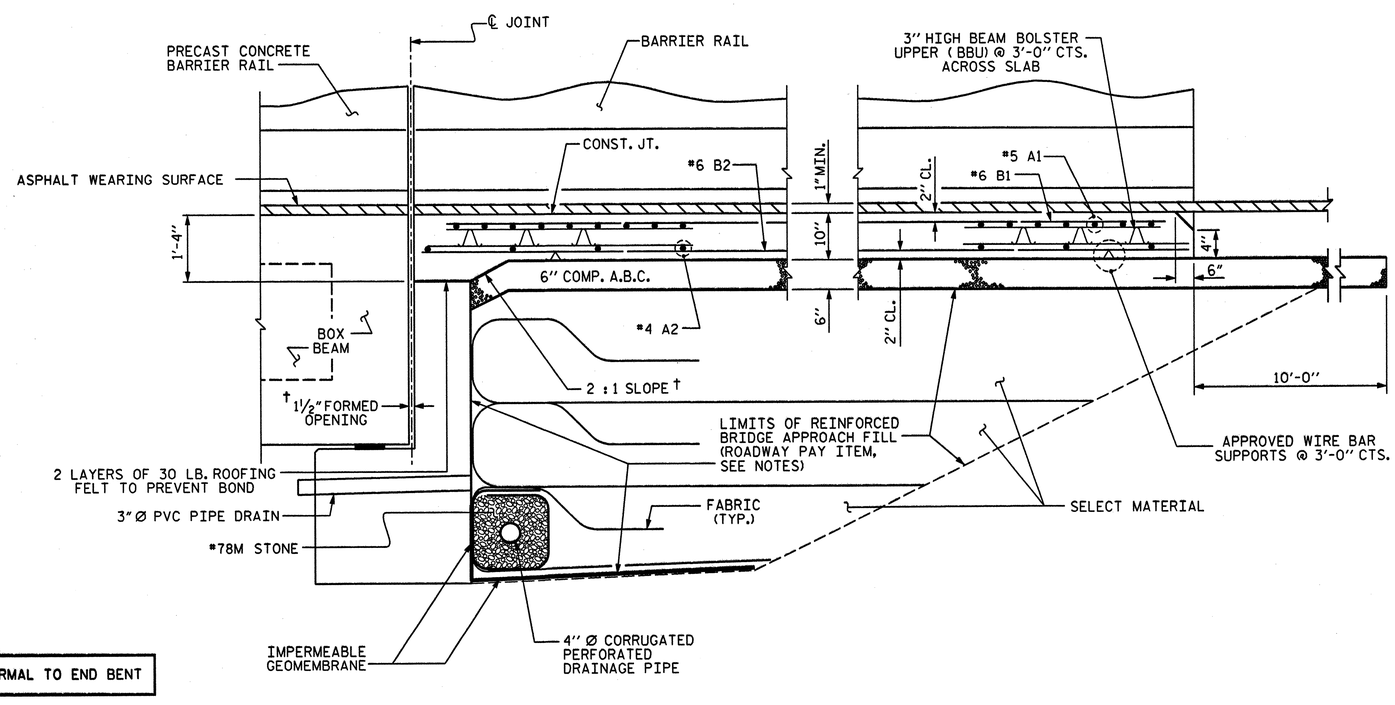

SECTION THRU SLAB @ END BENT #2

NOTES

THE COST OF THE CURB ON THE APPROACH SLAB SHALL BE INCLUDED IN THE LUMP SUM CONTRACT PRICE BID FOR BRIDGE APPROACH SLABS.

THE COST OF THE REINFORCED BRIDGE APPROACH FILL INCLUDING FABRIC, IMPERMEABLE GEOMEMBRANE, 4" Ø DRAINAGE PIPE, #78M STONE, AND SELECT MATERIAL, SHALL BE INCLUDED IN THE LUMP SUM CONTRACT BID PRICE FOR BRIDGE APPROACH SLABS.

FOR REINFORCED BRIDGE APPROACH FILL INCLUDING FABRIC, IMPERMEABLE GEOMEMBRANE, 4" Ø DRAINAGE PIPE, #78M STONE, AND SELECT MATERIAL, SEE STANDARD DRAWING 422.10.

TEMPORARY DRAINAGE AND TEMPORARY BERM AND SLOPE DRAINS WILL BE PAID FOR UNDER THE LUMP SUM PRICE FOR BRIDGE APPROACH SLAB.

AREA BETWEEN THE WINGWALL AND APPROACH SLAB SHALL BE GRADED TO DRAIN THE WATER AWAY FROM THE FILL FACE OF THE BRIDGE AND SHALL BE PAVED.

THE 6" COMP. A.B.C. SHALL EXTEND 10'-0" BEYOND THE END OF THE APPROACH SLAB AND 1'-0" OUTSIDE OF EACH EDGE OF SLAB.

THE CONTRACTOR MAY USE 4" TYPE B-25.0B ASPHALT CONCRETE BASE COURSE IN LIEU OF 6" COMP. A.B.C. IF THIS OPTION IS USED, THE BASE COURSE SHALL EXTEND 1'-0" BEYOND THE END OF THE APPROACH SLAB AND THE WIDTH SHALL BE THE SAME AS THAT OF THE APPROACH SLAB.

THE CONTRACTOR MAY USE 5" CLASS "A" CONCRETE BASE IN LIEU OF 6" COMP. A.B.C. IF THIS OPTION IS USED, THE CONCRETE BASE SHALL EXTEND 1'-0" BEYOND THE END OF THE APPROACH SLAB AND THE WIDTH SHALL BE THE SAME AS THAT OF THE APPROACH SLAB. THE CONCRETE SHALL BE FINISHED TO A SMOOTH SURFACE AND A LAYER OF 30 LB ROOFING FELT SHALL BE PLACED BETWEEN THE CONCRETE BASE AND THE APPROACH SLAB TO PREVENT BOND. THE APPROACH SLAB SHALL NOT BE CAST UNTIL THE CONCRETE BASE HAS REACHED AN AGE OF THREE CURING DAYS.

FOR JOINT DETAILS, SEE "SUPERSTRUCTURE DETAILS" SHEETS.

THE JOINT AT THE END BENT SHALL BE SEALED AS SOON AS PRACTICAL AFTER THE CONSTRUCTION OF THE APPROACH SLABS.

APPROACH SLAB GROOVING IS NOT REQUIRED.

WBS NO. 37661

FRANKLIN COUNTY

STATION: 13+45.42 -L-

REPLACES BRIDGE NO. 42 SHEET 2 OF 3

STATE OF NORTH CAROLINA
DEPARTMENT OF TRANSPORTATION
RALEIGH

APPROACH SLAB

36' CLEAR ROADWAY - 90° SKEW

NORTH CAROLINA PROFESSIONAL SEAL 19831 ENGINEER DAVID B. SIMPSON, JR.
5-30-06

PLANS PREPARED BY:

SIMPSON ENGINEERS & ASSOCIATES
5520 Dillard Drive
Suite 120
Cary, NC 27518
(919) 852-0468
(919) 852-0598 (Fax)
www.simpsonengr.com

REVISIONS						
NO.	BY:	DATE:	NO.	BY:	DATE:	
1			3			
2			4			

SHEET NO. 29

TOTAL SHEETS 62

DRAWN BY : R. SEALEY DATE : 5/06
CHECKED BY : M. AVERETTE DATE : 5/06

5/30/2006 3:37:31 PM g:\bmu\franklin42\drawings\ncmd5018b_sd_ds2_01.dgn

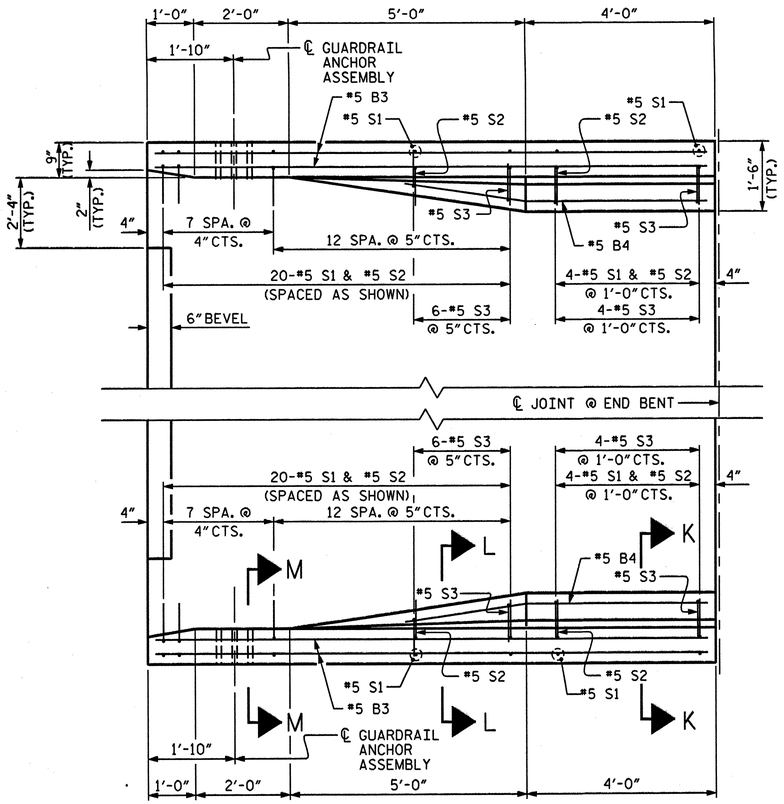

PLAN

BEGIN APPROACH SLAB SHOWN, END APPROACH SLAB SIMILAR

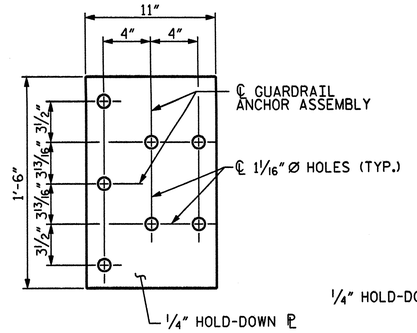

PLAN

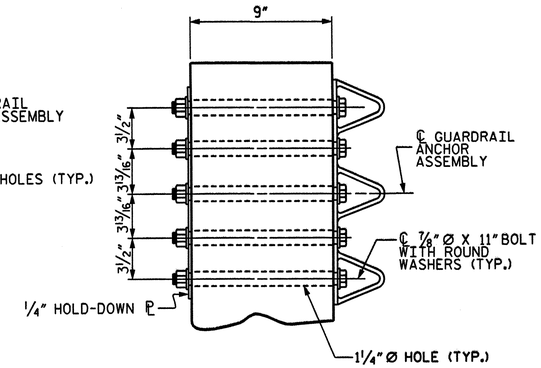

SECTION E-E

GUARDRAIL ANCHOR ASSEMBLY DETAILS

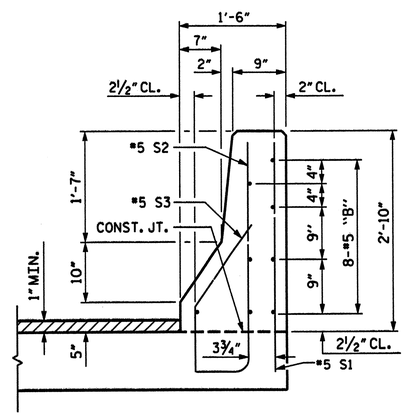

SECTION K-K

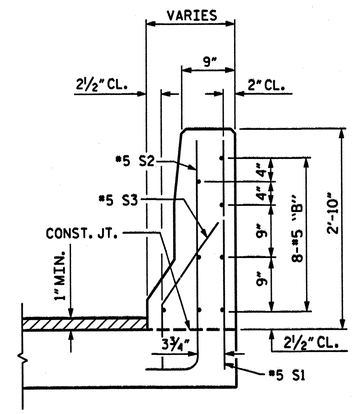

SECTION L-L

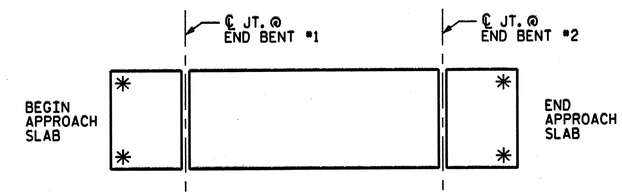

SKETCH SHOWING POINTS OF ATTACHMENT

✱ INDICATES POINTS OF ATTACHMENT

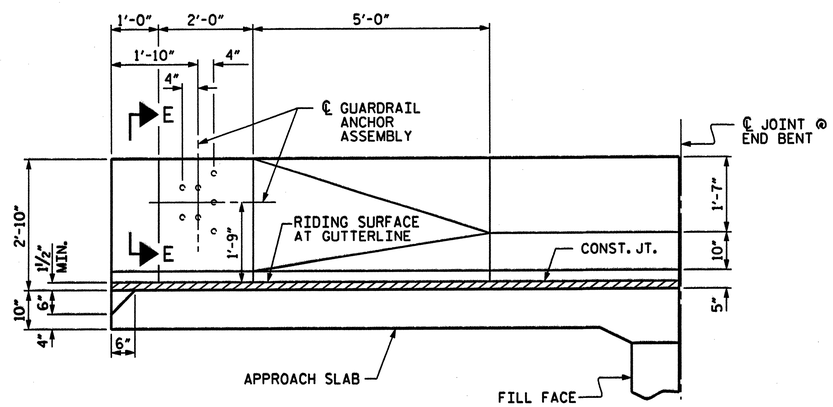

ELEVATION

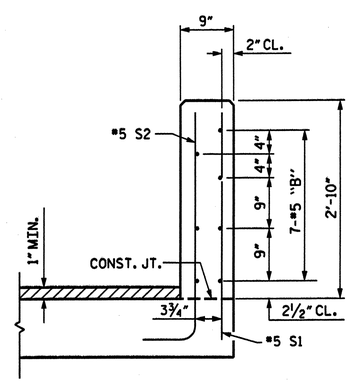

SECTION M-M

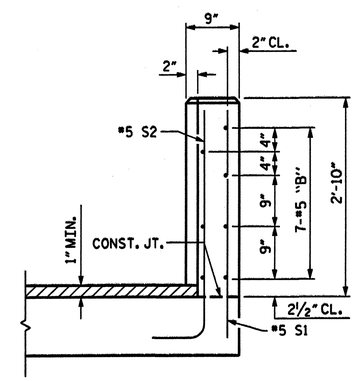

END VIEW

NOTES

THE GUARDRAIL ANCHOR ASSEMBLY SHALL CONSIST OF A 1/4" HOLD DOWN PLATE AND 7 - 7/8" Ø BOLTS WITH NUTS AND WASHERS.

THE HOLD-DOWN PLATE SHALL CONFORM TO AASHTO M270 GRADE 36. AFTER FABRICATION, THE HOLD-DOWN PLATE SHALL BE HOT-DIP GALVANIZED IN ACCORDANCE WITH AASHTO M111.

BOLTS SHALL CONFORM TO THE REQUIREMENTS OF ASTM A307 AND NUTS SHALL CONFORM TO THE REQUIREMENTS OF AASHTO M291. BOLTS, NUTS AND WASHERS SHALL BE GALVANIZED. AT THE CONTRACTOR'S OPTION, STAINLESS STEEL BOLTS, NUTS AND WASHERS MAY BE USED AS AN ALTERNATE FOR THE 7/8" Ø GALVANIZED BOLTS, NUTS AND WASHERS. THEY SHALL CONFORM TO OR EXCEED THE MECHANICAL REQUIREMENTS OF ASTM A307. THE USE OF THIS ALTERNATE SHALL BE APPROVED BY THE ENGINEER.

AFTER INSTALLATION, THE EXPOSED THREAD OF THE BOLT SHALL BE BURRED WITH A SHARP POINTED TOOL.

THE COST OF THE GUARDRAIL ANCHOR ASSEMBLIES WITH BOLTS, NUTS AND WASHERS COMPLETE IN PLACE, SHALL BE INCLUDED IN THE LUMP SUM CONTRACT PRICE BID FOR BRIDGE APPROACH SLABS.

THE 1 1/4" Ø HOLES SHALL BE FORMED OR DRILLED WITH A CORE BIT. IMPACT TOOLS WILL NOT BE PERMITTED. ANY CONCRETE DAMAGED BY THIS WORK SHALL BE REPAIRED TO THE SATISFACTION OF THE ENGINEER.

WBS NO. 37661

FRANKLIN COUNTY

STATION: 13+45.42 -L-

REPLACES BRIDGE NO. 42 SHEET 3 OF 3

STATE OF NORTH CAROLINA
DEPARTMENT OF TRANSPORTATION
RALEIGH

APPROACH SLAB

36' CLEAR ROADWAY - 90° SKEW

NORTH CAROLINA PROFESSIONAL SEAL 19831 ENGINEER DAVID A. SIMPSON, JR.
5-30-06

PLANS PREPARED BY:

SIMPSON ENGINEERS & ASSOCIATES
5520 Dillard Drive
Suite 120
Cary, NC 27518
(919) 852-0468
(919) 852-0598 (Fax)
www.simpsonengr.com

REVISIONS								SHEET NO.
NO.	BY:	DATE:	NO.	BY:	DATE:			30
1			3					TOTAL SHEETS
2			4					62

DRAWN BY : R. SEALEY DATE : 5/06
CHECKED BY : M. AVERETTE DATE : 5/06

5/30/2006 3:37:31 PM g:\bmu\franklin42\drawings\ncma5018b_sd_as3_01.dgn

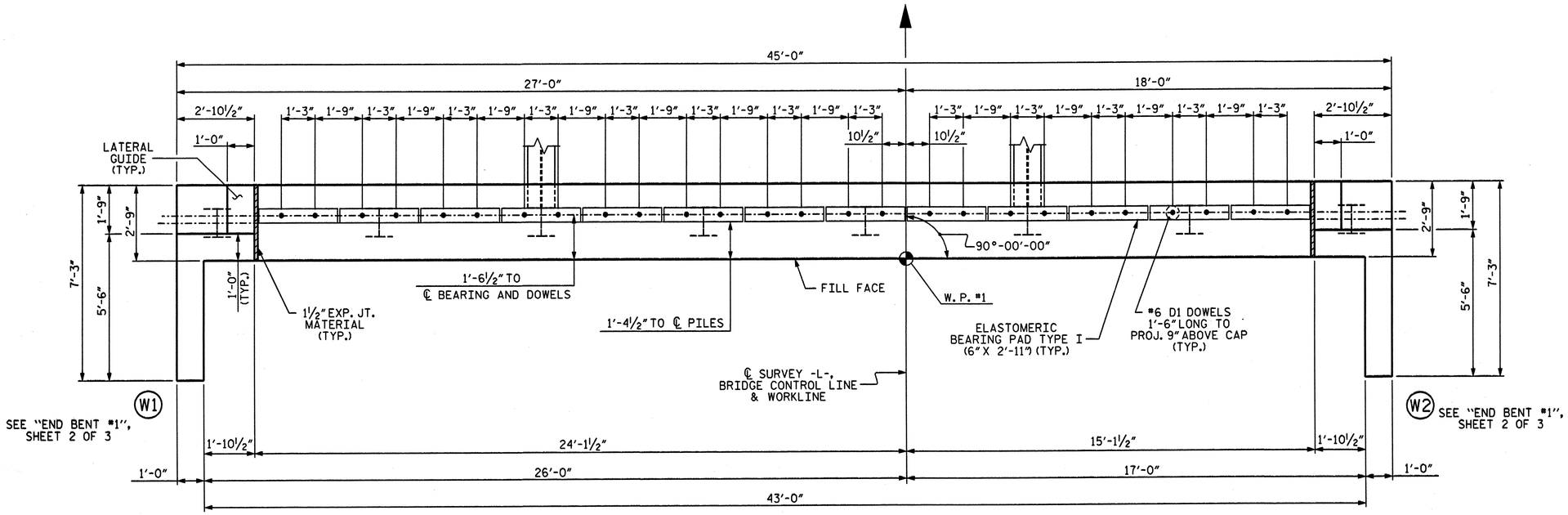

PLAN

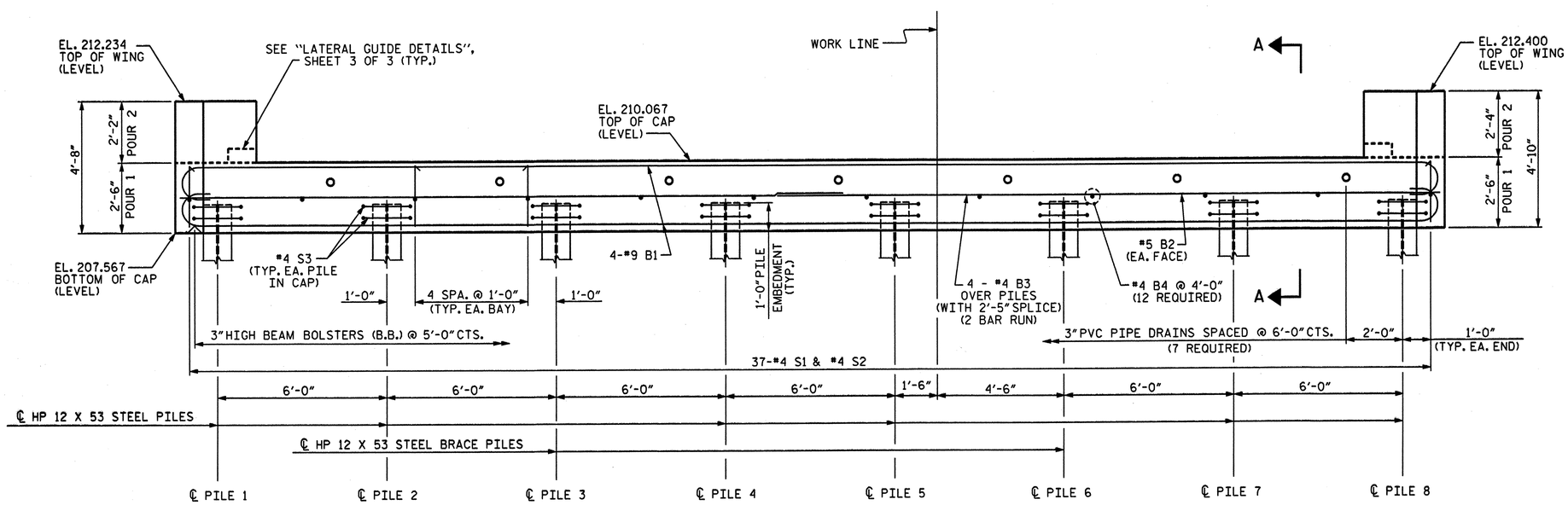

ELEVATION

NOTES

STIRRUPS IN CAP MAY BE SHIFTED AS NECESSARY TO CLEAR #6 D1 DOWELS.

PIPE DRAINS MAY BE SHIFTED SLIGHTLY AS NECESSARY TO CLEAR REINFORCING STEEL AND DOWELS.

WBS NO. 37661

FRANKLIN COUNTY

STATION: 13+45.42 -L-

REPLACES BRIDGE NO. 42 SHEET 1 OF 3

STATE OF NORTH CAROLINA
DEPARTMENT OF TRANSPORTATION
RALEIGH

SUBSTRUCTURE

END BENT #1

36' CLEAR ROADWAY - 90° SKEW

NORTH CAROLINA PROFESSIONAL SEAL 18831 ENGINEER DAVID B. SIMPSON, JR.
5-30-06

PLANS PREPARED BY:

SIMPSON ENGINEERS & ASSOCIATES
5520 Dillard Drive
Suite 120
Cary, NC 27518
(919) 852-0468
(919) 852-0598 (Fax)
www.simpsonengr.com

REVISIONS							
NO.	BY:	DATE:	NO.	BY:	DATE:	SHEET NO.	31
1			3			TOTAL SHEETS	62
2			4				

DRAWN BY : R. SEALEY DATE : 5/06
CHECKED BY : M. AVERETTE DATE : 5/06

5/30/2006 3:37:31 PM g:\bmu\franklin42\drawings\ncma5018b_sd_eb1a_01.dgn

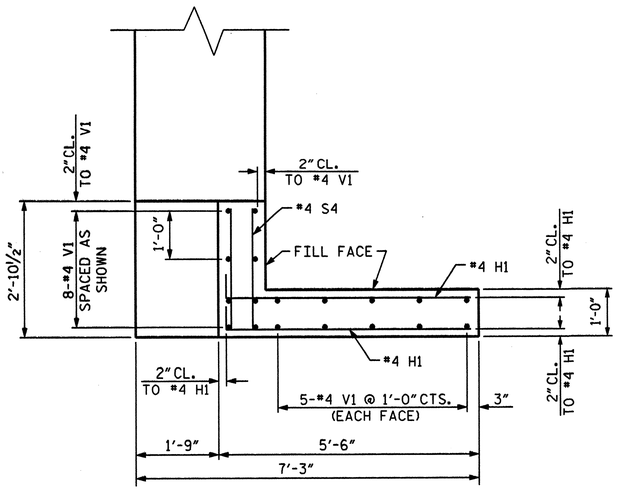

W1 PLAN OF LEFT WING

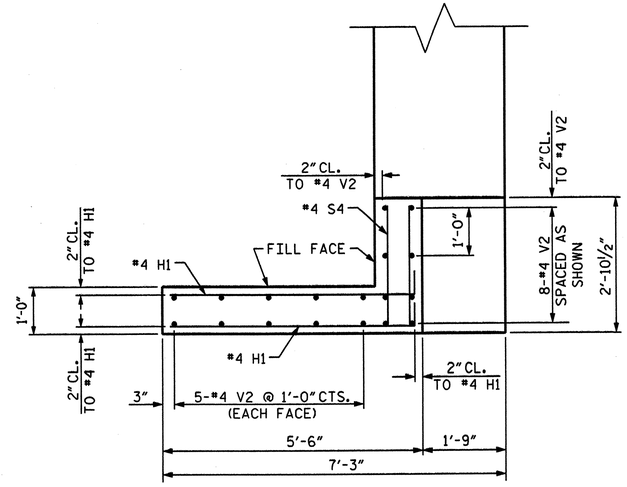

W2 PLAN OF RIGHT WING

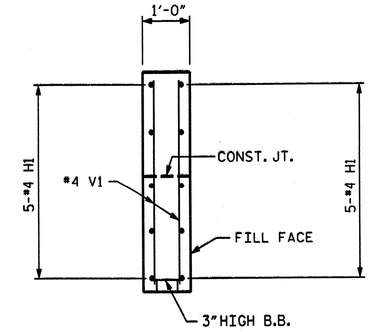

SECTION X-X

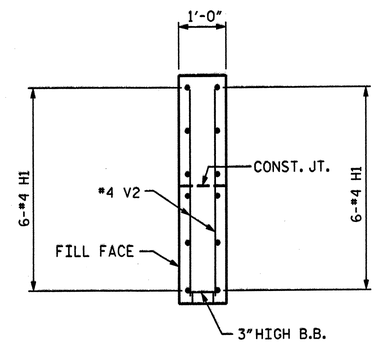

SECTION Y-Y

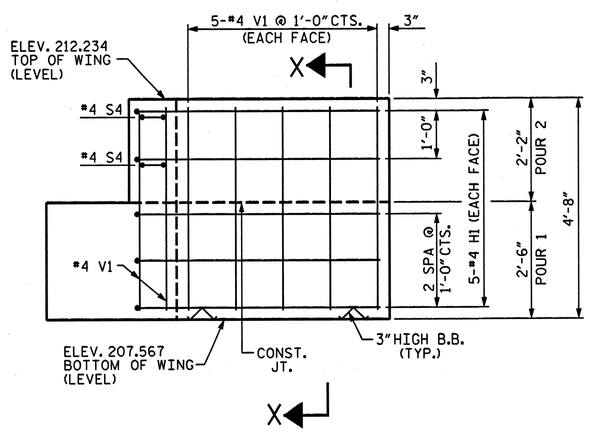

W1 ELEVATION OF LEFT WING

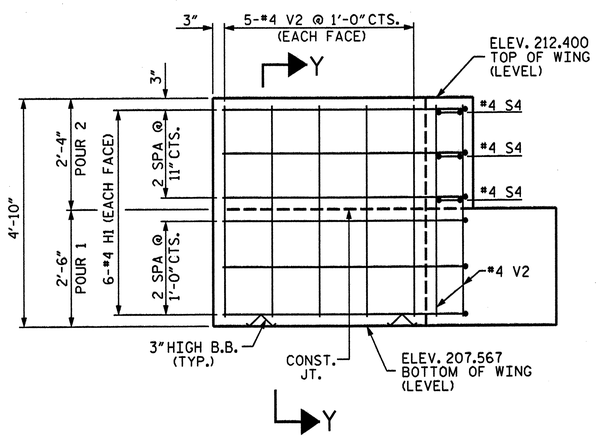

W2 ELEVATION OF RIGHT WING

WBS NO. 37661

FRANKLIN COUNTY

STATION: 13+45.42 -L-

REPLACES BRIDGE NO. 42 SHEET 2 OF 3

STATE OF NORTH CAROLINA
DEPARTMENT OF TRANSPORTATION
RALEIGH

SUBSTRUCTURE

END BENT #1

36' CLEAR ROADWAY - 90° SKEW

NORTH CAROLINA PROFESSIONAL SEAL 19831 ENGINEER DAVID B. SIMPSON, JR.
5-30-06

PLANS PREPARED BY:

SIMPSON ENGINEERS & ASSOCIATES
5520 Dillard Drive
Suite 120
Cary, NC 27518
(919) 852-0468
(919) 852-0598 (Fax)
www.simpsonengr.com

REVISIONS						
NO.	BY:	DATE:	NO.	BY:	DATE:	
1			3			
2			4			

SHEET NO. 32

TOTAL SHEETS 62

DRAWN BY : R. SEALEY DATE : 5/06
CHECKED BY : M. AVERETTE DATE : 5/06

5/30/2006 3:37:31 PM g:\bmu\franklin42\drawings\ncma5018b_sd_ebib_01.dgn

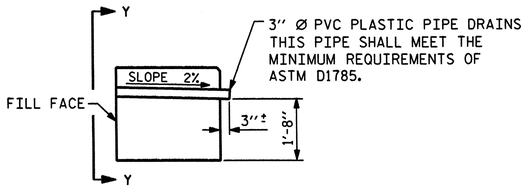

SECTION THRU CAP

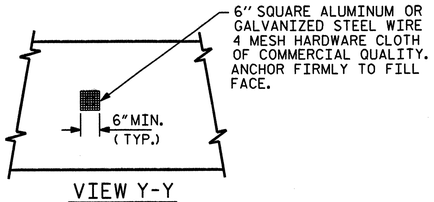

VIEW Y-Y

NOTE: NO SEPARATE PAYMENT WILL BE MADE FOR FURNISHING AND INSTALLING THE PVC PLASTIC PIPE DRAINS, HARDWARE CLOTH AND FASTENERS. THE ENTIRE COST OF THIS WORK SHALL BE INCLUDED IN THE LUMP SUM BID PRICE FOR PLAECMENT OF SUBSTRUCTURE.

PIPE DRAIN DETAILS

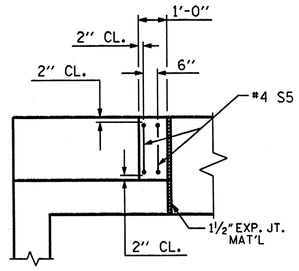

PLAN

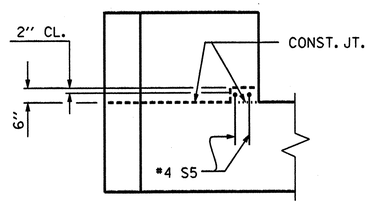

ELEVATION

LATERAL GUIDE DETAILS

BAR TYPES

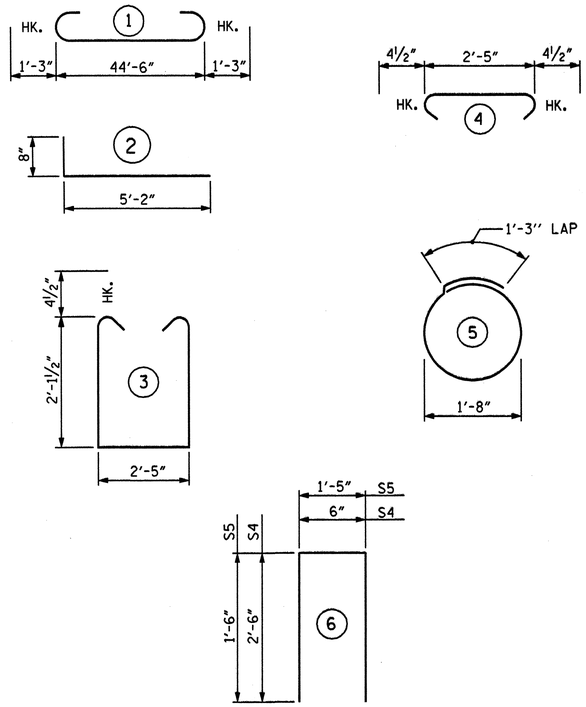

ALL BAR DIMENSIONS ARE OUT TO OUT

BILL OF MATERIAL

END BENT #1

BAR	NO.	SIZE	TYPE	LENGTH	WEIGHT
B1	8	9	1	47'-0"	1278
B2	2	5	STR	44'-6"	93
B3	8	4	STR	23'-6"	126
B4	12	4	STR	2'-5"	19
D1	26	6	STR	1'-6"	59
H1	22	4	2	5'-10"	86
S1	37	4	3	7'-5"	183
S2	37	4	4	3'-2"	78
S3	16	4	5	6'-6"	69
S4	5	4	6	5'-6"	18
S5	4	4	6	4'-5"	12
V1	18	4	STR	4'-3"	51
V2	18	4	STR	4'-5"	53

TOTAL REINFORCING STEEL 2125 LBS.

CLASS "A" CONCRETE BREAKDOWN

POUR #1	12.5 CU. YDS.
POUR #2	1.3 CU. YDS.
TOTAL	13.8 CU. YDS.

HP 12 X 53 STEEL PILES

8 PILES REQUIRED - LIN. FEET 160.0

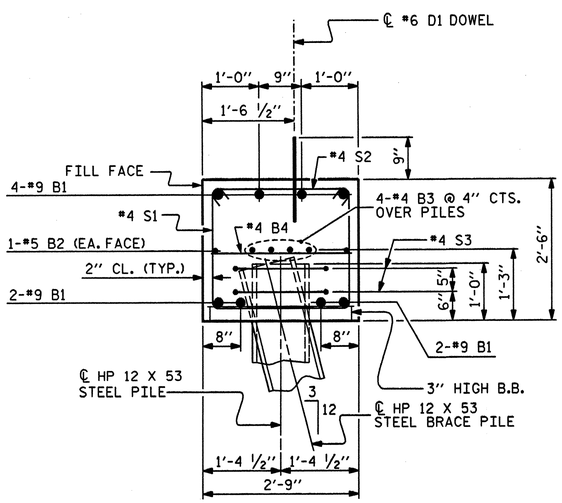

SECTION A-A

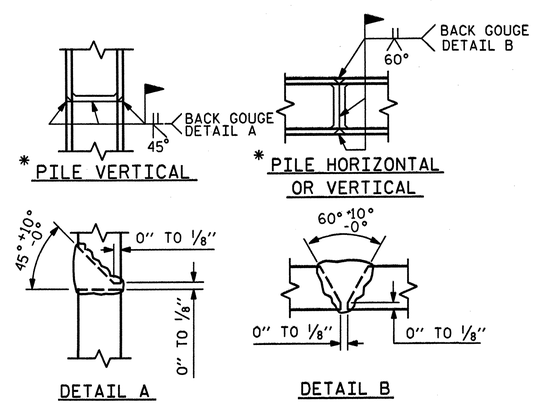

* PILE VERTICAL

* PILE HORIZONTAL OR VERTICAL

DETAIL A

DETAIL B

PILE SPLICE DETAILS

* POSITION OF PILE DURING WELDING.

WBS NO. 37661

FRANKLIN COUNTY

STATION: 13+45.42 -L-

REPLACES BRIDGE NO. 42 SHEET 3 OF 3

STATE OF NORTH CAROLINA
DEPARTMENT OF TRANSPORTATION
RALEIGH

SUBSTRUCTURE

END BENT #1

36' CLEAR ROADWAY - 90° SKEW

NORTH CAROLINA PROFESSIONAL SEAL 19831 ENGINEER DAVID E. SIMPSON, JR.
5-30-06

PLANS PREPARED BY:

SIMPSON ENGINEERS & ASSOCIATES
5520 Dillard Drive
Suite 120
Cary, NC 27518
(919) 852-0468
(919) 852-0598 (Fax)
www.simpsonengr.com

REVISIONS							SHEET NO.
NO.	BY:	DATE:	NO.	BY:	DATE:		33
1			3				TOTAL SHEETS
2			4				62

DRAWN BY : R. SEALEY DATE : 5/06
CHECKED BY : M. AVERETTE DATE : 5/06

5/30/2006 3:37:30 PM g:\bmu\franklin42\drawings\ncma5018b_sd_ebtc_01.dgn

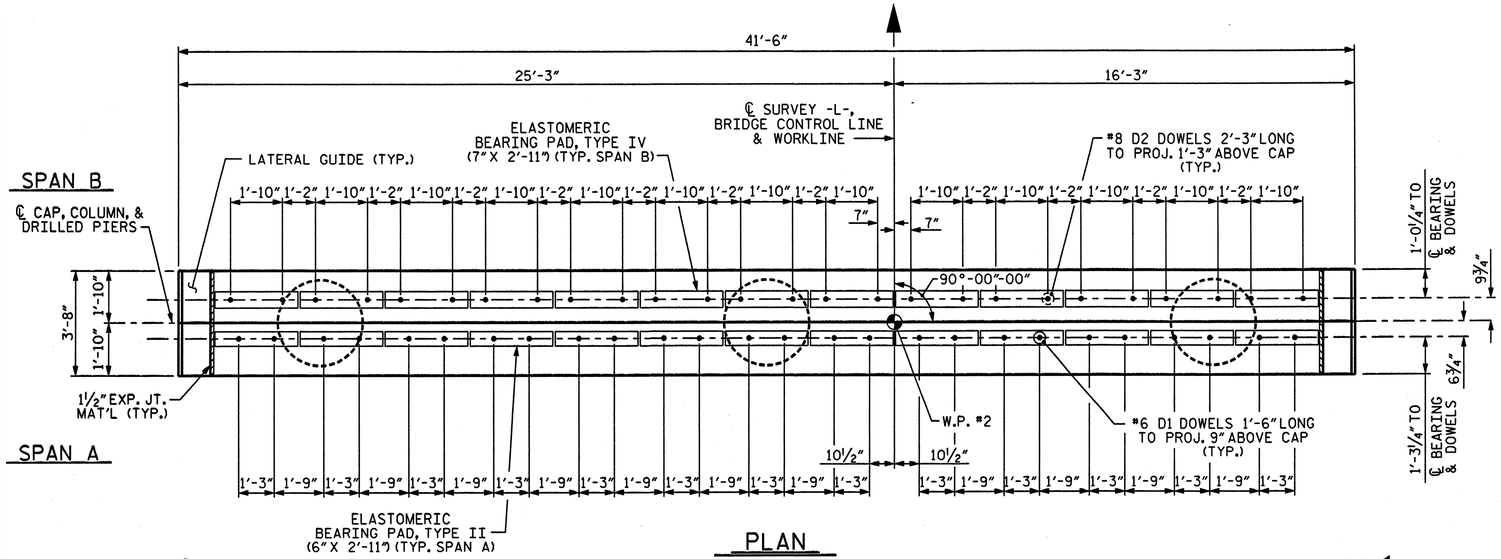

PLAN

NOTES:

STIRRUPS IN THE CAP MAY BE SHIFTED AS NECESSARY TO CLEAR #6 D1 OR #8 D2 DOWELS.

HOOKS ON M2 BARS MAY BE TURNED AS NECESSARY FOR PLACING REINFORCING STEEL.

ALL STEEL IN THE DRILLED PIERS IS INCLUDED IN THE PAY ITEM FOR "REINFORCING STEEL" AND "SPIRAL COLUMN REINFORCING STEEL".

FOR DRILLED PIERS, SEE SPECIAL PROVISIONS.

INVERT ALTERNATE STIRRUPS.

NO SEPARATE PAYMENT SHALL BE MADE FOR ANY ADDITIONAL STEEL REQUIRED IN CONSTRUCTION OF THE DRILLED PIER AS THIS IS CONSIDERED INCIDENTAL TO THE LINEAR FOOT PRICE FOR DRILLED PIER.

THE CONTRACTORS ATTENTION IS CALLED TO THE FACT THAT THE LONGITUDINAL REINFORCEMENT FOR THE DRILLED PIER IS DETAILED WITH THREE FEET OF EXTRA LENGTH.

FOR PERMANENT STEEL CASING, SEE SPECIAL PROVISIONS FOR DRILLED PIERS.

THE LOCATION OF THE CONSTRUCTION JOINT IN THE DRILLED PIERS IS BASED ON AN APPROXIMATE GROUND LINE ELEVATION. IF THE CONSTRUCTION JOINT IS ABOVE THE ACTUAL GROUND LINE ELEVATION, THE CONTRACTOR SHALL PLACE THE CONSTRUCTION JOINT 1 FT. BELOW THE GROUND LINE.

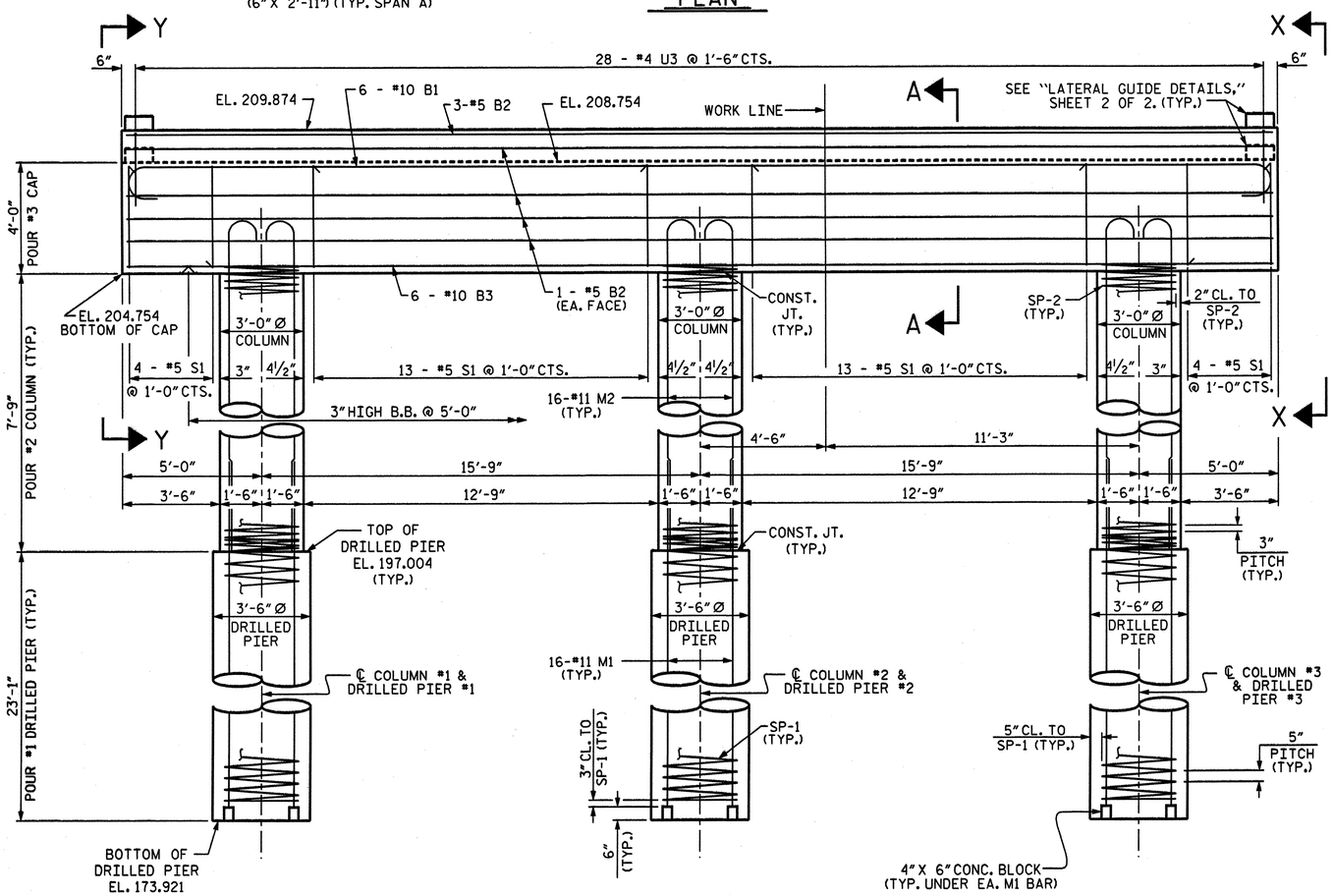

ELEVATION

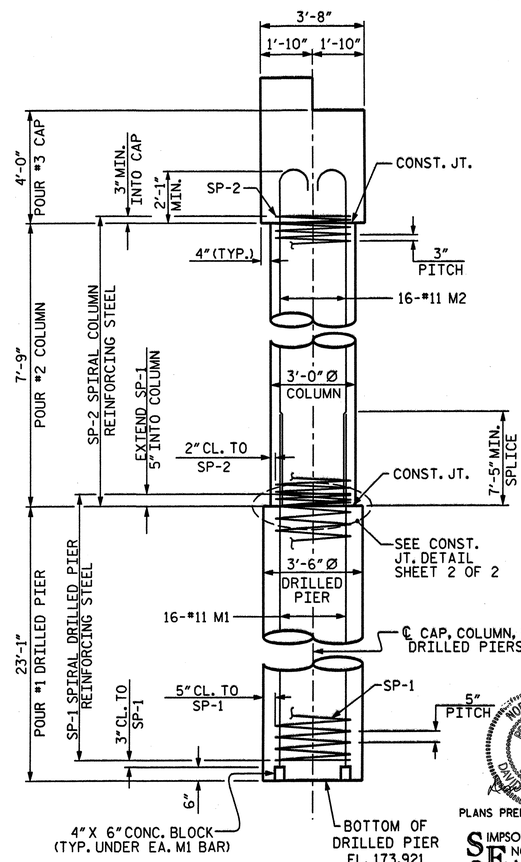

END ELEVATION

WBS NO. 37661

FRANKLIN COUNTY

STATION: 13+45.42 -L-

REPLACES BRIDGE NO. 42 SHEET 1 OF 2

STATE OF NORTH CAROLINA
DEPARTMENT OF TRANSPORTATION
RALEIGH

SUBSTRUCTURE

BENT #1

36' CLEAR ROADWAY - 90° SKEW

NORTH CAROLINA PROFESSIONAL SEAL 19831 ENGINEER DAVID A. SIMPSON

PLANS PREPARED BY:

SIMPSON ENGINEERS & ASSOCIATES
5520 Dillard Drive
Suite 120
Cary, NC 27518
(919) 852-0468
(919) 852-0598 (Fax)
www.simpsonengr.com

REVISIONS							
NO.	BY:	DATE:	NO.	BY:	DATE:	SHEET NO.	34
1			3			TOTAL SHEETS	62
2			4				

DRAWN BY : R. SEALEY DATE : 5/06
CHECKED BY : M. AVERETTE DATE : 5/06

5/30/2006 3:37:30 PM gr:\BMU\Franklin42\Drawings\NCMA5018B_sd_b1a_01.dgn

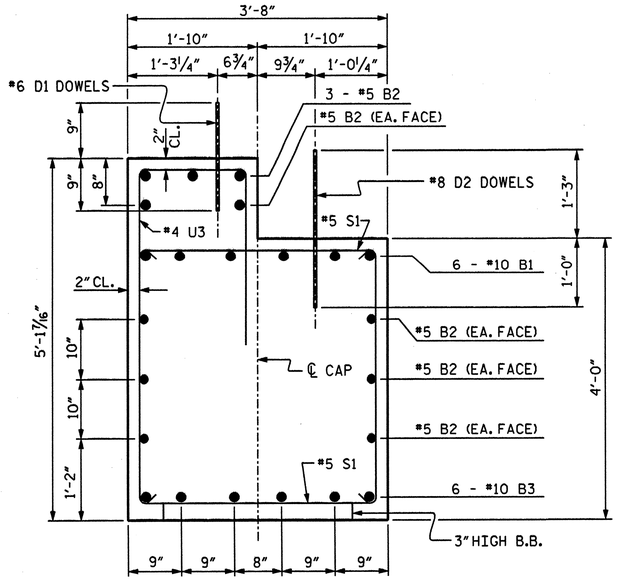

SECTION A-A

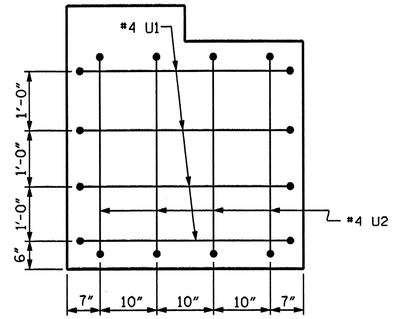

SECTION X-X

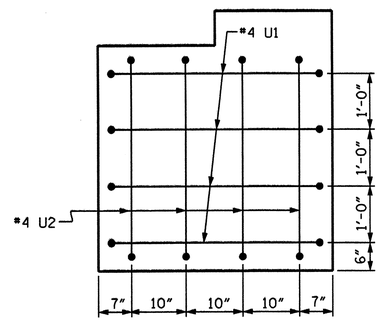

SECTION Y-Y

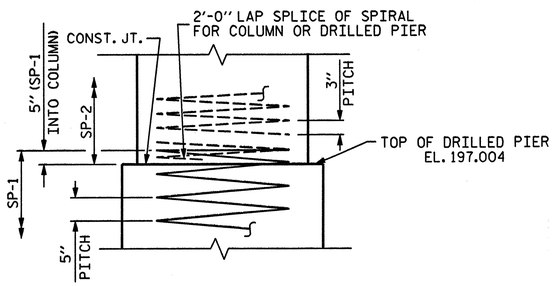

CONSTRUCTION JOINT DETAIL

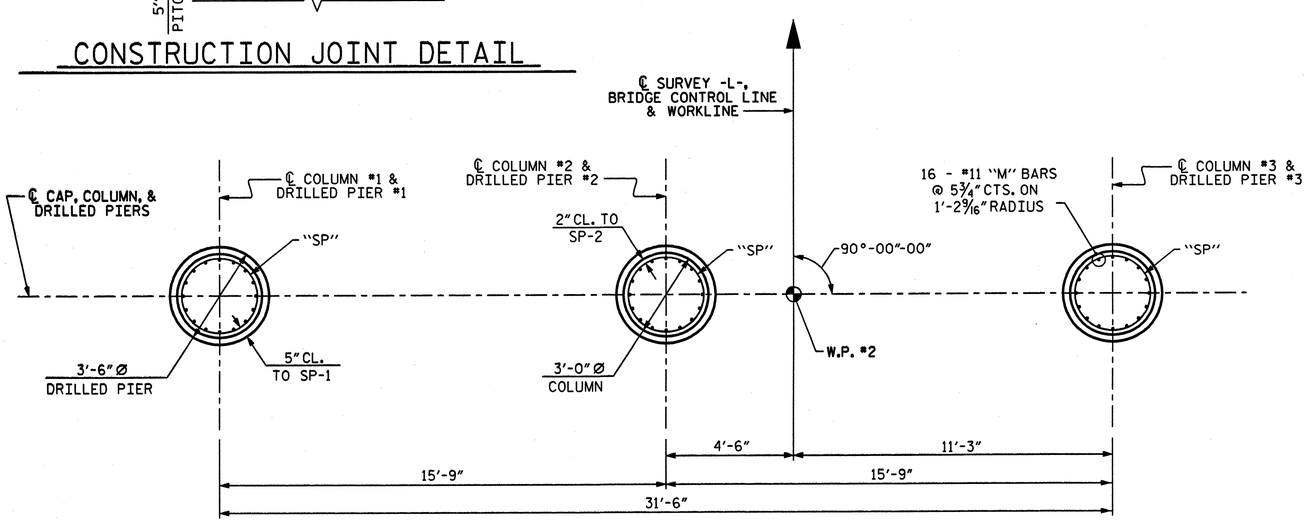

PLAN OF COLUMNS & DRILLED PIERS

NOTE: REINFORCING STEEL AND DIMENSIONS ARE TYPICAL FOR ALL COLUMNS & DRILLED PIERS.

BAR TYPES

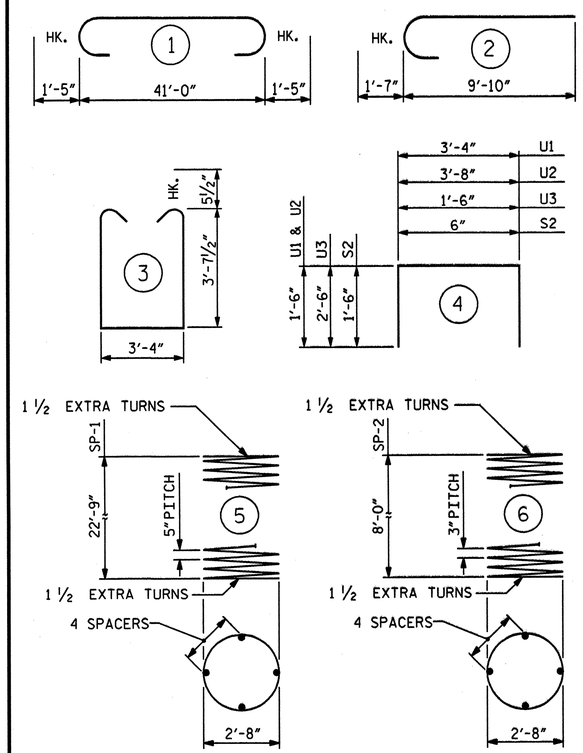

ALL BAR DIMENSIONS ARE OUT TO OUT

BILL OF MATERIAL

BENT #1

BAR	NO.	SIZE	TYPE	LENGTH	WEIGHT
B1	6	10	1	43'-10"	1132
B2	11	5	STR	41'-0"	470
B3	6	10	STR	41'-0"	1059
B4	8	4	STR	1'-6"	8
D1	26	6	STR	1'-6"	59
D2	26	8	STR	2'-3"	156
M1	48	11	STR	33'-0"	8416
M2	48	11	2	11'-5"	2912
S1	34	5	3	11'-6"	408
S2	12	4	4	3'-6"	28
U1	8	4	4	6'-4"	34
U2	8	4	4	6'-8"	36
U3	28	4	4	6'-6"	122
SP-1	3	✱✱	5	473'-9"	1482
SP-2	3	✱✱✱	6	288'-10"	579

REINFORCING STEEL 14840 LBS.

SPIRAL REINFORCING STEEL 2061 LBS.

CLASS "A" CONCRETE BREAKDOWN
POUR #2 (COLUMN) 6.1 CU. YDS.
POUR #3 (CAP & LAT. GUIDES) 25.8 CU. YDS.
TOTAL CLASS "A" CONCRETE 31.9 CU. YDS.

DRILLED PIER QUANTITIES

DRILLED PIER CONCRETE
POUR #1 (DRILLED PIER) 24.7 CU. YDS.

3'-6" Ø DRILLED PIERS IN SOIL 42.3 LIN. FT.

3'-6" Ø DRILLED PIERS
NOT IN SOIL 27.0 LIN. FT.

3'-6" Ø PERMANENT STEEL CASING 21.0 LIN. FT.

✱✱ THE SP-1 SPIRAL REINFORCING STEEL SHALL BE W31 OR D-31 COLD DRAWN WIRE OR #5 PLAIN OR DEFORMED BAR.

✱✱✱ THE SP-2 SPIRAL REINFORCING STEEL SHALL BE W20 OR D-20 COLD DRAWN WIRE OR #4 PLAIN OR DEFORMED BAR.

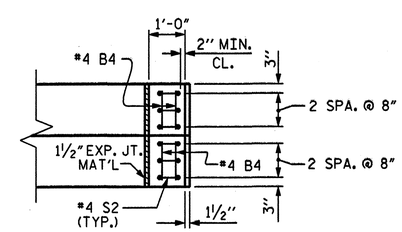

PLAN

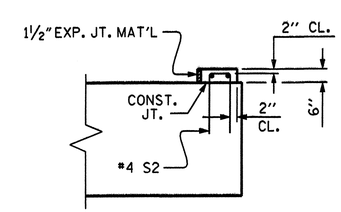

ELEVATION

LATERAL GUIDE DETAILS

WBS NO. 37661

FRANKLIN COUNTY

STATION: 13+45.42 -L-

REPLACES BRIDGE NO. 42 SHEET 2 OF 2

STATE OF NORTH CAROLINA
DEPARTMENT OF TRANSPORTATION
RALEIGH

SUBSTRUCTURE

BENT #1

36' CLEAR ROADWAY - 90° SKEW

NORTH CAROLINA PROFESSIONAL SEAL 19831 ENGINEER DAVID L. SIMPSON, JR. 5-30-06

PLANS PREPARED BY:

SIMPSON ENGINEERS & ASSOCIATES
5520 Dillard Drive
Suite 120
Cary, NC 27518
(919) 852-0468
(919) 852-0598 (Fax)
www.simpsonengr.com

REVISIONS								SHEET NO.
NO.	BY:	DATE:	NO.	BY:	DATE:			35
1			3					TOTAL SHEETS
2			4					62

DRAWN BY : R. SEALEY DATE : 5/06
CHECKED BY : M. AVERETTE DATE : 5/06

5/30/2006 3:37:30 PM g:\BMU\Franklin42\Drawings\NCMA5018B_sd_bib_01.dgn

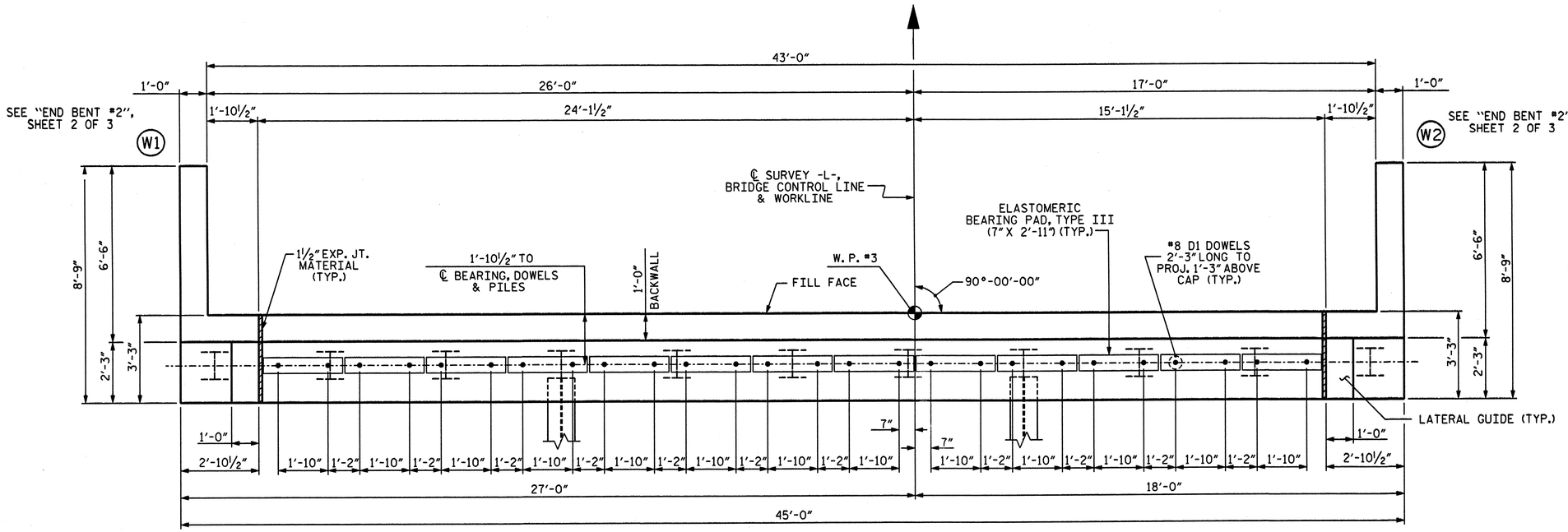

PLAN

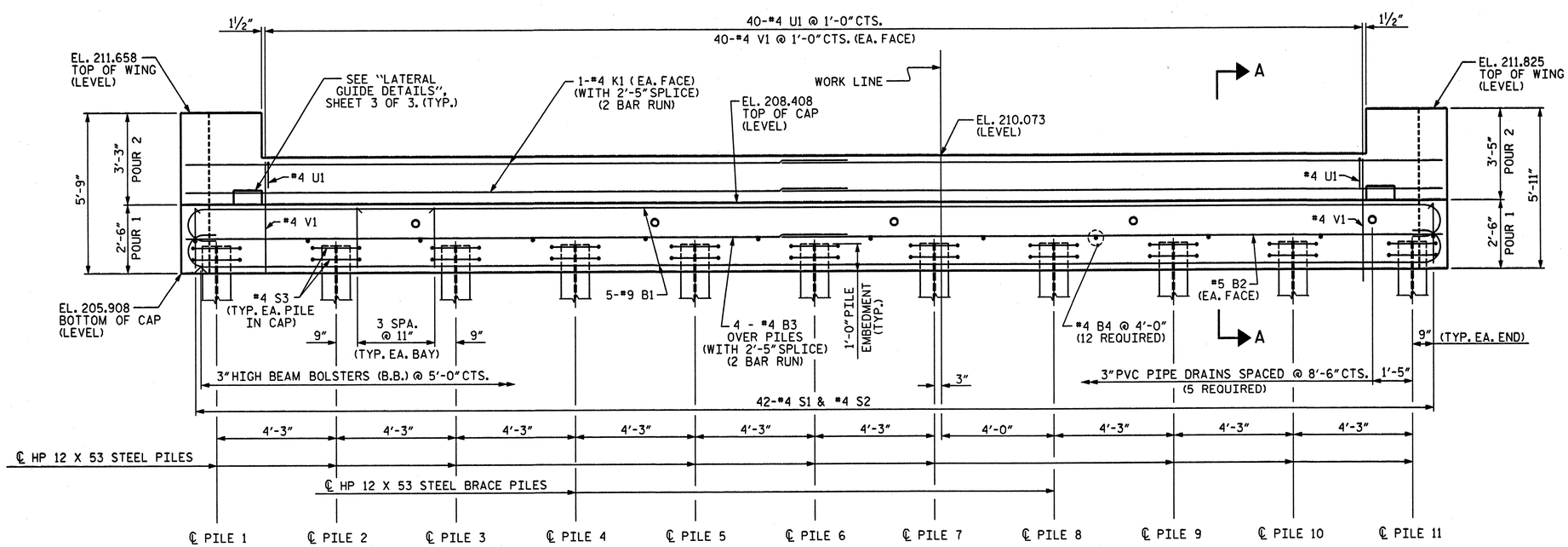

ELEVATION

NOTES

STIRRUPS IN CAP MAY BE SHIFTED AS NECESSARY TO CLEAR *8 D1 DOWELS.

PIPE DRAINS MAY BE SHIFTED SLIGHTLY AS NECESSARY TO CLEAR REINFORCING STEEL AND DOWELS.

WBS NO. 37661

FRANKLIN COUNTY

STATION: 13+45.42 -L-

REPLACES BRIDGE NO. 42 SHEET 1 OF 3

STATE OF NORTH CAROLINA
DEPARTMENT OF TRANSPORTATION
RALEIGH

SUBSTRUCTURE

END BENT #2

36' CLEAR ROADWAY - 90° SKEW

NORTH CAROLINA PROFESSIONAL SEAL 19831 ENGINEER DAVID A. SIMPSON, JR.

5-30-06

PLANS PREPARED BY:

SIMPSON ENGINEERS & ASSOCIATES

5520 Dillard Drive
Suite 120
Cary, NC 27518
(919) 852-0468
(919) 852-0598 (Fax)
www.simpsonengr.com

REVISIONS							SHEET NO.
NO.	BY:	DATE:	NO.	BY:	DATE:		36
1			3				TOTAL SHEETS
2			4				62

DRAWN BY : R. SEALEY DATE : 5/06
CHECKED BY : M. AVERETTE DATE : 5/06

5/30/2006 3:37:29 PM g:\bmu\franklin42\drawings\ncma50188_sd_eb2a_01.dgn

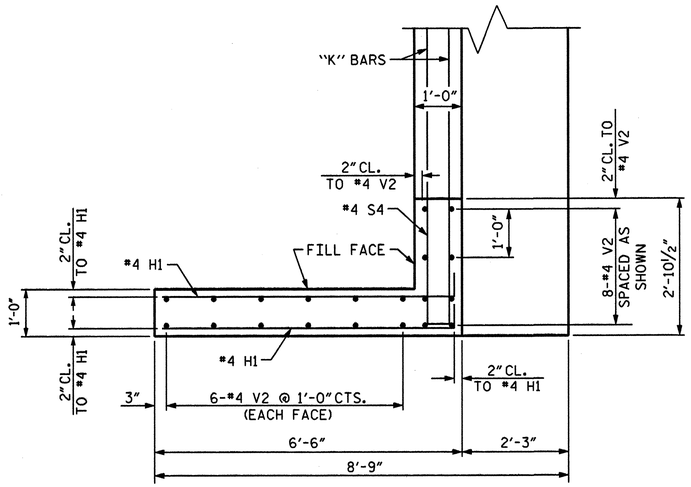

W1 PLAN OF LEFT WING

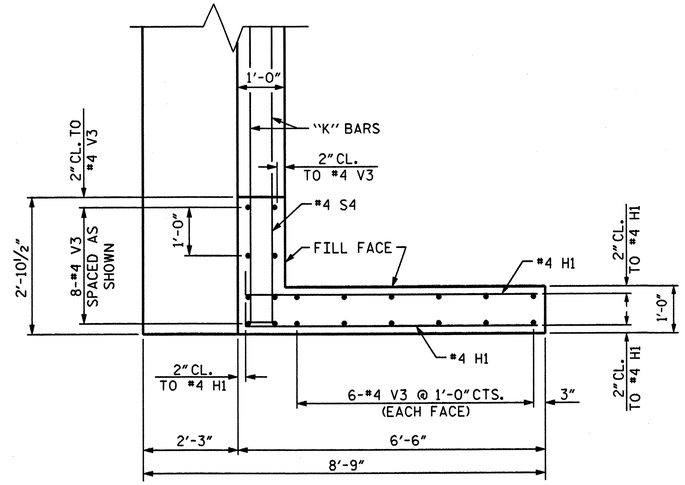

W2 PLAN OF RIGHT WING

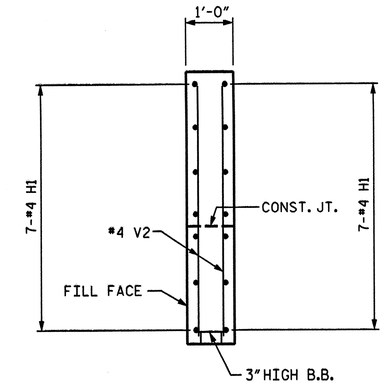

SECTION Y-Y

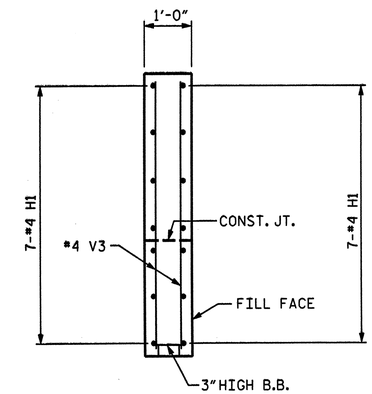

SECTION X-X

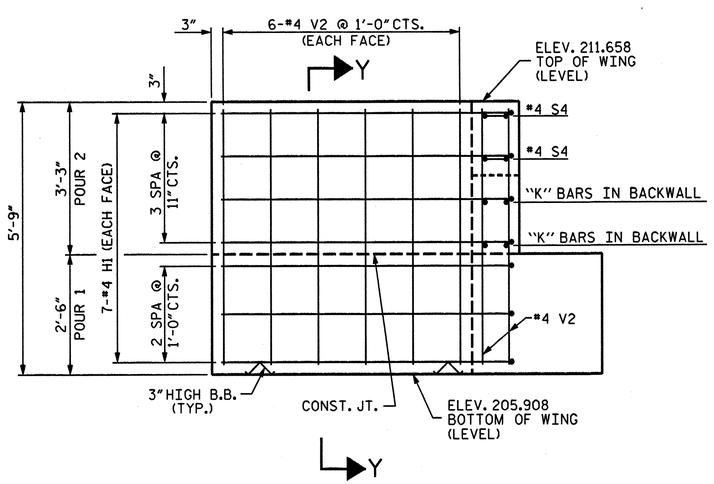

W1 ELEVATION OF LEFT WING

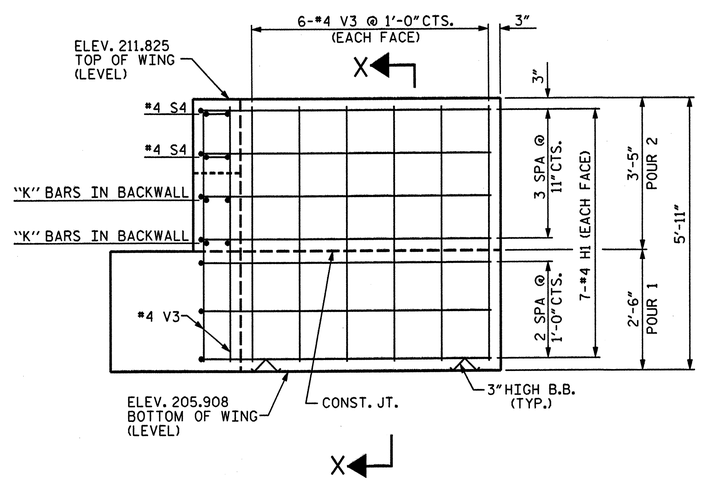

W2 ELEVATION OF RIGHT WING

WBS NO. 37661

FRANKLIN COUNTY

STATION: 13+45.42 -L-

REPLACES BRIDGE NO. 42 SHEET 2 OF 3

NORTH CAROLINA PROFESSIONAL SEAL 19831 ENGINEER DAVID E. SIMPSON, JR.

5-30-06

PLANS PREPARED BY:

SIMPSON ENGINEERS & ASSOCIATES
5520 Dillard Drive
Suite 120
Cary, NC 27518
(919) 852-0468
(919) 852-0598 (Fax)
www.simpsonengr.com

STATE OF NORTH CAROLINA
DEPARTMENT OF TRANSPORTATION
RALEIGH

SUBSTRUCTURE

END BENT #2

36' CLEAR ROADWAY - 90° SKEW

REVISIONS						SHEET NO.
NO.	BY:	DATE:	NO.	BY:	DATE:	37
1			3			TOTAL SHEETS
2			4			62

DRAWN BY : R. SEALEY DATE : 5/06
CHECKED BY : M. AVERETTE DATE : 5/06

5/30/2006 3:37:29 PM g:\bmu\franklin42\drawings\ncma5018b_sd_eb2b_01.dgn

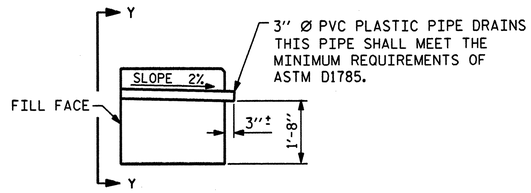

SECTION THRU CAP

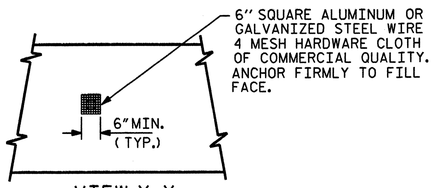

VIEW Y-Y

NOTE: NO SEPARATE PAYMENT WILL BE MADE FOR FURNISHING AND INSTALLING THE PVC PLASTIC PIPE DRAINS, HARDWARE CLOTH AND FASTENERS. THE ENTIRE COST OF THIS WORK SHALL BE INCLUDED IN THE LUMP SUM BID PRICE FOR PLAECMENT OF SUBSTRUCTURE.

PIPE DRAIN DETAILS

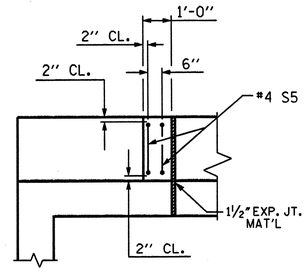

PLAN

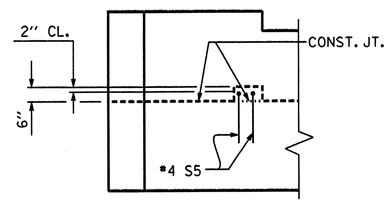

ELEVATION

LATERAL GUIDE DETAILS

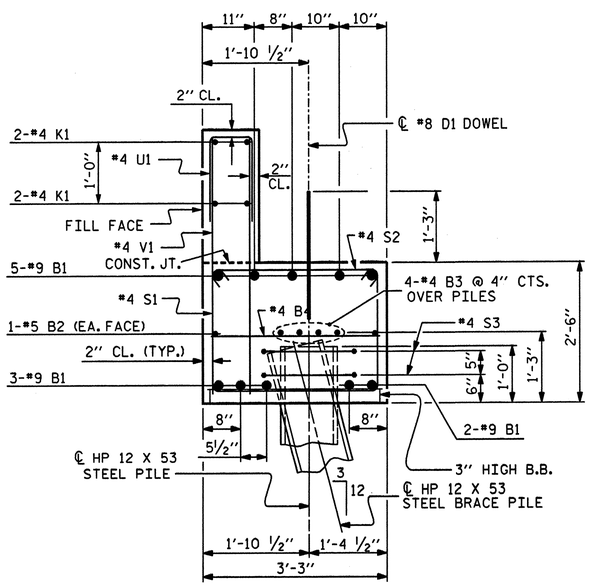

SECTION A-A

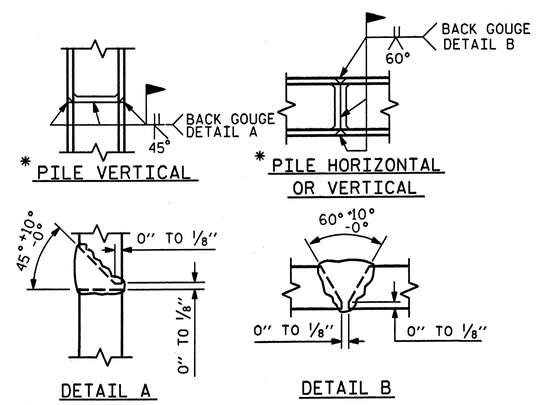

PILE SPLICE DETAILS

* POSITION OF PILE DURING WELDING.

BAR TYPES

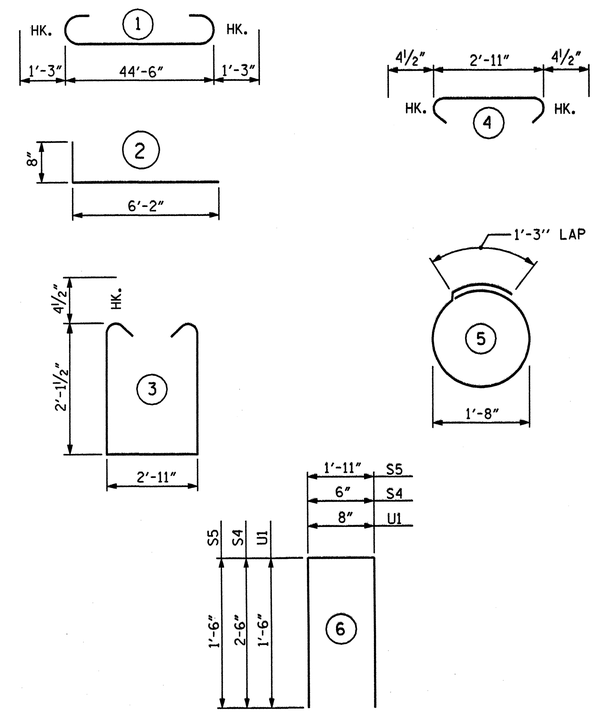

ALL BAR DIMENSIONS ARE OUT TO OUT

BILL OF MATERIAL
END BENT #2

BAR	NO.	SIZE	TYPE	LENGTH	WEIGHT
B1	10	9	1	47'-0"	1598
B2	2	5	STR	44'-6"	93
B3	8	4	STR	23'-6"	126
B4	12	4	STR	2'-11"	23
D1	26	8	STR	2'-3"	156
H1	28	4	2	6'-10"	128
K1	8	4	STR	23'-6"	126
S1	42	4	3	7'-11"	222
S2	42	4	4	3'-8"	103
S3	22	4	5	6'-6"	96
S4	4	4	6	5'-6"	15
S5	4	4	6	4'-11"	13
U1	40	4	6	3'-8"	98
V1	80	4	STR	3'-10"	205
V2	20	4	STR	5'-4"	71
V3	20	4	STR	5'-6"	73

TOTAL REINFORCING STEEL 3146 LBS.

CLASS "A" CONCRETE BREAKDOWN

POUR #1	14.6 CU. YDS.
POUR #2	4.7 CU. YDS.
TOTAL	19.3 CU. YDS.

HP 12 X 53 STEEL PILES

11 PILES REQUIRED - LIN. FEET 495.0

WBS NO. 37661

FRANKLIN COUNTY

STATION: 13+45.42 -L-

REPLACES BRIDGE NO. 42 SHEET 3 OF 3

STATE OF NORTH CAROLINA
DEPARTMENT OF TRANSPORTATION
RALEIGH

SUBSTRUCTURE

END BENT #2

36' CLEAR ROADWAY - 90° SKEW

NORTH CAROLINA PROFESSIONAL SEAL 19831 ENGINEER DAVID B. SIMPSON, JR.
5-30-06

PLANS PREPARED BY:
SIMPSON ENGINEERS & ASSOCIATES
5520 Dillard Drive
Suite 120
Cary, NC 27518
(919) 852-0468
(919) 852-0598 (Fax)
www.simpsonengr.com

REVISIONS						SHEET NO.
NO.	BY:	DATE:	NO.	BY:	DATE:	38
1			3			TOTAL SHEETS
2			4			62

DRAWN BY : R. SEALEY DATE : 5/06
CHECKED BY : M. AVERETTE DATE : 5/06

5/30/2006 3:37:29 PM g:\bmu\franklin42\drawings\vncmd5018b_sd_eb2c_01.dgn

FRANKLIN COUNTY (BRIDGE #41) NCMA-5017B

EXISTING BRIDGE #41
24'-1" CLEAR ROADWAY
SPANS: 1 @ 40'-3", 1 @ 40'-3"
CONCRETE DECK ON I-BEAMS
ABUTMENTS: TIMBER CAP ON TIMBER PILES
INTERIOR BENT: TIMBER CAP ON TIMBER PILES

BM #1:
NAIL SET IN 6" PINE
44.2' LT. OF STA. 4+48.7 -BL-
NOT ON -L- CHAIN
ELEV. = 227.05'

BM #2:
RAILROAD SPIKE IN 30" MAPLE
52.6' RT. OF STA. 12+59.5 -BL-
64.5' RT. OF STA. 14+71.89 -L-
ELEV. = 204.36'

HYDROGRAPHIC DATA:

DESIGN DISCHARGE -	2220 CFS
FREQUENCY OF DESIGN FLOOD -	25 YEAR
DESIGN HIGH WATER ELEVATION -	205.8
DRAINAGE AREA -	10.9 SQ. MI.
BASIC DISCHARGE (Q 100) -	3315 CFS
BASIC HIGH WATER ELEVATION -	207.3

OVERTOPPING FLOOD DATA:

OVERTOPPING DISCHARGE -	4920 CFS
FREQUENCY OF OVERTOPPING FLOOD -	500+ YEAR
OVERTOPPING FLOOD ELEVATION -	211.6

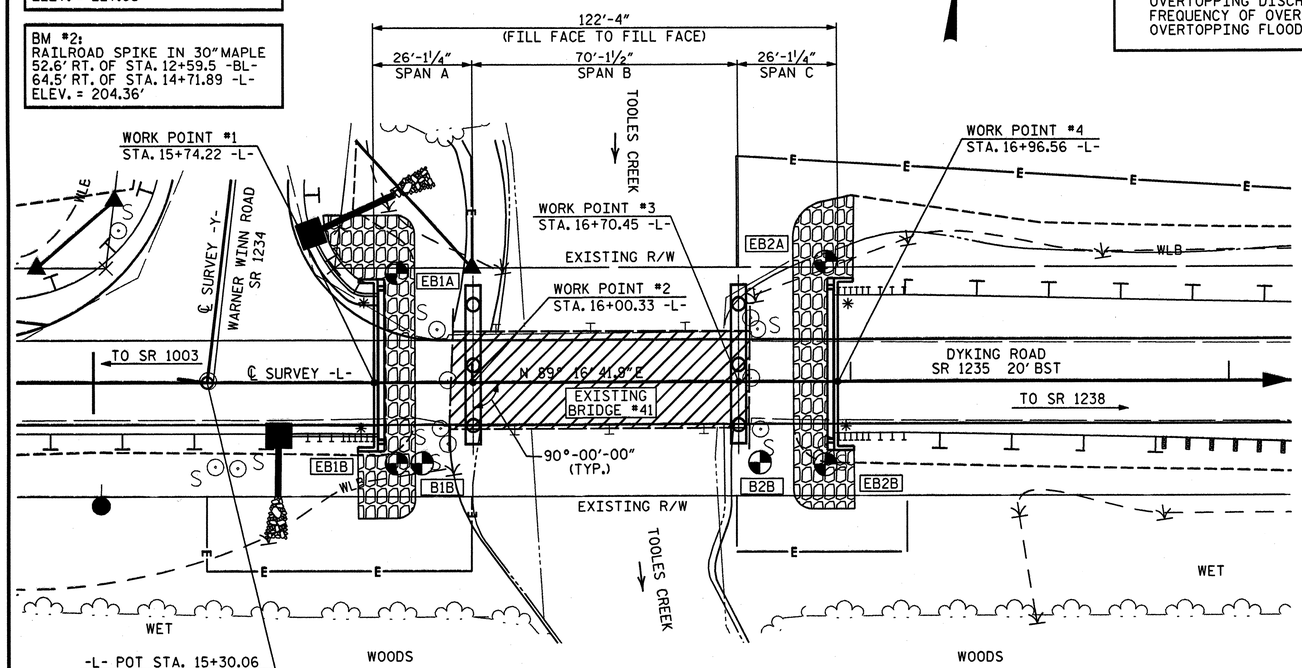

PLAN

SCALE : 1" = 20'

DENOTES GEO-TECH BORE HOLE LOCATIONS.

* DENOTES GUARDRAIL CONNECTION REQ'D., SEE "GUARDRAIL ANCHOR UNIT" SHEET.

NOTES

FOR EROSION CONTROL MEASURES, SEE EROSION CONTROL PLANS.

REMOVAL OF THE EXISTING BRIDGE SHALL BE PERFORMED SO AS NOT TO ALLOW DEBRIS TO FALL INTO THE WATER. THE CONTRACTOR SHALL REMOVE THE BRIDGE AND SUBMIT PLANS FOR THE DEMOLITION IN ACCORDANCE WITH ARTICLE 402-2 OF THE STANDARD SPECIFICATIONS.

THE SUBSTRUCTURE OF THE EXISTING BRIDGE INDICATED ON THE PLANS IS FROM THE BEST INFORMATION AVAILABLE. SINCE THIS INFORMATION IS SHOWN FOR THE CONVENIENCE OF THE CONTRACTOR, THE CONTRACTOR SHALL HAVE NO CLAIM WHATSOEVER AGAINST THE DEPARTMENT OF TRANSPORTATION FOR ANY DELAYS OR ADDITIONAL COST INCURRED BASED ON DIFFERENCES BETWEEN THE EXISTING BRIDGE SUBSTRUCTURE SHOWN ON THE PLANS AND THE ACTUAL CONDITIONS AT THE PROJECT SITE.

THIS STRUCTURE HAS BEEN DESIGNED IN ACCORDANCE WITH HEC 18, "EVALUATING SCOUR AT BRIDGES", NOVEMBER 1995.

THIS BRIDGE HAS BEEN DESIGNED IN ACCORDANCE WITH THE REQUIREMENTS OF THE AASHTO STANDARD SPECIFICATIONS FOR SEISMIC DESIGN OF HIGHWAY BRIDGES FOR SEISMIC CATEGORY A.

INASMUCH AS THE PAINT SYSTEM ON THE EXISTING STRUCTURAL STEEL CONTAINS LEAD, THE CONTRACTOR'S ATTENTION IS DIRECTED TO ARTICLE 107-1, OF THE STANDARD SPECIFICATIONS. ANY COSTS RESULTING FROM COMPLIANCE WITH APPLICABLE STATE OR FEDERAL REGULATIONS PERTAINING TO HANDLING OF MATERIALS CONTAINING LEAD BASED PAINT SHALL BE INCLUDED IN THE BID PRICE FOR "REMOVAL OF EXISTING STRUCTURE AT STATION 16+35.39".

WHEN DRIVING PILES, THE MAXIMUM BLOW COUNT SHALL NOT BE EXCEEDED.

PILES FOR END BENT #1 AND END BENT #2 SHALL BE DRIVEN TO A MINIMUM BEARING CAPACITY OF 50 TONS EACH.

THE SCOUR CRITICAL ELEVATION FOR BENT #1 AND BENT #2 IS ELEV. 194 FT. THE SCOUR CRITICAL ELEVATIONS ARE FOR USE BY MAINTENANCE FORCES TO MONITOR POSSIBLE SCOUR PROBLEMS DURING THE LIFE OF THE STRUCTURE.

THIS STRUCTURE HAS BEEN DESIGNED IN ACCORDANCE WITH FHWA'S TECHNICAL ADVISORY T5140.20 (SCOUR AT BRIDGES).

THIS BRIDGE HAS BEEN DESIGNED BY THE STRENGTH DESIGN AS SPECIFIED IN ASSHTO STANDARD SPECIFICATIONS.

THE QUANTITY OF RIP RAP TO BE PAID FOR WILL BE THE ACTUAL NUMBER OF TONS OF EACH CLASS OF RIP RAP WHICH HAS BEEN INCORPORATED INTO THE COMPLETED AND ACCEPTED WORK. THE RIP RAP WILL BE MEASURED BY BEING WEIGHED IN TRUCKS ON CERTIFIED PLATFORM SCALES OR OTHER CERTIFIED WEIGHING DEVICES. THE QUANTITY OF RIP RAP WILL BE PAID FOR AT THE CONTRACT UNIT PRICE PER TON:

PLAIN RIP RAP CLASS II (2'-0" THICK) & FILTER FABRIC

END BENT #1	100	TONS & 110 SY FILTER FABRIC
END BENT #2	100	TONS & 110 SY FILTER FABRIC
TOTAL	200	TONS & 220 SY FILTER FABRIC

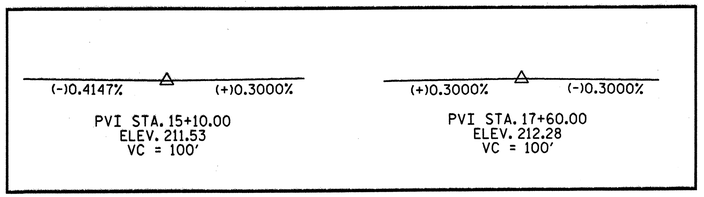

GRADE DATA -L- (SR 1235)

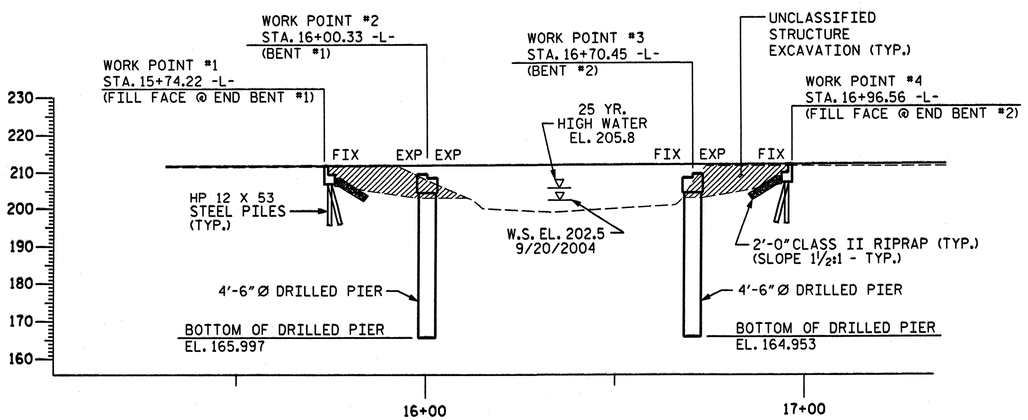

PROFILE ALONG ℄ SURVEY

SCALE : 1" = 20'

DRILLED PIER NOTES

THE DRILLED PIERS AT BENT #1 AND BENT #2 HAVE BEEN DESIGNED FOR BOTH SKIN FRICTION AND TIP BEARING. THE REQUIRED TIP BEARING CAPACITY IS 15 TSF.

THE REQUIRED TIP BEARING CAPACITY AT BENT #1 AND BENT #2 SHALL BE VERIFIED.

DRILLED PIERS FOR BENT #1 AND BENT #2 HAVE BEEN DESIGNED FOR AN APPLIED LOAD OF 190 TONS EACH AT THE TOP OF THE COLUMN.

DRILLED PIERS AT BENT #1 SHALL EXTEND TO AN ELEVATION NO HIGHER THAN 166 FEET AND SATISFY THE REQUIRED TIP BEARING CAPACITY.

DRILLED PIERS AT BENT #2 SHALL EXTEND TO AN ELEVATION NO HIGHER THAN 165 FEET AND SATISFY THE REQUIRED TIP BEARING CAPACITY.

PERMANENT STEEL CASING MAY BE REQUIRED FOR DRILLED PIERS AT BENT #1. IF REQUIRED, THE CASING SHALL NOT EXTEND BELOW ELEVATION 176 FT WITHOUT THE ENGINEER'S PERMISSION. THE NEED FOR PERMANENT STEEL CASING WILL BE DETERMINED BY THE ENGINEER.

PERMANENT STEEL CASING MAY BE REQUIRED FOR DRILLED PIERS AT BENT #2. IF REQUIRED, THE CASING SHALL NOT EXTEND BELOW ELEVATION 173 FT WITHOUT THE ENGINEER'S PERMISSION. THE NEED FOR PERMANENT STEEL CASING WILL BE DETERMINED BY THE ENGINEER.

SPT TESTING IS NOT REQUIRED TO DETERMINE THE TIP BEARING CAPACITY OF DRILLED PIERS AT BENT #1 AND BENT #2.

SID INSPECTIONS ARE NOT REQUIRED TO DETERMINE THE BOTTOM CLEANLINESS OF THE DRILLED PIERS AT BENT #1 AND BENT #2.

FOR PERMANENT STEEL CASING, SEE SPECIAL PROVISIONS FOR DRILLED PIERS.

NO SEPARATE PAYMENT SHALL BE MADE FOR ANY ADDITIONAL STEEL REQUIRED IN CONSTRUCTION OF THE DRILLED PIER AS THIS IS CONSIDERED INCIDENTAL TO THE LINEAR FOOT PRICE FOR DRILLED PIER.

THE CONTRACTORS ATTENTION IS CALLED TO THE FACT THAT THE REINFORCEMENT FOR THE DRILLED PIER IS DETAILED WITH THREE FEET OF EXTRA LENGTH.

SLURRY CONSTRUCTION SHALL NOT BE USED FOR THIS PROJECT.

FOR DRILLED PIERS, SEE SPECIAL PROVISIONS.

NORTH CAROLINA PROFESSIONAL SEAL 19831 ENGINEER DAVID B. SIMPSON, JR.
6-30-06

PLANS PREPARED BY:
SIMPSON ENGINEERS & ASSOCIATES
5520 Dillard Drive
Suite 120
Cary, NC 27518
(919) 852-0468
(919) 852-0598 (Fax)
www.simpsonengr.com

WBS NO. 37661
FRANKLIN COUNTY
STATION: 16+35.39 -L-

REPLACES BRIDGE NO. 41

STATE OF NORTH CAROLINA
DEPARTMENT OF TRANSPORTATION
RALEIGH

GENERAL DRAWING
(BRIDGE ON SR 1235 OVER TOOLES CREEK)

36' CLEAR ROADWAY - 90° SKEW

REVISIONS							SHEET NO.
NO.	BY:	DATE:	NO.	BY:	DATE:		39
1			3				TOTAL SHEETS
2			4				62

DRAWN BY : R. SEALEY DATE : 5/06
CHECKED BY : M. AVERETTE DATE : 5/06

5/30/2006 3:31:52 PM gr\bmu\franklin41\drawings\ncma5017b_sd_gd_01.dgn

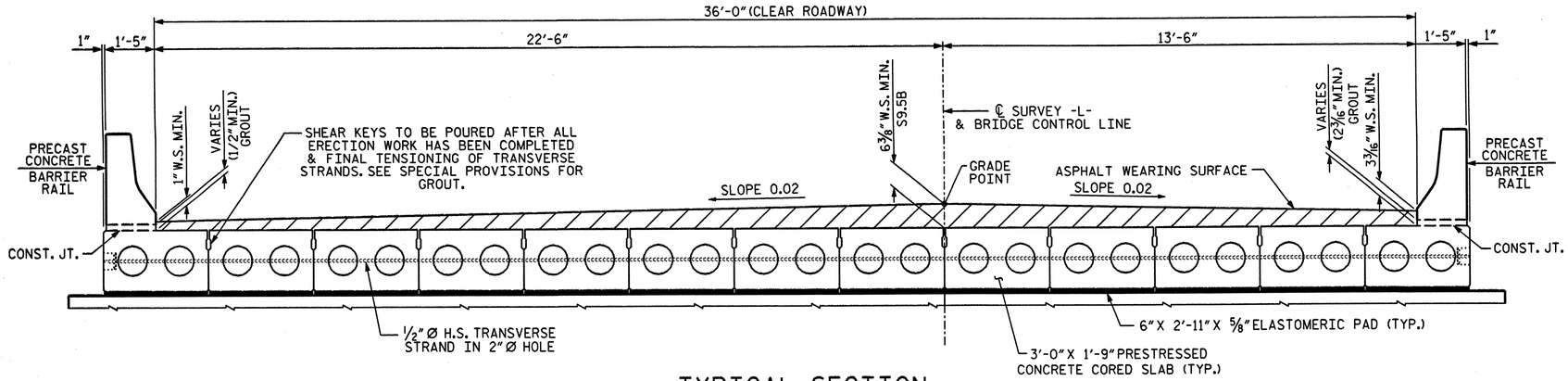

TYPICAL SECTION

(SPANS A & C)

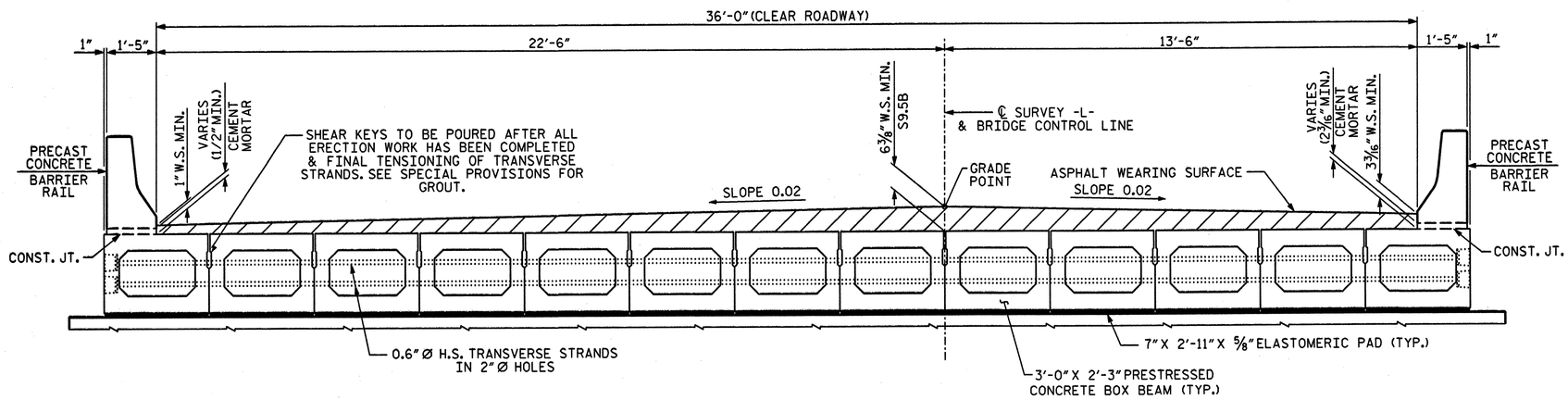

TYPICAL SECTION

(SPAN B)

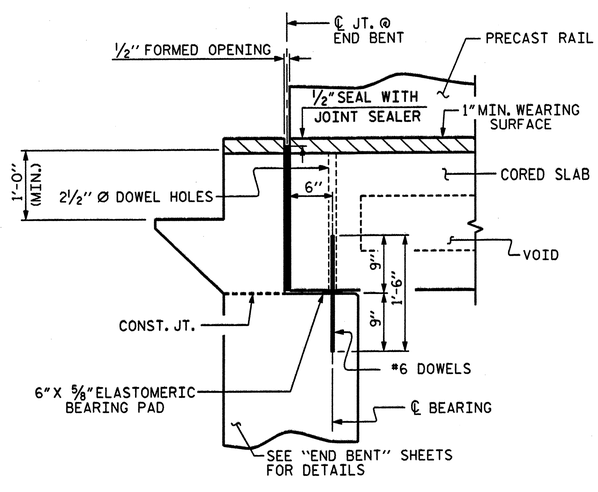

SECTION AT END BENT

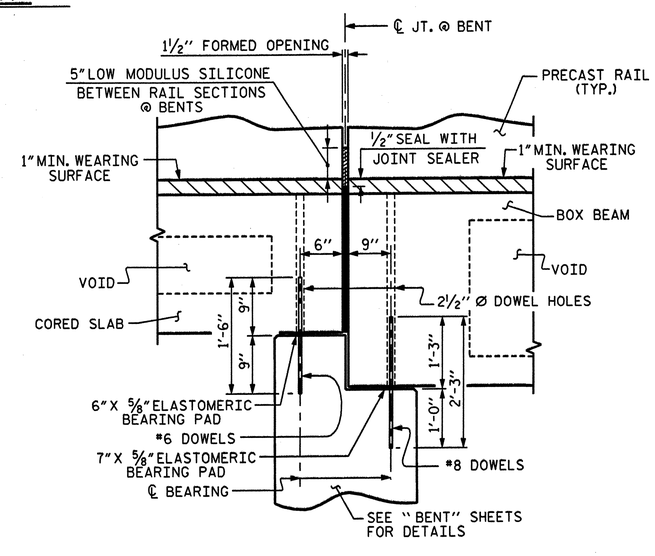

SECTION AT BENT

GENERAL NOTES

ASSUMED LIVE LOAD = HS 20 OR ALTERNATE LOADING.

STRUCTURAL STEEL ITEMS SHALL BE OF A GRADE CONFORMING TO EITHER ASTM A36 OR A373, EXCEPT HIGH STRENGTH BOLTS. HIGH STRENGTH BOLTS SHALL BE ASTM A325. ALL STRUCTURAL STEEL SHALL BE GALVANIZED AS PER THE SPECIFICATION.

ALL MATERIAL AND WORKMANSHIP SHALL COMPLY WITH THE APPLICABLE REQUIREMEMNTS OF THE STANDARD SPECIFICATIONS FOR ROADS AND STRUCTURES OF THE NC DEPARTMENT OF TRANSPORTATION DATED JANUARY 2002 AND WITH THE SPECIAL PROVISIONS.

UNLESS OTHERWISE NOTED ON THE PLANS, ALL EXPOSED CORNERS ON STRUCTURES SHALL BE CHAMFERED 3/4".

FOR ELASTOMERIC BEARINGS, SEE SPECIAL PROVISIONS.

EXPANSION JOINT MATERIAL SHALL MEET THE REQUIREMENTS OF AASHTO SPECIFICATION M153 TYPE I, II, OR III.

JOINT SEALER SHALL BE LOW MODULUS SILICONE SEALANT, SEE SECTION 1028-4 OF THE STANDARD SPECIFICATIONS.

WBS NO. 37661

FRANKLIN COUNTY

STATION: 16+35.39 -L-

REPLACES BRIDGE NO. 41

NORTH CAROLINA PROFESSIONAL SEAL 19831 ENGINEER DAVID R. SIMPSON, JR.
6-30-06

PLANS PREPARED BY:

SIMPSON ENGINEERS & ASSOCIATES
5520 Dillard Drive
Suite 120
Cary, NC 27518
(919) 852-0468
(919) 852-0598 (Fax)
www.simpsonengr.com

STATE OF NORTH CAROLINA
DEPARTMENT OF TRANSPORTATION
RALEIGH

TYPICAL SECTIONS & DETAILS

36' CLEAR ROADWAY - 90° SKEW

REVISIONS						SHEET NO.
NO.	BY:	DATE:	NO.	BY:	DATE:	40
1			3			TOTAL SHEETS
2			4			62

DRAWN BY : D. VESTER DATE : 5/06
CHECKED BY : M. AVERETTE DATE : 5/06

5/30/2006 3:31:52 PM g:\bmu\franklin41\drawings\nsmd5017b_sd_ts_01.dgn

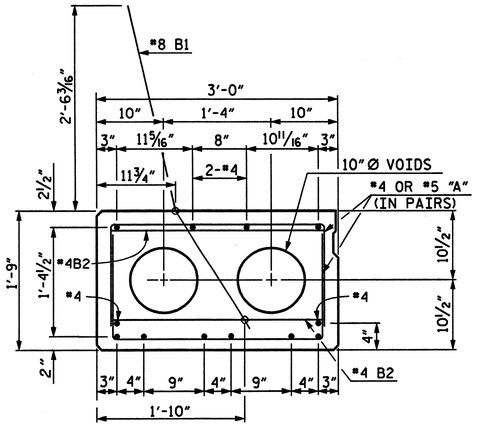

25' SPAN

8 - 1/2" Ø H.S. STRANDS
EXTERIOR SLAB SECTIONS

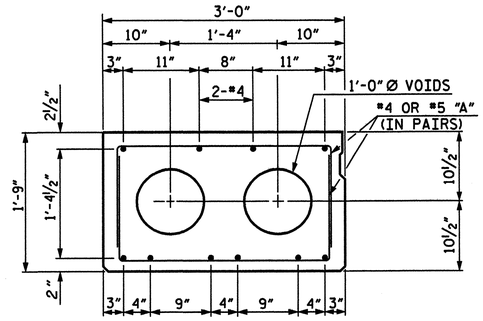

⚠ 25' SPAN

8 - 1/2" Ø H.S. STRANDS
INTERIOR SLAB SECTIONS

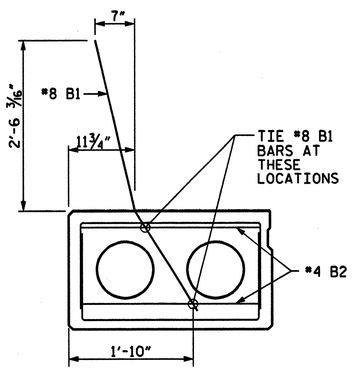

TIE LOCATION FOR #8 B1

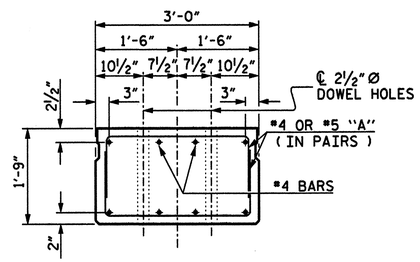

SLAB END ELEVATION

THE 2 1/2"Ø DOWEL HOLES AT EXPANSION ENDS OF SLAB SECTIONS SHALL BE FILLED WITH LOW MODULUS SILICONE MATERIAL TO 1 1/2" ABOVE TOP OF DOWELS AND THEN FILLED WITH GROUT, SEE SPECIAL PROVISIONS.

THE 2 1/2"Ø DOWEL HOLES AT FIXED ENDS OF SLAB SECTIONS SHALL BE FILLED WITH GROUT, SEE SPECIAL PROVISIONS.

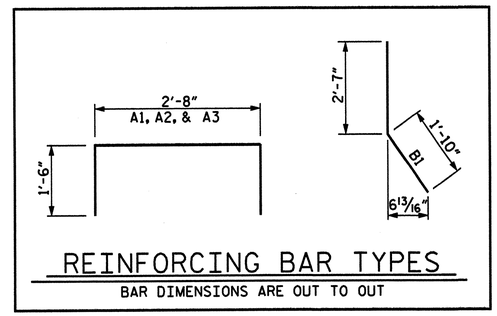

REINFORCING BAR TYPES

BAR DIMENSIONS ARE OUT TO OUT

INTERIOR SLAB UNIT	25'
CAMBER (SLAB UNIT ALONE IN PLACE)	1/8" (UP)
DEFLECTION (SUPERIMPOSED DEAD LOAD)	* 0" (DOWN)
FINAL DEFLECTION	1/8" (UP)
* INCLUDES FUTURE WEARING SURFACE	

EXTERIOR SLAB UNIT	25'
CAMBER (SLAB UNIT ALONE IN PLACE)	1/8" (UP)
DEFLECTION (SUPERIMPOSED DEAD LOAD)	* 0" (DOWN)
FINAL DEFLECTION	1/8" (UP)
* INCLUDES FUTURE WEARING SURFACE	

CORED SLAB NOTES

CONCRETE = f'c - 5000psi 25' SPAN ONLY (MIN. COMP. STRENGTH @ 28 DAYS).
f'ci - 4000psi 25' SPAN ONLY (MIN. COMP. STRENGTH @ TRANSFER OF STRESSING FORCE).

SIZE	TYPE	AREA	ULTIMATE STR.	APPLIED FORCE
1/2" Ø	HIGH STR.	0.153 SQ. IN. PER CABLE	41,300 LBS.	30,980 LBS. PER CABLE

JOINT SEALER SHALL BE LOW MODULUS SILICONE SEALANT. SEE SECTION 1028-4 OF THE STANDARD SPECIFICATIONS.

THE CONTRACTOR, AT HIS OPTION, MAY USE STRESS RELIEVED STRANDS IN LIEU OF LOW RELAXATION STRANDS. DESIGN AND STRAND PATTERN MUST PROVIDE AT LEAST THE SAME NET COMPRESSIVE STRESS AFTER THE LOSSES.

THE ULTIMATE STRENGTH OF THE CORED SLAB UNIT MUST MEET THE REQUIREMENTS OF THE APPLICABLE AASHTO SPECIFICATIONS. STRESS RELIEVED STRANDS SHALL BE TENSIONED AND ANCHORED AT A LOAD EQUAL TO 70% OF ITS ULTIMATE STRENGTH. THIS APPLIED PRESTRESSED FORCE SHALL BE SHOWN ON THE PLANS. SIZE OF STRESS RELIEVED STRANDS SHALL NOT BE SMALLER THAN THOSE SHOWN FOR LOW RELAXATION STRANDS. DESIGN AND DETAIL PLANS USING STRESS RELIEVED STRANDS MUST BE SUBMITTED TO THE ENGINEER. ANY ADDITIONAL COST DUE TO THE USE OF STRESS RELIEVED STRANDS WILL BE PAID FOR BY THE CONTRACTOR. STRANDS SHALL BE CUT FLUSH WITH THE ENDS OF THE SLABS AND EPOXY COATED. SEE SPECIAL PROVISIONS.

A POSITIVE HOLD-DOWN SYSTEM MUST BE EMPLOYED TO PREVENT VOIDS FROM RISING.

SPIRAL WIRE REINFORCEMENT MAY BE USED IN LIEU OF DEFORMED BARS FOR STIRRUPS. (MIN. W3.5 x 6" PITCH).

ALL PRESTRESSING STRANDS SHALL BE 7-WIRE LOW RELAXATION GRADE 270 STRANDS AND SHALL CONFORM TO AASHTO M203 EXCEPT FOR SAMPLING REQUIREMENTS WHICH SHALL BE IN ACCORDANCE WITH THE STANDARD SPECIFICATIONS.

ALL REINFORCING STEEL CAST WITH THE CORED SLAB SECTIONS SHALL BE GRADE 60 AND SHALL BE INCLUDED IN THE UNIT PRICE BID FOR PRESTRESSED CONCRETE CORED SLABS.

RECESSES FOR TRANSVERSE STRANDS SHALL BE GROUTED AFTER THE TENSIONING OF THE STRANDS.

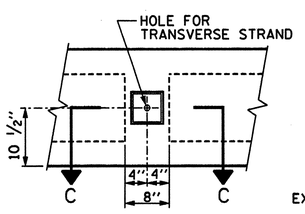

ELEVATION

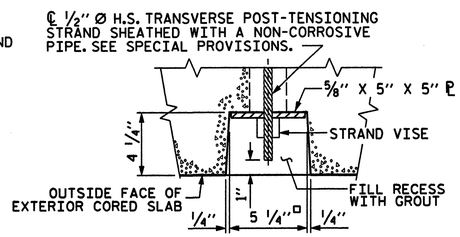

SECTION C-C

DETAIL A
GROUTED RECESS AT END OF POST-TENSIONED STRAND CORED SLAB

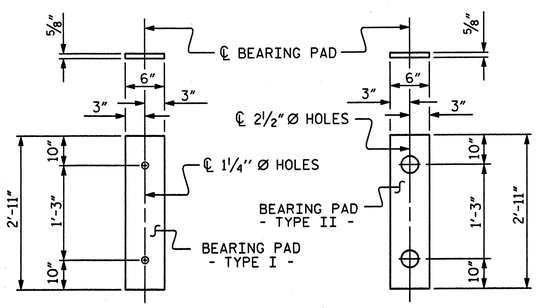

FIXED END
(TYPE I - 26 REQ'D)

EXPANSION END
(TYPE II - 26 REQ'D)

ELASTOMERIC BEARING DETAILS

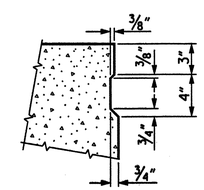

SHEAR KEY DETAIL

NOTE: OMIT SHEAR KEY ON OUTSIDE OF EXTERIOR CORED SLAB

⚠ REVISED TO SHOW CORRECT STRAND PATTERN IN 25' SPAN INTERIOR SLAB SECTION.

NORTH CAROLINA PROFESSIONAL SEAL 19631 ENGINEER DAVID G. SIMPSON, JR.
10-30-06

PLANS PREPARED BY:
SIMPSON ENGINEERS & ASSOCIATES
5520 Dillard Drive
Suite 120
Cary, NC 27518
(919) 852-0468
(919) 852-0598 (Fax)
www.simpsonengr.com

WBS NO. 37661
FRANKLIN COUNTY
STATION: 16+35.39 -L-

REPLACES BRIDGE NO. 41

STATE OF NORTH CAROLINA
DEPARTMENT OF TRANSPORTATION
RALEIGH

STANDARD
PRESTRESSED CORED SLAB DETAILS
25' SPAN
36' CLEAR ROADWAY - 90° SKEW

REVISIONS						SHEET NO.
NO.	BY:	DATE:	NO.	BY:	DATE:	41
1	MAA	10/30/06	3			TOTAL SHEETS
2			4			62

DRAWN BY : D. VESTER DATE : 5/06
CHECKED BY : M. AVERETTE DATE : 5/06

10/30/2006 4:41:41 PM g:\bmu\franklin41\drawings\ncmd5017b_sd_csd_01.dgn

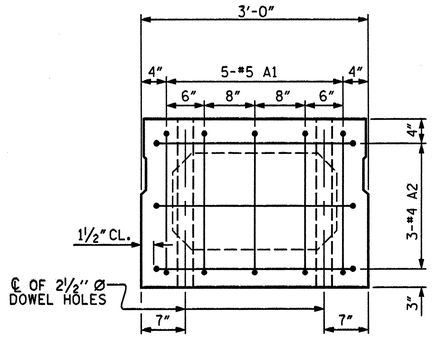

END ELEVATION

SHOWING PLACEMENT OF #5 & #4 "A" BARS AND LOCATION OF DOWEL HOLES. (INTERIOR BOX BEAM SECTION SHOWN-EXTERIOR SECTION SIMILAR EXCEPT SHEAR KEY LOCATION. STRAND LAYOUT NOT SHOWN.)

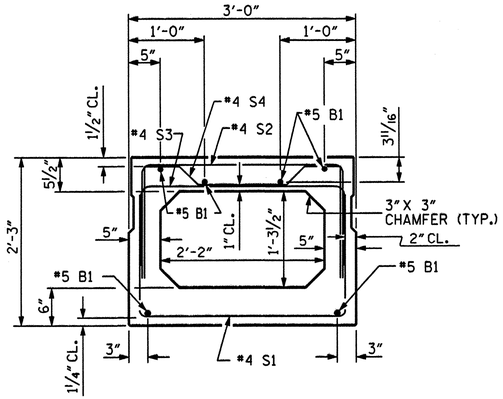

INTERIOR BOX BEAM SECTION

(STRAND LAYOUT NOT SHOWN)

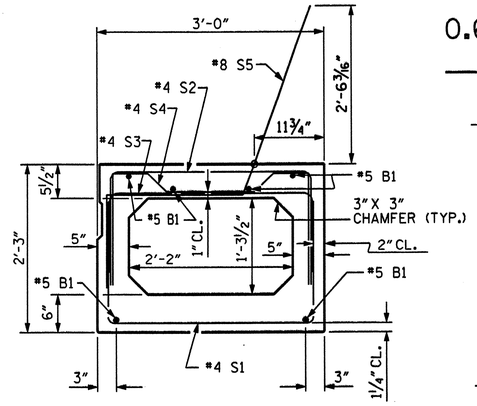

EXTERIOR BOX BEAM SECTION

(STRAND LAYOUT NOT SHOWN)

0.6" Ø LOW RELAXATION STRAND LAYOUT

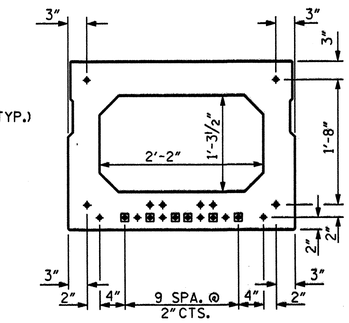

TYPICAL STRAND LOCATION

(20 STRANDS REQUIRED)

(INTERIOR BOX BEAM SECTION SHOWN-EXTERIOR SECTION SIMILAR EXCEPT SHEAR KEY LOCATION

DEBONDING LEGEND

- ● FULLY BONDED STRANDS
- ◉ STRANDS DEBONDED FOR 4'-0" FROM END OF BOX BEAM

BAR TYPES

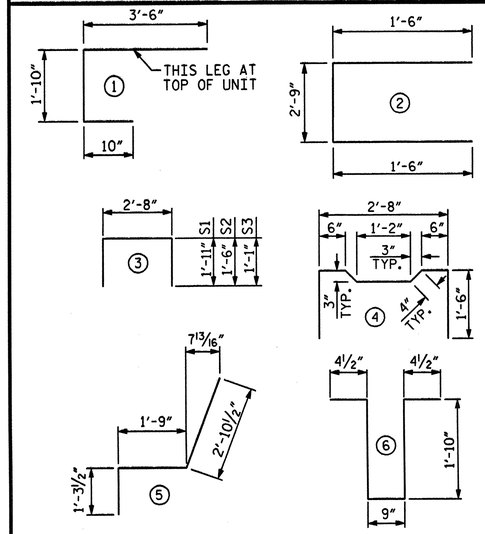

ALL BAR DIMENSIONS ARE OUT TO OUT

BILL OF MATERIAL FOR ONE BOX BEAM SECTION

BAR	NO.	SIZE	TYPE	EXTERIOR UNIT LENGTH	EXTERIOR UNIT WEIGHT	INTERIOR UNIT LENGTH	INTERIOR UNIT WEIGHT
A1	10	5	1	6'-2"	64	6'-2"	64
A2	14	4	2	5'-9"	54	5'-9"	54
B1	18	5	STR	24'-8"	463	24'-8"	463
D1	6	4	6	5'-2"	21	5'-2"	21
D2	4	4	STR	2'-7"	7	2'-7"	7
S1	58	4	3	6'-6"	252	6'-6"	252
S2	58	4	3	5'-8"	220	5'-8"	220
S3	99	4	3	4'-10"	320	4'-10"	320
S4	41	4	4	5'-10"	160	5'-10"	160
S5	56	8	5	5'-11"	885	--	--
REINFORCING STEEL					2446 LBS.		1561 LBS.
6000 P.S.I. CONCRETE					11.1 CU. YDS.		11.1 CU. YDS.
0.6" Ø L.R. STRANDS				NO.	20	NO.	20

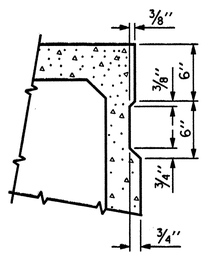

SHEAR KEY DETAIL

NOTE: OMIT SHEAR KEY ON OUTSIDE FACE OF EXTERIOR BOX BEAMS.

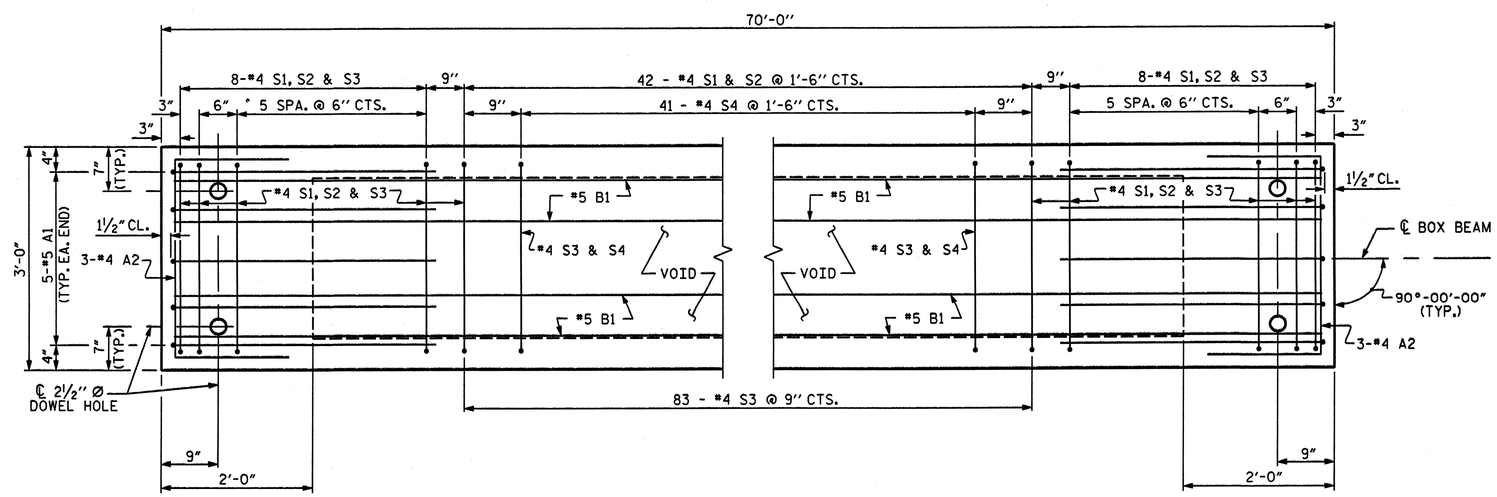

PLAN OF BOX BEAM

INTERIOR UNIT SHOWN, EXTERIOR UNIT SIMILAR.
FOR LOCATION OF #8 S5 BAR IN EXTERIOR UNIT SEE "PRESTRESSED CONCRETE BOX BEAM 70' SPAN" SHEET.
FOR LOCATION OF DIAPHRAGMS, SEE "PRESTRESSED CONCRETE BOX BEAM 70' SPAN" SHEET.
FOR REINFORCING STEEL IN DIAPHRAGMS, SEE DIAPHRAGM DETAILS.

WBS NO. 37661
FRANKLIN COUNTY
STATION: 16+35.39 -L-

REPLACES BRIDGE NO. 41 SHEET 1 OF 3

NORTH CAROLINA PROFESSIONAL SEAL 19831 ENGINEER DAVID A. SIMPSON, JR.
5-30-06

PLANS PREPARED BY:
SIMPSON ENGINEERS & ASSOCIATES
5520 Dillard Drive
Suite 120
Cary, NC 27518
(919) 852-0468
(919) 852-0598 (Fax)
www.simpsonengr.com

STATE OF NORTH CAROLINA
DEPARTMENT OF TRANSPORTATION
RALEIGH

3'-0" X 2'-3" PRESTRESSED CONCRETE BOX BEAM UNIT 70' SPAN

36' CLEAR ROADWAY - 90° SKEW

REVISIONS						SHEET NO.
NO.	BY:	DATE:	NO.	BY:	DATE:	42
1			3			TOTAL SHEETS
2			4			62

DRAWN BY : D. VESTER DATE : 5/06
CHECKED BY : M. AVERETTE DATE : 5/06

5/30/2006 3:31:52 PM g:\bmu\franklin41\drawings\nemo5017b_sd_bbd1_01.dgn

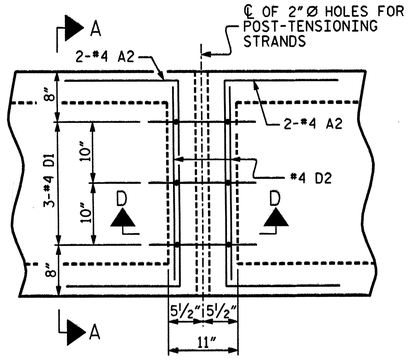

PLAN

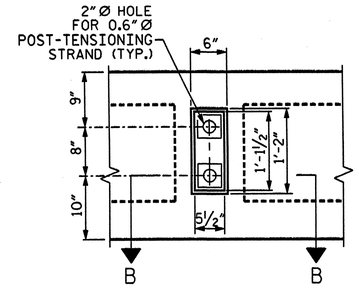

VIEW D-D

SHOWING ELEVATION VIEW OF GROUTED RECESS

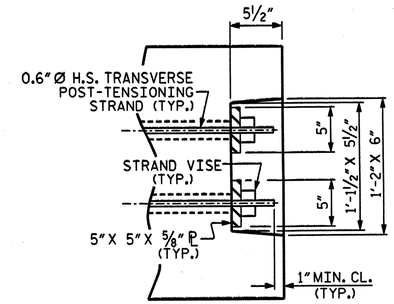

DETAIL "C"

THE ANCHOR PLATE SHALL BE GALVANIZED

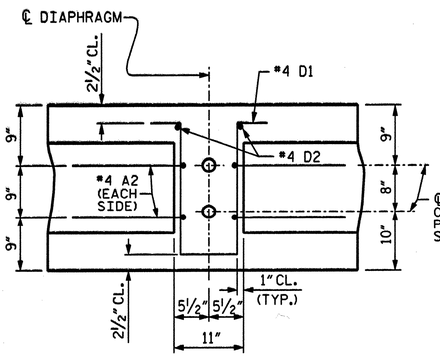

SECTION D-D

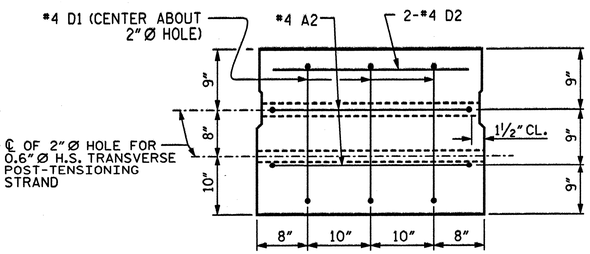

SECTION A-A

VOIDS NOT SHOWN

DOUBLE DIAPHRAGM DETAILS FOR 27" BOX BEAM

#4 "S" BARS NOT SHOWN. #4 "S" BARS MAY BE SHIFTED SLIGHTLY TO CLEAR 2" Ø HOLE.

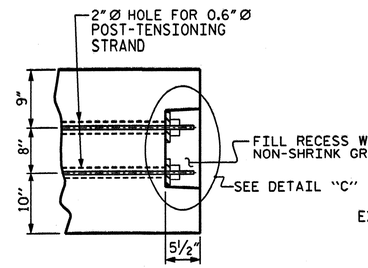

PART SECTION AT RECESS

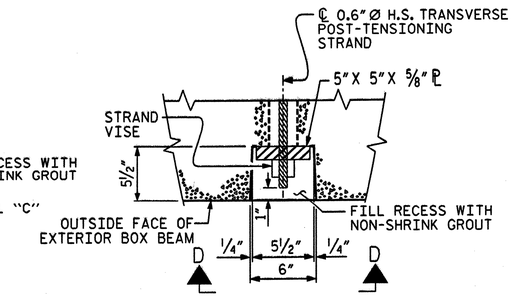

SECTION B-B

SHOWING PLAN VIEW OF GROUTED RECESS

DOUBLE GROUTED RECESS AT END OF POST-TENSIONED STRANDS OF EXTERIOR 27" BOX BEAM

WBS NO. 37661

FRANKLIN COUNTY

STATION: 16+35.39 -L-

REPLACES BRIDGE NO. 41 SHEET 2 OF 3

NORTH CAROLINA PROFESSIONAL SEAL 19831 ENGINEER DAVID R. SIMPSON, JR.

5-30-06

PLANS PREPARED BY:

SIMPSON ENGINEERS & ASSOCIATES

5520 Dillard Drive
Suite 120
Cary, NC 27518
(919) 852-0468
(919) 852-0598 (Fax)
www.simpsonengr.com

STATE OF NORTH CAROLINA
DEPARTMENT OF TRANSPORTATION
RALEIGH

3'-0" X 2'-3"
PRESTRESSED CONCRETE
BOX BEAM UNIT
70' SPAN
36' CLEAR ROADWAY - 90° SKEW

REVISIONS						SHEET NO.
NO.	BY:	DATE:	NO.	BY:	DATE:	43
1			3			TOTAL SHEETS
2			4			62

DRAWN BY : D. VESTER DATE : 5/06
CHECKED BY : M. AVERETTE DATE : 5/06

5/30/2006 3:31:52 PM g:\bmu\franklin41\drawings\ncma5017b_sd_bbd2_01.dgn

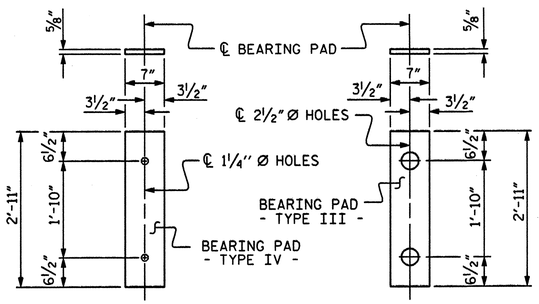

FIXED END
(TYPE IV - 13 REQ'D)

EXPANSION END
(TYPE III - 13 REQ'D)

ELASTOMERIC BEARING DETAILS

BOX BEAM UNITS REQUIRED			
	NUMBER	LENGTH	TOTAL LENGTH
SPAN B	13	70'-0"	910'-0"
TOTAL	13	——	910'-0"

GRADE 270 STRANDS	
	0.6" Ø L.R.
AREA (SQUARE INCHES)	0.217
ULTIMATE STRENGTH (LBS. PER STRAND)	58,600
APPLIED PRESTRESS (LBS. PER STRAND)	43,950

DEAD LOAD DEFLECTION AND CAMBER	
	3'-0" x 2'-3"
	0.6" Ø L.R. STRAND
	SPAN "B"
CAMBER (BEAM ALONE IN PLACE)	2 3/16" (UP)
DEFLECTION DUE TO SUPERIMPOSED DEAD LOAD**	9/16" (DOWN)
FINAL CAMBER	1 5/8" (UP)

** INCLUDES FUTURE WEARING SURFACE

BOX BEAM NOTES

ALL PRESTRESSING STRANDS SHALL BE 7-WIRE LOW RELAXATION GRADE 270 STRANDS AND SHALL CONFORM TO AASHTO M203 EXCEPT FOR SAMPLING REQUIREMENTS WHICH SHALL BE IN ACCORDANCE WITH THE STANDARD SPECIFICATIONS.

ALL REINFORCING STEEL CAST WITH THE BOX BEAM SECTIONS SHALL BE GRADE 60 AND SHALL BE INCLUDED IN THE UNIT PRICE BID FOR PRESTRESSED CONCRETE BOX BEAMS.

RECESSES FOR TRANSVERSE STRANDS SHALL BE GROUTED AFTER THE TENSIONING OF THE STRANDS.

THE 2½" Ø DOWEL HOLES AT FIXED ENDS OF BOX BEAM SECTIONS SHALL BE FILLED WITH NON-SHRINK GROUT. THE 2½" Ø DOWEL HOLES AT EXPANSION ENDS OF SLAB SECTIONS SHALL BE FILLED WITH JOINT SEALER MATERIAL TO 1½" ABOVE THE TOP OF DOWELS AND THEN FILLED WITH GROUT.

THE JOINT SEALER MATERIAL SHALL CONFORM TO THE REQUIREMENTS OF TYPE SL LOW MODULUS SILICONE SEALANT.

WHEN BOX BEAMS ARE CAST, A POSITIVE HOLD-DOWN SYSTEM SHALL BE EMPLOYED TO PREVENT VOIDS FROM RISING OR MOVING SIDEWAYS. THIS SYSTEM SHALL BE DESIGNED TO BE LEFT IN PLACE UNTIL THE CONCRETE HAS REACHED RELEASE STRENGTH. AT LEAST THREE WEEKS PRIOR TO CASTING BOX BEAMS, THE CONTRACTOR SHALL SUBMIT TO THE ENGINEER FOR REVIEW AND COMMENT, DETAILED DRAWINGS OF THE PROPOSED HOLD-DOWN SYSTEM. IN ADDITION TO STRUCTURAL DETAILS, LOCATION AND SPACING OF THE HOLD-DOWNS SHALL BE INDICATED.

PRESTRESSING STRANDS SHALL BE CUT FLUSH WITH THE BOX BEAM UNIT ENDS.

APPLY EPOXY PROTECTIVE COATING TO BOX BEAM UNIT ENDS. FOR EPOXY PROTECTIVE COATING, SEE SPECIAL PROVISIONS.

FOR PRESTRESSED CONCRETE BOX BEAMS, SEE SPECIAL PROVISIONS.

THE LOCATION OF THE VOID DRAINS MAY BE SHIFTED SLIGHTLY WHERE NECESSARY TO CLEAR PRESTRESSING STRANDS OR TRANSVERSE REINFORCING STEEL.

CONCRETE = f'c - 6000psi 70' SPAN ONLY (MIN. COMP. STRENGTH @ 28 DAYS).
f'ci - 5000psi 70' SPAN ONLY (MIN. COMP. STRENGTH @ TRANSFER OF STRESSING FORCE).

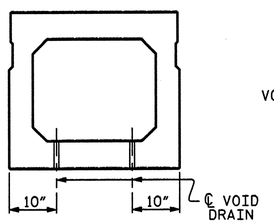

SECTION B-B

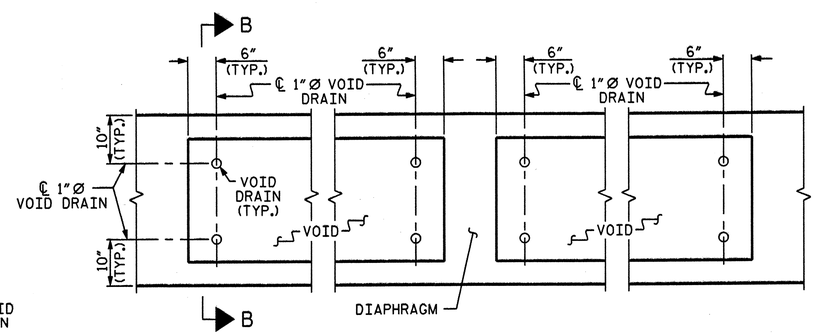

PART PLAN

VOID DRAIN DETAILS

(DIMENSIONS SHOWN ARE TYPICAL FOR EACH VOID)

WBS NO. 37661

FRANKLIN COUNTY

STATION: 16+35.39 -L-

REPLACES BRIDGE NO. 41 SHEET 3 OF 3

STATE OF NORTH CAROLINA
DEPARTMENT OF TRANSPORTATION
RALEIGH

3'-0' X 2'-3"
PRESTRESSED CONCRETE
BOX BEAM UNIT
70' SPAN
36' CLEAR ROADWAY - 90° SKEW

NORTH CAROLINA PROFESSIONAL SEAL 19831 ENGINEER DAVID B. SIMPSON, JR.
5-30-06

PLANS PREPARED BY:
SIMPSON ENGINEERS & ASSOCIATES
5520 Dillard Drive
Suite 120
Cary, NC 27518
(919) 852-0468
(919) 852-0598 (Fax)
www.simpsonengr.com

REVISIONS							
NO.	BY:	DATE:	NO.	BY:	DATE:		
1			3				
2			4				

SHEET NO. 44
TOTAL SHEETS 62

DRAWN BY : D. VESTER DATE : 5/06
CHECKED BY : M. AVERETTE DATE : 5/06

5/30/2006 3:31:51 PM g:\bmu\franklin41\drawings\ncmd5017b_sd_bbd3_01.dgn

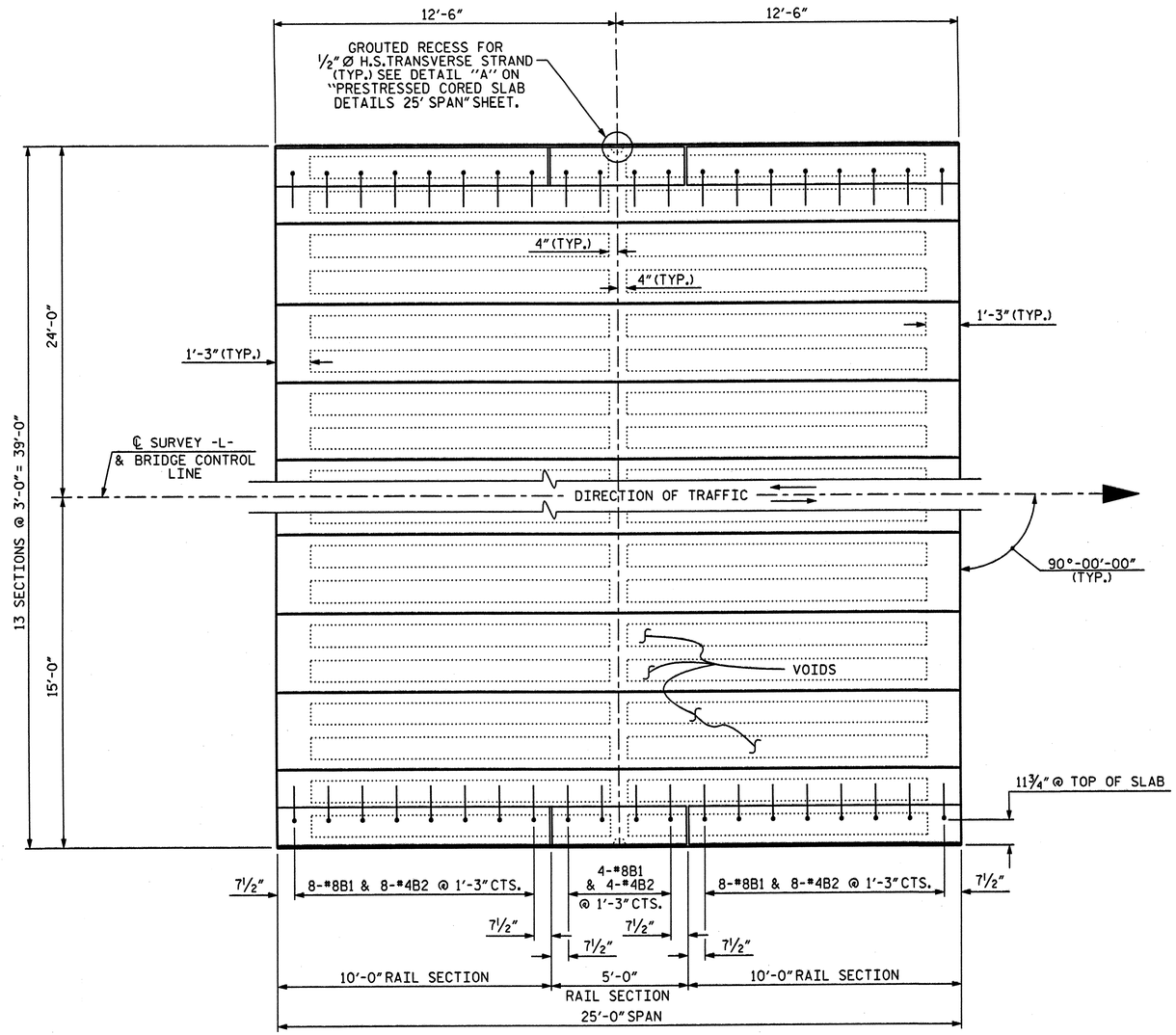

PLAN OF SPAN

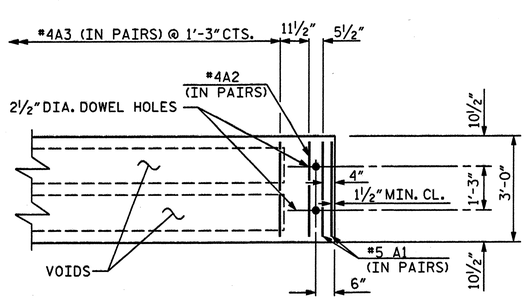

PART PLAN - SLAB SECTION

DRAWN BY : D. VESTER DATE : 5/06
CHECKED BY : M. AVERETTE DATE : 5/06

5/30/2006 3:31:51 PM gi:\bmu\franklin41\drawings\ncma5017b_sd_cs1_01.dgn

NORTH CAROLINA PROFESSIONAL SEAL 19831 ENGINEER DAVID B. SIMPSON, JR.
5-30-06

PLANS PREPARED BY:
SIMPSON ENGINEERS & ASSOCIATES
5520 Dillard Drive
Suite 120
Cary, NC 27518
(919) 852-0468
(919) 852-0598 (Fax)
www.simpsonengr.com

WBS NO. 37661
FRANKLIN COUNTY
STATION: 16+35.39 -L-
REPLACES BRIDGE NO. 41

STATE OF NORTH CAROLINA
DEPARTMENT OF TRANSPORTATION
RALEIGH

STANDARD

PRESTRESSED CORED SLAB
25' SPAN

36' CLEAR ROADWAY - 90° SKEW

REVISIONS						SHEET NO.
NO.	BY:	DATE:	NO.	BY:	DATE:	45
1			3			TOTAL SHEETS
2			4			62

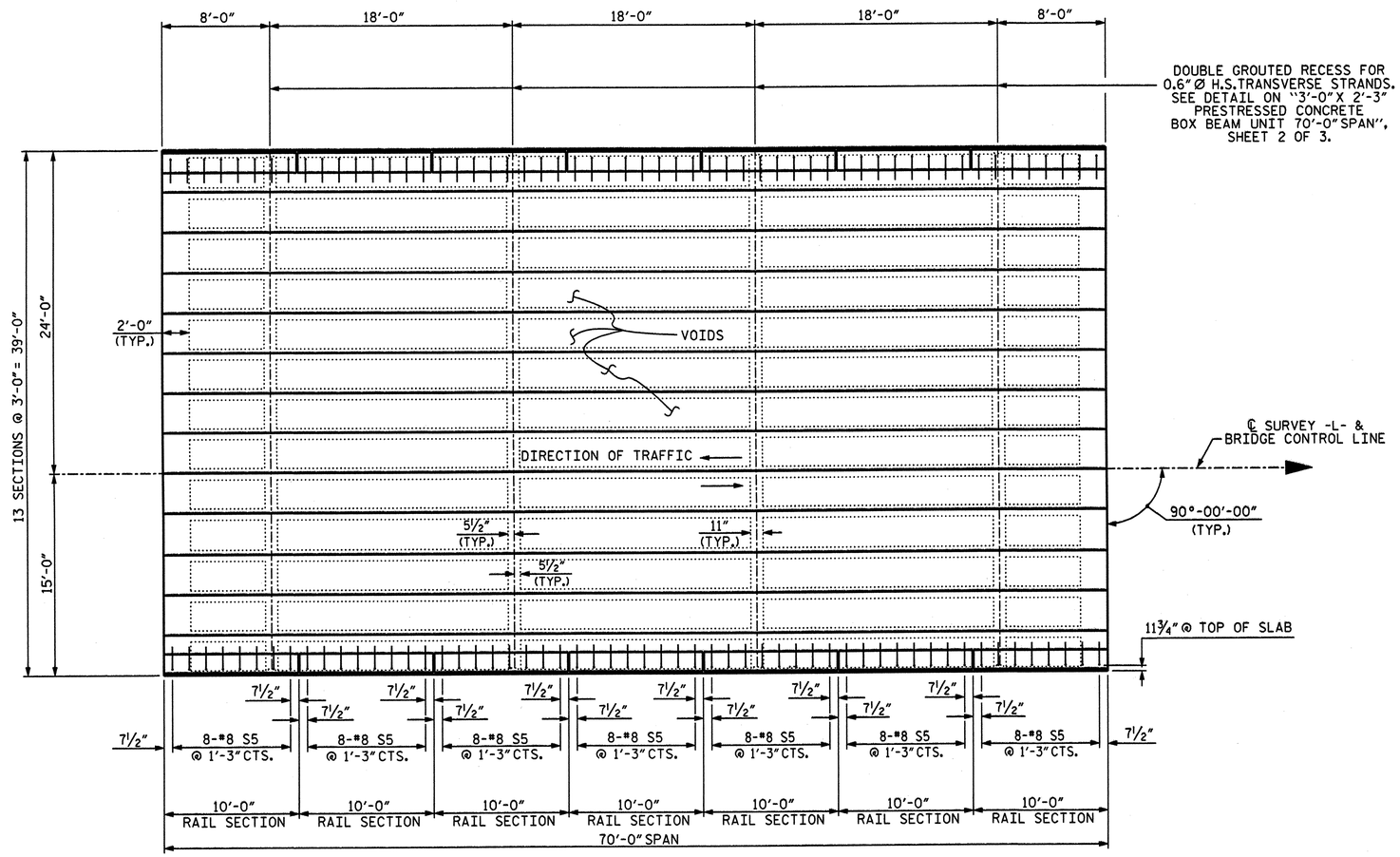

PLAN OF SPAN

WBS NO. 37661

FRANKLIN COUNTY

STATION: 16+35.39 -L-

REPLACES BRIDGE NO. 41

NORTH CAROLINA PROFESSIONAL SEAL 19831 ENGINEER DAVID L. SIMPSON, JR.

5-30-06

PLANS PREPARED BY:

SIMPSON ENGINEERS & ASSOCIATES

5520 Dillard Drive
Suite 120
Cary, NC 27518
(919) 852-0468
(919) 852-0598 (Fax)
www.simpsonengr.com

STATE OF NORTH CAROLINA
DEPARTMENT OF TRANSPORTATION
RALEIGH

STANDARD
PRESTRESSED CONCRETE
BOX BEAM
70' SPAN

36' CLEAR ROADWAY - 90° SKEW

REVISIONS						SHEET NO.
NO.	BY:	DATE:	NO.	BY:	DATE:	46
1			3			TOTAL SHEETS
2			4			62

DRAWN BY : D. VESTER DATE : 5/06
CHECKED BY : M. AVERETTE DATE : 5/06

5/30/2006 3:31:51 PM g:\bmu\franklin41\drawings\ncma501fb_sd_bb01_01.dgn

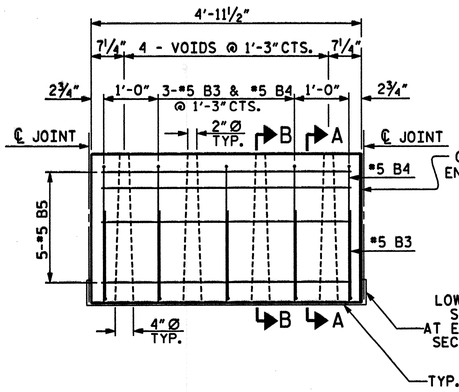

TYPICAL 5'-0" PRECAST UNIT

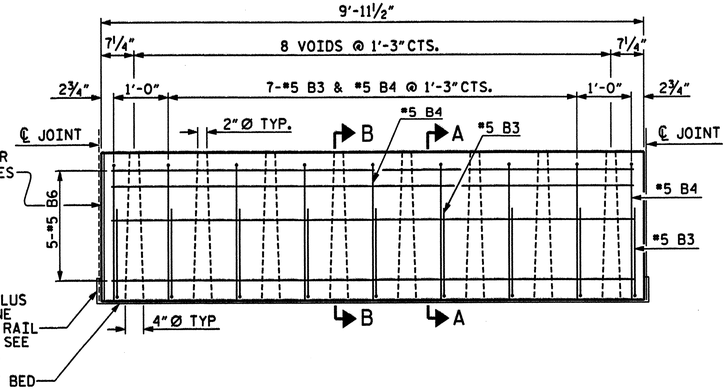

TYPICAL 10'-0" PRECAST UNIT

NOTES

EACH PRECAST RAIL UNIT SHALL BE CAST WITH CLASS AA CONCRETE.

RAIL TO BE FLUSH WITH CORED SLAB OR BOX BEAM UNITS AT EACH END OF SPAN.

EACH PRECAST RAIL UNIT SHALL BE SUPPLIED WITH LIFTING DEVICE(S). NO CABLES ARE TO BE WRAPPED AROUND THE RAIL UNITS FOR LIFTING.

THE EXPANSION JOINT SEALER SHALL BE LOW MODULUS SILICONE SEALANT. SEE SECTION 1028-4 OF THE STANDARD SPECIFICATIONS.

CONCRETE CHAMFERS:
UNLESS OTHERWISE NOTED ON THE PLANS, ALL EXPOSED CORNERS ON STRUCTURES SHALL BE CHAMFERED ¾" WITH THE FOLLOWING EXCEPTIONS: TOP CORNERS OF CURBS MAY BE ROUNDED TO 1½" RADIUS WHICH IS BUILT INTO CURB FORMS; CORNERS OF TRANSVERSE FLOOR EXPANSION JOINTS SHALL BE ROUNDED WITH A ¼" FINISHING TOOL UNLESS OTHERWISE REQUIRED ON PLANS; AND CORNERS OF EXPANSION JOINTS IN THE ROADWAY FACES AND TOPS OF CURBS AND SIDEWALKS SHALL BE ROUNDED TO A ¼" RADIUS WITH A FINISHING STONE OR TOOL UNLESS OTHERWISE ON PLANS.

GROUT SHALL BE 5" ABOVE GROUT BED BETWEEN RAIL SECTIONS EXCEPT AT BENTS WHERE LOW MODULUS SILICONE SHALL BE SUBSTITUTED IN PLACE OF GROUT.

BILL OF MATERIAL FOR ONE 5'-0" RAIL SECTION

BAR	NO.	SIZE	TYPE	LENGTH	WEIGHT
B3	5	#5	1	2'-8"	14
B4	5	#5	2	4'-11"	26
B5	5	#5	STR.	4'-7"	24
REINFORCING STEEL LBS. =					64
CLASS AA CONCRETE CU. YDS. =					0.5

BILL OF MATERIAL FOR ONE 10'-0" RAIL SECTION

BAR	NO.	SIZE	TYPE	LENGTH	WEIGHT
B3	9	#5	1	2'-8"	25
B4	9	#5	2	4'-11"	46
B6	5	#5	STR.	9'-7"	50
REINFORCING STEEL LBS. =					121
CLASS AA CONCRETE CU. YDS. =					1.0

BAR TYPES

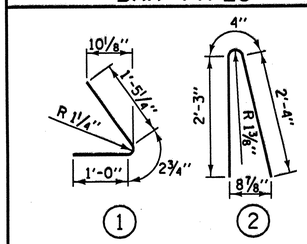

ALL BAR DIMENSIONS ARE OUT TO OUT

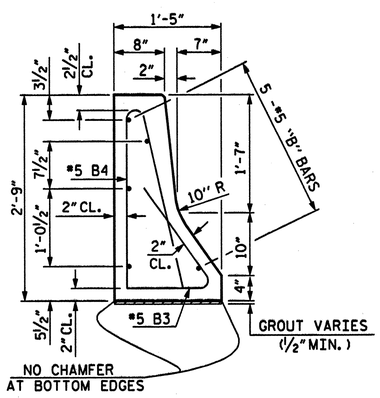

SECTION A-A

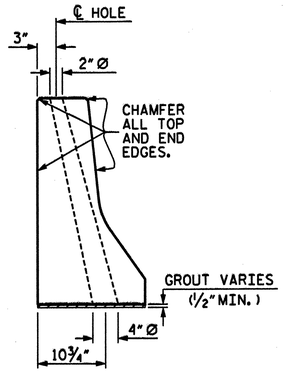

SECTION B-B

WBS NO. 37661

FRANKLIN COUNTY

STATION: 16+35.39 -L-

REPLACES BRIDGE NO. 41

STATE OF NORTH CAROLINA
DEPARTMENT OF TRANSPORTATION
RALEIGH

PRECAST CONCRETE BARRIER RAIL SECTIONS 25' & 70' SPAN

36' CLEAR ROADWAY - 90° SKEW

NORTH CAROLINA PROFESSIONAL SEAL 19831 ENGINEER DAVID B. SIMPSON, JR.
5-30-06

PLANS PREPARED BY:

SIMPSON ENGINEERS & ASSOCIATES
5520 Dillard Drive
Suite 120
Cary, NC 27518
(919) 852-0468
(919) 852-0598 (Fax)
www.simpsonengr.com

REVISIONS								SHEET NO.
NO.	BY:	DATE:	NO.	BY:	DATE:			47
1			3					TOTAL SHEETS
2			4					62

DRAWN BY : D. VESTER DATE : 5/06
CHECKED BY : M. AVERETTE DATE : 5/06

5/30/2006 3:31:51 PM g:\bmu\franklin41\drawings\ncmd5017b_sd_br_01.dgn

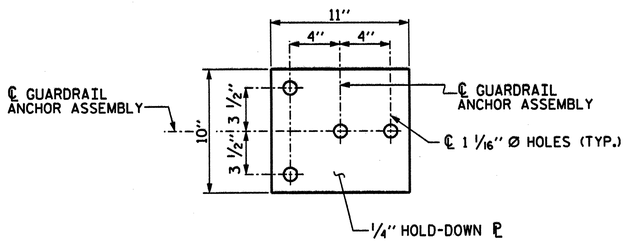

PLAN

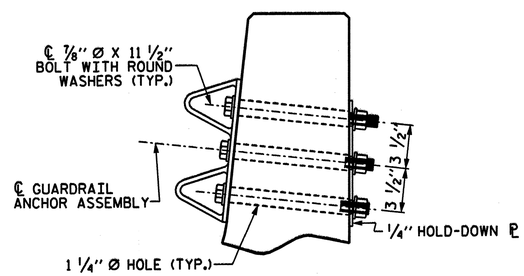

GUARDRAIL ANCHOR ASSEMBLY DETAILS

NOTES

THE GUARDRAIL ANCHOR ASSEMBLY SHALL CONSIST OF A 1/4" HOLD DOWN PLATE AND 4 - 7/8" Ø BOLTS WITH NUTS AND WASHERS.

THE HOLD-DOWN PLATE SHALL CONFORM TO AASHTO M270 GRADE 36. AFTER FABRICATION, THE HOLD-DOWN PLATE SHALL BE HOT-DIP GALVANIZED IN ACCORDANCE WITH AASHTO M111.

BOLTS SHALL CONFORM TO THE REQUIREMENTS OF ASTM A307 AND NUTS SHALL CONFORM TO THE REQUIREMENTS OF AASHTO M291. BOLTS, NUTS AND WASHERS SHALL BE GALVANIZED. (AT THE CONTRACTOR'S OPTION, STAINLESS STEEL BOLTS, NUTS AND WASHERS MAY BE USED AS AN ALTERNATE FOR THE 7/8" Ø GALVANIZED BOLTS, NUTS AND WASHERS. THEY SHALL CONFORM TO OR EXCEED THE MECHANICAL REQUIREMENTS OF ASTM A307. THE USE OF THIS ALTERNATE SHALL BE APPROVED BY THE ENGINEER.)

THE GUARDRAIL ANCHOR ASSEMBLY IS REQUIRED AT ALL POINTS WHERE APPROACH GUARDRAIL IS TO BE ATTACHED TO THE END OF BARRIER RAIL.

AFTER INSTALLATION, THE EXPOSED THREAD OF THE BOLT SHALL BE BURRED WITH A SHARP POINTED TOOL.

THE COST OF THE GUARDRAIL ANCHOR ASSEMBLIES WITH BOLTS, NUTS AND WASHERS COMPLETE IN PLACE, SHALL BE INCLUDED IN THE LUMP SUM PRICE FOR GUARDRAIL.

THE 1 1/4" Ø HOLES SHALL BE FORMED OR DRILLED WITH A CORE BIT. IMPACT TOOLS WILL NOT BE PERMITTED. ANY CONCRETE DAMAGED BY THIS WORK SHALL BE REPAIRED TO THE SATISFACTION OF THE ENGINEER.

FOR ADDITIONAL GUARDRAIL INFORMATION, SEE "GUARDRAIL ANCHOR UNIT" SHEET.

WBS NO. 37661

FRANKLIN COUNTY

STATION: 16+35.39 -L-

REPLACES BRIDGE NO. 41

NORTH CAROLINA PROFESSIONAL SEAL 19831 ENGINEER DAVID E. SIMPSON, JR.

5-30-06

PLANS PREPARED BY:

SIMPSON ENGINEERS & ASSOCIATES

5520 Dillard Drive
Suite 120
Cary, NC 27518
(919) 852-0468
(919) 852-0598 (Fax)
www.simpsonengr.com

STATE OF NORTH CAROLINA
DEPARTMENT OF TRANSPORTATION
RALEIGH

GUARDRAIL ANCHORAGE FOR BARRIER RAIL

36' CLEAR ROADWAY - 90° SKEW

REVISIONS						SHEET NO.
NO.	BY:	DATE:	NO.	BY:	DATE:	48
1			3			TOTAL SHEETS
2			4			62

DRAWN BY : D. VESTER DATE : 5/06
CHECKED BY : M. AVERETTE DATE : 5/06

5/30/2006 3:31:51 PM G:\BMU\Franklin41\Drawings\NCMA5017B_sd_gr_01.dgn

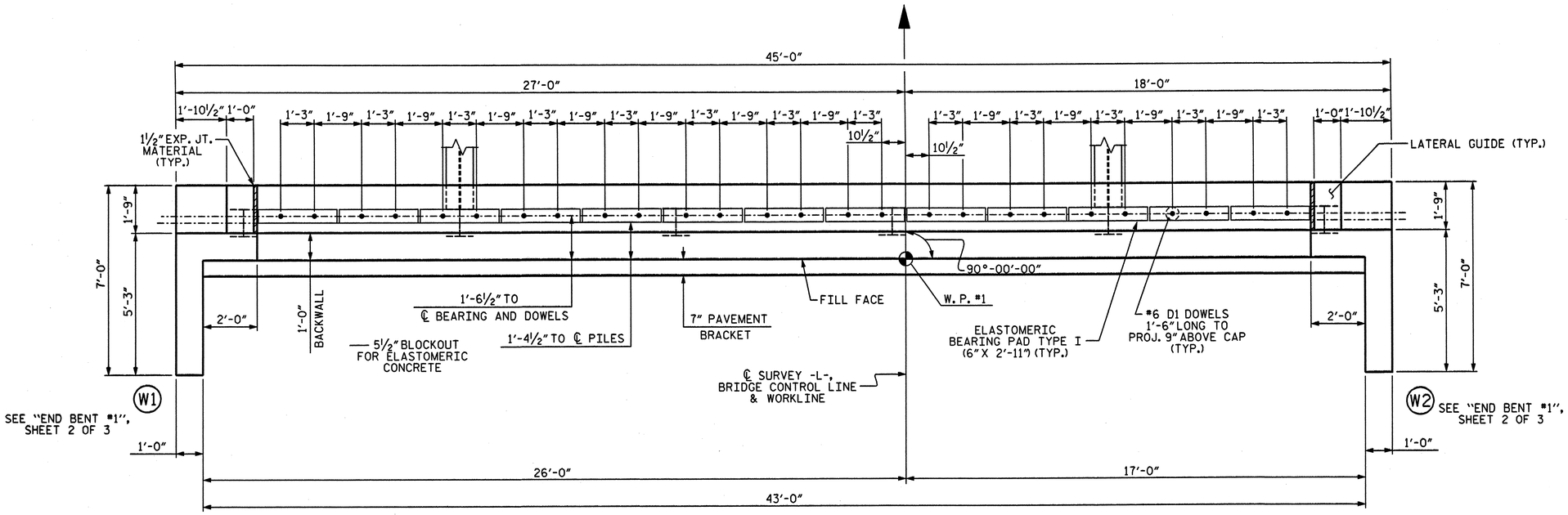

PLAN

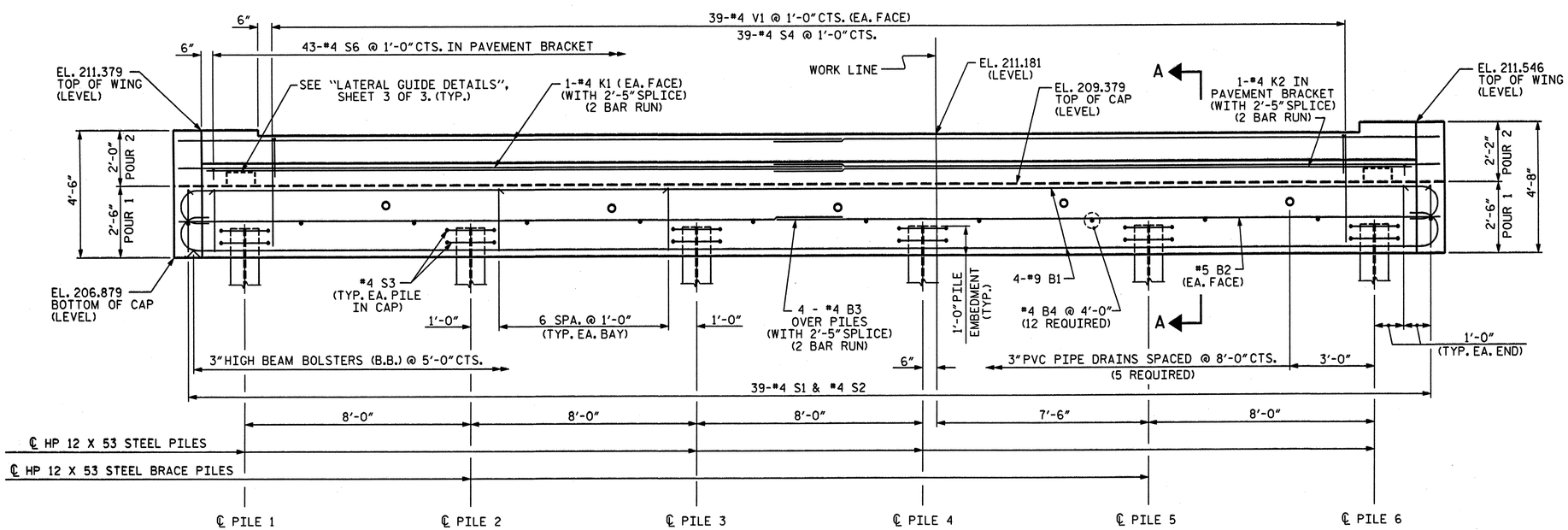

ELEVATION

NOTES

STIRRUPS IN CAP MAY BE SHIFTED AS NECESSARY TO CLEAR #6 D1 DOWELS.

PIPE DRAINS MAY BE SHIFTED SLIGHTLY AS NECESSARY TO CLEAR REINFORCING STEEL AND DOWELS.

WBS NO. 37661

FRANKLIN COUNTY

STATION: 16+35.39 -L-

REPLACES BRIDGE NO. 41 SHEET 1 OF 3

STATE OF NORTH CAROLINA
DEPARTMENT OF TRANSPORTATION
RALEIGH

SUBSTRUCTURE

END BENT #1

36' CLEAR ROADWAY - 90° SKEW

NORTH CAROLINA PROFESSIONAL SEAL 19831 ENGINEER DAVID B. SIMPSON, JR.
5-30-06

PLANS PREPARED BY:

SIMPSON ENGINEERS & ASSOCIATES
5520 Dillard Drive
Suite 120
Cary, NC 27518
(919) 852-0468
(919) 852-0598 (Fax)
www.simpsonengr.com

REVISIONS						
NO.	BY:	DATE:	NO.	BY:	DATE:	
1			3			
2			4			

SHEET NO. 49

TOTAL SHEETS 62

DRAWN BY : D. VESTER DATE : 5/06
CHECKED BY : M. AVERETTE DATE : 5/06

5/30/2006 3:31:51 PM G:\BMU\Franklin41\Drawings\NCMA5017B_sd_eb1a_01.dgn

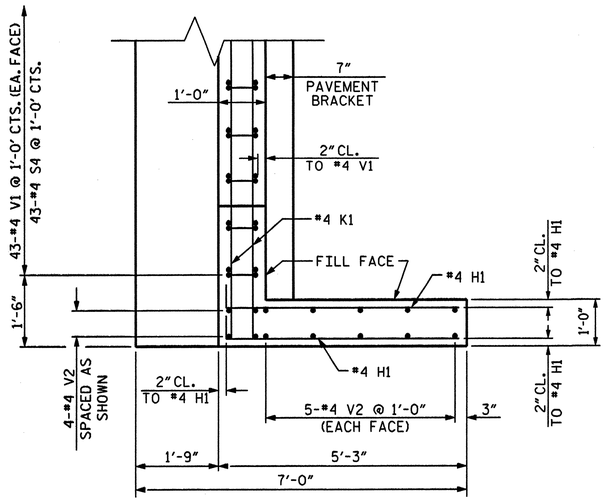

W1 PLAN OF LEFT WING

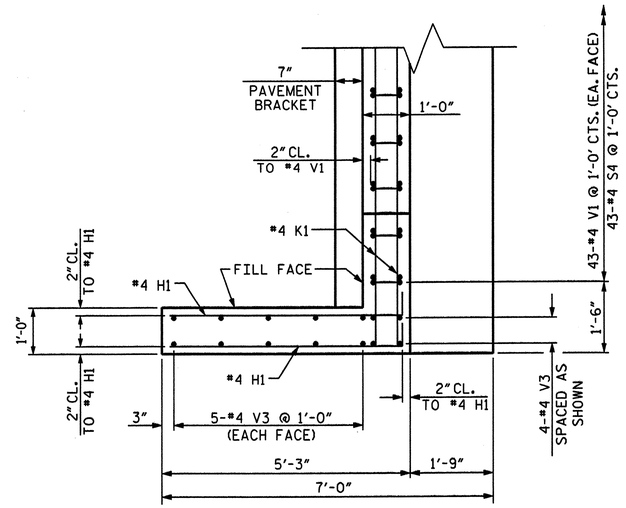

W2 PLAN OF RIGHT WING

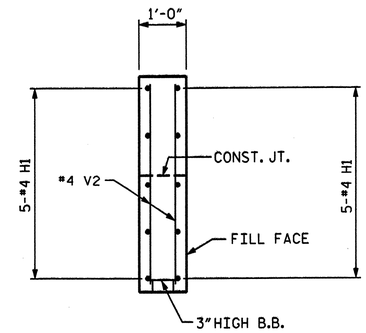

SECTION X-X

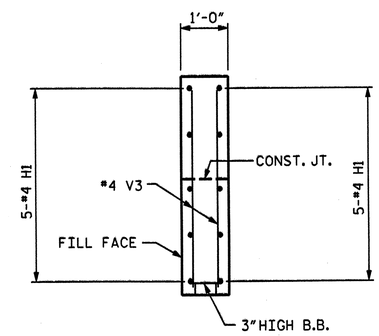

SECTION Y-Y

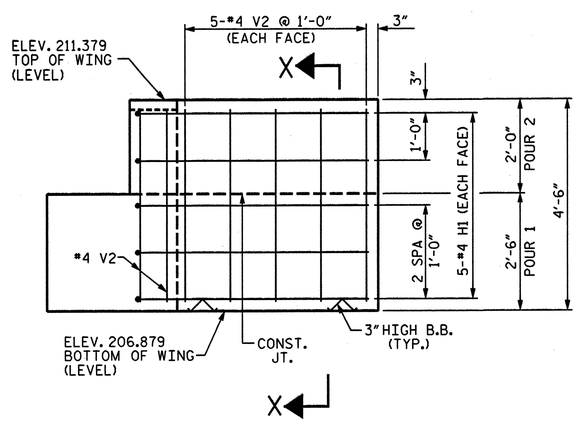

W1 ELEVATION OF LEFT WING

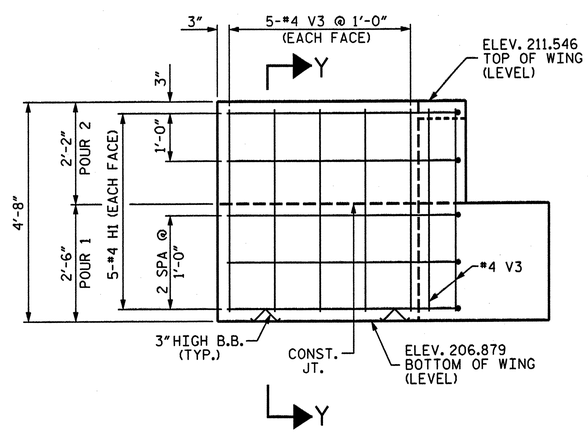

W2 ELEVATION OF RIGHT WING

WBS NO. 37661

FRANKLIN COUNTY

STATION: 16+35.39 -L-

REPLACES BRIDGE NO. 41 SHEET 2 OF 3

STATE OF NORTH CAROLINA
DEPARTMENT OF TRANSPORTATION
RALEIGH

SUBSTRUCTURE

END BENT #1

36' CLEAR ROADWAY - 90° SKEW

NORTH CAROLINA PROFESSIONAL SEAL 19831 ENGINEER DAVID B. SIMPSON, JR.
5-30-06

PLANS PREPARED BY:

SIMPSON ENGINEERS & ASSOCIATES
5520 Dillard Drive
Suite 120
Cary, NC 27518
(919) 852-0468
(919) 852-0598 (Fax)
www.simpsonengr.com

REVISIONS							SHEET NO.
NO.	BY:	DATE:	NO.	BY:	DATE:		50
1			3				TOTAL SHEETS
2			4				62

DRAWN BY : D. VESTER DATE : 5/06
CHECKED BY : M. AVERETTE DATE : 5/06

5/30/2006 3:31:50 PM g:\bmu\franklin41\drawings\ncma5017b_sd_ebib_01.dgn

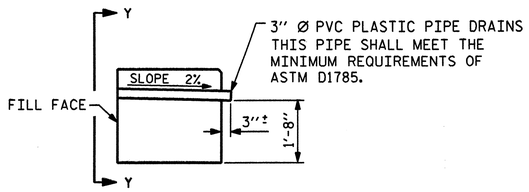

SECTION THRU CAP

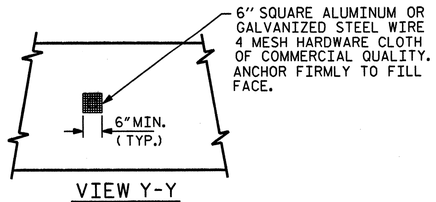

VIEW Y-Y

NOTE: NO SEPARATE PAYMENT WILL BE MADE FOR FURNISHING AND INSTALLING THE PVC PLASTIC PIPE DRAINS, HARDWARE CLOTH AND FASTENERS. THE ENTIRE COST OF THIS WORK SHALL BE INCLUDED IN THE LUMP SUM BID PRICE FOR PLAECMENT OF SUBSTRUCTURE.

PIPE DRAIN DETAILS

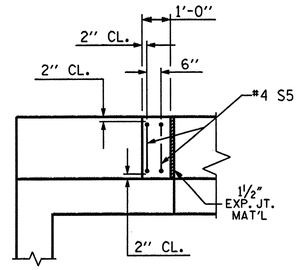

PLAN

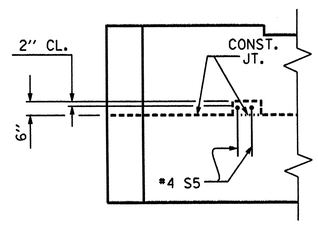

ELEVATION

LATERAL GUIDE DETAILS

BAR TYPES

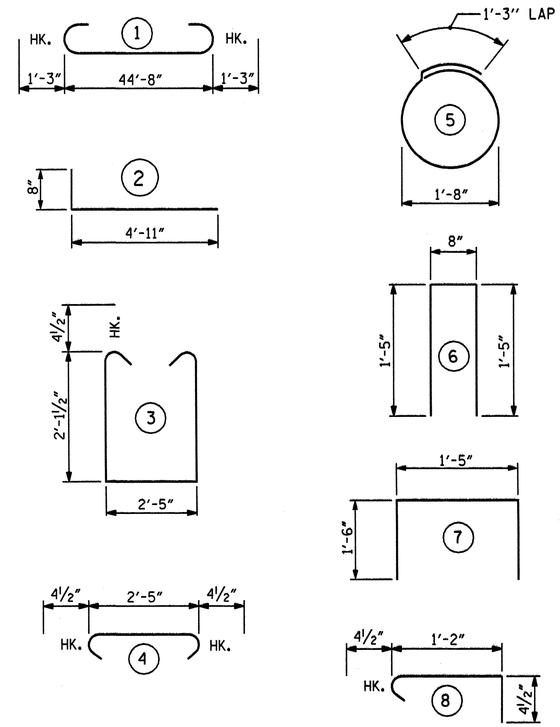

ALL BAR DIMENSIONS ARE OUT TO OUT

BILL OF MATERIAL

END BENT #1

BAR	NO.	SIZE	TYPE	LENGTH	WEIGHT
B1	8	9	1	47'-2"	1283
B2	2	5	STR	44'-8"	93
B3	8	4	STR	23'-7"	126
B4	12	4	STR	2'-5"	19
D1	26	6	STR	1'-6"	59
H1	20	4	2	5'-7"	75
K1	8	4	STR	23'-7"	126
K2	2	4	STR	22'-7"	30
S1	39	4	3	7'-5"	193
S2	39	4	4	3'-2"	82
S3	12	4	5	6'-6"	52
S4	43	4	6	3'-6"	101
S5	4	4	7	4'-5"	12
S6	43	4	8	1'-11"	55
V1	86	4	STR	3'-10"	220
V2	14	4	STR	4'-1"	38
V3	14	4	STR	4'-3"	40

TOTAL REINFORCING STEEL 2604 LBS.

CLASS "A" CONCRETE BREAKDOWN	
POUR #1	12.2 CU. YDS.
POUR #2	3.8 CU. YDS.
TOTAL	16.0 CU. YDS.

HP 12 X 53 STEEL PILES
6 PILES REQUIRED - LIN. FEET 180.0

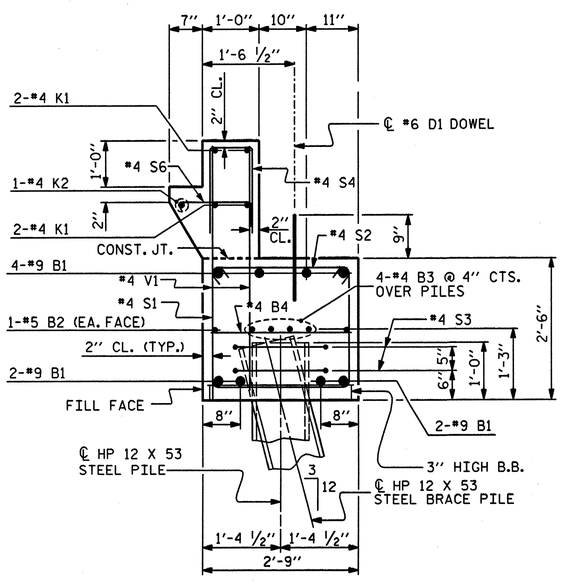

SECTION A-A

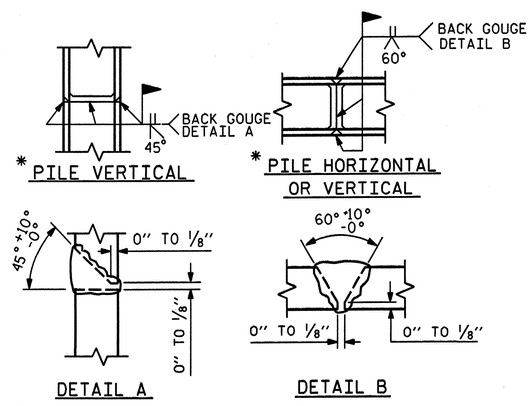

PILE SPLICE DETAILS

* POSITION OF PILE DURING WELDING.

WBS NO. 37661

FRANKLIN COUNTY

STATION: 16+35.39 -L-

REPLACES BRIDGE NO. 41 SHEET 3 OF 3

STATE OF NORTH CAROLINA
DEPARTMENT OF TRANSPORTATION
RALEIGH

SUBSTRUCTURE

END BENT #1

36' CLEAR ROADWAY - 90° SKEW

NORTH CAROLINA PROFESSIONAL SEAL 19831 ENGINEER DAVID B. SIMPSON, JR.
5-30-06

PLANS PREPARED BY:

SIMPSON ENGINEERS & ASSOCIATES
5520 Dillard Drive
Suite 120
Cary, NC 27518
(919) 852-0468
(919) 852-0598 (Fax)
www.simpsonengr.com

REVISIONS							SHEET NO.
NO.	BY:	DATE:	NO.	BY:	DATE:		51
1			3				TOTAL SHEETS
2			4				62

DRAWN BY : D. VESTER DATE : 5/06
CHECKED BY : M. AVERETTE DATE : 5/06

5/30/2006 3:31:50 PM g:\bmu\franklin41\drawings\ncmd5017b_sd_ebtc_01.dgn

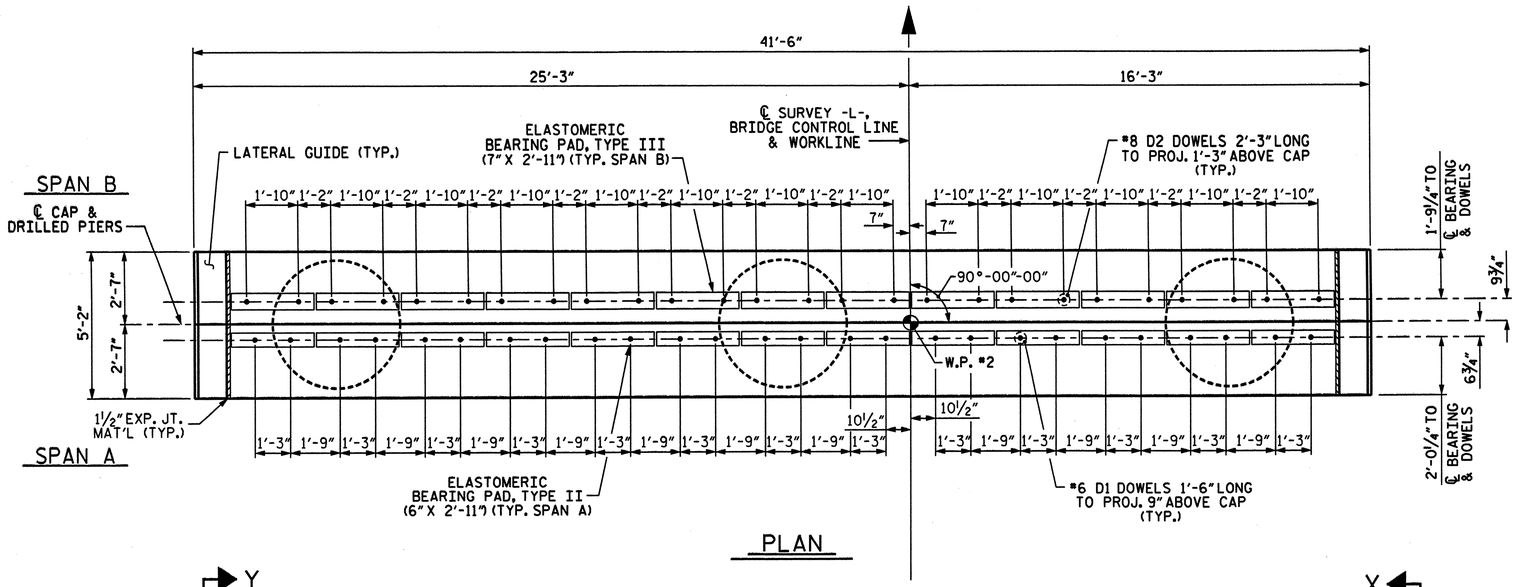

PLAN

NOTES:

STIRRUPS IN THE CAP MAY BE SHIFTED AS NECESSARY TO CLEAR #6 D1 OR #8 D2 DOWELS.

HOOKS ON "M" BARS MAY BE TURNED AS NECESSARY FOR PLACING REINFORCING STEEL.

ALL STEEL IN THE DRILLED PIERS IS INCLUDED IN THE PAY ITEM FOR "REINFORCING STEEL" AND "SPIRAL COLUMN REINFORCING STEEL".

FOR DRILLED PIERS, SEE SPECIAL PROVISIONS.

FOR PERMANENT STEEL CASING, SEE SPECIAL PROVISIONS FOR DRILLED PIERS.

INVERT ALTERNATE STIRRUPS.

NO SEPARATE PAYMENT SHALL BE MADE FOR ANY ADDITIONAL STEEL REQUIRED IN CONSTRUCTION OF THE DRILLED PIER AS THIS IS CONSIDERED INCIDENTAL TO THE LINEAR FOOT PRICE FOR DRILLED PIER.

THE CONTRACTORS ATTENTION IS CALLED TO THE FACT THAT THE LONGITUDINAL REINFORCEMENT FOR THE DRILLED PIER IS DETAILED WITH THREE FEET OF EXTRA LENGTH.

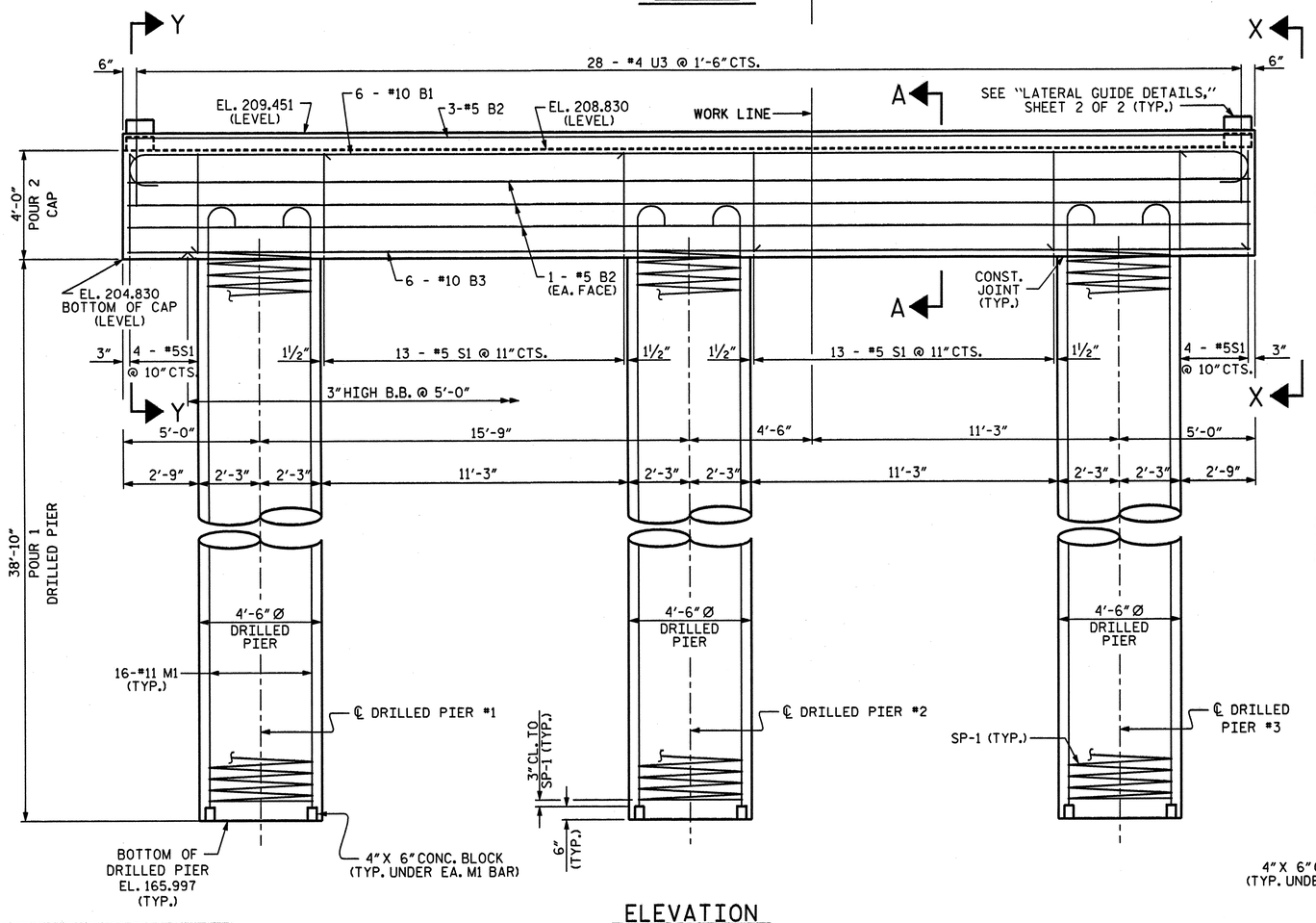

ELEVATION

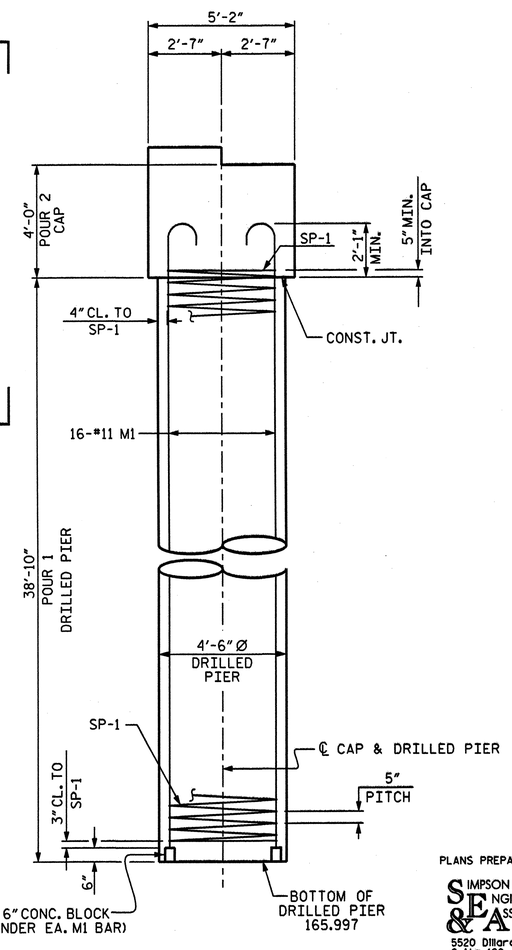

END ELEVATION

PLANS PREPARED BY:
SIMPSON ENGINEERS & ASSOCIATES
5520 Dillard Drive
Suite 120
Cary, NC 27518
(919) 852-0468
(919) 852-0598 (Fax)
www.simpsonengr.com

NORTH CAROLINA PROFESSIONAL SEAL 19831 ENGINEER DAVID [illegible] JR. 5-30-06

WBS NO. 37661

FRANKLIN COUNTY

STATION: 16+35.39 -L-

REPLACES BRIDGE NO. 41 SHEET 1 OF 2

STATE OF NORTH CAROLINA
DEPARTMENT OF TRANSPORTATION
RALEIGH

SUBSTRUCTURE

BENT #1

36' CLEAR ROADWAY - 90° SKEW

REVISIONS						SHEET NO.
NO.	BY:	DATE:	NO.	BY:	DATE:	52
1			3			TOTAL SHEETS
2			4			62

DRAWN BY : D. VESTER DATE : 5/06
CHECKED BY : M. AVERETTE DATE : 5/06

5/30/2006 3:31:50 PM g:\bmu\franklin41\drawings\ncma50170_sd_bla_01.dgn

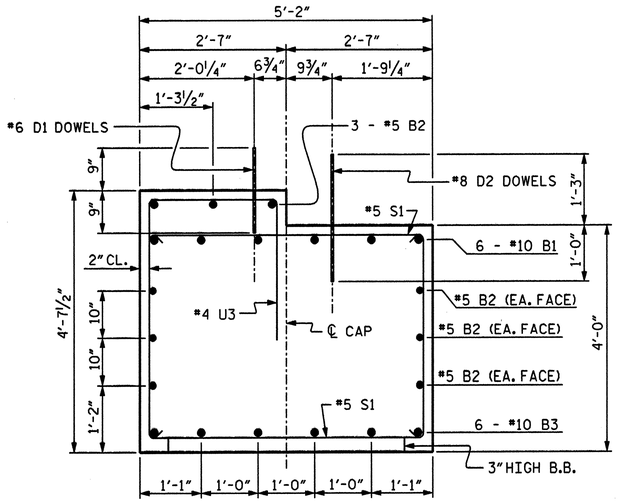

SECTION A-A

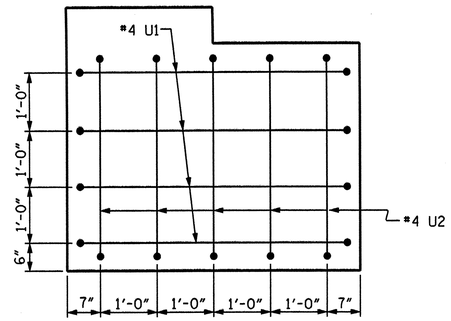

SECTION X-X

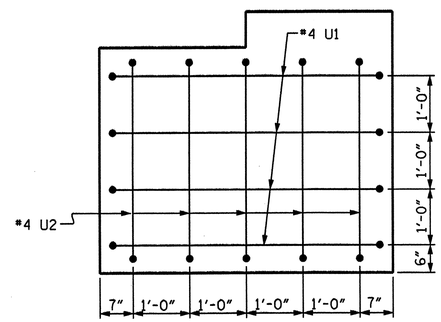

SECTION Y-Y

BAR TYPES

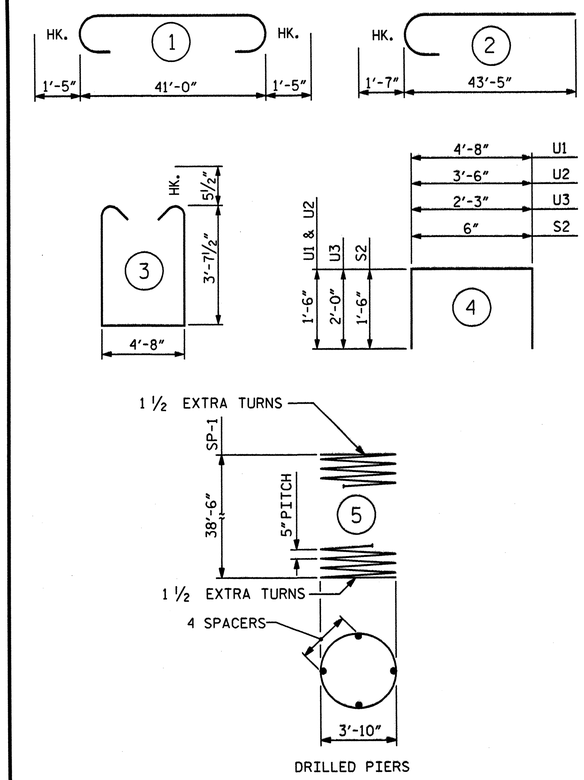

DRILLED PIERS

ALL BAR DIMENSIONS ARE OUT TO OUT

BILL OF MATERIAL

BENT #1

BAR	NO.	SIZE	TYPE	LENGTH	WEIGHT
B1	6	10	1	43'-10"	1132
B2	9	5	STR	41'-0"	385
B3	6	10	STR	41'-0"	1059
B4	8	4	STR	2'-3"	12
D1	26	6	STR	1'-6"	59
D2	26	8	STR	2'-3"	156
M1	48	11	2	45'-0"	11476
S1	34	5	3	12'-10"	455
S2	12	4	4	3'-6"	28
U1	8	4	4	7'-8"	41
U2	10	4	4	6'-6"	43
U3	28	4	4	6'-3"	117
SP-1	3	✱✱	5	1134'-0"	3548

REINFORCING STEEL 14963 LBS.

SPIRAL REINFORCING STEEL 3548 LBS.

CLASS "A" CONCRETE BREAKDOWN
POUR #2 (CAP & LAT. GUIDES) 34.4 CU. YDS.

DRILLED PIER QUANTITIES

DRILLED PIER CONCRETE
POUR #1 (DRILLED PIER) 68.6 CU. YDS.

4'-6" Ø DRILLED PIERS IN SOIL 101.5 LIN. FT.

4'-6" Ø DRILLED PIERS
NOT IN SOIL 15.0 LIN. FT.

4'-6" Ø PERMANENT STEEL CASING 86.0 LIN. FT.

✱✱ THE SP-1 SPIRAL REINFORCING STEEL SHALL BE W31 OR D-31 COLD DRAWN WIRE OR #5 PLAIN OR DEFORMED BAR.

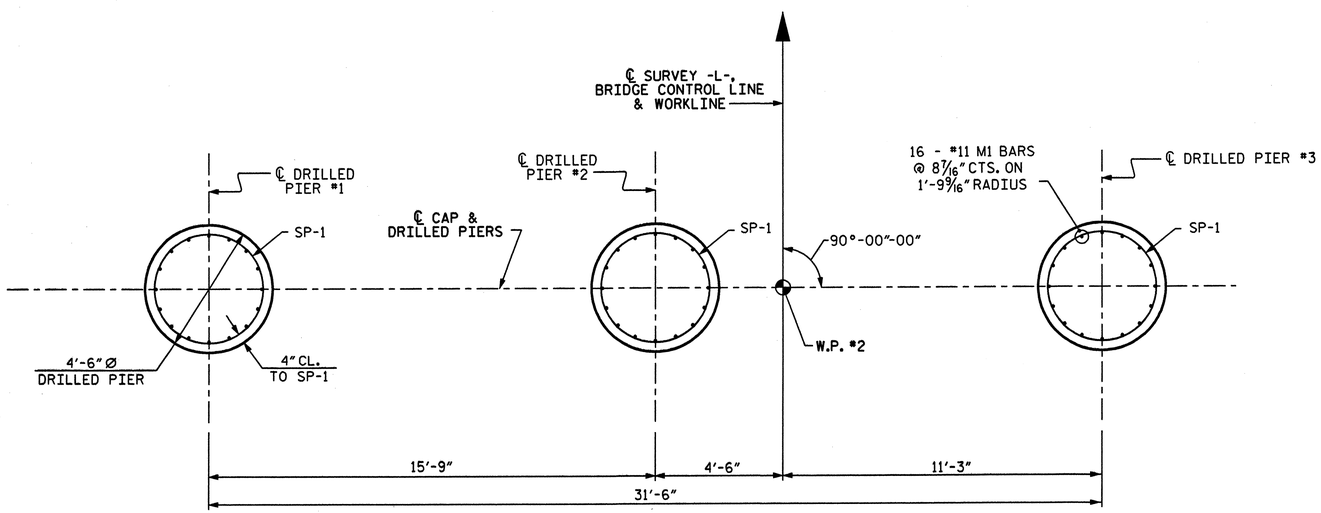

PLAN OF DRILLED PIERS

NOTE: REINFORCING STEEL AND DIMENSIONS ARE TYPICAL FOR ALL DRILLED PIERS.

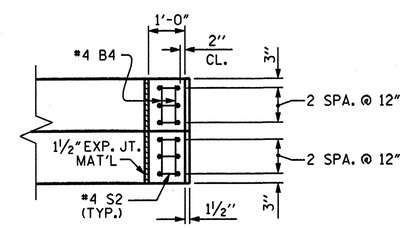

PLAN

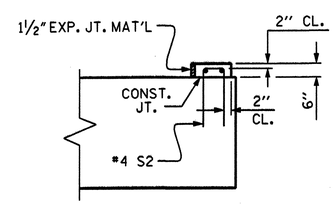

ELEVATION

LATERAL GUIDE DETAILS

WBS NO. 37661

FRANKLIN COUNTY

STATION: 16+35.39 -L-

REPLACES BRIDGE NO. 41 SHEET 2 OF 2

STATE OF NORTH CAROLINA
DEPARTMENT OF TRANSPORTATION
RALEIGH

SUBSTRUCTURE

BENT #1

36' CLEAR ROADWAY - 90° SKEW

NORTH CAROLINA PROFESSIONAL SEAL 19831 ENGINEER DAVID L. SAWYER, JR.
5-30-06

PLANS PREPARED BY:
SIMPSON ENGINEERS & ASSOCIATES
5520 Dillard Drive
Suite 120
Cary, NC 27518
(919) 852-0468
(919) 852-0598 (Fax)
www.simpsonengr.com

REVISIONS								SHEET NO.
NO.	BY:	DATE:	NO.	BY:	DATE:			53
1			3					TOTAL SHEETS
2			4					62

DRAWN BY : D. VESTER DATE : 5/06
CHECKED BY : M. AVERETTE DATE : 5/06

5/30/2006 3:31:50 PM g:\bmu\franklin41\drawings\nma5017b_sd_bib_01.dgn

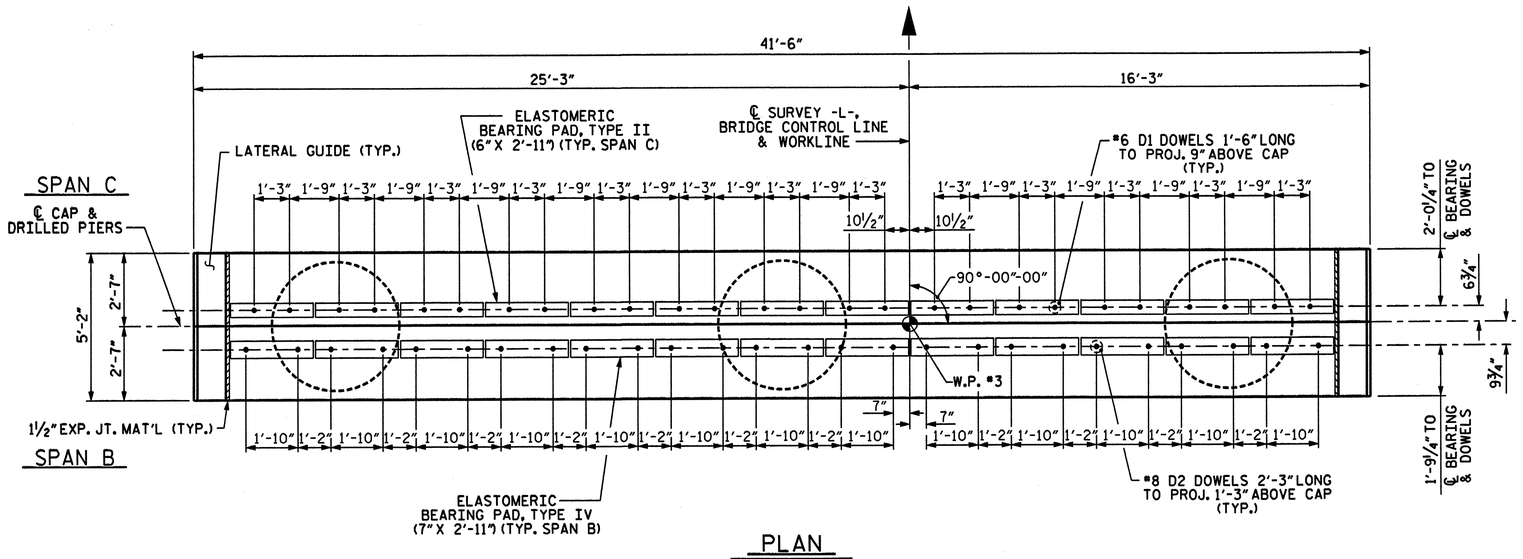

PLAN

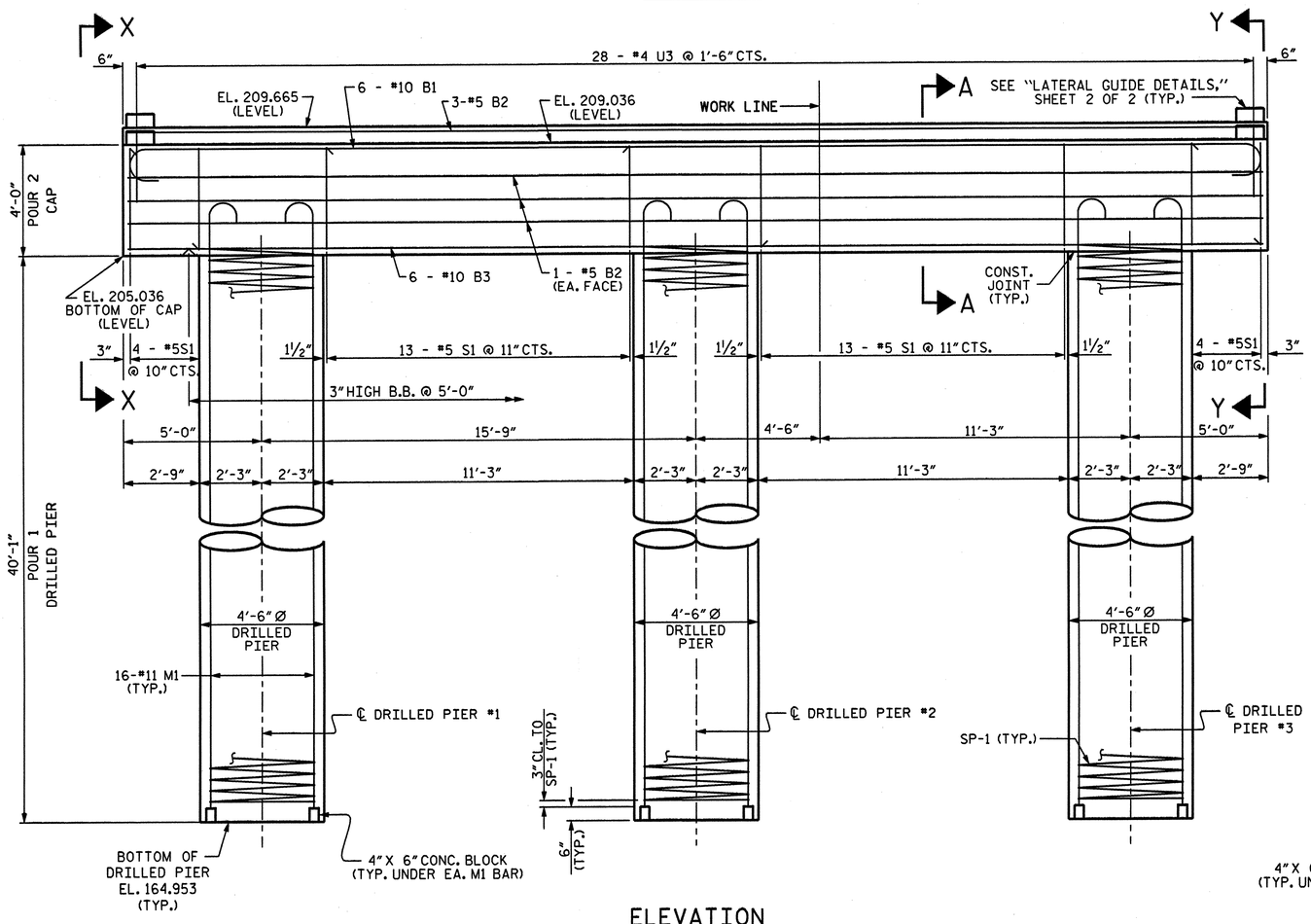

ELEVATION

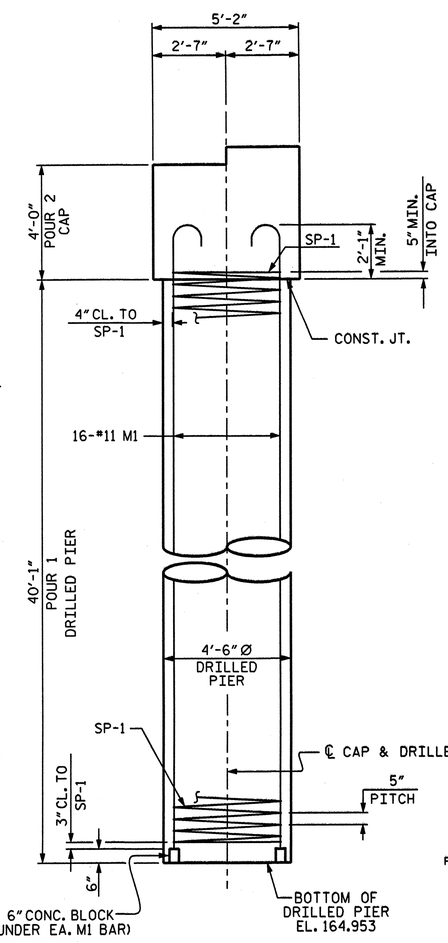

END ELEVATION

NOTES:

STIRRUPS IN THE CAP MAY BE SHIFTED AS NECESSARY TO CLEAR #6 D1 OR #8 D2 DOWELS.

HOOKS ON "M" BARS MAY BE TURNED AS NECESSARY FOR PLACING REINFORCING STEEL.

ALL STEEL IN THE DRILLED PIERS IS INCLUDED IN THE PAY ITEM FOR "REINFORCING STEEL" AND "SPIRAL COLUMN REINFORCING STEEL".

FOR DRILLED PIERS, SEE SPECIAL PROVISIONS.

FOR PERMANENT STEEL CASING, SEE SPECIAL PROVISIONS FOR DRILLED PIERS.

INVERT ALTERNATE STIRRUPS.

NO SEPARATE PAYMENT SHALL BE MADE FOR ANY ADDITIONAL STEEL REQUIRED IN CONSTRUCTION OF THE DRILLED PIER AS THIS IS CONSIDERED INCIDENTAL TO THE LINEAR FOOT PRICE FOR DRILLED PIER.

THE CONTRACTORS ATTENTION IS CALLED TO THE FACT THAT THE LONGITUDINAL REINFORCEMENT FOR THE DRILLED PIER IS DETAILED WITH THREE FEET OF EXTRA LENGTH.

NORTH CAROLINA PROFESSIONAL SEAL 19831 ENGINEER DAVID B. SIMPSON, JR.
5-30-06

WBS NO. 37661

FRANKLIN COUNTY

STATION: 16+35.39 -L-

REPLACES BRIDGE NO. 41 — SHEET 1 OF 2

STATE OF NORTH CAROLINA
DEPARTMENT OF TRANSPORTATION
RALEIGH

SUBSTRUCTURE

BENT #2

36' CLEAR ROADWAY - 90° SKEW

REVISIONS						SHEET NO.
NO.	BY:	DATE:	NO.	BY:	DATE:	54
1			3			TOTAL SHEETS
2			4			62

PLANS PREPARED BY:

SIMPSON ENGINEERS & ASSOCIATES
5520 Dillard Drive
Suite 120
Cary, NC 27518
(919) 852-0468
(919) 852-0598 (Fax)
www.simpsonengr.com

DRAWN BY : D. VESTER DATE : 5/06
CHECKED BY : M. AVERETTE DATE : 5/06

5/30/2006 3:31:49 PM g:\bmu\franklin41\drawings\rcmc5017b.sd.b2a.01.dgn

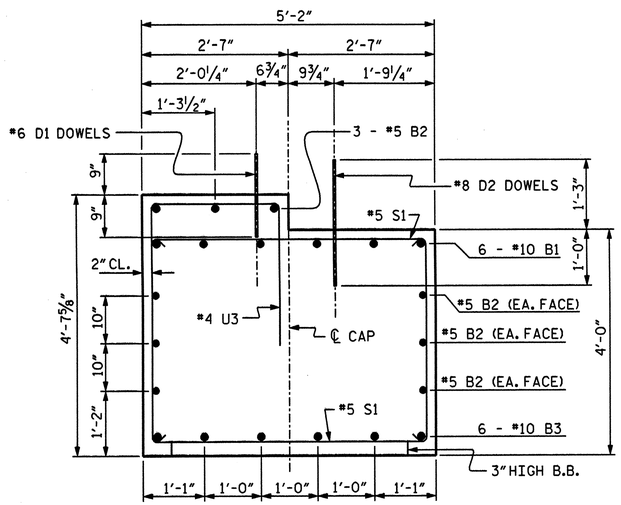

SECTION A-A

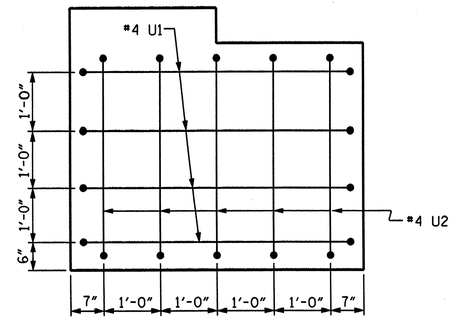

SECTION X-X

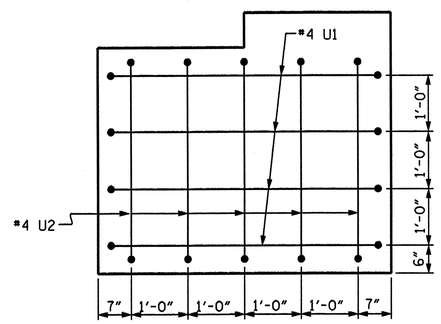

SECTION Y-Y

BAR TYPES

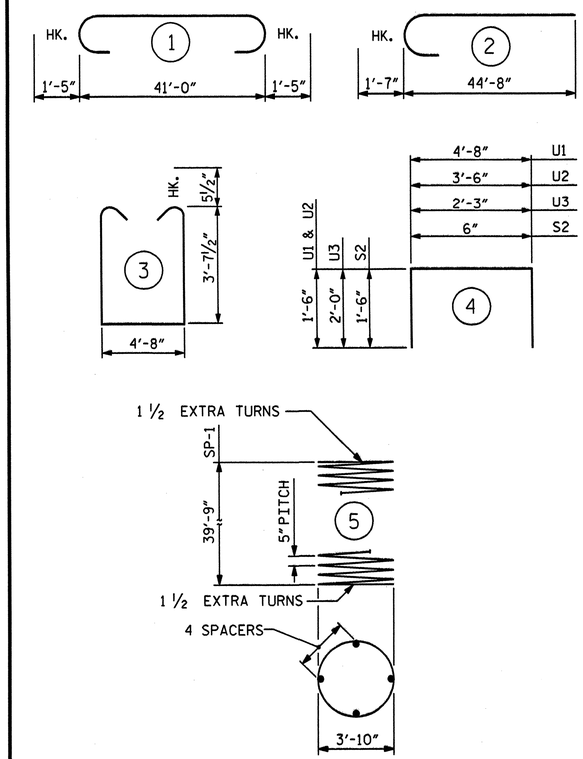

ALL BAR DIMENSIONS ARE OUT TO OUT

BILL OF MATERIAL

BENT #2

BAR	NO.	SIZE	TYPE	LENGTH	WEIGHT
B1	6	10	1	43'-10"	1132
B2	9	5	STR	41'-0"	385
B3	6	10	STR	41'-0"	1059
B4	8	4	STR	2'-3"	12
D1	26	6	STR	1'-6"	59
D2	26	8	STR	2'-3"	156
M1	48	11	2	46'-3"	11795
S1	34	5	3	12'-10"	455
S2	12	4	4	3'-6"	28
U1	8	4	4	7'-8"	41
U2	10	4	4	6'-6"	43
U3	28	4	4	6'-3"	117
SP-1	3	✱✱	5	1169'-8"	3660

REINFORCING STEEL 15282 LBS.

SPIRAL REINFORCING STEEL 3660 LBS.

CLASS "A" CONCRETE BREAKDOWN
POUR #2 (CAP & LAT. GUIDES) 34.5 CU. YDS.

DRILLED PIER QUANTITIES

DRILLED PIER CONCRETE
POUR #1 (DRILLED PIER) 70.8 CU. YDS.

4'-6"Ø DRILLED PIERS IN SOIL 109.3 LIN. FT.

4'-6"Ø DRILLED PIERS
NOT IN SOIL 11.0 LIN. FT.

4'-6"Ø PERMANENT STEEL CASING 95.6 LIN. FT.

✱✱ THE SP-1 SPIRAL REINFORCING STEEL SHALL BE W31 OR D-31 COLD DRAWN WIRE OR #5 PLAIN OR DEFORMED BAR.

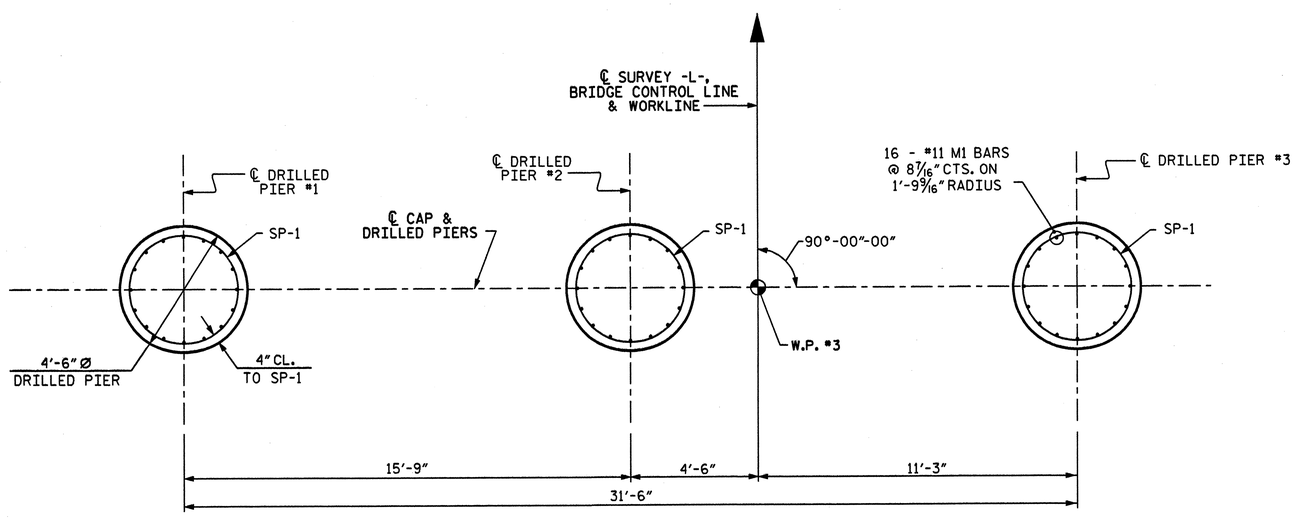

PLAN OF DRILLED PIERS

NOTE: REINFORCING STEEL AND DIMENSIONS ARE TYPICAL FOR ALL DRILLED PIERS.

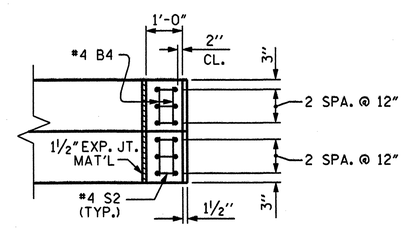

PLAN

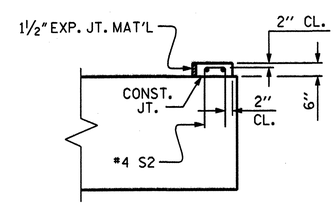

ELEVATION

LATERAL GUIDE DETAILS

NORTH CAROLINA PROFESSIONAL SEAL 19831 ENGINEER DAVID SIMPSON, JR.
5-30-06

PLANS PREPARED BY:
SIMPSON ENGINEERS & ASSOCIATES
5520 Dillard Drive
Suite 120
Cary, NC 27518
(919) 852-0468
(919) 852-0598 (Fax)
www.simpsonengr.com

WBS NO. 37661
FRANKLIN COUNTY
STATION: 16+35.39 -L-

REPLACES BRIDGE NO. 41 SHEET 2 OF 2

STATE OF NORTH CAROLINA
DEPARTMENT OF TRANSPORTATION
RALEIGH
SUBSTRUCTURE

BENT #2

36' CLEAR ROADWAY - 90° SKEW

REVISIONS								SHEET NO.
NO.	BY:	DATE:	NO.	BY:	DATE:			55
1			3					TOTAL SHEETS
2			4					62

DRAWN BY : D. VESTER DATE : 5/06
CHECKED BY : M. AVERETTE DATE : 5/06

5/30/2006 3:31:49 PM g:\bmu\franklin41\drawings\nma5017b_sd_b2b_01.dgn

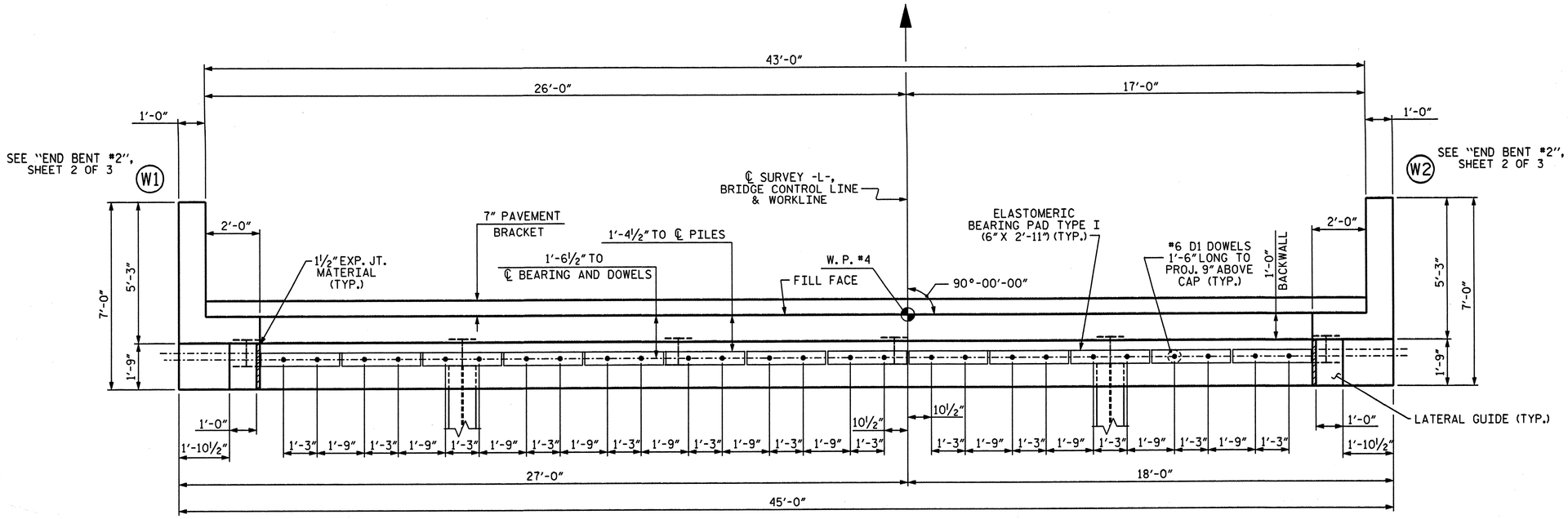

PLAN

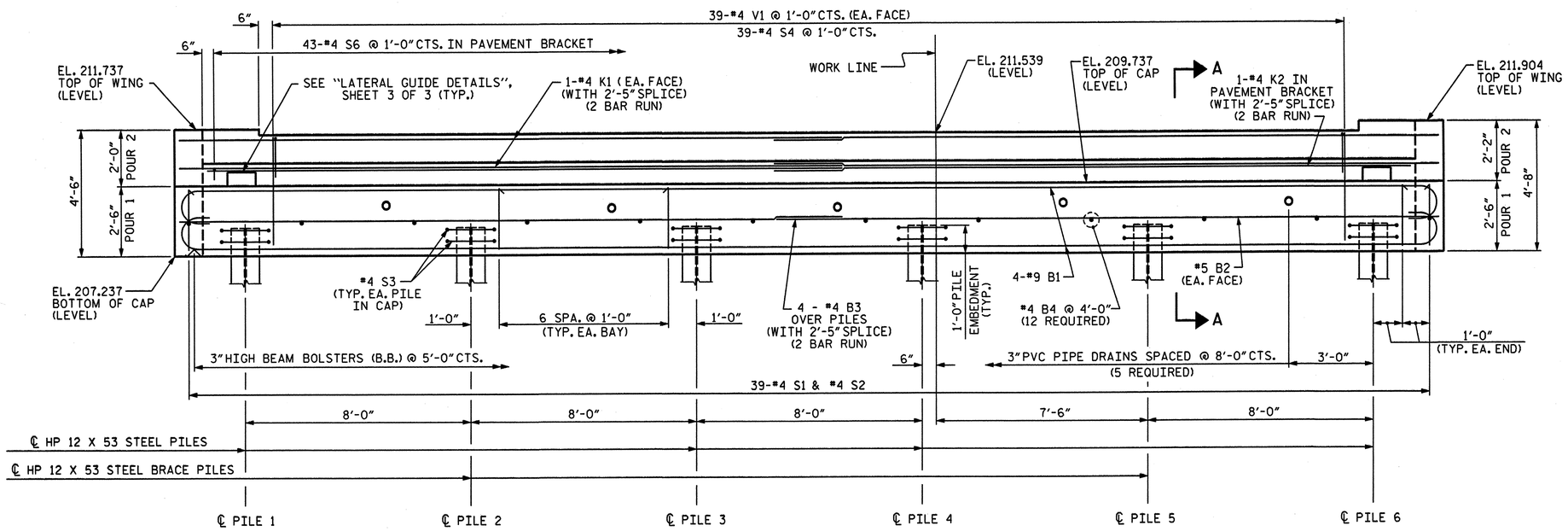

ELEVATION

NOTES

STIRRUPS IN CAP MAY BE SHIFTED AS NECESSARY TO CLEAR #6 D1 DOWELS.

PIPE DRAINS MAY BE SHIFTED SLIGHTLY AS NECESSARY TO CLEAR REINFORCING STEEL AND DOWELS.

WBS NO. 37661

FRANKLIN COUNTY

STATION: 16+35.39 -L-

REPLACES BRIDGE NO. 41 SHEET 1 OF 3

STATE OF NORTH CAROLINA
DEPARTMENT OF TRANSPORTATION
RALEIGH

SUBSTRUCTURE

END BENT #2

36' CLEAR ROADWAY - 90° SKEW

NORTH CAROLINA PROFESSIONAL SEAL 19831 ENGINEER DAVID B. SIMPSON, JR.
5-30-06

PLANS PREPARED BY:

SIMPSON ENGINEERS & ASSOCIATES
5520 Dillard Drive
Suite 120
Cary, NC 27518
(919) 852-0468
(919) 852-0598 (Fax)
www.simpsonengr.com

REVISIONS								SHEET NO.
NO.	BY:	DATE:	NO.	BY:	DATE:			56
1			3					TOTAL SHEETS
2			4					62

DRAWN BY : D. VESTER DATE : 5/06
CHECKED BY : M. AVERETTE DATE : 5/06

5/30/2006 3:31:48 PM g:\bmu\franklin41\drawings\vncma5017b_sd_eb2a_01.dgn

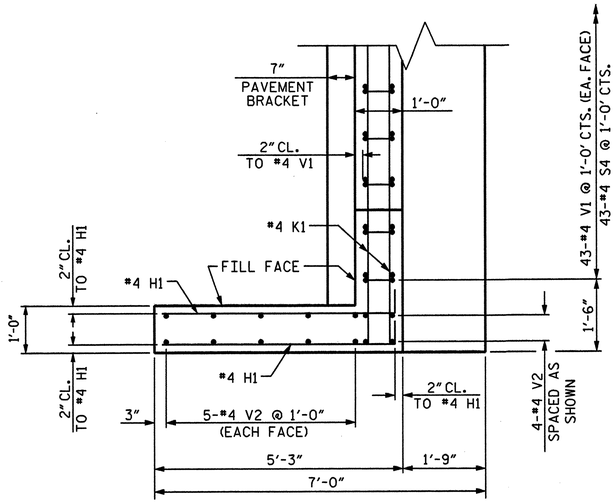

W1 PLAN OF LEFT WING

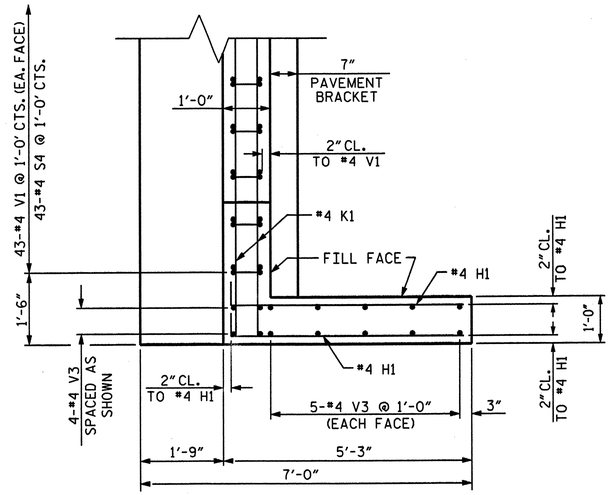

W2 PLAN OF RIGHT WING

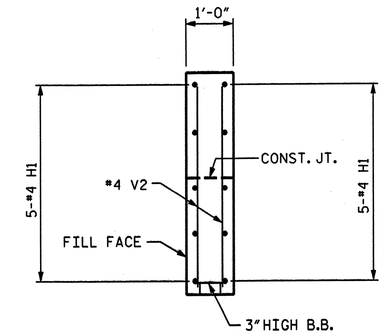

SECTION Y-Y

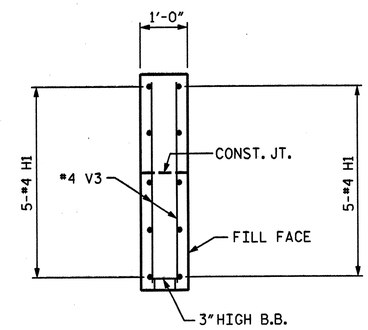

SECTION X-X

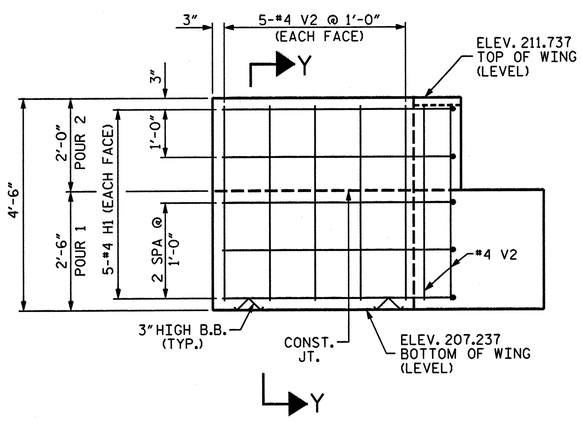

W1 ELEVATION OF LEFT WING

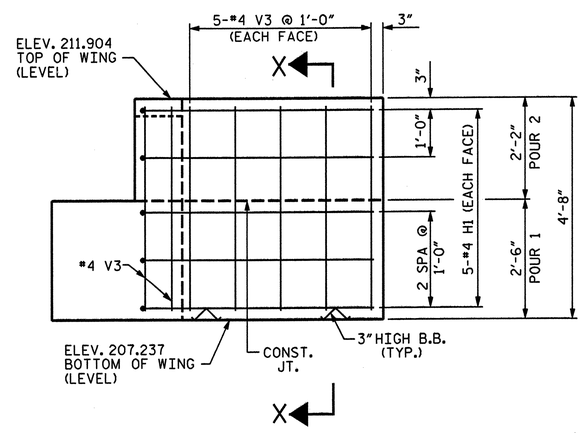

W2 ELEVATION OF RIGHT WING

WBS NO. 37661

FRANKLIN COUNTY

STATION: 16+35.39 -L-

REPLACES BRIDGE NO. 41 SHEET 2 OF 3

NORTH CAROLINA PROFESSIONAL SEAL 19831 ENGINEER DAVID B. SIMPSON, JR.
5-30-06

PLANS PREPARED BY:

SIMPSON ENGINEERS & ASSOCIATES
5520 Dillard Drive
Suite 120
Cary, NC 27518
(919) 852-0468
(919) 852-0598 (Fax)
www.simpsonengr.com

STATE OF NORTH CAROLINA
DEPARTMENT OF TRANSPORTATION
RALEIGH

SUBSTRUCTURE

END BENT #2

36' CLEAR ROADWAY - 90° SKEW

REVISIONS								SHEET NO.
NO.	BY:	DATE:	NO.	BY:	DATE:			57
1			3					TOTAL SHEETS
2			4					62

DRAWN BY : D. VESTER DATE : 5/06
CHECKED BY : M. AVERETTE DATE : 5/06

5/30/2006 3:31:48 PM g:\bmu\franklin41\drawings\ncma5017b_sd_eb2b_01.dgn

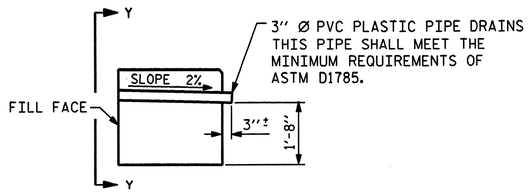

SECTION THRU CAP

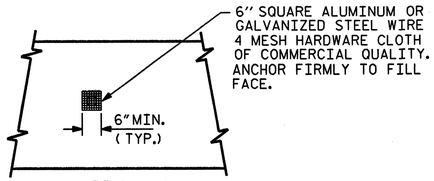

VIEW Y-Y

NOTE: NO SEPARATE PAYMENT WILL BE MADE FOR FURNISHING AND INSTALLING THE PVC PLASTIC PIPE DRAINS, HARDWARE CLOTH AND FASTENERS. THE ENTIRE COST OF THIS WORK SHALL BE INCLUDED IN THE LUMP SUM BID PRICE FOR PLAECMENT OF SUBSTRUCTURE.

PIPE DRAIN DETAILS

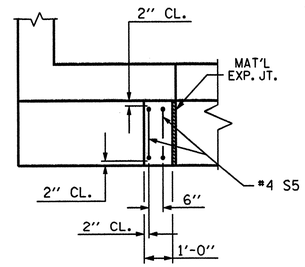

PLAN

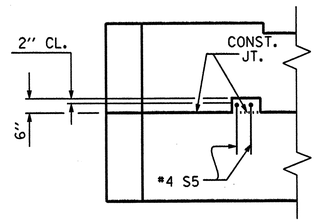

ELEVATION

LATERAL GUIDE DETAILS

BAR TYPES

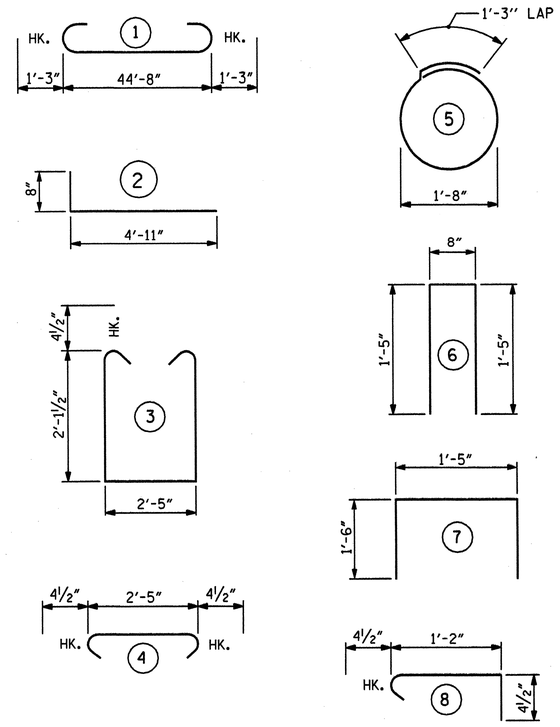

ALL BAR DIMENSIONS ARE OUT TO OUT

BILL OF MATERIAL
END BENT #2

BAR	NO.	SIZE	TYPE	LENGTH	WEIGHT
B1	8	9	1	47'-2"	1283
B2	2	5	STR	44'-8"	93
B3	8	4	STR	23'-7"	126
B4	12	4	STR	2'-5"	19
D1	26	6	STR	1'-6"	59
H1	20	4	2	5'-7"	75
K1	8	4	STR	23'-7"	126
K2	2	4	STR	22'-7"	30
S1	39	4	3	7'-5"	193
S2	39	4	4	3'-2"	82
S3	12	4	5	6'-6"	52
S4	43	4	6	3'-6"	101
S5	4	4	7	4'-5"	12
S6	43	4	8	1'-11"	55
V1	86	4	STR	3'-10"	220
V2	14	4	STR	4'-1"	38
V3	14	4	STR	4'-3"	40

TOTAL REINFORCING STEEL 2604 LBS.

CLASS "A" CONCRETE BREAKDOWN	
POUR #1	12.2 CU. YDS.
POUR #2	3.8 CU. YDS.
TOTAL	16.0 CU. YDS.

HP 12 X 53 STEEL PILES
6 PILES REQUIRED - LIN. FEET 240.0

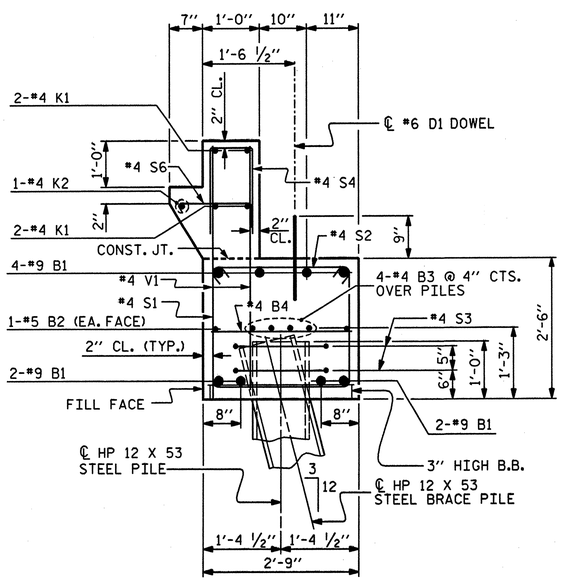

SECTION A-A

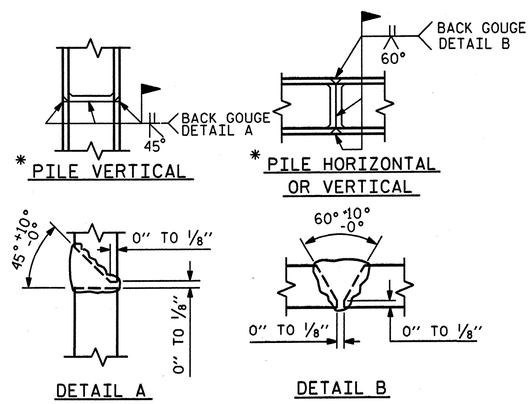

PILE SPLICE DETAILS

* POSITION OF PILE DURING WELDING.

WBS NO. 37661
FRANKLIN COUNTY
STATION: 16+35.39 -L-

REPLACES BRIDGE NO. 41 SHEET 3 OF 3

STATE OF NORTH CAROLINA
DEPARTMENT OF TRANSPORTATION
RALEIGH

SUBSTRUCTURE

END BENT #2

36' CLEAR ROADWAY - 90° SKEW

NORTH CAROLINA PROFESSIONAL SEAL 19831 ENGINEER DAVID B. SIMPSON, III
5-30-06

PLANS PREPARED BY:
SIMPSON ENGINEERS & ASSOCIATES
5520 Dillard Drive
Suite 120
Cary, NC 27518
(919) 852-0468
(919) 852-0598 (Fax)
www.simpsonengr.com

REVISIONS						SHEET NO.
NO.	BY:	DATE:	NO.	BY:	DATE:	58
1			3			TOTAL SHEETS
2			4			62

DRAWN BY : D. VESTER DATE : 5/06
CHECKED BY : M. AVERETTE DATE : 5/06

5/30/2006 3:31:15 PM g:\bmu\franklin41\drawings\ncmd5017b_sd_eb2c_01.dgn

ROADSIDE ENVIRONMENTAL UNIT
DEPARTMENT OF TRANSPORTATION
DIVISION OF HIGHWAYS
RALEIGH, N.C.

2002 STANDARD SPECIFICATIONS

NOTE: ANY DEVIATION FROM OPTIONS GIVEN WILL REQUIRE PRIOR APPROVAL BY ENGINEER.

NOTE:
TEMPORARY SILT FENCE SHALL BE INSTALLED A MINIMUM OF 3 FEET FROM TOE OF FILL IN WETLAND AREAS

EROSION CONTROL PLAN

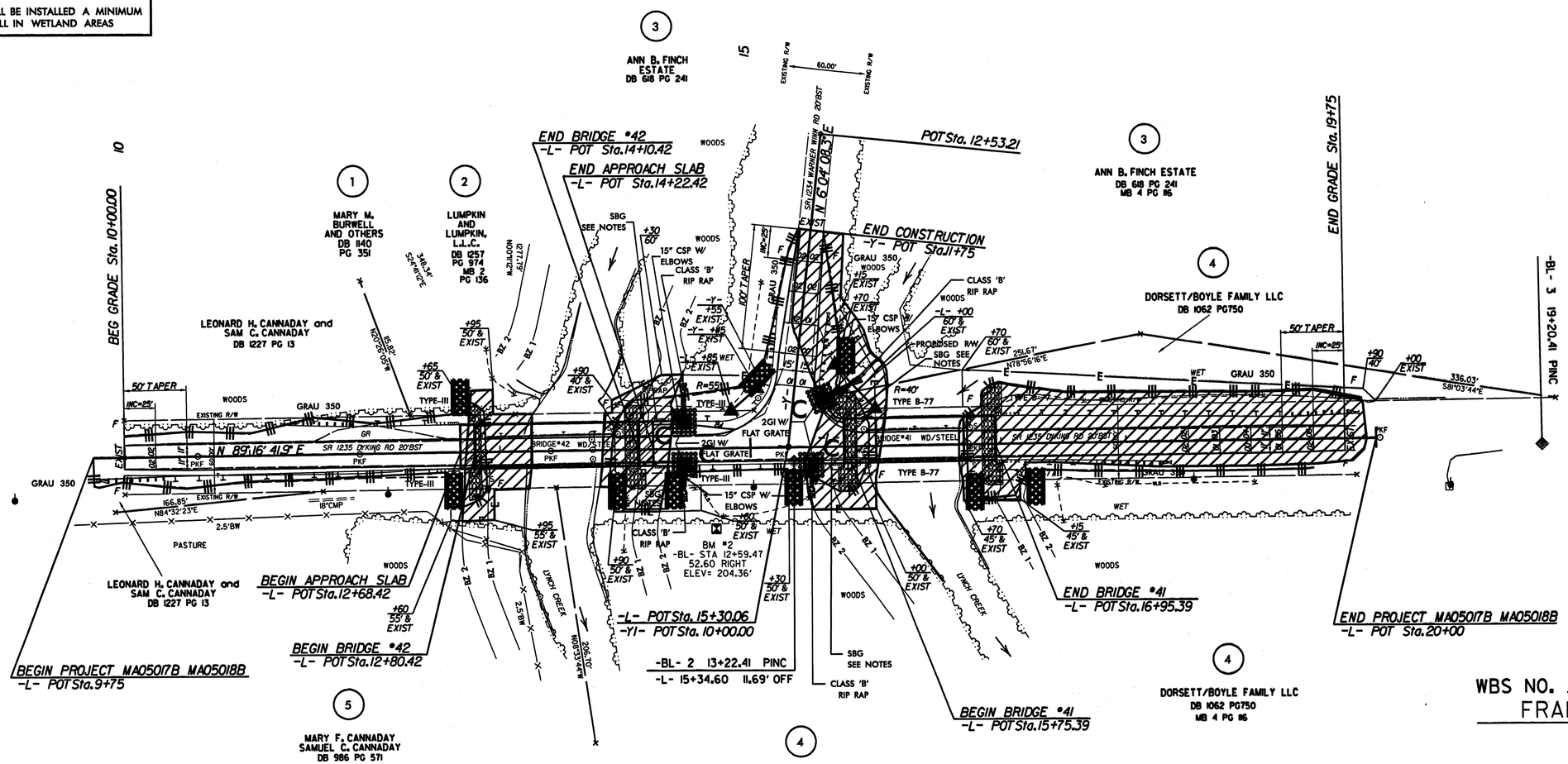

WBS NO. 37661
FRANKLIN COUNTY
STATION: BRIDGE 42 13+45.42 -L- & BRIDGE 41 16+35.39 -L-

REPLACES BRIDGE NO. 42 & 41 SHEET 1 OF 3

ENVIRONMENTALLY SENSITIVE AREA
PLEASE SEE NOTE

Std. #	Description	Symbol
1605.01	Temporary Silt Fence	
1632.03	Rock Inlet Sediment Trap Type C	C
1633.01	Temporary Rock Silt Check Type-A	

NOTES:
1) TAPER GUARDRAIL AT A MAXIMUM RATE OF 50:1 LEFT OF STA.16+95 TO 19+85
2) SBG = SHOULDER BERM GUTTER
3) SBG -L- STA.14+22.42 TO 14+46.77 LT.
-L- STA.14+22.45 TO 14+46.91 RT.
-Y- STA.10+41.18 TO -L- STA.15+75.38 LT.
-L- STA.15+48.99 TO 15+75.40 RT.

STATE OF NORTH CAROLINA
DEPARTMENT OF TRANSPORTATION
RALEIGH

EROSION CONTROL

36' CLEAR ROADWAY - 90° SKEW

REVISIONS						SHEET NO.
NO.	BY:	DATE:	NO.	BY:	DATE:	59
1			3			TOTAL SHEETS
2			4			62

5/30/2006 3:37:27 PM gi:\bmu\franklin42\drawings\ncma5018b_sd_ec1_01.dgn

ROADSIDE ENVIRONMENTAL UNIT
DEPARTMENT OF TRANSPORTATION
DIVISION OF HIGHWAYS
RALEIGH, N.C.

2002 STANDARD SPECIFICATIONS

EROSION CONTROL PLAN

STATE OF NORTH CAROLINA
DEPT. OF TRANSPORTATION
DIVISION OF HIGHWAYS
RALEIGH, N.C.

ENGLISH STANDARD DRAWING FOR
ROCK INLET SEDIMENT TRAP TYPE 'C'

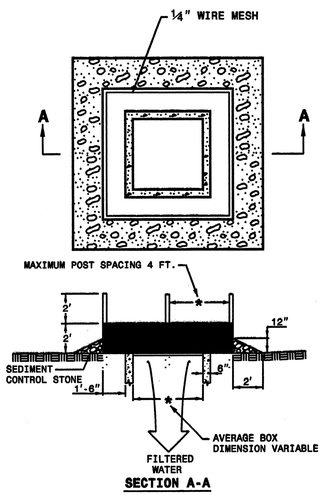

MULTI-DIRECTIONAL FLOW

NOTE
SEDIMENT CONTROL STONE SHALL BE NO. 5 OR NO. 57 AND SHALL BE PAID FOR AT THE CONTRACT BID PRICE FOR "LUMP SUM FOR EROSION CONTROL."
WIRE MESH SHALL BE HARDWARE CLOTH 23 GAUGE MIN. AND SHALL HAVE 1/4 INCH MESH OPENINGS.
TOP OF WIRE MESH SHALL BE A MINIMUM OF ONE FOOT BELOW THE SHOULDER OR ANY DIVERSION POINT.
STEEL POST SHALL BE 5 FT. IN HEIGHT, BE INSTALLED 1.5 FT. DEEP MINIMUM, AND BE OF THE SELF-FASTENER ANGLE STEEL TYPE.
WOOD POST SHALL BE 6 FT. IN HEIGHT, BE INSTALLED TO 1.5 FT. DEEP MINIMUM, AND BE 3 INCHES IN DIAMETER.
POST SPACING SHALL BE A MAXIMUM OF 4 FT.

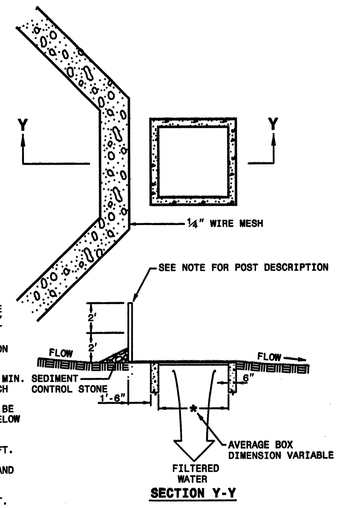

SINGLE-DIRECTIONAL FLOW

STATE OF NORTH CAROLINA
DEPT. OF TRANSPORTATION
DIVISION OF HIGHWAYS
RALEIGH, N.C.

ENGLISH STANDARD DRAWING FOR
ROCK INLET SEDIMENT TRAP TYPE 'C'

SHEET 1 OF 1
1632.03

STATE OF NORTH CAROLINA
DEPT. OF TRANSPORTATION
DIVISION OF HIGHWAYS
RALEIGH, N.C.

ENGLISH STANDARD DRAWING FOR
TEMPORARY ROCK SILT CHECK TYPE 'A'

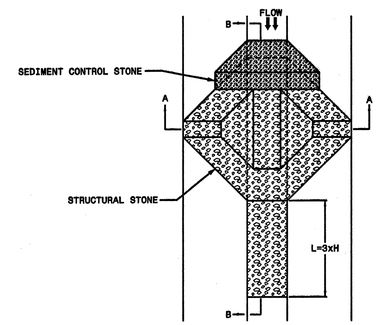

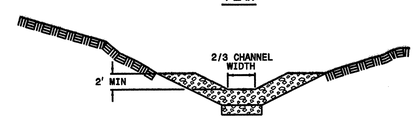

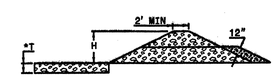

NOTE
STRUCTURAL STONE SHALL BE STONE FOR EROSION CONTROL (CLASS "B") AND SHALL BE PAID FOR AT THE CONTRACT BID PRICE FOR "LUMP SUM FOR EROSION CONTROL."
SEDIMENT CONTROL STONE SHALL BE NO. 5 OR NO. 57 STONE AND SHALL BE PAID FOR AT THE CONTRACT BID PRICE FOR "LUMP SUM FOR EROSION CONTROL."

STATE OF NORTH CAROLINA
DEPT. OF TRANSPORTATION
DIVISION OF HIGHWAYS
RALEIGH, N.C.

ENGLISH STANDARD DRAWING FOR
TEMPORARY ROCK SILT CHECK TYPE 'A'

SHEET 1 OF 1
1633.01

STATE OF NORTH CAROLINA
DEPT. OF TRANSPORTATION
DIVISION OF HIGHWAYS
RALEIGH, N.C.

ENGLISH STANDARD DRAWING FOR
TEMPORARY SILT FENCE

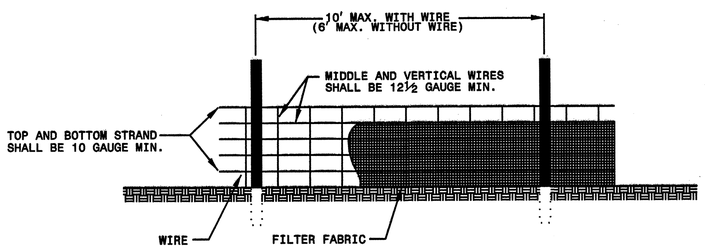

NOTES
WIRE SHALL BE A MINIMUM OF 32" IN WIDTH AND SHALL HAVE A MINIMUM OF 6 LINE WIRES WITH 12" STAY SPACING.
FILTER FABRIC SHALL BE A MINIMUM OF 36" IN WIDTH AND SHALL BE FASTENED ADEQUATELY TO THE WIRE AS DIRECTED BY THE ENGINEER.
STEEL POST SHALL BE 5'-0" IN HEIGHT AND BE OF THE SELF-FASTENER ANGLE STEEL TYPE.
WOOD POST SHALL BE 6'-0" IN HEIGHT AND 3" IN DIAMETER.

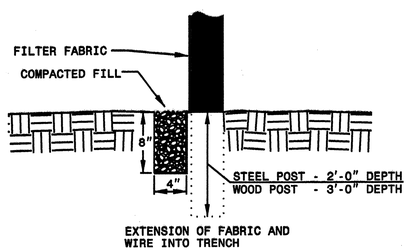

STATE OF NORTH CAROLINA
DEPT. OF TRANSPORTATION
DIVISION OF HIGHWAYS
RALEIGH, N.C.

ENGLISH STANDARD DRAWING FOR
TEMPORARY SILT FENCE

SHEET 1 OF 1
1605.01

WBS NO. 37661
FRANKLIN COUNTY
STATION: BRIDGE 42
13+45.42 -L- &
BRIDGE 41
16+35.39 -L-

REPLACES BRIDGE NO. 42 & 41 SHEET 2 OF 3

STATE OF NORTH CAROLINA
DEPARTMENT OF TRANSPORTATION
RALEIGH

EROSION CONTROL

36' CLEAR ROADWAY - 90° SKEW

REVISIONS						SHEET NO.
NO.	BY:	DATE:	NO.	BY:	DATE:	60
1			3			TOTAL SHEETS
2			4			62

5/30/2006 3:37:27 PM g:\bmu\franklin42\drawings\ncmo5018b_sd_ec2_01.dgn

ROADSIDE ENVIRONMENTAL UNIT
DEPARTMENT OF TRANSPORTATION
DIVISION OF HIGHWAYS
RALEIGH, N.C.

2002 STANDARD SPECIFICATIONS

EROSION CONTROL PLAN

SPECIAL STILLING BASIN WITH ROCK PAD

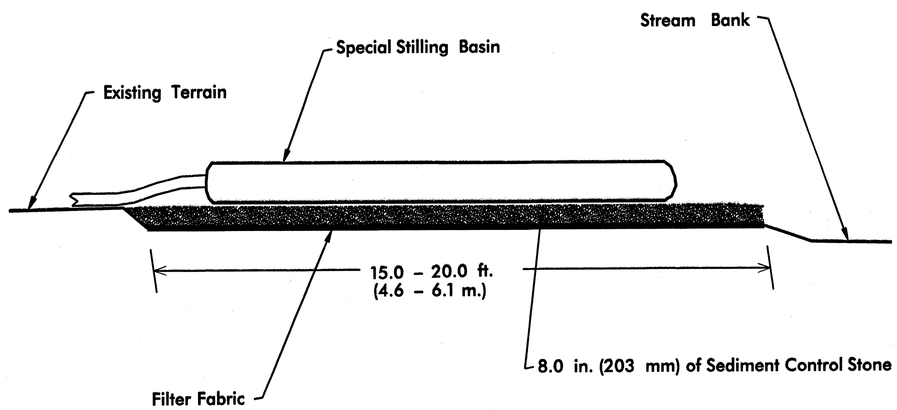

Not To Scale

Note: Provide Stabilized Outlet to Streambank

Special Stilling Basin(s):

The work covered by this section consists of furnishing, placing, and removing a special stilling basin(s) as directed by the Engineer. The special stilling basin(s) shall be used to filter pumped water during the drilled pier operation, footing excavation, or culvert construction.

The filter fabric shall meet the requirements of Section 1056 for Type 2 Fabric.

Sediment control stone shall meet the requirements of Section 1005. Install stone according to the detail shown on the plans.

The special stilling basin(s) shall be a water permeable fabric bag that traps sand, silt, and fines as sediment laden water is pumped into it. This device shall be constructed such that it is portable and can be used adjacent to the drilled pier operation, footing excavation,
or culvert construction.

The special stilling basin(s) shall be a bag constructed to a minimum size of 10' x 15' made from a nonwoven fabric. It shall have a sewn-in 8 in. (maximum) spout for receiving pump discharge. The bag seams shall be sewn with a double needle machine using a high strength thread. The seams shall have a minimum wide width strength as follows:

Test Method	Minimum Specifications
ASTM D-4884	60 lb/in

The fabric used to construct the bag shall be stabilized to provide resistance to ultra-violet degradation and meet the following specifications for flow rates, strength, and permeability:

Property	Test Method	Units	Minimum Specifications
Weight	ASTM D-3776	oz/yd	8.0
Grab tensile	ASTM D-4632	lb	200.0
Puncture	ASTM D-4833	lb	130.0
Flow rate	ASTM D-4491	gal/min/sf	80.0
Permittivity	ASTM D-4991	1/sec	1.5
UV Resistance	ASTM D-4355	%	70.0

The Contractor shall install the special stilling basin in accordance with the details in the plans and at locations as directed by the Engineer.

The special stilling basin(s) shall be placed so the incoming water flows into and through the bag without causing erosion. The neck or spout of the bag shall be tied off tightly to stop the water from flowing out of the bag without going through the walls.

The special stilling basin(s) shall be replaced and disposed of when it is 3/4 full of sediment or when it is impractical for the bag to filter the sediment out at a reasonable flow rate. Prior approval from the Engineer must be received before removal and replacement.

The Contractor shall be responsible for providing a sufficient quantity of bags to contain silt from pumped effluent during the drilled pier operation, footing excavation, or culvert construction.

The quantity of sediment control stone, filter fabric for drainage, and special stilling basin(s) as measured above will be paid for at contract price for "Lump Sum for Erosion Control". Such price and payment will be full compensation for all work covered by this provision, including but not limted to, furnishing all materials, placing and maintaining the special stilling basin(s), and removal and disposal of silt accumulations and bag.

WBS NO. 37661
FRANKLIN COUNTY
STATION: BRIDGE 42 13+45.42 -L- & BRIDGE 41 16+35.39 -L-

REPLACES BRIDGE NO. 42 & 41 SHEET 3 OF 3

STATE OF NORTH CAROLINA
DEPARTMENT OF TRANSPORTATION
RALEIGH

EROSION CONTROL

36' CLEAR ROADWAY - 90° SKEW

REVISIONS						SHEET NO.
NO.	BY:	DATE:	NO.	BY:	DATE:	61
1			3			TOTAL SHEETS
2			4			62

5/30/2006 3:37:27 PM gt\bmu\franklin42\drawings\ncma5018b_sd_ec3_01.dgn

PLANTING DETAILS

SEEDLING / LINER BAREROOT PLANTING DETAIL

HEALING IN

1. Locate a healing-in site in a shady, well protected area.
2. Excavate a flat bottom trench 12 inches deep and provide drainage.

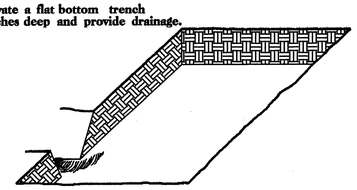

3. Backfill the trench with 2 inches well rotted sawdust. Place a 2 inch layer of well rotted sawdust at a sloping angle at one end of the trench.

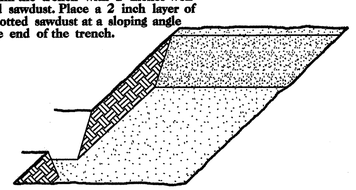

4. Place a single layer of plants against the sloping end so that the root collar is at ground level.

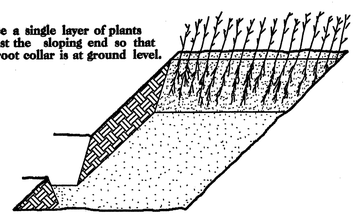

5. Place a 2 inch layer of well rotted sawdust over the roots maintaining a sloping angle.

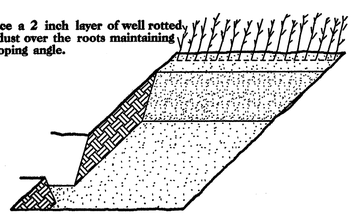

6. Repeat layers of plants and sawdust as necessary and water thoroughly.

DIBBLE PLANTING METHOD
USING THE KBC PLANTING BAR

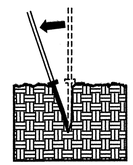

1. Insert planting bar as shown and pull handle toward planter.

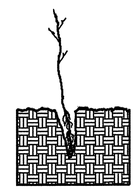

2. Remove planting bar and place seedling at correct depth.

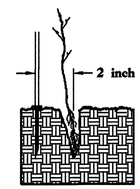

3. Insert planting bar 2 inches toward planter from seedling.

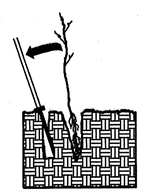

4. Pull handle of bar toward planter, firming soil at bottom.

5. Push handle forward firming soil at top.

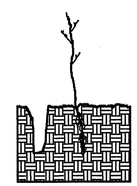

6. Leave compaction hole open. Water thoroughly.

PLANTING NOTES:

PLANTING BAG
During planting, seedlings shall be kept in a moist canvas bag or similar container to prevent the root systems from drying.

KBC PLANTING BAR
Planting bar shall have a blade with a triangular cross section, and shall be 12 inches long, 4 inches wide and 1 inch thick at center.

ROOT PRUNING
All seedlings shall be root pruned, if necessary, so that no roots extend more than 10 inches below the root collar.

REFORESTATION DETAIL SHEET

N.C.D.O.T. - ROADSIDE ENVIRONMENTAL UNIT

STATE	PROJECT REFERENCE NO.	SHEET NO.	TOTAL SHEETS
N.C.	Bridge No. 42 & 41	RF-1	

REFORESTATION

☐ TREE REFORESTATION SHALL BE PLANTED 6 FT. TO 10 FT. ON CENTER, RANDOM SPACING, AVERAGING 8 FT. ON CENTER, APPROXIMATELY 680 PLANTS PER ACRE.

REFORESTATION

MIXTURE, TYPE, SIZE, AND FURNISH SHALL CONFORM TO THE FOLLOWING:

25% PLATANUS OCCIDENTALIS	SYCAMORE	12 in - 18 in BR
25% LIRIODENDRON TULIPIFERA	TULIP POPLAR	12 in - 18 in BR
25% PRUNUS SEROTINA	BLACK CHERRY	12 in - 18 in BR
25% BETULA NIGRA	RIVER BIRCH	12 in - 18 in BR

WBS NO. 37661

FRANKLIN COUNTY

STATION: BRIDGE 42 13+45.42 -L- & BRIDGE 41 16+35.39 -L-

REPLACES BRIDGE NO. 42 & 41

STATE OF NORTH CAROLINA
DEPARTMENT OF TRANSPORTATION
RALEIGH

REFORESTATION DETAIL

36' CLEAR ROADWAY - 90° SKEW

REVISIONS						SHEET NO.
NO.	BY:	DATE:	NO.	BY:	DATE:	62
1			3			TOTAL SHEETS
2			4			62

5/30/2006 3:45:40 PM g:\BMU\Franklin42\Drawings\NAMA5018B_sd_engreforest.dgn