VOLUME 3 OF 3

ARCHITECTURAL, MECHANICAL, AND ELECTRICAL DRAWINGS

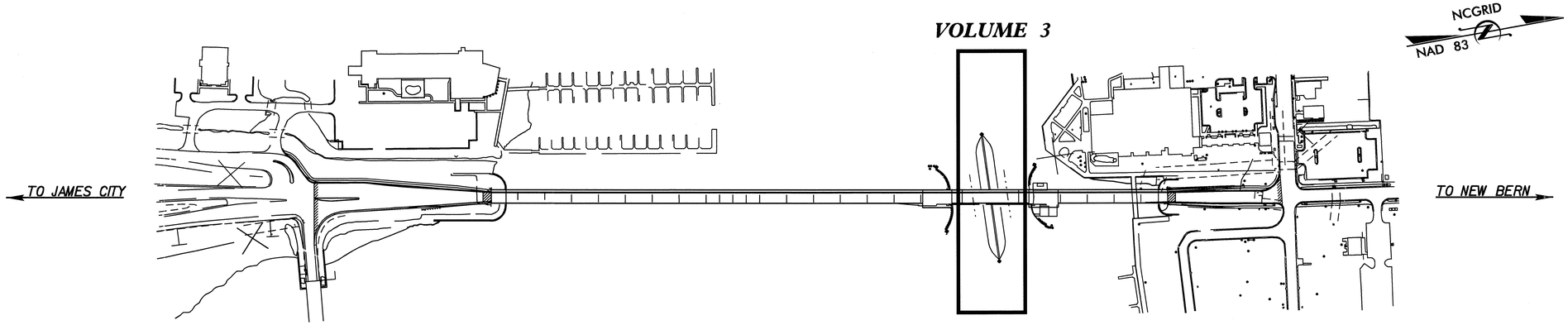

VOLUME 1	*Bridge Approach Spans & Retaining Walls*	*S–1 thru S–118 & W–1 thru W–3*
VOLUME 2	*Bascule Span Bridge Drawings*	*S–119 thru S–220*
VOLUME 3	*Architectural, Mechanical and Electrical Drawings*	*S–221 thru S–348*

INDEX OF SELECTED SHEETS	*SHEET(S)*
BRIDGE APPROACH SPANS TOTAL BILL OF MATERIAL	S-8
CONSTRUCTION STAGING (BASCULE SPAN)	S-119 & S-120
BASCULE SPAN INDEX OF DRAWINGS	S-121
BASCULE SPAN, ARCHITECTURAL, MECHANICAL, AND ELECTRIC TOTAL BILL OF MATERIAL	S-126
INDEX OF ARCHITECTURAL DRAWINGS	S-221
INDEX OF MECHANICAL DRAWINGS	S-244
INDEX OF ELECTRICAL DRAWINGS	S-262

PROJECT NO. B-2532

CRAVEN COUNTY

STATION:

STATE OF NORTH CAROLINA
DEPARTMENT OF TRANSPORTATION
RALEIGH

INDEX

REVISIONS						
NO.	BY:	DATE:	NO.	BY:	DATE:	
1			3			
2			4			

DRAWN BY : W.D. CRUTCHER DATE : 12-07-06
CHECKED BY : T.P GARRETT DATE : 12-07-06

07-DEC-2006 15:20
S:\PG3\Darrell\B-2532_sd_INDEX.dgn
dcrutcher

ABBREVIATIONS

AFF	ABOVE FINISHED FLOOR
ALUM	ALUMINUM
BD	BOARD
BOT	BOTTOM
BLDG	BUILDING
CLR	CLEAR
CLG	CEILING
CT	CERAMIC TILE
COL	COLUMN
CONC	CONCRETE
CONT	CONTINUOUS
CT	CERAMIC TILE
DN	DOWN
DWGS	DRAWINGS
EL	ELEVATION
ELEC	ELECTRICAL
EOS	EDGE OF SLAB
EPA	ENVIRONMENTAL PROTECTION ADMINISTRATION
EQ	EQUAL
ETC	ETCETERA
FIN	FINISHED
FLR	FLOOR
GA	GAUGE
GALV	GALVANIZED
GYP	GYPSUM
HM	HOLLOW METAL
HPU	HYDRAULIC POWER UNIT
HPUCP	HPU CONTROL PANEL
HR	HOUR
INSUL	INSULATION
LBS	POUNDS
MAX	MAXIMUM
MCC	MOTOR CONTROL CENTER
MDF	MINIMUM DRY FILM THICKNESS
MECH	MECHANICAL
MFCR'S	MANUFACTURER'S
MIL	THOUSANDTHS OF AN INCH
MIN	MINIMUM
MO	MASONRY OPENING
MSDS	MATERIALS SAFTEY DATA SHEETS
MWF	MINIMUM WET FILM THICKNESS
MTL	METAL
NO.	NUMBER
NCSBC	2002 NORTH CAROLINA STATE BUILDING CODE
OC	ON CENTER
OD	OUTSIDE DIAMETER
OPP HND	OPPOSITE HAND
OSHA	OCCUPATIONAL SAFETY AND HEALTH ADMINISTRATION
PL	PLATE
PLC	PROGRAMMABLE LOGIC CONTROL
PLUMB	PLUMBING
PSF	POUNDS PER SQUARE FOOT
PSI	POUNDS PER SQUARE INCH
PTD	PAINTED
R	RISERS (STAIR REFERENCE)
RC	REINFORCED CONCRETE
RE	REFER TO
REF	REFRIGERATOR
RO	ROUGH OPENING
SAFB	SOUND ATTENUATION FIRE BLANKET INSULATION
SECT	SECTION
SPEC	SPECIFICATIONS
SS	STAINLESS STEEL
STL	STEEL
STRUCT	STRUCTURAL
T	TREADS
TO	TOP OF
TGP	TECHNICAL GLASS PRODUCTS
TS	TUBE STEEL
TYP	TYPICAL
UL	UNDERWRITERS LABORATORIES
UON	UNLESS OTHERWISE NOTED
W/	WITH
WD	WOOD

SYMBOLS

AND
ANGLE
AT
CENTERLINE
PLATE
DIAMETER
CENTERLINE
HIDDEN LINE
ELEVATION
COLUMN REFERENCE GRIDS
PARTITION TYPE
WINDOW TYPE
REVISION NUMBER
DOOR NUMBER
SECTION
DRAWING NUMBER
ELEVATION NUMBER
DRAWING NUMBER
DETAIL NUMBER
DRAWING NUMBER
ROOM/SPACE NUMBER
ALUMINUM
STEEL OR STAINLESS STEEL AS NOTED
WOOD BLOCKING
REINFORCED CONCRETE
PLYWOOD
CERAMIC TILE
GYPSUM WALL
BATT INSULATION
RIGID INSULATION
ENLARGED DRAWING TO BE FOUND ELSEWHERE IN CONTRACT DRAWINGS

GENERAL NOTES

1. SEE MECHANICAL / ELECTRICAL DRAWINGS FOR EXACT LOCATION OF CURB AND TYPE OF EQUIPMENT. SEE STRUCTURAL DRAWINGS FOR REINFORCING REQUIREMENTS.

2. REFER TO PARTITION LEGEND FOR TYPICAL WALL TYPES AND FIRE RATINGS.

3. ALL RATED PARTITIONS SHALL EXTEND TO THE UNDERSIDE OF THE STRUCTURAL DECK AND BE SEALED TIGHTLY WITH NON-COMBUSTIBLE SEALANT. ALL FIRE RATED WALLS SHALL BE FILLED WITH AN APPROVED MATERIAL TO PROHIBIT THE PASSAGE OF FIRE.

4. OPENINGS AND RATED PARTITIONS FOR CONDUIT, PIPING, AND OTHER ITEMS SHALL BE FILLED WITH AN APPROVED NON-COMBUSTABLE MATERIAL OR APPROVED PRODUCT TO PROHIBIT THE PASSAGE OF FIRE AND SMOKE.

5. ALL GYPSUM WALL BOARD SOFFITS AND CEILINGS TO RECEIVE SAME PAINT FINISH AS THE ROOM UNLESS OTHERWISE NOTED.

6. PROVIDE BLOCKING AND BRACING IN ALL STUD WALLS, CHASE WALLS, AND FURRED WALLS TO SUPPORT FIXTURES, ACCESSORIES, GRAB BARS, HAND RAILS, ETC. SUCH BLOCKING SHALL BE FIRE RETARDANT.

7. ALL EXPOSED GYPSUM EDGES SHALL HAVE METAL TRIM EDGES UNLESS OTHERWISE NOTED.

8. SEE SPECIFICATIONS FOR ALL INTERIOR AND EXTERIOR SIGNAGE REQUIREMENTS.

9. ALL DIMENSIONS ARE SHOWN TO FACE OF FINISH OR CENTERLINE OF COLUMN GRID UNLESS OTHERWISE NOTED. DIMENSIONS NOTED AS "CLEAR" SHALL BE FROM FINISH FACE TO FINISH FACE.

10. LICENSES AND PERMITS:
THE CONTRACTOR IS RESPONSIBLE FOR OBTAINING ALL LICENSES, PERMITS, ETC AND PAYING FEES FOR SAME TO ALL LOCAL, STATE AND FEDERAL AGENCIES HAVING JURISDICTION AT NO ADDITIONAL COST TO THE OWNER.

11. COORDINATION OF WORK:
A. THE CONTRACTOR HAS THE RESPONSIBILITY TO COORDINATE THE WORK OF SUBCONTRACTORS TO SUIT THE PROJECT CONDITIONS. THE CONTRACTSCOPE OF WORK SHALL INCLUDE ALL WORK REQUIRED TO PROVIDE A FINISHED CLEAN AND NEAT APPEARANCE WHETHER OR NOT THE WORK (INCLUDING MISCELLANEOUS MATERIALS, CLOSURES, APPURTANCES, EQUIPMENT, FASTENERS, ETC) IS SHOWN IN THE CONTRACT DRAWINGS AND SPECIFICATIONS.
B. VERIFY AND COORDINATE LOCATION OF ALL EQUIPMENT WITH ELECTRICAL AND MECHANICAL DRAWINGS. PROVIDE COORDINATION DRAWINGS SHOWING FINAL LAYOUTS OF UTILITIES AND EQUIPMENT WITH PROPOSED SOLUTIONS TO ANY CONFLICTS OF CLEARANCE PROBLEMS.
C. VERIFY LOCATION FOR ALL FLOOR AND WALL PENETRATIONS WITH STRUCTURAL, MECHANICAL AND ELECTRICAL DRAWINGS AND INCLUDE SIZE AND LOCATION DATA WITH COORDINATION DRAWINGS. PROVIDE UL APPROVED FIRE-STOPPING SYSTEMS FOR ALL FLOOR AND CEILING PENETRATIONS. SYSTEMS TO BE APPROVED BY THE ENGINEER.
D. SEE ELECTRICAL DRAWINGS FOR REFLECTED CEILING PLANS AND LIGHTING LAYOUTS.
E. ALL DIMENSIONS SHALL BE FIELD VERIFIED PRIOR TO FABRICATION, ERECTION AND/OR INSTALLATION. THE CONTRACTOR SHALL BE RESPONSIBLE FOR REMEDYING ANY DIMENSIONAL ERRORS IN FABRICATION, ERECTION AND/OR INSTALLATION TO CONFORM WITH THE APPROVED SHOP DRAWINGS.

12. NON-CONFORMANCE:
NON-CONFORMANCE WORK SUCH AS WORK THAT FAILS TO COMPLY WITH THE REQUIREMENTS OF THE CONTRACT DRAWINGS AND/OR SPECIFICATIONS OR WHICH IS DETRIMENTAL TO THE WORK OF OTHER TRADES SHALL BE BROUGHT TO THE ATTENTION OF THE ENGINEER BY THE CONTRACTOR IMMEDIATELY. UPON REVIEW BY THE ENGINEER WITH THE CONTRACTOR, THE CONTRACTOR SHALL SUBMIT A METHOD OF REPAIR OR REPLACEMENT IN WRITING TO THE ENGINEER FOR APPROVAL IN AN EXPEDITIOUS MANNER AS DIRECTED BY THE ENGINEER AT NO ADDITIONAL COST TO THE OWNER.

13. SUBMITTALS:
THE CONTRACTOR SHALL SUBMIT ALL SHOP DRAWINGS, MANUFACTURER'S DATA, SAMPLES, (MSDS) ETC. AS CALLED FOR IN THE CONTRACT DRAWINGS AND SPECIFICATIONS OR AS REQUIRED TO ADEQUATELY DESCRIBE ALL COMPONENTS TO BE FURNISHED AND INSTALLED INCLUDING COORDINATION DRAWINGS SHOWING ALL ADJACENT COMPONENTS, METHODS OF FASTENING, ETC. CONTRACTOR SHALL SUPPLY STRUCTURAL CALCULATIONS ALONG WITH DESIGN SHOP DRAWINGS AS INDICATED IN THE SPECIFICATIONS. CALCULATIONS SHALL BE SIGNED AND SEALED BY A PROFESSIONAL ENGINEER LICENSED IN THE STATE OF NORTH CAROLINA.

INDEX OF DRAWINGS

SHEET NO.	TITLE	DWG. NO.
	ARCHITECTURAL GENERAL NOTES, INDEX & CODE NOTES	B200
	NORTH PIER CONTROL HOUSE GENERATOR ROOM FLOOR PLAN	B201
	NORTH PIER CONTROL HOUSE ENTRY LEVEL FLOOR PLAN	B202
	NORTH PIER CONTROL HOUSE CONTROL ROOM FLOOR PLAN	B203
	NORTH PIER CONTROL HOUSE ROOF PLAN	B204
	SOUTH PIER MACHINERY ROOM FLOOR PLAN - ELECTRICAL ROOM	B205
	SOUTH PIER MACHINERY ROOM ROOF PLAN - PEDESTRIAN OUTLOOK	B206
	NORTH PIER CONTROL HOUSE NORTH & EAST ELEVATIONS	B207
	NORTH PIER CONTROL HOUSE WEST & SOUTH ELEVATIONS	B208
	SOUTH PIER MACHINERY ROOM WEST, SOUTH & NORTH ELEVATIONS	B209
	NORTH PIER CONTROL HOUSE BUILDING SECTIONS	B210
	SOUTH PIER MACHINERY ROOM BUILDING SECTIONS	B211
	NORTH PIER CONTROL HOUSE ROOF DETAILS	B212
	NORTH PIER CONTROL HOUSE TERRACOTTA RAINSCREEN, SUNSCREEN & CURTAIN WALL - PLAN DETAILS	B213
	NORTH PIER CONTROL HOUSE TERRACOTTA RAINSCREEN, SUNSCREEN & CURTAIN WALL - SECTION DETAILS 1	B214
	NORTH PIER CONTROL HOUSE TERRACOTTA RAINSCREEN, SUNSCREEN & CURTAIN WALL - SECTION DETAILS 2	B215
	DOOR SCHEDULE AND DETAILS	B216
	FINISH SCHEDULE & PARTITION TYPES	B217
	NORTH PIER CONTROL HOUSE GENERATOR RM, ENTRY LEVEL & CONTROL RM RCP	B218
	SOUTH PIER MACHINERY ROOM ELECTRICAL RM RCP	B219
	NORTH PIER CONTROL HOUSE STAIR PLANS, SECTION & DETAILS	B220
	NORTH PIER CONTROL HOUSE STAIR DETAILS	B221
	NORTH PIER CONTROL HOUSE INTERIOR ELEVATIONS, PLAN & DETAILS	B222

CONTROL HOUSE: THIS PROJECT INVOLVES THE CONSTRUCTION OF A NEW THREE STORY CONTROL HOUSE FOR THE STATE OF NORTH CAROLINA DEPARTMENT OF TRANSPORTATION. THIS CONTROL HOUSE IS PART OF A LARGER PROJECT TO REPLACE THE ALFRED CUNNINGHAM BRIDGE WITH A NEW SINGLE LEAF BASCULE BRIDGE. THE PURPOSE OF THIS CONTROL HOUSE IS TO CONTROL THE OPERATIONS OF THE BASCULE BRIDGE. THE LOWER LEVEL WILL HOUSE THE BACK-UP GENERATOR, THE ENTRY LEVEL WILL HOUSE THE ELECTRICAL ROOM & TOILET ROOM AND THE UPPER LEVEL WILL HOUSE THE CONTROL ROOM. THE LOWER AND ENTRY LEVELS WILL NOT BE OCCUPIED, THE UPPER LEVEL WILL BE OCCUPIED BY ONE PERSON AT A TIME. THE MAXIMUM OCCUPANCY AT SHIFT CHANGES WILL BE TWO PEOPLE.

APPLICABLE CODE: 2002 NORTH CAROLINA STATE BUILDING CODE (NCSBC)

CODE REFERENCES [NCSBC]

PROPOSED OCCUPANCY CLASSIFICATION: B - BUSINESS (BRIDGE CONTROL HOUSE, SIMILAR TO AIRPORT TRAFFIC CONTROL TOWER) [304.1]
PROPOSED CONSTRUCTION TYPE: TYPE IIB [603 TABLE 601]

BUILDING CLASSIFICATIONS AND LIMITATIONS: TYPE IIB, USE GROUP B [TABLE 503]

MAXIMUM AREA PER FLOOR: ALLOWABLE: 23,000 SF — PROVIDED: LOWER LEVEL: 600 SF; ENTRY LEVEL: 600 SF; UPPER LEVEL: 600 SF
MAXIMUM HEIGHT: ALLOWABLE: 4 STORIES — PROVIDED: 3 STORIES

FIRE RESISTANCE RATING REQUIREMENTS FOR BUILDING ELEMENTS [TABLE 601]

STRUCTURAL FRAME	0 HOURS	
FLOOR CONSTRUCTION	0 HOURS	
ROOF CONSTRUCTION	0 HOURS	
MAXIMUM TRAVEL DISTANCE TO EXIT:	200 FEET	[TABLE 1004.2.4]
MAXIMUM COMMON PATH OF EGRESS TRAVEL:	75 FEET	[1004.2.5]
DEAD END CORRIDOR LIMIT:	20 FEET	[1004.3.2.3]
ROOF COVERING CLASSIFICATION:	CLASS C	[TABLE 1505.1]

PROJECT NO. B-2532
CRAVEN COUNTY
STATION: 31+21.29 -L-

STATE OF NORTH CAROLINA
DEPARTMENT OF TRANSPORTATION
RALEIGH, NC

ARCHITECTURAL GENERAL NOTES, INDEX & CODE NOTES

HNTB — HNTB NORTH CAROLINA, P.C.
343 E. Six Forks Rd., Suite 200, Raleigh, N.C. 27609

DRAWN BY SSJ DATE 10/03/06
CHECKED BY RAP DATE 10/03/06
DWG. NO. B200

REVISIONS					
NO.	BY	DATE	NO.	BY	DATE
1			3		
2			4		

SHEET NO. S-221
TOTAL SHEETS 348

$$$$USERNAME$$$$
$$$$$SYSTIME$$$$
$$$$$$$$$$$$DGN$$$$$$$$$$$$$$$$$

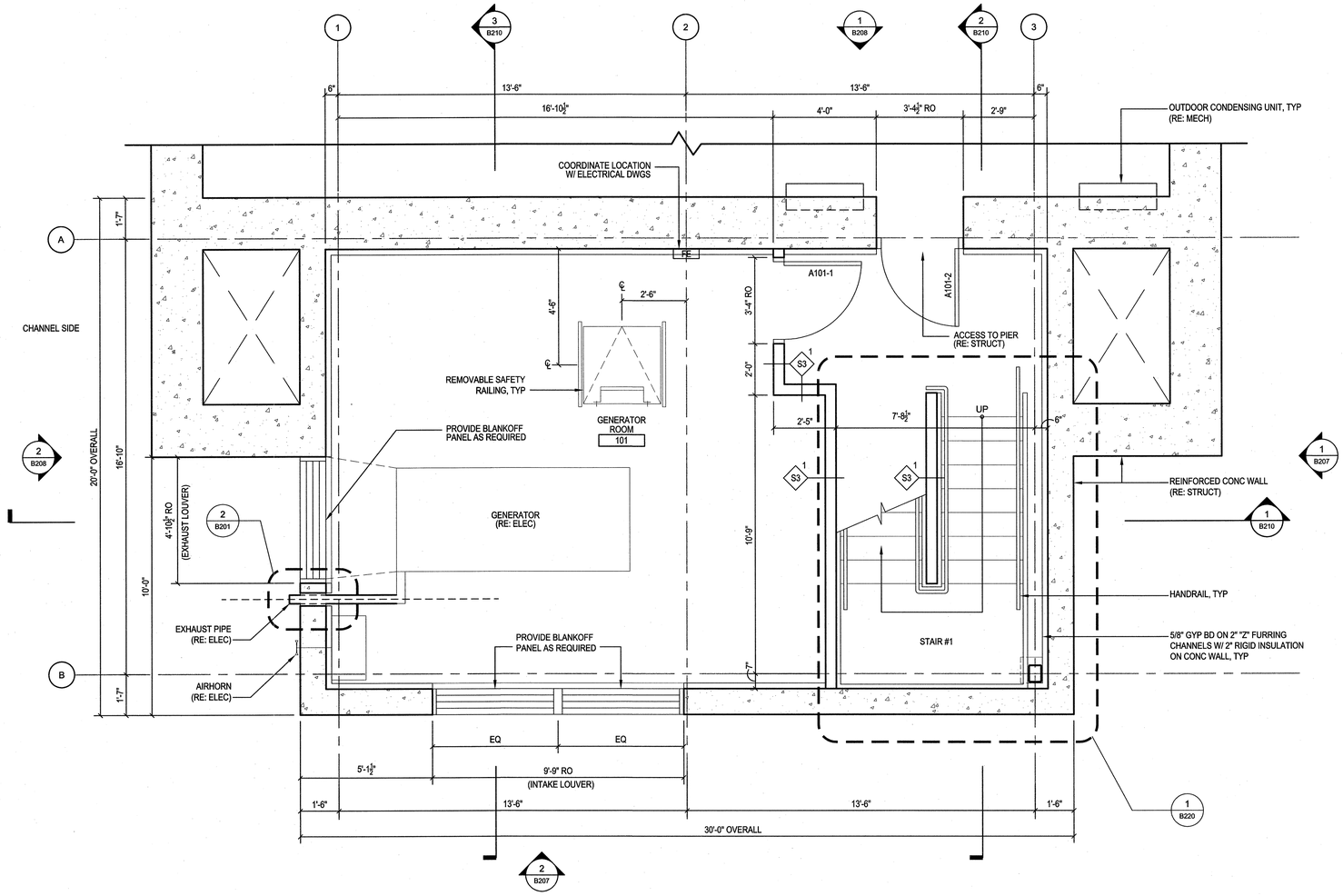

1 B201 GENERATOR ROOM FLOOR PLAN (LOWER LEVEL)
3/8"=1'-0"

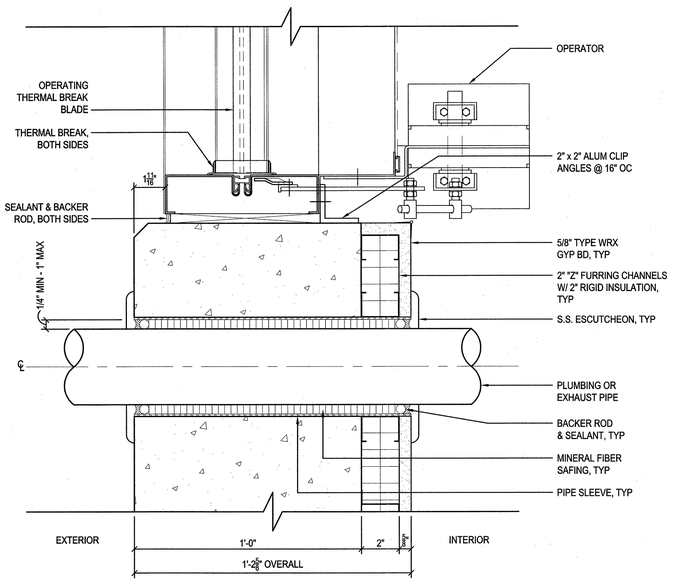

2 B201 TYPICAL PIPE PENETRATION DETAIL THRU CONC WALL & OPERATING LOUVER JAMB DETAIL
3"=1'-0"

PROJECT NO. B-2532

CRAVEN **COUNTY**

STATION: 31+21.29 -L-

STATE OF NORTH CAROLINA
DEPARTMENT OF TRANSPORTATION
RALEIGH, NC

NORTH PIER CONTROL HOUSE GENERATOR ROOM FLOOR PLAN

NORTH CAROLINA PROFESSIONAL ENGINEER SEAL 12916 PAUL J. BARBER 10/3/06

HNTB NORTH CAROLINA, P.C.
343 E. Six Forks Rd., Suite 200, Raleigh, N.C. 27609

DRAWN BY SSJ DATE 10/03/06
CHECKED BY RAP DATE 10/03/06
DWG. NO. **B201**

REVISIONS						SHEET NO.
NO.	BY	DATE	NO.	BY	DATE	S-222
1			3			TOTAL SHEETS
2			4			348

$$$$USERNAME$$$$
$$$$FILENAME$$$$
$$$$DESIGN$$$$

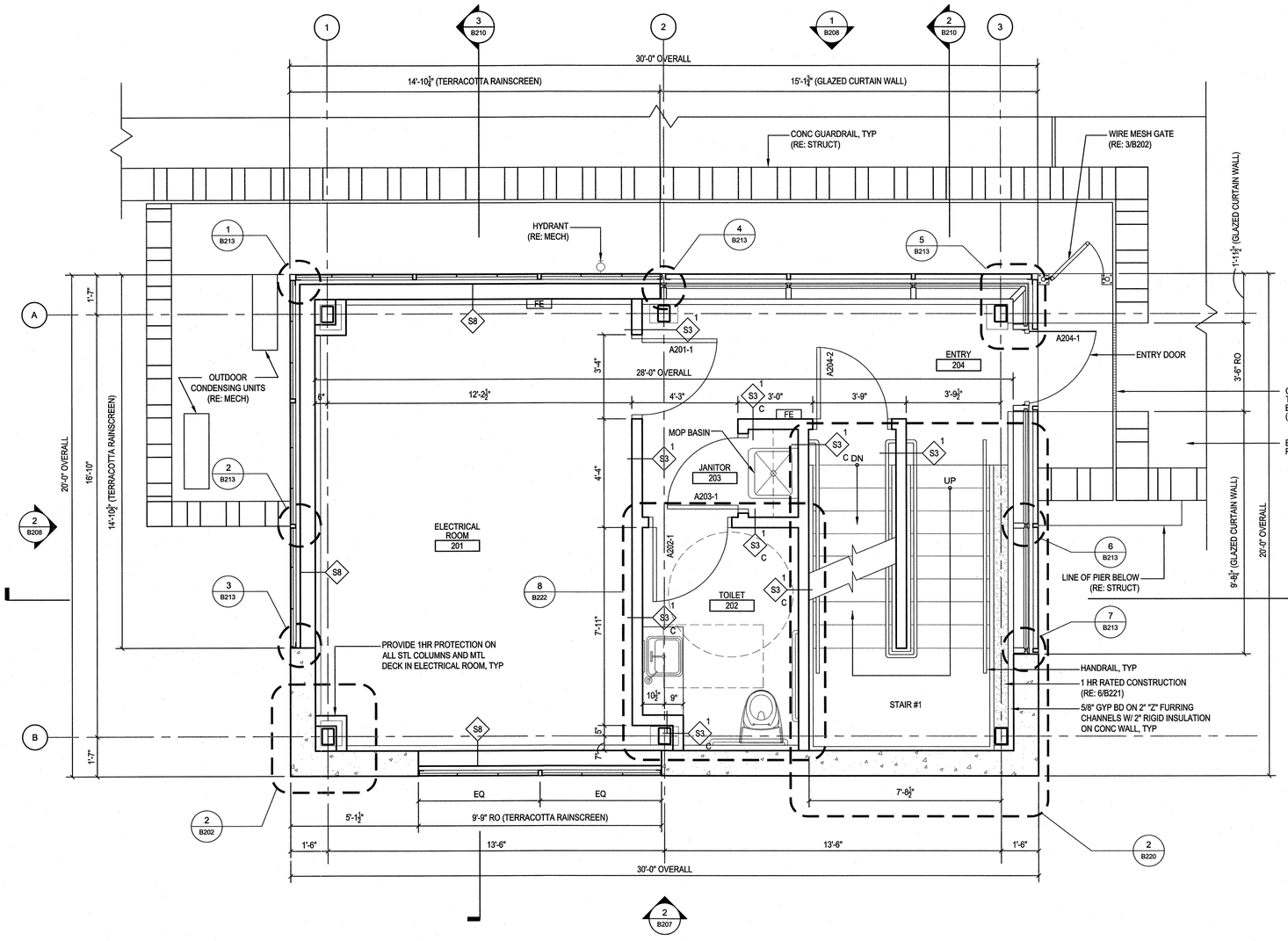

1 B202 ENTRY LEVEL FLOOR PLAN

3/8"=1'-0"

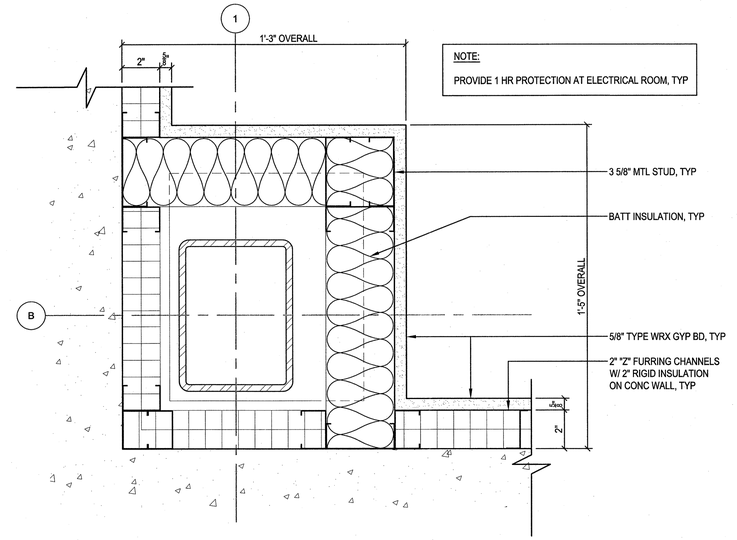

2 B202 PLAN DETAIL @ ELECTRICAL ROOM

3"=1'-0"

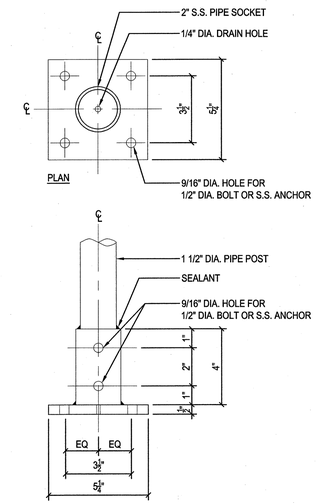

5 B202 POST SOCKET DETAIL

3"=1'-0"

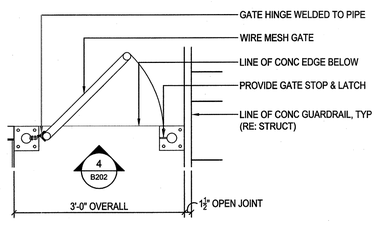

3 B202 EXTERIOR WIRE MESH GATE - PLAN DETAIL

3/4"=1'-0"

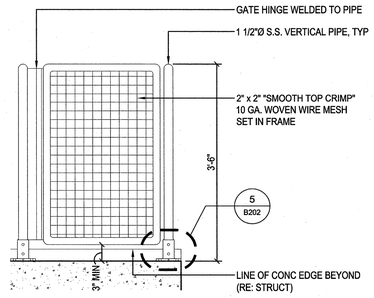

4 B202 EXTERIOR WIRE MESH GATE - ELEVATION

3/4"=1'-0"

PROJECT NO. B-2532

CRAVEN **COUNTY**

STATION: 31+21.29 -L-

STATE OF NORTH CAROLINA
DEPARTMENT OF TRANSPORTATION
RALEIGH, NC

NORTH PIER CONTROL HOUSE ENTRY LEVEL FLOOR PLAN

NORTH CAROLINA PROFESSIONAL SEAL 12916 ENGINEER PAUL J. BARBER 10/3/06

HNTB NORTH CAROLINA, P.C.
343 E. Six Forks Rd., Suite 200, Raleigh, N.C. 27609

DRAWN BY SSJ DATE 10/03/06
CHECKED BY RAP DATE 10/03/06

DWG. NO. **B202**

REVISIONS						SHEET NO.
NO.	BY	DATE	NO.	BY	DATE	S-273
1			3			TOTAL SHEETS
2			4			348

$$$$USERNAME$$$$
$$$$SYSTIME$$$$
$$$$DGN$$$$

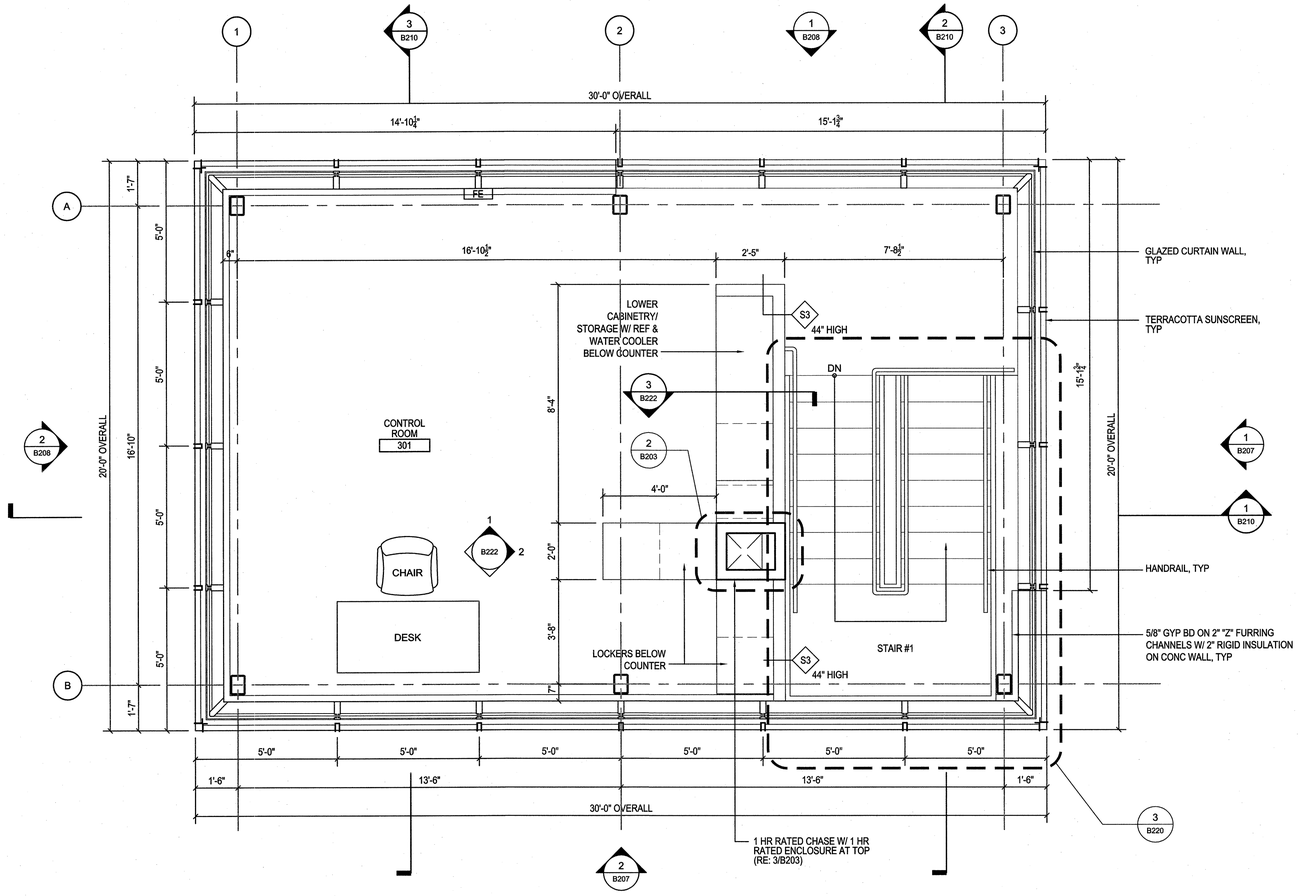

1 B203 CONTROL ROOM FLOOR PLAN
3/8"=1'-0"

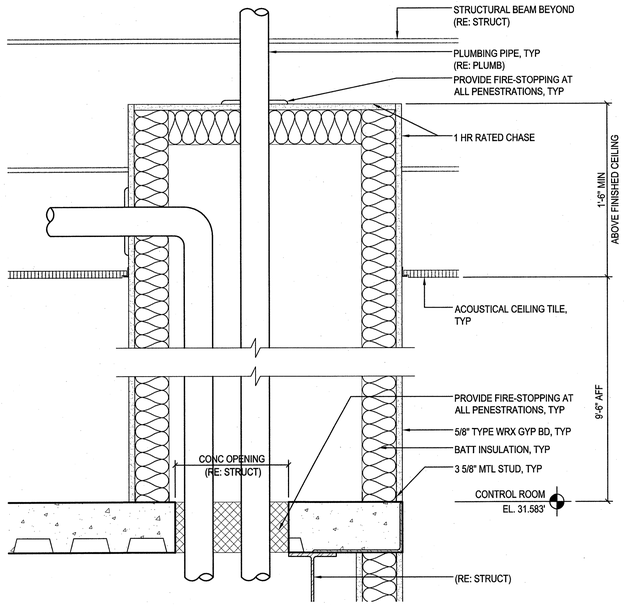

3 B203 SECTION DETAIL @ CHASE
1 1/2"=1'-0"

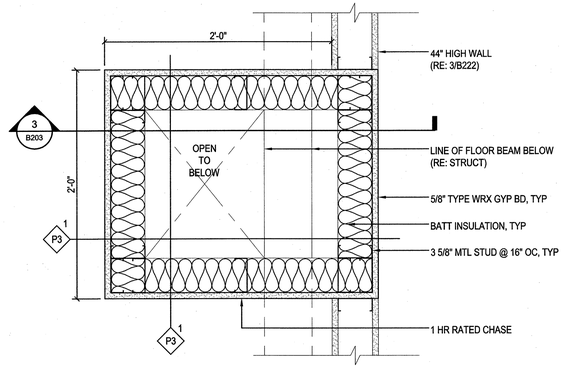

2 B203 PLAN DETAIL @ CHASE
1 1/2"=1'-0"

N

PROJECT NO. B-2532

CRAVEN **COUNTY**

STATION: 31+21.29 -L-

STATE OF NORTH CAROLINA
DEPARTMENT OF TRANSPORTATION
RALEIGH, NC

NORTH PIER CONTROL HOUSE CONTROL ROOM FLOOR PLAN

NORTH CAROLINA PROFESSIONAL SEAL 12916 ENGINEER PAUL J. BARBER 10/3/06

HNTB HNTB NORTH CAROLINA, P.C.
343 E. Six Forks Rd., Suite 200, Raleigh, N.C. 27609

DRAWN BY SSJ DATE 10/03/06
CHECKED BY RAP DATE 10/03/06

DWG. NO. **B203**

REVISIONS						SHEET NO.
NO.	BY	DATE	NO.	BY	DATE	S-77A
1			3			TOTAL SHEETS
2			4			348

$$$$USERNAME$$$$
$$$$SYSTIME$$$$
$$$$SYSTIMEDISP$$$$
$$$$DGNFILE$$$$
$$$$MODEL$$$$
$$$$PLOTSCALE$$$$
$$$$PLOTDATE$$$$
$$$$PLOTSTAMP$$$$
$$$$PLOTSTYLETABLE$$$$
$$$$LAYOUT$$$$
$$$$XREFPLOT$$$$
$$$$XREFDGN$$$$
$$$$XREFRFA$$$$
$$$$XREFTXT$$$$
$$$$XREFPDF$$$$
$$$$XREFIMAGE$$$$
$$$$XREFPROPERTIES$$$$
$$$$XREFLOG$$$$
$$$$ACTIVEVIEWS$$$$
$$$$ACTIVEDGN$$$$
$$$$ACTIVEDGNPATH$$$$
$$$$ACTIVEDGNPROPERTIES$$$$
$$$$ACTIVEDGNLOG$$$$
$$$$ACTIVEDGNSAVEDVIEWS$$$$
$$$$ACTIVEDGNSAVEDVIEWSPROPERTIES$$$$
$$$$ACTIVEDGNSAVEDVIEWSLOG$$$$
$$$$ACTIVEDGNSAVEDVIEWSSAVEDVIEWS$$$$
$$$$ACTIVEDGNSAVEDVIEWSSAVEDVIEWSPROPERTIES$$$$
$$$$ACTIVEDGNSAVEDVIEWSSAVEDVIEWSLOG$$$$

1 B204 ROOF PLAN
3/8"=1'-0"

2 B204 PIPE PENETRATION DETAIL
3"=1'-0"

3 B204 STANDING SEAM DETAIL
3"=1'-0"

PROJECT NO. B-2532

CRAVEN **COUNTY**

STATION: 31+21.29 -L-

STATE OF NORTH CAROLINA
DEPARTMENT OF TRANSPORTATION
RALEIGH, NC

NORTH PIER CONTROL HOUSE
ROOF PLAN

HNTB
HNTB NORTH CAROLINA, P.C.
343 E. Six Forks Rd., Suite 200, Raleigh, N.C. 27609

DRAWN BY SSJ DATE 10/03/06
CHECKED BY RAP DATE 10/03/06
DWG. NO. **B204**

REVISIONS					
NO.	BY	DATE	NO.	BY	DATE
1			3		
2			4		

SHEET NO. S-225
TOTAL SHEETS 348

$$$$USERNAME$$$$
$$$$$SYSTIME$$$$$
$$$$$$$$$$$$$$DGN$$$$$$$$$$$$$$$$$$

1 B205 FLOOR PLAN - ELECTRICAL ROOM
3/8"=1'-0"

N

PROJECT NO. B-2532

CRAVEN **COUNTY**

STATION: 31+21.29 -L-

STATE OF NORTH CAROLINA
DEPARTMENT OF TRANSPORTATION
RALEIGH, NC

SOUTH PIER MACHINERY ROOM FLOOR PLAN - ELECTRICAL ROOM

HNTB HNTB NORTH CAROLINA, P.C.
343 E. Six Forks Rd., Suite 200, Raleigh, N.C. 27609

DRAWN BY SSJ	DATE 10/03/06	DWG. NO. **B205**	
CHECKED BY RAP	DATE 10/03/06		

REVISIONS					
NO.	BY	DATE	NO.	BY	DATE
1			3		
2			4		

SHEET NO. S-236
TOTAL SHEETS 348

$$$$USERNAME$$$$
$$$$$$SYSTIME$$$$
$$$$$$$$$$$$$$DGN$$$$$$$$$$$$$$$$$$$

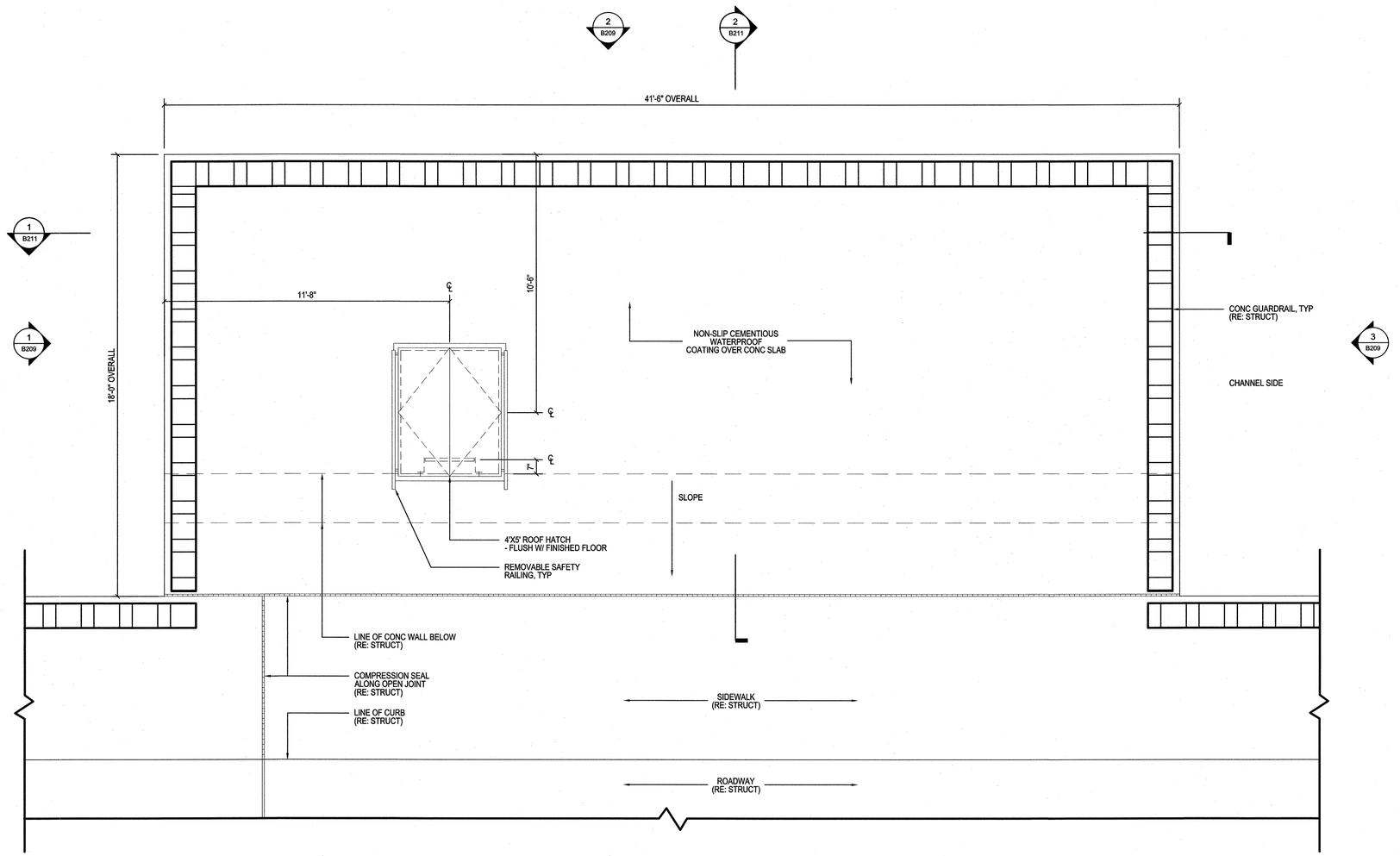

1 / B206 ROOF PLAN - PEDESTRIAN OUTLOOK

3/8"=1'-0"

N

$$$$USERNAME$$$$
$$$$SYSTIME$$$$
$$$$DGN$$$$

PROJECT NO. B-2532

CRAVEN COUNTY

STATION: 31+21.29 -L-

STATE OF NORTH CAROLINA
DEPARTMENT OF TRANSPORTATION
RALEIGH, NC

SOUTH PIER MACHINERY ROOM ROOF PLAN – PEDESTRIAN OUTLOOK

NORTH CAROLINA PROFESSIONAL SEAL 12916 ENGINEER PAUL J. BARBER 10/3/06

HNTB HNTB NORTH CAROLINA, P.C.
343 E. Six Forks Rd., Suite 200, Raleigh, N.C. 27609

DRAWN BY SSJ DATE 10/03/06
CHECKED BY RAP DATE 10/03/06

DWG. NO. B206

REVISIONS						SHEET NO.
NO.	BY	DATE	NO.	BY	DATE	S-227
1			3			TOTAL SHEETS
2			4			348

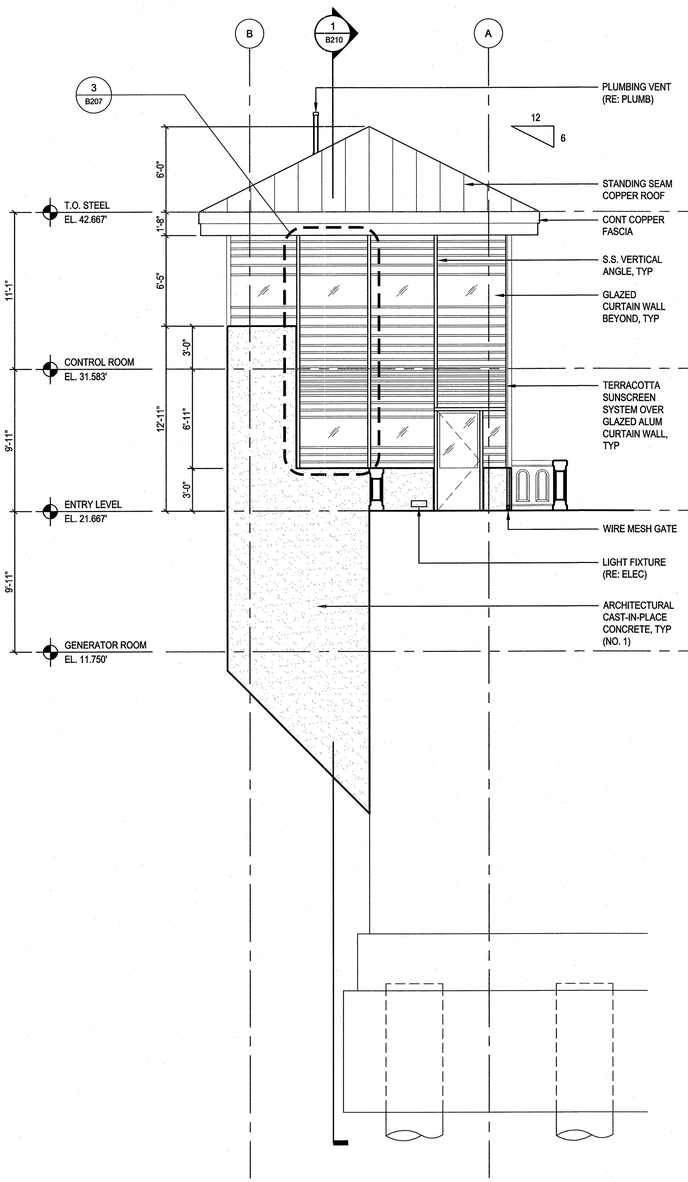

1 B207 NORTH ELEVATION
3/16"=1'-0"

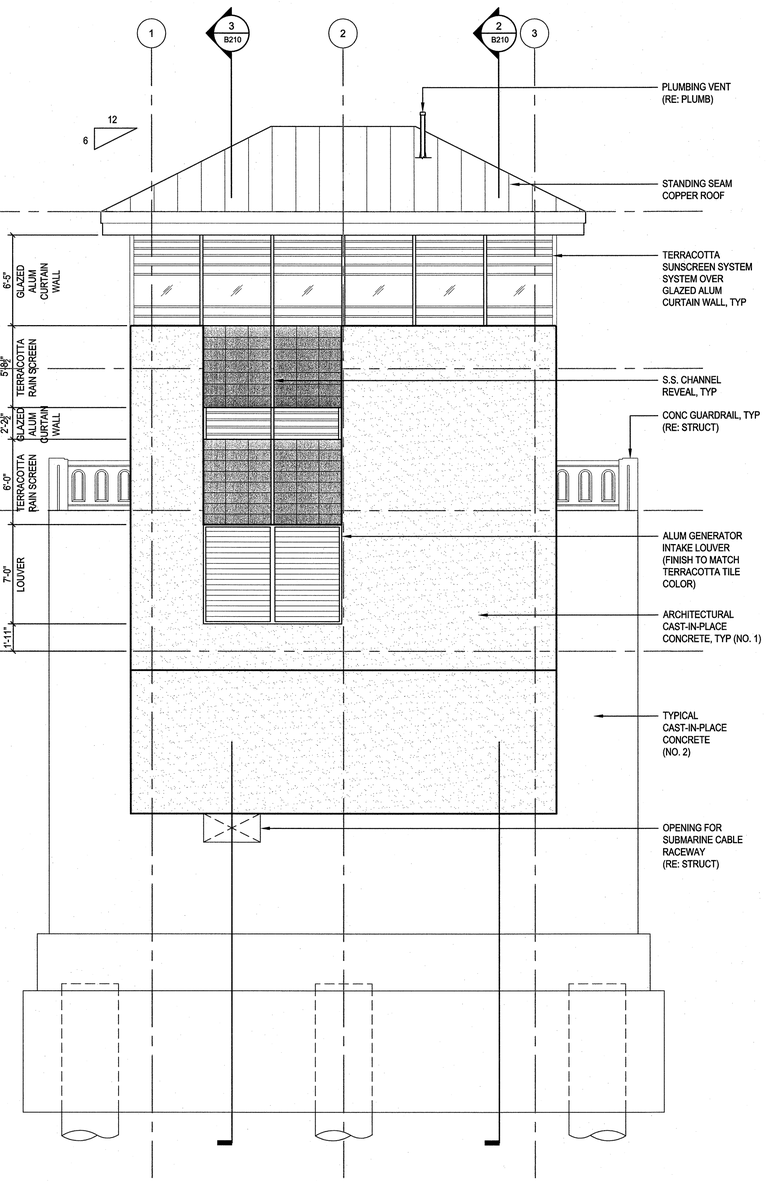

2 B207 EAST ELEVATION
3/16"=1'-0"

CONCRETE FINISH KEY

- FINISH NO. 1 - WHITE CONC ARCHITECTURAL CAST-IN-PLACE
- FINISH NO. 2 - GRAY CONC TYPICAL CAST-IN-PLACE

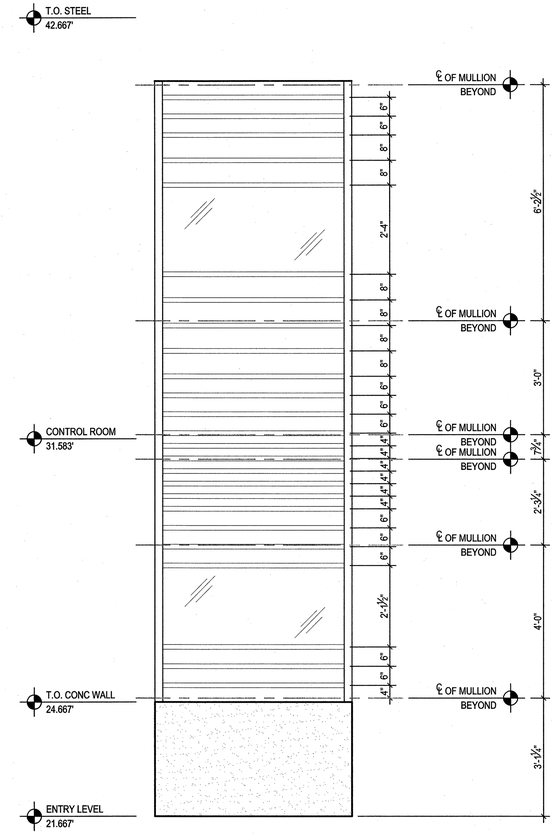

3 B207 TYPICAL BAGUETTE SPACING DIAGRAM
1/2"=1'-0"

PROJECT NO. B-2532

CRAVEN COUNTY

STATION: 31+21.29 -L-

STATE OF NORTH CAROLINA
DEPARTMENT OF TRANSPORTATION
RALEIGH, NC

NORTH PIER CONTROL HOUSE NORTH & EAST ELEAVTIONS

NORTH CAROLINA PROFESSIONAL ENGINEER SEAL 12916 PAUL J. BARBER 10/03/06

HNTB HNTB NORTH CAROLINA, P.C.
343 E. Six Forks Rd., Suite 200, Raleigh, N.C. 27609

DRAWN BY SSJ DATE 10/03/06
CHECKED BY RAP DATE 10/03/06
DWG. NO. B207

REVISIONS						SHEET NO.
NO.	BY	DATE	NO.	BY	DATE	S-238
1			3			TOTAL SHEETS
2			4			348

$$$$USERNAME$$$$
$$$$SYSTIME$$$$
$$$$DGN$$$$

1
B208
WEST ELEVATION
3/16"=1'-0"

2
B208
SOUTH ELEVATION
3/16"=1'-0"

CONCRETE FINISH KEY

- FINISH NO. 1 - WHITE CONC ARCHITECTURAL CAST-IN-PLACE
- FINISH NO. 2 - GRAY CONC TYPICAL CAST-IN-PLACE

PROJECT NO. B-2532

CRAVEN COUNTY

STATION: 31+21.29 -L-

NORTH CAROLINA PROFESSIONAL ENGINEER SEAL 12916 PAUL J. BARBER
10/3/06

STATE OF NORTH CAROLINA
DEPARTMENT OF TRANSPORTATION
RALEIGH, NC

NORTH PIER CONTROL HOUSE
WEST & SOUTH ELEVATIONS

HNTB HNTB NORTH CAROLINA, P.C.
343 E. Six Forks Rd., Suite 200, Raleigh, N.C. 27609

DRAWN BY	SSJ	DATE	10/03/06
CHECKED BY	RAP	DATE	10/03/06

DWG. NO. B208

REVISIONS					
NO.	BY	DATE	NO.	BY	DATE
1			3		
2			4		

SHEET NO. S-229
TOTAL SHEETS 348

$$$USERNAME$$$$
$$$$$SYSTIME$$$$$
$$$$$$$$$$$$$DGN$$$$$$$$$$$$$$$$$$$

CONCRETE FINISH KEY

FINISH NO. 1 - WHITE CONC ARCHITECTURAL CAST-IN-PLACE

FINISH NO. 2 - GRAY CONC TYPICAL CAST-IN-PLACE

1 / B209 **SOUTH ELEVATION**
3/16"=1'-0"

2 / B209 **WEST ELEVATION**
3/16"=1'-0"

3 / B209 **NORTH ELEVATION**
3/16"=1'-0"

PROJECT NO. B-2532

CRAVEN **COUNTY**

STATION: 31+21.29 -L-

NORTH CAROLINA PROFESSIONAL ENGINEER SEAL 12916 PAUL J. BARBER 10/3/06

STATE OF NORTH CAROLINA
DEPARTMENT OF TRANSPORTATION
RALEIGH, NC

SOUTH PIER MACHINERY ROOM
WEST, SOUTH & NORTH
ELEVATIONS

HNTB HNTB NORTH CAROLINA, P.C.
343 E. Six Forks Rd., Suite 200, Raleigh, N.C. 27609

DRAWN BY SSJ DATE 10/03/06
CHECKED BY RAP DATE 10/03/06
DWG. NO. **B209**

REVISIONS					
NO.	BY	DATE	NO.	BY	DATE
1			3		
2			4		

SHEET NO. S-230
TOTAL SHEETS 348

$$$$USERNAME$$$$
$$$$$SYSTIME$$$$
$$$$$$$$$$$$$DGN$$$$$$$$$$$$$$$$$$$

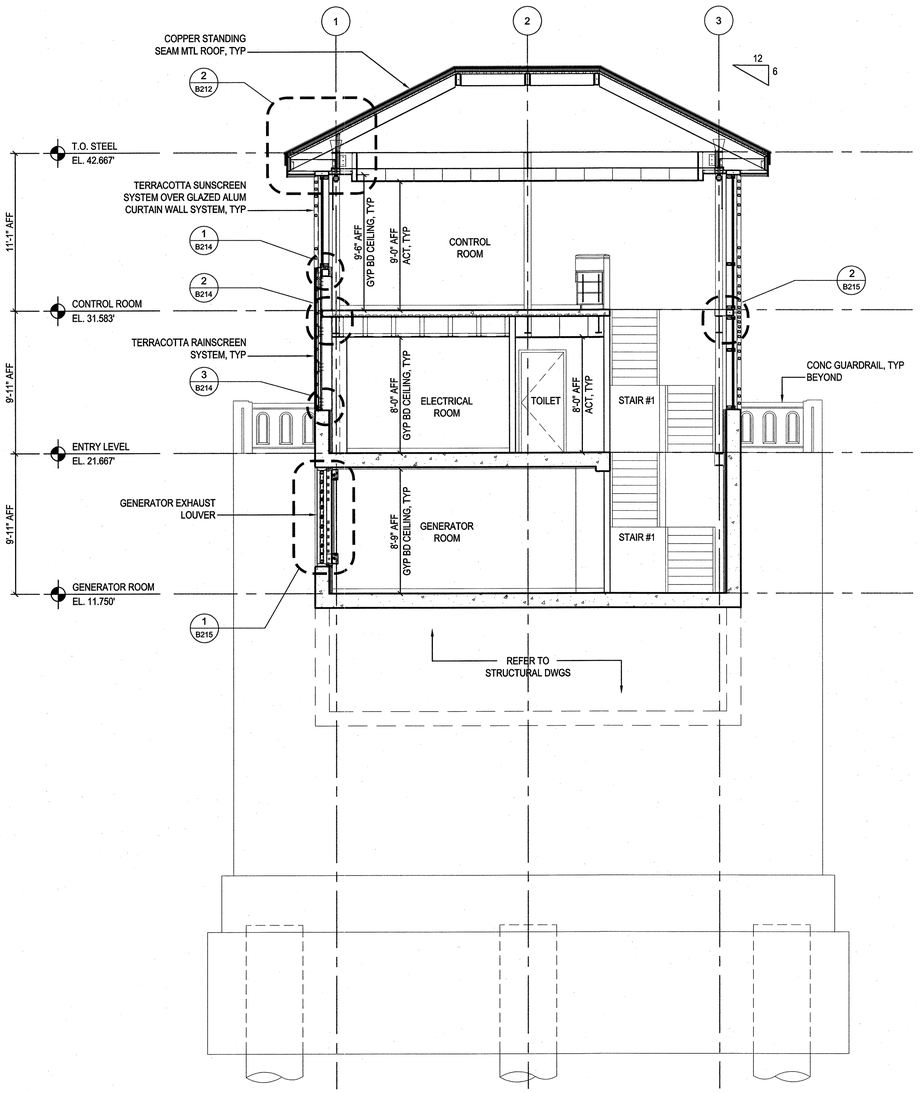

1 B210 SOUTH-NORTH SECTION
3/16"=1'-0"

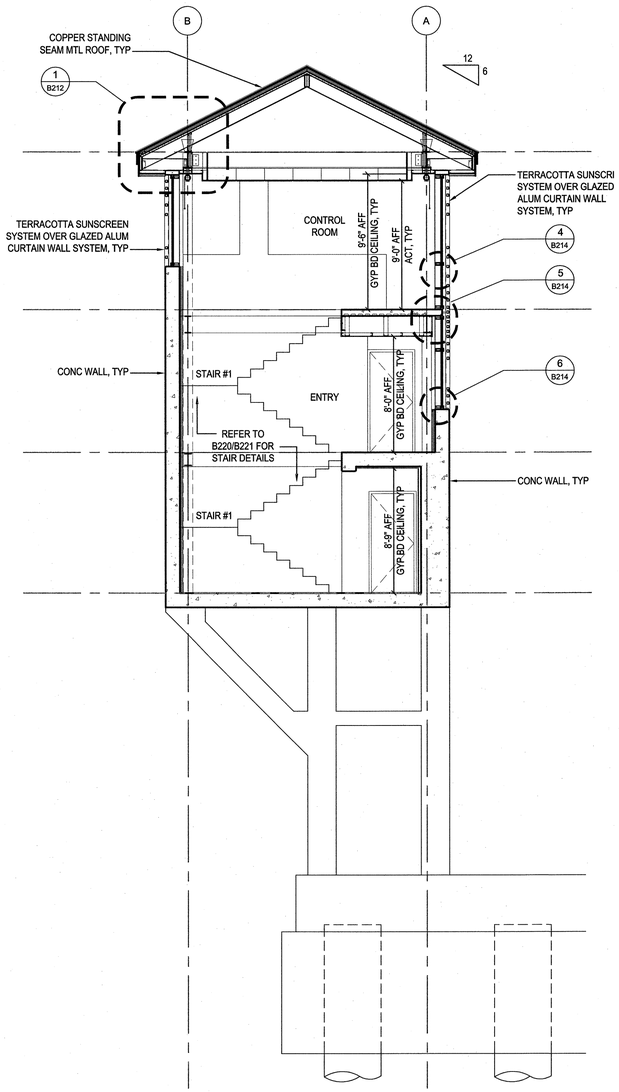

2 B210 EAST-WEST SECTION
3/16"=1'-0"

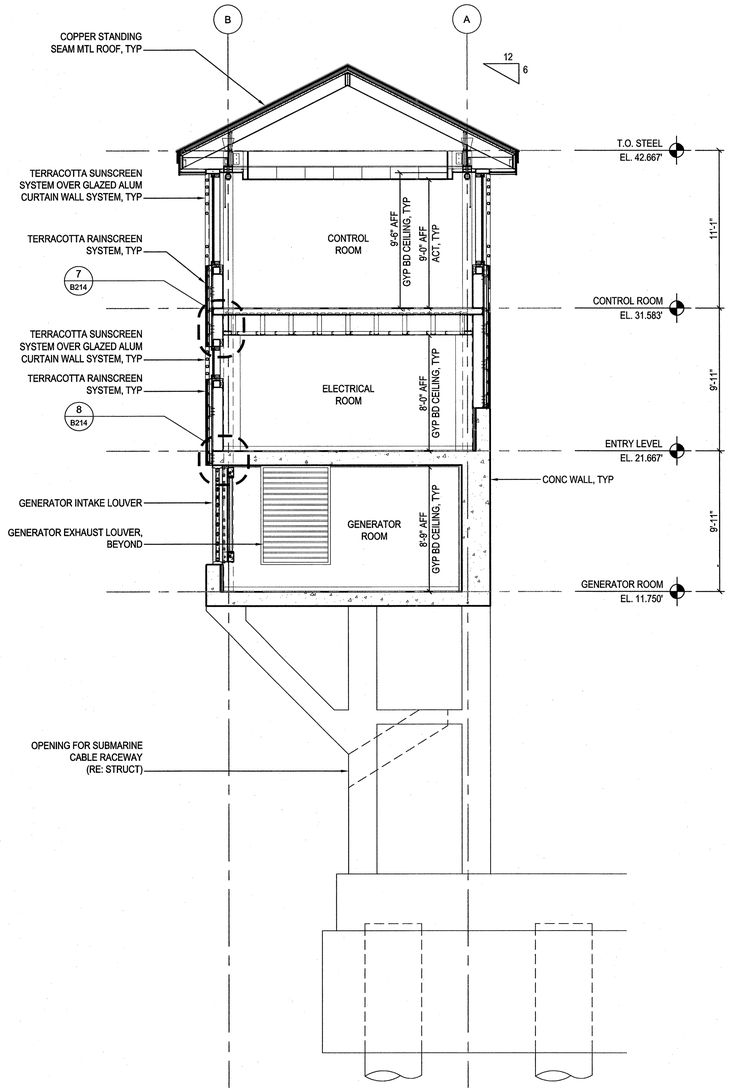

3 B210 EAST-WEST SECTION
3/16"=1'-0"

PROJECT NO. B-2532

CRAVEN **COUNTY**

STATION: 31+21.29 -L-

STATE OF NORTH CAROLINA
DEPARTMENT OF TRANSPORTATION
RALEIGH, NC

NORTH PIER CONTROL HOUSE BUILDING SECTIONS

NORTH CAROLINA PROFESSIONAL SEAL 12916 ENGINEER PAUL J. BARBER 10/3/06

HNTB NORTH CAROLINA, P.C.
343 E. Six Forks Rd., Suite 200, Raleigh, N.C. 27609

DRAWN BY SSJ DATE 10/03/06
CHECKED BY RAP DATE 10/03/06
DWG. NO. **B210**

REVISIONS						SHEET NO.
NO.	BY	DATE	NO.	BY	DATE	S-231
1			3			TOTAL SHEETS
2			4			348

$$$$USERNAME$$$$$
$$$$$$SYSTIME$$$$$
$$$$$$$$$$$$$$$$DGN$$$$$$$$$$$$$$$$

1 / B211 **SECTION**
3/16"=1'-0"

2 / B211 **SECTION**
3/16"=1'-0"

PROJECT NO. B-2532

CRAVEN **COUNTY**

STATION: 31+21.29 -L-

STATE OF NORTH CAROLINA
DEPARTMENT OF TRANSPORTATION
RALEIGH, NC

SOUTH PIER MACHINERY ROOM
BUILDING SECTIONS

NORTH CAROLINA PROFESSIONAL SEAL 12916 ENGINEER PAUL J. BARBER
10/3/06

HNTB HNTB NORTH CAROLINA, P.C.
343 E. Six Forks Rd., Suite 200, Raleigh, N.C. 27609

DRAWN BY SSJ DATE 10/03/06
CHECKED BY RAP DATE 10/03/06
DWG. NO. **B211**

REVISIONS					
NO.	BY	DATE	NO.	BY	DATE
1			3		
2			4		

SHEET NO. S-232
TOTAL SHEETS 348

$$$$USERNAME$$$$
$$$$$SYSTIME$$$$$
$$$$$$$$$$$$$DGN$$$$$$$$$$$$$$$$$$

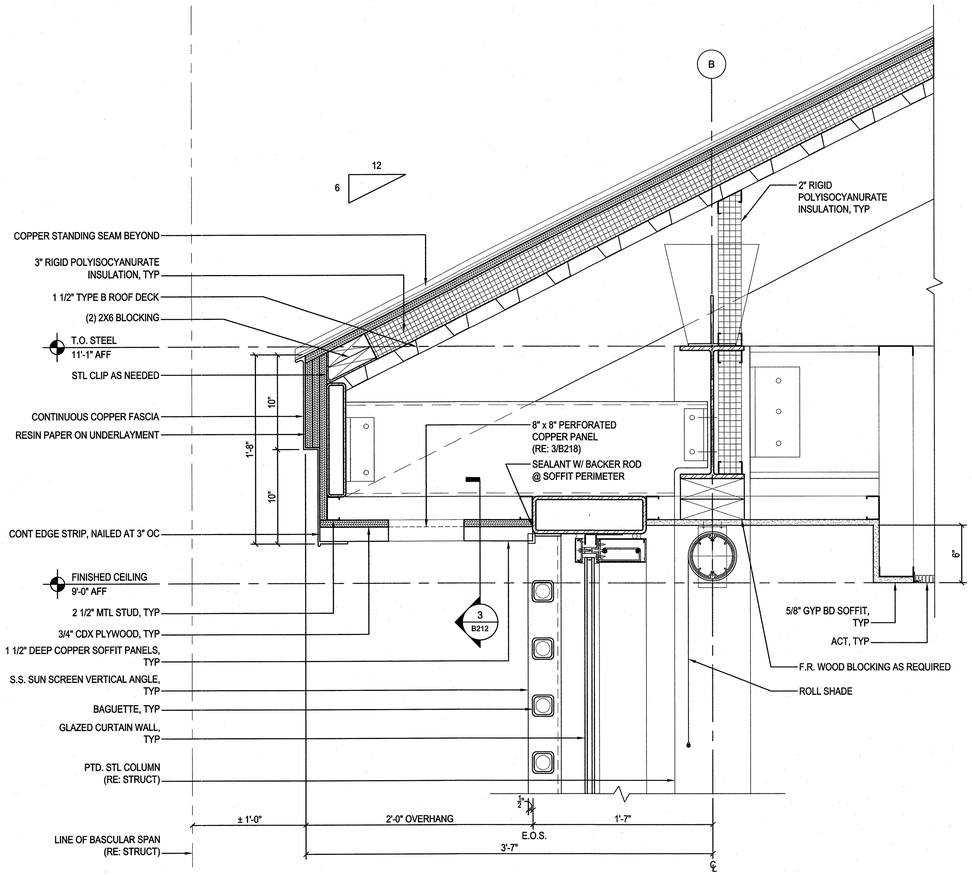

1 B212 ROOF OVERHANG DETAIL

1 1/2"=1'-0"

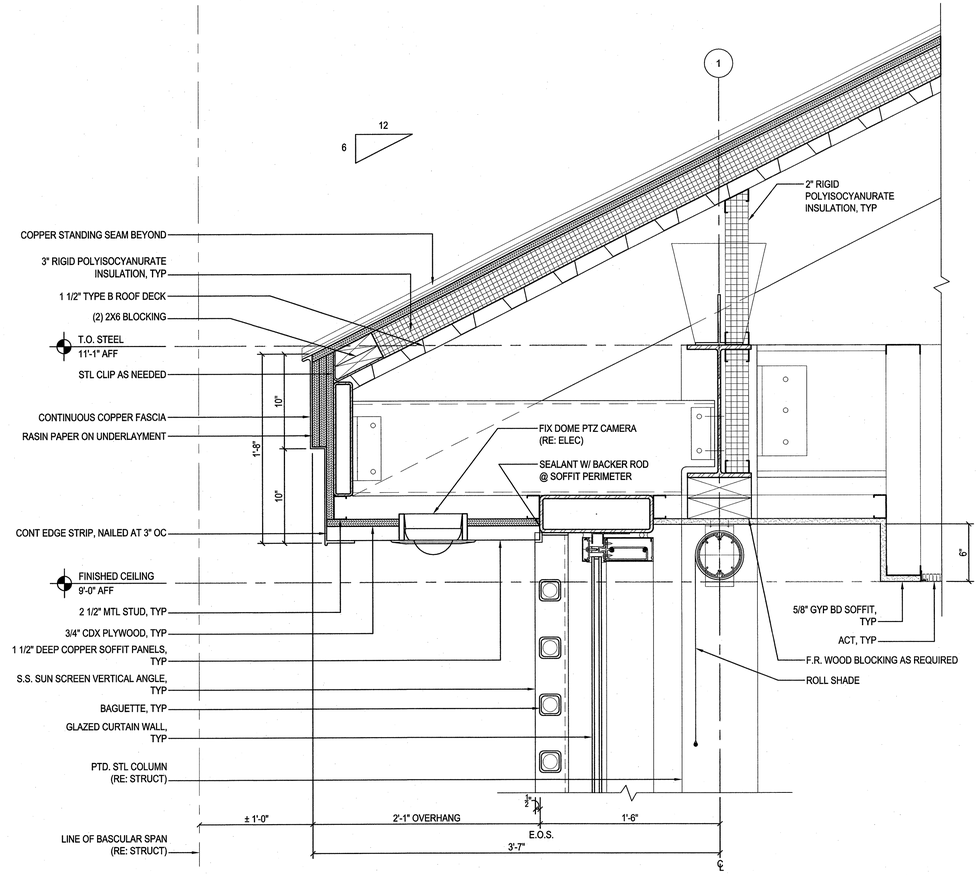

2 B212 ROOF OVERHANG DETAIL

1 1/2"=1'-0"

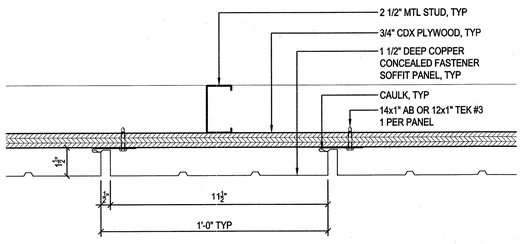

3 B212 TYPICAL COPPER SOFFIT PANEL DETAIL

NTS

PROJECT NO. B-2532

CRAVEN COUNTY

STATION: 31+21.29 -L-

STATE OF NORTH CAROLINA
DEPARTMENT OF TRANSPORTATION
RALEIGH, NC

NORTH PIER CONTROL HOUSE ROOF DETAILS

NORTH CAROLINA PROFESSIONAL SEAL 12916 ENGINEER PAUL J. BARBER 10/3/06

HNTB HNTB NORTH CAROLINA, P.C.
343 E. Six Forks Rd., Suite 200, Raleigh, N.C. 27609

DRAWN BY SSJ DATE 10/03/06
CHECKED BY RAP DATE 10/03/06

DWG. NO. B212

REVISIONS						SHEET NO.
NO.	BY	DATE	NO.	BY	DATE	S-733
1			3			TOTAL SHEETS
2			4			345

$$$$USERNAME$$$$
$$$$SYSTIME$$$$
$$$$DGN$$$$

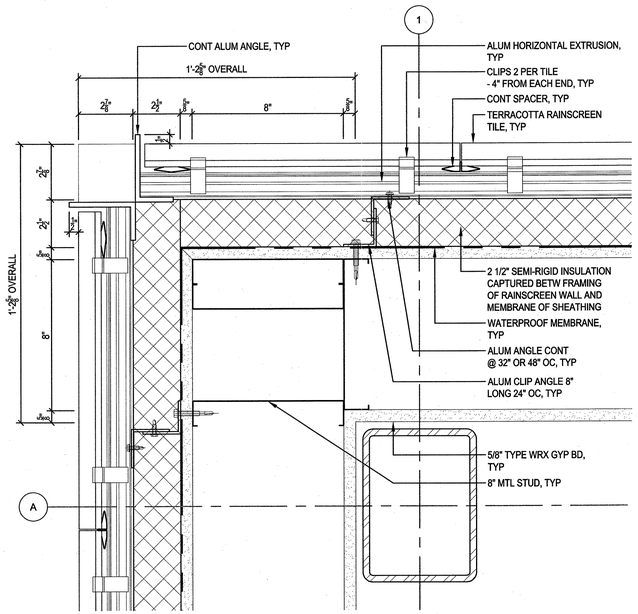

1 B213 TERRACOTTA RAINSCREEN @ CORNER

3"=1'-0"

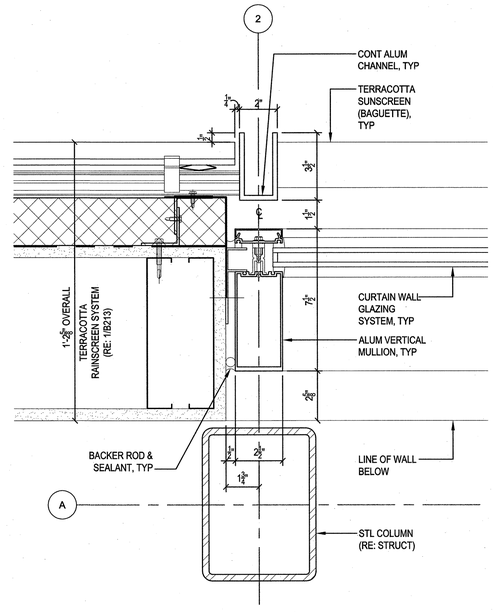

4 B213 TERRACOTTA RAINSCREEN @ CURTAIN WALL SYSTEM

3"=1'-0"

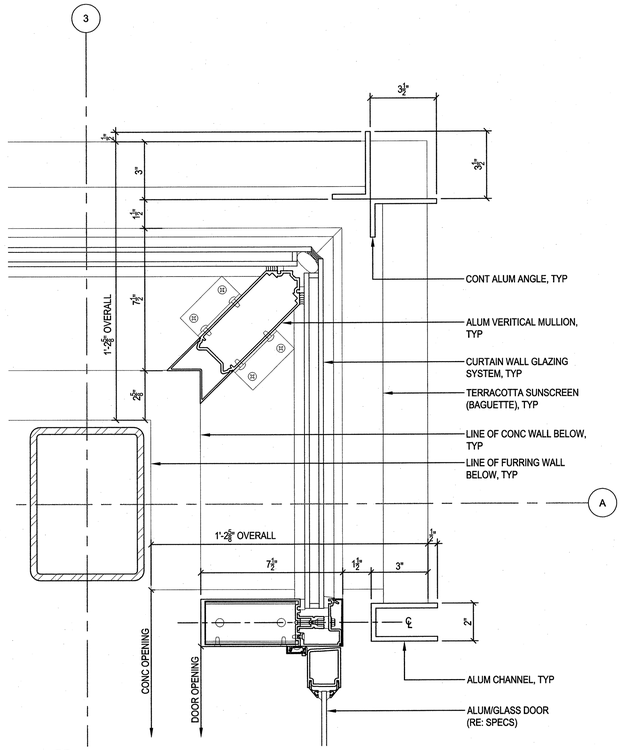

5 B213 CURTAIN WALL SYSTEM @ CORNER & DOOR

3"=1'-0"

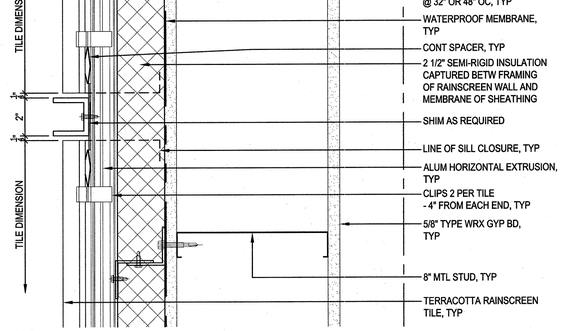

2 B213 TERRACOTTA RAINSCREEN @ 2" REVEAL

3"=1'-0"

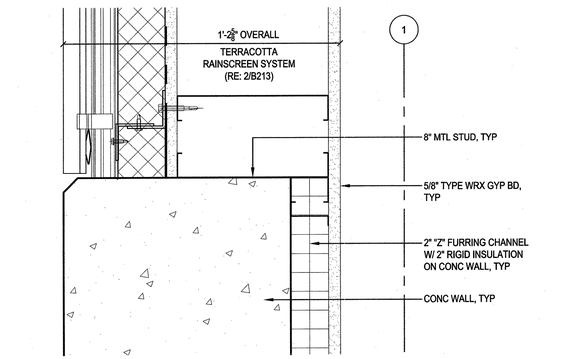

3 B213 TERRACOTTA RAINSCREEN @ CONC WALL

3"=1'-0"

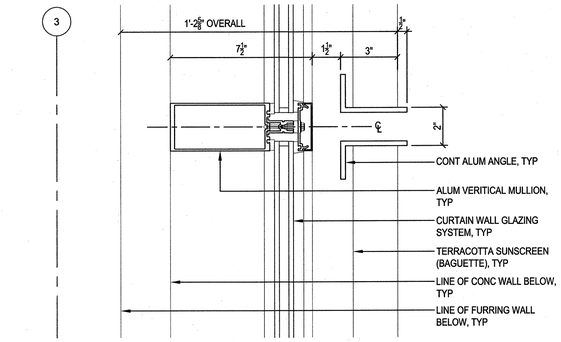

6 B213 CURTAIN WALL SYSTEM @ CONT ALUM ANGLE

3"=1'-0"

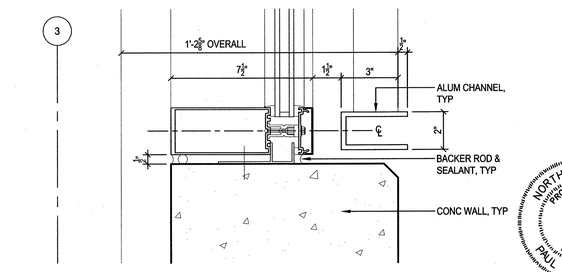

7 B213 CURTAIN WALL SYSTEM @ CONC WALL

3"=1'-0"

NORTH CAROLINA PROFESSIONAL ENGINEER SEAL 12916 PAUL J. BARBER 10/3/2016

PROJECT NO. B-2532

CRAVEN **COUNTY**

STATION: 31+21.29 -L-

STATE OF NORTH CAROLINA
DEPARTMENT OF TRANSPORTATION
RALEIGH, NC

NORTH PIER CONTROL HOUSE TERRACOTTA RAINSCREEN, SUNSCREEN & CURTAIN WALL – PLAN DETAILS

HNTB NORTH CAROLINA, P.C.
343 E. Six Forks Rd., Suite 200, Raleigh, N.C. 27609

DRAWN BY SSJ DATE 10/03/06
CHECKED BY RAP DATE 10/03/06
DWG. NO. **B213**

REVISIONS						SHEET NO.
NO.	BY	DATE	NO.	BY	DATE	S-231
1			3			TOTAL SHEETS
2			4			348

$$$$USERNAME$$$$
$$$$SYSTIME$$$$
$$$$DGN$$$$

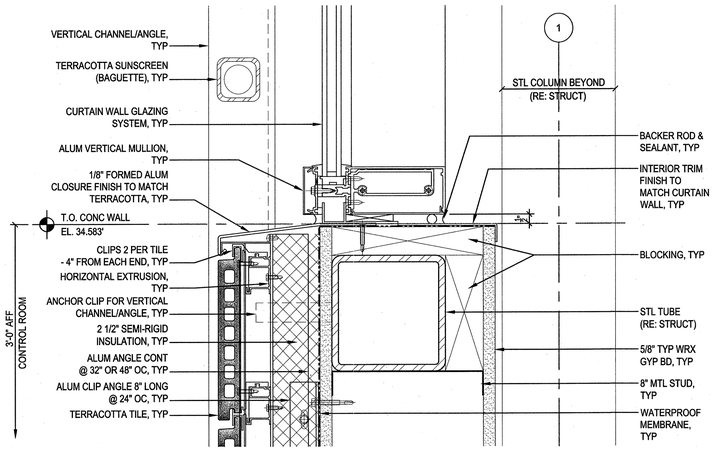

1 B214 TERRACOTTA RAINSCREEN @ CURTAIN WALL SYSTEM

3"=1'-0"

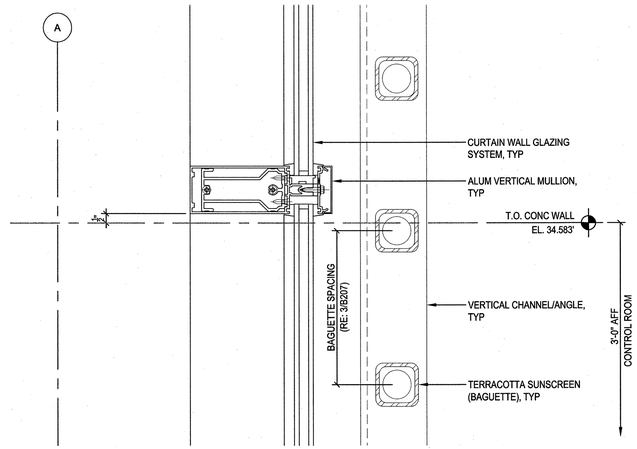

4 B214 CURTAIN WALL SYSTEM

3"=1'-0"

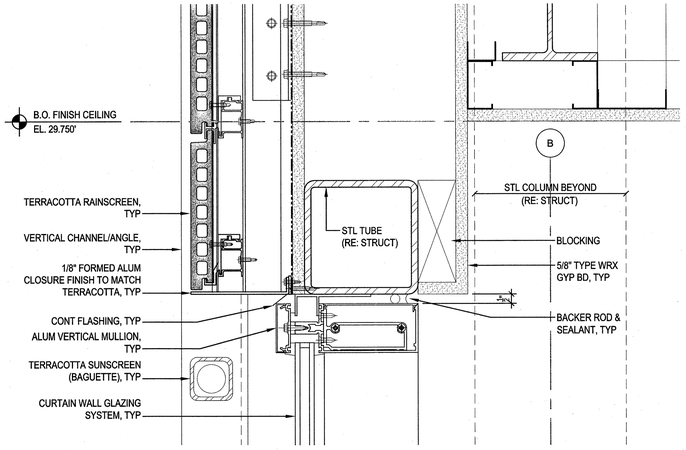

7 B214 TERRACOTTA RAINSCREEN @ CURTAIN WALL SYSTEM

3"=1'-0"

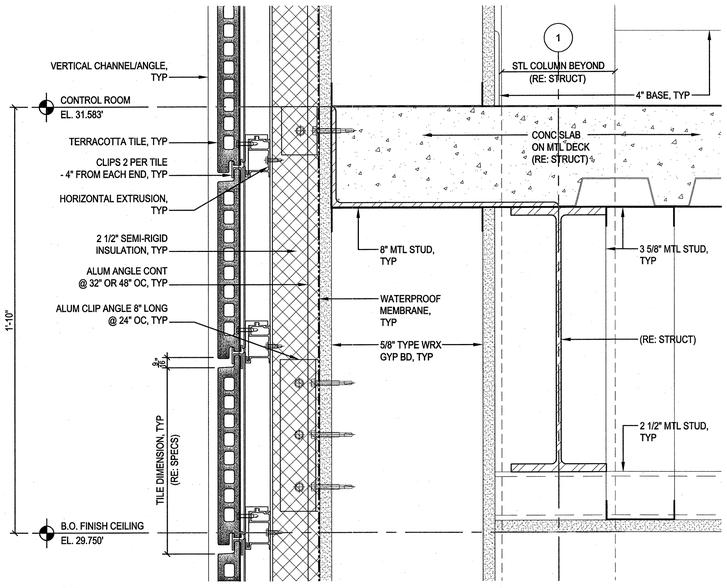

2 B214 TERRACOTTA RAINSCREEN @ CONC SLAB

3"=1'-0"

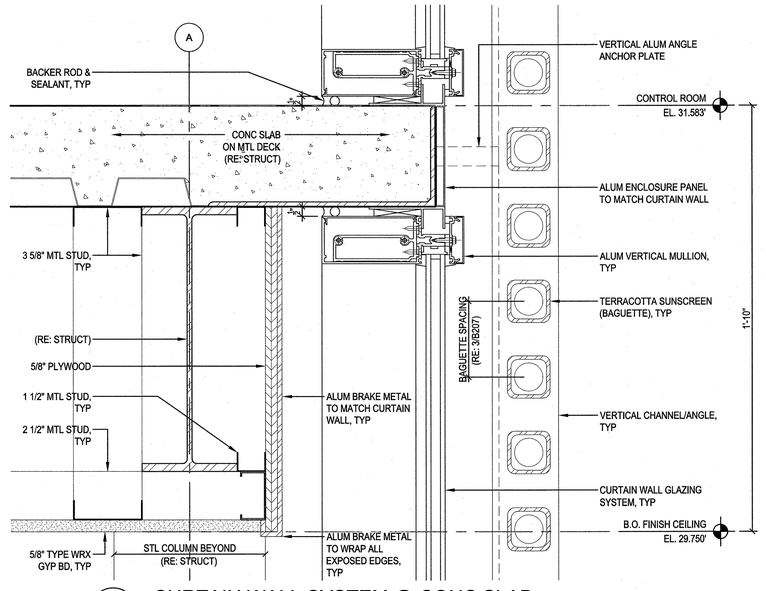

5 B214 CURTAIN WALL SYSTEM @ CONC SLAB

3"=1'-0"

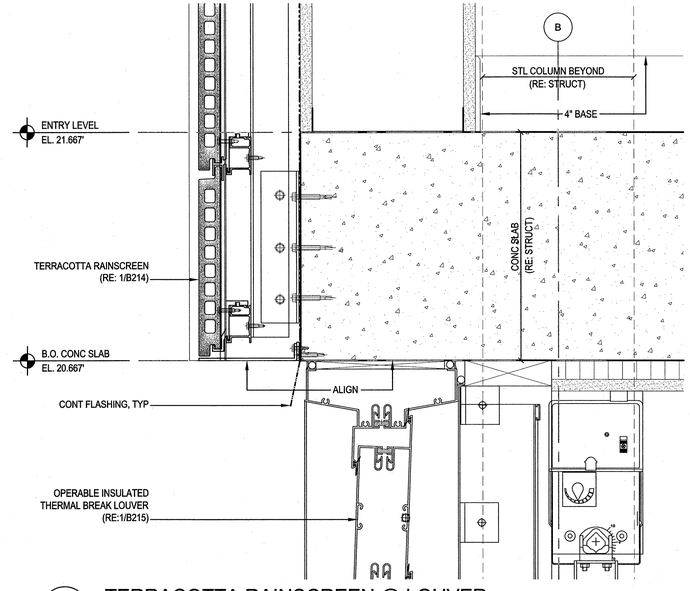

8 B214 TERRACOTTA RAINSCREEN @ LOUVER

3"=1'-0"

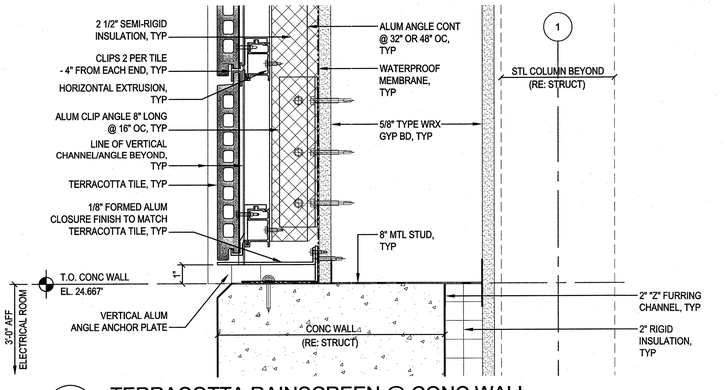

3 B214 TERRACOTTA RAINSCREEN @ CONC WALL

3"=1'-0"

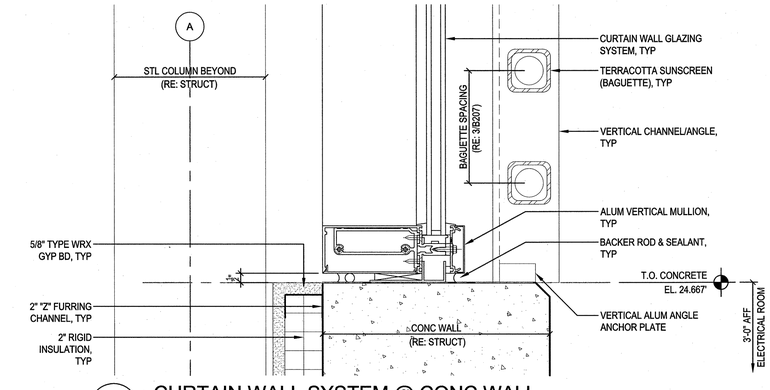

6 B214 CURTAIN WALL SYSTEM @ CONC WALL

3"=1'-0"

PROJECT NO. B-2532

CRAVEN **COUNTY**

STATION: 31+21.29 -L-

STATE OF NORTH CAROLINA
DEPARTMENT OF TRANSPORTATION
RALEIGH, NC

NORTH PIER CONTROL HOUSE TERRACOTTA RAINSCREEN, SUNSCREEN & CURTAIN WALL – SECTION DETAILS 1

NORTH CAROLINA PROFESSIONAL ENGINEER SEAL 12916 PAUL J. BARBER 10/3/06

HNTB HNTB NORTH CAROLINA, P.C.
343 E. Six Forks Rd., Suite 200, Raleigh, N.C. 27609

DRAWN BY SSJ DATE 10/03/06
CHECKED BY RAP DATE 10/03/06
DWG. NO. **B214**

REVISIONS						SHEET NO.
NO.	BY	DATE	NO.	BY	DATE	B-2532
1			3			TOTAL SHEETS
2			4			348

$$$$USERNAME$$$$
$$$$SYSTIME$$$$
$$$$DGN$$$$

1 B215 LOUVER HEAD/SILL DETAIL
3"=1'-0"

2 B215 CURTAIN WALL SYSTEM @ STL TUBE
3"=1'-0"

3 B215 TERRACOTTA RAINSCREEN ASSEMBLY, TYP
N.T.S.

PROJECT NO. B-2532

CRAVEN COUNTY

STATION: 31+21.29 -L-

NORTH CAROLINA PROFESSIONAL SEAL 12916 ENGINEER PAUL J. BARBER 10/3/06

STATE OF NORTH CAROLINA
DEPARTMENT OF TRANSPORTATION
RALEIGH, NC

NORTH PIER CONTROL HOUSE TERRACOTTA RAINSCREEN, SUNSCREEN & CURTAIN WALL - SECTION DETAILS 2

HNTB — HNTB NORTH CAROLINA, P.C. 343 E. Six Forks Rd., Suite 200, Raleigh, N.C. 27609

DRAWN BY SSJ DATE 10/03/06
CHECKED BY RAP DATE 10/03/06
DWG. NO. B215

REVISIONS					
NO.	BY	DATE	NO.	BY	DATE
1			3		
2			4		

SHEET NO. S-236
TOTAL SHEETS 348

$$$USERNAME$$$$
$$$$SYSTIME$$$$
$$$$$$$$$$$$DGN$$$$$$$$$$$$$$$$$$

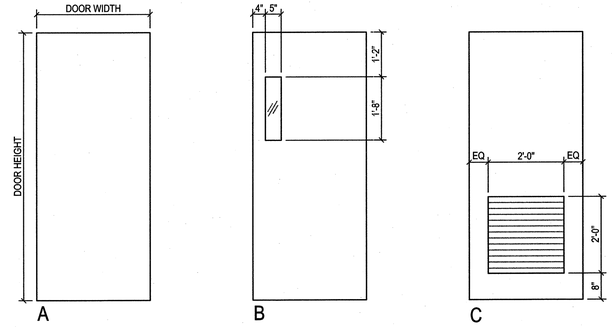

1 B216 **DOOR TYPES**
1/2"=1'-0"

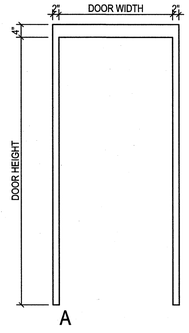

2 B216 **FRAME TYPE**
1/2"=1'-0"

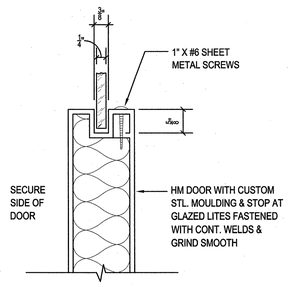

3 B216 **DOOR DETAIL**
6"=1'-0"

DOOR AND FRAME SCHEDULE - LOWER LEVEL

MARK	DOOR SIZE WIDTH	DOOR SIZE HEIGHT	DOOR SIZE THK	DOOR MATL	DOOR GLAZING	DOOR TYPE	FRAME MATL	FRAME TYPE		FRAME DETAIL HEAD	FRAME DETAIL JAMB	FRAME DETAIL THRES	HARDWARE SET NO	HARDWARE KEYSIDE RM. NO	NOTES
A101-1	3'-0"	7'-0"	1-3/4"	HM	-	C	HM	A		5/B216	9/B216	10/B216	2	STAIR	1 HR RATED
A101-2	3'-0"	7'-0"	1-3/4"	HM	-	A	HM	A		4/B216	8/B216	6/B216	1	EXTERIOR	1 HR RATED

DOOR AND FRAME SCHEDULE - ENTRY LEVEL

MARK	DOOR SIZE WIDTH	DOOR SIZE HEIGHT	DOOR SIZE THK	DOOR MATL	DOOR GLAZING	DOOR TYPE	FRAME MATL	FRAME TYPE		FRAME DETAIL HEAD	FRAME DETAIL JAMB	FRAME DETAIL THRES	HARDWARE SET NO	HARDWARE KEYSIDE RM. NO	NOTES
A201-1	3'-0"	7'-0"	1-3/4"	HM	-	C	HM	A		5/B216	9/B216	10/B216	2	A204	1 HR RATED
A202-1	3'-0"	7'-0"	1-3/4"	HM	-	C	HM	A		5/B216	9/B216	7/B216	2	A204	
A203-1	2'-10"	7'-0"	1-3/4"	HM	-	C	HM	A		5/B216	9/B216	7/B216	2	A204	
A204-1	3'-0"	7'-0"	1-3/4"	HM	-	-	HM	-		-	-	-	1	EXTERIOR	SEE SPECS
A204-2	2'-10"	7'-0"	1-3/4"	HM	3/B216	B	HM	A		5/B216	9/B216	10/B216	2	A204	1 HR RATED

NOTES:

1. SEE DRAWING A1 FOR ABBREVIATIONS, SYMBOLS LEGEND AND GENERAL NOTES.

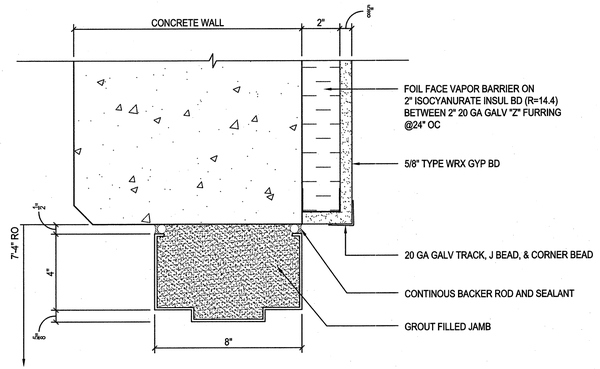

4 B216 **HEAD - CONCRETE**
3"=1'-0"

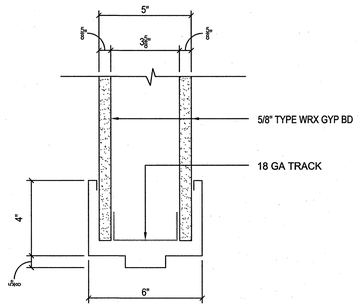

5 B216 **HEAD - GYPSUM**
3"=1'-0"

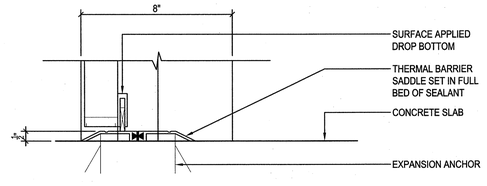

6 B216 **THRESHOLD**
3"=1'-0"

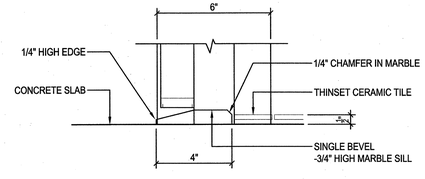

7 B216 **THRESHOLD**
3"=1'-0"

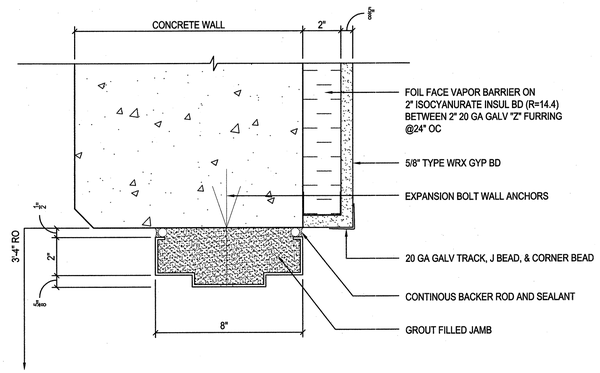

8 B216 **JAMB - CONCRETE**
3"=1'-0"

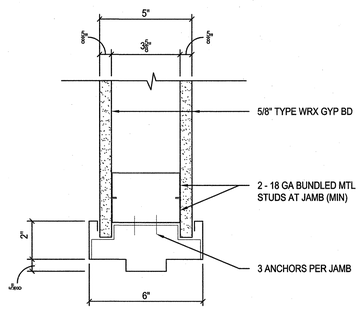

9 B216 **JAMB - GYPSUM**
3"=1'-0"

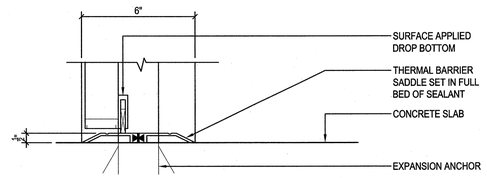

10 B216 **THRESHOLD**
3"=1'-0"

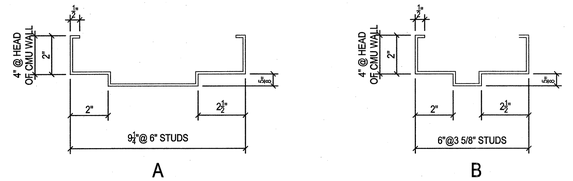

11 B216 **FRAME PROFILES**
NTS

PROJECT NO. B-2532
CRAVEN **COUNTY**
STATION: 31+21.29 -L-

STATE OF NORTH CAROLINA
DEPARTMENT OF TRANSPORTATION
RALEIGH, NC

DOOR SCHEDULES & DETAILS

NORTH CAROLINA PROFESSIONAL ENGINEER SEAL 12916 PAUL J. BARKER 10/3/06

HNTB HNTB NORTH CAROLINA, P.C.
343 E. Six Forks Rd., Suite 200, Raleigh, N.C. 27609

DRAWN BY SSJ DATE 10/03/06
CHECKED BY RAP DATE 10/03/06
DWG. NO. **B216**

REVISIONS NO.	BY	DATE	NO.	BY	DATE
1			3		
2			4		

SHEET NO. 5-277
TOTAL SHEETS 348

$$$$USERNAME$$$$
$$$$SYSTIME$$$$
$$$$DGN$$$$

PAINT SCHEDULE

MATERIAL	LOCATION	COLOR	PAINT SYSTEM SYMBOL	PAINT SYSTEM DESCRIPTION
GYPSUM BOARD	INTERIOR WALLS & PARTITIONS	WHITE	1	ACRYLIC - EPOXY SATIN FINISH 3 COAT SYSTEM. MDF = 3.3 MILS PER COAT.
	INTERIOR CEILINGS	WHITE	2	ACRYLIC - FLAT 3 COAT SYSTEM. MDF = 3.3 MILS PER COAT.
CONCRETE	INTERIOR FLOORS	GRAY	3	POLYAMIDE - EPOXY 2 COAT SYSTEM (NON SLIP) MDF = 2.0 MILS PER COAT. SEE NOTES 1 & 2.
	INTERIOR CEILINGS	WHITE	4	ACRYLIC-EPOXY SATIN FINISH 3 COAT SYSTEM. PRIMER COAT: MDF = 12.5 MILS. INTERMEDIATE & FINISH COATS: MDF = 3.3 MILS PER COAT.
FERROUS METAL	DOORS & DOOR FRAMES	GRAY	5	POLYMIDE - EPOXY SATIN FINISH 3 COAT SYSTEM. PRIMER COAT: MDF = 3.0 MILS. INTERMEDIATE & FINISH COATS: MDF = 2.0 MILS PER COAT.
	INTERIOR STAIR HANDRAILS GATES	GRAY	6	
	EXTERIOR GUARDRAIL	S.S.	7	

INTERIOR ROOM FINISH SCHEDULE - NORTH PIER CONTROL HOUSE

RM NO.	ROOM NAME	FLOOR	BASE	WALLS N	WALLS S	WALLS E	WALLS W	CEILING	CEILING HEIGHT	REMARKS
101	GENERATOR ROOM	3	RB	1	1	1	1	4	8' - 9"	-
	STAIRS	3*	RB	|	|	|	|	2, 4*	VARIES	*ON CONC.
201	ELECTRICAL ROOM	3	RB	|	|	|	|	4	8' - 0"	-
202	TOILET	CT	CT	CT	CT	CT	CT	ACT	8' - 0"	-
203	JANITOR	CT	RB	CT	CT	CT	CT	ACT	8' - 0"	
204	ENTRY	SC	RB	1	1	1	1	2	8' - 0"	
	STAIRS	3*	RB	|	|	|	|	2, 4*	VARIES	*ON CONC.
301	CONTROL ROOM	VCT	RB	1	1	1	1	ACT	9'-0"/9'-6"	-
	STAIRS	3*	RB	|	|	|	|	ACT	VARIES	*ON CONC.

INTERIOR ROOM FINISH SCHEDULE - SOUTH PIER MACHINERY ROOM

RM NO.	ROOM NAME	FLOOR	BASE	WALLS N	WALLS S	WALLS E	WALLS W	CEILING	CEILING HEIGHT	REMARKS
101	ELECTRICAL ROOM	3	RB	1	1	1	1	2	8' - 10"	

SYMBOL / DESCRIPTION

SYMBOL	DESCRIPTION
RT	RESILIENT TILE
CT	CERAMIC TILE
1,2, etc.	PAINT SYSTEM
RB	RESILENT BASE
ACT	ACOUSTICAL CLG TILE
SC	SEALED CONC

PARTITION TYPE KEY

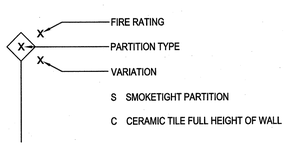

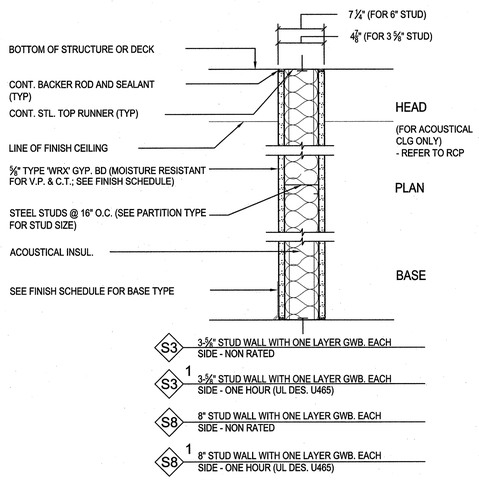

1 / B217 STEEL STUD WALL DETAIL (S)
1 1/2"=1'-0"

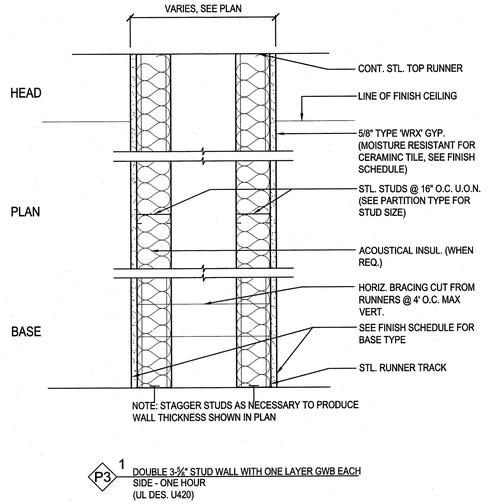

1 / P3 DOUBLE 3-⅝" STUD WALL WITH ONE LAYER GWB EACH SIDE - ONE HOUR (UL DES. U420)

2 / B217 PLUMBING CHASE WALL DETAIL (P)
1 1/2"=1'-0"

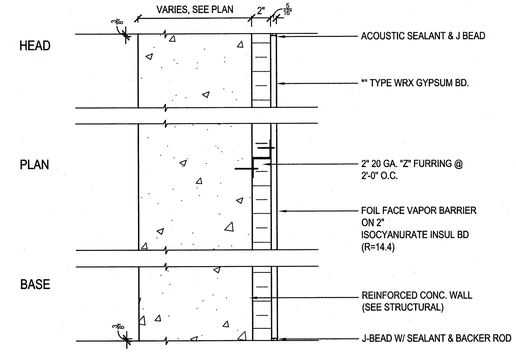

3 / B217 CONCRETE EXTERIOR WALL
1 1/2"=1'-0"

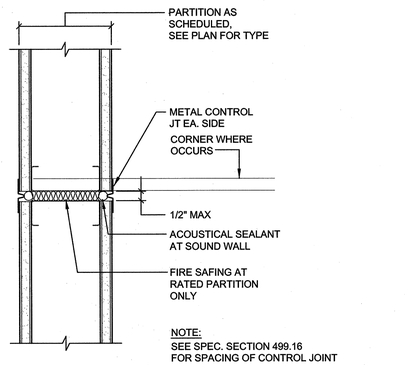

4 / B217 STEEL STUD WALL DETAIL (S)
3"=1'-0"

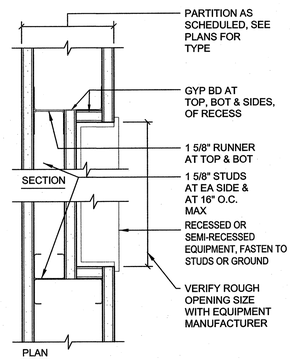

5 / B217 PLUMBING CHASE WALL DETAIL (P)
3"=1'-0"

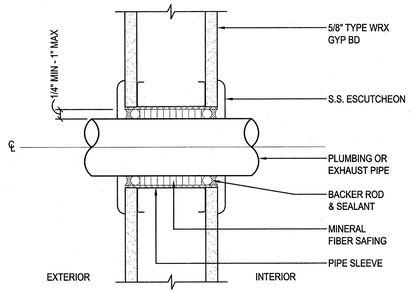

6 / B217 TYP PIPE PENETRATION DETAIL THRU GYP WALL
3"=1'-0"

PROJECT NO. B-2532

CRAVEN **COUNTY**

STATION: 31+21.29 -L-

STATE OF NORTH CAROLINA
DEPARTMENT OF TRANSPORTATION
RALEIGH, NC

FINISH SCHEDULE & PARTITION TYPES

NORTH CAROLINA PROFESSIONAL SEAL 12916 ENGINEER PAUL J. BARBER 10/03/06

HNTB NORTH CAROLINA, P.C.
343 E. Six Forks Rd., Suite 200, Raleigh, N.C. 27609

DRAWN BY SSJ DATE 10/03/06
CHECKED BY RAP DATE 10/03/06
DWG. NO. **B217**

REVISIONS NO.	BY	DATE	NO.	BY	DATE
1			3		
2			4		

SHEET NO. S-278
TOTAL SHEETS 348

$$$$USERNAME$$$$
$$$$STATUS$$$$
$$$$DGN$$$$

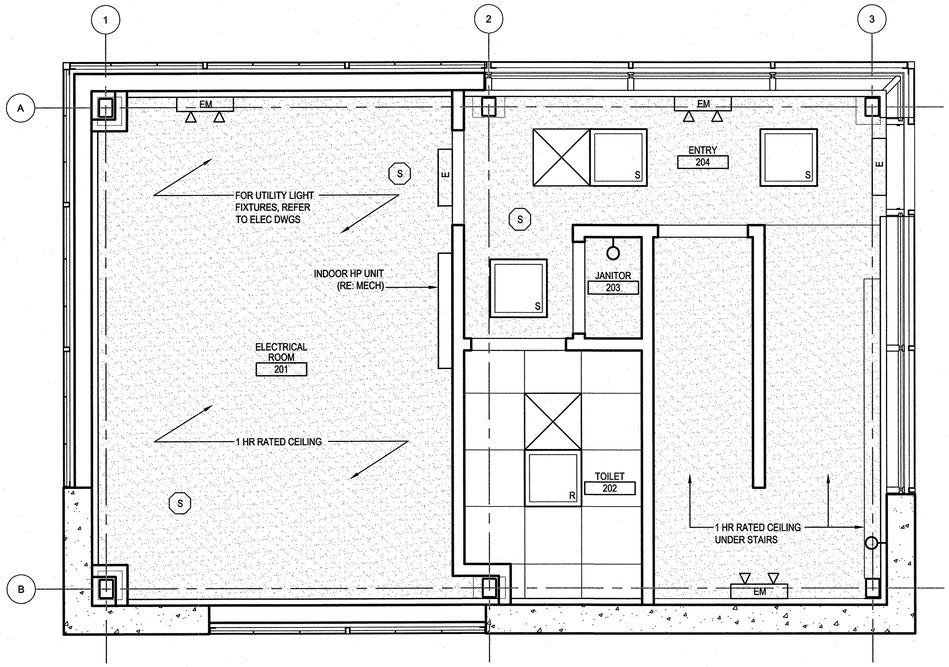

2 B218 ENTRY LEVEL RCP
3/8"=1'-0"

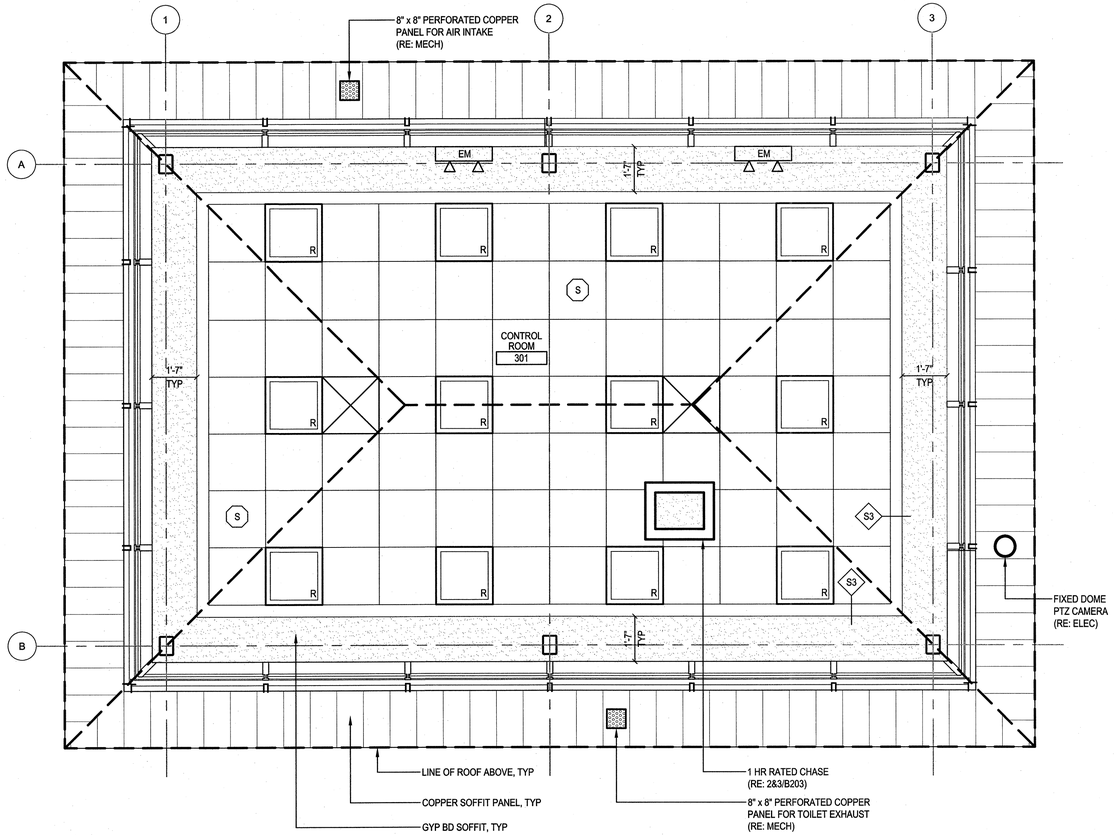

3 B218 CONTROL ROOM RCP
3/8"=1'-0"

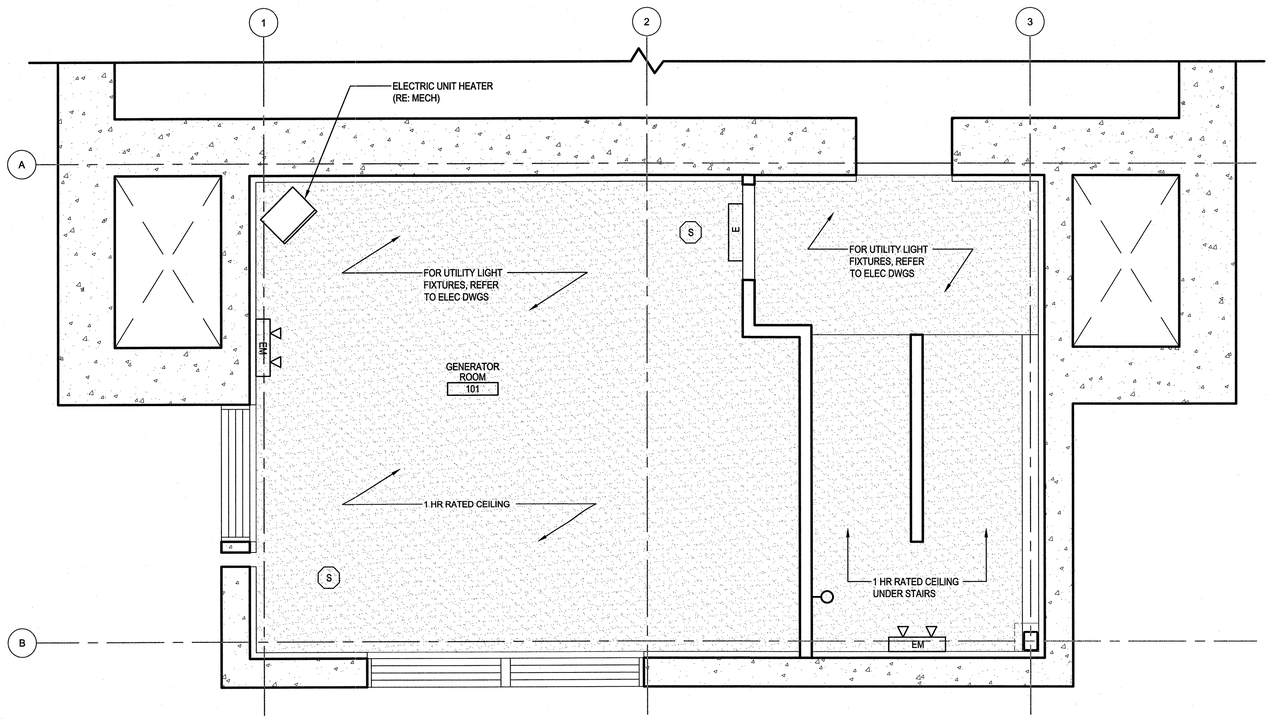

1 B218 GENERATOR ROOM RCP
3/8"=1'-0"

REFLECTED CEILING PLAN LEGEND

- GYP. BD. CEILING
- 2' X 2' ACOUSTICAL CEILING TILES
- 2' X 2' LIGHT FIXTURE - RECESSED
- 2' X 2' LIGHT FIXTURE - SURFACE MOUNTED
- EXIT SIGN W/ EMERGENCY BATTERY BACKUP
- EMERGENCY LIGHT W/ BATTERY BACKUP
- SMOKE DETECTOR
- INCANDESCENT LIGHT - WALL MOUNTED
- RETURN DIFFUSER
- SUPPLY DIFFUSER

NORTH CAROLINA PROFESSIONAL SEAL 12916 ENGINEER PAUL J. BARBER 11/3/16

PROJECT NO. B-2532

CRAVEN **COUNTY**

STATION: 31+21.29 -L-

STATE OF NORTH CAROLINA
DEPARTMENT OF TRANSPORTATION
RALEIGH, NC

NORTH PIER CONTROL HOUSE
GENERATOR RM,
ENTRY LEVEL
& CONTROL RM RCP

HNTB HNTB NORTH CAROLINA, P.C.
343 E. Six Forks Rd., Suite 200, Raleigh, N.C. 27609

DRAWN BY SSJ DATE 10/03/06
CHECKED BY RAP DATE 10/03/06
DWG. NO. **B218**

REVISIONS						SHEET NO.
NO.	BY	DATE	NO.	BY	DATE	S-259
1			3			TOTAL SHEETS
2			4			348

$$$$USERNAME$$$$
$$$$SYSTIME$$$$
$$$$SYSTIME$$$$DGN$$$$

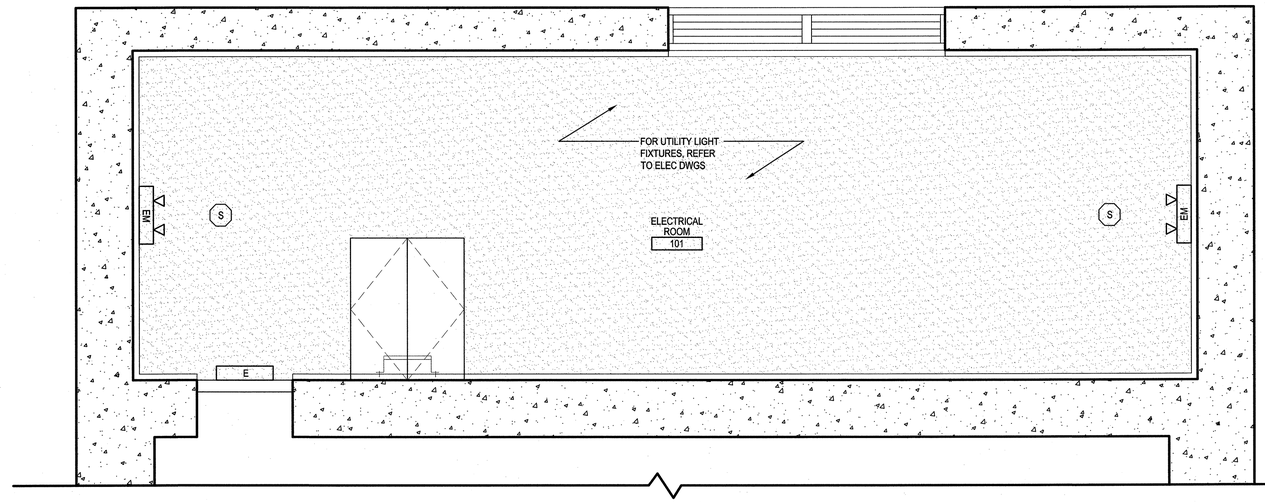

1 / B219 ELECTRICAL RM RCP

3/8"=1'-0"

N

REFLECTED CEILING PLAN LEGEND

- GYP. BD. CEILING
- 2' X 2' ACOUSTICAL CEILING TILES
- R — 2' X 2' LIGHT FIXTURE - RECESSED
- S — 2' X 2' LIGHT FIXTURE - SURFACE MOUNTED
- LE — EXIT SIGN W/ EMERGENCY BATTERY BACKUP
- EB — EMERGENCY LIGHT W/ BATTERY BACKUP
- S — SMOKE DETECTOR
- INCANDESCENT LIGHT - WALL MOUNTED
- RETURN DIFFUSER
- SUPPLY DIFFUSER

PROJECT NO. B-2532

CRAVEN COUNTY

STATION: 31+21.29 -L-

STATE OF NORTH CAROLINA
DEPARTMENT OF TRANSPORTATION
RALEIGH, NC

SOUTH PIER MACHINERY ROOM ELECTRICAL RM RCP

NORTH CAROLINA PROFESSIONAL SEAL 12916 ENGINEER PAUL J. BARBER 10/3/06

HNTB NORTH CAROLINA, P.C.
343 E. Six Forks Rd., Suite 200, Raleigh, N.C. 27609

DRAWN BY SSJ DATE 10/03/06
CHECKED BY RAP DATE 10/03/06

DWG. NO. B219

REVISIONS						SHEET NO.
NO.	BY	DATE	NO.	BY	DATE	S-3219
1			3			TOTAL SHEETS
2			4			318

$$$$USERNAME$$$$
$$$$DGN$$$$

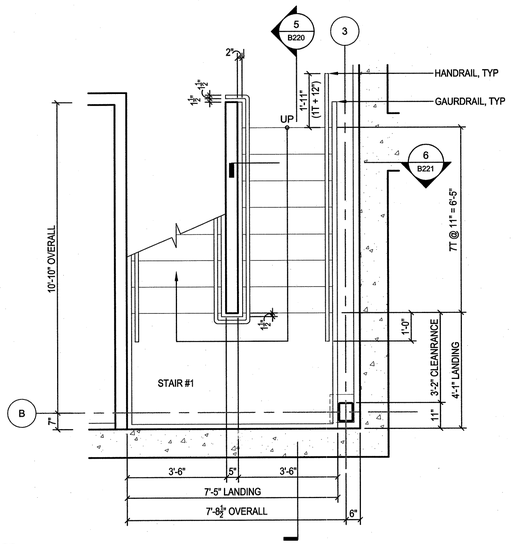

1 B220 **STAIR #1 @ GENERATOR ROOM**
3/8"=1'-0"

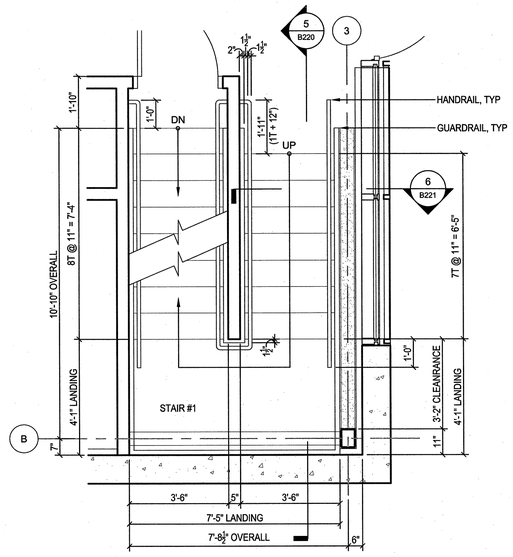

2 B220 **STAIR #1 @ ENTRY LEVEL**
3/8"=1'-0"

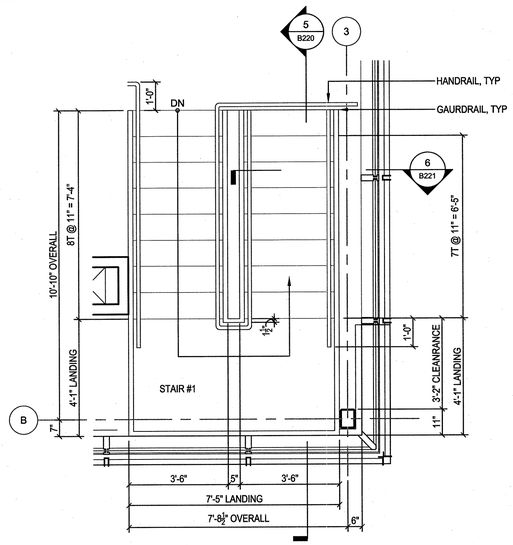

3 B220 **STAIR #1 @ CONTROL ROOM**
3/8"=1'-0"

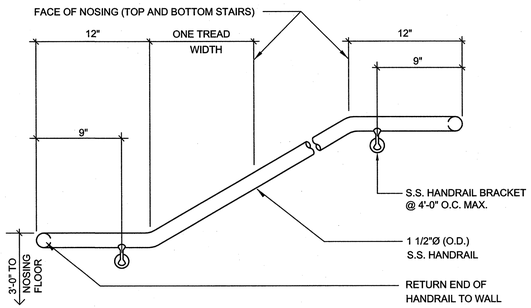

4 B220 **TYPICAL HANDRAIL ELEVATION**
NTS

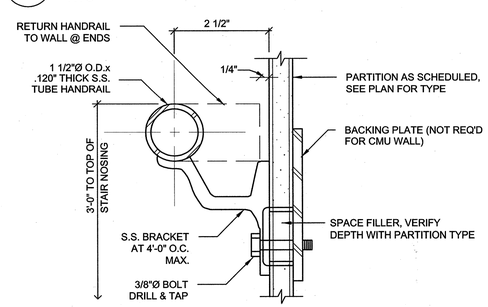

6 B220 **TYPICAL HANDRAIL SECTION**
NTS

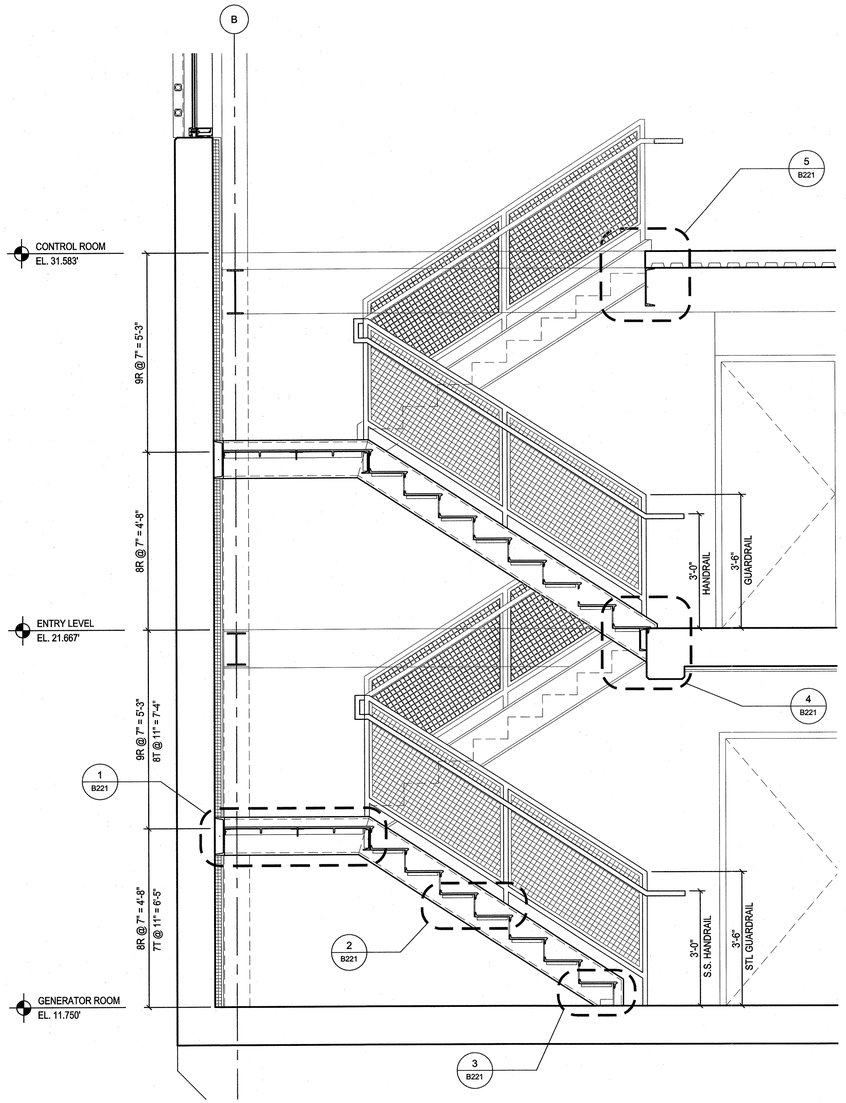

5 B220 **STAIR SECTION**
1/2"=1'-0"

PROJECT NO. B-2532
CRAVEN **COUNTY**
STATION: 31+21.29 -L-

STATE OF NORTH CAROLINA
DEPARTMENT OF TRANSPORTATION
RALEIGH, NC

NORTH PIER CONTROL HOUSE STAIR PLANS, SECTION & DETAILS

NORTH CAROLINA PROFESSIONAL ENGINEER SEAL 12916 PAUL J. BARBER 10/10/06

HNTB HNTB NORTH CAROLINA, P.C.
343 E. Six Forks Rd., Suite 200, Raleigh, N.C. 27609

DRAWN BY SSJ DATE 10/03/06
CHECKED BY RAP DATE 10/03/06
DWG. NO. **B220**

REVISIONS						SHEET NO.
NO.	BY	DATE	NO.	BY	DATE	S-241
1			3			TOTAL SHEETS
2			4			348

$$$$USERNAME$$$$
$$$$LOCATION$$$$
$$$$DGN$$$$

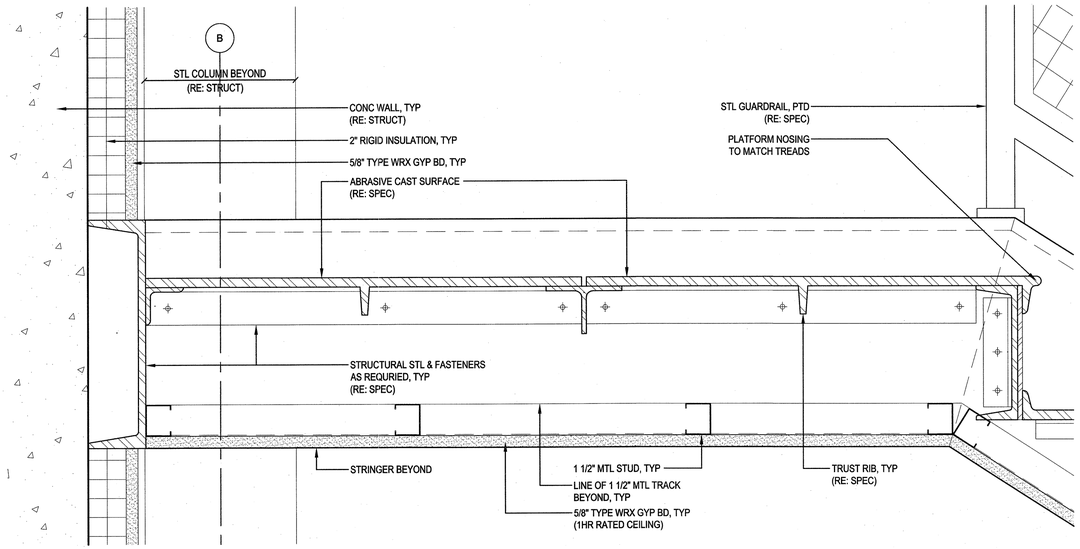

1 B221 **PLATFORM SECTION**

3"=1'-0"

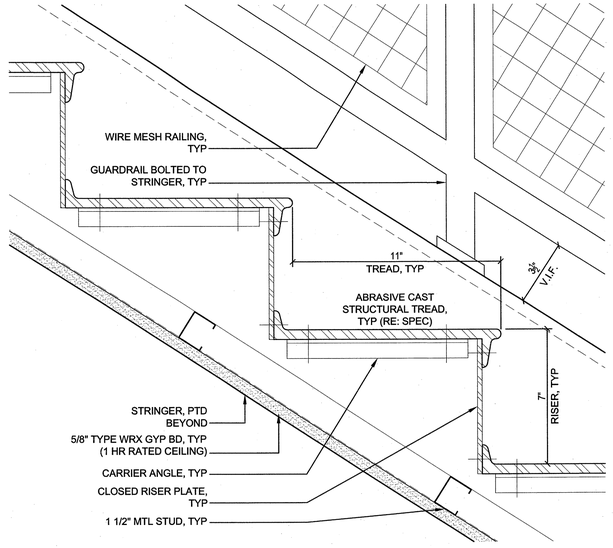

2 B221 **TYPICAL TREAD DETAIL**

3"=1'-0"

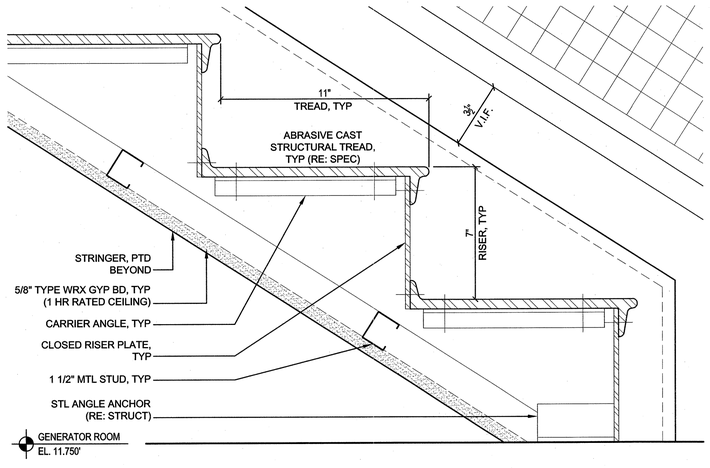

3 B221 **DETAIL @ GENERATOR ROOM**

3"=1'-0"

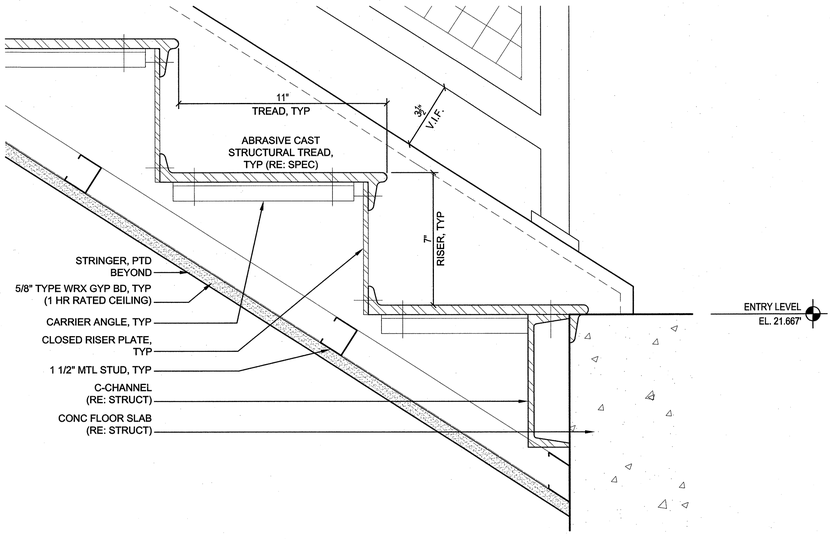

4 B221 **DETAIL @ ENTRY LEVEL**

3"=1'-0"

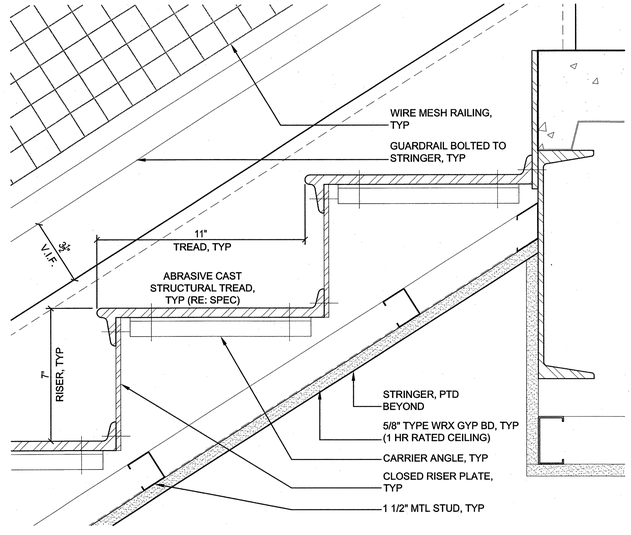

5 B221 **DETAIL @ CONTROL ROOM**

3"=1'-0"

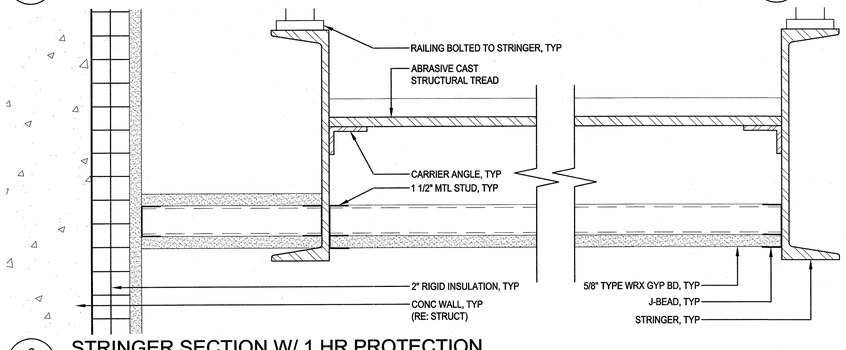

6 B221 **STRINGER SECTION W/ 1 HR PROTECTION**

3"=1'-0"

PROJECT NO. B-2532

CRAVEN **COUNTY**

STATION: 31+21.29 -L-

STATE OF NORTH CAROLINA
DEPARTMENT OF TRANSPORTATION
RALEIGH, NC

NORTH PIER CONTROL HOUSE STAIR DETAILS

NORTH CAROLINA PROFESSIONAL SEAL 12916 ENGINEER PAUL J. BARBER 11/9/16

HNTB HNTB NORTH CAROLINA, P.C.
343 E. Six Forks Rd., Suite 200, Raleigh, N.C. 27609

DRAWN BY SSJ DATE 10/03/06
CHECKED BY RAP DATE 10/03/06
DWG. NO. **B221**

REVISIONS						SHEET NO.
NO.	BY	DATE	NO.	BY	DATE	S-242
1			3			TOTAL SHEETS
2			4			248

$$$$USERNAME$$$$
$$$$SYSTIME$$$$
$$$$DGN$$$$

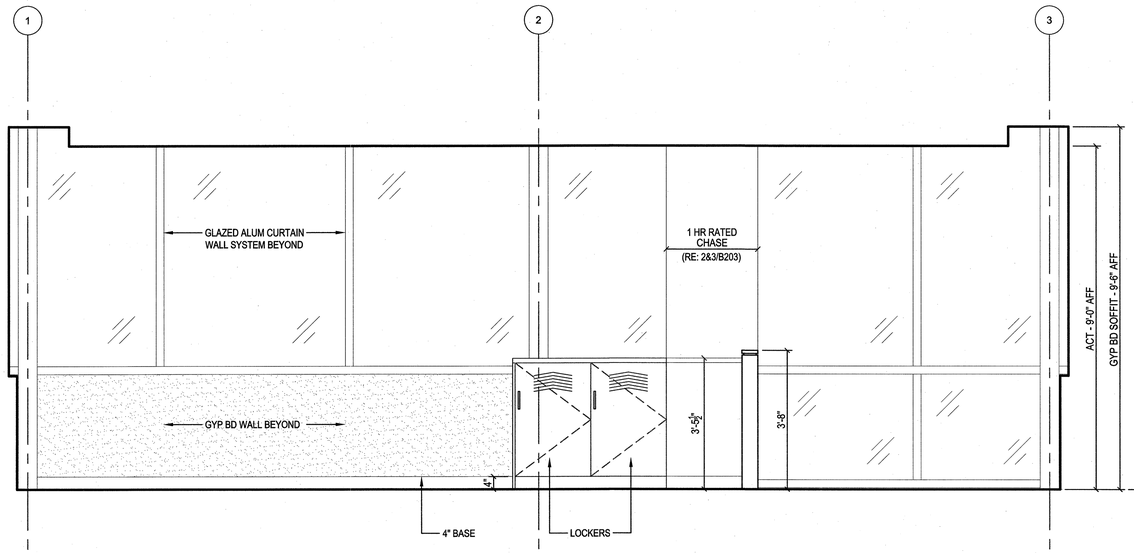

1 B222 CONTROL RM INTERIOR ELEVATION

1/2"=1'-0"

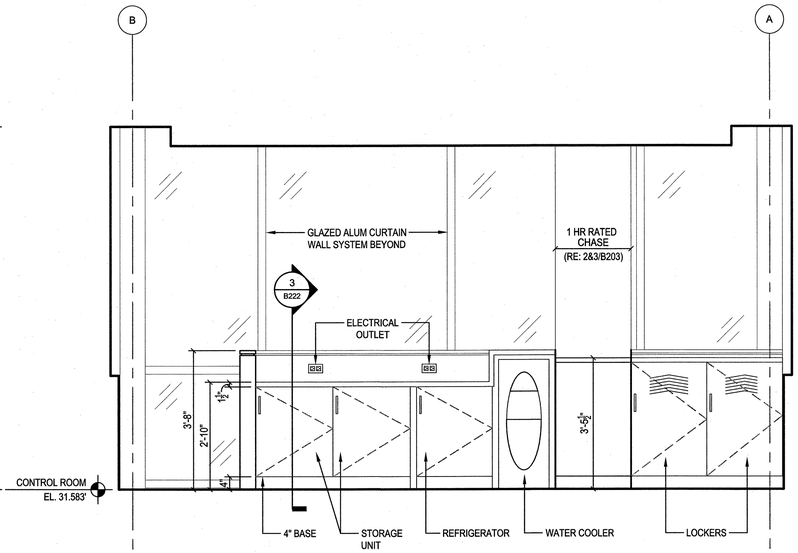

2 B222 CONTROL RM INTERIOR ELEVATION

1/2"=1'-0"

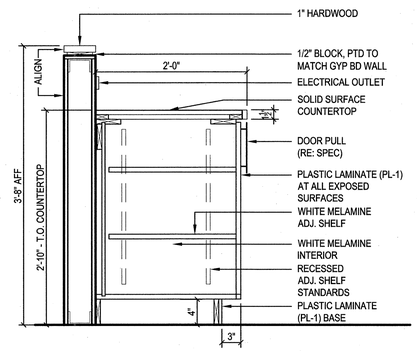

3 B222 STORAGE UNIT DETAIL

1"=1'-0"

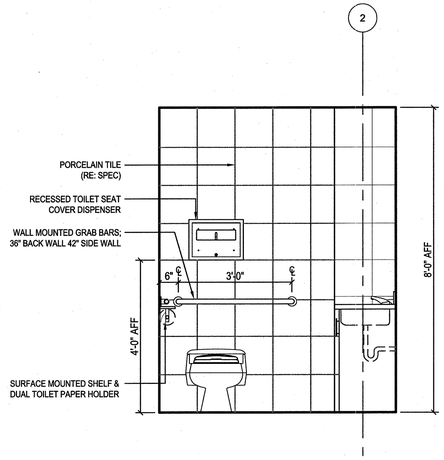

4 B222 TOILET RM INTERIOR ELEVATION

1/2"=1'-0"

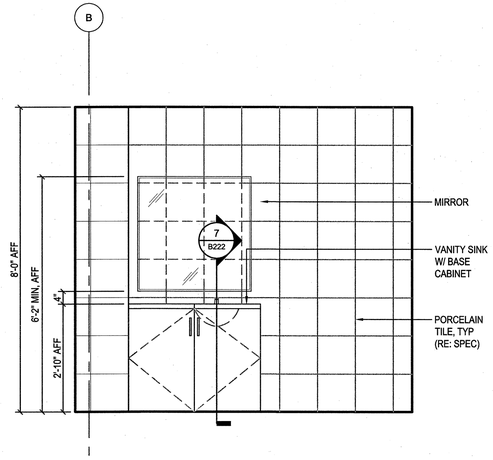

5 B222 TOILET RM INTERIOR ELEVATION

1/2"=1'-0"

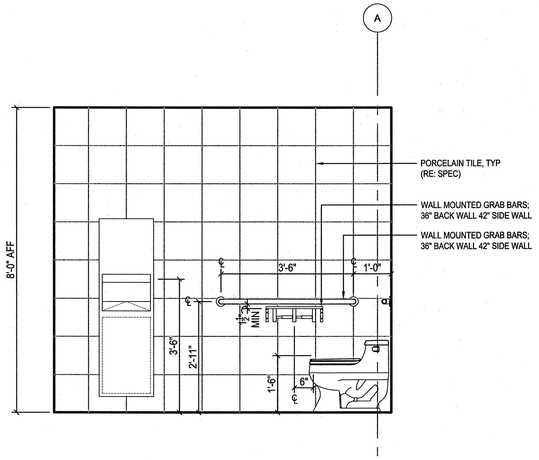

6 B222 TOILET RM INTERIOR ELEVATION

1/2"=1'-0"

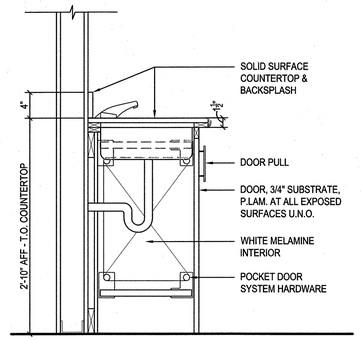

7 B222 TOILET RM - VANITY SECTION

1"=1'-0"

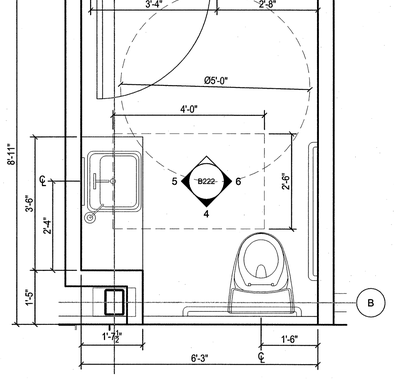

8 B222 TOILET RM

1/2"=1'-0"

PROJECT NO. B-2532

CRAVEN **COUNTY**

STATION: 31+21.29 -L-

STATE OF NORTH CAROLINA
DEPARTMENT OF TRANSPORTATION
RALEIGH, NC

NORTH PIER CONTROL HOUSE INTERIOR ELEAVTIONS, PLAN & DETAILS

NORTH CAROLINA PROFESSIONAL ENGINEER SEAL 12916 PAUL J. BARBER 10/03/06

HNTB HNTB NORTH CAROLINA, P.C.
343 E. Six Forks Rd., Suite 200, Raleigh, N.C. 27609

DRAWN BY SSJ DATE 10/03/06
CHECKED BY RAP DATE 10/03/06
DWG. NO. **B222**

REVISIONS						SHEET NO.
NO.	BY	DATE	NO.	BY	DATE	B-243
1			3			TOTAL SHEETS
2			4			348

$$$$USERNAME$$$$
$$$$SYSTYLE$$$$
$$$$DGN$$$$

INDEX OF DRAWINGS - MECHANICAL	
DWG. NO.	DESCRIPTION
M1	GENERAL NOTES AND INDEX OF DRAWINGS
M2	OPERATING MACHINERY LAYOUT
M3	OPERATING MACHINERY SCHEDULE
M4	OPERATING MACHINERY SECTIONS AND DETAILS
M5	RACK CONNECTION AND DETAILS
M6	RACK SEGMENT DETAILS
M7	TRUNNION SHAFT AND HUB ASSEMBLY
M8	TRUNNION BEARING HOUSING DETAILS
M9	TRUNNION BEARING BUSHING DETAILS
M10	OPERATING MACHINERY DETAILS
M11	OPERATING MACHINERY SUPPORT DETAILS
M12	SPAN LOCK MACHINERY
M13	SPAN LOCK MACHINERY DETAILS
M14	INSTRUMENT DRIVE MACHINERY
M15	CONTROL HOUSE HVAC AND PLUMBING
M16	SOUTH ELECTRICAL ROOM HVAC AND DETAILS
M17	CONTROL HOUSE PLUMBING SCHEMATIC AND DETAILS
M18	SUMP PUMP SYSTEM

GENERAL NOTES:

1. UNLESS OTHERWISE SHOWN OR NOTED ON THE DRAWINGS, THE DESIGN OF ALL MACHINERY SHALL CONFORM TO THE 1988 AASHTO STANDARD SPECIFICATION FOR MOVABLE HIGHWAY BRIDGES INCLUDING THE INTERIM SPECIFICATIONS, AS MODIFIED OR AMENDED BY THE CONTRACT SPECIFICATION.

2. ALL HUBS OF COUPLINGS, BRAKEWHEELS, PINIONS, AND OTHER SIMILAR COMPONENTS SHALL HAVE AN INTERFERENCE FIT WITH THEIR RESPECTIVE SHAFTS AND MUST BE PROPERLY KEYED THERETO WITH PARALLEL FACED KEYS EXCEPT AS NOTED IN THE DRAWINGS AND SPECIFICATIONS.

3. CONTRACTOR MAY SUBSTITUTE EQUIPMENT ONLY WITH APPROVAL FROM THE ENGINEER. THE CONTRACTOR IS SOLELY RESPONSIBLE TO SUBSTITUTE THE COMPONENT WITH A SIMILAR PRODUCT APPROVED BY THE ENGINEER.

4. THE MANUFACTURERS OF BEARINGS AND ALL OTHER EQUIPMENT REQUIRING LUBRICATION SHALL FURNISH AND INSTALL SUITABLE FITTINGS OR OTHER PROVISIONS NECESSARY TO PROPERLY LUBRICATE RUNNING PARTS. THESE FITTINGS OR PROVISIONS SHALL BE LOCATED AND POSITIONED FOR EASY ACCESSIBILITY. FITTINGS EXPOSED TO ELEMENTS SHALL BE SET IN 90 DEGREE PIPE ELBOWS. COUPLING SHALL BE PROVIDED WITH PIPE PLUGS SIZED TO ACCOMODATE STANDARD LUBRICATION FITTINGS.

5. ALL MACHINERY ITEMS WHICH REQUIRE FLUID REPLACEMENT AS ROUTINE MAINTAINANCE SHALL HAVE SUITABLE DRAIN VALVES AND DRAIN PLUGS, AND SHALL BE EQUIPPED TO PROVIDE AN EFFECTIVE METHOD OF DRAINING AND COLLECTING THE WASTE. THE CONTRACTOR SHALL SUBMIT DRAWINGS LOCATING DRAIN ASSEMBLIES AND PROPOSED WASTE COLLECTING DEVICES FOR APPROVAL.

6. MACHINERY SUPPORTS FOR ALL COMPONENTS SHALL BE FABRICATED AS SHOWN IN THE DRAWINGS. DRAWINGS OF ALL SUPPORT SHALL BE SUBMITTED FOR REVIEW AND CONTRACTOR SHALL VERIFY ALL DIMENSIONS PRIOR TO FABRICATION. DIMENSIONS SHALL BE THE SOLE RESPONSIBILITY OF THE CONTRACTOR.

7. ALL MACHINERY SUPPORTS SHALL BE WELDED USING 5/16" MINIMUM FILLET WELDS, UNLESS OTHERWISE SPECIFIED. SUPPORTS SHALL BE STRESS RELEIVED AFTER WELDING.

8. FULL SIZE SHIMS SHALL BE PROVIDED AS REQUIRED FOR ALL COMPONENTS AT THE MACHINERY SUPPORTS. THE SHIMS SHALL BE OF 1/2" NOMINAL THICKNESS OR AS OTHERWISE NECESSARY FOR OPTIMUM ALIGNMENT OF MACHINERY.

9. ALL MACHINERY SUPPORTS SHALL BE MILLED TO PROVIDE UNIFORM MOUNTING SURFACE. ALL DIMENSIONS SHOWN ON THE PLANS ARE TO BE THE MINIMUM ACCEPTABLE, AFTER MACHINING.

10. FOR DESIGN AND DETAIL REQUIREMENTS PERTAINING TO THE DRIVE MOTOR, AUXILIARY DRIVE MOTOR, MOTOR TACHOMETER, OVERSPEED AND CONTROL LIMIT SWITCHES, AND OTHER SIMILAR ITEMS, SEE ELECTRICAL DRAWINGS AND SPECIFICATIONS.

11. ALL ANCHOR BOLTS, WASHERS, AND NUTS, SET IN CONCRETE SHALL BE STAINLESS STEEL, UNLESS NOTED OTHERWISE. ANCHOR BOLT ADHESIVE SHALL CONFORM TO THE REQUIREMENTS OF THE STANDARD SPECIFICATION SECTION 1081 FOR TYPE 3A, UNLESS NOTED OTHERWISE.

NOTES:

1. FOR INDEX OF BASCULE SPAN "N" DRAWINGS, SEE DWG. NO. B100.

2. FOR INDEX OF CONTROL HOUSE DRAWINGS, SEE DWG. NO. B200.

3. FOR INDEX OF ELECTRICAL DRAWINGS, SEE DWG. NO. E1.

NORTH CAROLINA PROFESSIONAL SEAL 032371 ENGINEER STEVEN K. NG 10/20/06

PROJECT NO. B-2532

CRAVEN **COUNTY**

STATION: 31+21.29 -L-

STATE OF NORTH CAROLINA
DEPARTMENT OF TRANSPORTATION
RALEIGH, NC

GENERAL NOTES AND INDEX OF DRAWINGS

HNTB HNTB NORTH CAROLINA, P.C.
343 E. Six Forks Rd., Suite 200, Raleigh, N.C. 27609

DRAWN BY SK DATE 10/06
CHECKED BY SN DATE 10/06
DWG. NO. **M1**

REVISIONS						SHEET NO.
NO.	BY	DATE	NO.	BY	DATE	S-299
1			3			TOTAL SHEETS
2			4			348

sng AT W0010
16-OCT-2006 16:43
\\ccnt-ppfs-1\projects\B-2532_Alfred Cunningham\DGN\1002_Submission\Mechanical Files\B2532_M0_M1_GeneralNotes&Index.dgn

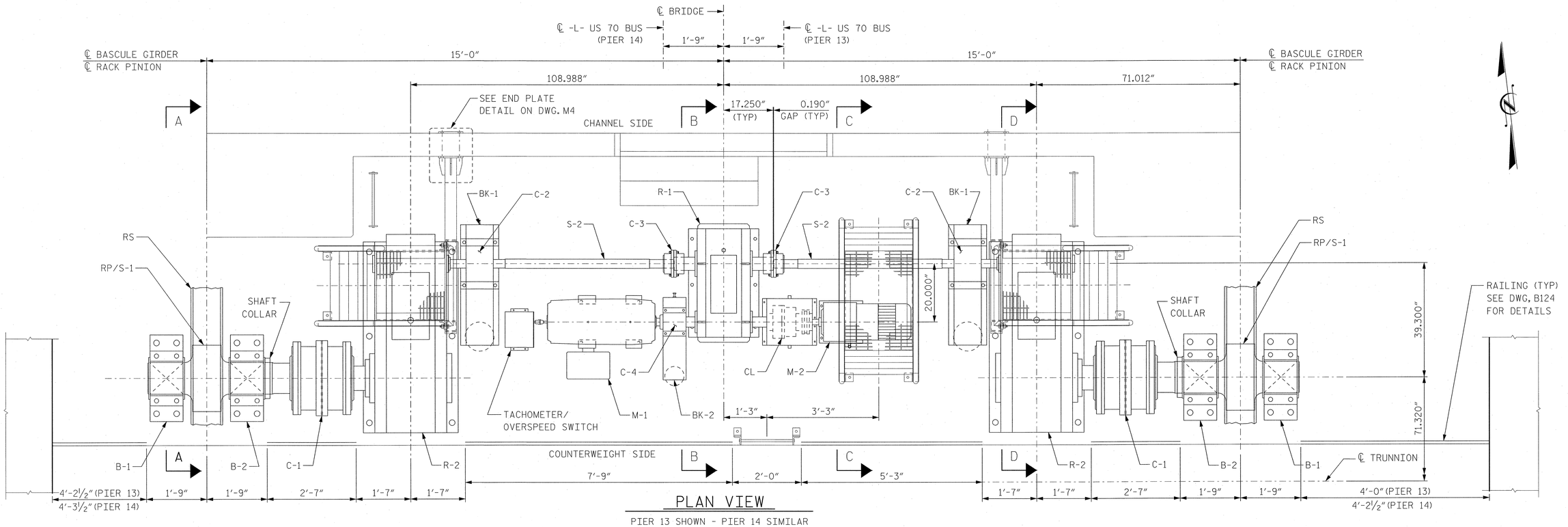

PLAN VIEW

PIER 13 SHOWN - PIER 14 SIMILAR

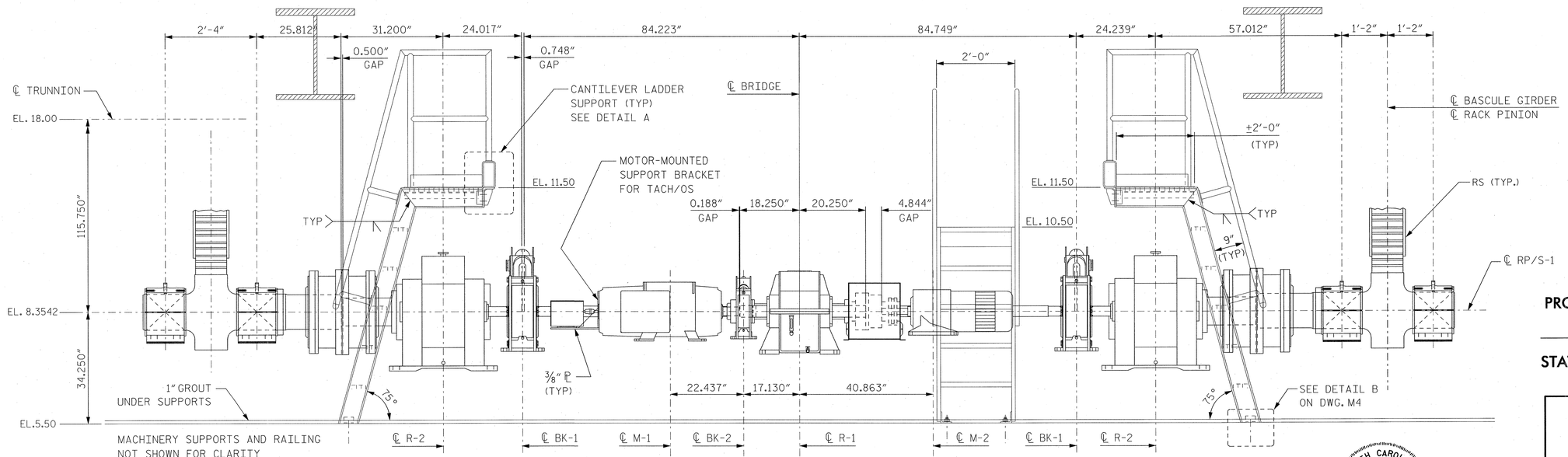

ELEVATION VIEW

NOTES:

1. FOR GENERAL MACHINERY NOTES, SEE DRAWING NO. M1.
2. FOR MACHINERY SCHEDULE, SEE DRAWING NO. M3.
3. FOR MACHINERY SUPPORT DETAILS, SEE DRAWING NO. M11.
4. ALL DIMENSIONS INCLUDING RAILING MAY VARY DEPENDING ON EQUIPMENT SELECTED. CONTRACTOR TO COORDINATE AND VERIFY DIMENSIONS.
5. FOR SECTIONS A-A, B-B, C-C, D-D, DETAIL A, AND END PLATE DETAIL, SEE DWG. NO. M4.

NORTH CAROLINA PROFESSIONAL SEAL 032371 ENGINEER STEVEN K. NG 10/24/06

PROJECT NO. B-2532

CRAVEN **COUNTY**

STATION: 31+21.29 -L-

STATE OF NORTH CAROLINA
DEPARTMENT OF TRANSPORTATION
RALEIGH, NC

OPERATING MACHINERY LAYOUT

HNTB HNTB NORTH CAROLINA, P.C.
343 E. Six Forks Rd., Suite 200, Raleigh, N.C. 27609

DRAWN BY SK DATE 10/06
CHECKED BY SN DATE 10/06

DWG. NO. **M2**

REVISIONS						SHEET NO.
NO.	BY	DATE	NO.	BY	DATE	S-245
1			3			TOTAL SHEETS
2			4			248

plot AT W:\00\10\06\2532\CAD\Struct\M2.dgn
10/24/2006 10:55:53 AM
J:\odot\42873 - Atl\ed Cunningham\OSW\1032\ Submittal\on\Mechanical Files\B2532_MD_M2_Machinery layout.dgn

OPERATING MACHINERY SCHEDULE

MK	DESCRIPTION	QTY	DESIGN REQUIREMENTS	SUITABLE EQUIPMENTS
RS	RACK SEGMENT	2	4¼" CIRCULAR PITCH, 9½" FACE, 20° INVOLUTE FULL DEPTH TEETH. SEE DWG. NO. M6 FOR DETAILS.	FORGED ALLOY STEEL, ASTM A668, CLASS G
RP/ S-1	RACK PINION SHAFT	2	INTEGRAL RACK PINION. 17 TEETH, 4¼" CIRCULAR PITCH, 10" FACE, 20 DEGREES INVOLUTE FULL DEPTH. SHAFT SHALL BE MACHINED CONCENTRIC FULL LENGTH. SEE DWG. NO. M10 FOR DETAILS.	FORGED ALLOY STEEL, ASTM A668, CLASS K
B-1	RACK PINION BEARING	2	TWO PIECE SPLIT HOUSING CONSTRUCTION A27 GRADE 70-36 CAST STEEL, OR A709 GRADE 36 WELDMENTS (STRESS RELIEVED). DOUBLE FLANGED, SPLIT TYPE BRONZE BUSHINGS (ASTM B22 ALLOY NO. 91100). ¼" THICK BRASS LINERS. FURNISH WITH DOUBLE SPIRAL GREASE GROOVES. AASHTO LOAD RATING OF MIN. 121,000 LBS.	STEWARD MACHINE COMPANY MODEL EPB-121 OR APPROVED EQUAL
B-2		2		
C-1	GEAR COUPLING	2	DOUBLE ENGAGEMENT GEAR COUPLING W/ GAP DISC. FLEXIBLE HUB W/ 8½" DIA. BORE AND 2- 2"x¾" KEYWAY TO SUIT R-2 OUTPUT. FLEXIBLE HUB 10½" DIA. BORE AND 2- 1¾"x¾" KEYWAY TO SUIT SHAFT S-1. MINIMUM TORQUE RATING OF 97,600 LB-FT. KEY MATERIAL SHALL BE ASTM A668, CLASS K.	FALK CORPORATION TYPE G20, SIZE 1090G AMERI GEAR LOVEJOY OR APPROVED EQUAL
R-2	SECONDARY REDUCER	1 LI RO 1 LO RI	TRIPLE REDUCTION, PARALLEL SHAFT REDUCER. SINGLE INPUT/OUTPUT. 50.07:1 RATIO W/ MINIMUM TORQUE CAPACITY OF 98,000 LB-FT WITH 1.0 SERVICE FACTOR. HIGH SPEED SHAFT TO BE EXTENDED ±4.00" TO SUIT BK-1/C-2.	FALK CORPORATION TRIPLE REDUCTION TYPE A, SIZE 485 STEWARD MACHINE COMPANY PRAGER FOOTE-JONES OR APPROVED EQUAL
C-2	MACHINERY BRAKE-WHEEL COUPLING	2	SINGLE ENGAGEMENT BRAKE-WHEEL COUPLING W/ STRAIGHT BORES AND GAP DISC. 16" DIA. x6¾" FACE. RIGID HUB 3.0" BORE, ¾"x⅜" KEYWAY TO SUIT R-2 INPUT SHAFT. FLEXIBLE HUB 3.0" BORE, ¾"x⅜" KEYWAY TO SUIT SHAFT S-2. MIN. COUPLING TORQUE RATING 2,180 LB-FT. KEY MATERIAL SHALL BE ASTM A668, CLASS D.	FALK CORPORATION TYPE G66, SIZE 1030G MONDEL/AMETEK OR APPROVED EQUAL
BK-1	MACHINERY BRAKE	2	3-PHASE AC HY-THRUST SHOE BRAKES W/ STRIP HEATER. 16" DIA. 6¾" FACE. 3 PIECE ENCLOSURE . BRAKE TORQUE SETTING OF 950 LB-FT. SEE ELECTRICAL SPECIFICATIONS FOR ADDITIONAL REQUIREMENTS. BK-1 AND C-2 SHALL BE COMPATIBLE.	MONDEL ENGINEERING MODEL 16"BT/E-ED80/6 FURNISHED BY ELECTRICAL AND INSTALLED BY MECHANICAL BURBENZER BREMSON GEMCO OR APPROVED EQUAL
S-2	FLOATING SHAFT	2	FORGED ALLOY STEEL SHAFT SHALL BE MACHINED CONCENTRIC FULL LENGTH. TURN TO SUITABLE DIAMETER/DIMENSION SHOWN ON DRAWING NO. M-10. PROVIDE GAP DISC AT COUPLINGS.	FORGED ALLOY STEEL, ASTM A668 - CLASS D
C-3	GEAR COUPLING	2	SINGLE ENGAGEMENT GEAR COUPLING W/ GAP DISC. RIGID HUB WITH 4⅝" DIA. BORE AND 1¼"x⅝" KEYWAY TO SUIT R-1 OUTPUT. FLEXIBLE HUB WITH 3.0" DIA. BORE AND ¾"x⅜" KEYWAY TO SUIT SHAFT S-2. MINIMUM TORQUE RATING OF 2,180 LB-FT. KEY MATERIAL SHALL BE ASTM A668, CLASS D.	FALK CORPORATION TYPE G51, SIZE 1030G AMERIGEAR LOVEJOY OR APPROVED EQUAL
R-1	PRIMARY REDUCER	1	SINGLE REDUCTION, DIFFERENTIAL, PARALLEL SHAFT REDUCER. DUAL INPUT/OUTPUT. 8.23:1 RATIO W/ MINIMUM TORQUE CAPACITY OF 4,000 LB-FT. CENTER DISTANCE BETWEEN SHAFTS TO BE 20.00". HIGH SPEED SHAFTS TO BE EXTENDED ±3.00" AND ±1.00" TO SUIT CL AND BK-2/C-4 RESPECTIVELY.	STEWARD MACHINE COMPANY TYPE SD, SIZE 6 PRAGER HORSBURGH & SCOTT OR APPROVED EQUAL

OPERATING MACHINERY SCHEDULE

MK	DESCRIPTION	QTY	DESIGN REQUIREMENTS	SUITABLE EQUIPMENTS
BK-2	MOTOR BRAKE	1	3-PHASE AC HY-THRUST SHOE BRAKES W/ STRIP HEATER. 10" DIA. 3¾" FACE. 3-PIECE ENCLOSURE. BRAKE TORQUE SETTING OF 170 LB-FT. SEE ELECTRICAL SPECIFICATION FOR ADDITIONAL REQUIREMENTS. BK-2 AND C-4 SHALL BE COMPATIBLE.	MONDEL ENGINEERING MODEL 10"BT/E - ED23/5 FURNISHED BY ELECTRICAL AND INSTALLED BY MECHANICAL BURBENZER BREMSEN GEMCO OR APPROVED WQUAL
C-4	MOTOR BRAKE-WHEEL COUPLING	1	STEELFLEX BRAKE-WHEEL COUPLING W/ STRAIGHT BORES.10" DIA. x 5¼" FACE. RIGID HUB WITH 3½" BORE, ⅞"x 1/16" KEYWAY TO SUIT R-1 INPUT SHAFT. FLEXIBLE HUB WITH 2⅝" BORE, ⅝"x 5/16" MIN KEYWAY TO SUIT M-1 OUTPUT SHAFT. MINIMUM COUPLING RATING OF 465 LB-FT. KEY MATERIAL SHALL BE ASTM A668, CLASS D.	FALK CORPORATION SIZE 11BW (10.00 x 5.25) MONDEL/AMETEK BUBENZER BREMSEN GEMCO OR APPROVED EQUAL
M-1	MAIN MOTOR	1	FOOT MOUNTED, 50 HP, 850 RPM BASE SPEED, TENV, DC MOTOR, W/ CONTINUOUS DUTY, MARINE ENVIRONMENT COATING. RATED FOR USE WITH VARIABLE SPEED DRIVE. SEE ELECTRICAL SPECIFICATIONS FOR ADDITIONAL REQUIREMENTS.	FURNISHED BY ELECTRICAL AND INSTALLED BY MECHANICAL
CL	CLUTCH	1	ELECTRICALLY ENGAGED CLUTCH WITH STRAIGHT BORES. MINIMUM STATIC TORQUE RATING OF 850 LB-FT. UNIT SHALL BE DYNAMICALLY BALANCED. FURNISH COMPLETE WITH RECTIFIER REQUIRED TO OPERATE THE UNIT. SPLIT TYPE ENCLOSURE, AND STRIP HEATER. KEY MATERIAL SHALL BE ASTM A668, CLASS D.	REXNORD-STEARNS STYLE E, CLASS S, SIZE 1206 WARNER OR APPROVED EQUAL FURNISHED BY ELECTRICAL AND INSTALLED BY MECHANICAL
M-2	AUXILIARY GEARMOTOR	1	IN-LINE REDUCER, 5.169:1 EXACT RATIO. RATING OF 542 LB-FT, 350 RPM OUTPUT. OUTPUT SHAFT TO BE EXTENDED 4.2" TO SUIT CL DRIVE HUB. MOTOR SHALL BE TWO SPEED - TWO WINDING, 20/6.67 HP @ 1800/600 RPM RESPECTIVELY. MINIMUM AGMA CLASS II RATING WITH MARINE ENVIRONMENT COATING, STRIP HEATER, AND DISC BRAKE SETTING OF 50 LB-FT. SEE ELECTRICAL SPECIFICATIONS FOR ADDITIONAL REQUIREMENTS.	NUTTAL GEAR CORPORATION MODULINE - TYPE G FURNISHED BY ELECTRICAL AND INSTALLED BY MECHANICAL FOOTE-JONES FALK CORP./REXNORD OR APPROVED EQUAL

NOTES:

1. ALL QUANTITIES SHOWN ARE FOR ONE LEAF, TWO LEAVES REQUIRED.
2. FOR GENERAL MACHINERY NOTES, SEE DRAWING NO. M1.
3. FOR OPERATING MACHINERY LAYOUT, SEE DRAWING NO. M2.
4. SUITABLE EQUIPMENT MANUFACTURER IS PROVIDED FOR BIDDING PURPOSES ONLY. ACTUAL MANUFACTURER VARY DEPENDING ON EQUIPMENT SELECTED. CONTRACTOR TO COORDINATE AND VERIFY EQUIPMENT FOR COMPATIBILITY.

NORTH CAROLINA PROFESSIONAL ENGINEER SEAL 032371 STEVEN K. NG 10/06/06

PROJECT NO. B-2532

CRAVEN COUNTY

STATION: 31+21.29 -L-

STATE OF NORTH CAROLINA
DEPARTMENT OF TRANSPORTATION
RALEIGH, NC

OPERATING MACHINERY SCHEDULE

HNTB NORTH CAROLINA, P.C.
343 E. Six Forks Rd., Suite 200, Raleigh, N.C. 27609

DRAWN BY SK DATE 10/06
CHECKED BY SN DATE 10/06

DWG. NO. M3

REVISIONS						SHEET NO.
NO.	BY	DATE	NO.	BY	DATE	S-246
1			3			TOTAL SHEETS
2			4			348

dng AF NYDOT10
plotDate=10/6/06
dgnCell=M2BT3 "M1" ref CunninghamJOBN 100% SubmitSelonMechanical FinalN2532_M0_M3_MachSchedule.dgn

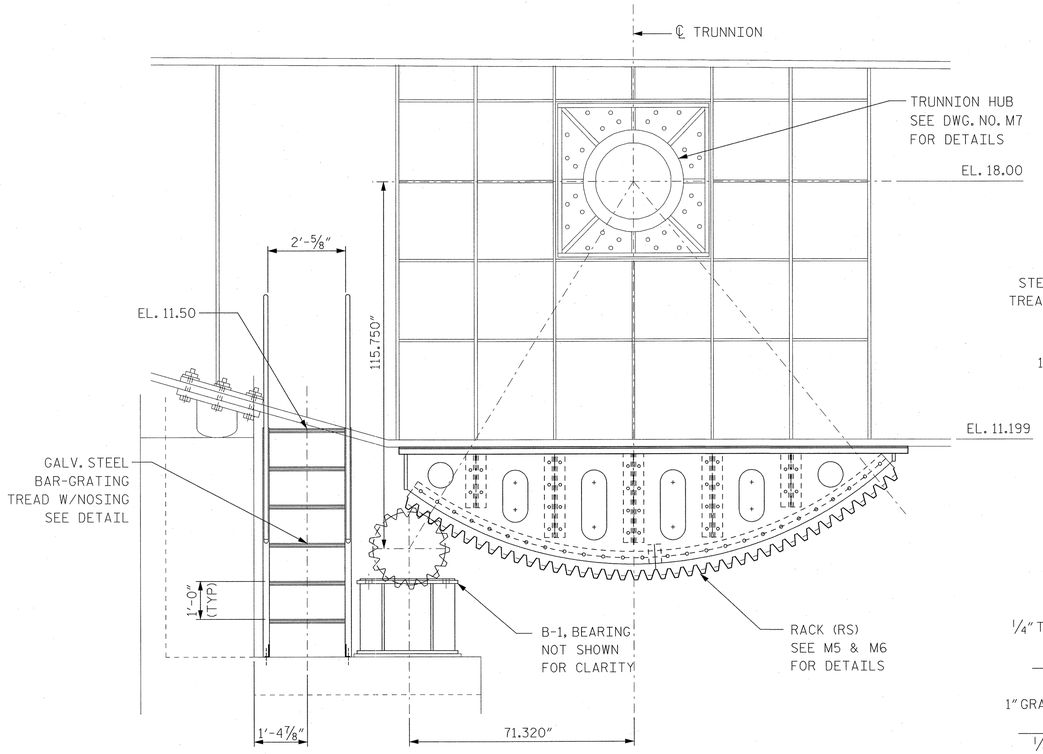

SECTION A-A

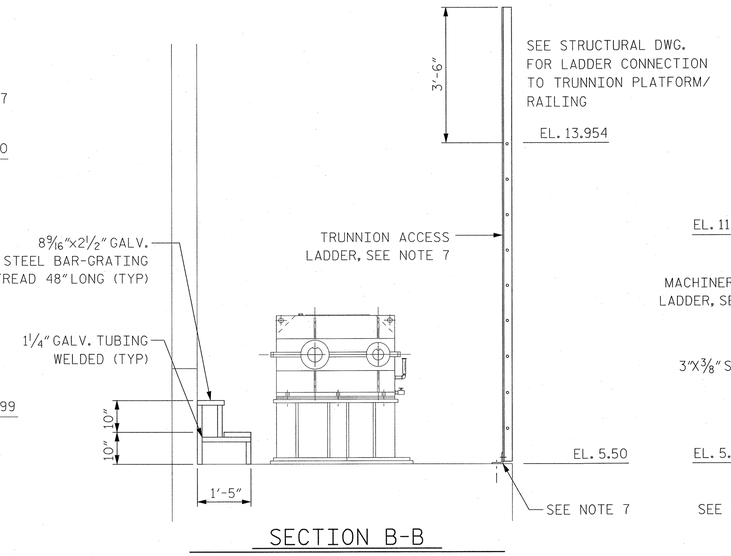

SECTION B-B

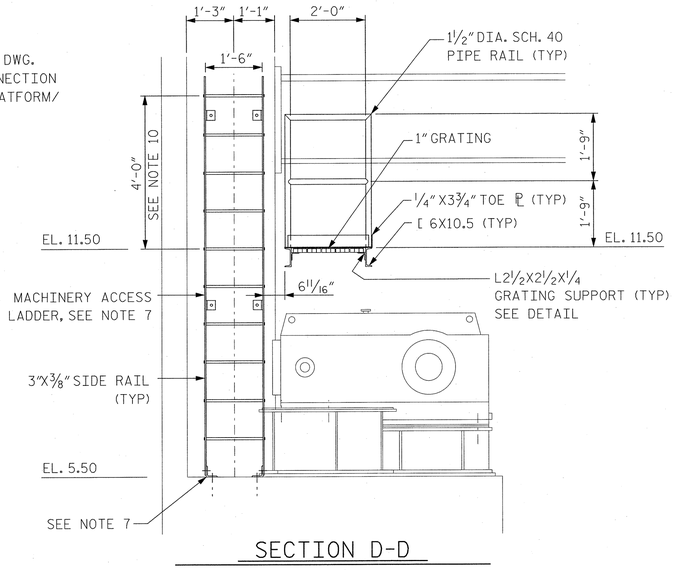

SECTION D-D

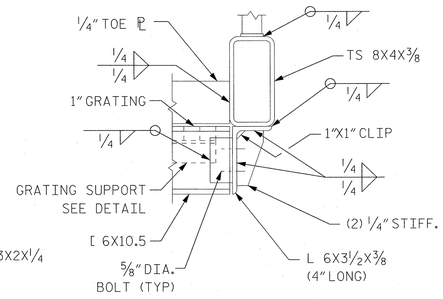

DETAIL A

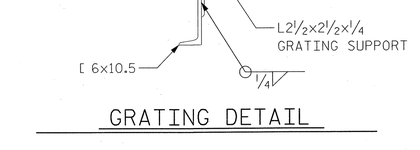

GRATING DETAIL

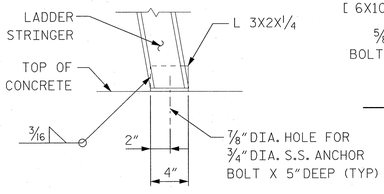

DETAIL B

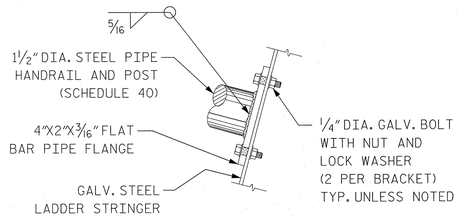

POST DETAIL

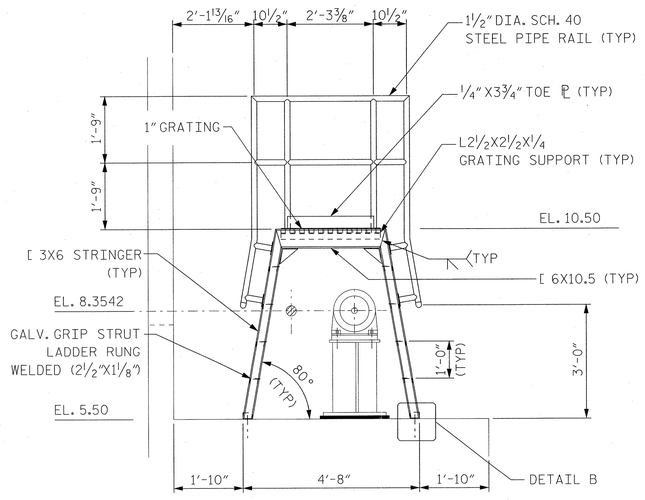

SECTION C-C

(CROSSOVER LADDER)

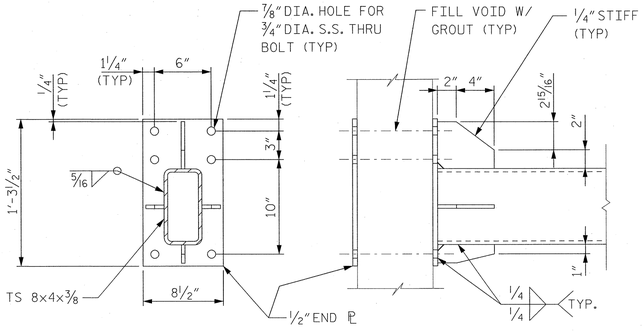

END PLATE DETAIL

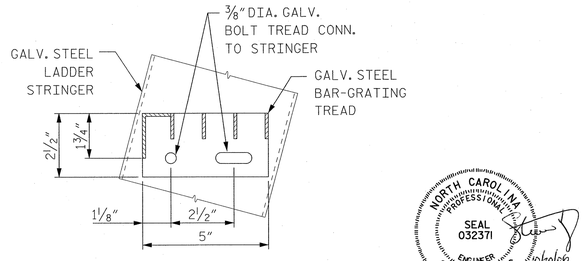

TREAD DETAIL

NOTES:

1. FOR GENERAL MACHINERY NOTES, SEE DWG. NO. M1.
2. FOR MACHINERY SCHEDULE, SEE DWG. NO. M3.
3. FOR MACHINERY SUPPORT DETAILS, SEE DWG. NO. M11.
4. FOR LOCATION OF SECTIONS A-A, B-B, C-C, D-D, DETAIL A, AND END PLATE DETAIL, SEE DWG. NO. M2.
5. DIMENSIONS MAY VARY DEPENDING ON EQUIPMENT SELECTED. CONTRACTOR TO COORDINATE AND VERIFY DIMENSIONS.
6. FOR GENERAL PLATFORM NOTES, SEE DWG. B136.
7. FOR TYPICAL LADDER DETAILS, SEE DWG. B137.
8. PLATFORM GRATING SHALL BE WELDED STEEL GRID GRATING TYPE W/B WITH 1"x¼" BEARING BAR SIZE AT 1 3/16" CENTERS WITH CROSS BARS AT 4" CENTERS.
9. ALL LADDERS, ACCESS PLATFORMS, AND RAILING SHALL BE INCLUDED UNDER PAY ITEM "PIER ACCESS WAYS."
10. SIDE RAILS AND RUNGS SHALL BE CARRIED TO THE NEXT REGULAR RUNG BEYOND OR ABOVE THE 42" MINIMUM.

PROJECT NO. B-2532

CRAVEN **COUNTY**

STATION: 31+21.29 -L-

NORTH CAROLINA PROFESSIONAL ENGINEER SEAL 032371 STEVEN K. NG 10/20/06

STATE OF NORTH CAROLINA
DEPARTMENT OF TRANSPORTATION
RALEIGH, NC

OPERATING MACHINERY SECTIONS AND DETAILS

HNTB NORTH CAROLINA, P.C.
343 E. Six Forks Rd., Suite 200, Raleigh, N.C. 27609

DRAWN BY SK DATE 10/06
CHECKED BY SN DATE 10/06

DWG. NO. **M4**

REVISIONS						SHEET NO.
NO.	BY	DATE	NO.	BY	DATE	S-247
1			3			TOTAL SHEETS
2			4			348

plotting AT_WOOD10
plotted 10/20/2006
J:\Locals\4267.3 - Airfield Cunningham\DGN\1002_Submission\Mechanical Final\B2532_MD_M4_MachinerySections.dgn

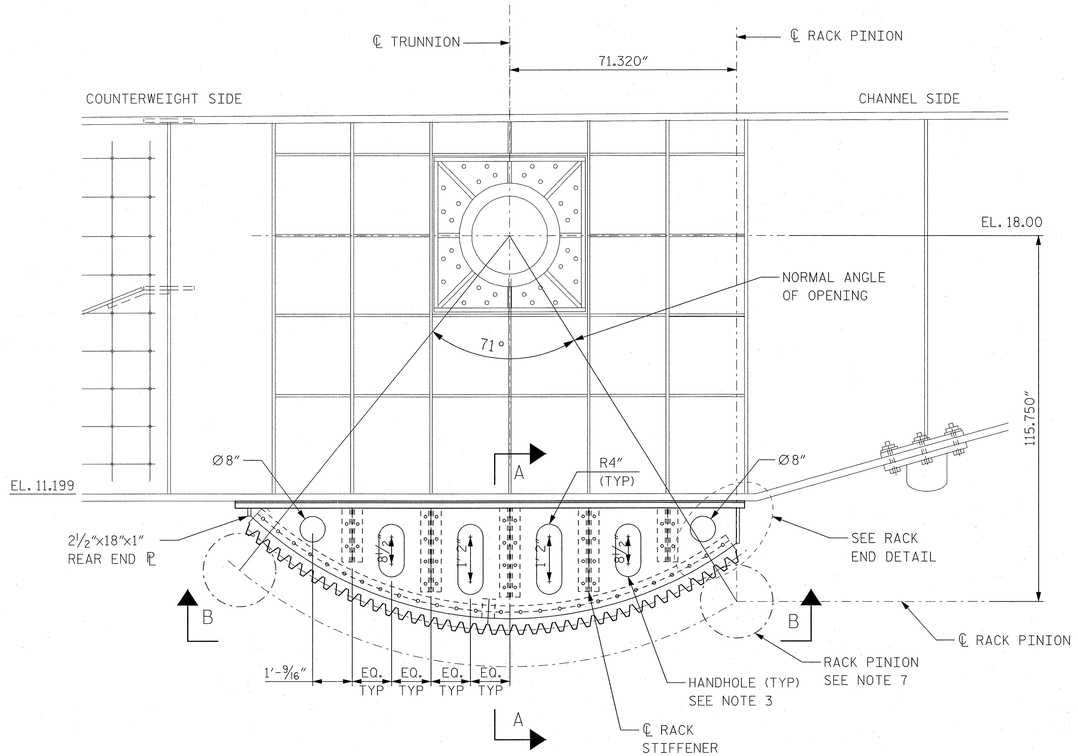

RACK ELEVATION

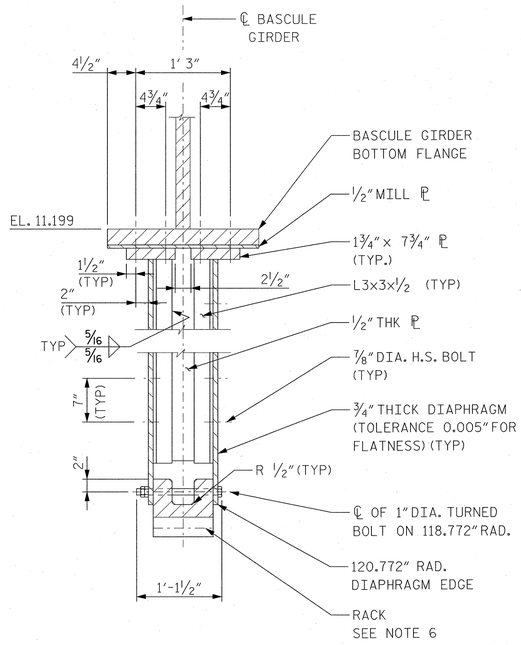

SECTION A-A

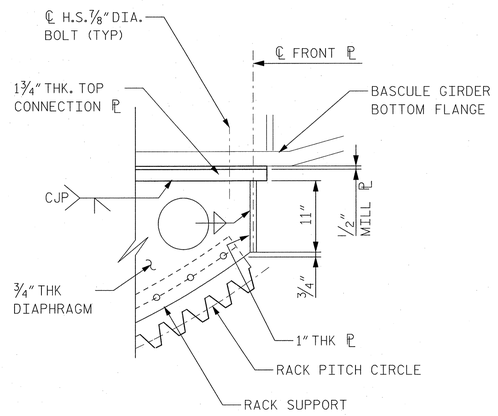

RACK END DETAIL

FRONT END SHOWN
REAR END SIMILAR

NOTES:

1. CONTRACTOR SHALL ADJUST LENGTH OF ALL PLATES TO SUIT RACK LOCATION.
2. CONTRACTOR SHALL COORDINATE ALIGNMENT OF RACK STIFFENER WITH BASCULE STIFFENER. MAX. 7″ BOLT SPACING.
3. CONTRACTOR SHALL FURNISH AND INSTALL REMOVABLE GALV. 9 GAGE EXPANDED METAL COVERS OVER HANDHOLES. SECURE WITH GALV. ½″ CAP BOLTS WITH GALV. OVERSIZED WASHERS.
4. RACK WEB PLATES TO BE PARALLEL FULL LENGTH AFTER FABRICATION.
5. STEEL FOR RACK SUPPORT SHALL BE ASTM A709, GRADE 50. ALL GROOVE WELDS SHALL BE COMPLETE PENETRATION. FILLET WELDS SHALL BE ½″ MINIMUM, UNLESS OTHERWISE NOTED. SUPPORT TO BE STRESS RELIEVE AFTER WELDING.
6. FOR DETAILS OF RACK, SEE DWG. NO. M6.
7. FOR DETAILS OF RACK PINION, SEE DWG. NO. M10.

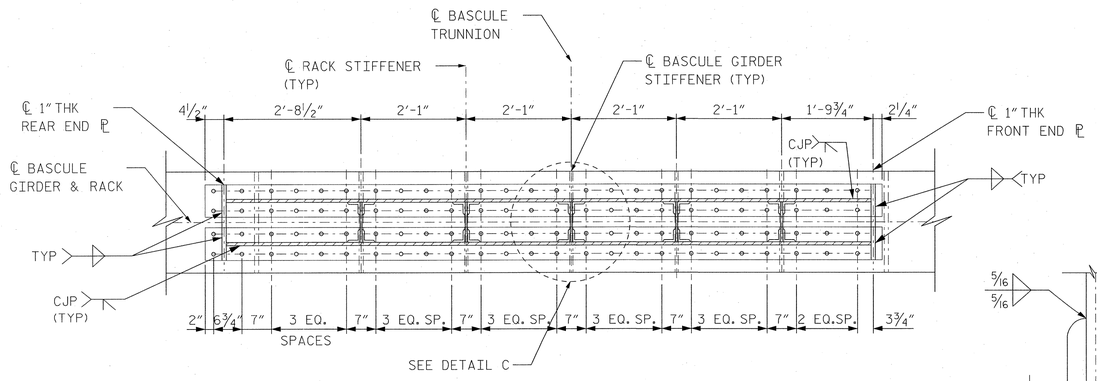

SECTION B-B

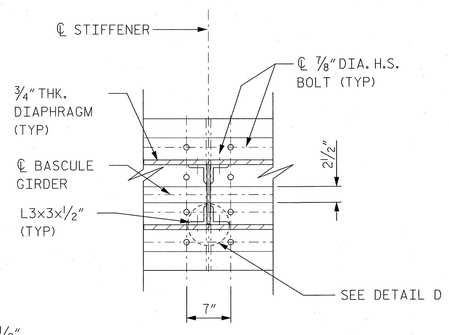

DETAIL C

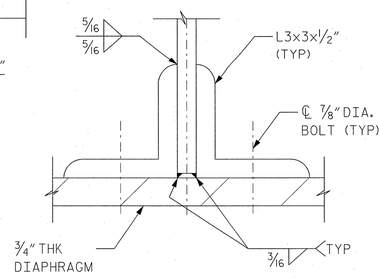

DETAIL D

PROJECT NO. B-2532

CRAVEN COUNTY

STATION: 31+21.29 -L-

STATE OF NORTH CAROLINA
DEPARTMENT OF TRANSPORTATION
RALEIGH, NC

RACK CONNECTION
AND DETAILS

NORTH CAROLINA PROFESSIONAL SEAL 032371 ENGINEER STEVEN K. NG 10/20/06

HNTB HNTB NORTH CAROLINA, P.C.
343 E. Six Forks Rd., Suite 200, Raleigh, N.C. 27609

DRAWN BY SK DATE 10/06
CHECKED BY SN DATE 10/06
DWG. NO. M5

REVISIONS						SHEET NO.
NO.	BY	DATE	NO.	BY	DATE	S-218
1			3			TOTAL SHEETS
2			4			348

sht AT W10610
10/20/2006 15:53
J:\cadd\42873 - Alfred Cunningham\DGN 100% Submission\Mechanical Final\AB2532_M0_M5_RackConnection.dgn

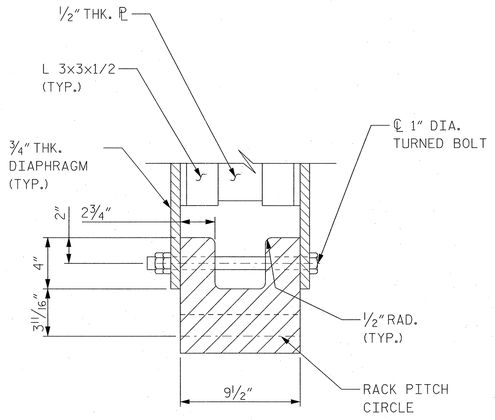

SECTION D-D

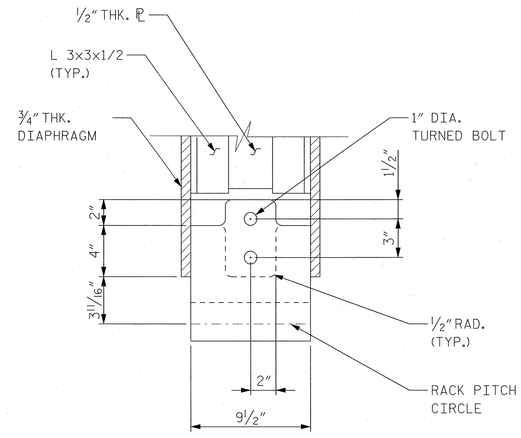

SECTION E-E

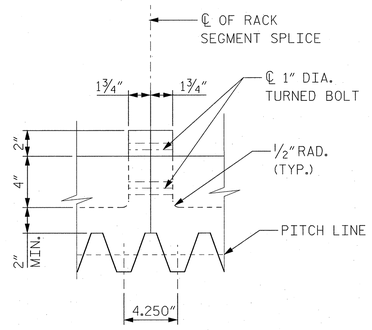

RACK SPLICE

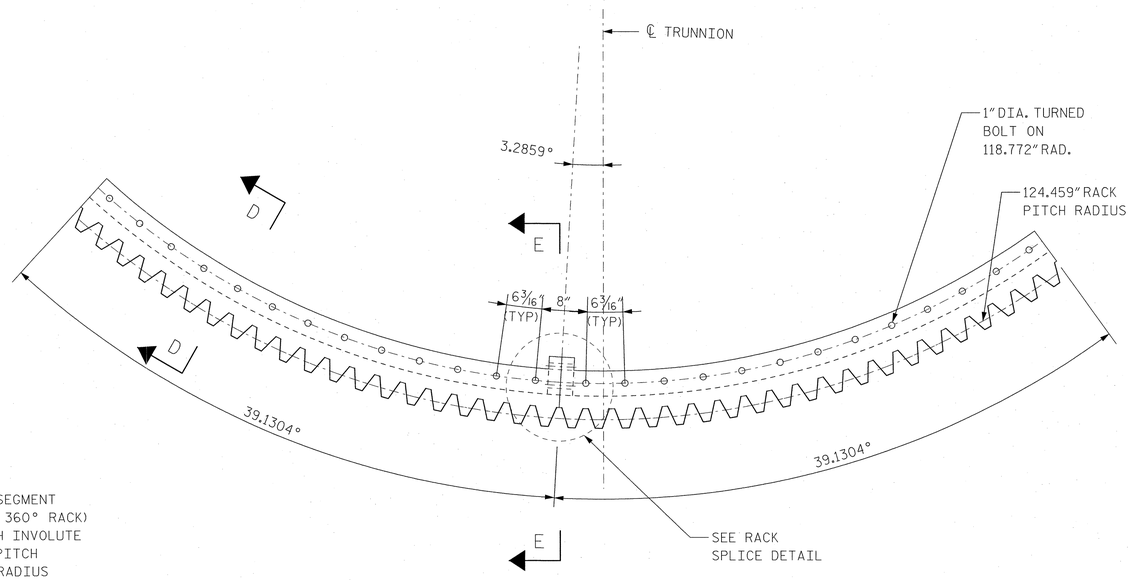

RACK RS

20 TEETH PER SEGMENT
(184 TEETH FOR 360° RACK)
20° FULL DEPTH INVOLUTE
4 1/4" CIRCULAR PITCH
124.459" PITCH RADIUS
9 1/2" FACE WIDTH
0.040"-0.055" NOMINAL MATERIAL REMOVED FOR BACKLASH
CONTRACTOR TO DETERMINE OPTIMAL MATERIAL
TO BE REMOVED FOR BACKLASH

RACK SEGMENT

NOTES:

1. CONTRACTOR HAS THE OPTION OF MAKING THE RACK ENTIRELY AS ONE SEGMENT.
2. CONTRACTOR SHALL SCRIBE THE PITCH CIRCLE ON BOTH SIDES OF THE RACK AND RACK PINION.
3. FOR RACK PINION DETAIL, SEE DWG. NO. M12.
4. ALL FORGINGS TO HAVE SUFFICIENT LENGTH FROM WHICH STANDARD SIZED SPECIMEN MAY BE OBTAINED.
5. REMOVE ALL BURRS AND BREAK ALL SHARP EDGES.
6. FOR PAINT AND PROTECTION OF MACHINERY, SEE SPECIAL PROVISIONS.
7. SEE MECHANICAL SPECIAL PROVISIONS FOR ADDITIONAL MATERIAL AND INSTALLATION REQUIREMENTS.

PROJECT NO. B-2532
CRAVEN COUNTY
STATION: 31+21.29 -L-

NORTH CAROLINA PROFESSIONAL SEAL 032371 ENGINEER STEVEN K. NG 10/20/06

STATE OF NORTH CAROLINA
DEPARTMENT OF TRANSPORTATION
RALEIGH, NC

RACK SEGMENT DETAILS

HNTB NORTH CAROLINA, P.C.
343 E. Six Forks Rd., Suite 200, Raleigh, N.C. 27609

DRAWN BY SK DATE 10/06
CHECKED BY SN DATE 10/06
DWG. NO. M6

REVISIONS						SHEET NO.
NO.	BY	DATE	NO.	BY	DATE	S-249
1			3			TOTAL SHEETS
2			4			348

sng AT NYOD010
18-OCT-2006 16:53
J:\cadd\42673 - Alfred Cunningham\DGN\100% Submission\Mechanical Final\B2532_MD_M6_RackSegment.dgn

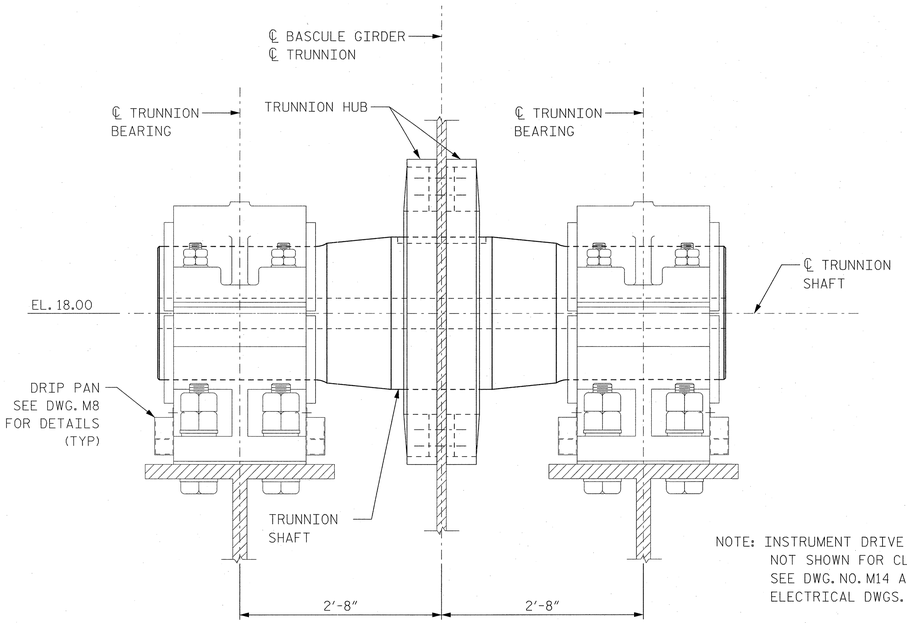

TRUNNION HUB AND BEARING ASSEMBLY

(4 REQUIRED)

NOTE: INSTRUMENT DRIVE NOT SHOWN FOR CLARITY SEE DWG. NO. M14 AND ELECTRICAL DWGS.

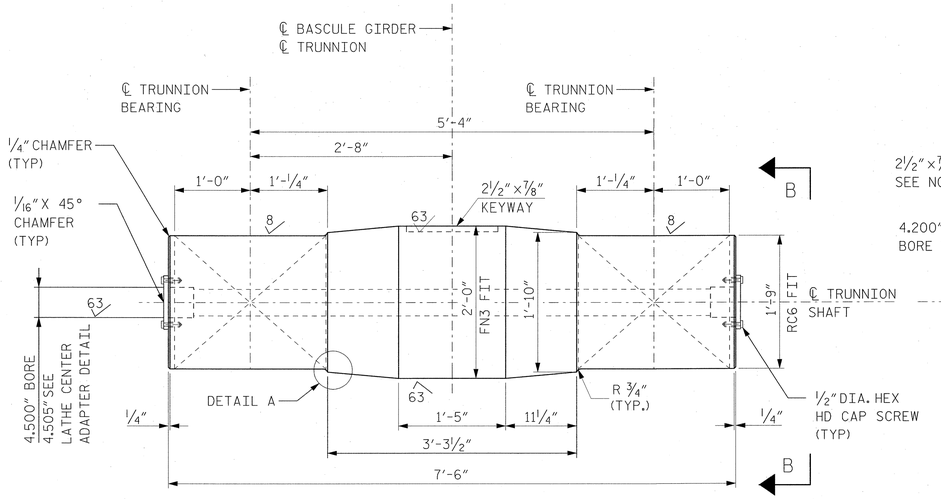

TRUNNION SHAFT

ASTM A668, CLASS H

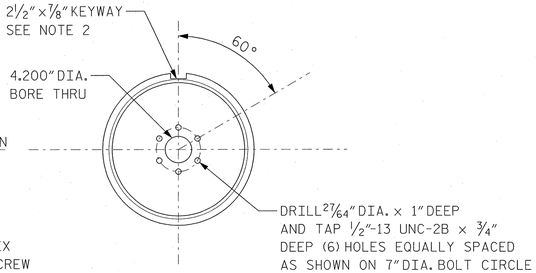

VIEW B-B

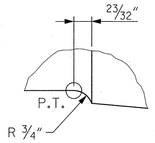

DETAIL A

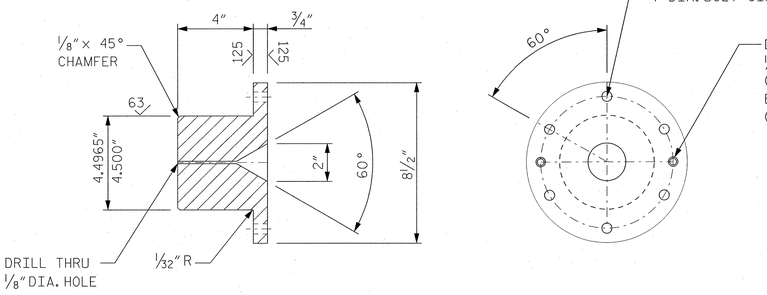

LATHE CENTER ADAPTER

ASTM A108, GRADE 1045
(8 REQUIRED)

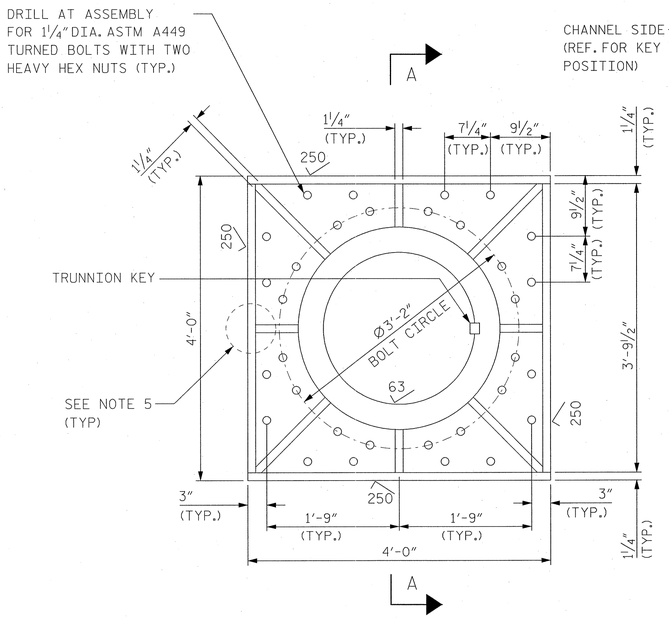

ELEVATION VIEW

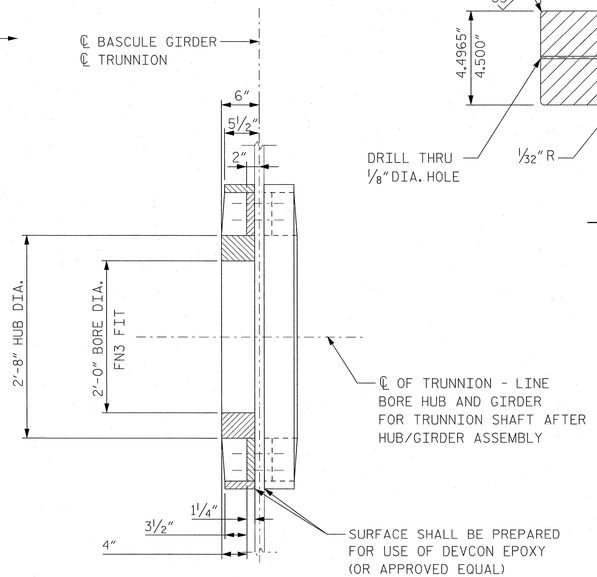

SECTION A-A

TRUNNION HUB

ASTM A709, GRADE 50
(2 REQUIRED PER ASSEMBLY)
SEE NOTE 5

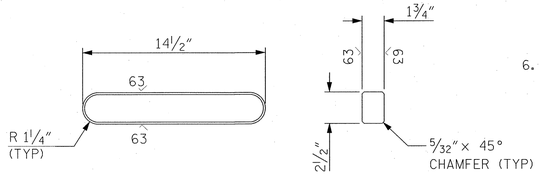

TRUNNION KEY

ASTM A668, CLASS H
(4 REQUIRED)

NOTES:

1. ALL FORGING TO HAVE SUFFICIENT EXTENSION IN LENGTH FROM WHICH STANDARD SIZED SPECIMEN MAY BE OBTAINED.
2. REMOVE ALL BURRS AND BREAK ALL SHARP EDGES.
3. FOR PAINT AND PROTECTION OF MACHINERY, SEE SPECIAL PROVISIONS.
4. SEE SPECIAL PROVISIONS FOR REQUIRED MATERIAL TESTING.
5. ALL PLATE JOINTS TO BE WELDED. ALL WELDS SHALL BE COMPLETE JOINT PENETRATION GROOVE WELDS UNLESS NOTED. STRESS RELIEVE AFTER WELDING.
6. FOR DETAILS OF TRUNNION BEARING, SEE DWG. NO. M8 AND M9.

PROJECT NO. B-2532

CRAVEN COUNTY

STATION: 31+21.29 -L-

STATE OF NORTH CAROLINA
DEPARTMENT OF TRANSPORTATION
RALEIGH, NC

TRUNNION SHAFT AND HUB ASSEMBLY

NORTH CAROLINA PROFESSIONAL ENGINEER SEAL 032371 STEVEN K. NG 10/06/06

HNTB NORTH CAROLINA, P.C.
343 E. Six Forks Rd., Suite 200, Raleigh, N.C. 27609

DRAWN BY SK DATE 10/06
CHECKED BY SN DATE 10/06

DWG. NO. M7

REVISIONS						SHEET NO.
NO.	BY	DATE	NO.	BY	DATE	S-250
1			3			TOTAL SHEETS
2			4			348

orig. "M" W10.10
rev. 10-06-06 KS
J:\Jobs\42873 - Alfred Cunningham\003A\100Z Submittals\en\Mechanical Files\AB2532_MD_M7_TrunnionShaftAssembly.dgn

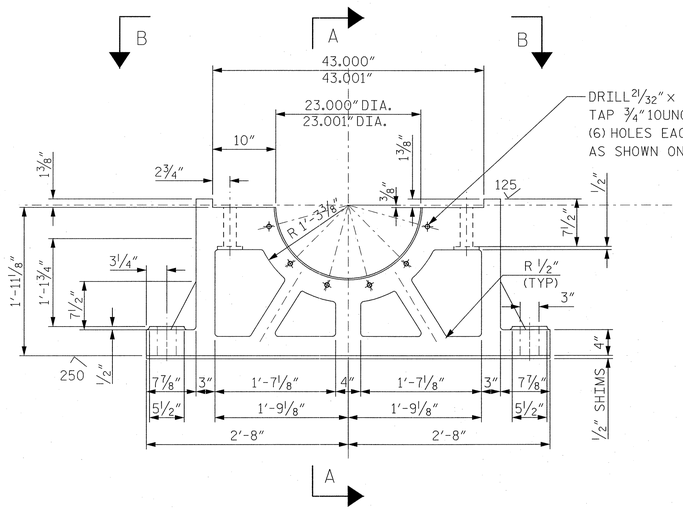

TRUNNION BEARING BASE

ASTM A27, GRADE 70-36 OR
ASTM A709, GRADE 36 WELDMENT

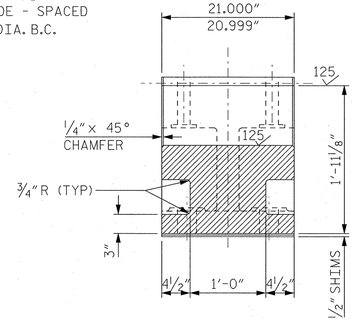

SECTION A-A

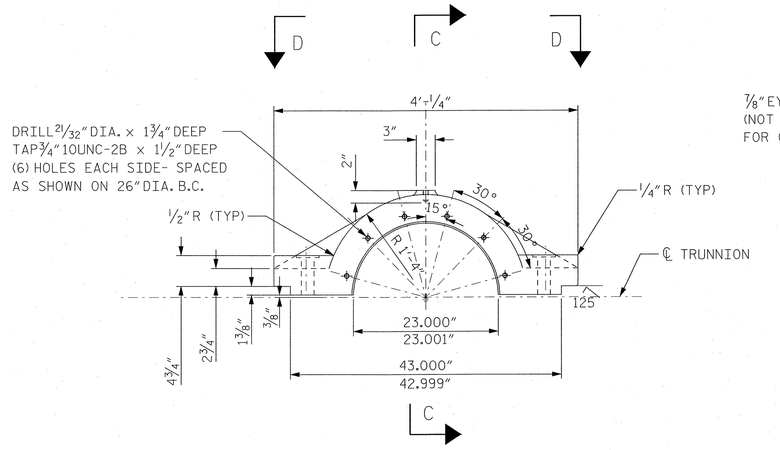

TRUNNION BEARING CAP

ASTM A27, GRADE 70-36 OR
ASTM A709, GRADE 36 WELDMENT

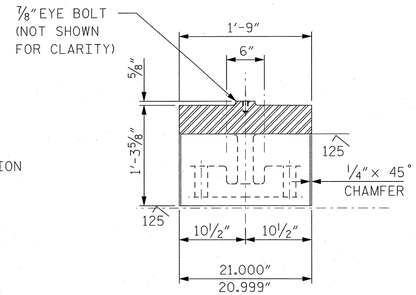

SECTION C-C

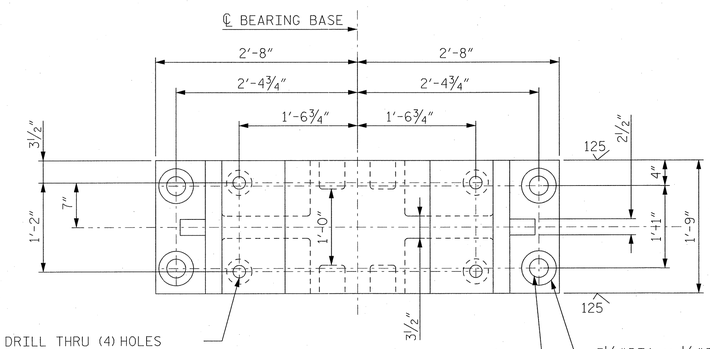

VIEW B-B

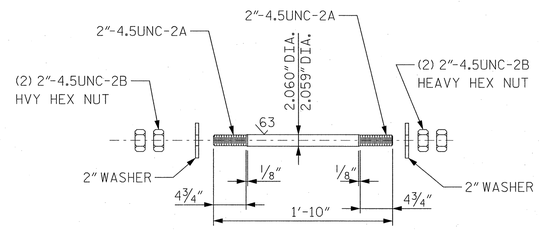

TURNED STUD

ASTM A449

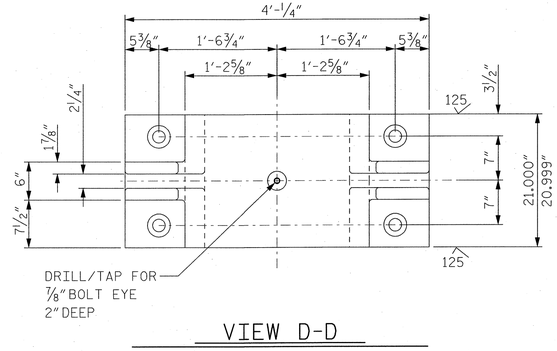

VIEW D-D

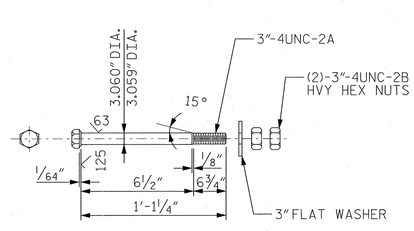

TURNED BOLT

ASTM A449

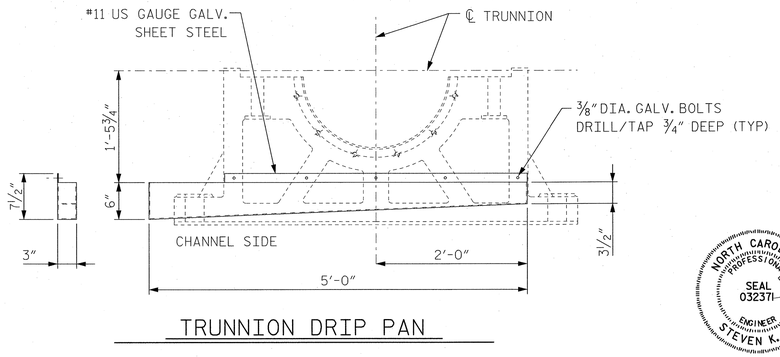

TRUNNION DRIP PAN

NOTES:

1. REMOVE ALL BURRS AND BREAK ALL SHARP EDGES.
2. FOR PAINT AND PROTECTION OF MACHINERY, SEE SPECIAL PROVISIONS.
3. SEE SPECIAL PROVISIONS FOR REQUIRED MATERIAL TESTING.
4. ALL WELDS SHALL BE COMPLETE PENETRATION UNLESS NOTED. STRESS RELEIVE AFTER WELDING.
5. FOR DETAILS OF TRUNNION BUSHING, SEE DWG. NO. M9.
6. FOR DETAILS OF TRUNNION SHAFT AND ASSEMBLY, SEE DWG. NO. M7.
7. ALL CASTINGS SHALL INCLUDE A TEST COUPON WHICH CAN BE FINISHED TO A 1" CUBE. THE COUPON SHALL NOT BE SURROUNDED WITH A CHILL TO SHOW A HIGHER STRENGTH THAN THE BODY OF THE CASTING.
8. RADII NOT CALLED OUT SHALL BE STANDARD RADII FOR CASTING PURPOSES.

PROJECT NO. B-2532

CRAVEN **COUNTY**

STATION: 31+21.29 -L-

STATE OF NORTH CAROLINA
DEPARTMENT OF TRANSPORTATION
RALEIGH, NC

TRUNNION BEARING HOUSING DETAILS

HNTB NORTH CAROLINA, P.C.
343 E. Six Forks Rd., Suite 200, Raleigh, N.C. 27609

DRAWN BY SK DATE 10/06
CHECKED BY SN DATE 10/06
DWG. NO. **M8**

REVISIONS						SHEET NO.
NO.	BY	DATE	NO.	BY	DATE	S-261
1			3			TOTAL SHEETS
2			4			348

sma AT W10D10
SF 00C00 - 0663
J:\cad\d-2873 - Alf red Cunningham\DGN 1000\ Submission\Mechanical Fhwa\B2532_M0_M8_TrunnionBearingdgn

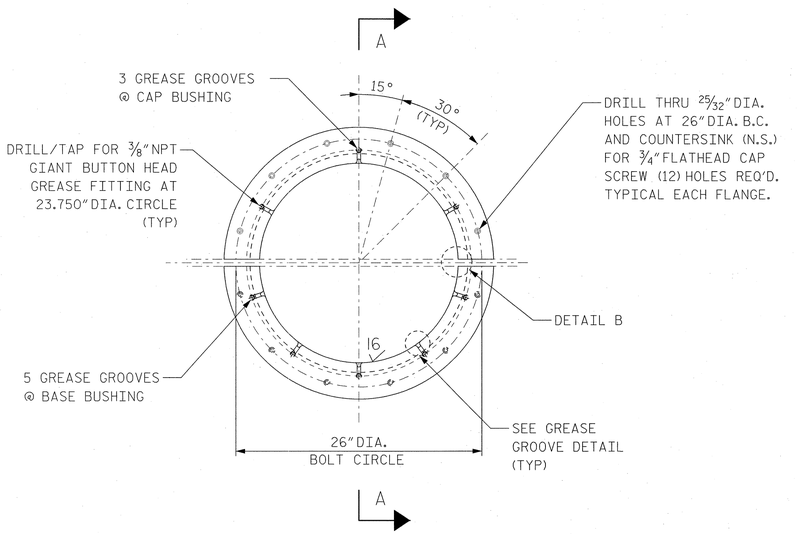

SPLIT TYPE BUSHING

ASTM B22 - ALLOY C91100

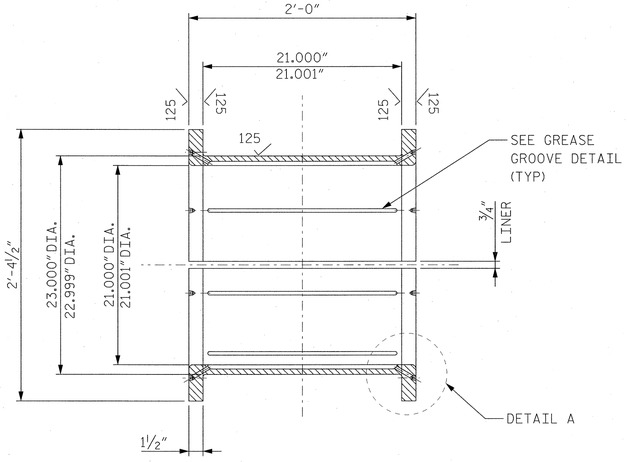

SECTION A-A

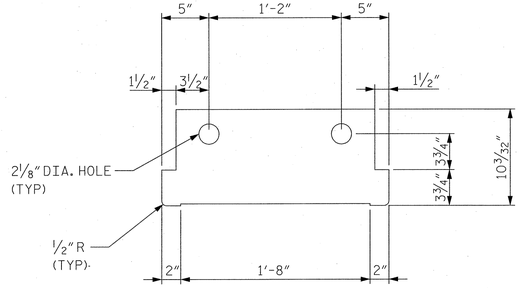

LINER DETAIL

NOTES:

1. REMOVE ALL BURRS AND BREAK ALL SHARP EDGES.
2. FOR DETAILS OF TRUNNION HOUSING, SEE DWG. NO. M8.
3. FURNISH ALEMITE 1822-A GIANT BUTTON HEAD GREASE FITTINGS ON OUTBOARD SIDE OF BEARING. FURNISH PLUG FITTINGS ON INBOARD SIDE OF BEARING.

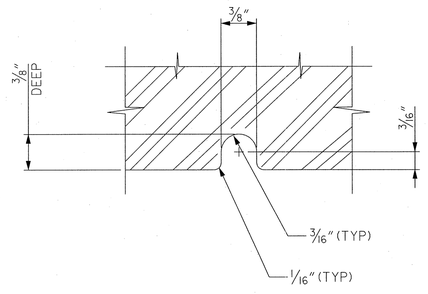

GREASE GROOVE DETAIL

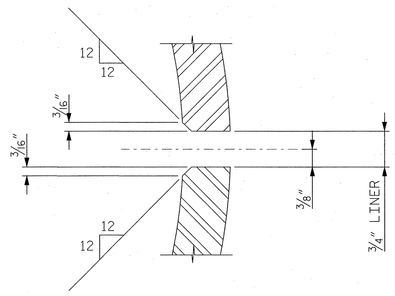

DETAIL B

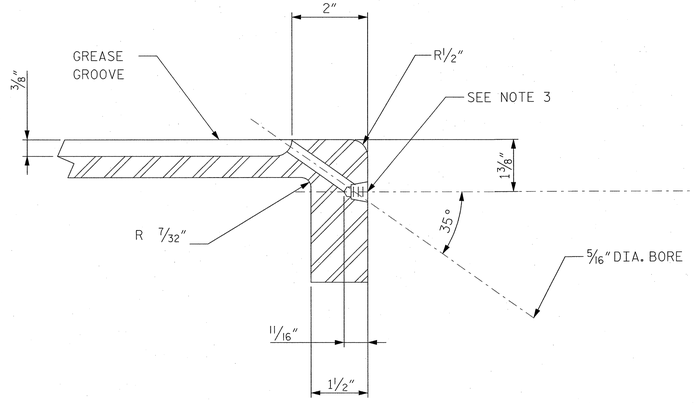

DETAIL A

PROJECT NO. B-2532

CRAVEN COUNTY

STATION: 31+21.29 -L-

STATE OF NORTH CAROLINA
DEPARTMENT OF TRANSPORTATION
RALEIGH, NC

TRUNNION BEARING BUSHING DETAILS

NORTH CAROLINA PROFESSIONAL SEAL 032371 ENGINEER STEVEN K. NG 10/20/06

HNTB NORTH CAROLINA, P.C.
343 E. Six Forks Rd., Suite 200, Raleigh, N.C. 27609

DRAWN BY SK DATE 10/06
CHECKED BY SN DATE 10/06
DWG. NO. M9

REVISIONS						SHEET NO.
NO.	BY	DATE	NO.	BY	DATE	S-252
1			3			TOTAL SHEETS
2			4			348

sng AT NYODO10
18-OCT-2006 16:53
J:\cadd\42673 - Alfred Cunningham\DGN\100% Submission\Mechanical Final\B2532_MD_M9_TrunnionBushing.dgn

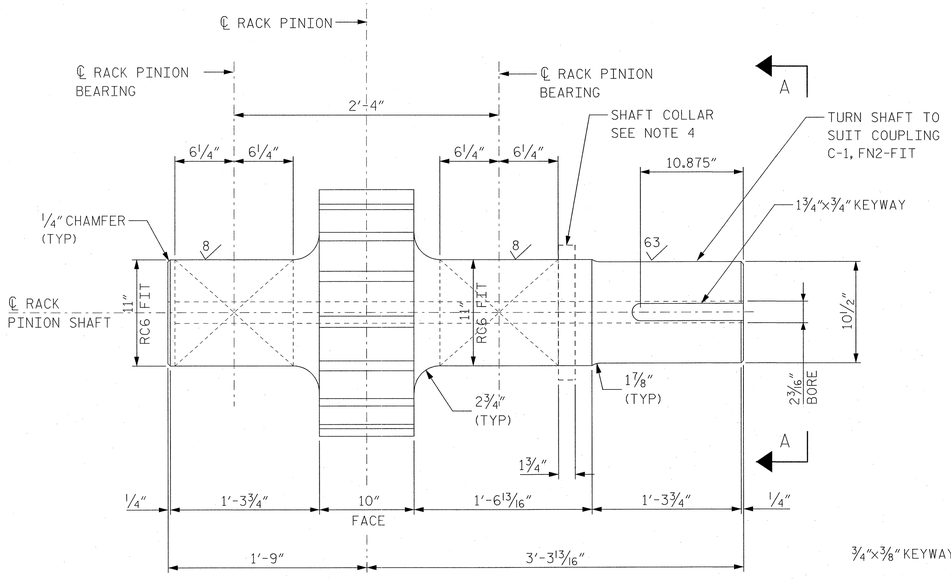

RACK PINION SHAFT S-1

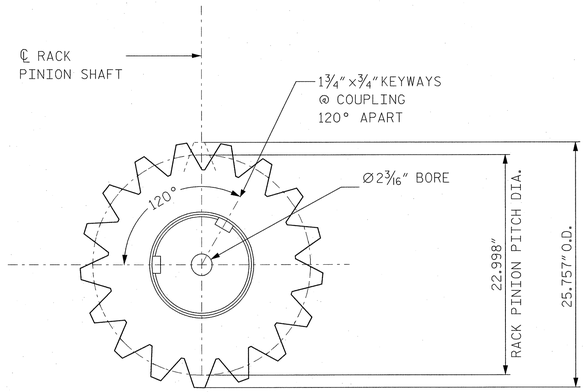

VIEW A-A

NOTES:

1. SHAFT DIMENSIONS BASED ON PRIMARY REDUCER OUTPUT SHAFT LENGTH AND SECONDARY REDUCER INPUT/OUTPUT SHAFT LENGTH. CONTRACTOR SHALL ADJUST DIMENSIONS TO MAINTAIN REDUCERS AND RACK PINION POSITION.
2. FOR KEY MATERIAL SEE MACHINERY SCHEDULE ON DWG. NO. M3.
3. SEE MECHANICAL SPECIAL PROVISIONS FOR ADDITIONAL MATERIAL AND INSTALLATION REQUIREMENTS.
4. SHAFT COLLAR SHALL BE HEAVY DUTY TWO-PIECE CLAMP TYPE COLLAR (14"OD × 1¾"W) WITH ⅝"-18 CAP SCREWS.

   FURNISH 32 MICRO-FINISH ON BOTH SIDES OF COLLAR FOR SLIDING CONTACT WITH BEARING B-2.

   COLLAR MATERIAL: C1117 HOT ROUND BAR
   COLLAR FINISH: BLACK OXIDE FINISH
   CAP SCREW MATERIAL: ALLOY STEEL SOCKET CAP SCREW, HEAT TREATED. GRADE 8, ASTM A574.
5. FOR ADDITIONAL NOTES, SEE DWG. NO. M1.

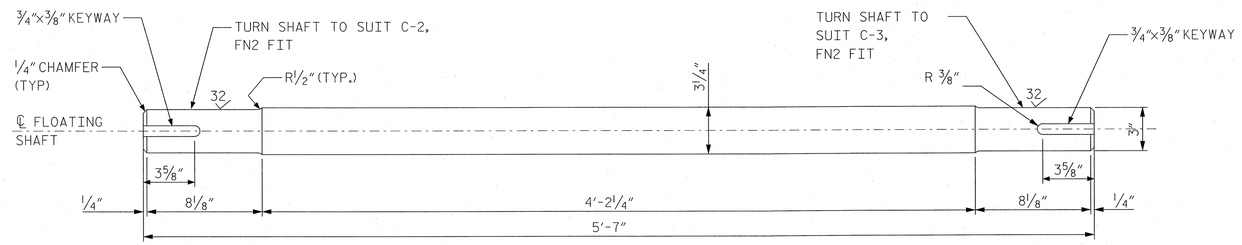

FLOATING SHAFT S-2

RACK PINION, RP

17 TEETH
20° FULL DEPTH INVOLUTE
4¼" CIRCULAR PITCH
22.998" PITCH DIAMETER
10" FACE WIDTH
0.040"-0.055" NOMINAL MATERIAL REMOVED FOR BACKLASH
CONTRACTOR TO DETERMINE OPTIMAL MATERIAL REMOVED FOR BACKLASH

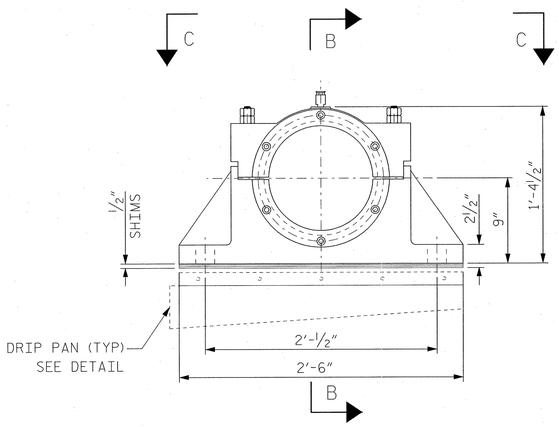

RACK PINION BEARING

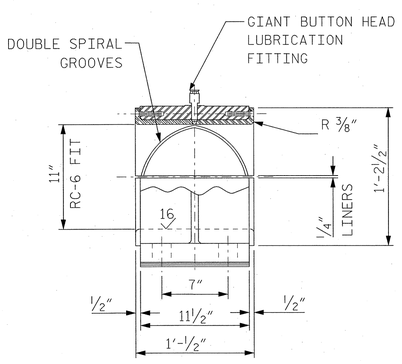

SECTION B-B

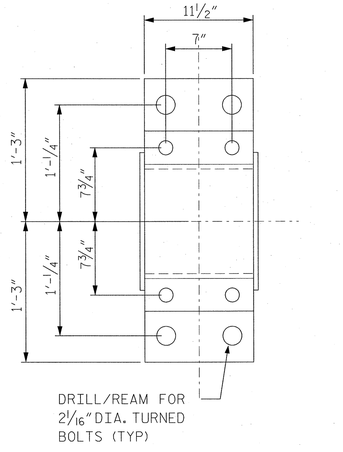

VIEW C-C

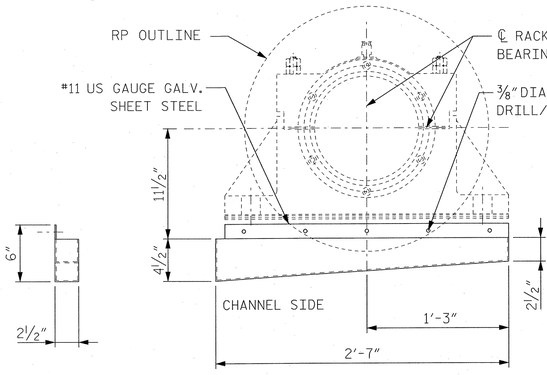

TYPICAL DRIP PAN DETAIL

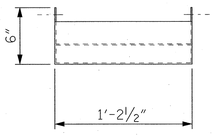

RACK PINION DRIP PAN

PROJECT NO. B-2532
CRAVEN **COUNTY**
STATION: 31+21.29 -L-

STATE OF NORTH CAROLINA
DEPARTMENT OF TRANSPORTATION
RALEIGH, NC

OPERATING MACHINERY DETAILS

NORTH CAROLINA PROFESSIONAL SEAL 032371 ENGINEER STEVEN K. NG 10/20/06

HNTB HNTB NORTH CAROLINA, P.C.
343 E. Six Forks Rd., Suite 200, Raleigh, N.C. 27609

DRAWN BY SK DATE 10/06
CHECKED BY SN DATE 10/06
DWG. NO. **M10**

REVISIONS						SHEET NO.
NO.	BY	DATE	NO.	BY	DATE	S-253
1			3			TOTAL SHEETS
2			4			348

sng AT WOOD IO
10/20/2006 15:53
J:\Cad\142673 - Alfred Cunningham\DGN\1002_SubmittalsMechanical Files\B2532_M10_M Machinery Details.dgn

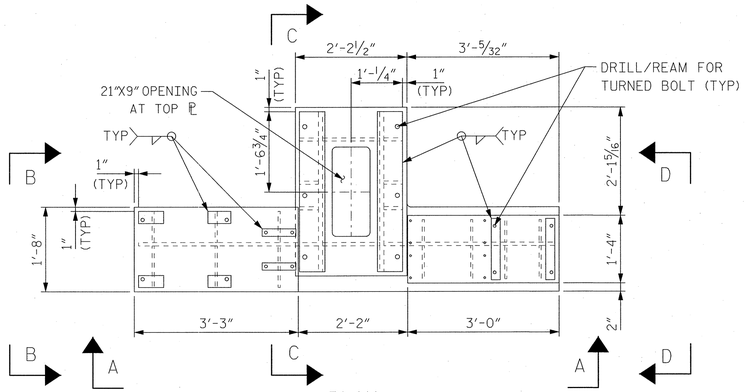

PLAN

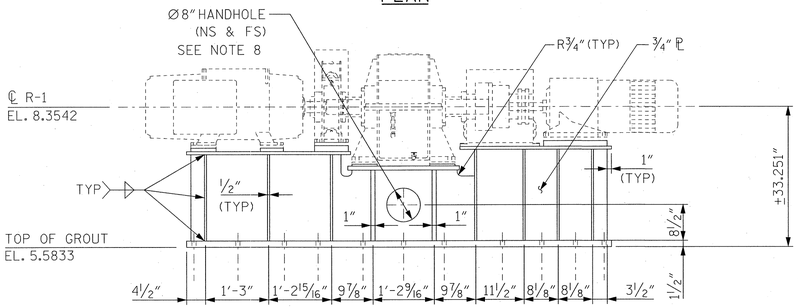

VIEW A-A

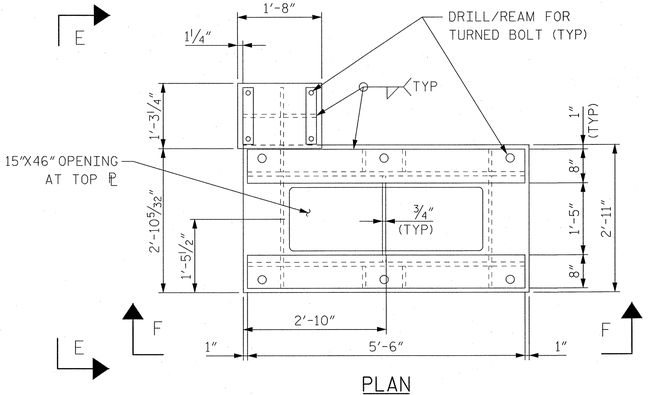

PLAN

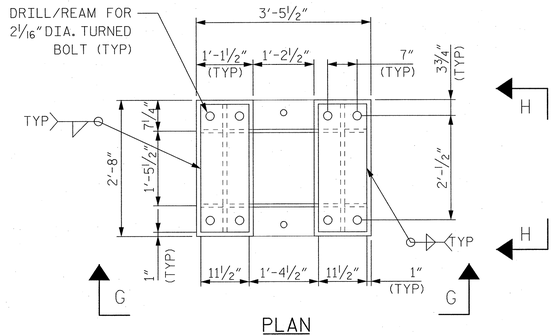

PLAN

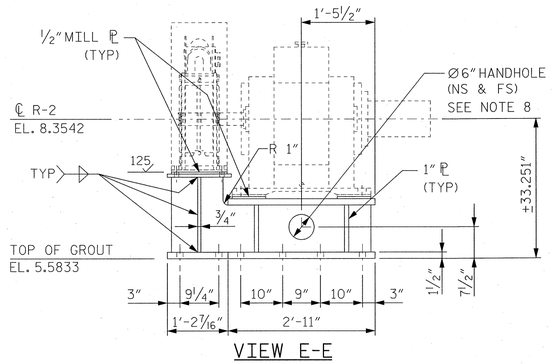

VIEW E-E

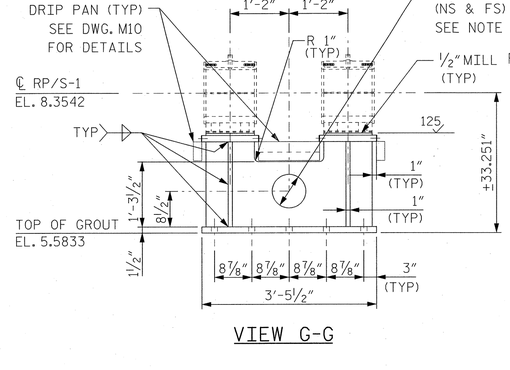

VIEW G-G

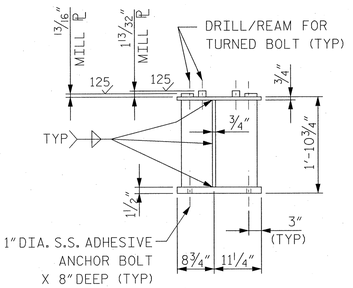

VIEW B-B

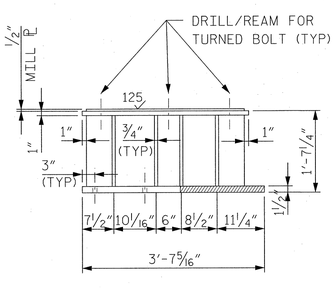

SECTION C-C

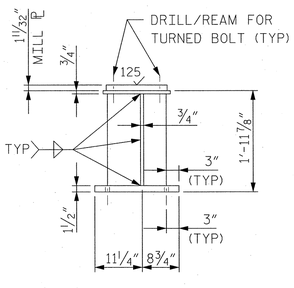

VIEW D-D

PRIMARY REDUCER SUPPORT

VIEW F-F

SECONDARY REDUCER SUPPORT

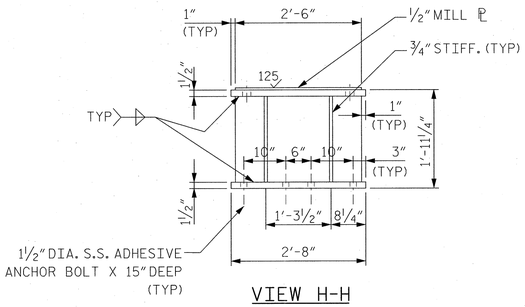

VIEW H-H

RACK PINION BEARING SUPPORT

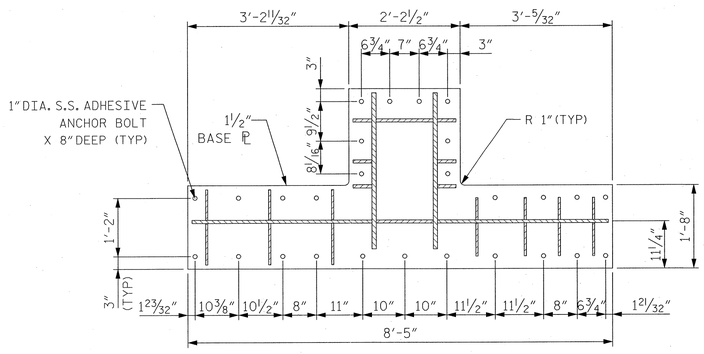

BASE PLATE - PLAN

NOTES:

1. SEE DRAWING NO. M1 FOR GENERAL NOTES REGARDING MACHINERY SUPPORTS.
2. ALL MACHINERY COMPONENT MOUNTING HOLES SHALL BE DRILLED AND REAMED IN THE FIELD, UNLESS AS DIRECTED BY THE ENGINEER.
3. PROVIDE 1" GROUT BETWEEN ALL CONCRETE AND MACHINERY SUPPORT BASES.
4. ALL MOUNTING SURFACES SHALL BE MACHINED IN ACCORDANCE WITH AASHTO REQUIREMENTS AFTER STRESS RELIEF. DIMENSIONS SHOWN ARE AFTER MACHINING.
5. NOMINAL ½" SHIMS REQUIRED UNDER ALL MACHINERY, UNLESS OTHERWISE NOTED.
6. DIMENSIONS FOR SUPPORTS ARE PROVIDED FOR BIDDING PURPOSES ONLY. ACTUAL DIMENSIONS MAY VARY DEPENDING ON EQUIPMENT SELECTED. CONTRACTOR TO COORDINATE AND VERIFY DIMENSIONS.
7. ALL SUPPORTS SHALL BE FABRICATED USING ASTM A709, GRADE 50.
8. HANDHOLES SHALL BE COVERED BY GALV. 9 GAGE EXPANDED METAL COVER W/ GALV. ⅜" CAP BOLTS AND OVERSIZED WASHERS

NORTH CAROLINA PROFESSIONAL SEAL 032371 ENGINEER STEVEN K. NG 10/20/06

PROJECT NO. B-2532

CRAVEN **COUNTY**

STATION: 31+21.29 -L-

STATE OF NORTH CAROLINA
DEPARTMENT OF TRANSPORTATION
RALEIGH, NC

OPERATING MACHINERY SUPPORT DETAILS

HNTB HNTB NORTH CAROLINA, P.C.
343 E. Six Forks Rd., Suite 200, Raleigh, N.C. 27609

DRAWN BY SK DATE 10/06
CHECKED BY SN DATE 10/06
DWG. NO. **M11**

REVISIONS						SHEET NO.
NO.	BY	DATE	NO.	BY	DATE	S-21
1			3			TOTAL SHEETS
2			4			348

stng AT WORKING
10/20/2006 8:53:13
J:\coadd\42673 - Alfred Cunningham\DGN\1003 Submittal\on Mechanical Files\B2532_MD_M11_MechinerySupport.dgn

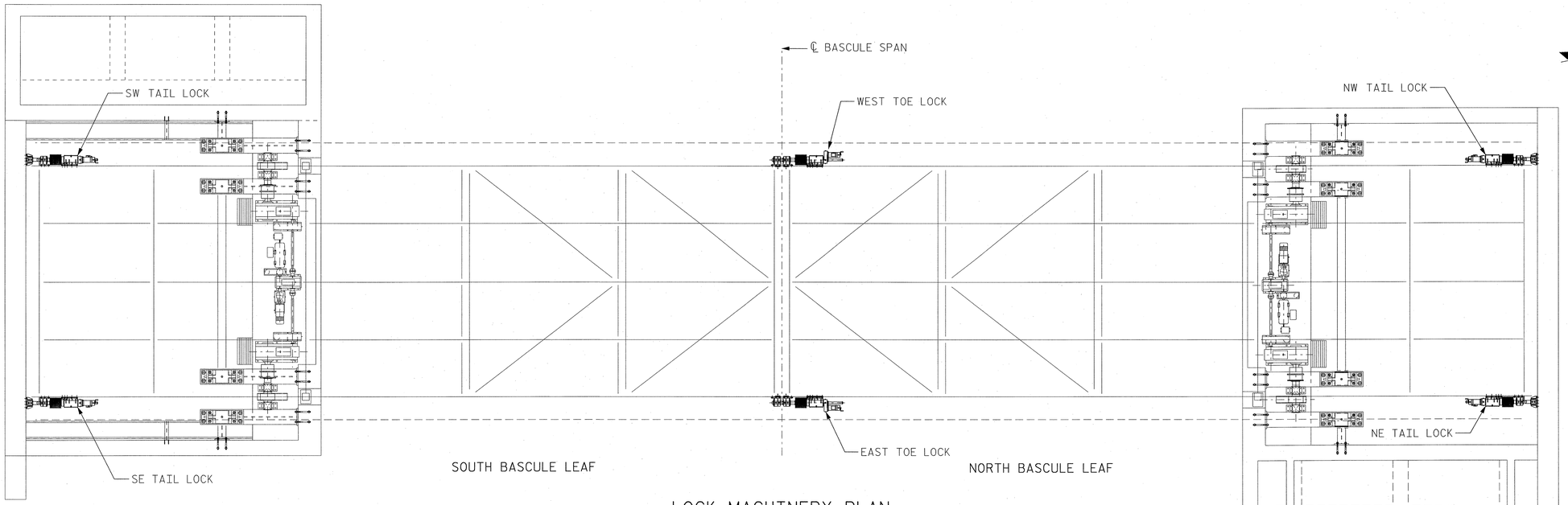

LOCK MACHINERY PLAN

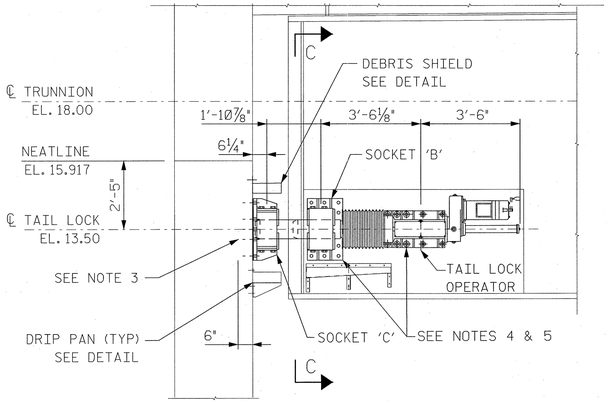

TAIL LOCK ELEVATION

SE AND NW HEEL LOCKS SHOWN
SW AND NE HEEL LOCKS OPPOSITE HAND

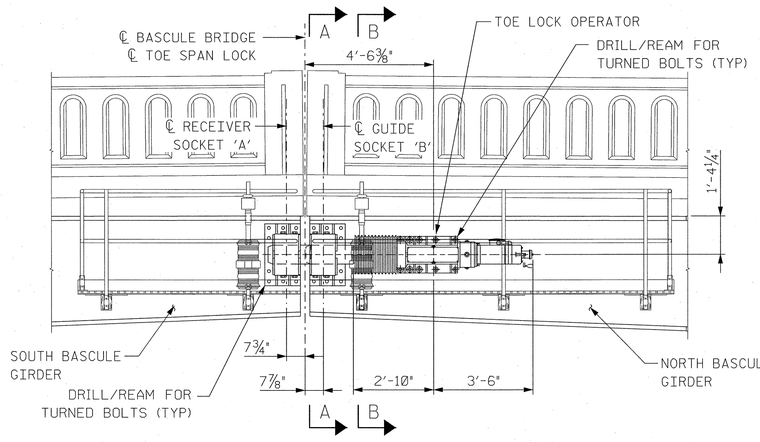

TOE LOCK ELEVATION

EAST TOE LOCK SHOWN
WEST TOE LOCK OPPOSITE HAND

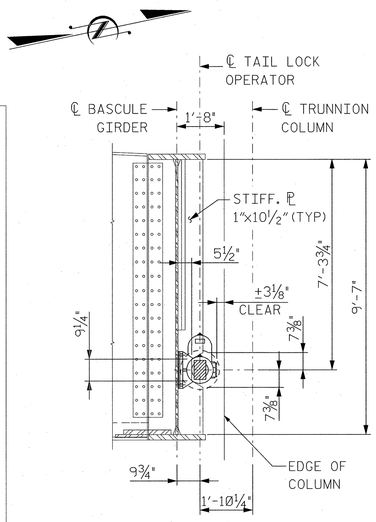

SECTION C-C

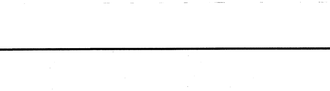

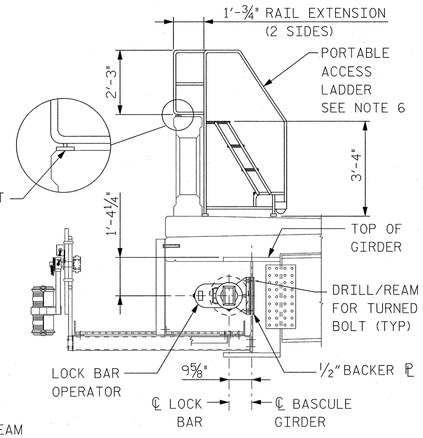

SECTION B-B

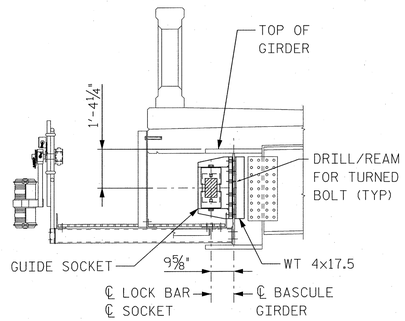

SECTION A-A

NOTES:

1. FOR LOCK OPERATOR AND SOCKET DETAILS, SEE DWG. NO. M13.
2. FOR LOCK MACHINERY NOTES, SEE DWG. NO. M1.
3. CORE DRILL ⅞" DIA. X 6" DEEP HOLE FOR ¾" DIA. S.S. ADHESIVE ANCHOR BOLT.
4. FIELD DRILL AND TAP INTO GIRDER WEB AND INTERIOR CTWT ℙ X 3½" DEEP FOR 1⅛" DIA. ASTM A325 H.S. CAP BOLTS. FIELD DRILL INTO GIRDER WEB AND CTWT ℙ X 2½" DEEPAND DRIVE FIT 1¼" DIA. DOWELS AS NOTED ON DWG. M13. (NE & SE TAIL LOCK ONLY)
5. FIELD DRILL AND CORE DRILL 1¼" DIA. X 10" DEEP HOLE FOR 1⅛" DIA. S.S. ADHESIVE ANCHOR BOLTS. FIELD DRILL INTO GIRDER WEB X 1⅜" DEEP AND DRIVE FIT 1¼" DIA. DOWELS AS NOTED ON DWG. M13. (NW & SW TAIL LOCK ONLY).
6. 28"X37" TILT TO ROLL STEEL ROLLING PLATFORM LADDER W/ GRIP STRUT STEPS MEETING OSHA & ANSI A14.7. 450 LBS. MIN. LOAD RATING. PROVIDE RAIL EXTENSIONS, LEVELING MOUNTS AND CHAIN GUARD FOR WALK-THRU.

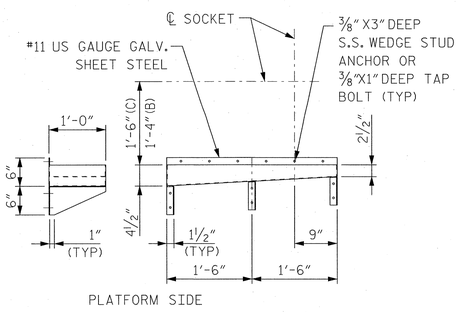

PLATFORM SIDE

DRIP PAN DETAIL

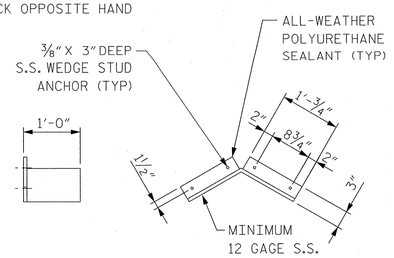

DEBRIS SHIELD DETAIL

PROJECT NO. B-2532

CRAVEN **COUNTY**

STATION: 31+21.29 -L-

STATE OF NORTH CAROLINA
DEPARTMENT OF TRANSPORTATION
RALEIGH, NC

SPAN LOCK MACHINERY

NORTH CAROLINA PROFESSIONAL SEAL 032371 ENGINEER STEVEN K. NG 10/24/06

HNTB NORTH CAROLINA, P.C.
343 E. Six Forks Rd., Suite 200, Raleigh, N.C. 27609

DRAWN BY SN DATE 10/06
CHECKED BY EK DATE 10/06

DWG. NO. **M12**

REVISIONS						SHEET NO.
NO.	BY	DATE	NO.	BY	DATE	S-233
1			3			TOTAL SHEETS
2			4			348

sing AT WOOD,10
sig DOT VER 08.01.03
J:\Jobs\44267.3 * AR\ed Cunningham\OSW\1002 Submissions\Mechanical Files\AB2532_M12_SpanLockMachinery.dgn

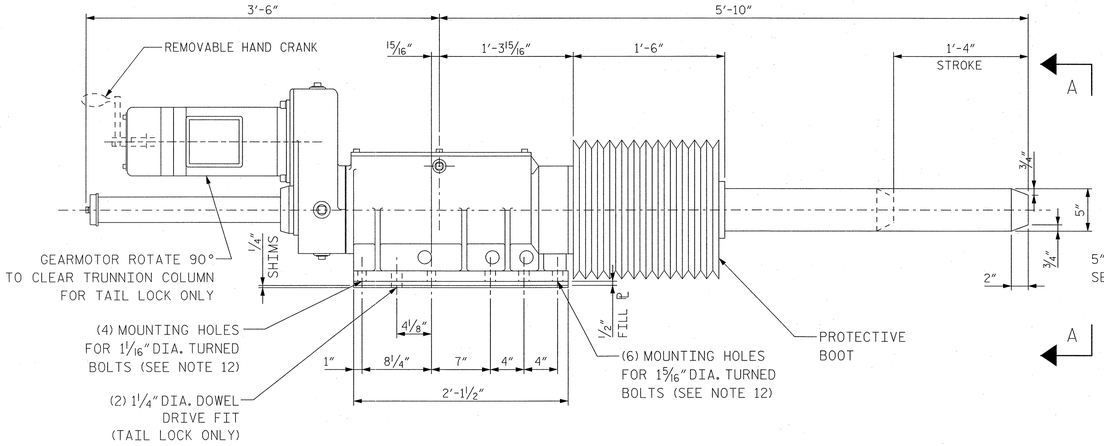

PLAN - LOCK BAR OPERATOR

SEE NOTE 10

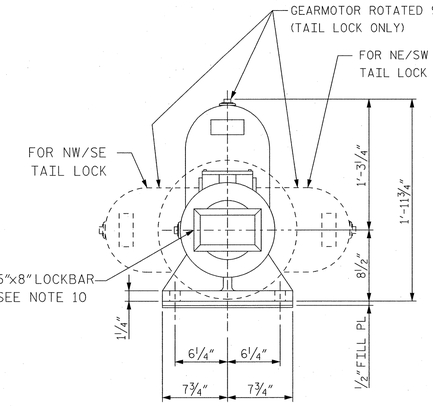

SECTION A-A

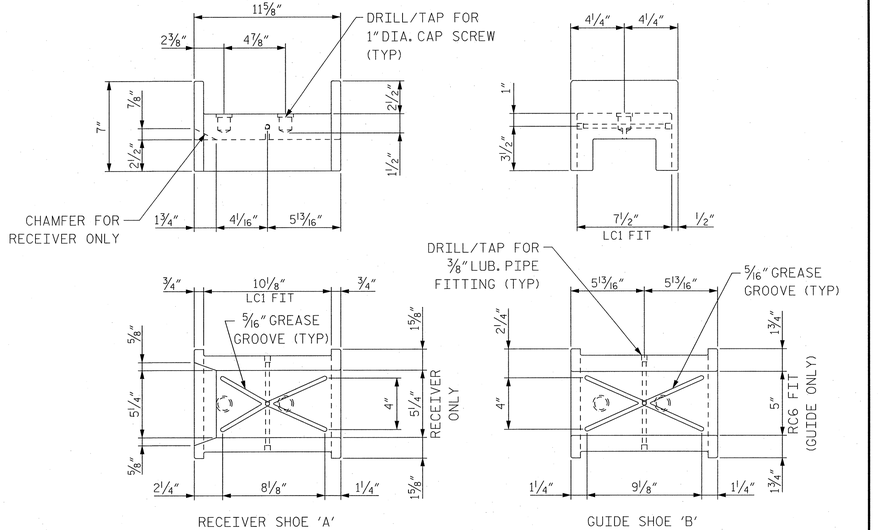

RECEIVER SHOE 'A'

GUIDE SHOE 'B'

DETAIL - SHOES 'A' & 'B'

ASTM B584, C86300

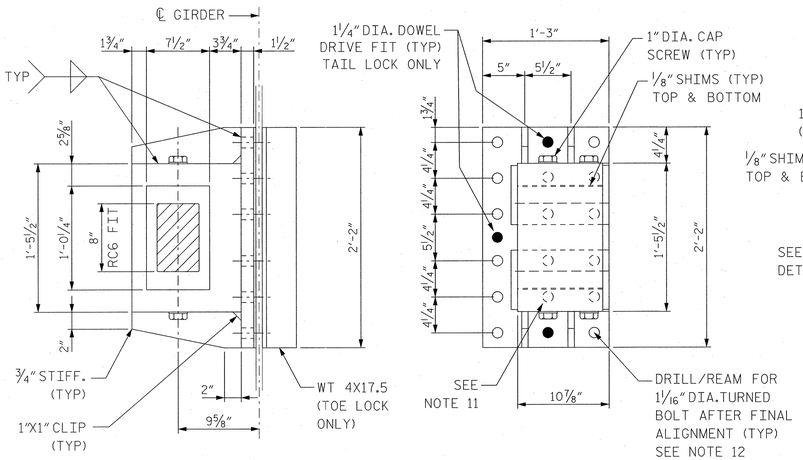

NOTE: SHOES NOT SHOWN FOR CLARITY

NOTE: SHOES NOT SHOWN FOR CLARITY

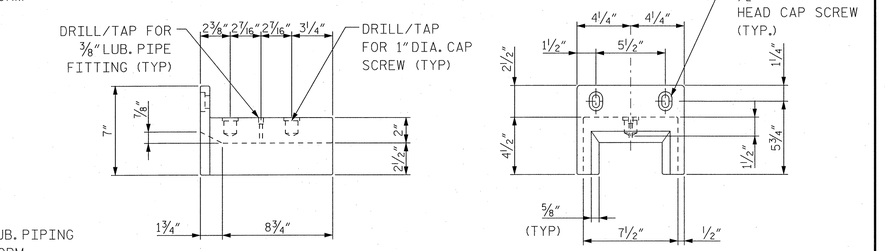

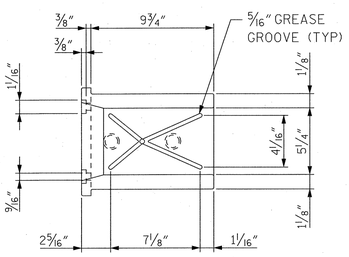

DETAIL - SHOE 'C'

ASTM B584, C86300

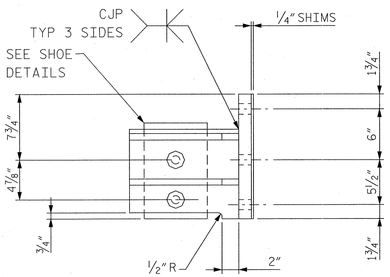

SOCKET 'A' & 'B'

ASTM A709, GRADE 50

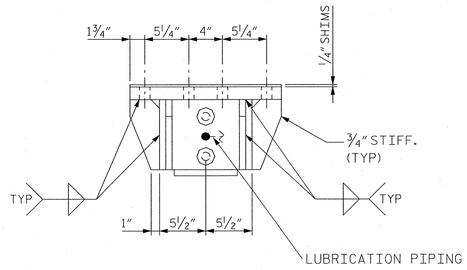

SOCKET 'C'

ASTM A709, GRADE 50

NOTES:

1. SEE DWG NO. M1 FOR GENERAL MACHINERY NOTES.
2. DRILL AND REAM FOR ALL TURNED BOLTS.
3. LUBRICATION PIPING NOT SHOWN FOR CLARITY.
4. PROVIDE ONE SET OF SPARE SHOES FOR EACH TYPE OF SHOE (A, B, AND C) INCLUDING SHIMS.
5. FOR TOE AND TAIL LOCK MACHINERY LOCATION SEE DWG NO. M12.
6. REMOVE ALL BURRS AND BREAK ALL SHARP EDGES.
7. FOR REQUIRED MATERIAL TESTING, PAINT AND PROTECTION OF MACHINERY, SEE SPECIAL PROVISIONS.
8. ALL WELDS SHALL BE COMPLETE PENETRATION UNLESS NOTED. STRESS RELIEVE AFTER WELDING. 1/2" MINIMUM FILLET WELDS.
9. EACH SOCKET REQUIRES TWO SHOES (UPPER AND LOWER).
10. LOCK BAR MATERIAL SHALL BE ASTM A668 CLASS H (FOR TOE LOCKS) AND CLASS G (FOR TAIL LOCKS).
11. FIELD DRILL THROUGH BASCULE GIRDER WEB, SHIMS, AND ANY FILL ℄ 15/16" DIA. FIELD DRILL AND TAP INTO SOCKET ASSEMBLY MOUNTING ℄ 7/8" DEEP FOR 7/8" DIA ASTM A325, H.S. CAP BOLT. (TOE LOCK ONLY)
12. FOR TAIL LOCK SOCKETS AND OPERATOR MOUNTING, SEE DWG. M12.

PROJECT NO. B-2532

CRAVEN COUNTY

STATION: 31+21.29 -L-

STATE OF NORTH CAROLINA
DEPARTMENT OF TRANSPORTATION
RALEIGH, NC

SPAN LOCK MACHINERY DETAILS

NORTH CAROLINA PROFESSIONAL SEAL 032371 ENGINEER STEVEN K. NG 10/26/06

HNTB NORTH CAROLINA, P.C.
343 E. Six Forks Rd., Suite 200, Raleigh, N.C. 27609

DRAWN BY SN DATE 10/06
CHECKED BY EK DATE 10/06

DWG. NO. M13

REVISIONS						SHEET NO.
NO.	BY	DATE	NO.	BY	DATE	S-256
1			3			TOTAL SHEETS
2			4			348

sma AT W10X49.10
BEARING PILE
J:\cad\428273 - Alfred Cunningham\OSN 10001 Submission\Mechanical Files\AB2532_M0_M13_SpanLockDetails1.dgn

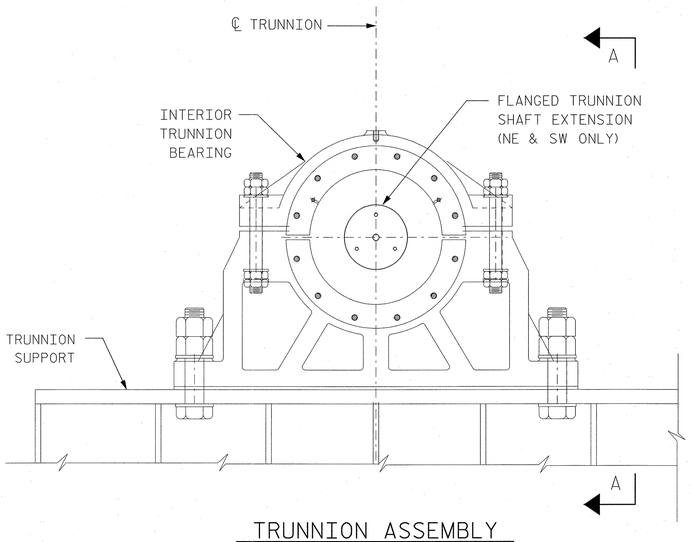

TRUNNION ASSEMBLY

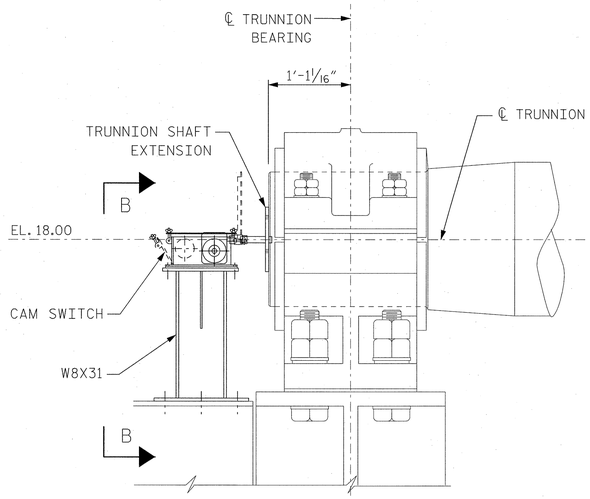

VIEW A-A

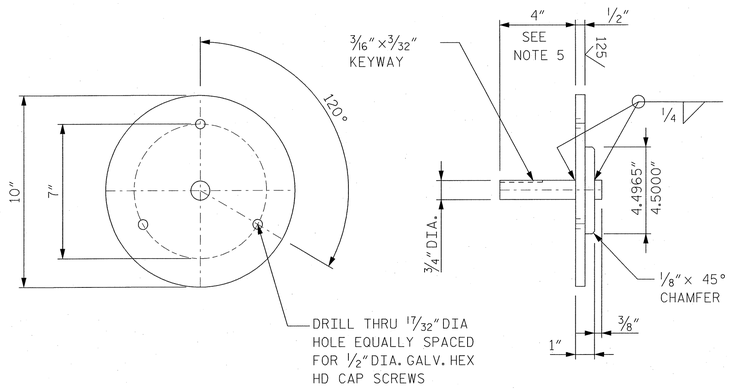

TRUNNION SHAFT EXTENSION

ASTM A709, GRADE 36
(2 REQUIRED)

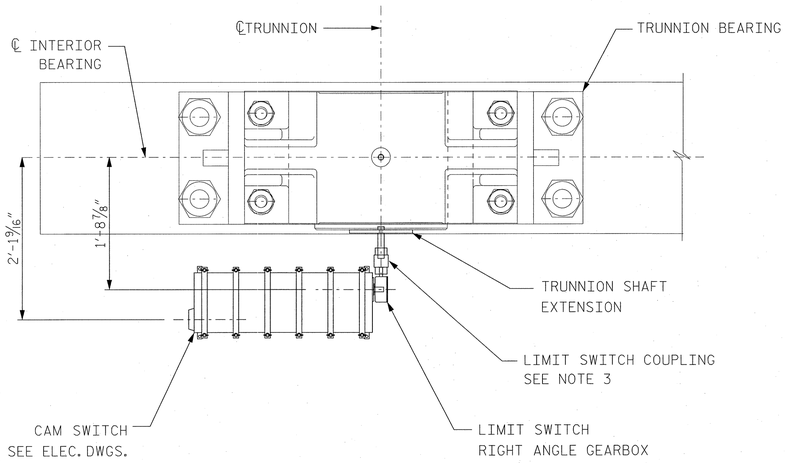

PLAN - INSTRUMENT DRIVE

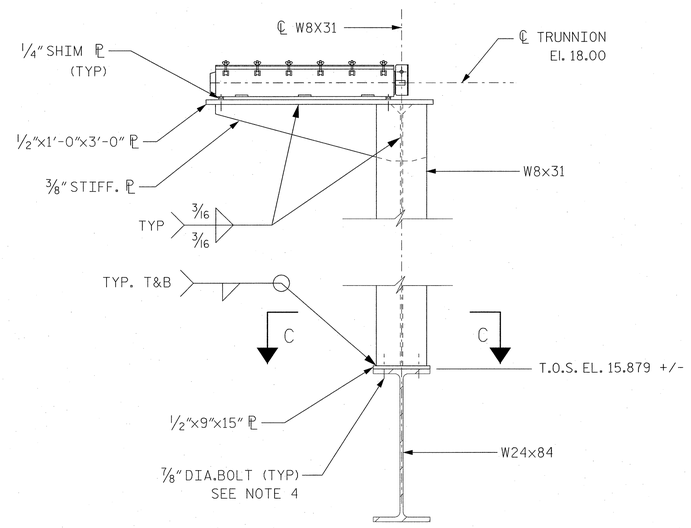

VIEW B-B

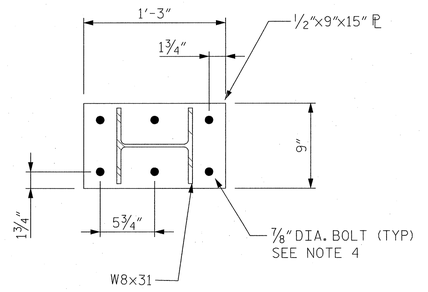

SECTION C-C

NOTES:

1. FOR PAINT AND PROTECTION OF MACHINERY, SEE SPECIAL PROVISIONS.
2. FOR DETAILS OF TRUNNION BEARING SEE DWGS NO. M8 AND M9.
3. LIMIT SWITCH COUPLING SHALL BE JAW-TYPE WITH BOST-BRONZ INSERT. FURNISHED WITH KEYS AND SETSCREWS. MINIMUM TORQUE RATING OF 500 LB-IN.
4. FIELD DRILL 15/16"DIA. HOLES FOR 7/8"DIA. A325 BOLTS IN W24X84 WITH TEMPLATE.
5. DIMENSIONS FOR EXTENSION, LIMIT SWITCH EQUIPMENT, AND SUPPORT ARE PROVIDED FOR BIDDING PURPOSES ONLY. ACTUAL DIMENSIONS MAY VERY DEPENDING ON EQUIPMENT SELECTED. CONTRACTOR TO COORDINATE AND VERIFY DIMENSIONS.

NORTH CAROLINA PROFESSIONAL SEAL 032371 ENGINEER STEVEN K. NG 10/20/06

PROJECT NO. B-2532

CRAVEN COUNTY

STATION: 31+21.29 -L-

STATE OF NORTH CAROLINA
DEPARTMENT OF TRANSPORTATION
RALEIGH, NC

INSTRUMENT DRIVE MACHINERY

HNTB HNTB NORTH CAROLINA, P.C.
343 E. Six Forks Rd., Suite 200, Raleigh, N.C. 27609

DRAWN BY SN DATE 10/06
CHECKED BY EK DATE 10/06
DWG. NO. M14

REVISIONS						SHEET NO.
NO.	BY	DATE	NO.	BY	DATE	S-257
1			3			TOTAL SHEETS
2			4			348

sig_dt W10D10
10/20/2006 15:43
i:\cad\428273 - Alfred Cunningham\D0A1003 - Submission\Mechanical Files\B2532_M10_M14_InstrumentDrive.dgn

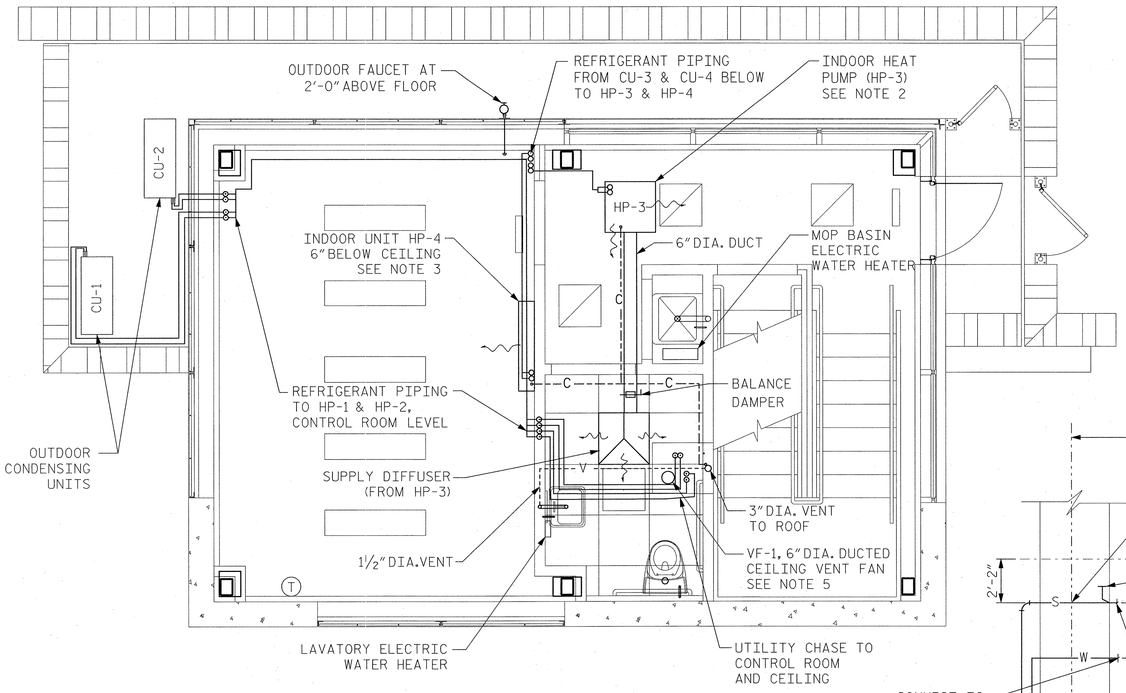

ELECTRICAL ROOM - 2ND FLOOR

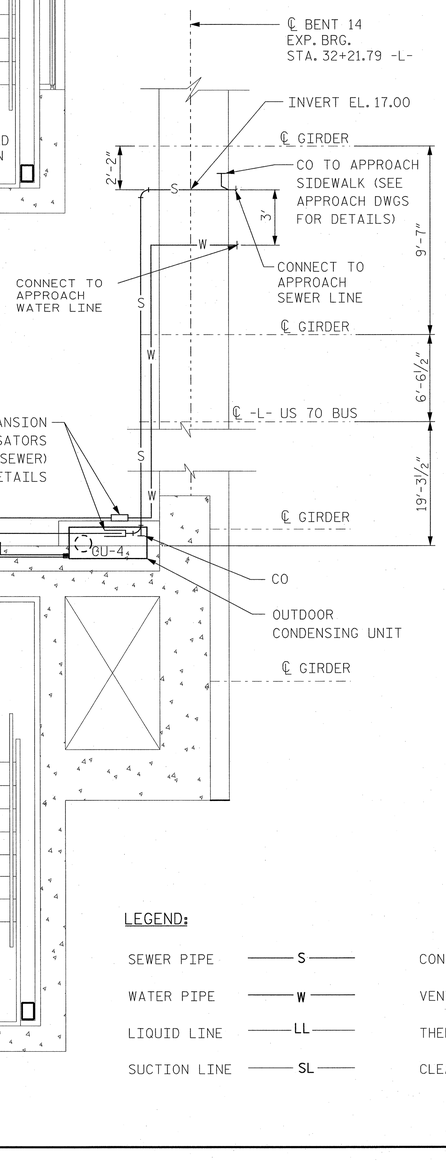

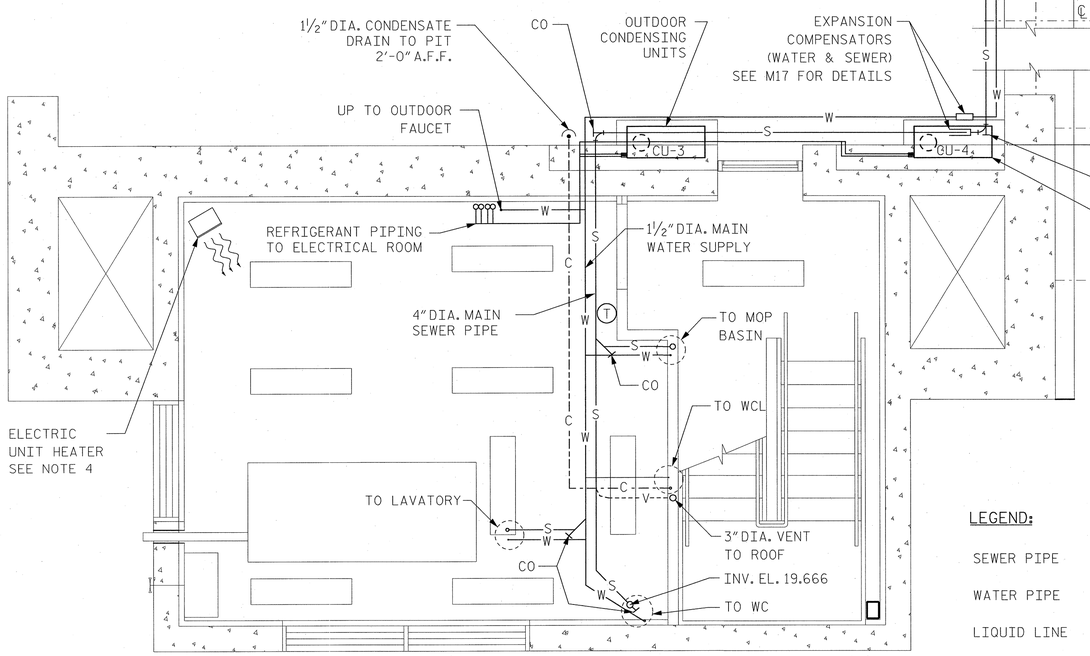

GENERATOR ROOM - 1ST FLOOR

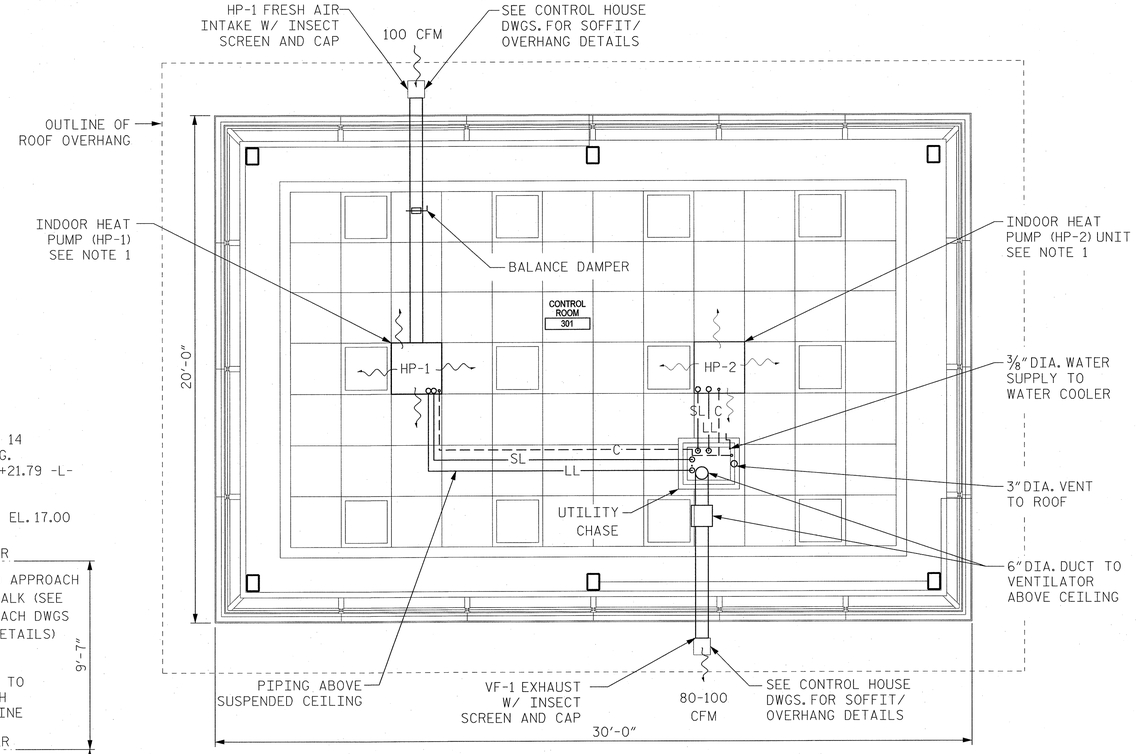

CONTROL ROOM - 3RD FLOOR

NOTES:

1. HP-1 AND HP-2 SHALL BE RECESSED CEILING SPLIT-DUCTLESS HEAT PUMPS, W/ MINIMUM RATING OF 30,000 BTUH / 2.5 TONS, LOCATED IN CONTROL ROOM.
2. HP-3 SHALL BE A RECESSED CEILING SPLIT-DUCTLESS HEAT PUMP, W/ MINIMUM RATING OF 18,000 BTUH / 1.5 TONS, LOCATED IN THE LOBBY. ADJUST TO TWO WAY FLOW.
3. HP-4 SHALL BE A WALL MOUNTED SPLIT-DUCTLESS HEAT PUMP, W/ MINIMUM RATING OF 18,000 BTUH / 1.5 TONS, LOCATED IN ELECTRICAL ROOM.
4. ELECTRIC UNIT HEATER, CEILING MOUNTED, MINIMUM RATING OF 1 TON / 4 kW, LOCATED IN THE GENERATOR ROOM.
5. VF-1 SHALL BE CEILING MOUNTED INLINE VENT FAN, W/ A RATING OF 103 CFM, BROAN MODEL SP140, OR APPROVED EQUAL. SEE SPECIAL PROVISIONS FOR MORE DETAILS.
6. CONTROL ROOM THERMOSTAT FOR HP-1 AND HP-2 (MASTER/SLAVE) SHALL BE LOCATED AS DIRECTED BY THE ENGINEER.
7. ACTUAL DIMENSIONS FOR HVAC UNITS AND CLEARANCES MAY VARY DEPENDING ON EQUIPMENT SELECTED. CONTRACTOR TO COORDINATE AND VERIFY DIMENSIONS.
8. PIPING RUNS ARE SHOWN SCHEMATICALLY, CONTRACTOR TO VERIFY AND COORDINATE WITH STRUCTURAL AND ELECTRICAL TO PREVENT PIPE INTERFERENCE.
9. FOR ELECTRICAL POWER, WIRING, CONDUIT, AND ASSOCIATED HVAC EQUIPMENT, SEE ELECTRICAL DWGS. FOR DETAILS.

LEGEND:

SEWER PIPE	S	CONDENSATE PIPE	C
WATER PIPE	W	VENT PIPE	V
LIQUID LINE	LL	THERMOSTAT	T
SUCTION LINE	SL	CLEANOUT	CO

PROJECT NO. B-2532

CRAVEN **COUNTY**

STATION: 31+21.29 -L-

STATE OF NORTH CAROLINA
DEPARTMENT OF TRANSPORTATION
RALEIGH, NC

CONTROL HOUSE HVAC AND PLUMBING

NORTH CAROLINA PROFESSIONAL ENGINEER SEAL 032371 STEVEN K. NG 10/24/06

HNTB HNTB NORTH CAROLINA, P.C.
343 E. Six Forks Rd., Suite 200, Raleigh, N.C. 27609

DRAWN BY SK DATE 10/06
CHECKED BY SN DATE 10/06
DWG. NO. M15

REVISIONS						SHEET NO.
NO.	BY	DATE	NO.	BY	DATE	S-258
1			3			TOTAL SHEETS
2			4			348

sig AT W10D10
MICRO 06.15
J:\cad\42873 - Alfred Cunningham\DGN 1003\ Submission\Mechanical Final\B2532_MD_M15_CH-HVAC&Plumb.dgn

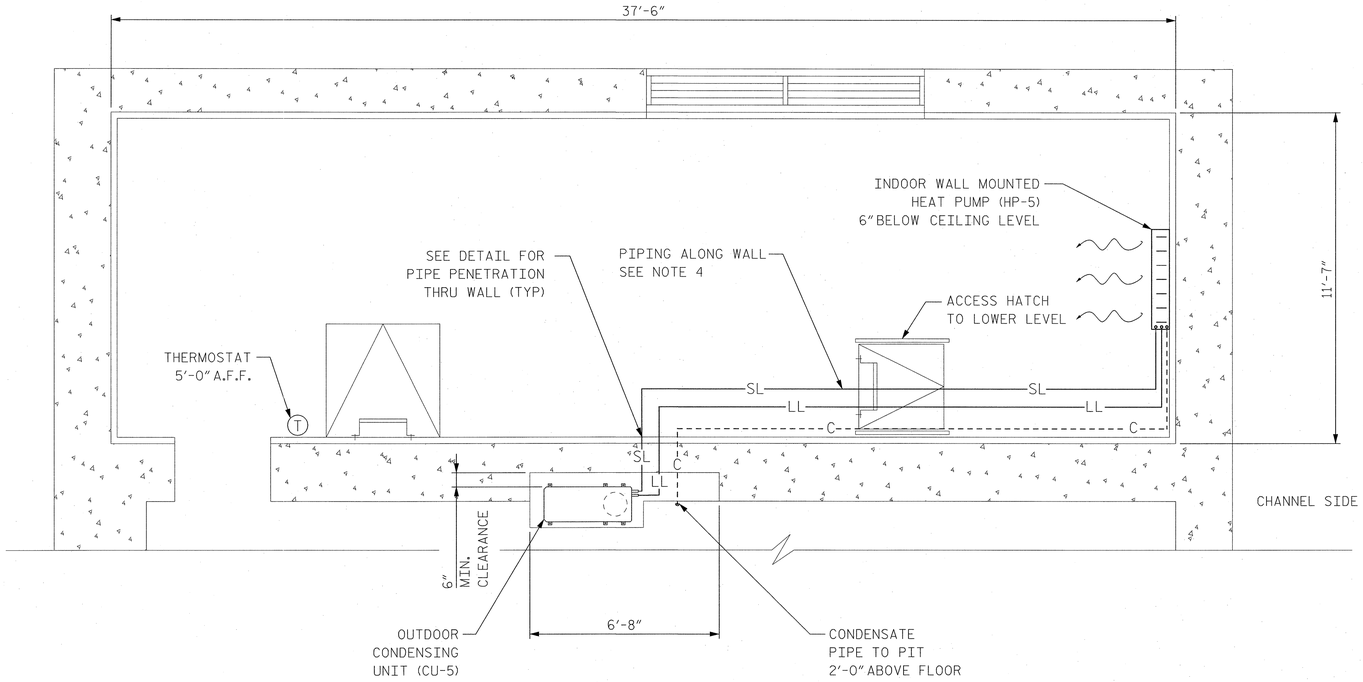

SOUTH ELECTRICAL ROOM - PLAN

BASCULE PIER 13

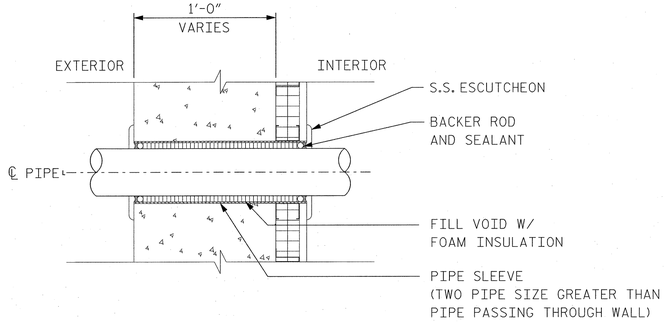

PIPE THRU CONCRETE WALL DETAIL

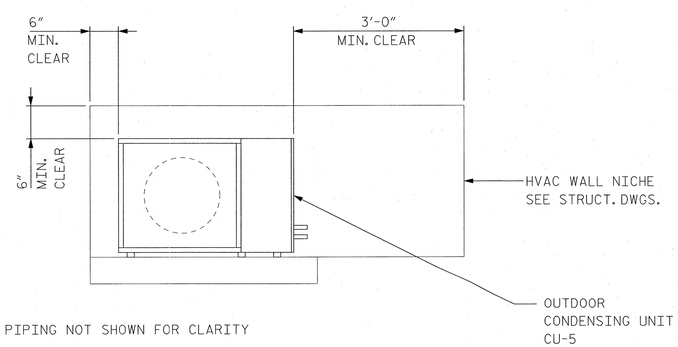

NOTE: PIPING NOT SHOWN FOR CLARITY

VIEW A-A

NOTES:

1. HP-5 SHALL BE A WALL MOUNTED SPLIT-DUCTLESS HEAT PUMP, WITH MIN. RATING OF 33,000 BTUH / 2.75 TONS. SEE SPECIAL PROVISIONS.
2. SEE STRUCTURAL DWGS. NO. B110 AND B111 FOR CU-5 WALL NICHE LOCATION AND DETAILS.
3. ACTUAL DIMENSIONS FOR OUTDOOR UNIT AND CLEARANCES MAY VARY DEPENDING ON EQUIPMENT SELECTED. CONTRACTOR TO COORDINATE AND VERIFY DIMENSIONS.
4. PIPING RUNS ARE SHOWN SCHEMATICALLY. CONTRACTOR TO VERIFY AND COORDINATE WITH ELECTRICAL EQUIPMENT LOCATION TO PREVENT INTERFERENCE.
5. FOR ELECTRICAL POWER, WIRING, CONDUIT, AND ASSOCIATED HVAC EQUIPMENT, SEE ELECTRICAL SPECIAL PROVISIONS AND DWGS. FOR DETAILS.

LEGEND:

SEWER PIPE	—— S ——
WATER PIPE	—— W ——
LIQUID LINE	—— LL ——
SUCTION LINE	—— SL ——
CONDENSATE PIPE	-·-·- C -·-·-
VENT PIPE	------ V ------
THERMOSTAT	(T)

PROJECT NO. B-2532

CRAVEN **COUNTY**

STATION: 31+21.29 -L-

NORTH CAROLINA PROFESSIONAL SEAL 032371 ENGINEER STEVEN K. NG 10/20/06

STATE OF NORTH CAROLINA
DEPARTMENT OF TRANSPORTATION
RALEIGH, NC

SOUTH ELECTRICAL ROOM
HVAC AND DETAILS

HNTB NORTH CAROLINA, P.C.
343 E. Six Forks Rd., Suite 200, Raleigh, N.C. 27609

DRAWN BY SK DATE 10/06
CHECKED BY SN DATE 10/06
DWG. NO. M16

REVISIONS						SHEET NO.
NO.	BY	DATE	NO.	BY	DATE	S-259
1			3			TOTAL SHEETS
2			4			348

sng AT NYOD010
18-OCT-2006 16:53
J:\cadd\42673 - Alfred Cunningham\DGN\100% Submission\Mechanical Final\B2532_MD_M16_SouthElecRmHVAC.dgn

NOTES:

1. FOR ROUTING OF PIPES SEE DRAWING NO. M15.
2. WATER METER LOCATION & INSTALLATION WILL BE AS DIRECTED BY THE ENGINEER. COST IS TO BE INCLUDED IN APPLICATION FOR WATER SERVICE, SEE SPECIFICATIONS.
3. SEE CONTROL HOUSE DRAWINGS FOR VENT DETAILS.
4. CONTRACTOR TO COORDINATE AND VERIFY LOCATION AND CONNECTION TO APPROACH SPAN WATER & SEWER LINES.
5. INSULATION SHALL STOP INSIDE OF THE WALL OF CONTROL HOUSE FOR BOTH PIPES.
6. WATER PIPE INSULATION SHALL CONTINUE THROUGH DIAPHRAGMS WITHOUT INTERRUPTION.
7. FOR DETAILS OF WATER LINE HEAT TRACE SEE ELECTRICAL PLANS AND SPECIAL PROVISIONS.
8. SEE APPROACH SPAN DRAWINGS FOR WATER AND SEWER LINE ON BRIDGE.
9. FOR LOCATION OF SECTION A-A, SEE DWG. M15.

LEGEND:

Ⓜ	WATER METER	HW	HOT WATER
⊥	WALL/SLAB PENETRATION	CW	COLD WATER
⋀	BACK FLOW PREVENTER	VTR	VENT TERMINAL
⋈	BALL VALVE	CO	CLEANOUT
WC	WATER CLOSET	WCL	WATER COOLER
LAV	LAVATORY	IH	INSTANTANEOUS WATER HEATER

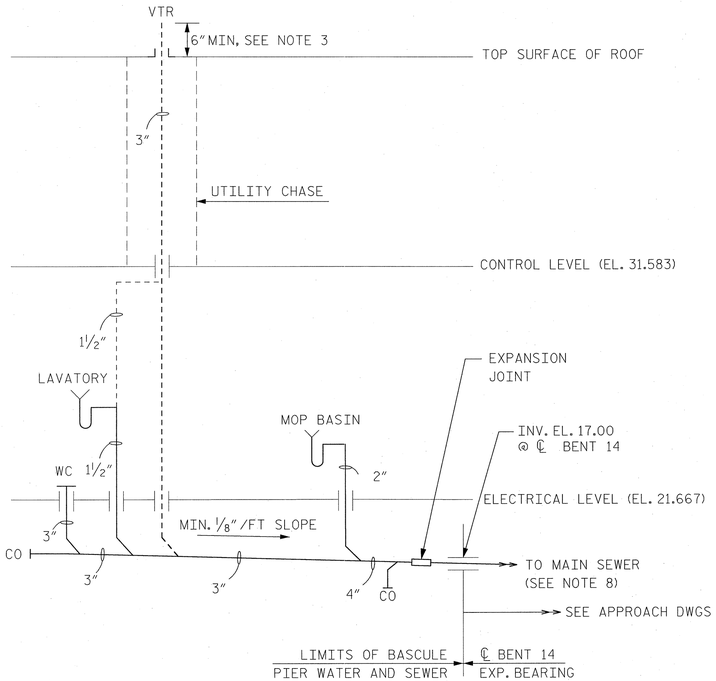

WASTE AND VENT PIPING SCHEMATIC

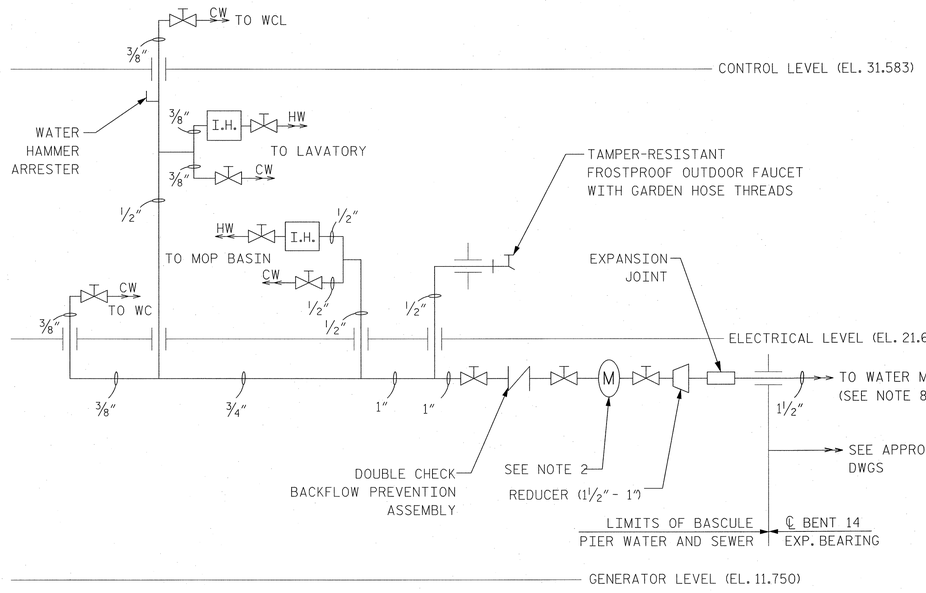

WATER DISTRIBUTION SCHEMATIC

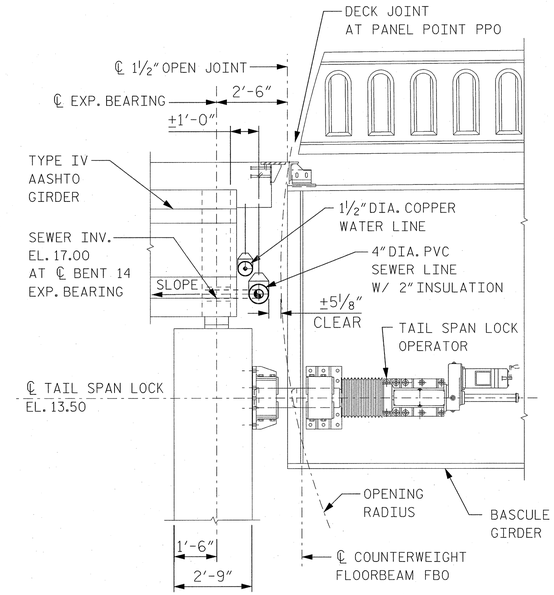

SECTION A-A

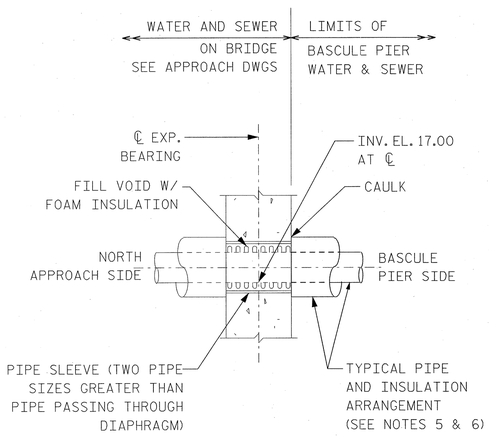

DIAPHRAGM PENETRATION

(SEWER PIPE SHOWN, WATER PIPE SIMILAR)

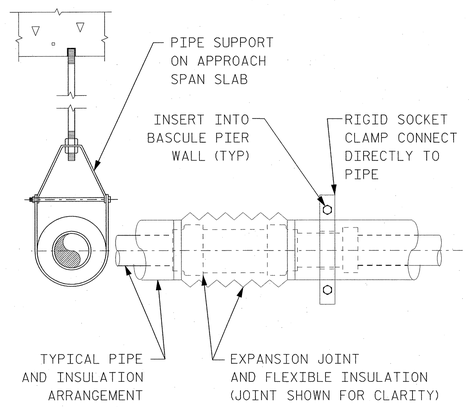

EXPANSION JOINT

(SEWER PIPE SHOWN, WATER PIPE SIMILAR)

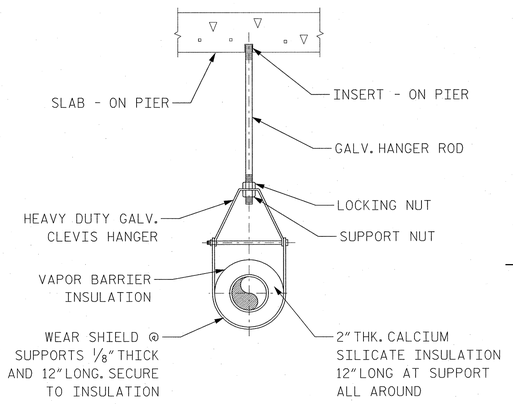

HORIZONTAL PIPE SUPPORT

(SEWER PIPE SHOWN, WATER PIPE SIMILAR)

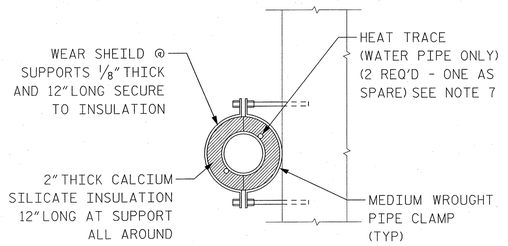

VERTICAL PIPE SUPPORT

(ON PIER ONLY)
(WATER PIPE SHOWN, SEWER PIPE SIMILAR)

SEAL 032371 ENGINEER STEVEN K. NG NORTH CAROLINA PROFESSIONAL 10/20/06

PROJECT NO. B-2532

CRAVEN **COUNTY**

STATION: 31+21.29 -L-

STATE OF NORTH CAROLINA
DEPARTMENT OF TRANSPORTATION
RALEIGH, NC

CONTROL HOUSE PLUMBING SCHEMATIC AND DETAILS

HNTB NORTH CAROLINA, P.C.
343 E. Six Forks Rd., Suite 200, Raleigh, N.C. 27609

DRAWN BY SK DATE 10/06
CHECKED BY SN DATE 10/06

DWG. NO. **M17**

REVISIONS						SHEET NO.
NO.	BY	DATE	NO.	BY	DATE	S-240
1			3			TOTAL SHEETS
2			4			248

sig_FF W10D10
REVISED 20070102
J:\cad\dgn\42873 - Alfred Cumnhgham\DGN\1003_SubmissionMechanical Final\B25132_M0_M17_PlumbingSchematic.dgn

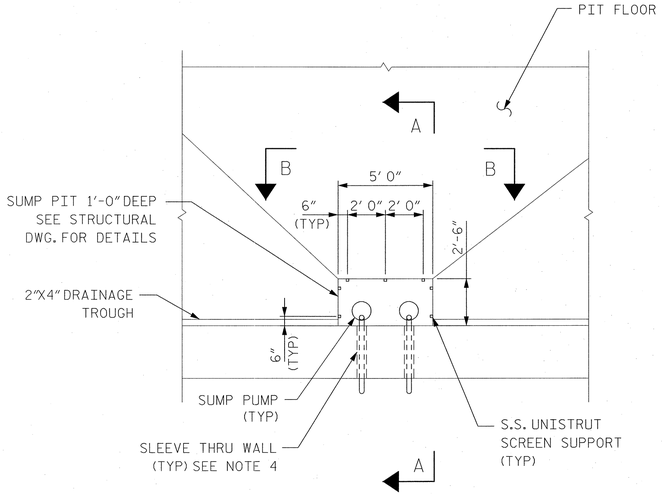

PIT LEVEL PLAN - PIER 13

PIER-14 SIMILAR

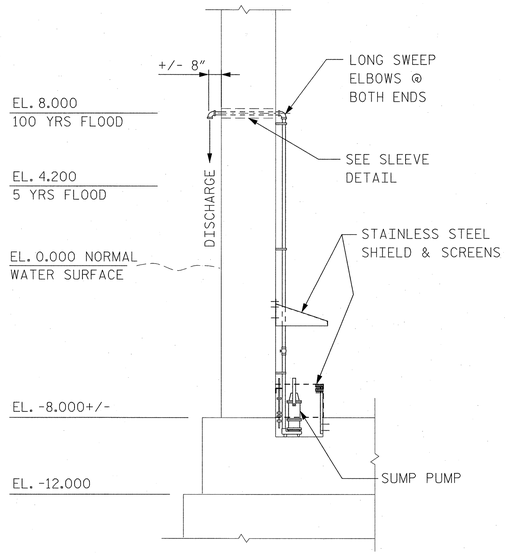

SECTION A-A

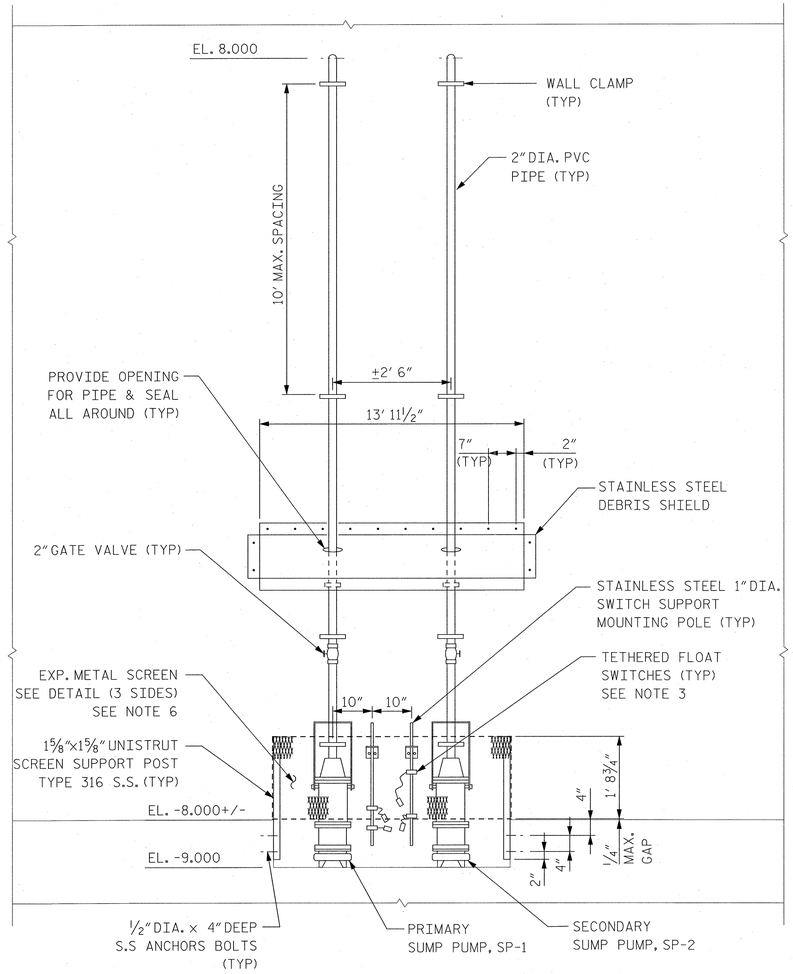

SECTION B-B

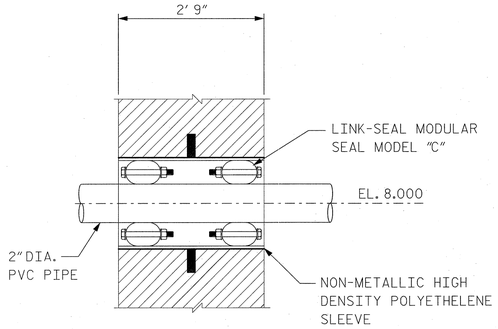

SLEEVE THRU WALL

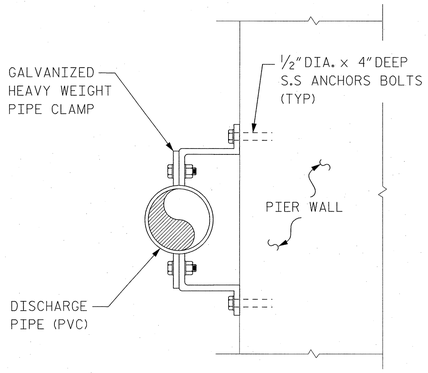

WALL CLAMP DETAIL

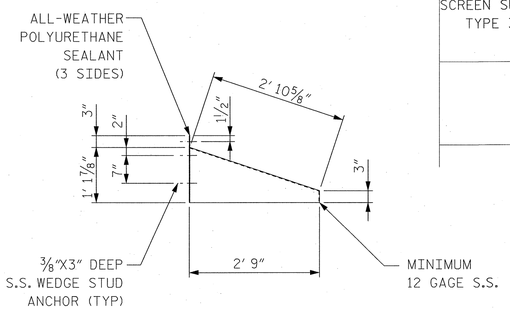

DEBRIS SHIELD DETAIL

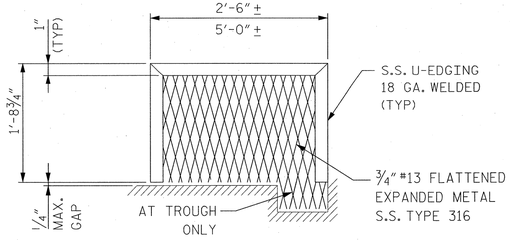

SCREEN DETAIL

SEE NOTE 6

NOTES:

1. BASCULE PIER-13 SHOWN, BASCULE PIER-14 SIMILAR, UNLESS OTHERWISE NOTED.
2. SUMP PUMP SP-1 AND SP-2 SHALL BE RATED FOR 80 GPM WITH MINIMUM HEAD OF 28 FT.
3. FLOAT SWITCH SETTINGS:
   - OFF - 10"
   - PRIMARY ON - 12"
   - SECONDARY ON - 15"
   - HIGH WATER ALARM - 18"
4. CONTRACTOR TO COORDINATE AND VERIFY LOCATION OF PIPE SLEEVES DURING PIER CONSTRUCTION.
5. FOR SUMP PUMP CONTROL AND PANEL LOCATIONS, SEE ELECTRICAL DWGS.
6. S.S. SCREEN TO BE FASTENED TO STRUT CHANNEL POST W/ GALV. ⅜" STRUT CHANNEL STUDS, OVERSIZED WASHER, AND WINGNUTS. MIN. 2 PER POST.

NORTH CAROLINA PROFESSIONAL SEAL 032371 ENGINEER STEVEN K. NG

PROJECT NO. B-2532

CRAVEN **COUNTY**

STATION: 31+21.29 -L-

STATE OF NORTH CAROLINA
DEPARTMENT OF TRANSPORTATION
RALEIGH, NC

SUMP PUMP SYSTEM

HNTB HNTB NORTH CAROLINA, P.C.
343 E. Six Forks Rd., Suite 200, Raleigh, N.C. 27609

DRAWN BY SK DATE 10/06
CHECKED BY SN DATE 10/06
DWG. NO. **M18**

REVISIONS						SHEET NO.
NO.	BY	DATE	NO.	BY	DATE	S-261
1			3			TOTAL SHEETS
2			4			348

sheet_1" W10010
file_name 0006.dgn
JJcadv24573 - Alfred Cunningham/ADSN 100% Submission/Mechanical Floor/B2532_M01_M18_SumpPumpSystem.dgn

DWG. NO.	TITLE
E1	ELECTRICAL DRAWING INDEX
E2	GENERAL ELECTRICAL NOTES
E3	LEGEND AND ABBREVIATIONS
E4	BRIDGE CONTROL SYSTEM BLOCK DIAGRAM
E5	NORTH ONE-LINE DIAGRAM
E6	SOUTH ONE-LINE DIAGRAM
E7	NORTH PANELBOARD SCHEDULE
E8	SOUTH PANELBOARD SCHEDULE
E9	INTERCOM SYSTEM BLOCK DIAGRAM
E10	FIRE ALARM SYSTEM BLOCK DIAGRAM
E11	ROADWAY INTERCOM AND CCTV SYSTEM DETAILS
E12	PLC SYSTEM BLOCK DIAGRAM
E13	ROADWAY ELECTRICAL KEY AND LIGHTING SCHEDULES
E14	ROADWAY ELECTRICAL PLAN 1
E15	ROADWAY ELECTRICAL PLAN 2
E16	ROADWAY ELECTRICAL DETAILS
E17	ROADWAY LIGHTING DETAILS
E18	MESSENGER CABLE DETAILS
E19	SOUTH TRAFFIC SIGNAL DETAILS
E20	NORTH TRAFFIC SIGNAL DETAILS
E21	MISCELLANEOUS TRAFFIC SIGNAL DETAILS
E22	WARNING GATE DETAILS
E23	BARRIER GATE DETAILS
E24	CONTROL HOUSE GENERATOR ROOM EQUIPMENT PLAN
E25	CONTROL HOUSE GENERATOR ROOM SECTIONS AND DETAILS
E26	CONTROL HOUSE ENTRY LEVEL EQUIPMENT PLAN
E27	CONTROL HOUSE CONTROL ROOM EQUIPMENT PLAN
E28	SOUTH ELECTRICAL ROOM EQUIPMENT PLAN
E29	NORTH MACHINERY AREA EQUIPMENT PLAN
E30	MACHINERY AREA EQUIPMENT ELEVATION AND DETAILS 1
E31	MACHINERY AREA EQUIPMENT ELEVATION AND DETAILS 2
E32	MACHINERY AREA EQUIPMENT ELEVATION AND DETAILS 3
E33	BASCULE PIER DETAILS

DWG. NO.	TITLE
E34	BASCULE SPAN EQUIPMENT PLAN AND ELEVATION
E35	LIMIT SWITCH DETAILS
E36	DROOP CABLE INSTALLATION DETAILS
E37	CONTROL HOUSE GENERATOR ROOM ELECTRICAL PLAN
E38	CONTROL HOUSE ENTRY LEVEL ELECTRICAL PLAN
E39	CONTROL HOUSE CONTROL ROOM ELECTRICAL PLAN
E40	SOUTH ELECTRICAL ROOM ELECTRICAL PLAN
E41	ELECTRICAL SERVICE DETAIL
E42	CONDUIT MOUNTING DETAILS
E43	CABLE TRAY DETAILS
E44	HEAT TRACE DETAILS
E45	SUBMARINE CABLE INSTALLATION DETAILS 1
E46	SUBMARINE CABLE INSTALLATION DETAILS 2
E47	LIGHTNING PROTECTION PLAN
E48	LIGHTNING PROTECTION DETAILS
E49	NAVIGATION AID DETAILS 1
E50	NAVIGATION AID DETAILS 2
E51	CONTROL AND ALARM CONSOLE LAYOUTS
E52	CONTROL CONSOLE DETAILS
E53	ALARM CONSOLE DETAILS
E54	ANNUNCIATOR DETAILS
E55	SPEED TIME CURVES
E56	SCHEMATIC LEGEND
E57	SCHEMATIC NO. 1
E58	SCHEMATIC NO. 2
E59	SCHEMATIC NO. 3
E60	SCHEMATIC NO. 4
E61	SCHEMATIC NO. 5
E52	SCHEMATIC NO. 6
E63	SCHEMATIC NO. 7
E64	SCHEMATIC NO. 8
E65	SCHEMATIC NO. 9
E66	SCHEMATIC NO. 10

DWG. NO.	TITLE
E67	SCHEMATIC NO. 11
E68	SCHEMATIC NO. 12
E69	SCHEMATIC NO. 13
E70	SCHEMATIC NO. 14
E71	SCHEMATIC NO. 15
E72	SCHEMATIC NO. 16
E73	SCHEMATIC NO. 17
E74	SCHEMATIC NO. 18
E75	SCHEMATIC NO. 19
E76	SCHEMATIC NO. 20
E77	SCHEMATIC NO. 21
E78	SCHEMATIC NO. 22
E79	SCHEMATIC NO. 23
E80	SCHEMATIC NO. 24
E81	SCHEMATIC NO. 25
E82	SCHEMATIC NO. 26
E83	CABLE SCHEDULE 1
E84	CABLE SCHEDULE 2
E85	CABLE SCHEDULE 3
E86	RACEWAY SCHEDULE 1
E87	RACEWAY SCHEDULE 2

PROJECT NO. B-2532

CRAVEN COUNTY

STATION: 31+21.29 -L-

NORTH CAROLINA PROFESSIONAL SEAL 031843 ENGINEER GREGORY S. BARON

STATE OF NORTH CAROLINA
DEPARTMENT OF TRANSPORTATION
RALEIGH, NC

ELECTRICAL DRAWING INDEX

HNTB HNTB NORTH CAROLINA, P.C.
343 E. Six Forks Rd., Suite 200, Raleigh, N.C. 27609

DRAWN BY WL DATE 10/20/06
CHECKED BY MS DATE 10/20/06

DWG. NO. E-1

REVISIONS						SHEET NO.
NO.	BY	DATE	NO.	BY	DATE	S-262
1			3			TOTAL SHEETS 348
2			4			

jsherman AT FFLD126
19:01:2006 14:00
dgn:\Roadway Files for 100% submittal\B2532_EL_E01_Index of Drgs.dgn

GENERAL NOTES:

1. THESE PLANS ALONG WITH THE ASSOCIATED SPECIAL PROVISIONS, ADDRESS THE FURNISHING, INSTALLATION, AND TESTING OF A COMPLETE BRIDGE ELECTRICAL SYSTEM FOR CONTROL AND OPERATION OF THE BASCULE LEAVES AND ALL CONTROL HOUSE AND PIER ELECTRICAL FACILITIES, INCLUDING ROADWAY LIGHTING, ELECTRIC SERVICE, CABLE TELEVISION SERVICE, TELEPHONE SERVICE, TRAFFIC CONTROL EQUIPMENT, BRIDGE CONTROL EQUIPMENT, COMPLETE. SEE MECHANICAL DRAWINGS FOR DETAILS OF WATER AND SEWER UTILITIES TO THE STRUCTURE WHICH ARE NOT PART OF THE ELECTRICAL WORK.

2. ROADWAY LIGHTING WORK AS DESCRIBED IN THESE PLANS AND SPECIAL PROVISIONS INCLUDES CURRENT WORK WITH PROVISIONS FOR ADDITIONAL POLES AND FIXTURES TO BE INSTALLED IN THE FUTURE. ALL WIRING, JUNCTION BOX AND CONDUIT WORK MUST SUPPORT THE FUTURE INSTALLATIONS. UNUSED CONDUITS AT THE TOPS OF PEDESTALS FOR FUTURE ROADWAY LIGHTING EQUIPMENT SHALL BE CAPPED TO PREVENT WATER AND DEBRIS INFILTRATION.

3. THE CONTRACTOR SHALL COORDINATE THE ELECTRICAL, CABLE TELEVISION AND TELEPHONE SERVICES WITH THE PROSPECTIVE UTILITIES AND THE NCDOT. THE CONTRACTOR SHALL FURNISH AND INSTALL ALL EQUIPMENT REQUIRED TO PROVIDE FULLY FUNCTIONAL UTILITIES AS DESCRIBED IN THESE ELECTRICAL PLANS AND SPECIAL PROVISIONS. UTILITY INSTALLATION DETAILS SHOWN IN THE PLANS ARE PROVIDED FOR REFERENCE AND BIDDING PURPOSES.

4. TRAFFIC SIGNALS ON THE NORTH AND SOUTH APPROACHES SHALL BE CONTROLLED BY THE BRIDGE OPERATOR AS DESCRIBED IN THE SCHEMATIC DIAGRAMS. NO INTERFACE TO OUTSIDE TRAFFIC CONTROLLERS IS REQUIRED.

5. THE CONTRACTOR SHALL VERIFY FIELD CONDITIONS AND COORDINATE THE INSTALLATION OF TRAFFIC CONTROL EQUIPMENT, INCLUDING SIGNALS AND GATES, WITH THE STRUCTURAL WORK SO AS TO ASSURE PROPER PLACEMENT OF ANCHOR BOLTS AND PROPER CLEARANCES BETWEEN ELECTRICAL EQUIPMENT AND STRUCTURAL ELEMENTS. PLACEMENT OF MOVING EQUIPMENT SHALL BE DONE WITH CONSIDERATION TO PREVENTING ANY OBSTRUCTIONS TO OPERATION OF THIS EQUIPMENT.

6. THE DESIGN WORK WAS COORDINATED AMONG THE VARIOUS ENGINEERING DISCIPLINES TO PROVIDE APPROPRIATE OPENINGS FOR THE ENTRY OF EQUIPMENT INTO THE CONTROL HOUSE AND PIER AREAS. THE CONTRACTOR SHALL COORDINATE THE PROCUREMENT AND INSTALLATION OF ELECTRICAL EQUIPMENT WITH THE STRUCTURAL, MECHANICAL AND ARCHITECTURAL WORK SO AS TO ASSURE ADEQUATE ENTRY CLEARANCES FOR BRINGING ELECTRICAL EQUIPMENT INTO FINAL INSTALLATION LOCATIONS. THE CONTROL HOUSE EXHAUST LOUVER OPENING SHALL ACCOMMODATE THE ENTRY OF THE EMERGENCY GENERATOR.

7. THE ELECTRICAL EQUIPMENT AND ALL INSTALLATIONS SHALL BE IN ACCORDANCE WITH REGULATIONS OF THE LATEST UL, BOCA, AND NFPA CODES. ALL ELECTRICAL INSTALLATIONS SHALL CONFORM TO THE 2005 NATIONAL ELECTRIC CODE OR LATER.

8. THE ELECTRICAL WORK DESCRIBED IN THESE PLANS SHALL BE COORDINATED, AS REQUIRED, WITH THE WORK OF ALL OTHER DISCIPLINES, SO THAT ALL INSTALLATIONS ARE PROPERLY STAGED AND SHALL OPERATE AS DESIGNED.

9. THE CONTRACT DRAWINGS ARE DIAGRAMMATIC IN NATURE, SIZES OF EQUIPMENT ARE SOMETIMES APPROXIMATE, DEPENDING ON MANUFACTURER SELECTED AND NOT EVERY DETAIL OR EXACT LOCATION OF EQUIPMENT AND/OR CONDUIT MAY BE SHOWN. FINAL PHYSICAL CONDITIONS SHALL BE VERIFIED IN THE FIELD. THE CONTRACTOR SHALL SUBMIT TO THE ENGINEER FOR APPROVAL ANY DEVIATIONS IN PROPOSED CABLE AND RACEWAY ROUTINGS PRIOR TO INSTALLATION.

10. ALL MATERIALS AND EQUIPMENT FURNISHED UNDER THIS CONTRACT SHALL BE NEW AND, TO THE EXTENT POSSIBLE, STANDARD PRODUCTS OF THE VARIOUS MANUFACTURERS. WHERE MORE THAN ONE OF ANY SPECIFIC ITEM IS REQUIRED, ALL SHALL BE OF THE SAME TYPE AND MANUFACTURER, UNLESS OTHERWISE NOTED IN THE PLANS OR SPECIFICATIONS. ITEMS OF EQUIPMENT OR MATERIAL WHICH ARE NOT SPECIFICALLY DEFINED SHALL CONFORM TO THE GENERAL STANDARD OF QUALITY ESTABLISHED HEREIN.

11 ALL ELECTRICAL EQUIPMENT SHALL BE INSTALLED IN THE LOCATIONS DEPICTED ON THE PLANS. SLIGHT DEVIATION IN LOCATION SHALL BE PERMITTED UPON APPROVAL OF THE ENGINEER PRIOR TO INSTALLATION.

12. THE CONTRACTOR SHALL VERIFY ALL DIMENSIONS RELATING TO ELECTRICAL EQUIPMENT INSTALLATION PRIOR TO PERFORMING THE ACTUAL INSTALLATION. ANY DEVIATIONS NOTED AS PART OF THE FIELD VERIFICATION OR CONSTRUCTION DEVIATIONS REGARDING THE STRUCTURE, SHALL IMMEDIATELY BE BROUGHT TO THE ATTENTION OF THE ENGINEER.

13. ALL STRUCTURAL, MECHANICAL, AND ARCHITECTURAL INFORMATION SHOWN IN THE ELECTRICAL PLANS IS FOR REFERENCE ONLY. THE CONTRACTOR IS DIRECTED TO REFER TO THE STRUCTURAL, MECHANICAL OR ARCHITECTURAL PLANS FOR ALL PROPER DIMENSIONING AND STRUCTURAL DETAILS.

14. ALL CONDUCTORS / CABLES MOUNTED TO THE APPROACH SPANS ARE TO BE ROUTED BY MEANS OF A MESSENGER CABLE SYSTEM. CONDUITS SHALL BE USED AS SHOWN IN THE PLANS ONLY FOR SITUATIONS WHERE SECTIONS OF WIRING ARE RUN THROUGH THE PIERS AND/OR CONTROL HOUSE. SHORT SECTIONS OF CONDUIT SHALL BE USED AS SHOWN IN THE PLAN DETAILS TO ROUTE CABLING FOR ELECTRICAL EQUIPMENT ON THE APPROACHES BETWEEN THE EQUIPMENT AND THE MESSENGER CABLE SYSTEM. JUNCTION BOXES SHALL BE USED AS SHOWN FOR CONNECTIONS BETWEEN THE EQUIPMENT AND THE MESSENGER CABLE SYSTEM.

15. STAINLESS STEEL CONCRETE INSERTS SHALL BE INSTALLED TO ACCOMMODATE THE EYEBOLTS FOR THE MESSENGER CABLES ON THE APPROACH SPANS. THESE INSERTS SHALL BE SUPPLIED BY THE ELECTRICAL CONTRACTOR AND INSTALLED BY THE STRUCTURAL CONTRACTOR. THE ELECTRICAL CONTRACTOR SHALL COORDINATE THIS EFFORT WITH THE STRUCTURAL CONTRACTOR. THE INSERTS SHALL BE CAST INTO NEW CONCRETE. EYEBOLTS SHALL BE ATTACHED TO THE INSERTS. ROUTE THE TELEPHONE AND CABLE TELEVISION CABLES ALONG THE APPROACH SPANS BY MEANS OF A MESSENGER CABLE WHICH IS SEPARATE FROM THE MESSENGER CABLE USED FOR POWER AND CONTROL CIRCUITS.

16. ALL ELECTRICAL CONDUITS USED IN THE PIERS AND NON-HEATED SPACES SHALL BE FIBERGLASS REINFORCED EPOXY CONDUITS AS DESCRIBED IN THE SPECIFICATIONS. CONNECTIONS OF FIBERGLASS CONDUIT TO BOXES OR ENCLOSURES SHALL BE DONE WITH FIBERGLASS BOX CONNECTORS. WIREWAYS WHERE SHOWN IN THE PLANS SHALL BE NEMA 4X STAINLESS STEEL. NO PVC OR PVC COATED CONDUITS SHALL BE USED. GALVANIZED RIGID STEEL CONDUITS SHALL BE USED INSIDE THE CONTROL HOUSE WHERE SHOWN (SUCH AS FOR TRANSITIONS FROM THE MCC'S TO CABLE TRAYS). ALL CONDUITS AND FITTINGS USED IN ANY SINGLE CONTINUOUS CONDUIT RUN SHALL BE THE PRODUCT OF A SINGLE MANUFACTURER.

17. CONDUIT PENETRATIONS THROUGH WALLS AND FLOORS OF BUILDINGS SHALL BE SEALED WITH AN APPROVED FIRE-STOP SEALANT.

18. THE CONTRACTOR SHALL SUBMIT TO THE ENGINEER A PLAN FOR APPROVAL SHOWING THE PRECISE LOCATION AND SIZE OF THE REQUIRED CORE DRILL PENETRATIONS FOR CORE DRILLING WHERE SHOWN ON THE PLANS. CAUTION SHALL BE EXERCISED SO AS TO AVOID CUTTING STEEL REINFORCEMENT BARS WITHIN EXISTING CONCRETE. WHEREVER POSSIBLE, COORDINATE THE ELECTRICAL PENETRATIONS WITH THE STRUCTURAL WORK SO THAT SLEEVES MAY BE CAST INTO THE CONCRETE TO ELIMINATE DRILLING.

19. ALL ELECTRICAL RACEWAYS SHOWN THROUGHOUT THE PLANS ARE DESIGNATED WITH AN "R" PREFIX TO FACILITATE CROSS REFERENCE BETWEEN THE PLANS AND THE RACEWAY SCHEDULES. THE CONTRACTOR SHALL FOLLOW THE NUMBERING CONVENTION SHOWN WITHIN THE PLANS. ADDITIONAL RACEWAYS ADDED SHALL CONTINUE THE *R* NUMBERING FROM THE LAST NUMBER SHOWN IN THE PLANS SO AS TO BE A CONTINUATION OF THE NUMBERING SHOWN IN THE PLANS. THE CONTRACTOR MAY SUBSTITUTE AN ALTERNATE NUMBERING SCHEME ONLY WITH PRIOR APPROVAL FROM THE ENGINEER.

20. THE CONTRACTOR SHALL FURNISH AND INSTALL ENGRAVED BRASS TAGS AT BOTH ENDS OF ALL RACEWAY RUNS IDENTIFYING THEM WITH FINAL CONDUIT DESIGNATIONS WHICH SHALL COINCIDE WITH THOSE IN THE CONTRACTOR'S FINAL AS-BUILT DRAWINGS. PAYMENT FOR THESE TAGS SHALL BE INCLUDED UNDER THE VARIOUS PAY ITEMS TO WHICH THE RACEWAY PERTAINS. FOR INFORMATION REGARDING RACEWAYS AND CIRCUITS THEREIN, REFER TO THE CABLE AND RACEWAY SCHEDULES. THE RACEWAYS IDENTIFIED IN THE PLANS ARE PRIMARILY THOSE FOR BRIDGE CONTROL SYSTEM WIRING. THE CONTRACTOR SHALL FURNISH AND INSTALL ALL RACEWAYS TO SUPPORT ALL DESCRIBED SYSTEMS INCLUDING HVAC AND LIGHTING AS WELL AS TELEPHONE, CABLE TELEVISION, FIRE ALARM, CCTV, AND INTERCOM. THE CONTRACTOR SHALL PROVIDE ADEQUATE RACEWAY SPACE SO AS TO LIMIT RACEWAY FILL TO THE LIMITS ESTABLISHED IN THE CURRENT EDITION OF THE NATIONAL ELECTRICAL CODE.

21. THE CABLE SCHEDULES DEFINE THE PRIMARY WIRING TYPE FOR ROUTING THROUGH THE CONTROL HOUSE AND PIERS. THIS WIRING SHALL TRANSITION TO OTHER CABLE TYPES IN SPECIFIC LOCATIONS. THE CIRCUITS FEEDING INTO THE MESSENGER CABLE SYSTEM SHALL TRANSITION FROM THE CABLE TYPE DEFINED IN THE SCHEDULES TO SOW-A CABLE (TYPE F AS DESCRIBED IN THE ELECTRICAL SPECIAL PROVISIONS) AT THE FIELD WIRING TERMINAL CABINETS (ITEM# 13 AS SHOWN IN THE BLOCK DIAGRAM). CIRCUITS FEEDING THE MOVABLE LEAVES SHALL TRANSITION TO TYPE C CABLE (AS DESCRIBED IN THE ELECTRICAL SPECIAL PROVISIONS) BETWEEN THE STATIONARY AND MOVABLE DROOP CABLE BOXES. WIRING TO THE FENDER NAVIGATION LIGHTS SHALL TRANSITION TO SOW-A CABLE (TYPE F AS DESCRIBED IN THE ELECTRICAL SPECIAL PROVISIONS) BETWEEN THE PIER AND THE FENDER.

22. THE CONTRACTOR SHALL COORDINATE HIS PROCUREMENT OF THE SUBMARINE CABLES WITH ANY CHANGES MADE BY THE CONTROL SYSTEM VENDOR SO AS TO ASSURE ADEQUATE CONDUCTORS OF EACH TYPE REQUIRED IN THE SUBMARINE CABLES. THE SUBMARINE CABLE CONDUCTOR COUNT SHALL INCLUDE 30% SPARE CONDUCTORS.

23. ALL ELECTRICAL RACEWAYS SHOWN IN PLAN VIEW THROUGHOUT THESE DRAWINGS ARE DIAGRAMMATIC AND ARE INTENDED TO SHOW A CONCEPTUAL LAYOUT. THE CONTRACTOR SHALL FOLLOW THESE LAYOUTS AS CLOSELY AS POSSIBLE, REALIZING THAT ACTUAL INSTALLATIONS MAY VARY SLIGHTLY DUE TO FIELD CONDITIONS AND STRUCTURAL AND MECHANICAL COORDINATION.

24. THE ELECTRICAL SCHEMATICS ARE INTENDED TO SHOW THE BRIDGE CONTROL SYSTEM OPERATION ONLY. EXCLUDED ARE CONTROL HOUSE AND PIER RELATED ELECTRICAL FACILITIES SUCH AS RECEPTACLES, HVAC, COMMUNICATIONS AND LIGHTING. BRIDGE CONTROL CIRCUITRY ON THESE SCHEMATICS INCLUDES ALL TRAFFIC SIGNAL OPERATION, GATES, LOCKS, NAVIGATIONAL LIGHTING AND SPAN CONTROL. THE CONTRACTOR SHALL FOLLOW THESE SCHEMATICS AS CLOSELY AS POSSIBLE. ANY DEVIATION FROM THESE SCHEMATICS IN TERMS OF CONTROL LOGIC AND HARDWIRING ARRANGEMENTS SHALL BE SUBMITTED TO THE ENGINEER, IN COMPLETE DETAIL FOR APPROVAL, PRIOR TO CONSTRUCTION.

25. CABLE NUMBERING AS SHOWN ON THE SCHEMATICS IS PROVIDED FOR CROSS REFERENCE BETWEEN SCHEMATICS AND CABLE SCHEDULES. THE CONTROL SYSTEM VENDOR MAY SUBSTITUTE AN ALTERNATE NUMBERING SCHEME WITH PRIOR APPROVAL FROM THE ENGINEER.

26. ANY APPARATUS, DEVICE, CIRCUIT, APPLIANCE, MATERIAL, OR LABOR NOT HEREIN SPECIFICALLY MENTIONED OR INCLUDED, BUT THAT MAY BE FOUND NECESSARY TO COMPLETE OR PERFECT THE INSTALLATION AND EQUIPMENT IN A MANNER ACCEPTABLE TO THE ENGINEER, SHALL BE FURNISHED AND INSTALLED BY THE CONTRACTOR AS IF SPECIFICALLY INCLUDED IN THESE PLANS, AND WITHOUT ADDITIONAL COST TO NCDOT.

PROJECT NO. B-2532
CRAVEN COUNTY
STATION: 31+21.29 -L-

NORTH CAROLINA PROFESSIONAL ENGINEER SEAL 031843 GREGORY S. BARON

STATE OF NORTH CAROLINA
DEPARTMENT OF TRANSPORTATION
RALEIGH, NC

GENERAL NOTES

HNTB
HNTB NORTH CAROLINA, P.C.
343 E. Six Forks Rd., Suite 200, Raleigh, N.C. 27609

DRAWN BY WL DATE 9/26/06
CHECKED BY FS DATE 9/26/06
DWG. NO. E-2

REVISIONS					
NO.	BY	DATE	NO.	BY	DATE
1			3		
2			4		

SHEET NO. S-263
TOTAL SHEETS 348

fgalrosleya AT FFLD103
03-OCT-2006 13:43
U:\FF42673e1\Working Files for 100% submittal\B2532_EL_E02_Site Plan.dgn

BRIDGE EQUIPMENT

ID #	EQUIPMENT
1	AIR HORN AND COMPRESSOR
2	ALARM CONSOLE
3	AUTOMATIC TRANSFER SWITCH
4	AUXILIARY MOTOR CLUTCH
5	AUXILIARY SPAN MOTOR
6	BARRIER GATE
7	BRIDGE CONTROL PANEL (BCP)
8	CAM LIMIT SWITCH / RESOLVER
9	CLUTCH RECTIFIER
10	CONTROL CONSOLE
11	DROOP CABLE TERMINAL BOX
12	FENDER NAVIGATION LIGHT
13	FIELD WIRING TERMINAL CABINET
14	FULLY CLOSED LIMIT SWITCH
15	HEEL LOCK (TAIL LOCK)
16	IN SIGHT DISCONNECT SWITCH
17	MACHINERY BRAKE
18	MAIN DISCONNECT SWITCH
19	MAIN SPAN MOTOR
20	MOTOR BRAKE
21	CHANNEL NAVIGATION LIGHT
22	NORTH MOTOR CONTROL CENTER (MCC)
23	NORTH LIGHTING PANEL (NLP)
24	NORTH LIGHTING TRANSFORMER (NTX-LP)
25	NORTH POWER PANEL (NPP)
26	NORTH POWER TRANSFORMER (NTX-P)
27	PHOTOCELL
28	ROADWAY LIGHTING STANDARD
29	SOUTH LIGHTING PANEL (SLP)
30	SOUTH LIGHTING TRANSFORMER (STX-LP)
31	SOUTH MOTOR CONTROL CENTER (MCC)
32	SOUTH POWER PANEL (SPP)
33	SOUTH POWER TRANSFORMER (STX-P)
34	SPAN DRIVE CABINET
35	SPAN DRIVE ISOLATION TRANSFORMER
36	STANDBY GENERATOR
37	SUBMARINE CABLE TERMINAL BOX
38	SUMP PUMP
39	SUMP PUMP CONTROLLER
40	TACHOMETER / OVERSPEED SWITCH
41	TELEPHONE SERVICE EQUIPMENT (NETWORK INTERFACE BOX)
42	TOE LOCK
43	WARNING GATE
44	TRAFFIC LIGHT
45	UTILITY TRANSFORMER
46	DRAWBRIDGE AHEAD SIGN
47	ELECTRIC SERVICE EQUIPMENT
48	CABLE TELEVISION INERFACE BOX

MCC LEGEND

NORTH COMPARTMENT

1N	MAIN MCC CIRCUIT BREAKER
2N	METERING
3N	SOUTH MCC POWER
4N	SURGE SUPPRESSOR
5N	POWER PANEL
6N	BREAKER FOR POWER PANEL TRANSFORMER
7N	TRANSFORMER
8N	LIGHTING PANEL POWER
9N	SUMP PUMP
10N	SPACE
11N	SPACE
12N	NORTH WEST HEEL LOCK BREAKER AND STARTER
13N	NORTH EAST HEEL LOCK BREAKER AND STARTER
14N	NORTH WEST TOE LOCK BREAKER AND STARTER
15N	NORTH EAST TOE LOCK BREAKER AND STARTER
16N	ONCOMING TRAFFIC GATE BREAKER AND STARTER
17N	OFFGOING TRAFFIC GATE BREAKER AND STARTER
18N	ONCOMING BARRIER GATE BREAKER AND STARTER
19N	OFFGOING BARRIER GATE BREAKER AND STARTER
20N	SPAN DRIVE BREAKER
21N	AUX. SPAN DRIVE BREAKER
22N	MOTOR BRAKE
23N	WEST MACHINERY BRAKE
24N	EAST MACHINERY BRAKE

SOUTH COMPARTMENT

1S	MAIN MCC CIRCUIT BREAKER
2S	SPACE
3S	SURGE SUPPRESSOR
4S	POWER PANEL
5S	BREAKER FOR POWER PANEL TRANSFORMER
6S	TRANSFORMER
7S	LIGHTING PANEL POWER
8S	SUMP PUMP
9S	SPACE
10S	SPACE
11S	SOUTH WEST HEEL LOCK BREAKER AND STARTER
12S	SOUTH EAST HEEL LOCK BREAKER AND STARTER
13S	ONCOMING TRAFFIC GATE BREAKER AND STARTER
14S	OFFGOING TRAFFIC GATE BREAKER AND STARTER
15S	ONCOMING BARRIER GATE BREAKER AND STARTER
16S	OFFGOING BARRIER GATE BREAKER AND STARTER
17S	SPAN DRIVE BREAKER
18S	AUX. SPAN DRIVE BREAKER
19S	MOTOR BRAKE
20S	WEST MACHINERY BRAKE
21S	EAST MACHINERY BRAKE

EQUIPMENT ABBREVIATIONS
(USED PRIMARILY IN SCHEMATICS)

AM	AMMETER
ATS	AUTOMATIC TRANSFER SWITCH
AUX	AUXILIARY
BARR	BARRIER
BCP	BRIDGE CONTROL PANELBOARD
CAP	CAPACITOR
CBL	CABLE
CLS	CAM LIMIT SWITCH
CR	CONTROL RELAY
CB	CIRCUIT BREAKER
DRVN	DRIVEN
DS	DISCONNECT SWITCH
DV	MISCELLANEOUS DEVICE
FCLS	FULLY CLOSED LIMIT SWITCH
GLS	BARRIER GATE LIMIT SWITCH
HDLS	HEEL LOCK DRIVEN LIMIT SWITCH
HPLS	HEEL LOCK PULLED LIMIT SWITCH
LBLS	BARRIER GATE LOCKBAR LIMIT SWITCH
LR	LATCHING RELAY
LS	LIMIT SWITCH
LT	PILOT LIGHT
LWRD	LOWERED
M	CONTACTOR
MACH	MACHINERY
MCC	MOTOR CONTROL CENTER
MRLS	BRAKE MANUAL RELEASE LIMIT SWITCH
MT	METER
NEHL	NORTHEAST HEEL LOCK
NLP	NORTH LIGHTING PANELBOARD
NPP	NORTH POWER PANELBOARD
NTL	NORTH TOE LOCK
NWHL	NORTHWEST HEEL LOCK
OFG	OFFGOING
OL	OVERLOAD RELAY
ONC	ONCOMING
OVERSPD	OVERSPEED
PB	PUSHBUTTON
PBLT	ILLUMINATED PUSHBUTTON
PH	PHASE
PLLD	PULLED
PWR	POWER
RECPT	RECEPTACLE
RLS	BRAKE RELEASED LIMIT SWITCH
RS	RAISE
RSD	RAISED
SEHL	SOUTHEAST HEEL LOCK
SLP	SOUTH LIGHTING PANELBOARD
SLS	BRAKE SET LIMIT SWITCH
SPP	SOUTH POWER PANELBOARD
SS	SELECTOR SWITCH
STL	SOUTH TOE LOCK
SWHL	SOUTHWEST HEEL LOCK
TAS	THERMOSTATIC SWITCH
TDLS	TOE LOCK DRIVEN LIMIT SWITCH
TG	TOGGLE SWITCH
TLLS	TOE LOCK LIMIT SWITCH
TLS	TRAFFIC GATE LIMIT SWITCH
TPLS	TPLS TOE LOCK PULLED LIMIT SWITCH
UV	UNDERVOLTAGE
WARN	WARNING
XF	TRANSFORMER

GENERAL ABBREVIATIONS

CCTV	CLOSED CIRCUIT TELEVISION
CPU	CENTRAL ROCESSING UNIT
E	EAST
FRE	FIBERGLASS REINFORCED CONDUIT
GRS	GALVANIZED RIGID STEEL CONDUIT
HVAC	HEATING, VENITLATING AND AIR CONDITIONING
I.D.	INNER DIAMETER
I/O	INPUT / OUTPUT
LT	LIGHT
MISC.	MISCELLANEOUS
N	NORTH
NE	NORTHEAST
NW	NORTHWEST
O.C.	ON CENTER
O.D.	OUTER DIAMETER
PH	PHOTOCELL
S	SOUTH
SS	STAINLESS STEEL
SE	SOUTHEAST
SW	SOUTHWEST
TYP.	TYPICAL
W	WEST
DBA	DRAWBRIDGE AHEAD SIGN
SR	SURGE SUPPRESSOR
MAX	MAXIMUM
DWG	DRAWING(S)
CAT	CATALOG
MH	METAL HALIDE
TYP	TYPICAL

NORTH CAROLINA PROFESSIONAL SEAL 031843 ENGINEER GREGORY S. BARON

PROJECT NO. B-2532

CRAVEN COUNTY

STATION: 31+21.29 -L-

STATE OF NORTH CAROLINA
DEPARTMENT OF TRANSPORTATION
RALEIGH, NC

LEGEND AND ABBREVIATIONS

HNTB HNTB NORTH CAROLINA, P.C.
343 E. Six Forks Rd., Suite 200, Raleigh, N.C. 27609

DRAWN BY FG DATE 9/26/06
CHECKED BY MAW DATE 9/26/06

DWG. NO. E-3

REVISIONS						SHEET NO.
NO.	BY	DATE	NO.	BY	DATE	S-264
1			3			TOTAL SHEETS
2			4			348

fontdesign KT FTLD103
10/26/2006 15:44
U:\FF4597\e\Working Files for 100% submittal\B2532_EL_E03_hdeudgn

CABLE TRAY T2

DROOP CABLE

SUBMARINE CABLES

3"CONDUITS AS NECESSARY

SOUTH ELECTRICAL ROOM

SOUTH PIER

SOUTH BASCULE LEAF

NORTH BASCULE LEAF

NORTH PIER

CONTROL HOUSE GENERATOR ROOM

CONTROL HOUSE ENTRY LEVEL

CONTROL HOUSE CONTROL ROOM

24"x12" OPENING BETWEEN FLOORS

TO CONTROL HOUSE LIGHTING AND RECEPTACLES (NOT SHOWN)

3" CONDUITS AS NEEDED (TYP.)

CABLE TRAY T1

TO ROADWAY LIGHTING

SOUTH APPROACH SPANS

NORTH APPROACH SPANS

TELEPHONE/CABLE SERVICES

PROPOSED UTILITY POLE (BY UTILITY COMPANY)

PAD MOUNTED UTILITY TRANSFORMER (BY UTILITY COMPANY) (SEE DWG. NO. E-41 FOR DETAIL) (PAD BY CONTRACTOR)

SERVICE DISCONNECT, CT CABINET AND METER PAN (BY CONTRACTOR) METER AND CURRENT TRANSFORMERS (BY UTILITY) (SEE DWG. NO. E-41 FOR DETAILS)

480/277V, 3Ø, 4-WIRE INCOMING SERVICE

NOTES:

1. FOR INFORMATION REGARDING COMMUNICATIONS FOR CCTV, AND FIRE ALARM SHOWN ON SYSTEM BLOCK DIAGRAMS, SEE SHEETS E-10 AND E-11. FOR ADDITIONAL INTERCOM INFORMATION, SEE INTERCOM SYSTEM BLOCK DIAGRAM, SHEET E-9.

2. FOR LEGEND AND ABBREVIATIONS, SEE SHEET E-3.

3. ONLY BRIDGE CONTROL SYSTEM AND INCOMING POWER DISTRIBUTION RACEWAYS ARE SHOWN. ONLY WIRING ASSOCIATED WITH THESE SYSTEMS SHALL BE INSTALLED IN THESE RACEWAYS SHOWN ON THIS SHEET AND ELSEWHERE ON THE PLANS. WIRING FOR CCTV, FIRE ALARM, GENERAL LIGHTING, HVAC, INTERCOM, CABLE, TELCO, AND OTHER MISC. SYSTEMS SHALL BE INSTALLED IN DEDICATED RACEWAYS. (SEE NOTE 1)

4. SEE COMPLETE PLANS AND SPECIFICATIONS FOR DETAILED INFORMATION REGARDING INSTALLATION REQUIREMENTS.

EQUIPMENT LEGEND

- JUNCTION BOX
- RACEWAY
- MESSENGER CABLE SYSTEM
- (#) OR ⟨#⟩ BRIDGE CONTROL EQUIPMENT - SEE DRAWING E-1 FOR TYPE

RACEWAY DESIGNATION

R = CONDUIT

W = WIREWAY

T = CABLE TRAY

M = MESSENGER CABLE SYSTEM

PROJECT NO. B-2532

CRAVEN COUNTY

STATION: 31+21.29 -L-

STATE OF NORTH CAROLINA
DEPARTMENT OF TRANSPORTATION
RALEIGH, NC

BRIDGE CONTROL SYSTEM BLOCK DIAGRAM

NORTH CAROLINA PROFESSIONAL SEAL 031843 ENGINEER GREGORY S. BARON

HNTB NORTH CAROLINA, P.C.
343 E. Six Forks Rd., Suite 200, Raleigh, N.C. 27609

DRAWN BY FG DATE 9/26/06
CHECKED BY MAW DATE 9/26/06

DWG. NO. E-4

REVISIONS						SHEET NO.
NO.	BY	DATE	NO.	BY	DATE	S-765
1			3			TOTAL SHEETS
2			4			348

Cadfile/plot: AT_FED103
Date/Time: 9/26/2006 1:55:05 PM
U:\FF-6857\e\Working Files for 100% submittal\B2532_EL_E04_block diagram.dgn

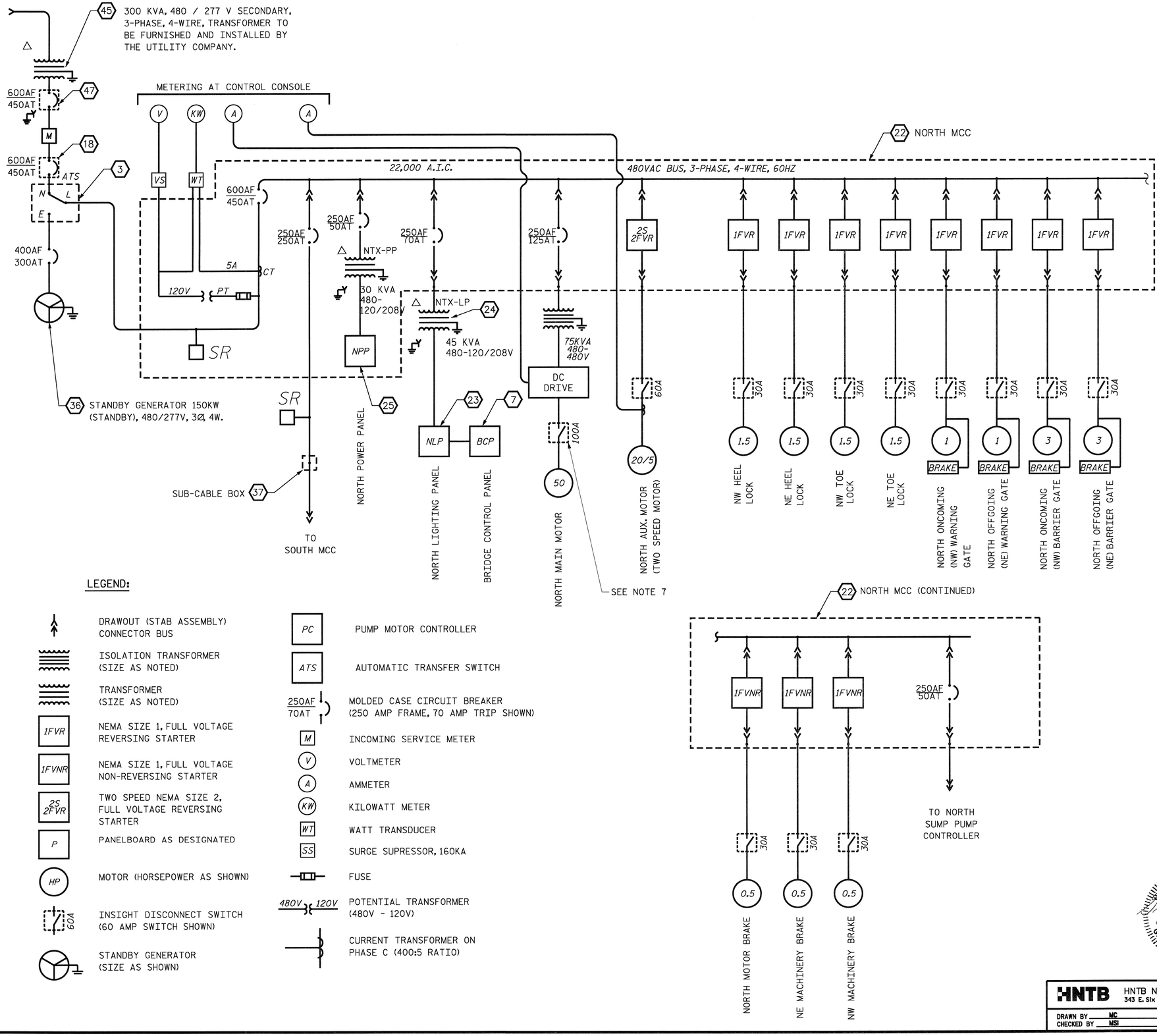

NOTES:

1. FOR PANELBOARD CIRCUIT SCHEDULES, SEE DRAWINGS E-7 AND E-8.
2. ALL PROPOSED ELECTRICAL EQUIPMENT SHALL BE INSTALLED IN THE LOCATIONS DEPICTED IN THE PLANS. SLIGHT DEVIATION SHALL BE PERMITTED ONLY UPON PRIOR APPROVAL OF THE ENGINEER. DETAILS OF EQUIPMENT INSTALLATIONS SHALL BE AS INDICATED IN THE SPECIFICATIONS, OR OTHERWISE DIRECTED BY THE ENGINEER.
3. ALL DERIVED NEUTRALS SHALL BE GROUNDED.
5. MOTOR CONTROL CENTER SECTIONS AND BUCKET ARRANGEMENTS SHALL BE AS SHOWN ON DRAWINGS E-3 AND E-4.
7. DC MOTOR DISCONNECT SWITCHES SHALL BE SIZED AND RATED FOR THE FULL DC VOLTAGE AND CURRENT SUPPLIED TO THE MOTOR. PHENOLIC SIGNS SHALL BE PERMANENTLY ATTACHED TO THE DOOR OF EACH DISCONNECT STATING "DC MOTOR DISCONNECTS SHALL NOT BE OPERATED WHILE THE MOTOR IS RUNNING. ELECTROCUTION AND/OR SERIOUS SYSTEM DAMAGE MAY OCCUR."
8. ALL EQUIPMENT AND MOTOR REQUIREMENTS SHALL BE AS INDICATED IN THE SPECIFICATIONS.
9. ALL MOTOR CONTROL CENTER MOTOR STARTER AND LIGHTING CONTACTOR BUCKETS SHALL BE EQUIPPED WITH INTEGRATED CIRCUIT BREAKERS.
10. FOR INFORMATION REGARDING THE COORDINATION AND RESPONSIBILITY OF ELECTRICAL UTILITY SERVICE, REFER TO THE GENERAL NOTES ON DRAWING E-2.
11. FOR INFORMATION REGARDING POWER CIRCUIT WIRING, SEE THE DRAWINGS ENTITLED "CIRCUIT SCHEDULES" AND "RACEWAY SCHEDULES."
12. ALL SERVICE GROUNDING SHALL BE IN ACCORDANCE WITH THE NEC.
13. PROVIDE INTERLOCK AS SHOWN IN CONTROL SCHEMATICS TO PREVENT OPERATION OF THE MAIN DRIVES WHILE THE STANDBY GENERATOR IS IN OPERATION.

LEGEND:

- DRAWOUT (STAB ASSEMBLY) CONNECTOR BUS
- ISOLATION TRANSFORMER (SIZE AS NOTED)
- TRANSFORMER (SIZE AS NOTED)
- 1FVR — NEMA SIZE 1, FULL VOLTAGE REVERSING STARTER
- 1FVNR — NEMA SIZE 1, FULL VOLTAGE NON-REVERSING STARTER
- 2S 2FVR — TWO SPEED NEMA SIZE 2, FULL VOLTAGE REVERSING STARTER
- P — PANELBOARD AS DESIGNATED
- HP — MOTOR (HORSEPOWER AS SHOWN)
- 60A — INSIGHT DISCONNECT SWITCH (60 AMP SWITCH SHOWN)
- STANDBY GENERATOR (SIZE AS SHOWN)
- PC — PUMP MOTOR CONTROLLER
- ATS — AUTOMATIC TRANSFER SWITCH
- 250AF / 70AT — MOLDED CASE CIRCUIT BREAKER (250 AMP FRAME, 70 AMP TRIP SHOWN)
- M — INCOMING SERVICE METER
- V — VOLTMETER
- A — AMMETER
- KW — KILOWATT METER
- WT — WATT TRANSDUCER
- SS — SURGE SUPRESSOR, 160KA
- FUSE
- 480V / 120V — POTENTIAL TRANSFORMER (480V - 120V)
- CURRENT TRANSFORMER ON PHASE C (400:5 RATIO)

PROJECT NO. B-2532

CRAVEN COUNTY

STATION: 31+21.29 -L-

STATE OF NORTH CAROLINA
DEPARTMENT OF TRANSPORTATION
RALEIGH, NC

NORTH ONE-LINE DIAGRAM

NORTH CAROLINA PROFESSIONAL SEAL 031843 ENGINEER GREGORY S. BARON

HNTB NORTH CAROLINA, P.C.
343 E. Six Forks Rd., Suite 200, Raleigh, N.C. 27609

DRAWN BY MC DATE 9/26/06
CHECKED BY MSI DATE 9/26/06
DWG. NO. E-5

REVISIONS						SHEET NO.
NO.	BY	DATE	NO.	BY	DATE	S-266
1			3			TOTAL SHEETS
2			4			348

fgpl/tsalgo AT FFLD103
03-OCT-2006 17:35
U:\FY-4267\3\e\Working Files for 100% submittal\92539_EL_E05.ll oneline2.dgn

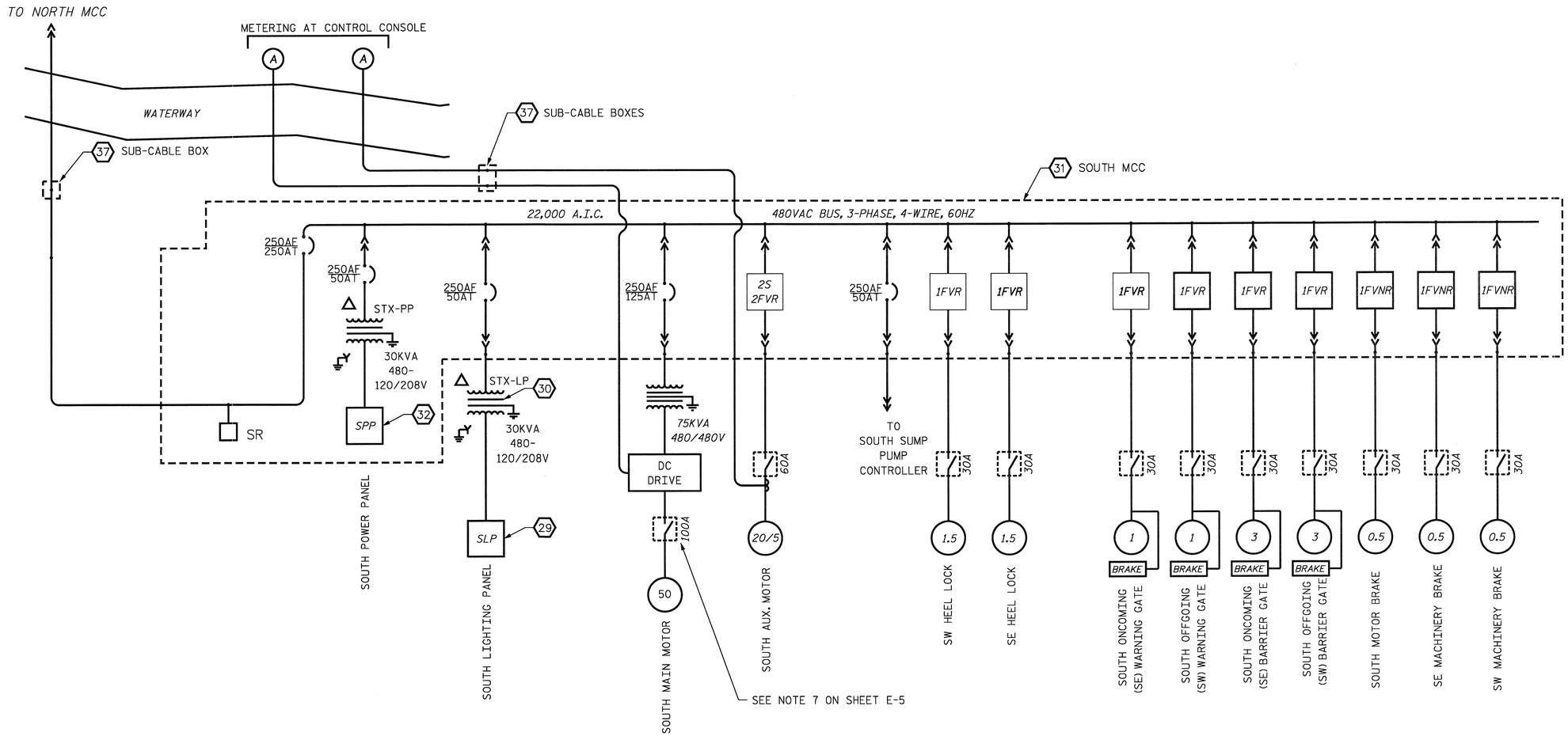

NOTE:

1. SEE NOTES ON NORTH PIER ONE-LINE DIAGRAM, DRAWING E-5.

PROJECT NO. B-2532

CRAVEN COUNTY

STATION: 31+21.29 -L-

STATE OF NORTH CAROLINA
DEPARTMENT OF TRANSPORTATION
RALEIGH, NC

SOUTH ONE-LINE DIAGRAM

NORTH CAROLINA PROFESSIONAL SEAL 031843 ENGINEER GREGORY S. BARON

HNTB HNTB NORTH CAROLINA, P.C.
343 E. Six Forks Rd., Suite 200, Raleigh, N.C. 27609

DRAWN BY MC DATE 9/26/06
CHECKED BY MSI DATE 9/26/06
DWG. NO. E-6

REVISIONS						SHEET NO.
NO.	BY	DATE	NO.	BY	DATE	S-267
1			3			TOTAL SHEETS
2			4			348

fp#1dsbgn 4F FILD103
08/07/2006 15:48
UNFF40573a \Working Files for 100% submittal\B2532_EL_E06_S oneline2D.dgn

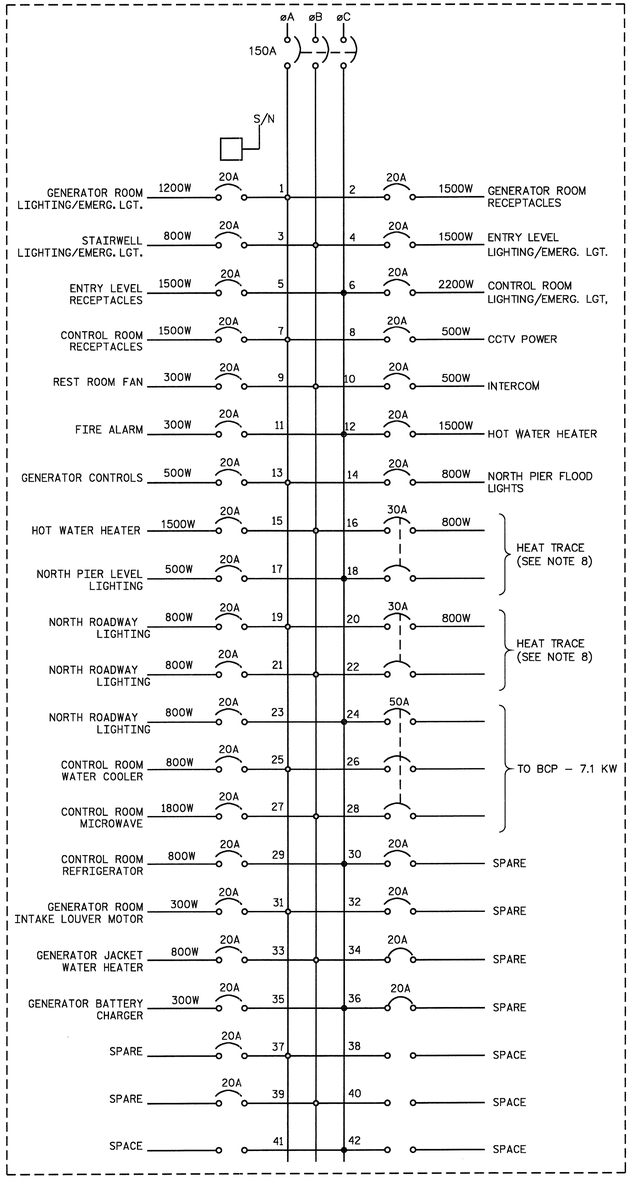

NLP SCHEDULE

(120/208V, 3Ø, 4W)

PANELBOARD SCHEDULE				
NAME	VOLTAGE & PHASE	MOUNTING	MAINS	LOCATION
NPP	120/208V, 3PH	MCC	100 A	NORTH MOTOR CONTROL CENTER
NLP	120/208V, 3PH	FLUSH	150 A	CONTROL HOUSE ENTRY LEVEL
BCP	120/208V, 3PH	SURFACE	50 A	CONTROL CONSOLE

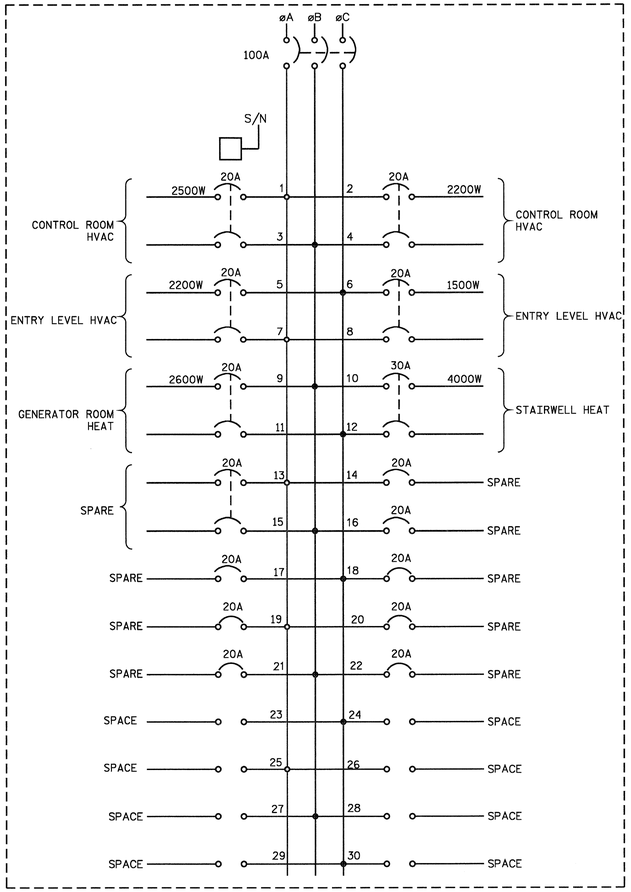

NPP SCHEDULE

(120/208V, 3Ø, 4W)

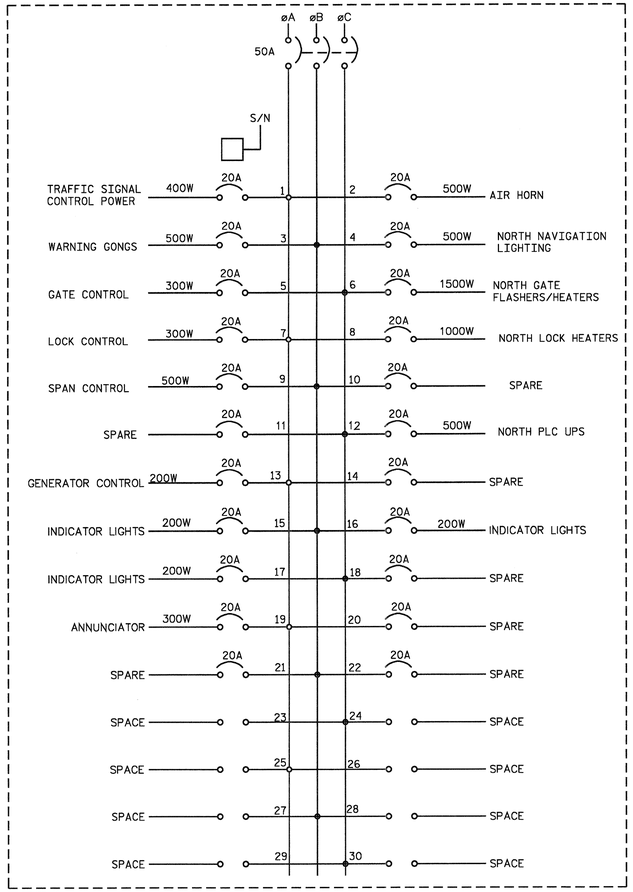

BCP SCHEDULE

(120/208V, 3Ø, 4W)

NOTES:

1. FOR LOCATIONS OF PANELBOARDS, SEE EQUIPMENT LAYOUT DRAWINGS NO. E-24 - E-28.

2. PANELBOARD AND CIRCUIT BREAKER TYPES SHALL BE AS DESCRIBED IN THE SPECIFICATIONS.

3. ALL PANELBOARDS SHALL BE FURNISHED AND INSTALLED WITH TYPED CIRCUIT SCHEDULE LEGENDS IDENTIFYING EACH CIRCUIT BREAKER IN ACCORDANCE WITH THE TERMINOLOGY SHOWN ON THIS DRAWING AND AS INSTALLED IN THE FIELD, WITH THE EXCEPTION OF SPARE CIRCUIT BREAKERS AND SPACES WHICH SHALL HAVE NO LABEL.

4. ALL PANELBOARD AND TRANSFORMER COVERS SHALL HAVE PHENOLIC NAMEPLATES ON THE FRONT SIDE TO IDENTIFY THE PANELBOARD AS NOTED ON THIS DRAWING. NAMEPLATE MATERIAL REQUIREMENTS SHALL BE AS DESCRIBED IN THE SPECIFICATIONS.

5. ELECTRICAL BRANCH CIRCUIT LOAD ARE APPROXIMATE AND HAVE BEEN PROVIDED FOR REFERENCE ONLY. ACTUAL DEMAND LOAD WILL VARY. THE CONTRACTOR IS TO FOLLOW THIS INFORMATION AS CLOSELY AS POSSIBLE SO AS TO MAINTAIN A BALANCED 3-PHASE SYSTEM. ANY DEVIATIONS AND/OR MODIFICATIONS TO THIS SCHEME SHALL BE ONLY AS DIRECTED BY THE ENGINEER.

6. THE CONTRACTOR SHALL INSURE THAT ALL PANELBOARDS ARE BY THE SAME MANUFACTURER SO AS TO SIMPLIFY FUTURE MAINTENANCE OF REPLACEMENT COMPONENTS. PANELBOARD EQUIPMENT SHALL BE AS INDICATED IN THE SPECIFICATIONS.

7. THE CONTRACTOR SHALL INSTALL TERMINAL STRIPS IN THE MCC AS NECESSARY TO ACCOMODATE MULTIPLE FIELD WIRES BEING ROUTED TO INDIVIDUAL CIRCUIT BREAKERS.

TRANSFORMER SCHEDULE					
DESIGNATION	PRIMARY	SECONDARY	KVA	MOUNTING	LOCATION
NTX-PP	480V, 3 PH	120/208V, 3PH	30	MCC	MCC
NTX-LP	480V, 3 PH	120/208V, 3PH	45	FLOOR	CONTROL HOUSE ENTRY LEVEL

8. FOR HEAT TRACE CIRCUITS, BREAKER SIZES AND LOADS HAVE BEEN APPROXIMATED. CONSULT MANUFACTURER FOR PROPER CIRCUIT BREAKER SIZE AND TYPE PRIOR TO INSTALLATION.

PROJECT NO. B-2532

CRAVEN COUNTY

STATION: 31+21.29 -L-

NORTH CAROLINA PROFESSIONAL SEAL 031843 ENGINEER GREGORY S. BARON

STATE OF NORTH CAROLINA
DEPARTMENT OF TRANSPORTATION
RALEIGH, NC

NORTH PANELBOARD SCHEDULES

HNTB HNTB NORTH CAROLINA, P.C.
343 E. Six Forks Rd., Suite 200, Raleigh, N.C. 27609

DRAWN BY MC DATE 9/26/06
CHECKED BY MSI DATE 9/26/06
DWG. NO. E-7

REVISIONS						SHEET NO.
NO.	BY	DATE	NO.	BY	DATE	S-268
1			3			TOTAL SHEETS
2			4			348

forjohnson AT FILD103
08/28/2006 15:49
U:\FHWorking Files for 100\ submittal\B2532_FI_E07_N panel sch2.dgn

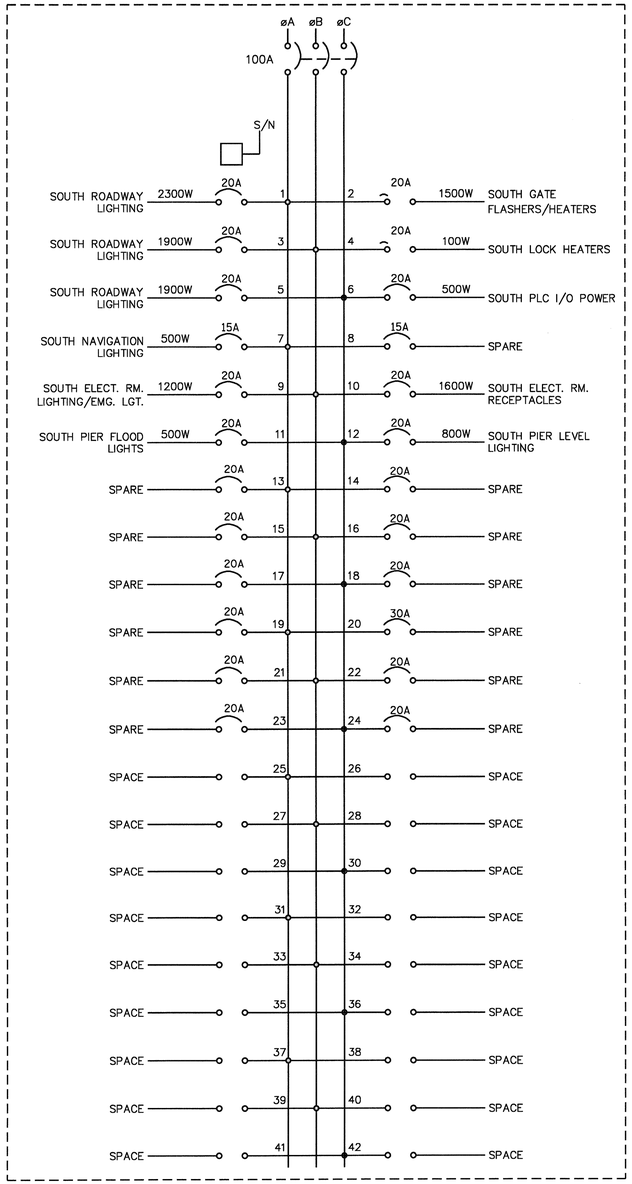

SLP SCHEDULE

(120/208V, 3Ø, 4W)

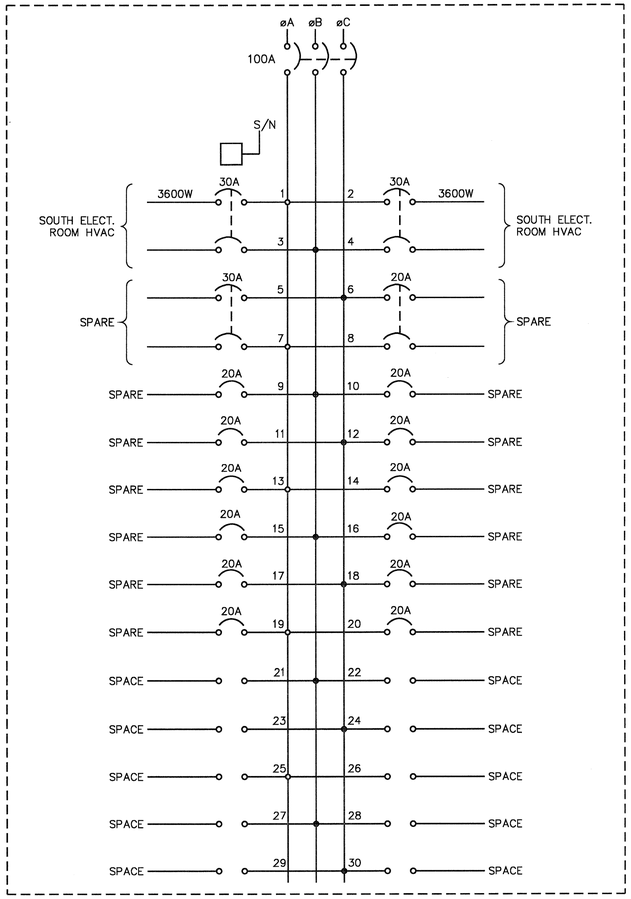

SPP SCHEDULE

(120/208V, 3Ø, 4W)

TRANSFORMER SCHEDULE					
DESIGNATION	PRIMARY	SECONDARY	KVA	MOUNTING	LOCATION
STX-LP	480V, 3 PH	120/208V, 3PH	30	FLOOR	SOUTH ELECTRICAL ROOM
STX-PP	480V, 3 PH	120/208V, 3PH	30	MCC	SOUTH MCC

PANELBOARD SCHEDULE				
NAME	VOLTAGE & PHASE	MOUNTING	MAINS	LOCATION
SPP	120/208V, 3PH	FLUSH	100 A	SOUTH MOTOR CONTROL CENTER
SLP	120/208V, 3PH	FLUSH	100 A	SOUTH ELECTRICAL ROOM

NOTES:

1. FOR LOCATIONS OF PANELBOARDS, SEE EQUIPMENT PLANS, DRAWING NO. E-24 - E-28.

2. PANELBOARD AND CIRCUIT BREAKER TYPES SHALL BE AS DESCRIBED IN THE SPECIFICATIONS.

3. ALL PANELBOARDS SHALL BE FURNISHED AND INSTALLED WITH TYPED CIRCUIT SCHEDULE LEGENDS IDENTIFYING EACH CIRCUIT BREAKER IN ACCORDANCE WITH THE TERMINOLOGY SHOWN ON THIS DRAWING AND AS INSTALLED IN THE FIELD, WITH THE EXCEPTION OF SPARE CIRCUIT BREAKERS AND SPACES WHICH SHALL HAVE NO LABEL.

4. ALL PANELBOARD AND TRANSFORMER COVERS SHALL HAVE PHENOLIC NAMEPLATES ON THE FRONT SIDE TO IDENTIFY THE PANELBOARD AS NOTED ON THIS DRAWING. NAMEPLATE MATERIAL REQUIREMENTS SHALL BE AS DESCRIBED IN THE SPECIFICATIONS.

5. ELECTRICAL BRANCH CIRCUIT LOADS ARE APPROXIMATE AND HAVE BEEN PROVIDED FOR REFERENCE ONLY. ACTUAL DEMAND LOAD WILL VARY. THE CONTRACTOR IS TO FOLLOW THIS INFORMATION AS CLOSELY AS POSSIBLE SO AS TO MAINTAIN A BALANCED 3-PHASE SYSTEM. ANY DEVIATIONS AND/OR MODIFICATIONS TO THIS SCHEME SHALL BE ONLY AS DIRECTED BY THE ENGINEER.

6. THE CONTRACTOR SHALL INSURE THAT ALL PANELBOARDS ARE BY THE SAME MANUFACTURER SO AS TO SIMPLIFY FUTURE MAINTENANCE OF REPLACEMENT COMPONENTS. PANELBOARD EQUIPMENT SHALL BE AS SINDICATED IN THE SPECIFICATIONS.

7. THE CONTRACTOR SHALL INSTALL TERMINAL STRIPS IN THE MCC AS NECESSARY TO ACCOMODATE MULTIPLE FIELD WIRES BEING ROUTED TO INDIVIDUAL CIRCUIT BREAKERS.

PROJECT NO. B-2532

CRAVEN COUNTY

STATION: 31+21.29 -L-

STATE OF NORTH CAROLINA
DEPARTMENT OF TRANSPORTATION
RALEIGH, NC

SOUTH PANEL BOARD SCHEDULES

NORTH CAROLINA PROFESSIONAL SEAL 031843 ENGINEER GREGORY S. BARON

HNTB HNTB NORTH CAROLINA, P.C.
343 E. Six Forks Rd., Suite 200, Raleigh, N.C. 27609

DRAWN BY FA DATE 9/26/06
CHECKED BY MSI DATE 9/26/06
DWG. NO. E-8

REVISIONS						SHEET NO.
NO.	BY	DATE	NO.	BY	DATE	S-269
1			3			TOTAL SHEETS
2			4			348

ftpbackup AT FTLD103
08/27/2006 14:50
U:\FF4567a\Working Files for 100% submittal\B2532_EL_E08_S panel sch2.dgn

GAITRONICS INTERCOM EQUIPMENT LISTING

- 1201A SPEAKER
- 7305 OUTDOOR WALL STATION UNIT
- 7005 INDOOR WALL STATION UNIT
- HP158 HORN SPEAKERS, DRIVER, AND 4128 MOUNTING ASSEMBLY
- WIDE ANGLE LOUD SPEAKER DESIGNED FOR OUTDOOR INSTALLATION
- 305-001 B01018 LINE BALANCE ASSEMBLY
- POWER
- PAGE LINE
- PARTY LINE
- SUB — SUBMARINE CABLE CABINET

NOTES:

1. ALL SYSTEM WIRING SHALL BE AS PER THE MANUFACTURER'S SPECIFICATION. INTERCOM WIRING ROUTED BETWEEN CONTROL HOUSE FLOORS SHALL BE INSTALLED BEHIND FINISHED WALLS IN THE CONTROL ROOM, OTHERWISE THE WIRING SHALL BE INSTALLED WITHIN SURFACE MOUNTED CONDUIT.
2. INTERCOM EQUIPMENT NUMBERS ARE BASED ON GAITRONICS CORPORATION'S 700 SERIES PAGE PARTY SYSTEM. A SYSTEM WITH EQUAL PHYSICAL AND OPERATIONAL CHARACTERISTICS MAY BE SUBMITTED FOR APPROVAL. THE CONTRACTOR SHALL FURNISH AND INSTALL THIS EQUIPMENT AS NOTED.
3. MINIMUM CONDUIT SIZE SHALL BE ✳. ALL CONDUITS SHALL BE FIBERGLASS.
4. INSTALLATION OF INTERCOMS REQUIRE ONE PAIR OF UNSHIELDED CONDUCTORS FOR THE PAGE FEATURE, ONE PAIR OF UNSHIELDED CONDUCTORS FOR THE PARTY LINE CIRCUIT, AND ONE TWISTED TRIPLET FOR 120VAC POWER.
5. ALL EQUIPMENT SHALL BE SURFACE MOUNTED USING EXPANSION ANCHORS, SIZED PER MANUFACTURER'S DIRECTIONS.
6. FOR INSTALLATION LOCATIONS OF INTERCOM EQUIPMENT, SEE CONTROL HOUSE, ELECTRIC ROOMS, AND BASCULE PIER LIGHTING, FIRE ALARM, AND INTERCOM LAYOUT PLANS (DRAWINGS E-37, E-38, E-39 & E-10).
7. OUTDOOR LOUDSPEAKERS, SHALL BE MOUNTED ON LIGHT POLES AND SHALL BE ORIENTED FACING THE ROADWAY. THESE SPEAKERS SHALL BE ASSIGNED A DESIGNATED PAGE CHANNEL FOR ANNOUNCEMENTS TO PEDESTRIANS AND MOTORISTS.
8. ALL INTERCOM SPEAKERS MOUNTED ON LIGHT POLES SHALL BE INSTALLED AT 13 FEET ABOVE THE ROADWAY, UNLESS PROHIBITED BY PHYSICAL CONDITIONS.

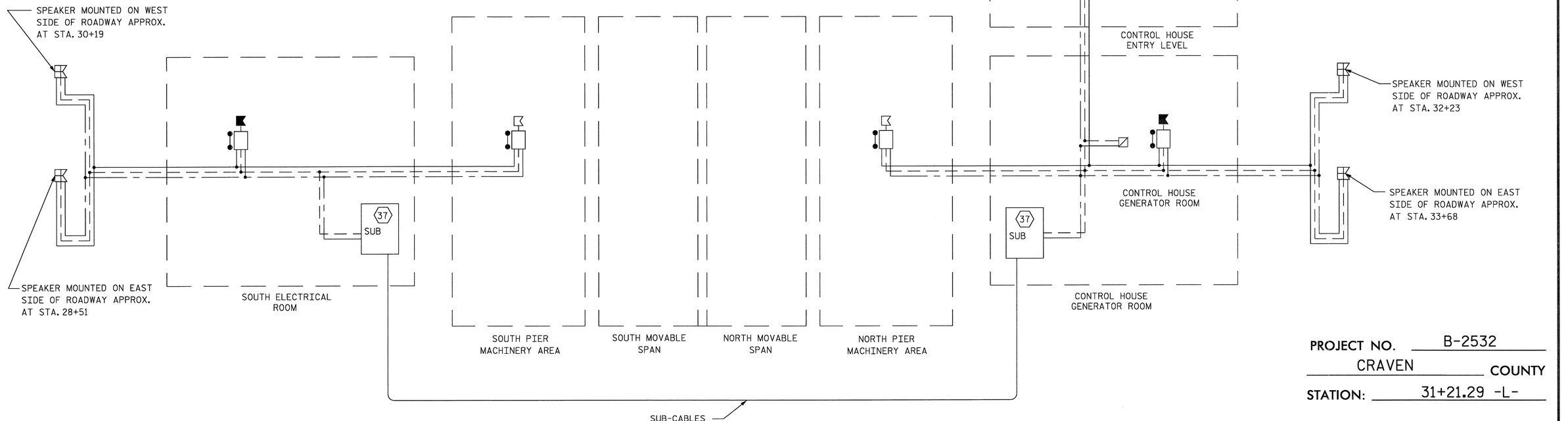

PROJECT NO. B-2532

CRAVEN COUNTY

STATION: 31+21.29 -L-

STATE OF NORTH CAROLINA
DEPARTMENT OF TRANSPORTATION
RALEIGH, NC

INTERCOM SYSTEM BLOCK DIAGRAM

NORTH CAROLINA PROFESSIONAL SEAL 031843 ENGINEER GREGORY S. BARON

HNTB NORTH CAROLINA, P.C.
343 E. Six Forks Rd., Suite 200, Raleigh, N.C. 27609

DRAWN BY WL DATE 9/26/06
CHECKED BY MS DATE 9/26/06
DWG. NO. E-9

REVISIONS						SHEET NO.
NO.	BY	DATE	NO.	BY	DATE	S-270
1			3			TOTAL SHEETS
2			4			348

toplotter AT FFLD103
07/26/2006 15:51
O:\FY-4957\e1\Working Files for 100% submittal\B2532_FI_E09_Intercom system block diagram.dgn

FIRE ALARM SYSTEM

SIMPLEX COMPONENTS

(S)	4098-9714 TRUE ALARM PHOTOELECTRIC SMOKE DETECTOR
(H)	HEAT DETECTOR
PULL	4099-9001 IDNET ADDRESSABLE MANUAL PULL STATION
	4903-9453 TRUE ALERT HORN/STROBE W/ 15cd
	4903-9454 TRUE ALERT HORN/STROBE W/ 75cd
F	4010 TRUE ALARM FIRE ALARM CONTROL PANEL

COMPONENTS BY OTHER MANUFACTURES

	WHEELOCK ASWP W/ WPBB-R WEATHERPROOF AUDIBLE STROBE
— — —	(2) #14 AWG
———	#18 AWG TWISTED PAIR

FIRE ALARM NOTES:

1. FIRE ALARM EQUIPMENT NUMBERS SHOWN ARE BY SIMPLEX. AN ALTERNATE EQUAL SYSTEM MAY BE SUBMITTED FOR APPROVAL.
2. WIRING FOR FIRE ALARM SYSTEM SHALL BE ENCLOSED IN RACEWAY DEDICATED SOLELY FOR FIRE ALARM SYSTEM AND SHALL BE AS PER MANUFACTURER'S DIRECTIONS. MINIMUM CONDUIT SIZE SHALL BE *".
3. A REPRESENTATIVE OF THE ALARM SYSTEM MFR SHALL BE ONSITE DURING INSTALLATION OF FIRE DETECTION SYSTEM.
4. THERE SHALL BE A MAXIMUM OF 10 HORN/STROBE UNITS PER CIRCUIT.
5. IN AREAS THAT MAY BE DUSTY, HEAT SENSOR UNITS MAY BE INSTALLED IN LIEU OF SMOKE DETECTOR UNITS WITHOUT REPROGRAMMING OF THE CONTROL PANEL. SMOKE DETECTOR UNITS SHALL NOT BE COVERED BY ANY MEANS TO AVOID EXPOSURE TO DUST AND DIRT.
6. EACH SMOKE DETECTOR OR PULL STATION SHALL HAVE ITS OWN ADDRESSABLE MONITOR AND CONTROL POINT.
7. IT SHALL BE THE RESPONSIBILITY OF THE CONTRACTOR TO RESOLVE SYSTEM PROGRAMMING ISSUES WITH THE SYSTEM VENDOR.
8. SEE LIGHTING, FIRE ALARM, AND INTERCOM LAYOUT PLANS FOR DEVICE LOCATIONS (DRAWINGS E-37, E-38, E-39, & E-9).

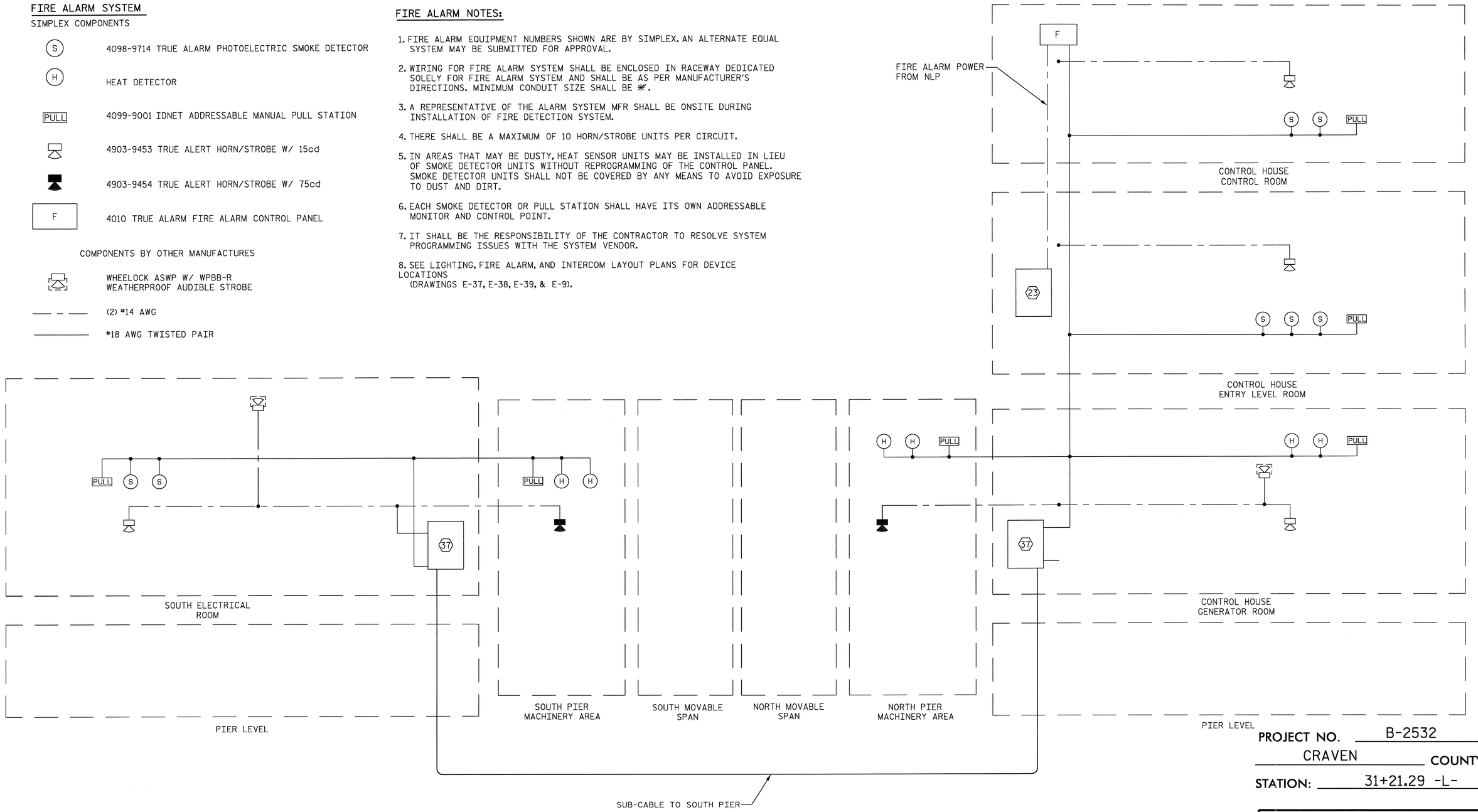

PROJECT NO. B-2532

CRAVEN COUNTY

STATION: 31+21.29 -L-

NORTH CAROLINA PROFESSIONAL SEAL 031843 ENGINEER GREGORY S. BARON

STATE OF NORTH CAROLINA
DEPARTMENT OF TRANSPORTATION
RALEIGH, NC

FIRE ALARM SYSTEM BLOCK DIAGRAM

HNTB HNTB NORTH CAROLINA, P.C.
343 E. Six Forks Rd., Suite 200, Raleigh, N.C. 27609

DRAWN BY WL DATE 9/26/06
CHECKED BY MS DATE 9/26/06
DWG. NO. E-10

REVISIONS						SHEET NO.
NO.	BY	DATE	NO.	BY	DATE	S-271
1			3			TOTAL SHEETS
2			4			348

fontheigpo AT FILD103
CAD Version 16.2
U:\FF4B573\e\Working Files for 100% submittal\B2532_ELE 10_firealarm system block diagram.dgn

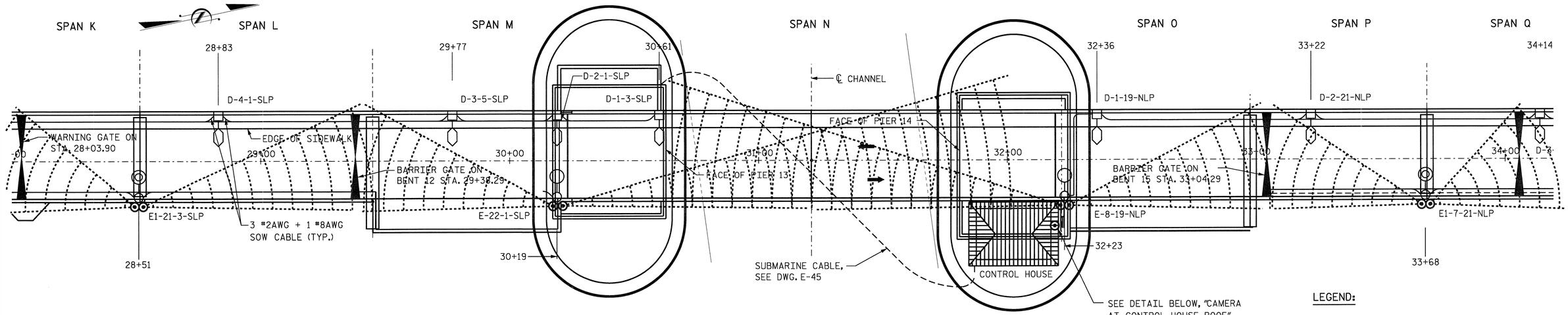

CCTV VIEWING ANGLE PLAN

SCALE : 1"=20'

LEGEND:

- SPEAKER
- CAMERA
- CAMERA VIEWING ANGLE
- ROADWAY LIGHTING STANDARDS (SEE DRAWING E-13)

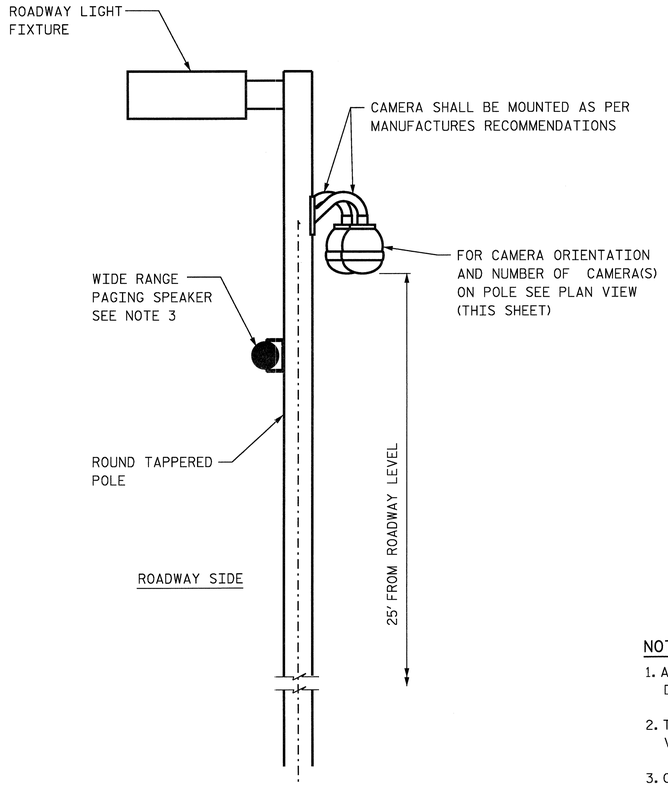

LAMP POST WITH CCTV & SPEAKER

NOT TO SCALE

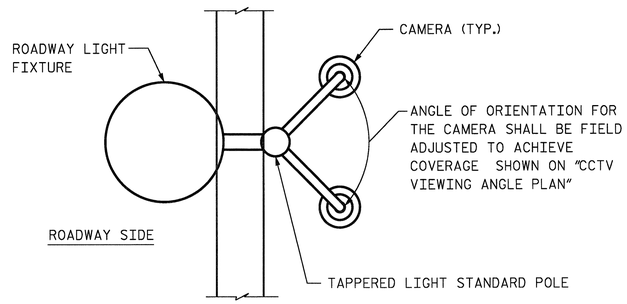

PLAN VIEW

NOT TO SCALE

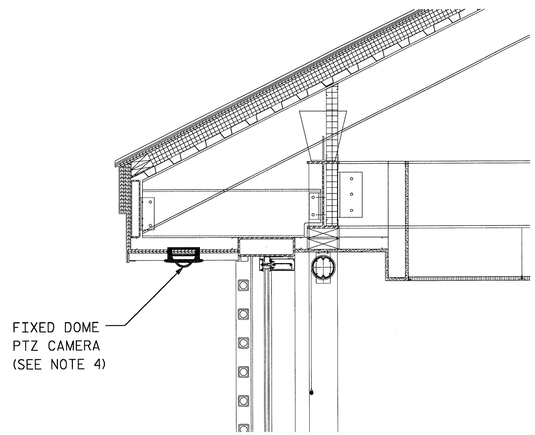

CAMERA AT CONTROL HOUSE ROOF

NOT TO SCALE

NOTE:

1. ALL CCTV EQUIPMENT SPECIFIED ON THIS DRAWING IS BASED ON DEVICES AS MANUFACTURED BY AXIS (214 PTZ NETWORK CAMERA).
2. THE SYSTEM SHOWN REFLECTS CAMERAS WITH FIXED VIEW ANGLES, VIEW ANGLES SHALL BE CHANGED ONLY IF NECESSARY.
3. OUTDOOR LOUDSPEAKERS SHALL BE MOUNTED ON LIGHT POLES AND SHALL BE ORIENTED FACING THE ROADWAY. THE SPEAKERS SHALL BE MOUNTED AT 13' FROM THE ROADWAY UNLESS PHYSICALLY IMPRACTICAL. THESE SPEAKERS SHALL BE ASSIGNED A DESIGNATED PAGE CHANNEL FOR ANNOUNCEMENT TO PEDESTRIANS AND MOTORISTS.
4. SOFFIT MOUNTED CAMERA SHOULD BE FIELD LOCATED FOR OPTIMUM VIEW OF THE CONTROL HOUSE ENTRANCE DOOR.

PROJECT NO. B-2532

CRAVEN COUNTY

STATION: 31+21.29 -L-

STATE OF NORTH CAROLINA
DEPARTMENT OF TRANSPORTATION
RALEIGH, NC

ROADWAY INTERCOM AND CCTV SYSTEM DETAILS

NORTH CAROLINA PROFESSIONAL SEAL 031843 ENGINEER GREGORY S. BARON

HNTB NORTH CAROLINA, P.C.
343 E. Six Forks Rd., Suite 200, Raleigh, N.C. 27609

DRAWN BY WL DATE 9/26/06
CHECKED BY MS DATE 9/26/06
DWG. NO. E-11

REVISIONS						SHEET NO.
NO.	BY	DATE	NO.	BY	DATE	S-272
1			3			TOTAL SHEETS
2			4			348

Geotechnical Engineering Unit
Date: 10/26/2006 11:55:
User: MT FELD103
C:\Projects\UNFIELD\Working Files for 100% submittal\B2532_EL_E11_CCTV Sys Dtails.dgn

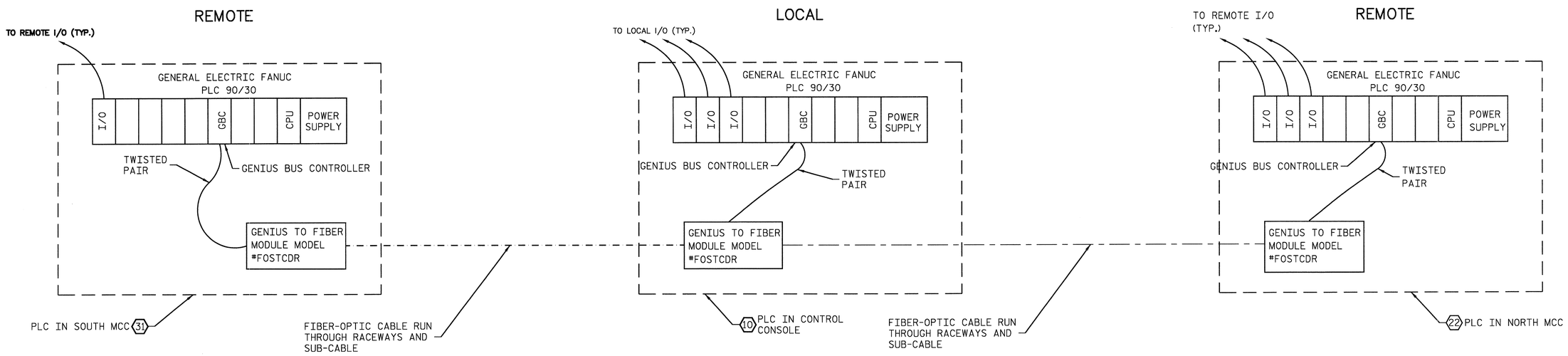

PLC SYSTEM BLOCK DIAGRAM

NO SCALE

NOTES:

1. WIRING AND FIBER CONNECTIONS AND COMPONENTS SHALL BE AS SPECIFIED BY THE MANUFACTURER.

2. THIS BLOCK DIAGRAM IS INTENDED TO SHOW OVERALL PLC SYSTEM ARCHITECTURE ONLY. EXACT NUMBER OF I/O MODULES AND OTHER SYSTEM COMPONENTS SHALL BE AS REQUIRED FOR THE CONTROL SYSTEM OPERATION SHOWN IN THE SCHEMATICS AND TABLES.

3. TWO MAIN CPU'S SHALL BE PROVIDED IN THE CONTROL CONSOLE WITH A MEANS FOR THE OPERATOR TO MANUALLY SWITCH BETWEEN CPU-A AND CPU-B.

4. REMOTE I/O WITH FIBER OPTIC CONNECTIONS.

PROJECT NO. B-2532

CRAVEN COUNTY

STATION: 31+21.29 -L-

NORTH CAROLINA PROFESSIONAL SEAL 031843 ENGINEER GREGORY S. BARON

STATE OF NORTH CAROLINA
DEPARTMENT OF TRANSPORTATION
RALEIGH, NC

PLC SYSTEM BLOCK DIAGRAM

HNTB HNTB NORTH CAROLINA, P.C.
343 E. Six Forks Rd., Suite 200, Raleigh, N.C. 27609

DRAWN BY MAW DATE 9/26/06
CHECKED BY MAW DATE 9/26/06

DWG. NO. E-12

REVISIONS						SHEET NO.
NO.	BY	DATE	NO.	BY	DATE	223
1			3			TOTAL SHEETS
2			4			348

Cadfolder: N:_FLD103
Cadfile: 2532_E12.dgn
UNFF-I26734\Working Files for 1003 submittal\B2532_ELEV12.pic diagram.dgn

ROADWAY ELECTRICAL PLAN -1-
TOP

ROADWAY ELECTRICAL PLAN -1-
BOTTOM

ROADWAY ELECTRICAL PLAN -2-
TOP

ROADWAY ELECTRICAL PLAN -2-
BOTTOM

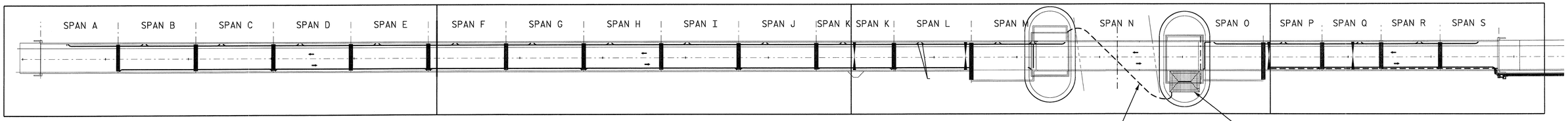

BRIDGE PLAN VIEW
(SEE NOTE 6)

LIGHTING SCHEDULE

SYMBOL	LABEL	DESCRIPTION	QTY.	LOAD EACH (WATTS)	LOAD TOTAL (WATTS)
□⊣◇	D	DECORATIVE PEDESTRIAN LIGHTING STANDARD WITH 175W METAL-HALIDE LUMINAIRE MOUNTED ON A 9' CAST IRON POLE. ANTIQUE STREET LAMPS CAT #PI-C17-9-ANBK (POLE) ANTIQUE STREET LAMPS CAT #AT23-W-175M-MOG-PCT-GR3-120-ANBK (LUMINAIRE)	20	206	4120
○⊣○	E	30' HIGH TAPERED ROUND STEEL POLE WITH 400W METAL-HALIDE ROADWAY TYPE LUMINAIRE. KIM LTG. CAT #PTRS30-7512O-A-BL-P (POLE) KIM LTG. CAT #1A-CC25A2-400MH-12O-BL-P (LUMINAIRE) FURNISHED AND INSTALLED BY OTHERS.	2	454	908
○⊣◎	E1	30' HIGH TAPERED ROUND STEEL POLE WITH 250W METAL-HALIDE ROADWAY TYPE LUMINAIRE. KIM LTG. CAT #PTRS30-7512O-A-BL-P (POLE) KIM LTG. CAT #1A-CC25A2-250MH-12O-BL-P (LUMINAIRE)	8	286	2288

LEGEND

——— CABLE TYPE SOW-A RUN THROUGH MESSENGER CABLE SYSTEM. (SEE ELECTRICAL SPECIAL PROVISIONS)

TYPICAL NOTATION

○⊣○
D-3-5-NLP

D - INDICATES LIGHTING STANDARD TYPE
3 - INDICATES NUMBER OF LIGHTING STANDARD
5 - INDICATES LUMINAIRE CIRCUIT / PHASE CONNECTION
NLP - INDICATES POWER FROM NORTH LIGHTING PANEL
VIA LIGHTING CONTACTOR IN NORTH MCC
(SLP WOULD INDICATE POWER FROM SOUTH LIGHTING PANEL
VIA LIGHTING CONTACTOR IN SOUTH MCC_.

NOTES:

1. FOR PLAN VIEW DETAILS, SEE DRAWINGS E-14 AND E-15.
2. ALL CABLE ROUTING & JUNCTION BOX LOCATIONS SHOWN ON PLANS ARE DIAGRAMMATIC, EXACT LOCATIONS SHALL BE DETERMINED IN FIELD.
3. FURNISH ALL MISCELLANEOUS MATERIAL SUCH AS FITTINGS, CLAMPS AND HARDWARE NECESSARY TO COMPLETE THE INSTALLATION.
4. ALL LIGHTING CABLE ARE TYPE SOW-A WITH 3 #2AWG + 1 #8AWG GROUND WIRE UNLESS OTHERWISE SPECIFIED OR NOTED ON PLANS.
5. FOR INSTALLATION DETAILS OF JUNCTION BOXES, CABLES AND LIGHTING STANDARD, SEE DRAWINGS E-16 AND E-17.
6. ELECTRICAL EQUIPMENT IS NOT SHOWN HERE SO AS TO IMPROVE CLARITY OF THIS DRAWING. SEE DRAWINGS E-14 AND E-15 FOR FURTHER DETAIL.
7. THE NORTH AND SOUTH LIGHTING CONTACTORS SHALL BE LOCATED IN TEH NORTH AND SOUTH MCC'S, RESPECTIVELY. SEE DRAWING E-72 FOR CIRCUIT DETAILS.

PROJECT NO. B-2532
CRAVEN COUNTY
STATION: 31+21.29 -L-

NORTH CAROLINA PROFESSIONAL SEAL 031843 ENGINEER GREGORY S. BARON

STATE OF NORTH CAROLINA
DEPARTMENT OF TRANSPORTATION
RALEIGH, NC

ROADWAY ELECTRICAL KEY AND LIGHTING SCHEDULES

HNTB HNTB NORTH CAROLINA, P.C.
343 E. Six Forks Rd., Suite 200, Raleigh, N.C. 27609

DRAWN BY WL DATE 9/26/06
CHECKED BY FS DATE 9/26/06
DWG. NO. E-13

REVISIONS						SHEET NO.
NO.	BY	DATE	NO.	BY	DATE	S-274
1			3			TOTAL SHEETS
2			4			348

Contractor KT FID103
USER:cgoodson
U:\FF4597.1a\Working Files for 100% submittal\B2532_EL_E13_Rdwy Elec Plan 1.dgn

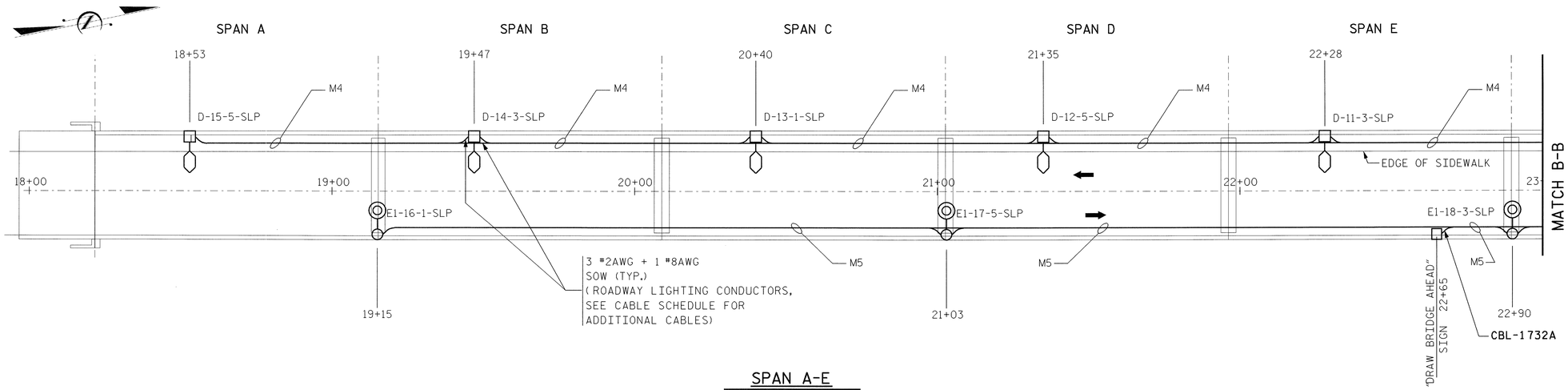

SPAN A-E

NOT TO SCALE

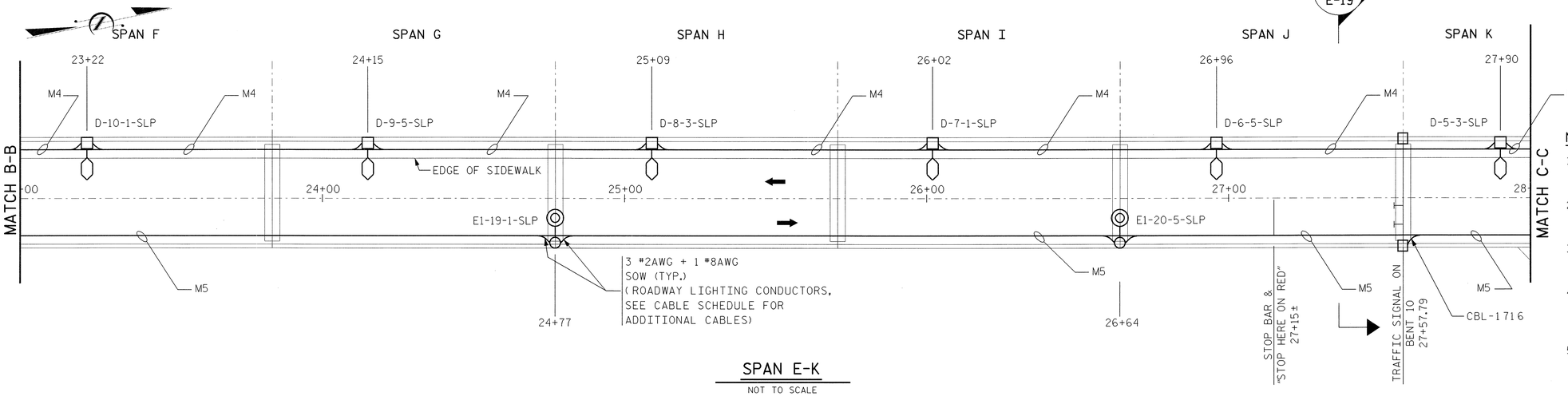

SPAN E-K

NOT TO SCALE

NOTE:

1. FOR LIGHTING SCHEDULES, NOTES, SYMBOLS & ABBREVIATIONS, SEE DRAWING E-13.
2. FOR DETAIL ON EQUIPMENT, SEE DWGS. E-19 THROUGH E-23.
3. FOR LIGHT FIXTURE DETAILS, SEE DWG. E-17.
4. FOR BRIDGE CONTROL SYSTEM SCHEDULES AND RACEWAY SCHEDULES, SEE DWGS. E-83 THROUGH E-87.
5. STATION NUMBERS INDICATED ON THIS DRAWING ARE APPROXIMATE. SEE APPROACH SPAN DRAWINGS FOR ACTUAL LOCATIONS.

PROJECT NO. B-2532

CRAVEN **COUNTY**

STATION: 31+21.29 -L-

STATE OF NORTH CAROLINA
DEPARTMENT OF TRANSPORTATION
RALEIGH, NC

ROADWAY ELECTRICAL PLAN 1

NORTH CAROLINA PROFESSIONAL SEAL 031843 ENGINEER GREGORY S. BARON

HNTB HNTB NORTH CAROLINA, P.C.
343 E. Six Forks Rd., Suite 200, Raleigh, N.C. 27609

DRAWN BY WL DATE 10/20/06
CHECKED BY FS DATE 10/20/06
DWG. NO. E-14

REVISIONS						SHEET NO.
NO.	BY	DATE	NO.	BY	DATE	S-275
1			3			TOTAL SHEETS
2			4			348

Jobnum AT_FFLD126
10/20/2006 4:40:10 PM
U:\AT\B2532\Working Files for 100% submittal\B2532_FL_E_14_Roky Elec Plan 2.dgn

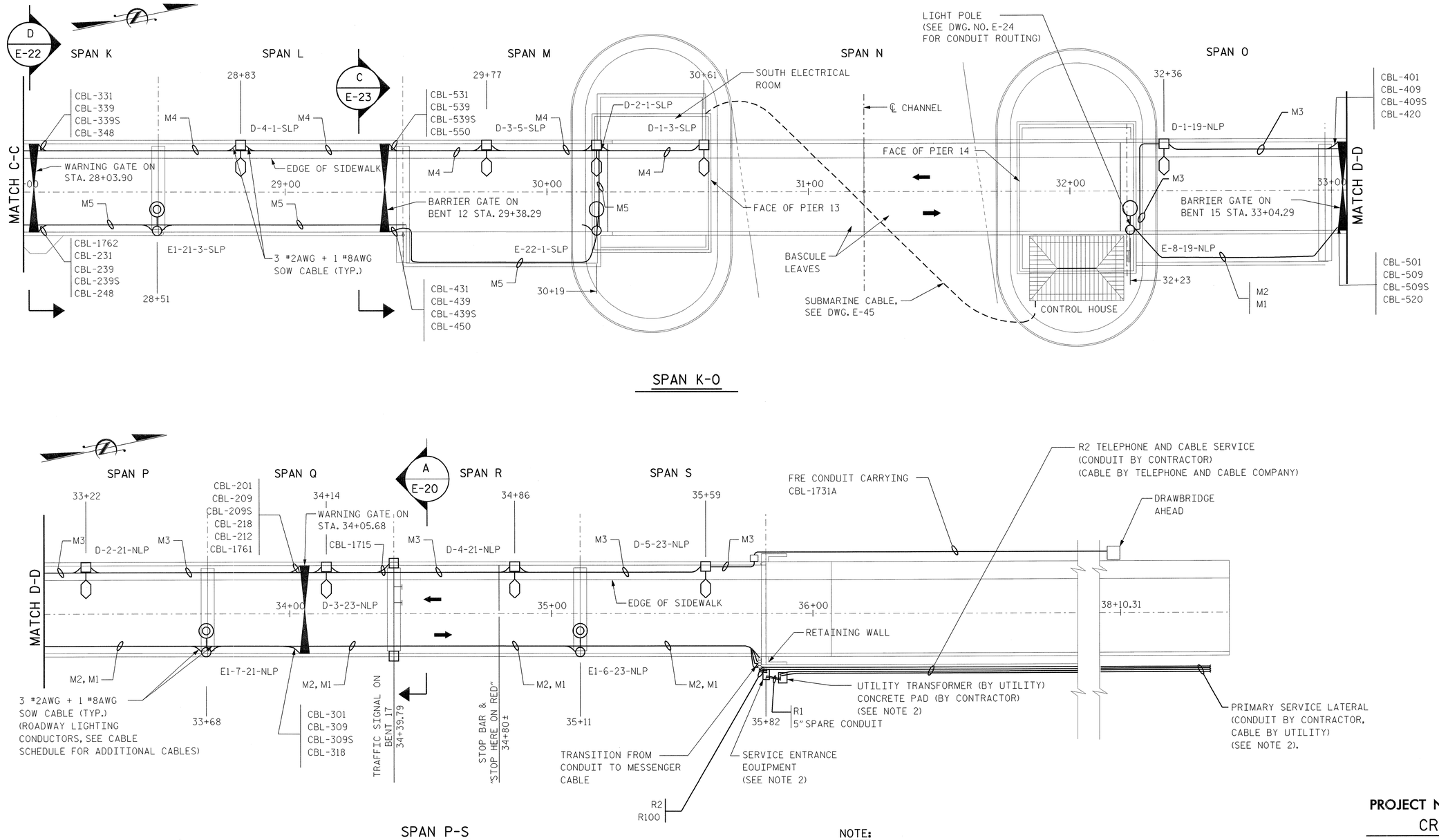

SPAN K-O

SPAN P-S

NOTE:

1. FOR LIGHTING SCHEDULES, NOTES, SYMBOLS & ABBREVIATIONS, SEE DRAWING E-13.
2. FOR ELECTRIC SERVICE DETAIL, SEE DWG. E-41.
3. SPARE CONDUIT SHALL BE CAPPED AT 12 INCHES ABOVE FINISHED GRADE.
4. FOR BRIDGE CONTROL SYSTEM CABLE SCHEDULES AND RACEWAY SCHEDULES, SEE DWGS. E-83 THROUGH E-87.
5. STATION NUMBERS INDICATED ON THIS DRAWING ARE APPROXIMATE. SEE APPROACH SPAN DRAWINGS FOR ACTUAL LOCATIONS.

PROJECT NO. B-2532

CRAVEN COUNTY

STATION: 31+21.29 -L-

STATE OF NORTH CAROLINA
DEPARTMENT OF TRANSPORTATION
RALEIGH, NC

ROADWAY
ELECTRICAL PLAN 2

NORTH CAROLINA PROFESSIONAL SEAL 031843 ENGINEER GREGORY S. BACON

HNTB NORTH CAROLINA, P.C.
343 E. Six Forks Rd., Suite 200, Raleigh, N.C. 27609

DRAWN BY WL DATE 10/20/06
CHECKED BY FS DATE 10/20/06
DWG. NO. E-15

REVISIONS						SHEET NO.
NO.	BY	DATE	NO.	BY	DATE	S-276
1			3			TOTAL SHEETS
2			4			348

jdeaman AT FFLD126
10/20/2006 4:40:01 PM
u:\PROJECTS\Working Files for 100% submittal\B2532_E1_E15_Relay Elec Plan 3.dgn

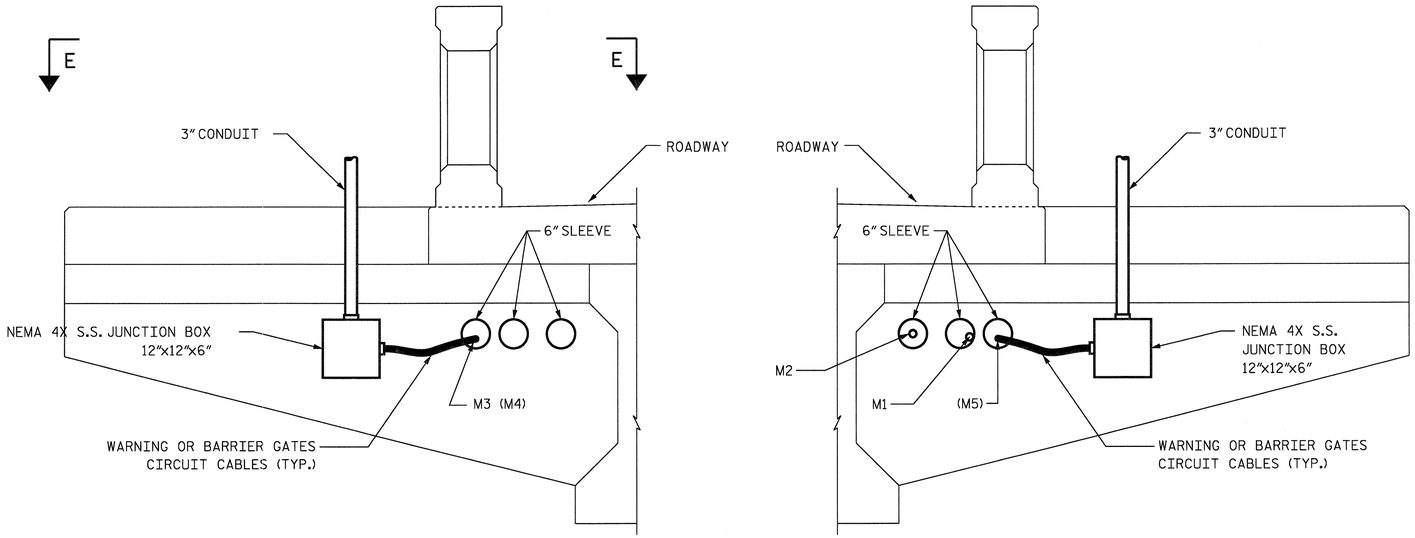

PARTIAL PLAN - WEST SIDE

PARTIAL PLAN - EAST SIDE

TYPICAL ELEVATIONS OF WARNING AND BARRIER GATE

NOT TO SCALE

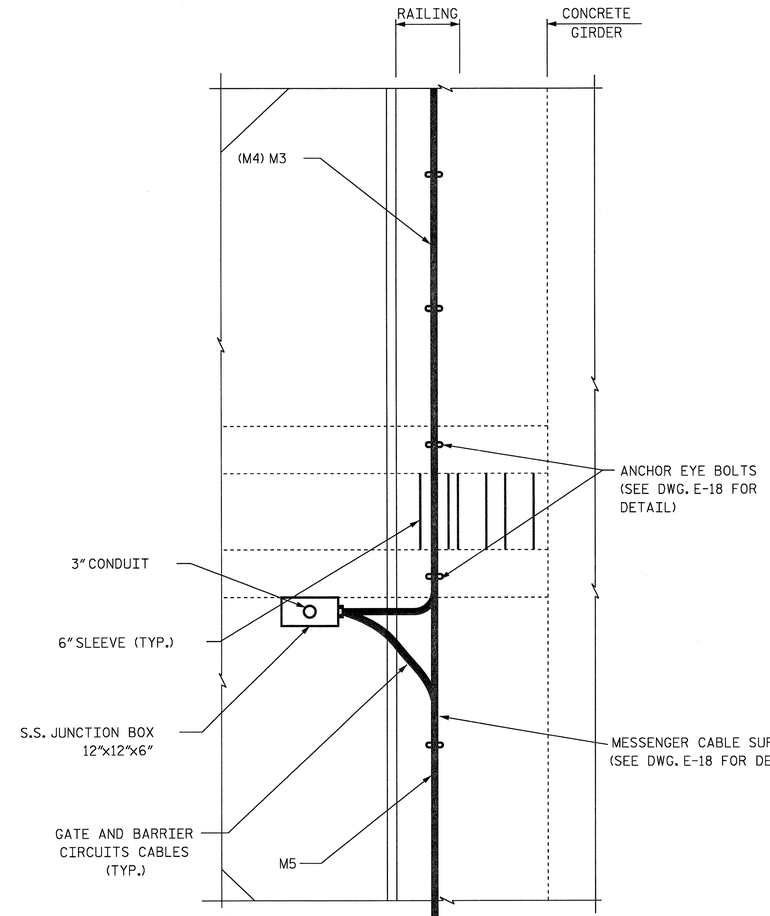

SECTION E-E

NOT TO SCALE

NOTE: WEST SIDE SHOWN, EAST SIDE SIMILAR

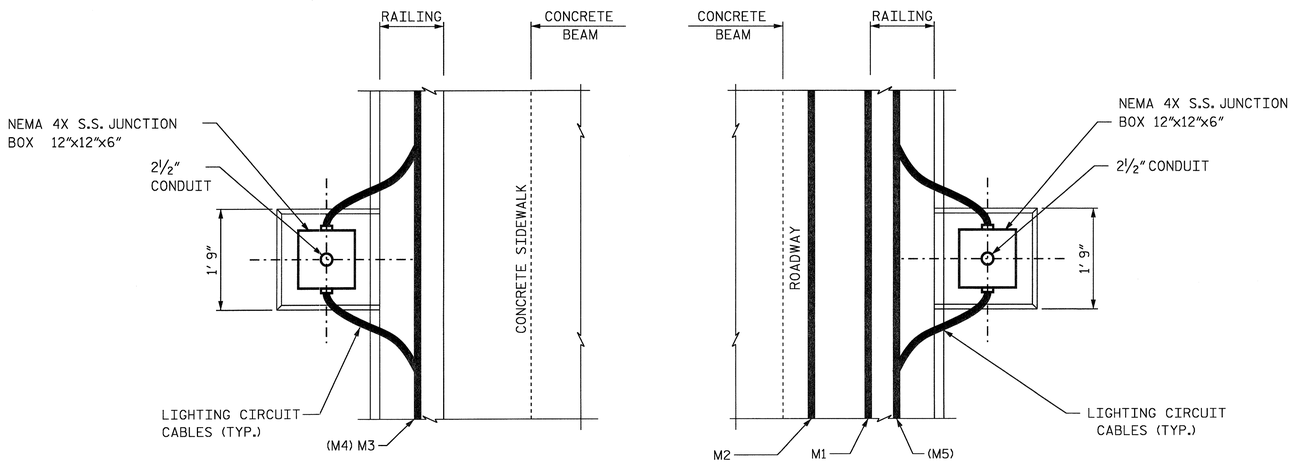

PARTIAL REFLECTED CEILING PLAN
WEST SIDE

PARTIAL REFLECTED CEILING PLAN
EAST SIDE

TYPICAL MESSENGER CABLE SYSTEM ROUTING BELOW LIGHT POLES

NOT TO SCALE

LEGEND

(M4) MESSENGER CABLE DESIGNATION IN PARENTHESES INDICATES SOUTH SIDE OF BRIDGE.
M3 DESIGNATION WITHOUT PARENTHESES INDICATES NORTH SIDE OF BRIDGE.

PROJECT NO. B-2532

CRAVEN COUNTY

STATION: 31+21.29 -L-

STATE OF NORTH CAROLINA
DEPARTMENT OF TRANSPORTATION
RALEIGH, NC

ROADWAY ELECTRICAL DETAILS

NORTH CAROLINA PROFESSIONAL SEAL 031843 ENGINEER GREGORY S. BARON

HNTB HNTB NORTH CAROLINA, P.C.
343 E. Six Forks Rd., Suite 200, Raleigh, N.C. 27609

DRAWN BY WL DATE 9/26/06
CHECKED BY MS DATE 9/26/06
DWG. NO. E-16

REVISIONS						SHEET NO.
NO.	BY	DATE	NO.	BY	DATE	S-277
1			3			TOTAL SHEETS
2			4			348

fmlichtenau AT FFLD103
DGN: 0606.dgn
USER: MJE
LAST MODIFIED: 9/26/2006 11:46:47 AM
LAST PLOTTED: 9/26/2006 11:47:00 AM
LAST SAVED: 9/26/2006 11:46:47 AM
LAST PLOTTED BY: MJE
LAST SAVED BY: MJE
UNFF405\Data\Working Files for 100% submittal\B2532_ELE16_Relay Elec detail.dgn

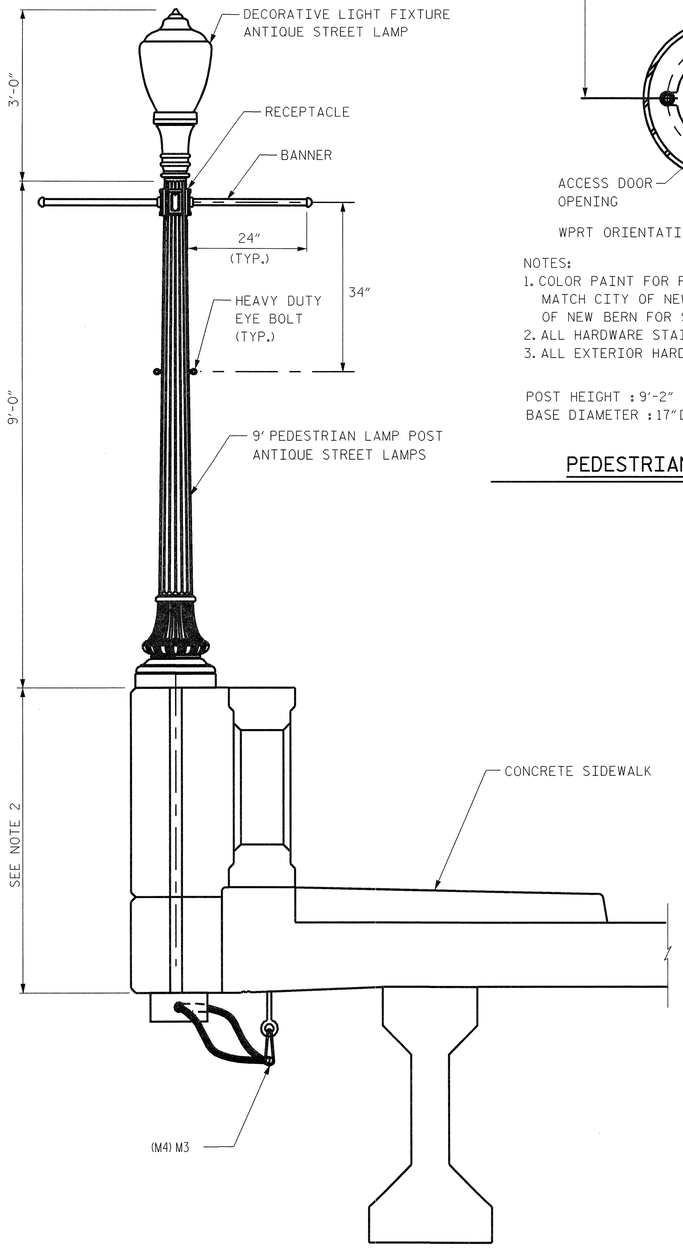

WEST SIDE

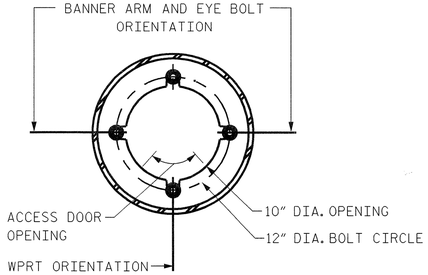

NOTES:
1. COLOR PAINT FOR POST AND LUMINAIRE SHALL MATCH CITY OF NEW BERN GREEN. CONTACT CITY OF NEW BERN FOR SAMPLE OF PAINT.
2. ALL HARDWARE STAINLESS STEEL.
3. ALL EXTERIOR HARDWARE TAMPER RESISTANT.

POST HEIGHT : 9'-2"
BASE DIAMETER : 17" DIA.

PEDESTRIAN LIGHTING POLE BASE

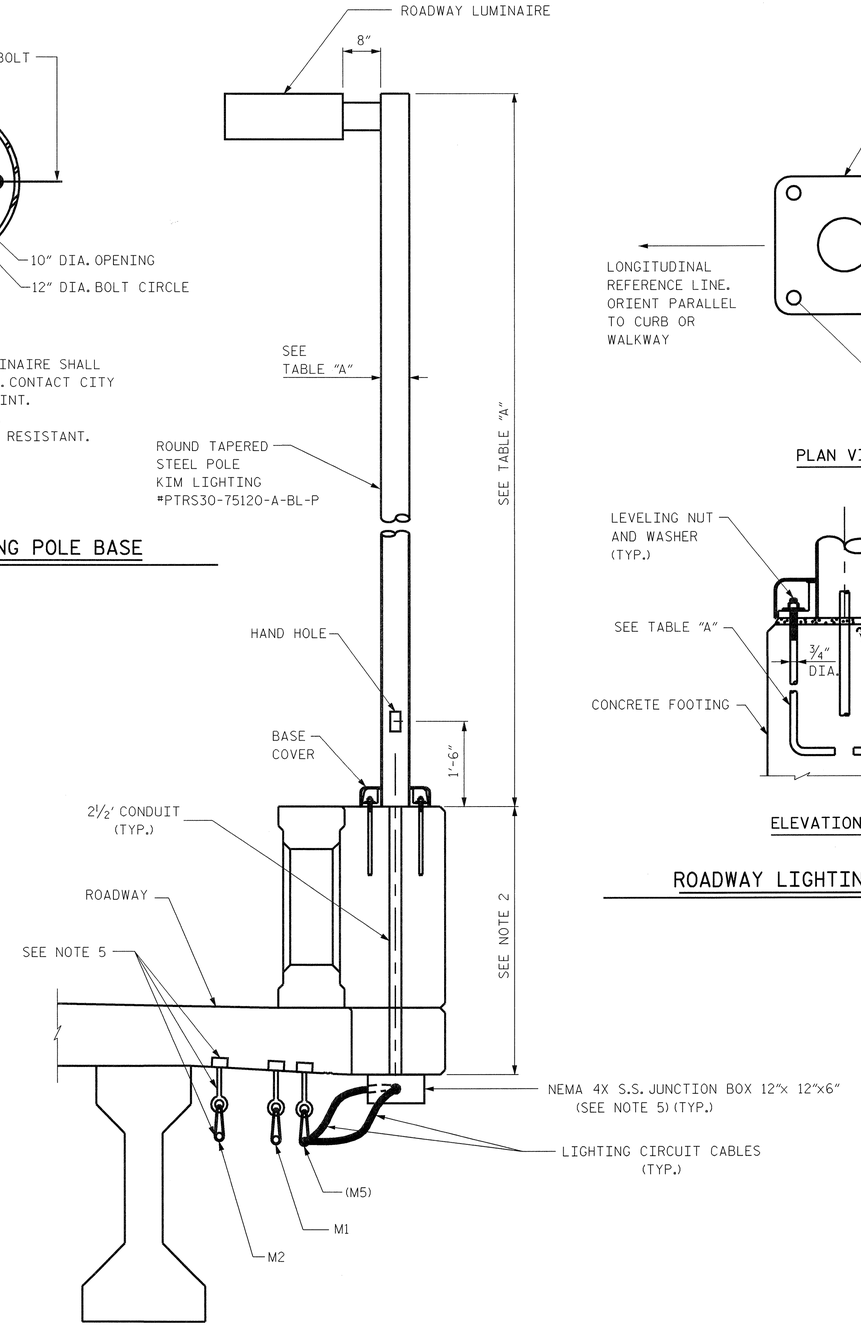

EAST SIDE

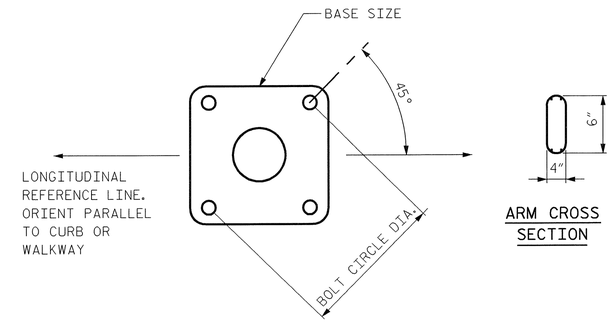

ARM CROSS SECTION

PLAN VIEW

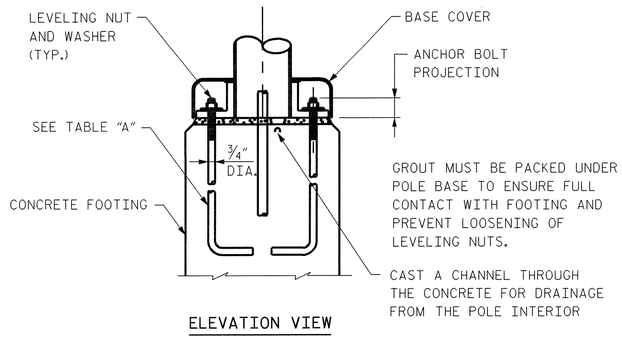

ELEVATION VIEW

ROADWAY LIGHTING POLE BASE

NOTES:

1. FOR LOCATIONS AND CONDUIT INSTALLATION, SEE ROADWAY ELECTRICAL PLANS, DWG. E-13 TO E-15.
2. FOR CONCRETE PEDESTALS, BOLT SPACING AND INSTALLATION, SEE DRAWING B190.
3. #8 AWG GROUND CONDUCTOR SHALL BE FURNISHED AND INSTALLED THROUGH THE MESSENGER CABLE SYSTEM AND BONDED TO ALL LIGHT POLES.
4. FOR LIGHTING SCHEDULES, NOTES, SYMBOLS AND ABBREVIATIONS, SEE DRAWING E-13.
5. SEE DRAWING E-18 FOR MESSENGER CABLES AND JUNCTION BOX DETAILS.
6. USE LIQUID TIGHT FITTINGS AT CABLE ENTRY TO JUNCTION BOXES.
7. LIGHTING CIRCUIT WIRING SHALL BE SPLICED ONLY IN JUNCTION BOXES.

ALLOWABLE POLE EPA

TABLE A

POLE CATALOG NUMBER	X	Y	BOLT CIRCLE DIA.	ANCHOR BOLT PROJECTION	ANCHOR BOLTS	BASE COVER SIZE	CONDUIT OPENING	WIND MAP STEADY WIND / GUSTING WIND EQUIVALENT 100/130
PTR530-7500	30'	7.5"x0.125"	10.5"	3.875"	1"x36"+4"	11" SQ.	6" DIA.	7.9

LEGEND:

(M4) MESSENGER CABLE DESIGNATION IN PARENTHESES INDICATES SOUTH SIDE OF BRIDGE.
M3 DESIGNATION WITHOUT PARENTHESES INDICATES NORTH SIDE OF BRIDGE.

NORTH CAROLINA PROFESSIONAL SEAL 031843 ENGINEER GREGORY S. BARON

PROJECT NO. B-2532
CRAVEN COUNTY
STATION: 31+21.29 -L-

STATE OF NORTH CAROLINA
DEPARTMENT OF TRANSPORTATION
RALEIGH, NC

ROADWAY LIGHTING DETAILS

HNTB NORTH CAROLINA, P.C.
343 E. Six Forks Rd., Suite 200, Raleigh, N.C. 27609

DRAWN BY WL DATE 10/20/06
CHECKED BY MS DATE 10/20/06
DWG. NO. E-17

REVISIONS						SHEET NO.
NO.	BY	DATE	NO.	BY	DATE	S-778
1			3			TOTAL SHEETS
2			4			348

Isberman AT FILD126
13:42:20 2006
Working Files for 100% submittal\B2532_E-LE (T-Rdwy lighting det.dgn

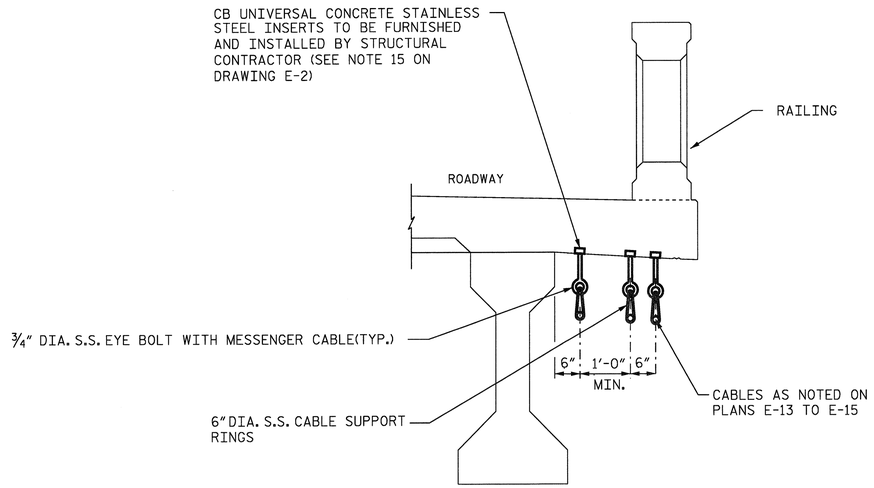

SECTION A-A

TYPICAL MESSENGER CABLE SYSTEM INSTALLATION DETAILS

NOTES:

1. FOR ELECTRICAL SYSTEM BLOCK DIAGRAM, SEE DRAWING E-4.
2. FOR LEGEND AND GENERAL NOTES, SEE DRAWINGS E-2 AND E-3.
3. FOR THE NUMBER, TYPE AND ROUTING OF CABLES, SEE DRAWINGS E-13 THROUGH E-15.
4. MAINTAIN 1 FT CLEARANCE BETWEEN TELEPHONE MESSENGER AND OTHERS MESSENGER CABLES.
5. SPACE INSERTS AND/OR EYEBOLTS NO FARTHER APART THAN 20 FT.
6. JUNCTION BOX JB SHALL BE MOUNTED TO THE BOTTOM OF THE CONCRETE DECK AT THE LOCATION SHOWN ON DRAWINGS TO FORM TRANSITION OF MESSENGER CABLE INTO CONDUIT ENTRY INTO THE LIGHT POLE PEDESTAL, SEE MOUNTING DETAILS THIS SHEET.
7. EYEBOLTS IN NEW CONCRETE SHALL BE THREADED INTO CAST-IN-PLACE STAINLESS STEEL INSERTS.

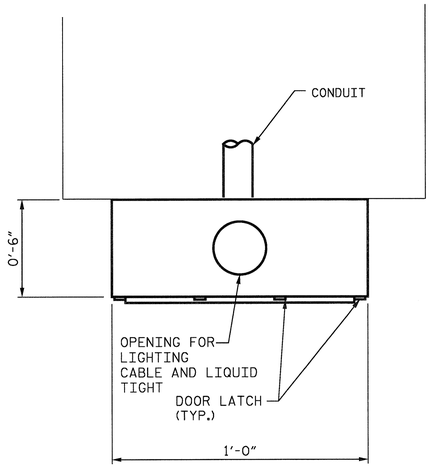

TYPICAL NEMA 4X S.S. JUNCTION BOX MOUNTING DETAIL

SIDE ELEVATION

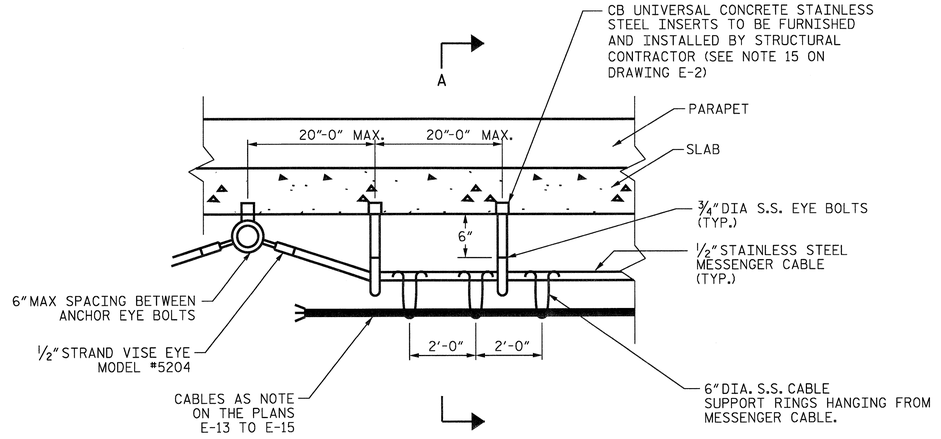

TYPICAL MESSENGER SYSTEM SUPPORT DETAILS

(MESSENGER SYSTEM TO BE INSTALLED CONTINUOUS FROM BACKWALL TO BACKWALL (EXCEPT AT MOVABLE SPAN)

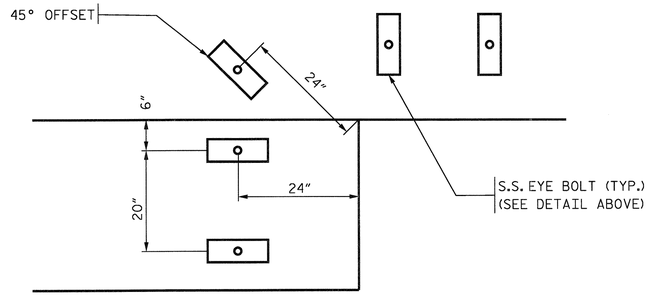

TYPICAL MESSENGER SYSTEM 90° TURN PLAN DETAIL

PROJECT NO. B-2532

CRAVEN COUNTY

STATION: 31+21.29 -L-

NORTH CAROLINA PROFESSIONAL ENGINEER SEAL 031843 GREGORY S. BARON 10/3/06

STATE OF NORTH CAROLINA
DEPARTMENT OF TRANSPORTATION
RALEIGH, NC

MESSENGER CABLE DETAILS

HNTB HNTB NORTH CAROLINA, P.C.
343 E. Six Forks Rd., Suite 200, Raleigh, N.C. 27609

DRAWN BY WL DATE 9/26/06
CHECKED BY MS DATE 9/26/06
DWG. NO. E-18

REVISIONS						SHEET NO.
NO.	BY	DATE	NO.	BY	DATE	S-2379
1			3			TOTAL SHEETS
2			4			348

Cadfile Date: 10/3/2006 11:47:38 AM
User: KFFLD103
Cadfile: K:\Projects\B2532\Working Files for 100% submittal\B2532_EL_E18_MsgrCable Det.dgn

STRUCTURE SCHEDULE

STRUCTURE DATA			LEFT POLE UPRIGHT DATA				RIGHT POLE UPRIGHT DATA				HORIZONTAL ARM DATA				BASE PLATE DATA				ANCHOR BOLT DATA		
QTY.	STR. NO.	SPAN	BASE DIA.	TOP DIA.	LENGTH	THK.	BASE DIA.	TOP DIA.	LENGTH	THK.	BASE DIA.	TOP DIA.	LENGTH	THK.	SQUARE	BOLT CIRCLE	THK.	BOLT HOLE	NO.	DIA.	LENGTH
1	NB1	41′-0″	10″	7.06″	21′-0″	0.18″	10″	7.06″	21′-0″	0.18″	10″	7.13″	20′-6″	0.18″	14′-0″	14″	0.18″	1.63″	4	1.25″	42″

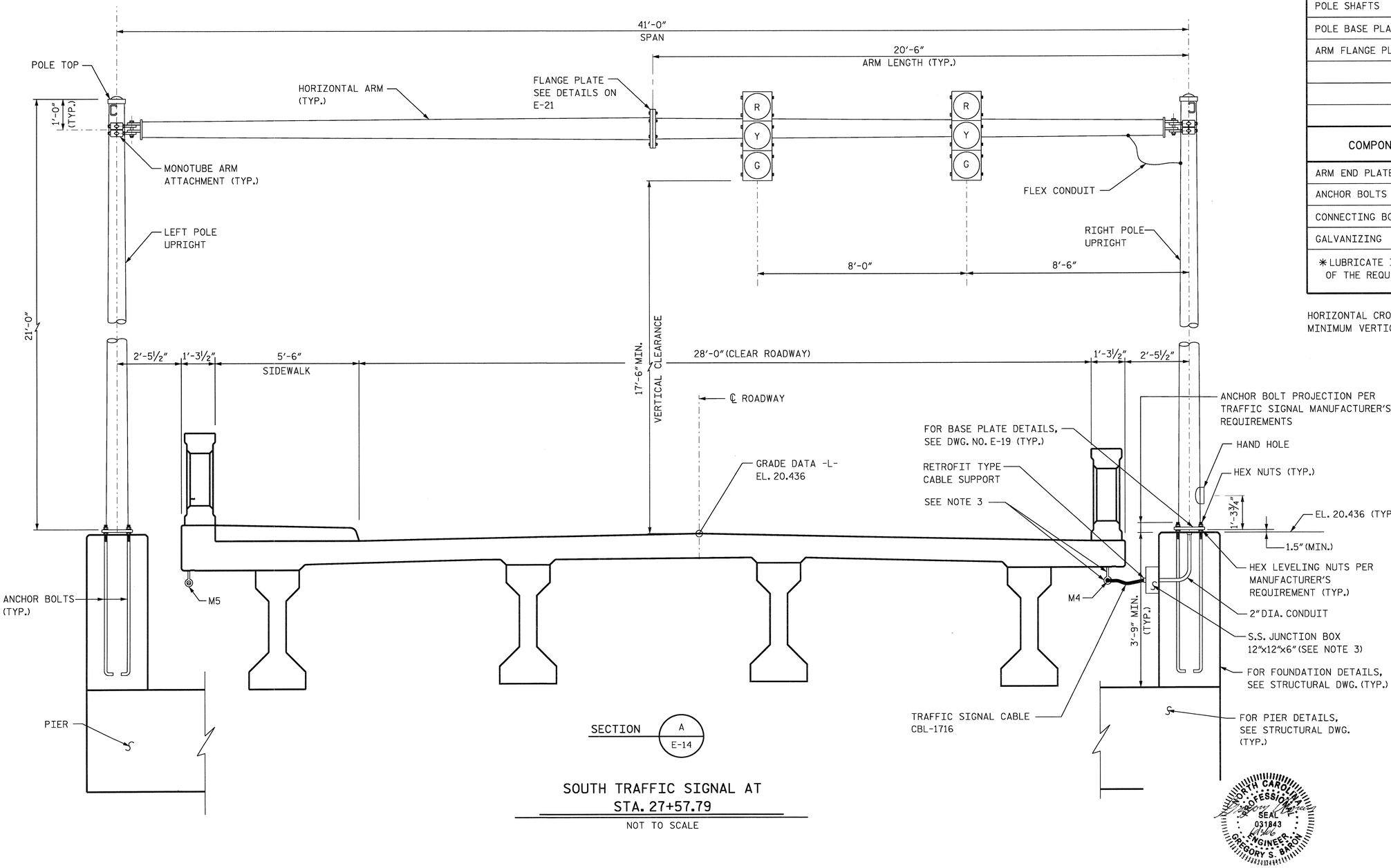

SECTION A / E-14

SOUTH TRAFFIC SIGNAL AT STA. 27+57.79

NOT TO SCALE

MATERIAL DATA		
COMPONENT	ASTM DESIGNATION	MIN. YIELD (KSI)
ARM SHAFTS	A595 GR. A	55
POLE SHAFTS	A595 GR. A	55
POLE BASE PLATE	A36	36
ARM FLANGE PLATE	A36	36

COMPONENT	ASTM DESIGNATION	MIN. YIELD (KSI)
ARM END PLATE & VANGS	A572	65
ANCHOR BOLTS	F 1554	55
CONNECTING BOLTS	A325 ✳	81
GALVANIZING	A123 & A153	--

✳LUBRICATE IN FIELD IF NECESSARY IN LIEU OF THE REQUIREMENTS IN A325.

HORIZONTAL CROSS BEAM CAMBERED TO PROVIDE MINIMUM VERTICAL CLEARANCE ABOVE ROADWAY

NOTES:

1. UNITS SHOULD BE MANUFACTURED IN ACCORDANCE WITH AASHTO STANDARD SPECIFICATIONS FOR STRUCTURAL SUPPORT FOR HIGHWAY SIGN, LUMINAIRE AND TRAFFIC SIGNAL.
2. MANUFACTURE SHOULD SUPPLY ALL HARDWARE WHICH IS NECESSARY FOR INSTALLATION AS WELL AS INSTRUCTIONS FOR INSTALLATION.
3. SEE DRAWING E-18 FOR MESSENGER CABLES AND JUNCTION BOX DETAIL.

PROJECT NO. B-2532

CRAVEN COUNTY

STATION: 31+21.29 -L-

STATE OF NORTH CAROLINA
DEPARTMENT OF TRANSPORTATION
RALEIGH, NC

SOUTH TRAFFIC SIGNAL DETAILS

NORTH CAROLINA PROFESSIONAL ENGINEER SEAL 031843 GREGORY S. BARON

HNTB HNTB NORTH CAROLINA, P.C.
343 E. Six Forks Rd., Suite 200, Raleigh, N.C. 27609

DRAWN BY WL DATE 9/26/06
CHECKED BY MS DATE 9/26/06
DWG. NO. E-19

REVISIONS						SHEET NO.
NO.	BY	DATE	NO.	BY	DATE	S-280
1			3			TOTAL SHEETS
2			4			348

tpatridge 4F FTLD103
09/27/2006 14:05
U:\FY-4057\3a1\Working Files for 100% submittal\B2532_E_E19_NB Traffic sig.dgn

STRUCTURE SCHEDULE

STRUCTURE DATA			LEFT POLE UPRIGHT DATA				RIGHT POLE UPRIGHT DATA				HORIZONTAL ARM DATA				BASE PLATE DATA				ANCHOR BOLT DATA		
QTY.	STR. NO.	SPAN	BASE DIA.	TOP DIA.	LENGTH	THK.	BASE DIA.	TOP DIA.	LENGTH	THK.	BASE DIA.	TOP DIA.	LENGTH	THK.	SQUARE	BOLT CIRCLE	THK.	BOLT HOLE	NO.	DIA.	LENGTH
1	SB1	41'-0"	10"	7.06"	21'-0"	0.18"	10"	7.06"	21'-0"	0.18"	10"	7.13"	20'-6"	0.18"	14'-0"	14"	0.18"	1.63"	4	1.25"	42"

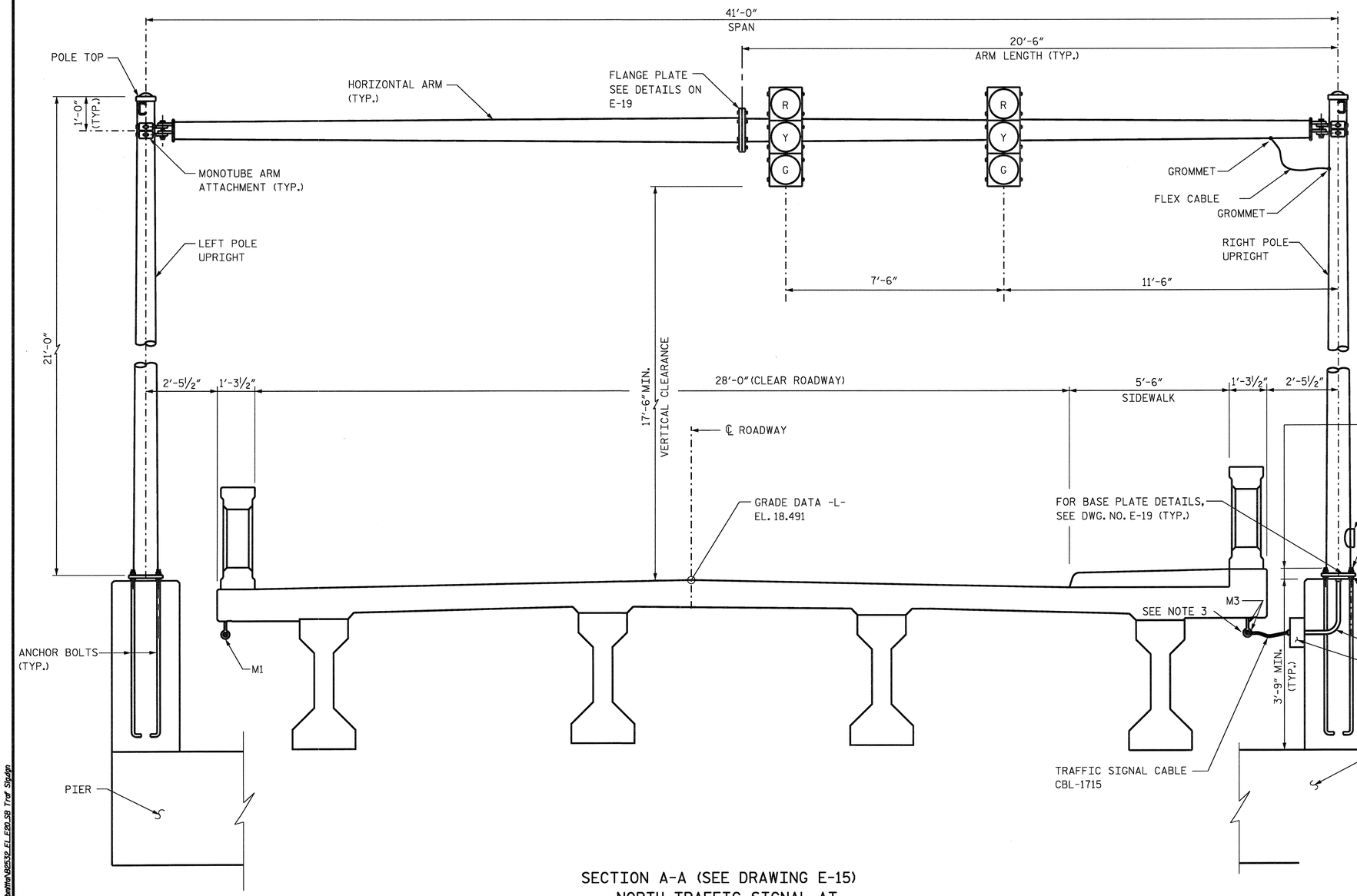

SECTION A-A (SEE DRAWING E-15)
NORTH TRAFFIC SIGNAL AT
STA. 34+39.79
NOT TO SCALE

MATERIAL DATA

COMPONENT	ASTM DESIGNATION	MIN. YIELD (KSI)
ARM SHAFTS	A595 GR. A	55
POLE SHAFTS	A595 GR. A	55
POLE BASE PLATE	A36	36
ARM FLANGE PLATE	A36	36

COMPONENT	ASTM DESIGNATION	MIN. YIELD (KSI)
ARM END PLATE & VANGS	A572	65
ANCHOR BOLTS	F 1554	55
CONNECTING BOLTS	A325 *	81
GALVANIZING	A123 & A153	--

*LUBRICATE IN FIELD IF NECESSARY IN LIEU OF THE REQUIREMENTS IN A325.

HORIZONTAL CROSS BEAM CAMBERED TO PROVIDE MINIMUM VERTICAL CLEARANCE ABOVE ROADWAY

NOTES:

1. UNITS SHOULD BE MANUFACTURED IN ACCORDANCE WITH ASSHTO STANDARD SPECIFICATIONS FOR STRUCTURAL SUPPORT FOR HIGHWAY SIGN, LUMINAIRE AND TRAFFIC SIGNAL.
2. MANUFACTURE SHOULD SUPPLY ALL HARDWARE WHICH IS NECESSARY FOR INSTALLATION AS WELL AS INSTRUCTIONS FOR INSTALLATION.
3. SEE DRAWING E-18 FOR MESSENGER CABLES AND JUNCTION BOX DETAIL.

PROJECT NO. B-2532
CRAVEN COUNTY
STATION: 31+21.29 -L-

STATE OF NORTH CAROLINA
DEPARTMENT OF TRANSPORTATION
RALEIGH, NC

NORTH TRAFFIC SIGNAL DETAILS

NORTH CAROLINA PROFESSIONAL SEAL 031843 ENGINEER GREGORY S. BARON

HNTB HNTB NORTH CAROLINA, P.C.
343 E. Six Forks Rd., Suite 200, Raleigh, N.C. 27609

DRAWN BY WL DATE 9/26/06
CHECKED BY MS DATE 9/26/06
DWG. NO. E-20

REVISIONS						SHEET NO.
NO.	BY	DATE	NO.	BY	DATE	S-231
1			3			TOTAL SHEETS
2			4			348

tgallagher AT FFLD103
05-SEP-2006 14:26
U:\FFLD\Projects\Working Files for 100% submittal\B2532_EI_E20_SB Trnf Stydgn

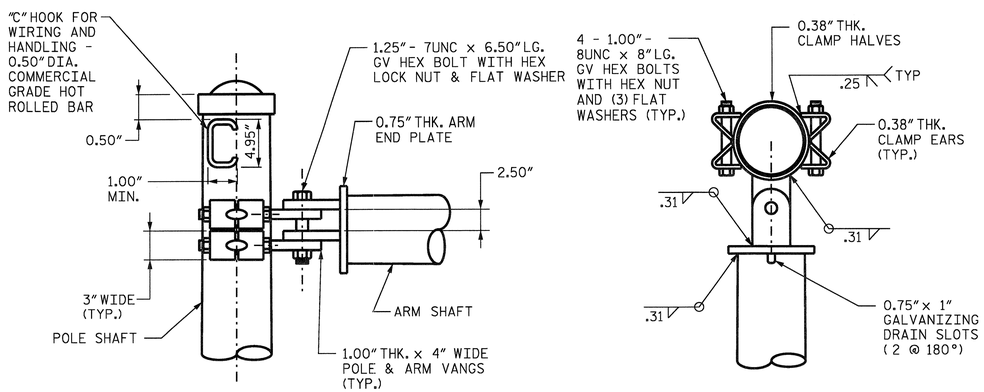

ELEVATION VIEW

TOP VIEW

MONOTUBE ARM CLAMP & POLE TOP DETAIL

NOT TO SCALE

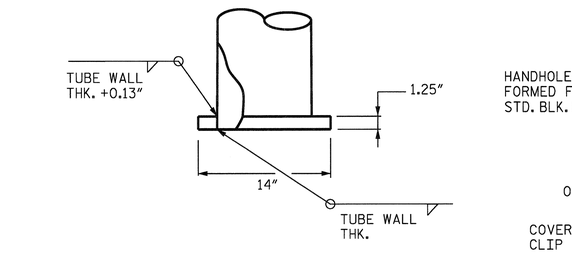

ELEVATION VIEW

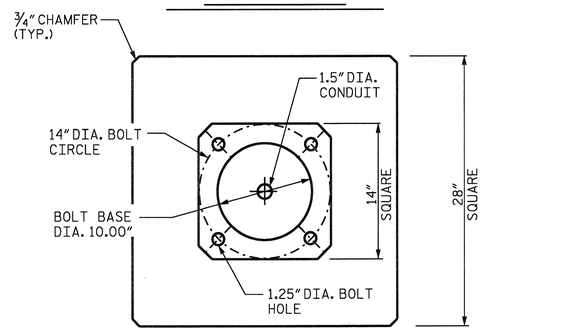

TOP VIEW

GROUNDING LUG WILL BE LOCATED 180° FROM HAND HOLE RIM.

POLE BASE DETAIL

NOT TO SCALE

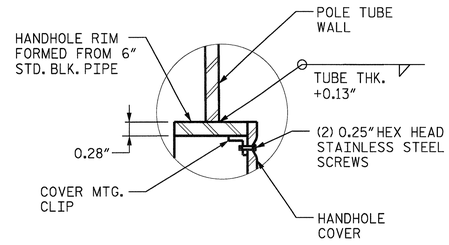

SECTION A-A

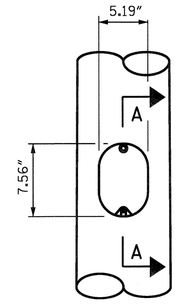

ELEVATION VIEW

HANDHOLE DETAIL

NOT TO SCALE

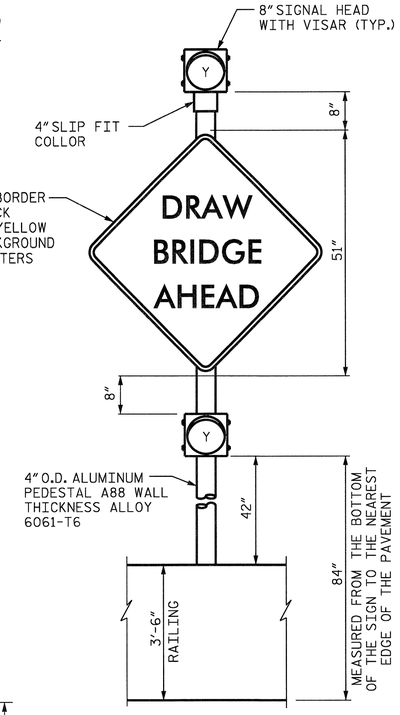

SIGN DETAIL

NOT TO SCALE

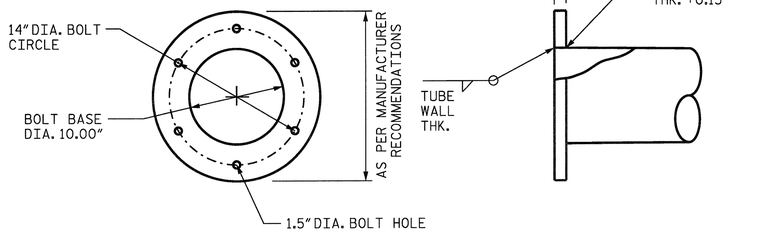

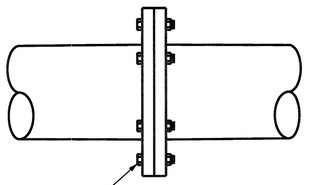

ELEVATION VIEW

FLANGE PLATE DETAIL

NOT TO SCALE

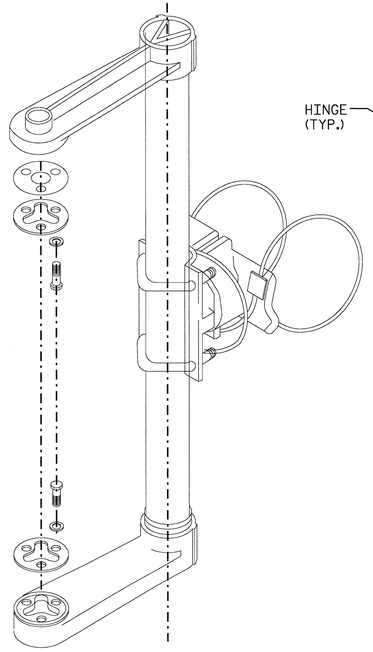

ONE WAY SIGNAL HEAD BRACKET ASSEMBLY

NOT TO SCALE

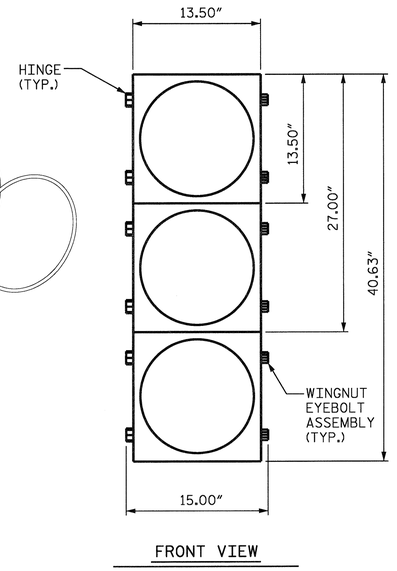

FRONT VIEW

ONE WAY TRAFFIC SIGNAL HEAD LAMP

NOT TO SCALE

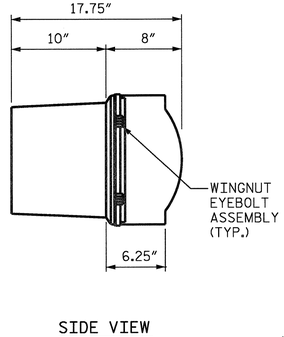

SIDE VIEW

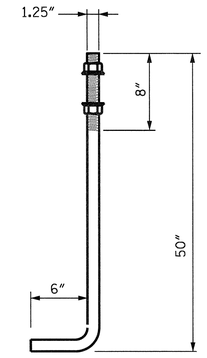

(4) ANCHOR BOLTS WITH (2) HEX NUTS AND (2) WASHERS PER BOLT WITH THREADED END GALVANIZED AT LEAST 8"

ANCHOR BOLT DETAIL

NOT TO SCALE

* ALL HARDWARE SHOWN SHALL BE PROVIDED BY THE MANUFACTURER.

PROJECT NO. B-2532

CRAVEN COUNTY

STATION: 31+21.29 -L-

STATE OF NORTH CAROLINA
DEPARTMENT OF TRANSPORTATION
RALEIGH, NC

MISCELLANEOUS TRAFFIC SIGNAL DETAILS

HNTB NORTH CAROLINA, P.C.
343 E. Six Forks Rd., Suite 200, Raleigh, N.C. 27609

DRAWN BY WL DATE 9/26/06
CHECKED BY MS DATE 9/26/06
DWG. NO. E-21

REVISIONS						SHEET NO.
NO.	BY	DATE	NO.	BY	DATE	S-282
1			3			TOTAL SHEETS
2			4			348

NORTH CAROLINA PROFESSIONAL SEAL 031843 ENGINEER GREGORY S. BARON

fpotthoff@hntb.com AT_FILD103
D:\FFD\E21.dgn
UNFF4057a (Working Files for 100% submittal\B2532_FI_E21_trafflo sig detail.dgn

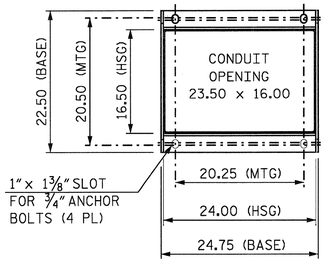

SECTION A-A

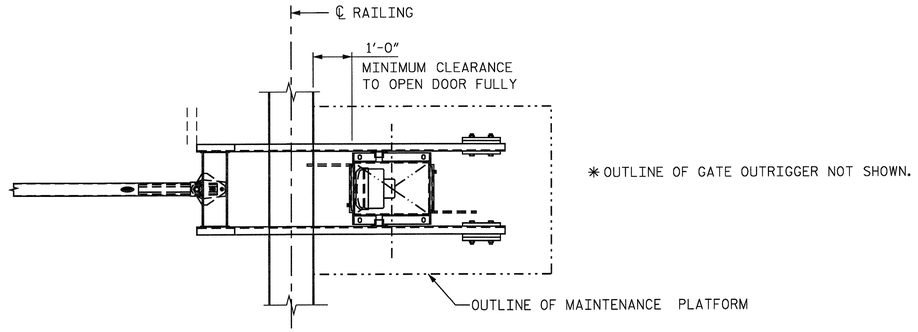

PLAN C-C

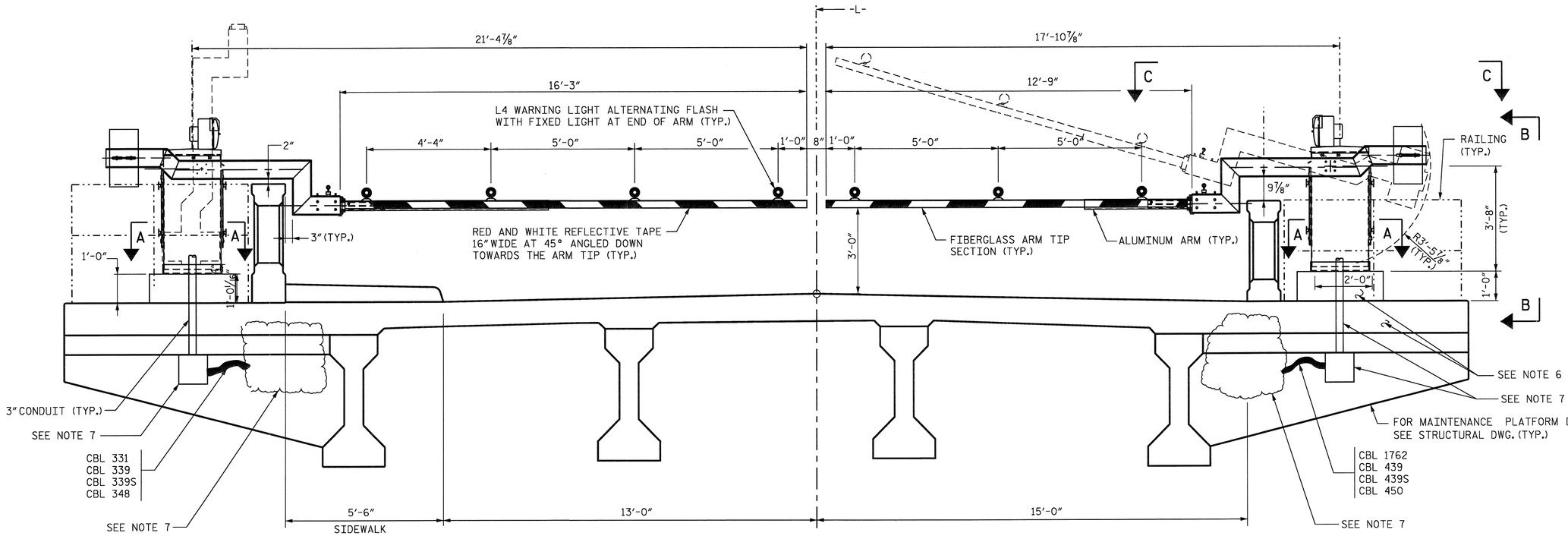

ELEVATION B-B

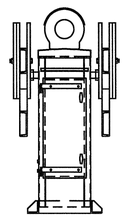

NOTES:

1. GATES SHOWN ARE TYPICAL FOR BOTH TRAFFIC GATE INSTALLATION.
2. INSTALLATION AND MOUNTING HARDWARE SHALL BE AS PER MANUFACTURER'S RECOMMENDATIONS.
3. SEE STRUCTURAL PLANS FOR DETAILS ON PIER, APPROACH, ROADWAY, AND GATE PAD.
4. ALL GATE HARDWARE SHALL BE STAINLESS STEEL.
5. THE CONTRACTOR SHALL VERIFY/ADJUST ARM LENGTH AND OFFSET SIDE ARM CHANNELS ACCORDING TO FINAL ROAD DIMENSIONS AND RAILING CLEARANCES FOR EACH GATE LOCATION. FINAL DIMENSIONS SHALL BE SUBMITTED IN SHOP DRAWINGS FOR APPROVAL BY THE ENGINEER.
6. ELECTRICAL CONTRACTOR SHALL COORDINATE WITH STRUCTURAL FOR THE FOUNDATION & PLATFORM OF THE GATES.
7. SEE DRAWINGS E-16 AND E-18 FOR DETAILS.
8. GONGS SHALL BE PROVIDED ON BOTH ONCOMING WARNING GATES.
9. GATE BASE ELEVATIONS ARE 19.97 FOR BOTH NORTH GATES AND 21.7 FOR BOTH SOUTH.

SECTION D / E-15

WARNING GATE ELEVATION

PROJECT NO. B-2532

CRAVEN COUNTY

STATION: 31+21.29 -L-

STATE OF NORTH CAROLINA
DEPARTMENT OF TRANSPORTATION
RALEIGH, NC

WARNING GATE DETAILS

NORTH CAROLINA PROFESSIONAL SEAL 031843 ENGINEER GREGORY S. BARON

HNTB HNTB NORTH CAROLINA, P.C.
343 E. Six Forks Rd., Suite 200, Raleigh, N.C. 27609

DRAWN BY WL DATE 9/26/06
CHECKED BY ALB DATE 9/26/06
DWG. NO. E-22

REVISIONS						SHEET NO.
NO.	BY	DATE	NO.	BY	DATE	S-232
1			3			TOTAL SHEETS
2			4			348

rpotchenpa
09/27/2006 14:07
\\Nt-fs01\Working Files for 100% submittal\B2532_FI_E22_warn gate detail

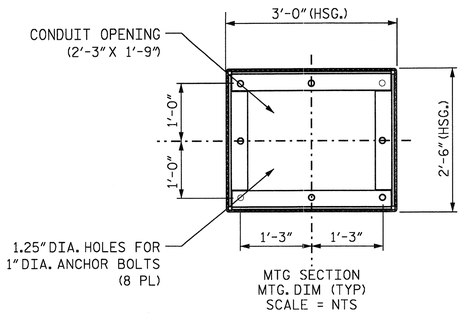

SECTION A-A

NOT TO SCALE

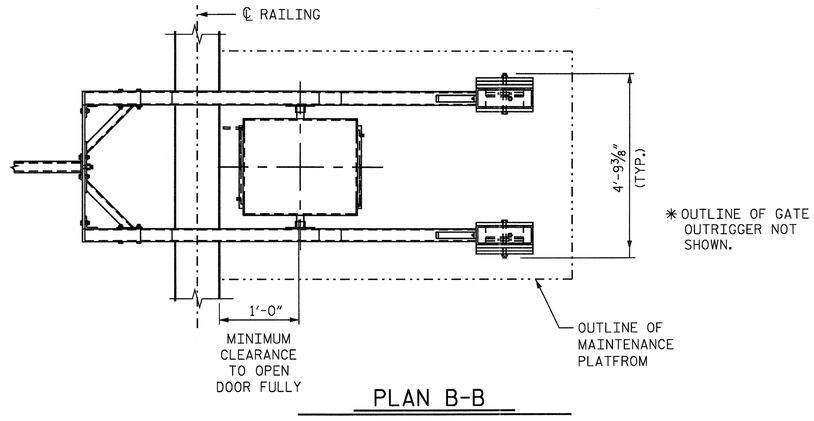

PLAN B-B

NOT TO SCALE

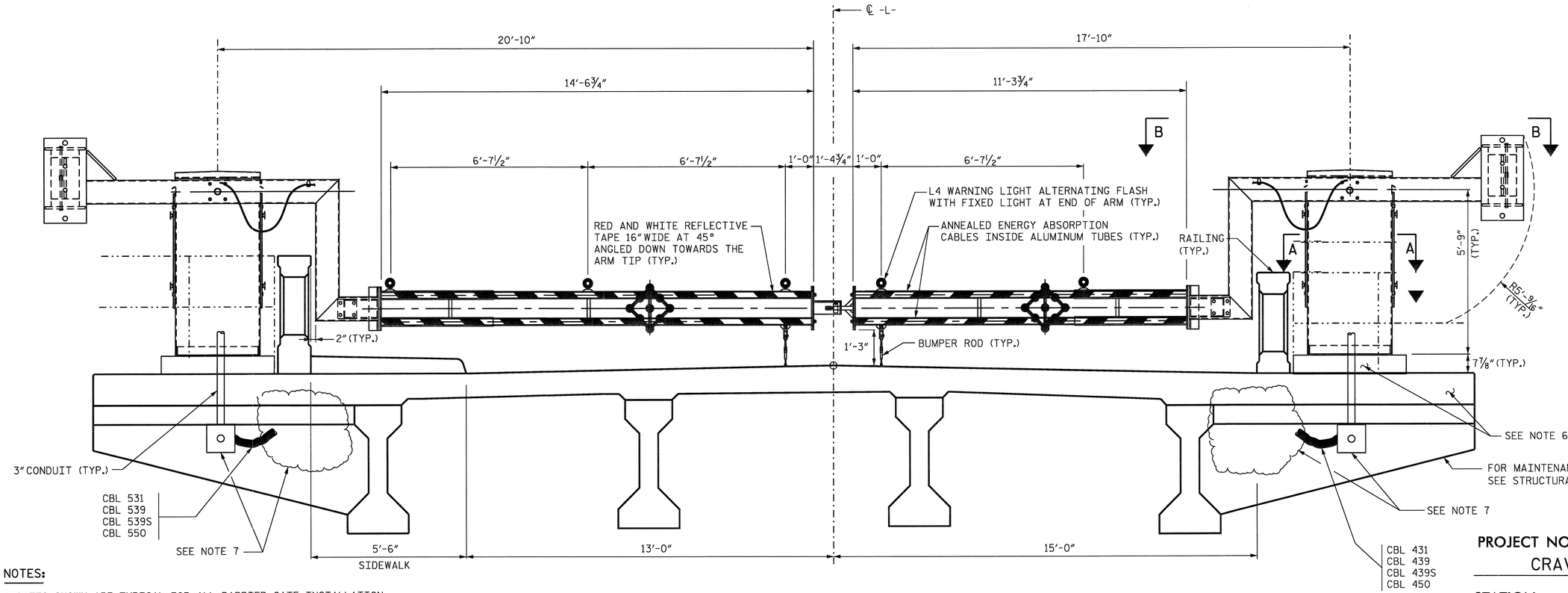

SECTION C / E-15

BARRIER GATE ELEVATION

NOT TO SCALE

NOTES:

1. GATES SHOWN ARE TYPICAL FOR ALL BARRIER GATE INSTALLATION.
2. INSTALLATION AND MOUNTING HARDWARE SHALL BE AS PER MANUFACTURER'S RECOMMENDATIONS.
3. SEE STRUCTURAL PLANS FOR DETAILS ON PIER, APPROACH, ROADWAY, AND GATE PAD.
4. ALL GATE HARDWARE SHALL BE STAINLESS STEEL.
5. THE CONTRACTOR SHALL VERIFY/ADJUST ARM LENGTH AND OFFSET SIDE ARM CHANNELS ACCORDING TO FINAL ROAD DIMENSIONS AND RAILING CLEARANCE FOR EACH GATE LOCATION. FINAL DIMENSIONS SHALL BE SUBMITTED IN SHOP DRAWINGS FOR APPROVAL BY THE ENGINEER.
6. ELECTRICAL CONTRACTOR SHALL COORDINATE WITH STRUCTURAL FOR THE FOUNDATION & PLATFORM OF THE GATES.
7. SEE DRAWINGS E-16 AND E-18 FOR DETAILS.
8. GATE BASE ELEVATIONS ARE 21.55 FOR BOTH NORTH GATES AND 21.98 FOR BOTH SOUTH.

PROJECT NO. B-2532

CRAVEN COUNTY

STATION: 31+21.29 -L-

STATE OF NORTH CAROLINA
DEPARTMENT OF TRANSPORTATION
RALEIGH, NC

BARRIER GATE DETAILS

NORTH CAROLINA PROFESSIONAL SEAL 031843 ENGINEER GREGORY S. BARON

HNTB HNTB NORTH CAROLINA, P.C.
343 E. Six Forks Rd., Suite 200, Raleigh, N.C. 27609

DRAWN BY WL DATE 9/26/06
CHECKED BY ALB DATE 9/26/06
DWG. NO. E-23

REVISIONS						SHEET NO.
NO.	BY	DATE	NO.	BY	DATE	S-294
1			3			TOTAL SHEETS
2			4			348

Contractor, PE FFLD103
10/30/2006 14:11
U:\FF4857\a\Working Files for 100% submittal\B2532_EL_E23_rss bar gate det.dgn

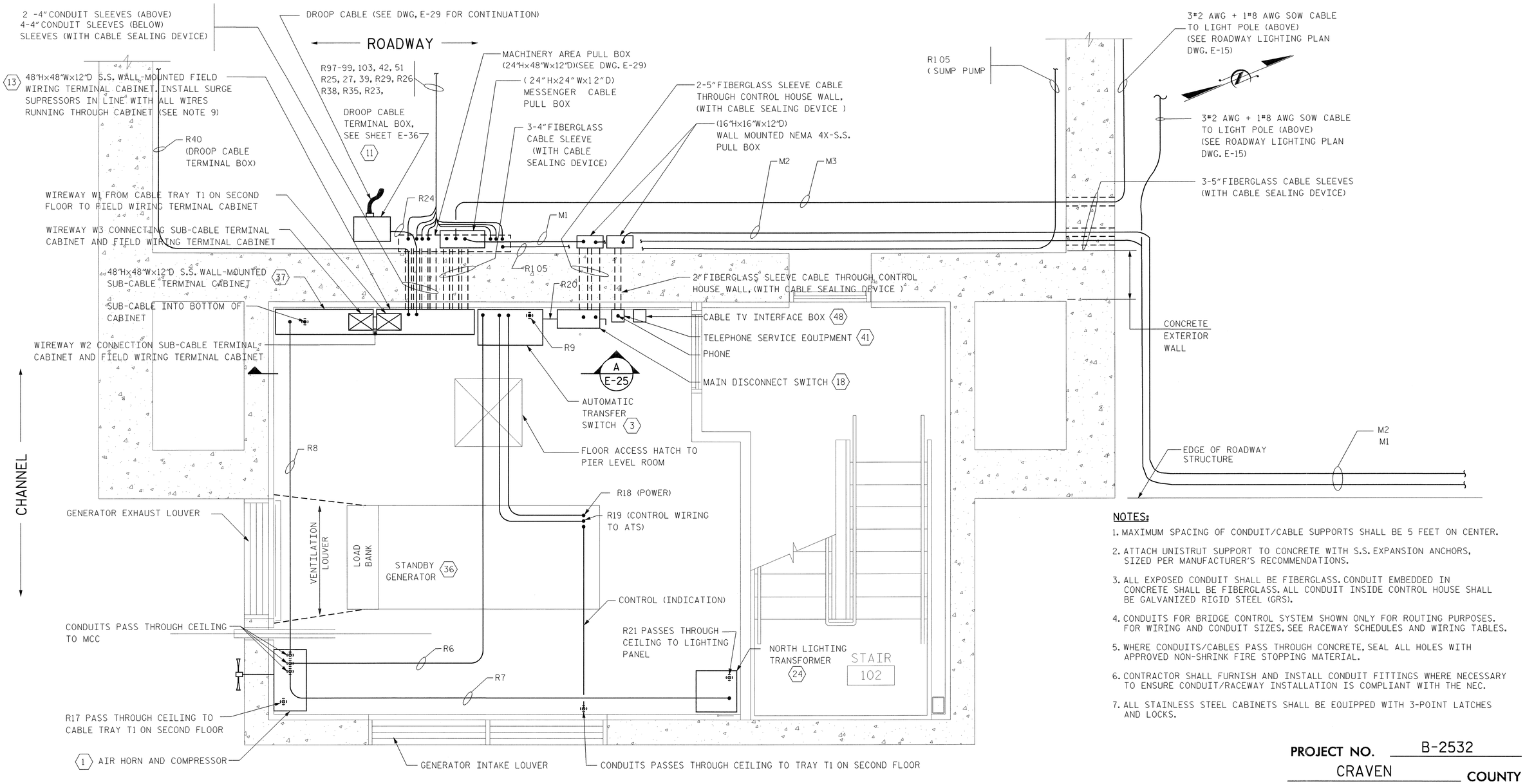

GENERATOR ROOM - 1 ST FLOOR

NOTES:

1. MAXIMUM SPACING OF CONDUIT/CABLE SUPPORTS SHALL BE 5 FEET ON CENTER.
2. ATTACH UNISTRUT SUPPORT TO CONCRETE WITH S.S. EXPANSION ANCHORS, SIZED PER MANUFACTURER'S RECOMMENDATIONS.
3. ALL EXPOSED CONDUIT SHALL BE FIBERGLASS. CONDUIT EMBEDDED IN CONCRETE SHALL BE FIBERGLASS. ALL CONDUIT INSIDE CONTROL HOUSE SHALL BE GALVANIZED RIGID STEEL (GRS).
4. CONDUITS FOR BRIDGE CONTROL SYSTEM SHOWN ONLY FOR ROUTING PURPOSES. FOR WIRING AND CONDUIT SIZES, SEE RACEWAY SCHEDULES AND WIRING TABLES.
5. WHERE CONDUITS/CABLES PASS THROUGH CONCRETE, SEAL ALL HOLES WITH APPROVED NON-SHRINK FIRE STOPPING MATERIAL.
6. CONTRACTOR SHALL FURNISH AND INSTALL CONDUIT FITTINGS WHERE NECESSARY TO ENSURE CONDUIT/RACEWAY INSTALLATION IS COMPLIANT WITH THE NEC.
7. ALL STAINLESS STEEL CABINETS SHALL BE EQUIPPED WITH 3-POINT LATCHES AND LOCKS.

LEGEND:

——	CONDUIT PATH (FOR CONDUIT SIZE, SEE RACEWAY SCHEDULE)
•	CONDUIT TURNS DOWN FROM HORIZONTAL ROUTE
◦	CONDUIT TURNS UP FROM HORIZONTAL ROUTE
◎ OR ◉	CONDUIT PASSES THROUGH FLOOR
⦶	CONDUIT PASSES THROUGH CEILING
⊠ OR ⊠	WIREWAY PASSES THROUGH CEILING OR FLOOR
▼	TELEPHONE JACK

8. LIGHTING, INTERCOM, HVAC, AND FIRE ALARM INSTALLATIONS ARE NOT SHOWN FOR CLARITY. CONTRACTOR SHALL COORDINATE ALL INSTALLATIONS IN THE FIELD. LOCATIONS ARE SHOWN ON OTHER DRAWINGS.
9. ALL WIRING RUNNING THROUGH THE FIELD WIRING TERMINAL CABINET TO FIELD DEVICES SHALL BE PROTECTED BY SURGE SUPRESSORS AND TERMINATED IN THE CABINET ON TERMINAL BLOCKS. TERMINATIONS SHALL BE LABELED AND AS-BUILT TERMINATION DRAWINGS SHALL BE SUBMITTED AT COMPLETION OF PROJECT.
10. CONTRACTOR SHALL COORDINATE THE INSTALLATION OF THE GENERATOR THROUGH THE EXHAUST LOUVER AND VERIFY DIMENSION BASED ON APPROVED SHOP DRAWINGS.
11. THE GENERATOR LOUVERS SHALL BE INTERCONNECTED WITH GENERATOR TO OPEN WHEN GENERATOR IS RUNNING. LOUVERS SHALL BE SPRING-OPEN/POWER TO CLOSE TYPE OPERATION.
12. FURNISH AND INSTALL MESSENGER CABLE MOUNTING SUPPORT, SEE DWG. E-17 FOR DETAIL.

PROJECT NO. B-2532
CRAVEN COUNTY
STATION: 31+21.29 -L-

STATE OF NORTH CAROLINA
DEPARTMENT OF TRANSPORTATION
RALEIGH, NC

CONTROL HOUSE GENERATOR ROOM EQUIPMENT PLAN

NORTH CAROLINA PROFESSIONAL SEAL 031843 ENGINEER GREGORY S. BARON

HNTB NORTH CAROLINA, P.C.
343 E. Six Forks Rd., Suite 200, Raleigh, N.C. 27609

DRAWN BY FG DATE 10/20/06
CHECKED BY CMC DATE 10/20/06
DWG. NO. E-24

REVISIONS						SHEET NO.
NO.	BY	DATE	NO.	BY	DATE	S-132
1			3			TOTAL SHEETS
2			4			348

jsarmen
10/20/2006 M:\Roadway Files for 1102L submittal\B2532_EL_E24.dgn house 1st flr plan.dgn

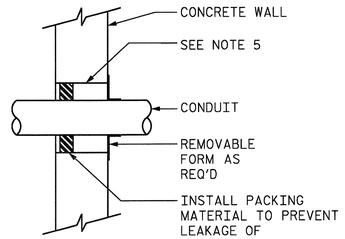

CONCRETE WALL TRANSITION DETAIL

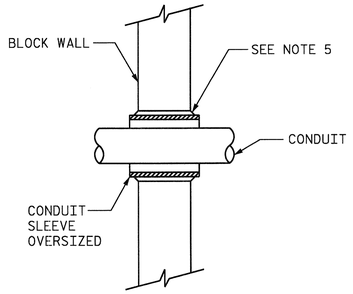

CONCRETE WALL TRANSITION DETAIL

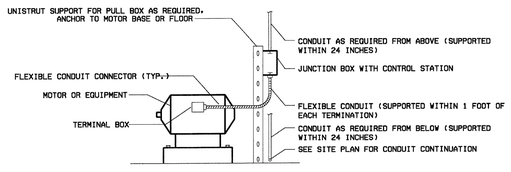

TYPICAL MOTOR CONNECTION DETAIL

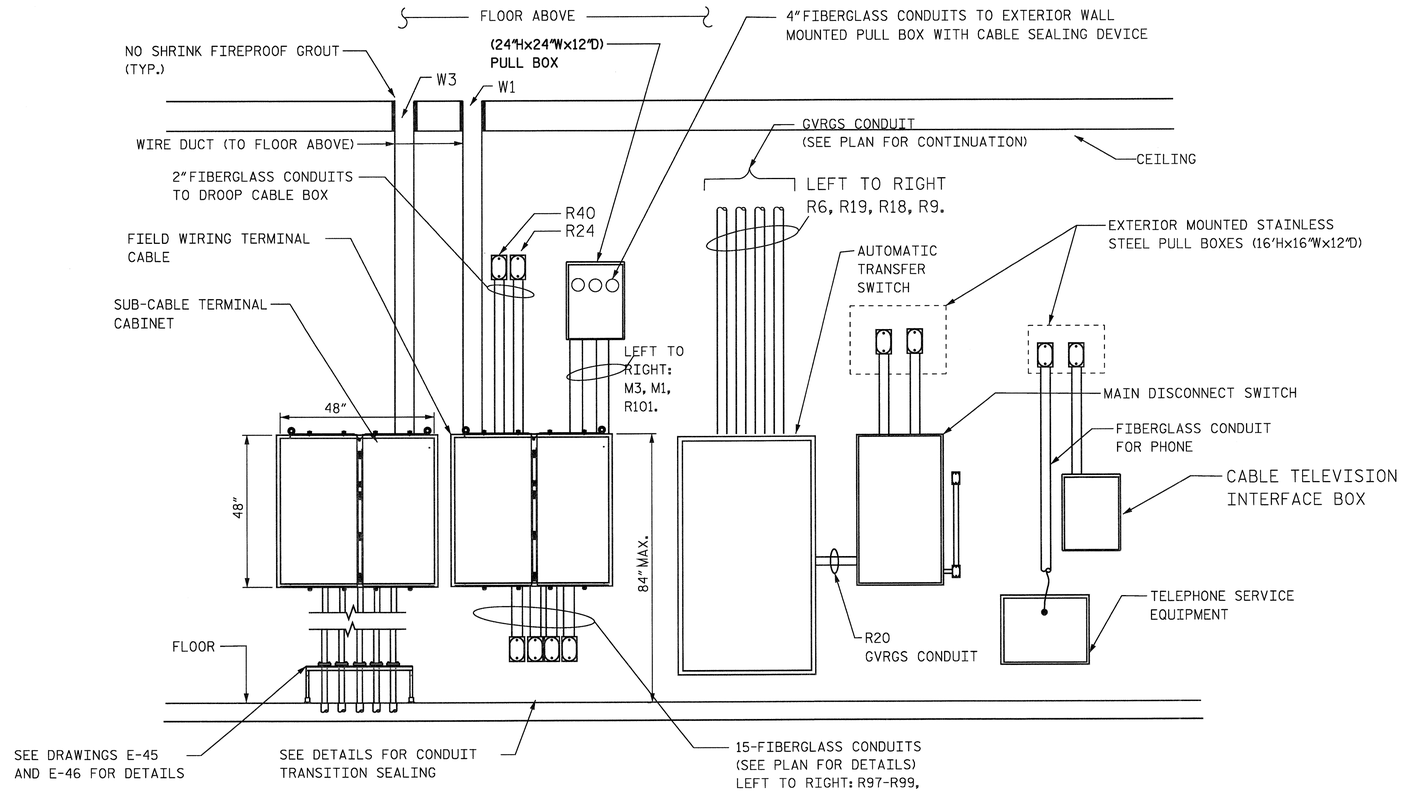

ELEVATION "A"

NOTES:

1. MAXIMUM SPACING OF CONDUIT/CABLE SUPPORTS SHALL BE 5 FEET ON CENTER.
2. ATTACH UNISTRUT SUPPORT TO CONCRETE WITH S.S. EXPANSION ANCHORS, SIZED PER MANUFACTURER'S RECOMMENDATIONS.
3. ALL EXPOSED CONDUIT SHALL BE FIBERGLASS. CONDUIT EMBEDDED IN CONCRETE SHALL BE FIBERGLASS. ALL CONDUIT INSIDE CONTROL HOUSE SHALL BE GALVANIZED RIGID STEEL (GRS).
4. CONDUITS FOR BRIDGE CONTROL SYSTEM SHOWN ONLY FOR ROUTING PURPOSES. FOR WIRING AND CONDUIT SIZES, SEE RACEWAY SCHEDULES AND WIRING TABLES.
5. WHERE CONDUITS/CABLES PASS THROUGH CONCRETE, SEAL ALL HOLES WITH APPROVED NON-SHRINK FIRE STOPPING MATERIAL.
6. CONTRACTOR SHALL FURNISH AND INSTALL CONDUIT FITTINGS WHERE NECESSARY TO ENSURE CONDUIT/RACEWAY INSTALLATION IS COMPLIANT WITH THE NEC.
7. ALL STAINLESS STEEL CABINETS SHALL BE EQUIPPED WITH 3-POINT LATCHES AND LOCKS.
8. LIGHTING, INTERCOM, HVAC, AND FIRE ALARM INSTALLATIONS SHOWN ON LIGHTING PLANS. CONTRACTOR SHALL COORDINATE ALL INSTALLATIONS IN THE FIELD.
9. ALL WIRING RUNNING THROUGH THE FIELD WIRING TERMINAL CABINET TO FIELD DEVICES SHALL BE PROTECTED BY SURGE SUPRESSORS AND TERMINATED IN THE CABINET ON TERMINAL BLOCKS. TERMINATIONS SHALL BE LABELED AND AS-BUILT TERMINATION DRAWINGS SHALL BE SUBMITTED AT COMPLETION OF PROJECT.
10. CAST PVC OR FIBERGLASS SLEEVES INTO WALLS AND FLOORS FOR PASSAGE OF CONDUIT AND CABLES.

PROJECT NO. B-2532

CRAVEN COUNTY

STATION: 31+21.29 -L-

NORTH CAROLINA PROFESSIONAL SEAL 031843 ENGINEER GREGORY S. BARON

STATE OF NORTH CAROLINA
DEPARTMENT OF TRANSPORTATION
RALEIGH, NC

CONTROL HOUSE GENERATOR ROOM SECTIONS AND DETAILS

HNTB HNTB NORTH CAROLINA, P.C.
343 E. Six Forks Rd., Suite 200, Raleigh, N.C. 27609

DRAWN BY FG DATE 9/26/06
CHECKED BY CMC DATE 9/26/06
DWG. NO. E-25

REVISIONS						SHEET NO.
NO.	BY	DATE	NO.	BY	DATE	S-286
1			3			TOTAL SHEETS
2			4			348

Configuration: AT_FTLD103
Date: 9/26/2006 4:44:44 PM
User: fgarrison
Plotted: U:\AT-FTLD\Working Files for 100% submittal\B2532_FL_E25_Cont house 1st flr elevations.dgn

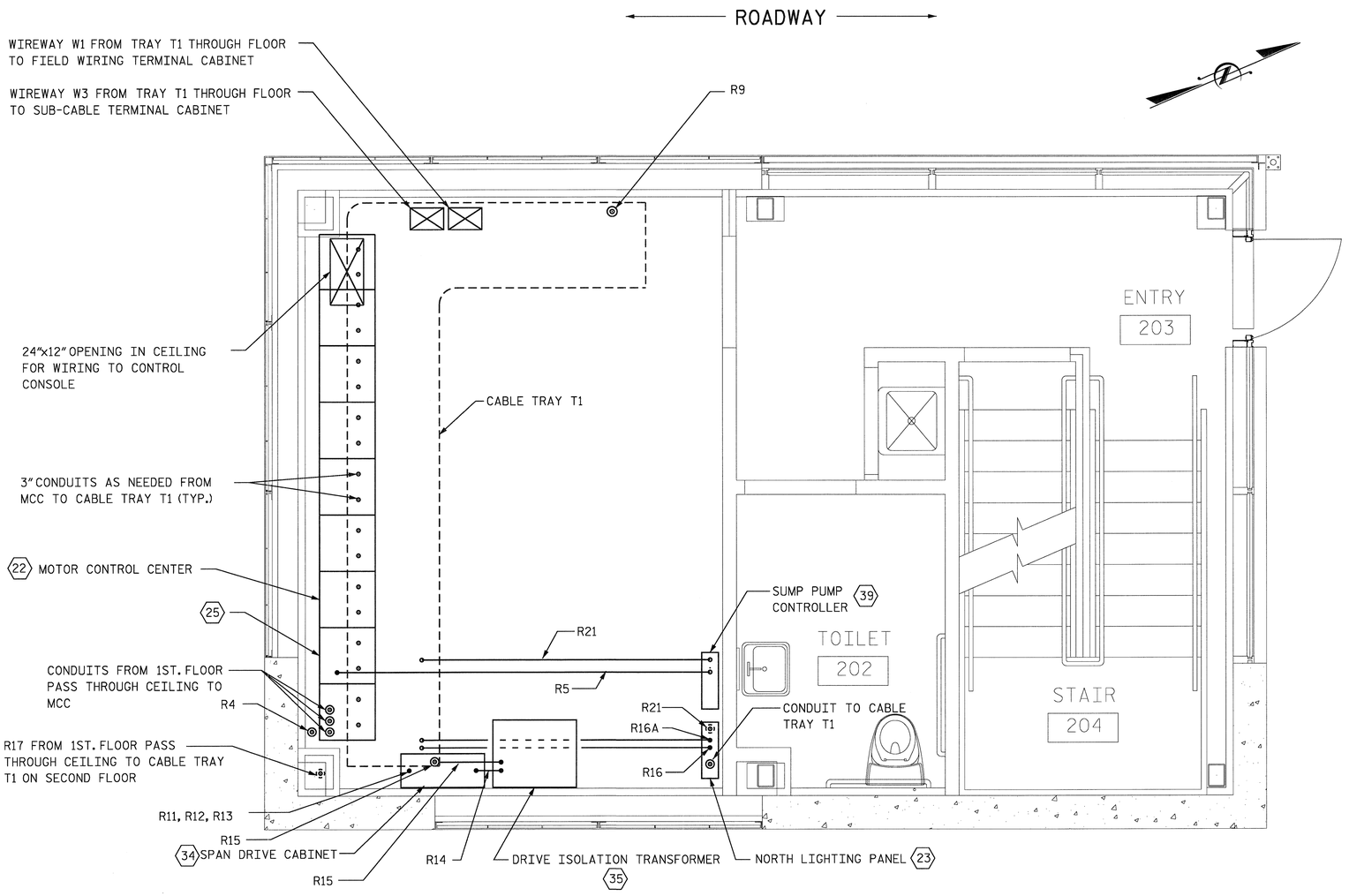

ENTRY LEVEL - 2ND FLOOR

LEGEND:

——	CONDUIT PATH (FOR CONDUIT SIZE, SEE RACEWAY SCHEDULE, SHEET E108-109)
•	CONDUIT TURNS DOWN FROM HORIZONTAL ROUTE
◦	CONDUIT TURNS UP FROM HORIZONTAL ROUTE
◎ OR ◉	CONDUIT PASSES THROUGH FLOOR
⦾	CONDUIT PASSES THROUGH CEILING
⊠ OR ⊠	WIREWAY PASSES THROUGH CEILING OR FLOOR
▼	TELEPHONE JACK

NOTES:

1. MAXIMUM SPACING OF CONDUIT/CABLE SUPPORTS SHALL BE 5 FEET ON CENTER.
2. ATTACH UNISTRUT SUPPORT TO CONCRETE WITH S.S. EXPANSION ANCHORS, SIZED PER MANUFACTURER'S RECOMMENDATIONS.
3. ALL EXPOSED CONDUIT SHALL BE FIBERGLASS. CONDUIT EMBEDDED IN CONCRETE SHALL BE FIBERGLASS. ALL CONDUIT INSIDE CONTROL HOUSE SHALL BE GALVANIZED RIGID STEEL (GRS).
4. CONDUITS FOR BRIDGE CONTROL SYSTEM SHOWN ONLY FOR ROUTING PURPOSES. FOR WIRING AND CONDUIT SIZES, SEE RACEWAY SCHEDULES AND WIRING TABLES.
5. WHERE CONDUITS/CABLES PASS THROUGH CONCRETE, SEAL ALL HOLES WITH APPROVED NON-SHRINK FIRE STOPPING MATERIAL.
6. CONTRACTOR SHALL FURNISH AND INSTALL CONDUIT FITTINGS WHERE NECESSARY TO ENSURE CONDUIT/RACEWAY INSTALLATION IS COMPLIANT WITH THE NEC.
7. ALL STAINLESS STEEL CABINETS SHALL BE EQUIPPED WITH 3-POINT LATCHES AND LOCKS.
8. LIGHTING, INTERCOM, HVAC, AND FIRE ALARM INSTALLATIONS SHOWN ON LIGHTING PLANS. CONTRACTOR SHALL COORDINATE ALL INSTALLATIONS IN THE FIELD.
9. ALL WIRING RUNNING THROUGH THE FIELD WIRING TERMINAL CABINET TO FIELD DEVICES SHALL BE PROTECTED BY SURGE SUPRESSORS AND TERMINATED IN THE CABINET ON TERMINAL BLOCKS. TERMINATIONS SHALL BE LABELED AND AS-BUILT TERMINATION DRAWINGS SHALL BE SUBMITTED AT COMPLETION OF PROJECT.
10. CONTRACTOR SHALL COORDINATE THE INSTALLATION OF THE GENERATOR THROUGH THE EXHAUST LOUVER AND VERIFY DIMENSION BASED ON APPROVED SHOP DRAWINGS.

PROJECT NO. B-2532

CRAVEN COUNTY

STATION: 31+21.29 -L-

NORTH CAROLINA PROFESSIONAL SEAL 031843 ENGINEER GREGORY S. BARON

STATE OF NORTH CAROLINA
DEPARTMENT OF TRANSPORTATION
RALEIGH, NC

CONTROL HOUSE ENTRY LEVEL EQUIPMENT PLAN

HNTB HNTB NORTH CAROLINA, P.C.
343 E. Six Forks Rd., Suite 200, Raleigh, N.C. 27609

DRAWN BY FG DATE 9/26/06
CHECKED BY CMC DATE 9/26/06
DWG. NO. E-26

REVISIONS						SHEET NO.
NO.	BY	DATE	NO.	BY	DATE	S-287
1			3			TOTAL SHEETS
2			4			348

plotted by: AT FILD103
on: 09/27/2006 14:15
in: N:\Working Files for 100% submittal\B2532_EL_E26 Cont house 2nd flr plan.dgn

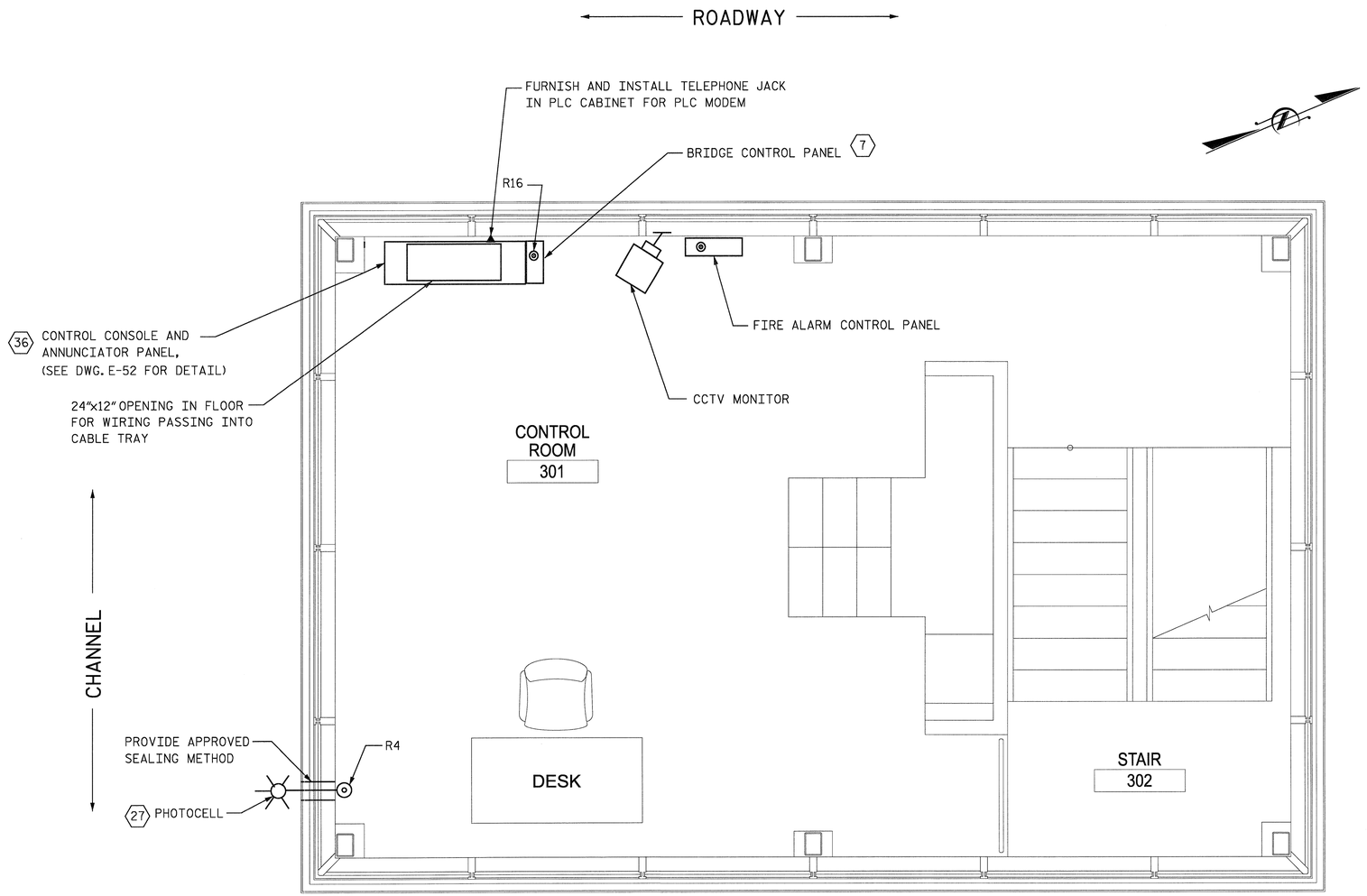

CONTROL ROOM - 3RD FLOOR

LEGEND:

——	CONDUIT PATH (FOR CONDUIT SIZE, SEE RACEWAY SCHEDULE, SHEET E108-109)
•	CONDUIT TURNS DOWN FROM HORIZONTAL ROUTE
◦	CONDUIT TURNS UP FROM HORIZONTAL ROUTE
◎ OR ◉	CONDUIT PASSES THROUGH FLOOR
⊙	CONDUIT PASSES THROUGH CEILING
⊠ OR ⊠	WIREWAY PASSES THROUGH CEILING OR FLOOR
▼	TELEPHONE JACK

NOTES:

1. MAXIMUM SPACING OF CONDUIT/CABLE SUPPORTS SHALL BE 5 FEET ON CENTER.
2. ATTACH UNISTRUT SUPPORT TO CONCRETE WITH S.S. EXPANSION ANCHORS, SIZED PER MANUFACTURER'S RECOMMENDATIONS.
3. ALL CONDUITS IN UNHEATED SPACES SHALL BE FIBERGLASS. CONDUIT EMBEDDED IN CONCRETE SHALL BE FIBERGLASS. ALL CONDUIT INSIDE CONTROL HOUSE SHALL BE GALVANIZED RIGID STEEL (GRS).
4. CONDUITS FOR BRIDGE CONTROL SYSTEM SHOWN ONLY FOR ROUTING PURPOSES. FOR WIRING AND CONDUIT SIZES, SEE RACEWAY SCHEDULES AND WIRING TABLES.
5. WHERE CONDUITS/CABLES PASS THROUGH CONCRETE, SEAL ALL HOLES WITH APPROVED NON-SHRINK FIRE STOPPING MATERIAL.
6. CONTRACTOR SHALL FURNISH AND INSTALL CONDUIT FITTINGS WHERE NECESSARY TO ENSURE CONDUIT/RACEWAY INSTALLATION IS COMPLIANT WITH THE NEC.
7. ALL STAINLESS STEEL CABINETS SHALL BE EQUIPPED WITH 3-POINT LATCHES AND LOCKS.
8. LIGHTING, INTERCOM, HVAC, AND FIRE ALARM INSTALLATIONS SHOWN ON LIGHTING PLANS. CONTRACTOR SHALL COORDINATE ALL INSTALLATIONS IN THE FIELD.
9. ALL TELEPHONE WIRING SHALL BE INSTALLED IN RACEWAYS DEDICATED TO THE TELEPHONE SYSTEM, AND CONNECTED TO THE TELEPHONE INTERFACE ON THE FIRST FLOOR

PROJECT NO. B-2532

CRAVEN COUNTY

STATION: 31+21.29 -L-

NORTH CAROLINA PROFESSIONAL SEAL 031843 ENGINEER GREGORY S. BARON

STATE OF NORTH CAROLINA
DEPARTMENT OF TRANSPORTATION
RALEIGH, NC

CONTROL HOUSE
CONTROL ROOM
EQUIPMENT PLAN

HNTB HNTB NORTH CAROLINA, P.C.
343 E. Six Forks Rd., Suite 200, Raleigh, N.C. 27609

DRAWN BY FG DATE 9/26/06
CHECKED BY CMC DATE 9/26/06
DWG. NO. E-27

REVISIONS						SHEET NO.
NO.	BY	DATE	NO.	BY	DATE	S-288
1			3			TOTAL SHEETS
2			4			348

fgbirchler 4F FILD103
09/27/2006 14:16
U:\FF4957\e\Working Files for 100% submittal\B2532_EL_E27 Cont house 3rd flr plan.dgn

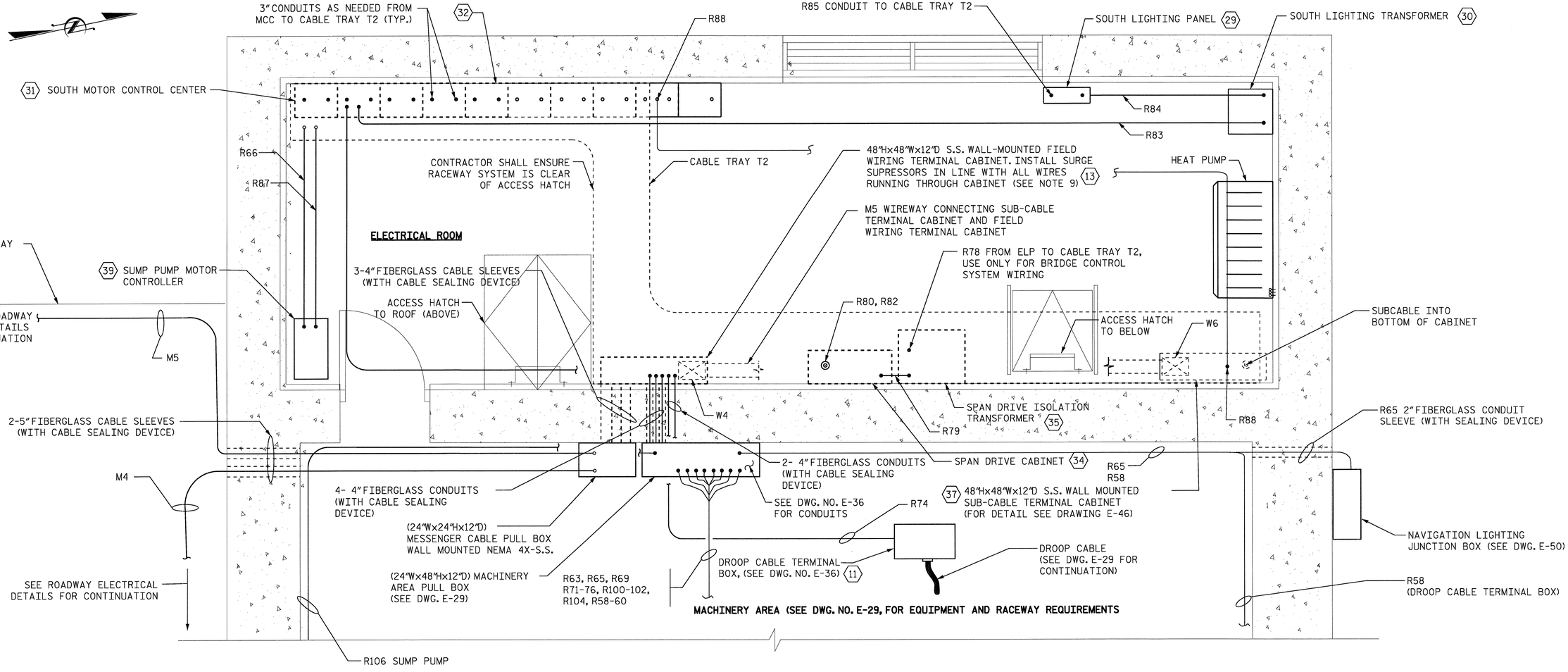

SOUTH ELECTRICAL ROOM - PLAN

NOTES:

1. MAXIMUM SPACING OF CONDUIT/CABLE SUPPORTS SHALL BE 5 FEET ON CENTER.
2. ATTACH UNISTRUT SUPPORT TO CONCRETE WITH S.S. EXPANSION ANCHORS, SIZED PER MANUFACTURER'S RECOMMENDATIONS.
3. ALL CONDUIT IN UNHEATED SPACESSHALL BE FIBERGLASS. CONDUIT EMBEDDED IN CONCRETE SHALL BE FIBERGLASS. ALL CONDUIT INSIDE CONTROL HOUSE SHALL BE GALVANIZED RIGID STEEL (GRS).
4. CONDUITS FOR BRIDGE CONTROL SYSTEM SHOWN ONLY FOR ROUTING PURPOSES. FOR WIRING AND CONDUIT SIZES, SEE RACEWAY SCHEDULES AND WIRING TABLES.
5. WHERE CONDUITS/CABLES PASS THROUGH CONCRETE, SEAL ALL HOLES WITH APPROVED NON-SHRINK FIRE STOPPING MATERIAL.
6. CONTRACTOR SHALL FURNISH AND INSTALL CONDUIT FITTINGS WHERE NECESSARY TO ENSURE CONDUIT/RACEWAY INSTALLATION IS COMPLIANT WITH THE NEC.
7. ALL STAINLESS STEEL CABINETS SHALL BE EQUIPPED WITH 3-POINT LATCHES AND LOCKS.
8. LIGHTING, INTERCOM, HVAC, AND FIRE ALARM INSTALLATIONS ARE NOT SHOWN FOR CLARITY. CONTRACTOR SHALL COORDINATE ALL INSTALLATIONS IN THE FIELD. LOCATIONS ARE SHOWN ON OTHER DRAWINGS.
9. ALL TELEPHONE WIRING SHALL BE INSTALLED IN RACEWAYS DEDICATED TO THE TELEPHONE SYSTEM, AND CONNECTED TO THE TELEPHONE INTERFACE ON THE FIRST FLOOR

LEGEND:

——	CONDUIT PATH (FOR CONDUIT SIZE, SEE RACEWAY SCHEDULE
•	CONDUIT TURNS DOWN FROM HORIZONTAL ROUTE
◦	CONDUIT TURNS UP FROM HORIZONTAL ROUTE
◎ OR ◉	CONDUIT PASSES THROUGH FLOOR
⦶	CONDUIT PASSES THROUGH CEILING
⊠ OR ⊠	WIREWAY PASSES THROUGH CEILING OR FLOOR
▼	TELEPHONE JACK

NORTH CAROLINA PROFESSIONAL SEAL 031843 ENGINEER GREGORY S. BARON

PROJECT NO. B-2532
CRAVEN COUNTY
STATION: 31+21.29 -L-

STATE OF NORTH CAROLINA
DEPARTMENT OF TRANSPORTATION
RALEIGH, NC

SOUTH ELECTRICAL ROOM EQUIPMENT PLAN

HNTB HNTB NORTH CAROLINA, P.C.
343 E. Six Forks Rd., Suite 200, Raleigh, N.C. 27609

DRAWN BY SK DATE 9/26/06
CHECKED BY MS DATE 9/26/06
DWG. NO. E-28

REVISIONS						SHEET NO.
NO.	BY	DATE	NO.	BY	DATE	S-239
1			3			TOTAL SHEETS 348
2			4			

final plans 47 FFLD103
DESIGN 06 44 17
UNFF-0257(3) Working Files for 100% submittal\B2532_EL_E28_S Elec Rm equip plan.dgn

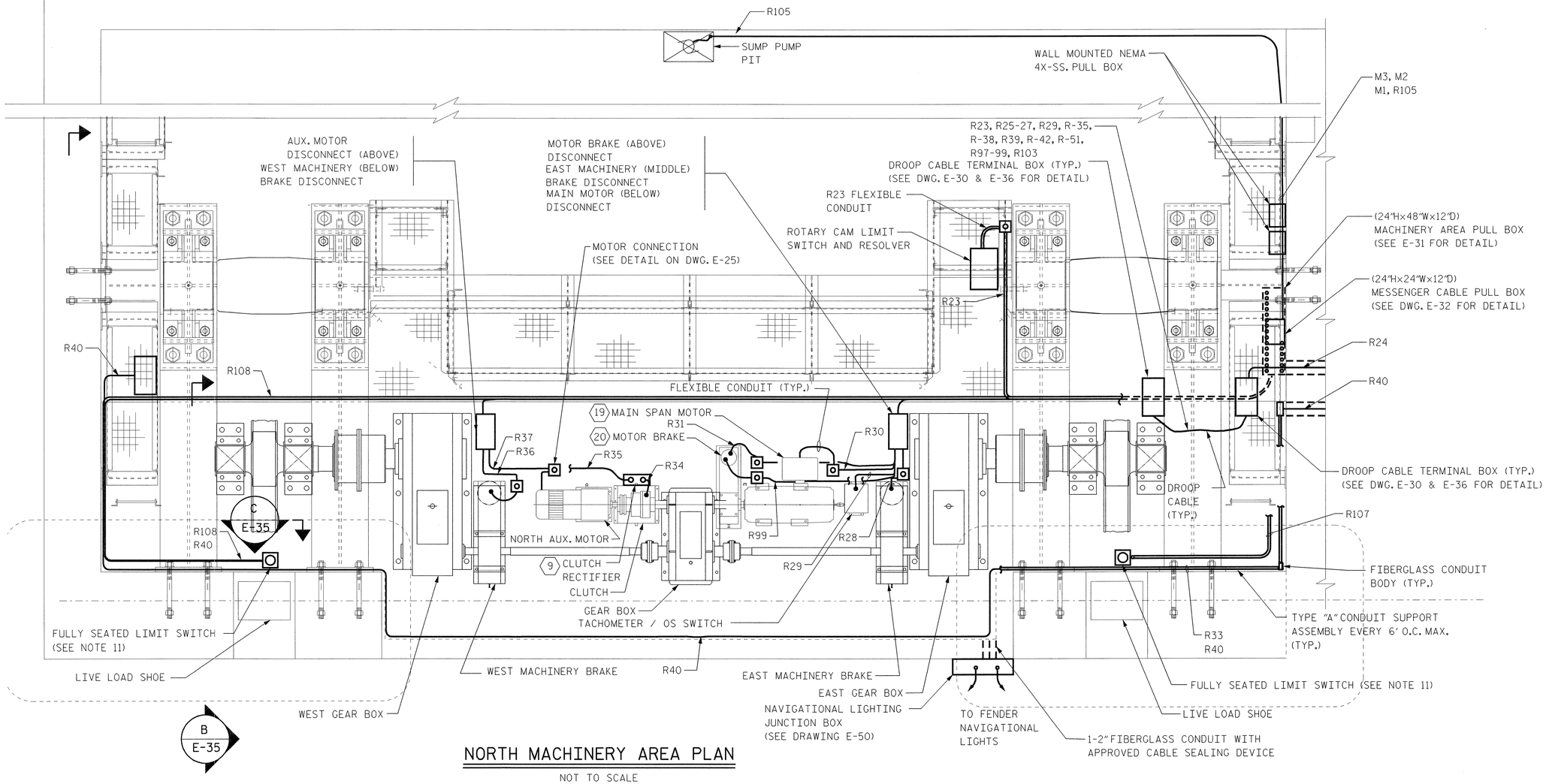

NORTH MACHINERY AREA PLAN

NOT TO SCALE

LEGEND:

- CONDUIT PATH (FOR CONDUIT SIZE, SEE RACEWAY SCHEDULE
- CONDUIT TURNS DOWN FROM HORIZONTAL ROUTE
- CONDUIT TURNS UP FROM HORIZONTAL ROUTE
- OR — CONDUIT PASSES THROUGH FLOOR
- CONDUIT PASSES THROUGH CEILING
- OR — WIREWAY PASSES THROUGH CEILING OR FLOOR
- TELEPHONE JACK
- FLEXIBLE CONDUIT
- DISCONNECT
- PULL BOX
- LIMIT SWITCH

NOTES:

1. NORTH MACHINERY AREA SHOWN, SOUTH MARCHINERY AREA OPPOSITE HAND. CONTRACTOR SHALL INSTALL CONDUIT AND EQUIPMENT IN BOTH MACHINERY AREAS.
2. MAXIMUM SPACING OF CONDUIT SUPPORTS SHALL BE 5 FEET ON CENTER.
3. ATTACH UNISTRUT SUPPORT TO CONCRETE WITH S.S. EXPANSION ANCHORS, SIZED PER MANUFACTURER'S RECOMMENDATIONS.
4. ALL CONDUIT IN NORTH MACHINERY AREA SHALL BE FIBERGLASS.
5. CONDUITS FOR BRIDGE CONTROL SYSTEM SHOWN ONLY FOR ROUTING PURPOSES. FOR WIRING AND CONDUIT SIZES, SEE RACEWAY SCHEDULES AND WIRING TABLES.
6. WHERE CONDUITS PASS THROUGH CONCRETE, SEAL ALL HOLES WITH APPROVED NON-SHRINK FIRE STOPPING MATERIAL.
7. CONTRACTOR SHALL FURNISH AND INSTALL CONDUIT FITTINGS WHERE NECESSARY TO ENSURE CONDUIT/RACEWAY INSTALLATION IS COMPLIANT WITH THE NEC.
8. ALL STAINLESS STEEL CABINETS SHALL BE EQUIPPPED WITH 3-POINT LATCHES AND LOCKS.
9. LIGHTING, INTERCOM, HVAC, AND FIRE ALARM INSTALLATIONS ARE SHOWN FOR CLARITY. CONTRACTOR SHALL COORDINATE ALL INSTALLATIONS IN THE FIELD. LOCATIONS ARE SHOWN ON OTHER DRAWINGS.
10. ALL WIRING RUNNING THROUGH THE FIELD WIRING TERMINAL CABINET TO FIELD DEVICES SHALL BE PROTECTED BY SURGE SUPRESSORS AND TERMINATED IN THE CABINET ON TERMINAL BLOCKS. TERMINATIONS SHALL BE LABELED AND AS-BUILT TERMINATION DRAWINGS SHALL BE SUBMITTED AT COMPLETION OF PROJECT.

NORTH CAROLINA PROFESSIONAL SEAL 031843 ENGINEER GREGORY S. BARON

PROJECT NO. B-2532
CRAVEN COUNTY
STATION: 31+21.29 -L-

STATE OF NORTH CAROLINA
DEPARTMENT OF TRANSPORTATION
RALEIGH, NC

NORTH MACHINERY AREA EQUIPMENT PLAN

HNTB HNTB NORTH CAROLINA, P.C.
343 E. Six Forks Rd., Suite 200, Raleigh, N.C. 27609

DRAWN BY FG DATE 10/20/06
CHECKED BY CMC DATE 10/20/06
DWG. NO. E-29

REVISIONS						SHEET NO.
NO.	BY	DATE	NO.	BY	DATE	S-290
1			3			TOTAL SHEETS
2			4			348

jsherman AT FFLD126
19-OCT-2006 14:00
\\NT4SRV3\e1\Working Files for 100% submittal\B2532_EL-E29 N Mach equip plan.dgn

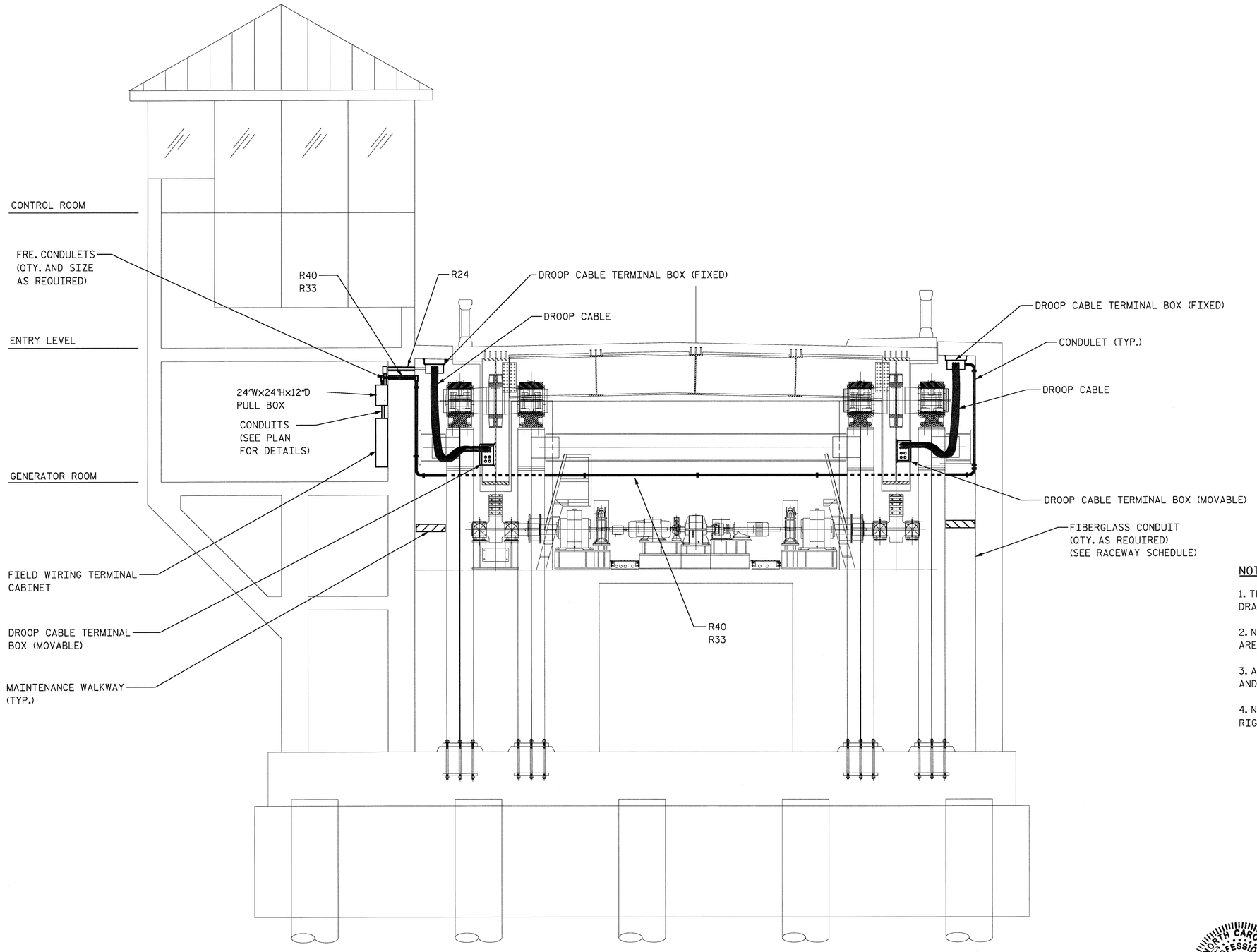

MACHINERY AREA ELEVATION
DROOP CABLE INSTALLATIONS

(LOOKING SOUTH)

A
E-29

NOTES:

1. THE CONTRACTOR SHALL REFERENCE MECHANICAL AND STRUCTURAL DRAWINGS FOR ACTUAL DIMENSIONS AND EQUIPMENT LOCATIONS.

2. NOT ALL CONDUITS ARE SHOWN ON ELEVATIONS. SEE ALL MACHINERY AREA EQUIPMENT ELEVATIONS AND PLANS FOR ADDITIONAL CONDUIT.

3. ALL RACEWAYS SHALL BE SUPPORTED WITH S.S. SUPPORTS TYPE A AND TYPE B.

4. NORTH PIER ELEVATION SHOWN, SOUTH PIER ELEVATION IS OPPOSITE RIGHT HAND.

PROJECT NO. B-2532

CRAVEN COUNTY

STATION: 31+21.29 -L-

NORTH CAROLINA PROFESSIONAL SEAL 031843 ENGINEER GREGORY S. BARON

STATE OF NORTH CAROLINA
DEPARTMENT OF TRANSPORTATION
RALEIGH, NC

MACHINERY AREA EQUIPMENT ELEVATIONS AND DETAILS 1

HNTB HNTB NORTH CAROLINA, P.C.
343 E. Six Forks Rd., Suite 200, Raleigh, N.C. 27609

DRAWN BY FG DATE 9/26/06
CHECKED BY CMC DATE 9/26/06
DWG. NO. E-30

REVISIONS						SHEET NO.
NO.	BY	DATE	NO.	BY	DATE	S-291
1			3			TOTAL SHEETS
2			4			348

plotted by: KT FILD103
on: 10/27/2006 14:19
in: \\VFP48\Data\Working Files for 100% submittal\B2532_FIL_E30 Mach area east & detail.dgn

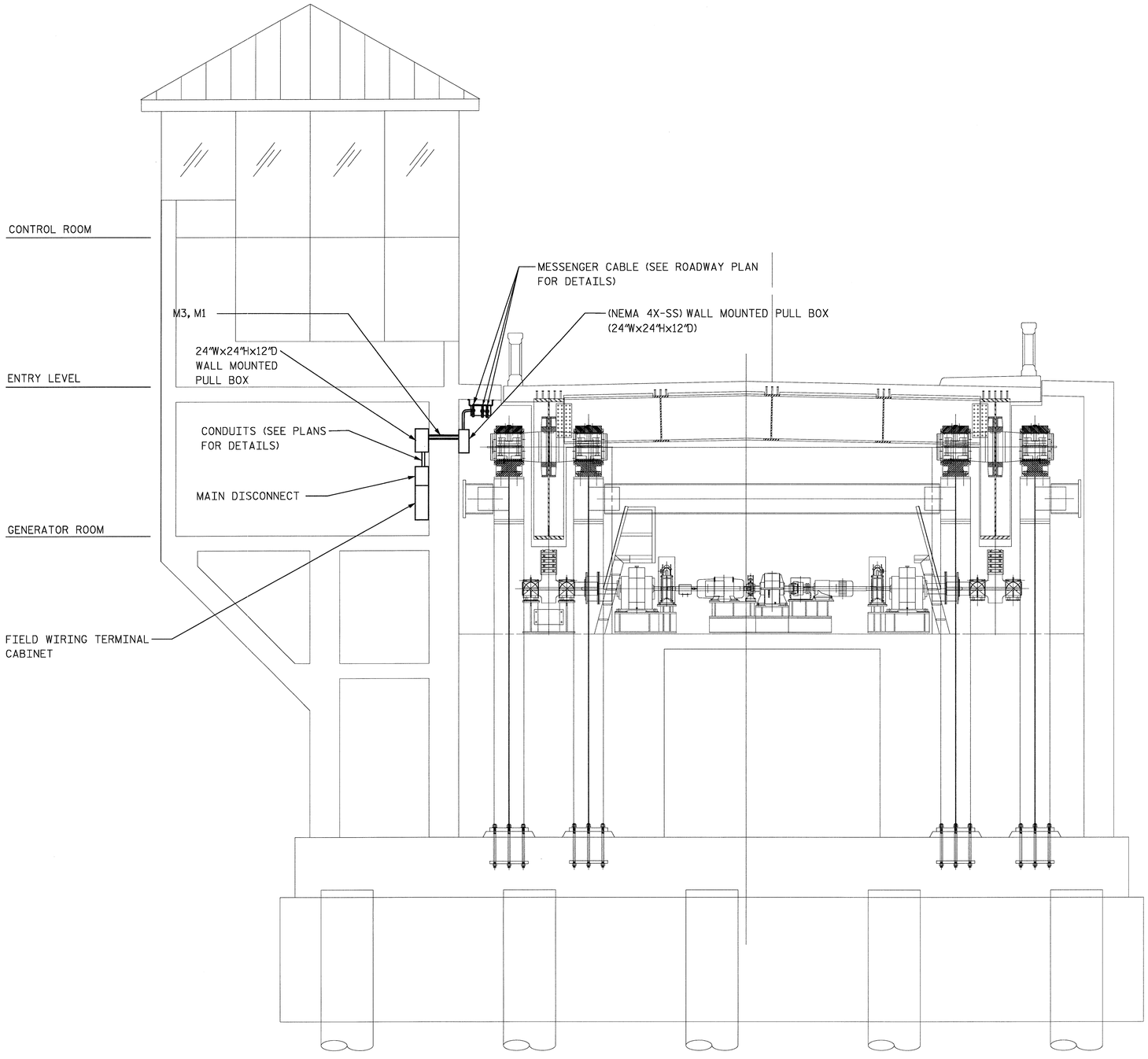

MACHINERY AREA ELEVATION
MESSENGER CABLE DETAILS

(LOOKING SOUTH - SEE DRAWING E-29)

A
E-29

NOTES:

1. THE CONTRACTOR SHALL REFERENCE MECHANICAL AND STRUCTURAL DRAWINGS FOR ACTUAL DIMENSIONS AND EQUIPMENT LOCATIONS.

2. NOT ALL CONDUITS ARE SHOWN ON ELEVATIONS. SEE ALL MACHINERY AREA EQUIPMENT ELEVATIONS AND PLANS FOR ADDITIONAL CONDUIT.

3. ALL RACEWAYS SHALL BE SUPPORTED WITH S.S. SUPPORTS TYPE A AND TYPE B.

4. NORTH PIER ELEVATION SHOWN, SOUTH PIER ELEVATION IS OPPOSITE RIGHT HAND.

PROJECT NO. B-2532

CRAVEN COUNTY

STATION: 31+21.29 -L-

NORTH CAROLINA PROFESSIONAL SEAL 031843 ENGINEER GREGORY S. BARON

STATE OF NORTH CAROLINA
DEPARTMENT OF TRANSPORTATION
RALEIGH, NC

MACHINERY AREA EQUIPMENT ELEVATIONS AND DETAILS 2

HNTB HNTB NORTH CAROLINA, P.C.
343 E. Six Forks Rd., Suite 200, Raleigh, N.C. 27609

DRAWN BY FG DATE 9/26/06
CHECKED BY CMC DATE 9/26/06
DWG. NO. E-31

REVISIONS						SHEET NO.
NO.	BY	DATE	NO.	BY	DATE	S-292
1			3			TOTAL SHEETS
2			4			348

fgohlinger AT FILD103
05/25/2006 14:23
U:\FHB573\w1\Working Files for 100% submittal\B2532_EL_E31 Mach area EQUIPsect & detailsgn

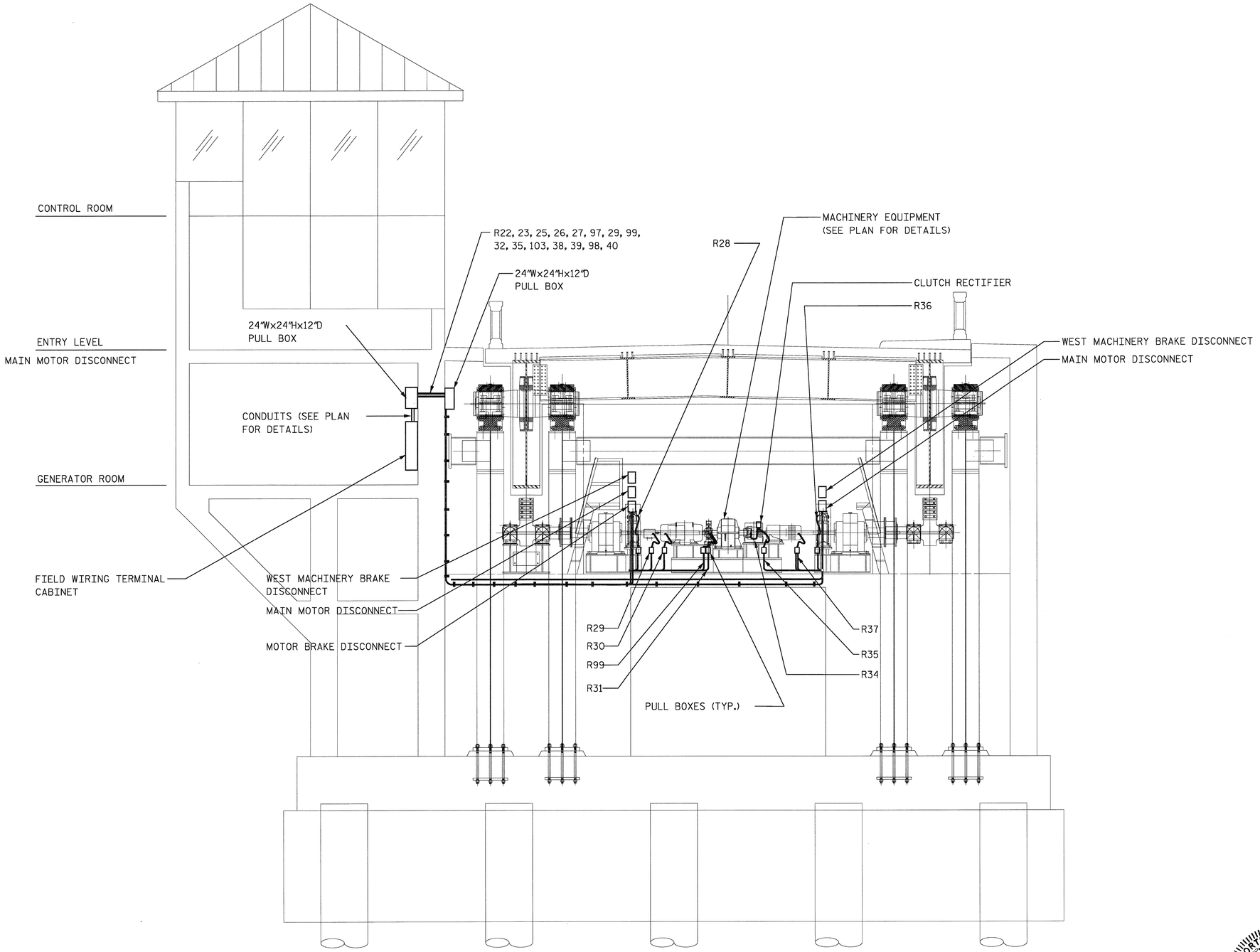

MACHINERY AREA ELEVATION
MACHINERY EQUIPMENT INSTALLATIONS

(LOOKING SOUTH)

A
E-29

NOTES:

1. THE CONTRACTOR SHALL REFERENCE MECHANICAL AND STRUCTURAL DRAWINGS FOR ACTUAL DIMENSIONS AND EQUIPMENT LOCATIONS.

2. NOT ALL CONDUITS ARE SHOWN ON ELEVATIONS. SEE ALL MACHINERY AREA EQUIPMENT ELEVATIONS AND PLANS FOR ADDITIONAL CONDUIT.

3. ALL RACEWAYS SHALL BE SUPPORTED WITH S.S. SUPPORTS TYPE A AND TYPE B.

4. NORTH PIER ELEVATION SHOWN, SOUTH PIER ELEVATION IS OPPOSITE RIGHT HAND.

PROJECT NO. B-2532

CRAVEN COUNTY

STATION: 31+21.29 -L-

NORTH CAROLINA PROFESSIONAL SEAL 031843 ENGINEER GREGORY S. BARON

STATE OF NORTH CAROLINA
DEPARTMENT OF TRANSPORTATION
RALEIGH, NC

MACHINERY AREA EQUIPMENT ELEVATIONS AND DETAILS 3

HNTB HNTB NORTH CAROLINA, P.C.
343 E. Six Forks Rd., Suite 200, Raleigh, N.C. 27609

DRAWN BY FG DATE 9/26/06
CHECKED BY CMC DATE 9/26/06
DWG. NO. E-32

REVISIONS						SHEET NO.
NO.	BY	DATE	NO.	BY	DATE	S-213
1			3			TOTAL SHEETS
2			4			348

forbridge XF_FELD103
08/17/2006 14:44
U:\FF4857\e1\Working Files for 100% submittal\B2532_FL_E32 Mach area seat & detail 3.dgn

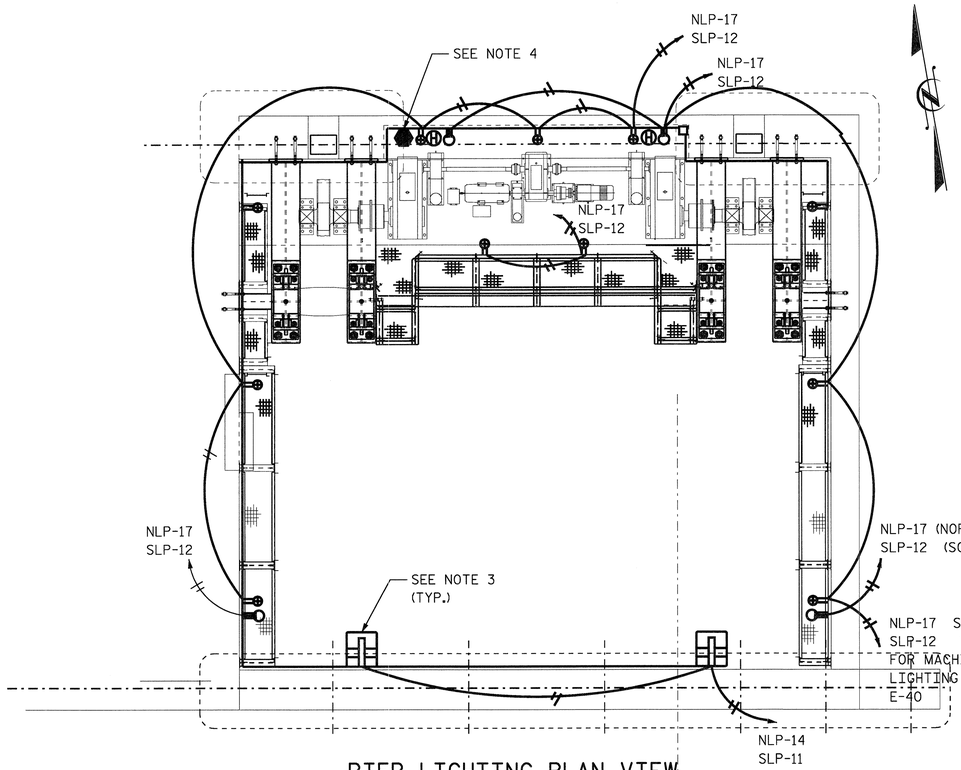

PIER LIGHTING PLAN VIEW

NOT TO SCALE

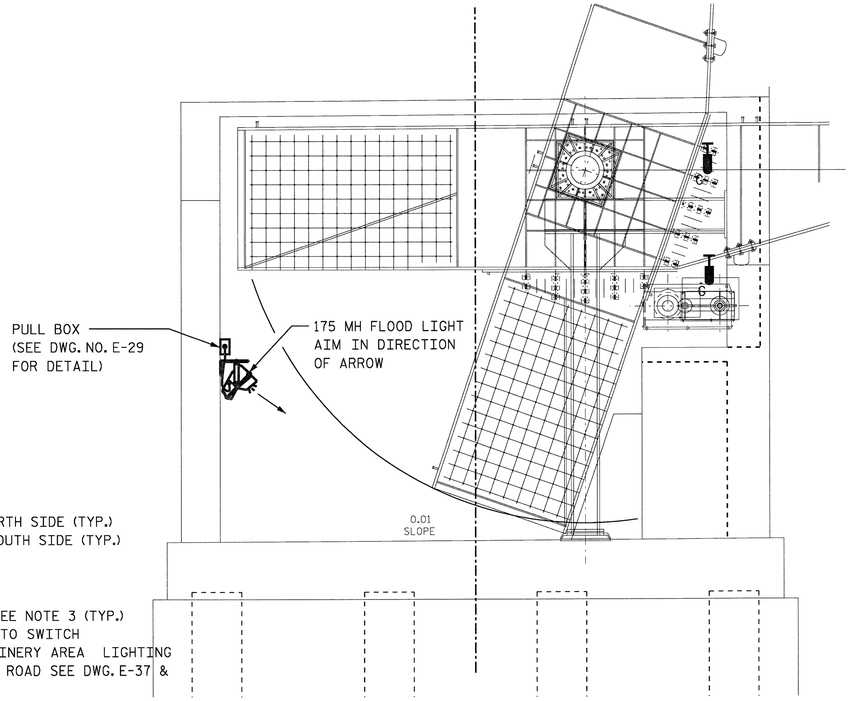

PIER LIGHTING SECTION - (LOOKING WEST)

NOT TO SCALE

LEGEND:

- TYPE G — 150W - WALL MOUNTED INCANDESCENT FIXTURES
- INTERCOM
- TYPE F — FLOOD LIGHT, 175W MH WALL MOUNTED
- HEAT SENSOR
- GFCI RECEPTACLES

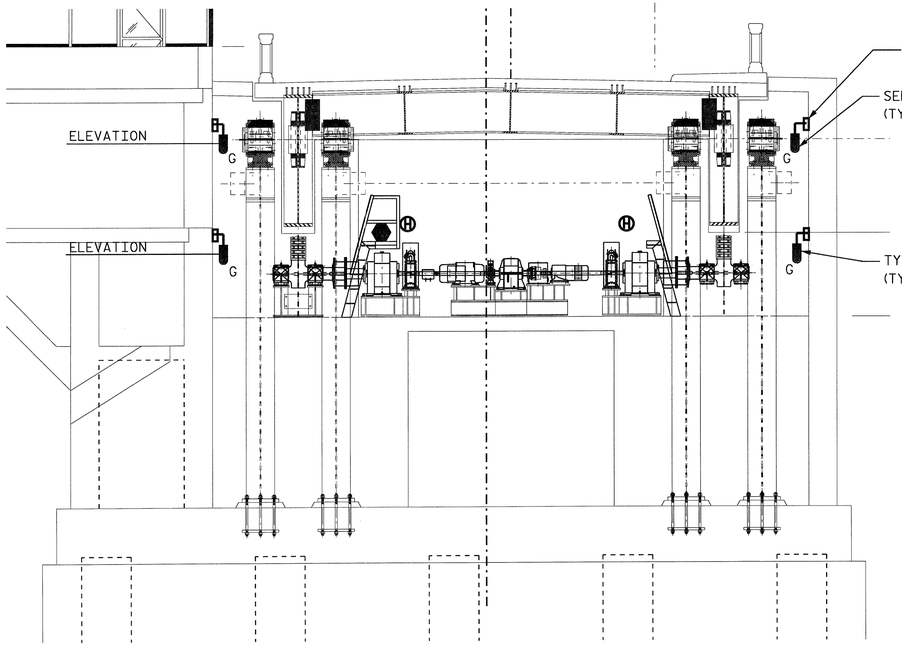

PIER LIGHTING NORTH ELEVATION - SECTION

NOT TO SCALE

NOTES:

1. SOUTH MACHINERY AREA SHOWN, NORTH MACHINERY AREA OPPOSITE HAND. CONTRACTOR SHALL INSTALL CONDUIT AND EQUIPMENT IN BOTH MACHINERY ARES AS SHOWN.
2. MAXIMUM SPACING OF CONDUIT SUPPORTS SHALL BE 5 FEET ON CENTER.
3. POWER TO THE LIGHT FIXTURE SHALL BE SUPPLIED VIA 1"FRE., FIELD LOCATED BY THE CONTRACTOR.
4. WIRING TO INTERCOM AND HEAT SENSOR SHALL BE ROUTED VIA DEDICATED CONDUIT, FIELD LOCATED BY CONTRACTOR & APPROVED BY ENGINEER.
5. ALL EXPOSED CONDUIT SHALL BE PVC COATED GALVANIZED RIGID STEEL (PVGRS). CONDUIT EMBEDDED IN CONCRETE SHALL BE GALVANIZED RIGID STEEL (GRS).
6. CONDUITS FOR BRIDGE CONTROL SYSTEM SHOWN ONLY FOR ROUTING PURPOSES. FOR WIRING AND CONDUIT SIZES, SEE RACEWAY SCHEDULES AND WIRING TABLES.
7. WHERE CONDUITS PASS THROUGH CONCRETE, SEAL ALL HOLES WITH APPROVED NON-SHRINK FIRE STOPPING MATERIAL.
8. LOCATION OF FIXTURES MAY BE ADJUSTED IN THE FIELD, TO ACCOMMODATE CONDUIT & WATER/SEWER LINE INSTALLATION AND SPAN OPENING CLEARANCE.
9. CONTRACTOR SHALL FURNISH AND INSTALL CONDUIT FITTINGS WHERE NECESSARY TO ENSURE CONDUIT/RACEWAY INSTALLATION IS COMPLIANT WITH THE NEC.
10. ALL NECESSARY HARDWARE TO INSTALL THE FIXTURE SHALL BE PROVIDE BY THE MANUFACTURER.
11. SEE LIGHTING PLANS FOR LIGHT SWITCH LOCATIONS.

NORTH CAROLINA PROFESSIONAL SEAL 031843 ENGINEER GREGORY S. BARON 9/26/06

PROJECT NO. B-2532

CRAVEN COUNTY

STATION: 31+21.29 -L-

STATE OF NORTH CAROLINA
DEPARTMENT OF TRANSPORTATION
RALEIGH, NC

BASCULE PIER DETAILS

HNTB HNTB NORTH CAROLINA, P.C.
343 E. Six Forks Rd., Suite 200, Raleigh, N.C. 27609

DRAWN BY SL DATE 9/26/06
CHECKED BY MS DATE 9/26/06
DWG. NO. E-33

REVISIONS						SHEET NO.
NO.	BY	DATE	NO.	BY	DATE	S-274
1			3			TOTAL SHEETS
2			4			348

Default plotdate: 09/26/2006 08:45
User: MT_FIELD103
DGN: (U:\FF-6573a\Working Files for 100% submittal\B2532_FI_E33 Base Pier 13 Elev.dgn

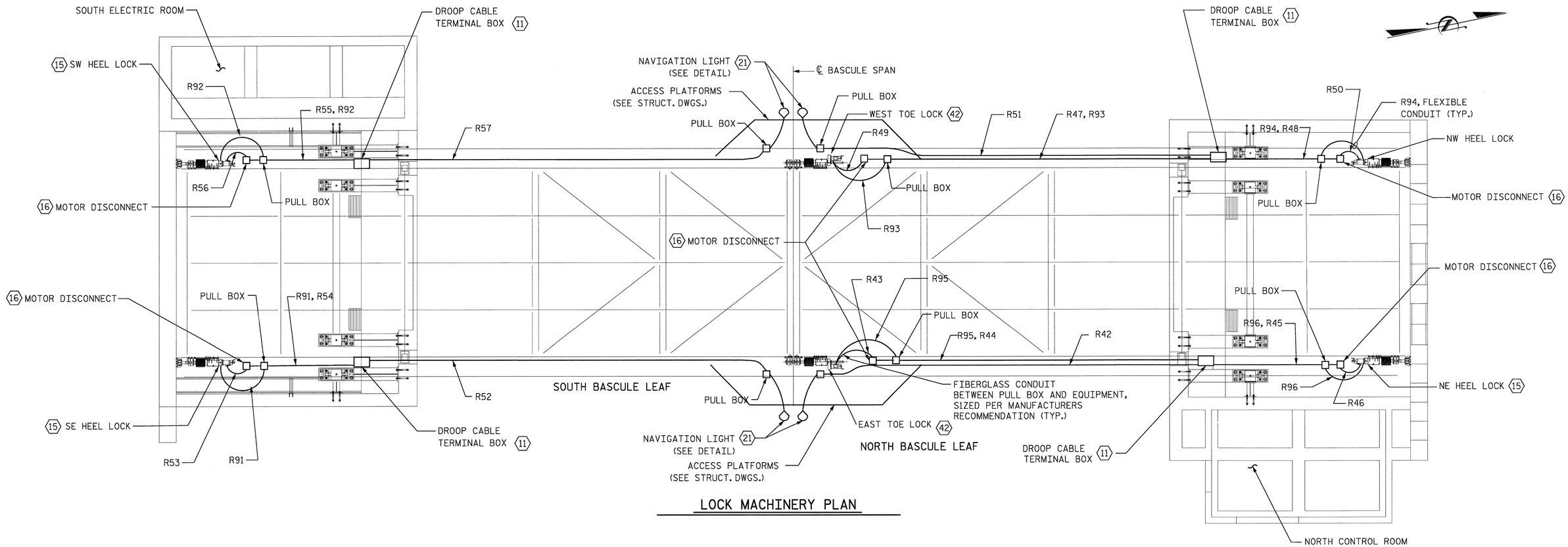

LOCK MACHINERY PLAN

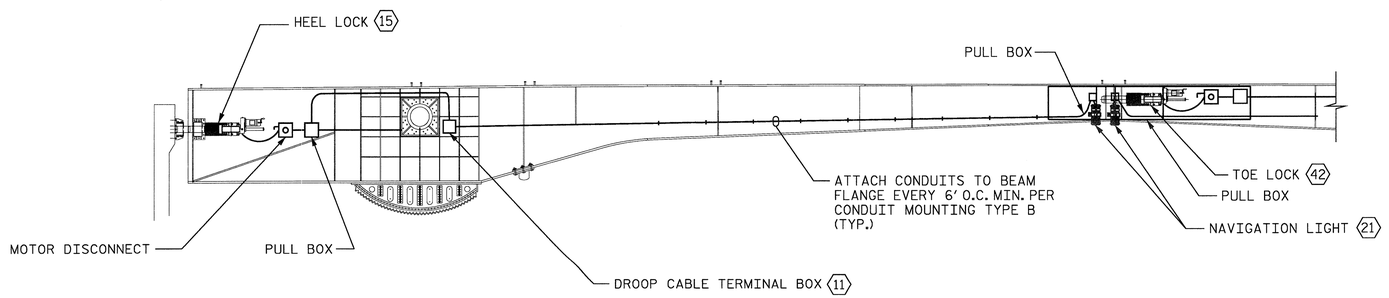

LOCK MACHINERY ELEVATION

NOTES:

1. RECEPTACLES AND LIGHT FIXTURES ARE NOT SHOWN FOR CLARITY. SEE DRAWING E-36 FOR DETAIL.
2. THE CONTRACTOR SHALL REFERENCE MECHANICAL AND STRUCTURAL DRAWINGS FOR ACTUAL DIMENSIONS AND EQUIPMENT LOCATIONS.
3. ALL RACEWAYS SHALL BE SUPPORTED WITH S.S. SUPPORTS TYPE A AND TYPE B.

PROJECT NO. B-2532

CRAVEN COUNTY

STATION: 31+21.29 -L-

NORTH CAROLINA PROFESSIONAL SEAL 031843 ENGINEER GREGORY S. BARON

STATE OF NORTH CAROLINA
DEPARTMENT OF TRANSPORTATION
RALEIGH, NC

BASCULE SPAN EQUIPMENT PLAN AND ELEVATION

HNTB NORTH CAROLINA, P.C.
343 E. Six Forks Rd., Suite 200, Raleigh, N.C. 27609

DRAWN BY FG DATE 9/26/06
CHECKED BY MAW DATE 9/26/06
DWG. NO. E-34

REVISIONS						SHEET NO.
NO.	BY	DATE	NO.	BY	DATE	S-295
1			3			TOTAL SHEETS
2			4			348

fgotrlaeiya AT FFLD103
03-OCT-2006 14:26
U:\FF42673\e\Working Files for 100% submittal\B2532_EL_E34 Base span equip plan and elev.dgn

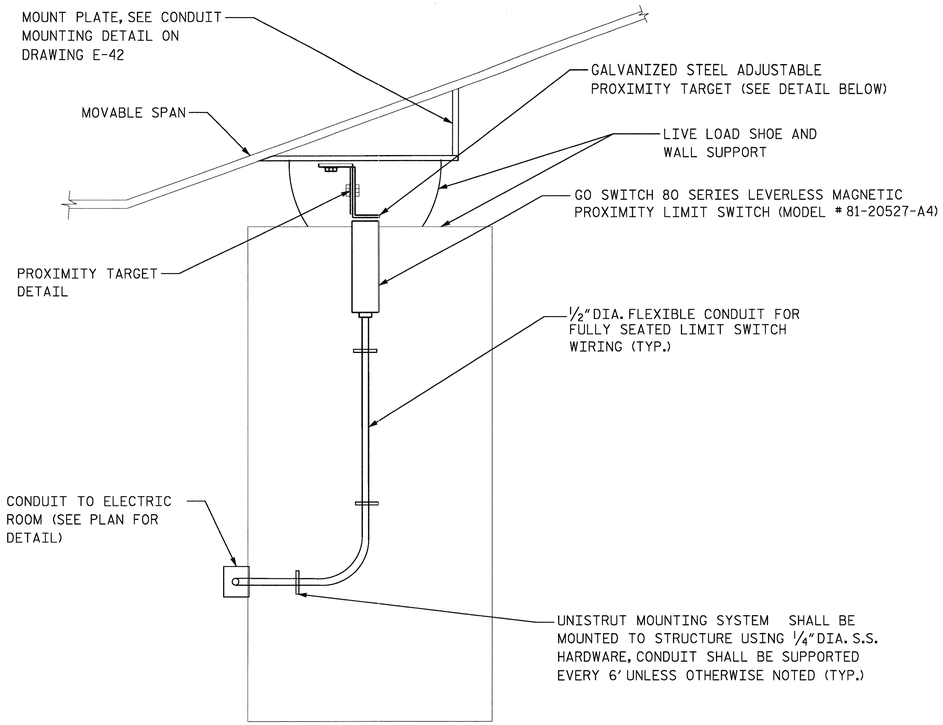

FULLY SEATED LIMIT SWITCH INSTALLATION DETAIL
SECTION C-C (SEE DRAWING E-29)

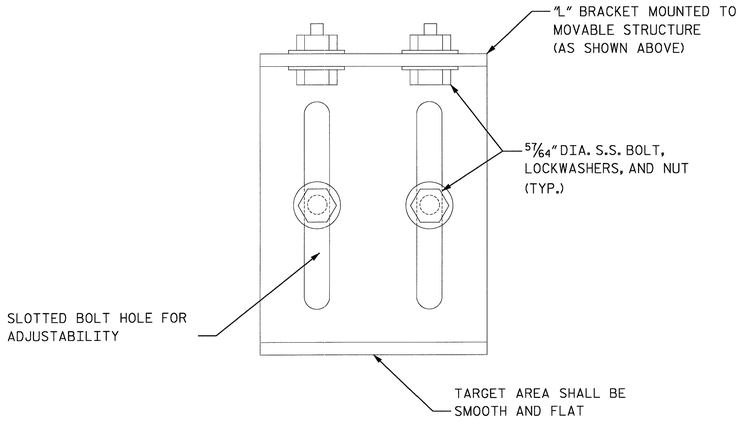

GALVANIZED STEEL PROXIMITY TARGET DETAIL

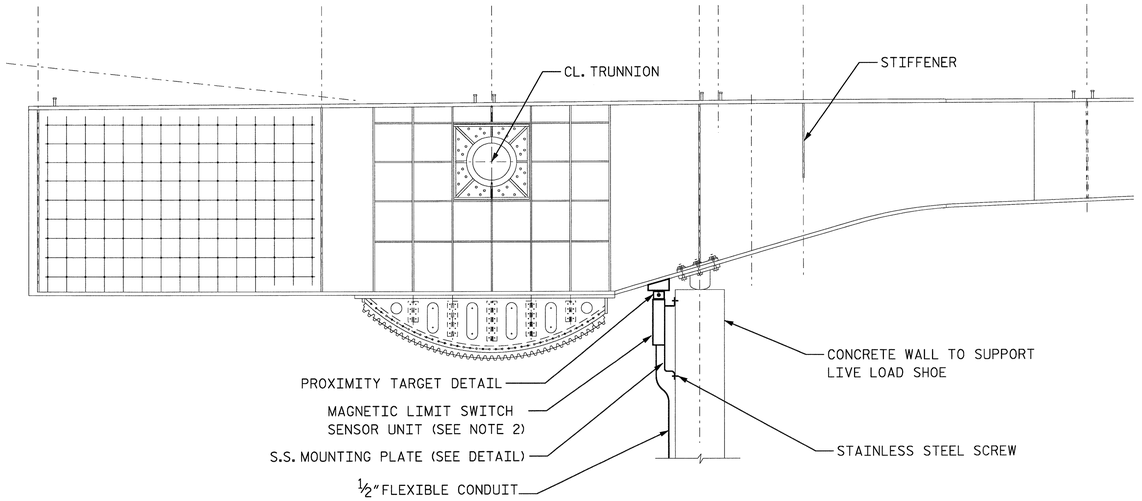

SECTION B-B (SEE DRAWING E-29)

NOTES:

1. FULLY SEATED LIMIT SWITCH SHALL BE INSTALLED IN FRONT OF LIVE LOAD SHOES. FOR LOCATION, SEE PLAN E-29.
2. NORTH BASCULE SPAN FULLY SEATED LIMIT SWITCHES SHALL BE MIRROR IMAGE OF SOUTH PIER BASCULE SPAN.
3. LIMIT SWITCH MOUNTING PLATE FACE SHALL BE PERPENDICULAR TO THE FACE OF THE MOVABLE BASCULE SPAN. THE HOLES ON THE PLATE SHALL BE 2"LONG SLOTTED FOR LIMIT SWITCH ADJUSTMENT.
4. TWO FULLY SEATED MAGNETIC PROXIMITY LIMIT SWITCHES SHALL BE FURNISHED AND INSTALLED AT EACH OF THE TWO MAIN BASCULE GIRDERS AS SHOWN. THE CONTRACTOR SHALL PROVIDE AMPLE LENGTH OF FLEXIBLE CONDUITS AT THE SWITCHES TO ALLOW FIELD ADJUSTMENT. THE CONTRACTOR SHALL FIELD ADJUST BOTH SWITCHES SO THAT APPROXIMATELY 5 MILLIMETERS OF SPACE IS AVAILABLE BETWEEN THE SWITCH FACE AND THE BASCULE GIRDER WHEN THE GIRDER IS FULLY SEATED ON THE LIVE LOAD SHOE. THE SWITCHES SHALL BE INSTALLED SO THAT THE GIRDERS WILL NEVER MAKE CONTACT WITH THE SWITCHES BUT WILL BE CLOSE ENOUGH IN THE SEATED POSITION TO POSITIVELY ACTUATE THESE PROXIMITY TYPE SWITCHES.

PROJECT NO. B-2532
CRAVEN COUNTY
STATION: 31+21.29 -L-

NORTH CAROLINA PROFESSIONAL SEAL 031843 ENGINEER GREGORY S. BARON 9/26/06

STATE OF NORTH CAROLINA
DEPARTMENT OF TRANSPORTATION
RALEIGH, NC

LIMIT SWITCH DETAILS

HNTB HNTB NORTH CAROLINA, P.C.
343 E. Six Forks Rd., Suite 200, Raleigh, N.C. 27609

DRAWN BY WL DATE 9/26/06
CHECKED BY CMC DATE 9/26/06
DWG. NO. E-35

REVISIONS						SHEET NO.
NO.	BY	DATE	NO.	BY	DATE	S-276
1			3			TOTAL SHEETS
2			4			348

forbrigdon AT FFLD103
05/07/2008 14:57
U:\FF\48730\Working Files for 100% submittal\B2532_EL_E35 Limit Switch Det.dgn

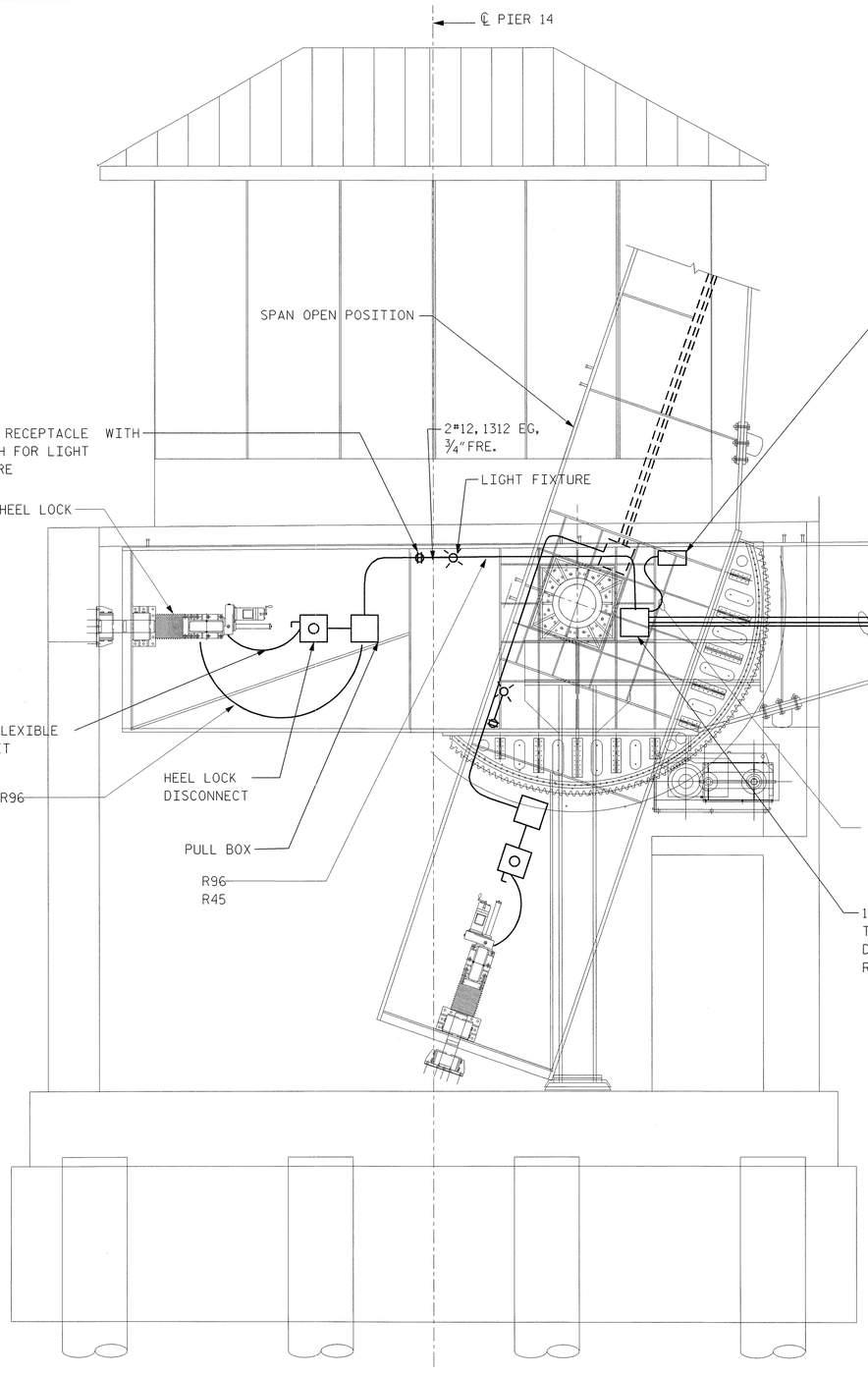

DROOP CABLE INSTALLATION PARTIAL ELEVATION

(LOOKING EAST)

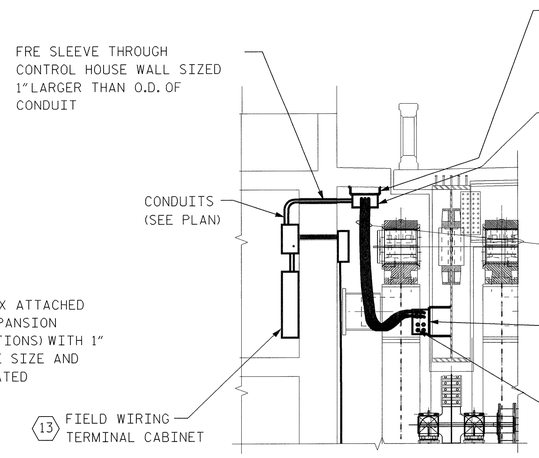

DROOP CABLE INSTALLATION DETAIL SECTION

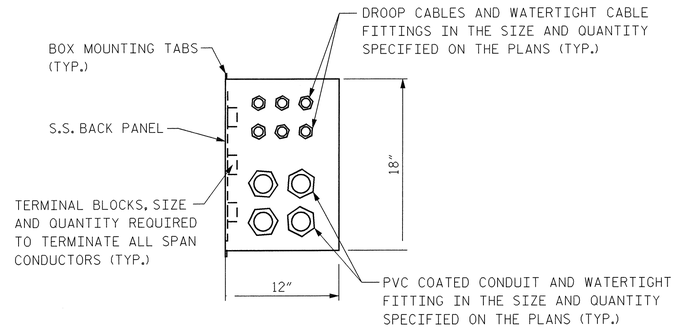

BASCULE SPAN DROOP CABLE TERMINAL BOX ELEVATION

NOTES:

1. DROOP CABLE AND SPAN CONDUIT SHOWN ARE FOR WEST SPAN. EAST SPAN INSTALLATION IS SIMILAR. CONDUIT AND CABLE QUANTITIES SHALL BE ADJUSTED AS REQUIRED.
2. COORDINATE INSTALLATION WITH OTHER CONDUIT, LIGHTING, AND EQUIPMENT MOUNTING IN PIER AREA, SEE SHEETS E33, E34, AND E42.
3. SEE STRUCTURAL AND MECHANICAL DRAWINGS FOR ADDITIONAL DETAILS.
4. UTILIZE SPARE DROOP CABLE CONDUCTORS SHOWN ON RACEWAY SCHEDULE TO POWER CONVENIENCE LIGHTING AND RECEPTACLES ON MOVABLE SPAN.

NORTH CAROLINA PROFESSIONAL SEAL 031843 ENGINEER GREGORY S. BARON

PROJECT NO. B-2532

CRAVEN COUNTY

STATION: 31+21.29 -L-

STATE OF NORTH CAROLINA
DEPARTMENT OF TRANSPORTATION
RALEIGH, NC

DROOP CABLE INSTALLATION DETAILS

HNTB NORTH CAROLINA, P.C.
343 E. Six Forks Rd., Suite 200, Raleigh, N.C. 27609

DRAWN BY SPL DATE 10/20/06
CHECKED BY SL DATE 10/20/06
DWG. NO. E-36

REVISIONS						SHEET NO.
NO.	BY	DATE	NO.	BY	DATE	S-297
1			3			TOTAL SHEETS
2			4			248

jbarton AT FFLD126
10/20/2006 4:40:40 PM
U:\Projects\Working Files for 100%_submittal\B2532_FL_E36 droop cable det.dgn

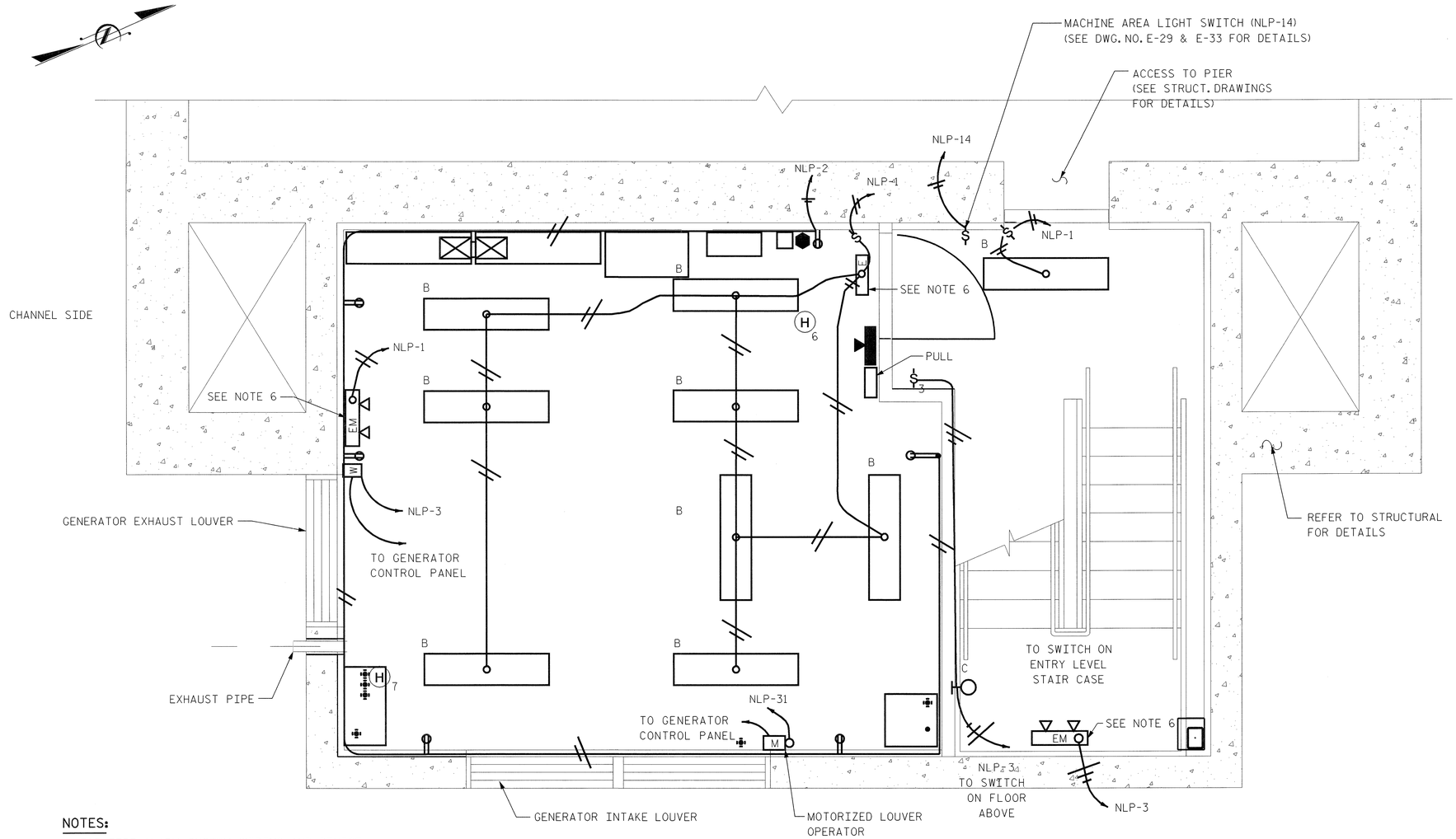

GENERATOR ROOM - 1 ST FLOOR

LEGEND:

- EM — EMERGENCY LIGHT WITH BATTERY BACKUP
- E — SIGN WITH EMERGENCY BATTERY BACKUP
- S — SMOKE DETECTOR
- H — HEAT DETECTOR
- PULL — ADDRESSABLE MANUAL PULL STATION
- HORN/STROBE W/15CD
- HORN/STROBE W/75CD
- F — FIRE ALARM CONTROL PANEL
- INTERCOM STATION (TYPE AS NOTED ON DWG E-9)
- DUPLEX RECEPTACLE
- QUADRUPLEX RECEPTACLE FOR CCTV ONLY
- GFCI RECEPTACLE
- SWITCH
- 3 — 3-WAY SWITCH
- B — 4'-0" LONG PENDANT MOUNTED INDUSTRIAL FLUORESCENT FIXTURE WITH 2-32W T8 LAMPS, MOUNTED MIN OF 8 FT FROM FLOOR; B- INDICATES FIXTURE TYPE
- A — 24"X24" FLUORESCENT CEILING MOUNTED LIGHT; A- INDICATES FIXTURE TYPE
- C — WALL MOUNTED ENCLOSED COMPACT FLUORESCENT FIXTURE WITH 100W LAMP; C- INDICATES FIXTURE TYPE
- NEUTRAL CONDUCTOR
- PHASE CONDUCTOR
- DIMMER SWITCH

NOTES:

1. FOR FIRE ALARM SYSTEM WIRING AND DEVICE DESCRIPTION, SEE FIRE ALARM SYSTEM BLOCK DIAGRAM IN DWG. E-10.
2. FOR INTERCOM SYSTEM WIRING AND DEVICE DESCRIPTION, SEE INTERCOM SYSTEM BLOCK DIAGRAM IN DWG. E-9.
3. THE CONTRACTOR SHALL CORE-DRILL HOLES THROUGH CONCRETE AS NECESSARY TO COMPLETE LIGHTING, FIRE ALARM AND INTERCOM INSTALLATIONS. ALL PENETRATIONS SHALL BE SEALED WITH FIRE PROOF SEALING COMPOUND.
4. ALL CONDUIT INSIDE SHALL BE RIGID GALVANIZED STEEL, UNLESS INDICATED OTHERWISE.
5. COORDINATE LIGHTING SWITCH TO BE LOCATED ON DOOR HANDLE SIDE OF ROOM OR AS DIRECTED BY THE FIELD ENGINEER.
6. ALL EMERGENCY LIGHT AND EXIT SIGNS WITH BATTERY BACKUP SHALL BE CONNECTED AHEAD OF THE SWITCH, FEEDING CIRCUIT.
7. CONTRACTOR SHALL COORDINATE THE DOOR SWING TO AVOID ANY CONFLICT WITH THE EQUIPMENTS.
8. CONTRACTOR SHALL CONNECT SOUTH SIDE INTERCOM AND FIRE ALARM EQUIPMENT TO THE NORTH SIDE VIA THE SUBMARINE TERMINAL CABINETS.

ABBREVIATION:

NLP-4 NORTH LIGHTING PANEL AT CIRCUIT #4

PROJECT NO. B-2532

CRAVEN COUNTY

STATION: 31+21.29 -L-

STATE OF NORTH CAROLINA
DEPARTMENT OF TRANSPORTATION
RALEIGH, NC

CONTROL HOUSE GENERATOR ROOM ELECTRICAL PLAN

NORTH CAROLINA PROFESSIONAL SEAL 031843 ENGINEER GREGORY S. BARON

HNTB NORTH CAROLINA, P.C.
343 E. Six Forks Rd., Suite 200, Raleigh, N.C. 27609

DRAWN BY WL DATE 10/20/06
CHECKED BY MS DATE 10/20/06
DWG. NO. E-37

REVISIONS						SHEET NO.
NO.	BY	DATE	NO.	BY	DATE	S-298
1			3			TOTAL SHEETS
2			4			348

Isberner AT FFLD126
10/19/2006 4:40:17 PM
us1d6572k5 Working Files for 100% submittal\B2532_ELEST Gen Rm Light Plandgn

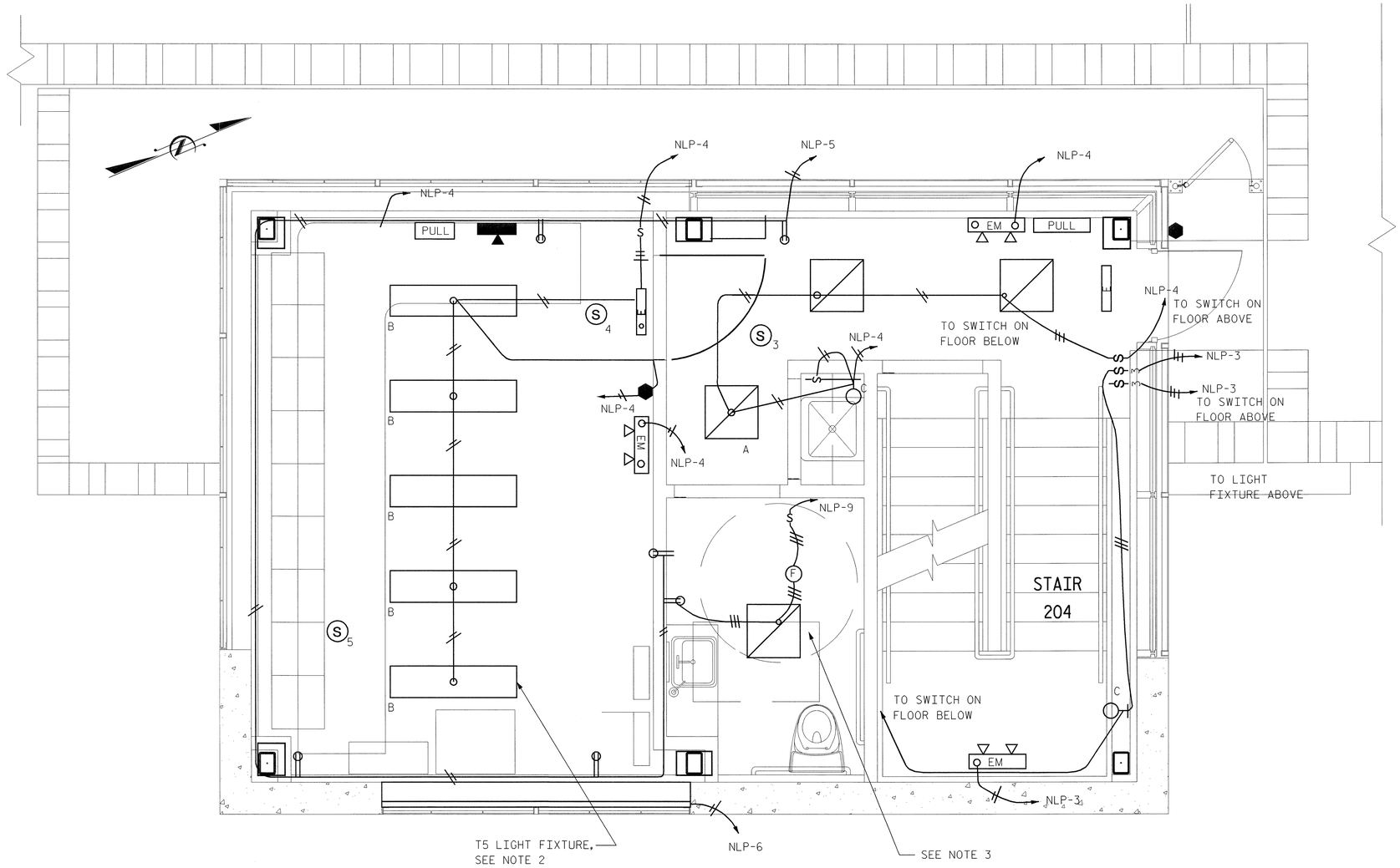

ENTRY LEVEL - 2ND FLOOR

NOTES:

1. FOR NOTES, LEGEND AND ABBEVIATIONS, SEE DWG. NO. E-3 AND E-37.
2. THE STAGGERED LIGHT FIXTURE SHALLIBE INSTALLED AT THE LOCATION SHOWN AND SHALL BE CONNECTED AND CONTROLLED FROM THE CONTROL ROOM LIGHTING.
3. BATHROOM LIGHT AND EXHAUST FAN SHALL BE CONTROLLED FROM A SINGLE SWITCH OCCUPANCE SENSOR. SEE SPECIFICATION FOR MORE DETAILS.
4. PROVIDE TOXIC GAS DETECTORS ON EACH LEVEL ADJACENT TO THE SMOKE DETECTORS IN THE CONTROL HOUSE.

PROJECT NO. B-2532

CRAVEN COUNTY

STATION: 31+21.29 -L-

STATE OF NORTH CAROLINA
DEPARTMENT OF TRANSPORTATION
RALEIGH, NC

CONTROL HOUSE
ENTRY LEVEL
ELECTRICAL PLAN

NORTH CAROLINA PROFESSIONAL SEAL 031843 ENGINEER GREGORY S. BARON

HNTB NORTH CAROLINA, P.C.
343 E. Six Forks Rd., Suite 200, Raleigh, N.C. 27609

DRAWN BY WL DATE 10/20/06
CHECKED BY MS DATE 10/20/06
DWG. NO. E-38

REVISIONS						SHEET NO.
NO.	BY	DATE	NO.	BY	DATE	S-299
1			3			TOTAL SHEETS
2			4			348

jsharmon AT FFLD126
19-OCT-2006 14:40
\\ent-fs2\pw-workdir\Working Files for 102x submittal\B2532_EL_E38 Elec Rm Light Plan.dgn

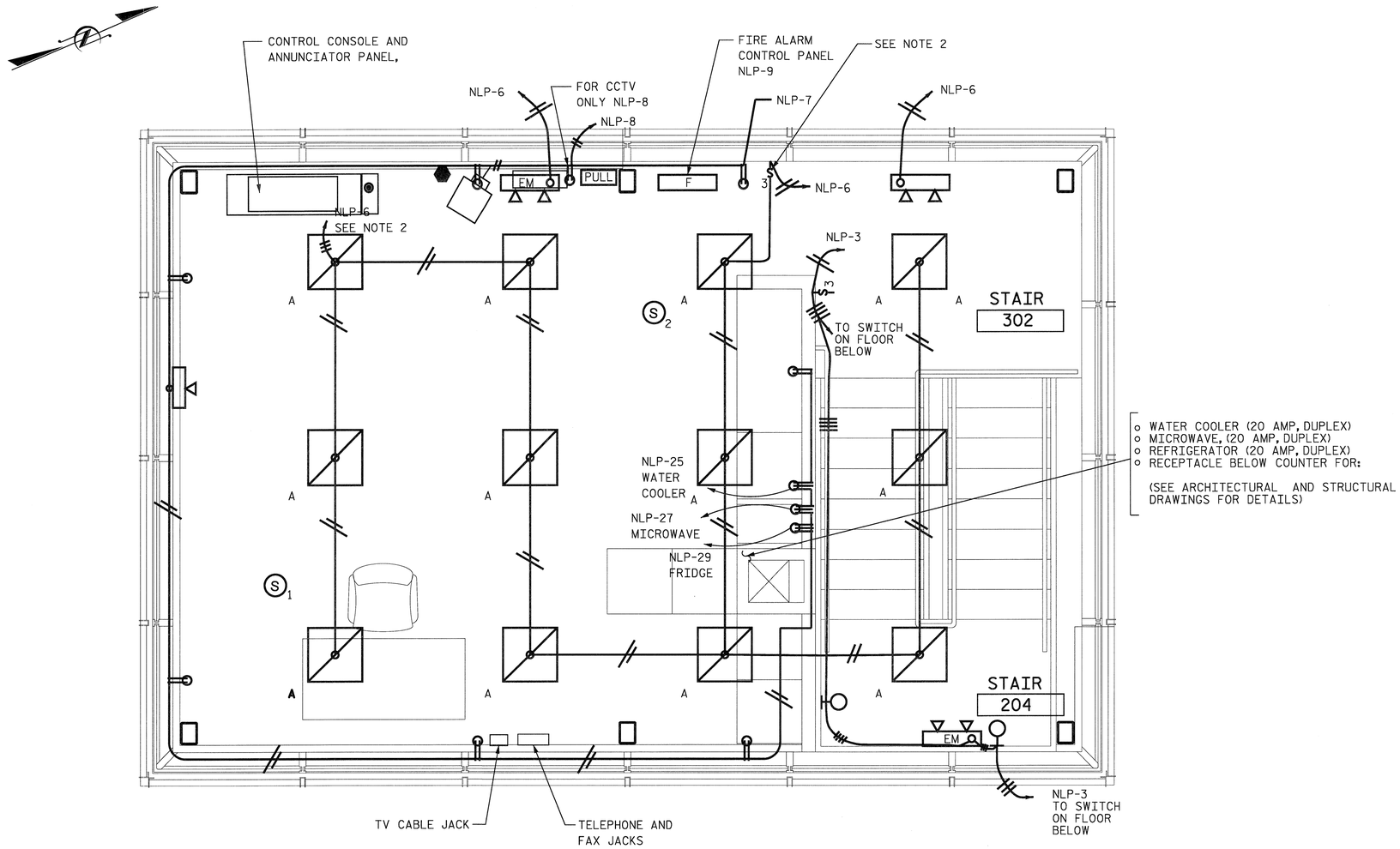

CONTROL ROOM - 3RD FLOOR

NOTES:

1. FOR GENERAL NOTES, LEGEND AND ABBREVIATIONS, SEE DWG. NO. E-3 AND E-37.
2. CONTRACTOR SHALL COORDINATE THE THREE WAY SWITCH AND DIMMER LOCATED IN A CONTROL CONSOLE. FOR DETAILS, SEE DRAWING E-57
3. WHERE EVER POSSIBLE THE WIRING AND BOXES FOR RECEPTACLES, SWITCHES AND JACKS SHALL BE CONCEALED IN FINISHED WALLS.

PROJECT NO. B-2532

CRAVEN COUNTY

STATION: 31+21.29 -L-

STATE OF NORTH CAROLINA
DEPARTMENT OF TRANSPORTATION
RALEIGH, NC

CONTROL HOUSE CONTROL ROOM ELECTRICAL PLAN

NORTH CAROLINA PROFESSIONAL SEAL 031843 ENGINEER GREGORY S. BARON

HNTB NORTH CAROLINA, P.C.
343 E. Six Forks Rd., Suite 200, Raleigh, N.C. 27609

DRAWN BY WL DATE 9/26/06
CHECKED BY MS DATE 9/26/06
DWG. NO. E-39

REVISIONS						SHEET NO.
NO.	BY	DATE	NO.	BY	DATE	S-300
1			3			TOTAL SHEETS
2			4			348

fpinthagen AT FTLD103
09/27/2006 14:32
\\NCFF-fpsf3\e\Working Files for 100% submittal\B2532_ELE39 Con Rm Light Plan.dgn

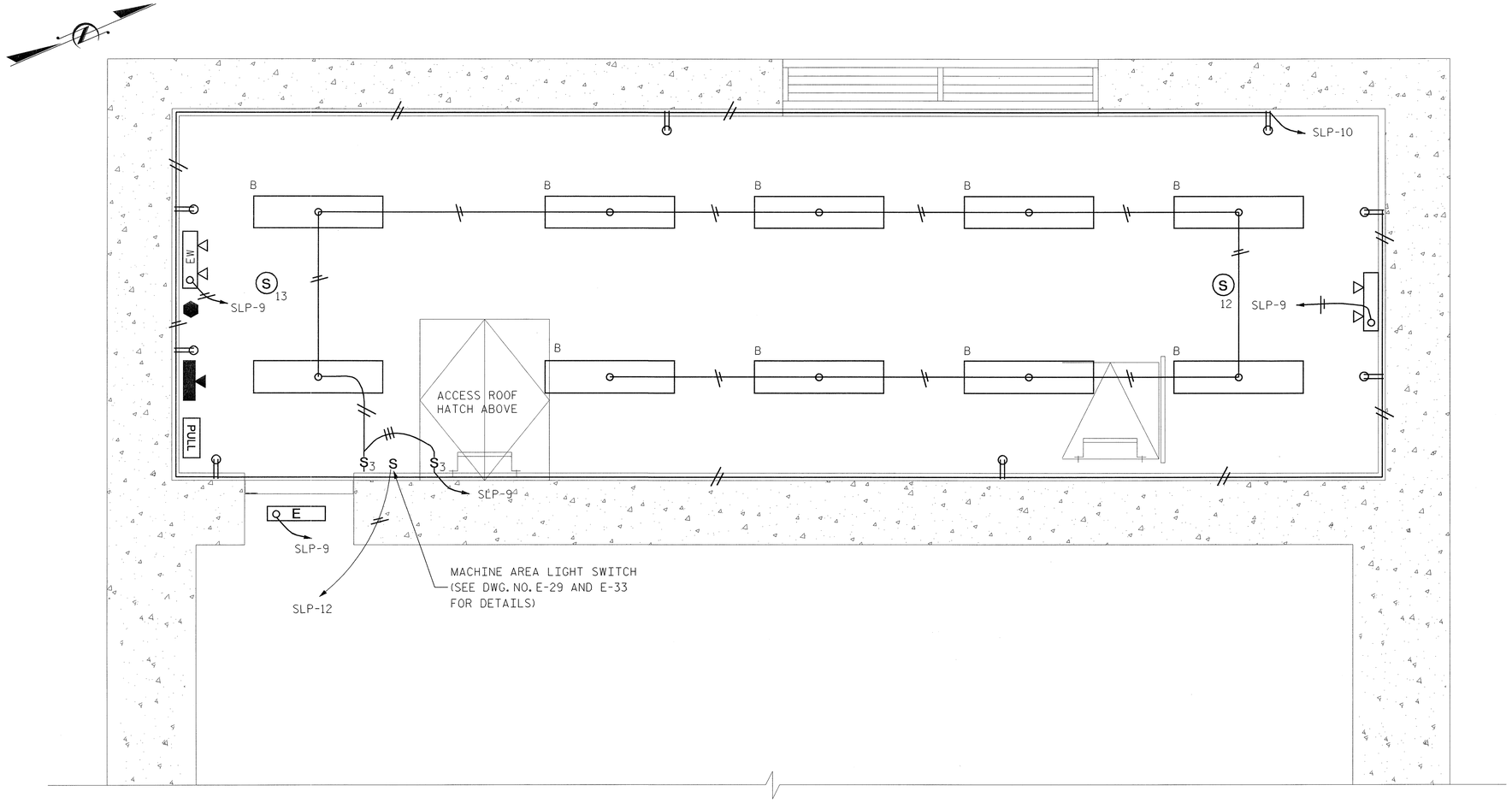

LEGEND:

- EM — EMERGENCY LIGHT WITH BATTERY BACKUP
- E — SIGN WITH EMERGENCY BATTERY BACKUP
- S — SMOKE DETECTOR
- H — HEAT DETECTOR
- PULL — ADDRESSABLE MANUAL PULL STATION
- TRUE ALERT HORN/STROBE W/15CD
- TRUE ALERT HORN/STROBE W/75CD
- F — FIRE ALARM CONTROL PANEL
- INTERCOM STATION
- DUPLEX RECEPTACLE
- QUADRUPLEX RECEPTACLE FOR CCTV ONLY
- GFCI RECEPTACLE
- S — SWITCH
- S3 — 3-WAY SWITCH
- B — 12"X48" RECESSED FLUORESCENT LIGHT, 2-32W LAMPS B- INDICATES FIXTURE TYPE
- A — 24"X24" FLUORESCENT CEILING MOUNTED LIGHT A- INDICATES FIXTURE TYPE
- C — INCANDESCENT WALL MOUNTED UNIT C- INDICATES FIXTURE TYPE
- NEUTRAL CONDUCTOR
- PHASE CONDUCTO
- W — MOTORIZED LOUVER OPERATOR
- DIMMER SWITCH

ABBREVIATION:

SLP-4 SOUTH LIGHTING PANEL AT CIRCUIT #4

SOUTH ELECTRICAL ROOM

NOTES:

1. FOR FIRE ALARM SYSTEM WIRING AND DEVICE DESCRIPTION, SEE FIRE ALARM SYSTEM BLOCK DIAGRAM.
2. FOR INTERCOM SYSTEM WIRING AND DEVICE DESCRIPTION, SEE INTERCOM SYSTEM BLOCK DIAGRAM.
3. THE CONTRACTOR SHALL CORE-DRILL HOLES THROUGH CONCRETE AS NECESSARY TO COMPLETE LIGHTING, FIRE ALARM AND INTERCOM INSTALLATIONS. ALL PENETRATIONS SHALL BE SEALED WITH FIRE PROOF SEALING COMPOUND.
4. ALL CONDUIT INSIDE SHALL BE RIGID GALVANIZED STEEL, UNLESS INDICATED OTHERWISE.
5. COORDINATE LIGHTING SWITCH TO BE LOCATED ON DOOR HANDLE SIDE OF ROOM OR AS DIRECTED BY THE FIELD ENGINEER.
6. FOR NOTES, SEE DWG. NO. E-3.

PROJECT NO. B-2532

CRAVEN COUNTY

STATION: 31+21.29 -L-

NORTH CAROLINA PROFESSIONAL SEAL 031843 ENGINEER GREGORY S. BARON

STATE OF NORTH CAROLINA
DEPARTMENT OF TRANSPORTATION
RALEIGH, NC

SOUTH ELECTRICAL ROOM
ELECTRICAL PLAN

HNTB NORTH CAROLINA, P.C.
343 E. Six Forks Rd., Suite 200, Raleigh, N.C. 27609

DRAWN BY WL DATE 10/20/06
CHECKED BY MS DATE 10/20/06
DWG. NO. E-40

REVISIONS						SHEET NO.
NO.	BY	DATE	NO.	BY	DATE	S-301
1			3			TOTAL SHEETS
2			4			348

Jsherman AT FFLD126
19-OCT-2006 14:00
u:\f42673\e1\Working Files for 100% submittal\B2532_EL_E40 S Elec Rm Light Plan.dgn

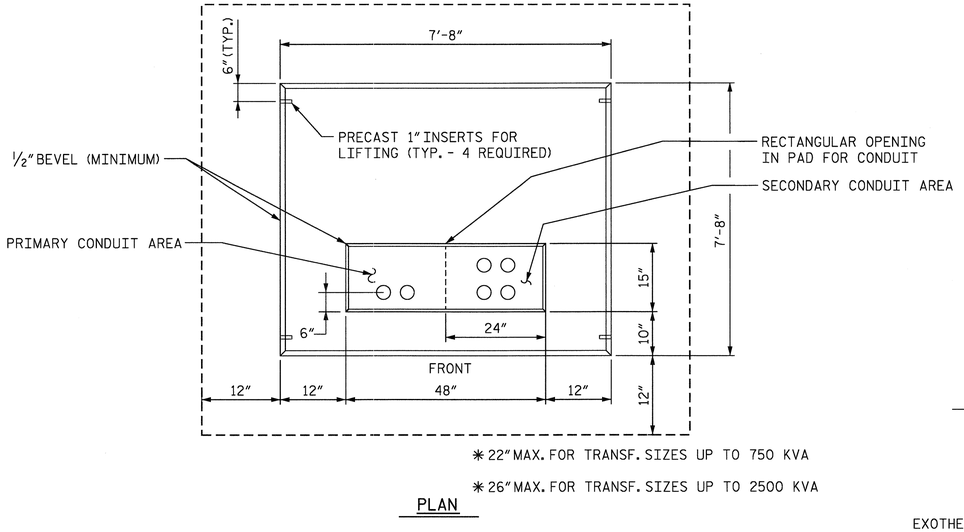

* 22" MAX. FOR TRANSF. SIZES UP TO 750 KVA

* 26" MAX. FOR TRANSF. SIZES UP TO 2500 KVA

PLAN

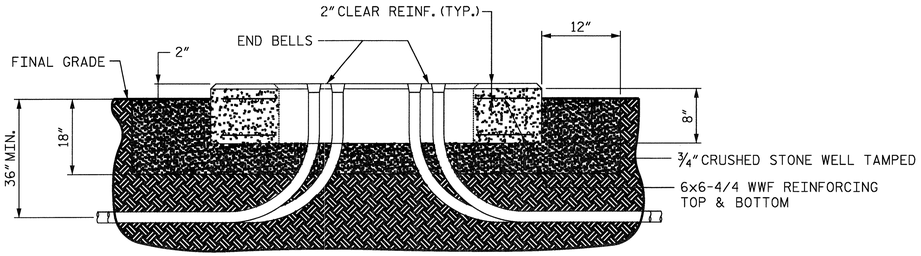

APPROXIMATE WEIGHT = 4450 POUNDS
CONCRETE = 1.1 CUBIC YARDS

ELEVATION

FIELD - POURED TRANSFORMER PAD

NOT TO SCALE

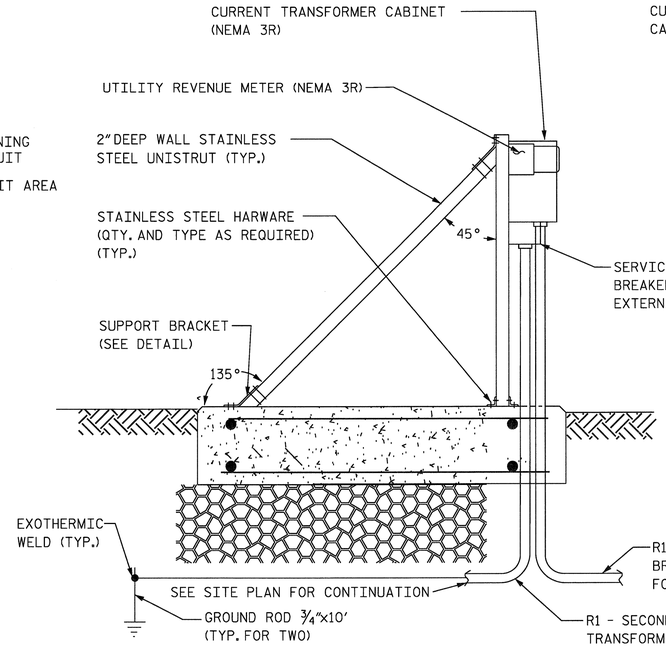

SERVICE ENTRANCE EQUIPMENT - SIDE VIEW

NOT TO SCALE

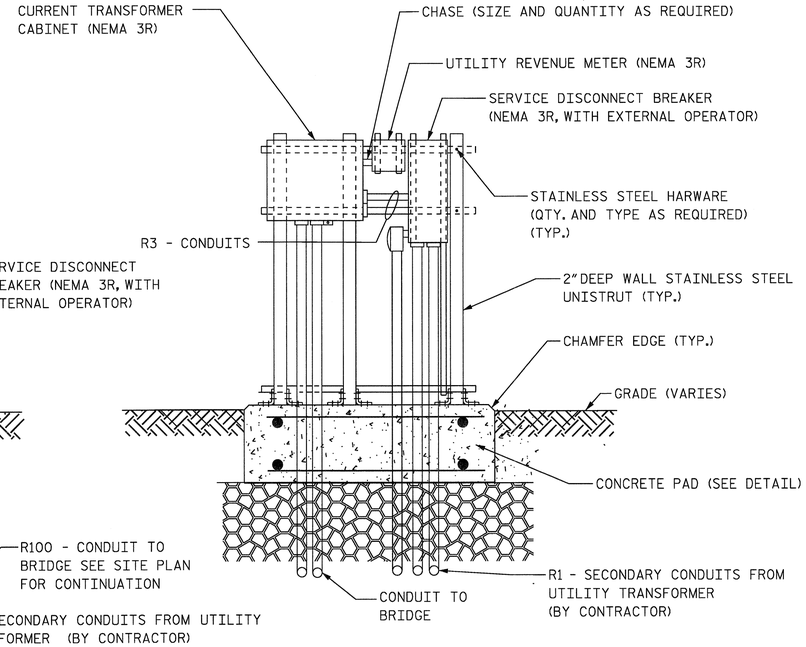

SERVICE ENTRANCE EQUIPMENT - ELEVATION

NOT TO SCALE

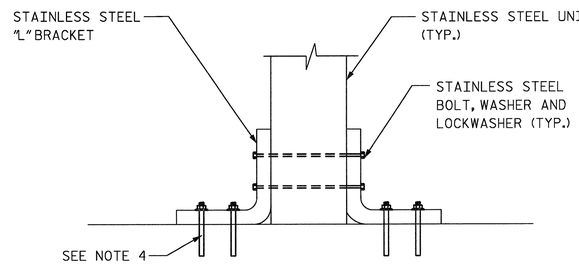

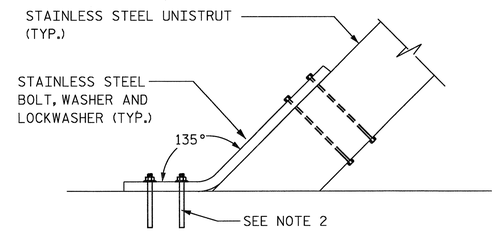

STAINLESS STEEL - SUPPORT BRACKET

NOT TO SCALE

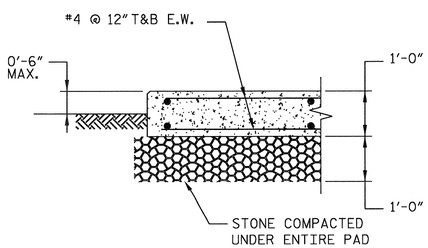

CONCRETE PAD DETAIL

NOT TO SCALE

UTILITY NOTE:

1. TRANSFORMER PAD SHALL BE AS REQUIRED BY THE UTILITY. SEE UTILITY PLANS. CONTRACTOR SHALL INSTALL TRANSFORMER PAD AND CONDUIT AND SHALL PULL AND COIL WIRES FROM THE SERVICE DISCONNECT BREAKER TO THE PAD FOR TERMINATION BY THE UTILITY COMPANY.

CONCRETE PAD NOTES:

1. THE SERVICE ENTRANCE EQUIPMENT PAD SHALL CONFORM TO A.C.I. 318-02 "BUILDING CODE" AND "A.C.I. DETAILING MANUAL" ACI SP66(94).
2. ALL CONCRETE SHALL HAVE A COMPRESSIVE STRENGTH OF 4,000 PSI. THIS CONCRETE SHALL HAVE A MINIMUM TYPE II CEMENT CONTENT OF 6.5 BAGS PER CUBIC YARD, 5.0 GALLONS OF WATER PER BAG (W/C=0.45) & 6%+/- AIR ENTRAINMENT SUCH THAT THE HARDENED WEIGHT IS 145% +/- LBS/CUBIC FOOT.
3. ALL REINFORCING STEEL SHALL HAVE A MINIMUM YIELD STRENGTH OF Fy=60 KSI. ALSO SHALL BE NEW DEFORMED EPOXY COATED BILLET-STEEL CONFORMING TO ASTM A615-01b GRADE 60.
4. SECURE TO CONCRETE PAD VIA EPOXY TYPE ANCHOR BOLTS, WITH MINIMUM 1 1/2" EMBEDMENT. QUANTITY AND SIZE AS REQUIRED.

PROJECT NO. B-2532

CRAVEN COUNTY

STATION: 31+21.29 -L-

STATE OF NORTH CAROLINA
DEPARTMENT OF TRANSPORTATION
RALEIGH, NC

ELECTRICAL SERVICE DETAILS

NORTH CAROLINA PROFESSIONAL SEAL 031843 ENGINEER GREGORY S. BARON

HNTB NORTH CAROLINA, P.C.
343 E. Six Forks Rd., Suite 200, Raleigh, N.C. 27609

DRAWN BY WL DATE 9/26/06
CHECKED BY MS DATE 9/26/06
DWG. NO. E-41

REVISIONS						SHEET NO.
NO.	BY	DATE	NO.	BY	DATE	S-302
1			3			TOTAL SHEETS
2			4			348

fgoldsberg AT_FFLD103
03-OCT-2006 14:35
\\NFF-fs01\Jw\Working Files for 100% submittal\B2532_ELE41 Elec Serve Det.dgn

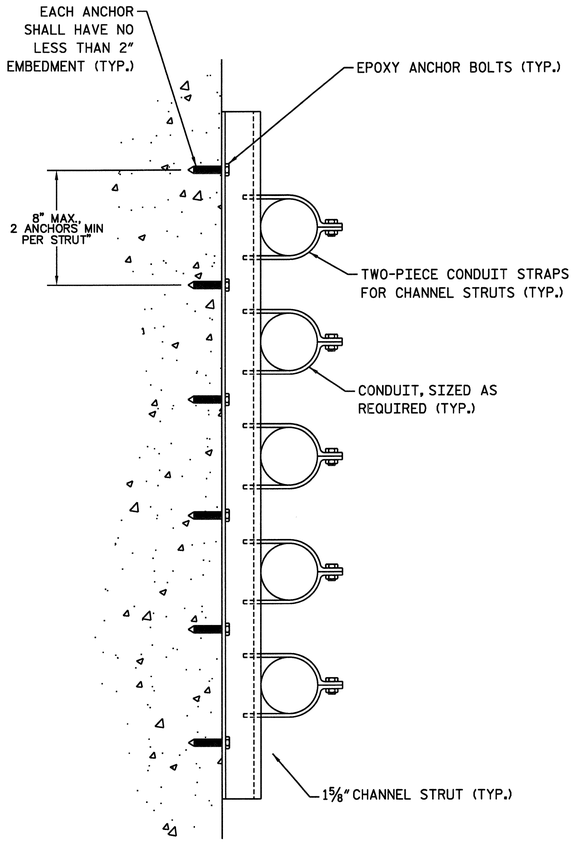

SIDE ELEVATION

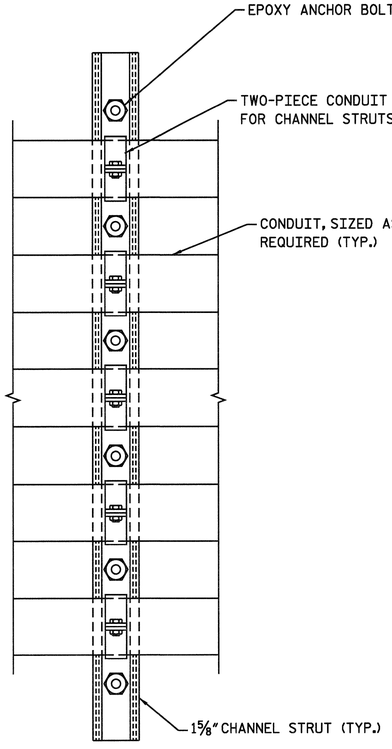

FRONT ELEVATION

CONDUIT MOUNTING TYPE A

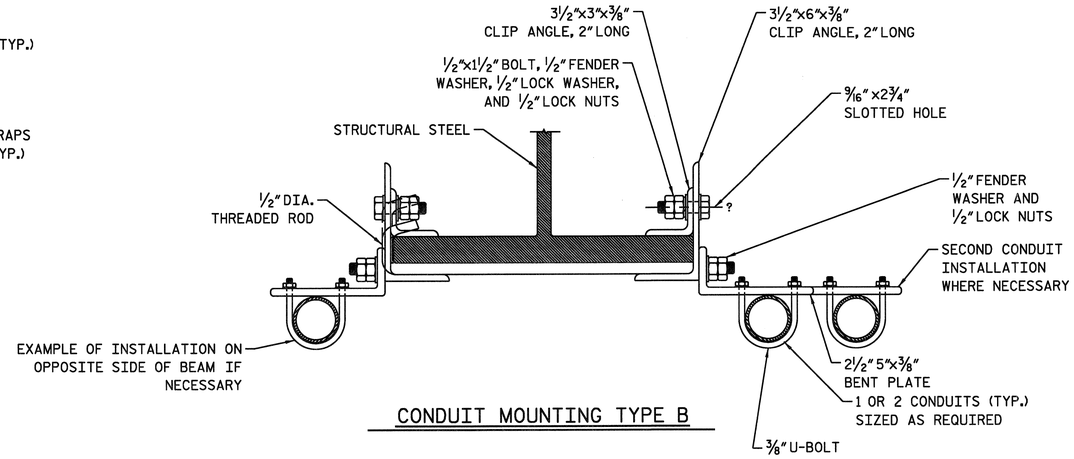

CONDUIT MOUNTING TYPE B

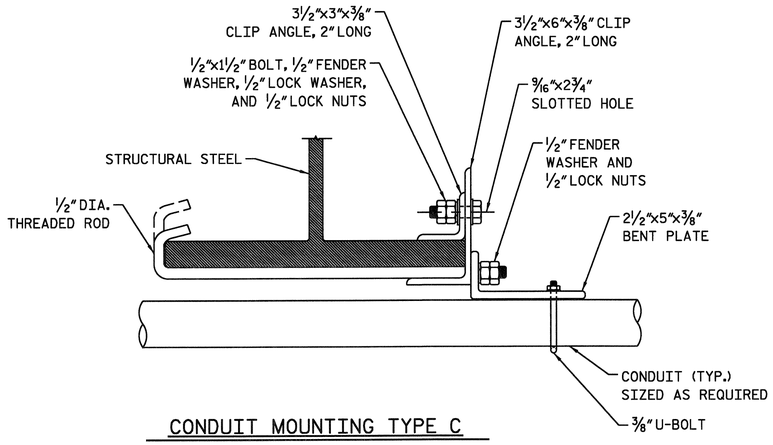

CONDUIT MOUNTING TYPE C

PROJECT NO. B-2532

CRAVEN COUNTY

STATION: 31+21.29 -L-

NOTES:

1. ALL CONDUIT MOUNTING HARDWARE INCLUDING (BUT LIMITED TO) BOLTS, WASHERS, AND NUTS SHALL BE STAINLESS STEEL.

2. UNLESS OTHERWISE NOTED, CONDUIT SUPPORTS (ALL TYPES) SHALL BE INSTALLED AT A MAXIMUM OF 6 FEET ON CENTER.

NORTH CAROLINA PROFESSIONAL SEAL 031843 ENGINEER GREGORY S. BARON

STATE OF NORTH CAROLINA
DEPARTMENT OF TRANSPORTATION
RALEIGH, NC

CONDUIT MOUNTING DETAILS

HNTB HNTB NORTH CAROLINA, P.C.
343 E. Six Forks Rd., Suite 200, Raleigh, N.C. 27609

DRAWN BY FG DATE 9/26/06
CHECKED BY CMC DATE 9/26/06
DWG. NO. E-42

REVISIONS						SHEET NO.
NO.	BY	DATE	NO.	BY	DATE	S-307
1			3			TOTAL SHEETS 348
2			4			

Gpfrideleye AT FFLD103
05-OCT-2006 14:37
\\NFF-fs01\Working Files for 100% submittal\B2532_EL-E42 cond_mount.dgn

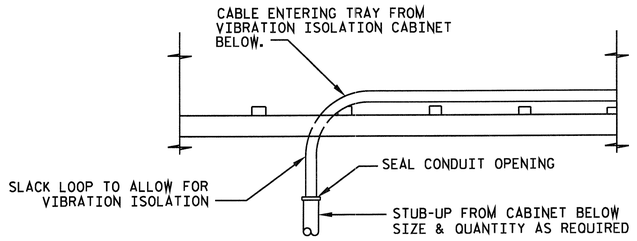

SECTION B-B

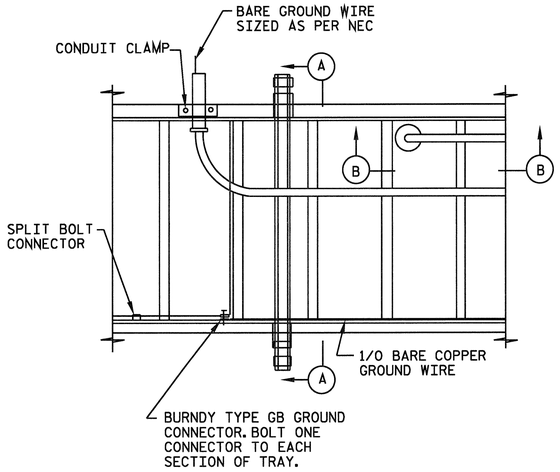

TRAY GROUNDING

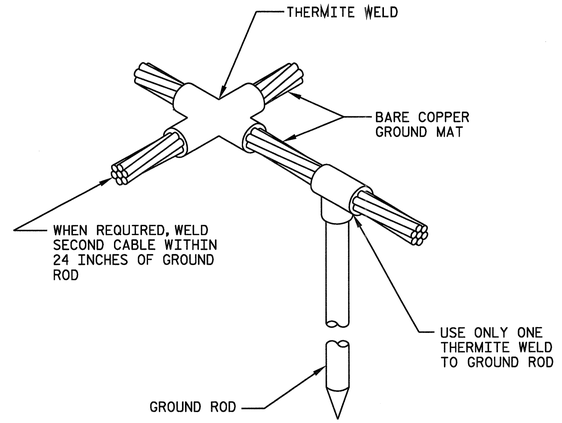

GROUNDING SYSTEM

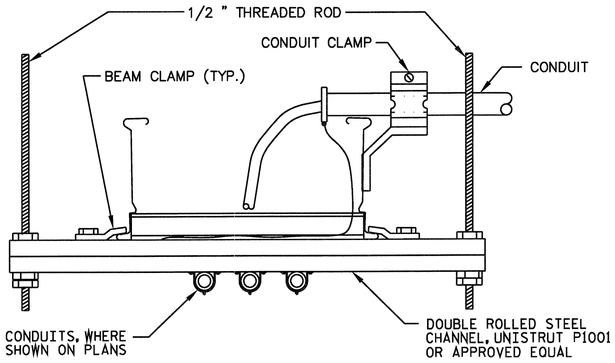

SECTION A-A

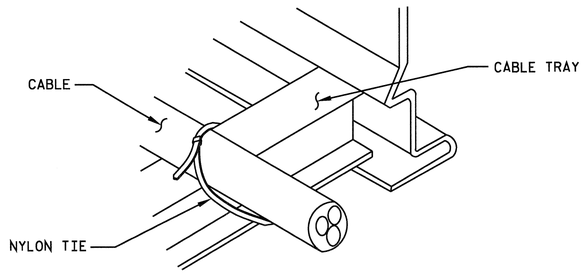

NYLON CABLE TIES

NOTES:

1. ALL CABLE TRAYS SHALL BE MOUNTED AT A MINIMUM OF 9 FEET ABOVE THE FLOOR, TO THE BOTTOM OF THE TRAY SO AS TO CLEAR PENDANT MOUNTED FLUORESCENT LIGHTING FIXTURES.

2. CABLE TRAYS SHALL BE LAID OUT IN THE LOCATIONS SHOWN ON THE CONTROL HOUSE AND SOUTH ELECTRIC ROOM EQUIPMENT PLANS.

3. ALL CABLE TRAY HARDWARE SHALL BE OBTAINED FROM THE SAME CABLE TRAY MANUFACTURER SO AS TO INSURE COMPATIBILITY.

4. THE CONTRACTOR MAY SUBMIT AN ALTERNATE CABLE TRAY SCHEME FOR APPROVAL BY THE ENGINEER.

5. THE SIZES OF EACH CABLE TRAY SHALL BE AS DETERMINED IN THE FIELD IN ACCORDANCE WITHIN NEC REQUIREMENTS.

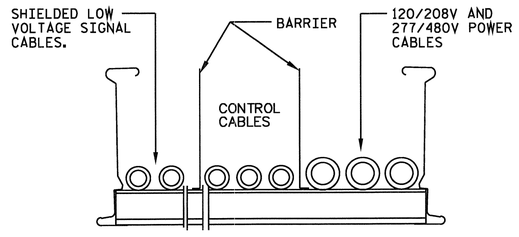

BARRIER STRIP DETAIL

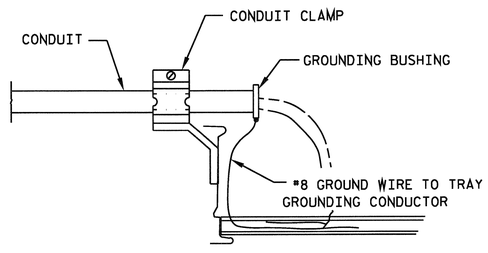

CONDUIT TO TRAY ADAPTER

PROJECT NO. B-2532

CRAVEN COUNTY

STATION: 31+21.29 -L-

STATE OF NORTH CAROLINA
DEPARTMENT OF TRANSPORTATION
RALEIGH, NC

CABLE TRAY DETAILS

NORTH CAROLINA PROFESSIONAL SEAL 031843 ENGINEER GREGORY S. BARON

HNTB HNTB NORTH CAROLINA, P.C.
343 E. Six Forks Rd., Suite 200, Raleigh, N.C. 27609

DRAWN BY FG DATE 9/26/06
CHECKED BY CMC DATE 9/26/06
DWG. NO. E-43

REVISIONS						SHEET NO.
NO.	BY	DATE	NO.	BY	DATE	S-304
1			3			TOTAL SHEETS
2			4			348

fabrication AT FFLD103
05-OCT-2006 14:39
U:\FF4823\e\Working Files for 100% submittal\B2532_FL_E43 cable-trays_det.dgn

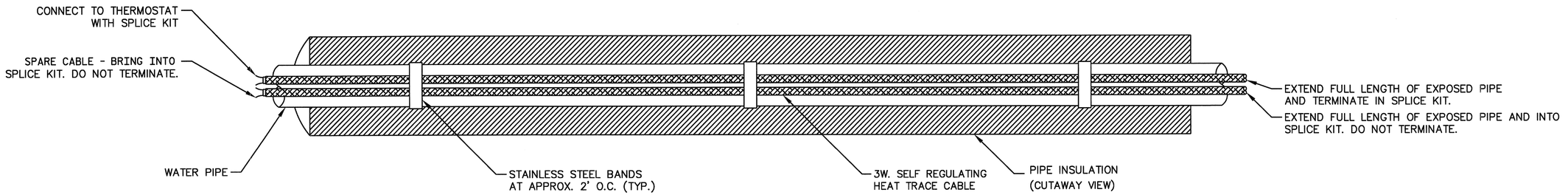

HEAT TRACE CABLE SYSTEM WATER PIPE INSTALLATION

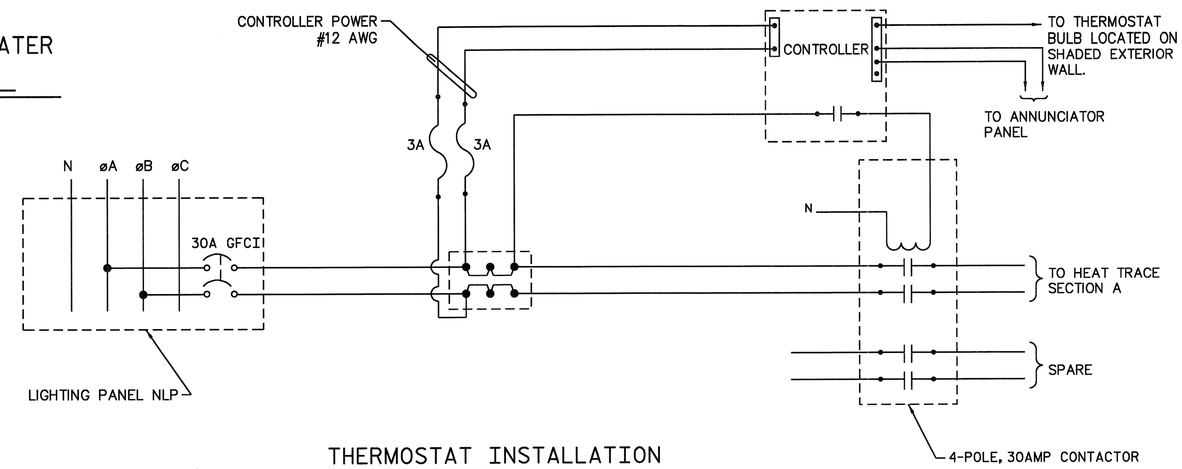

THERMOSTAT INSTALLATION

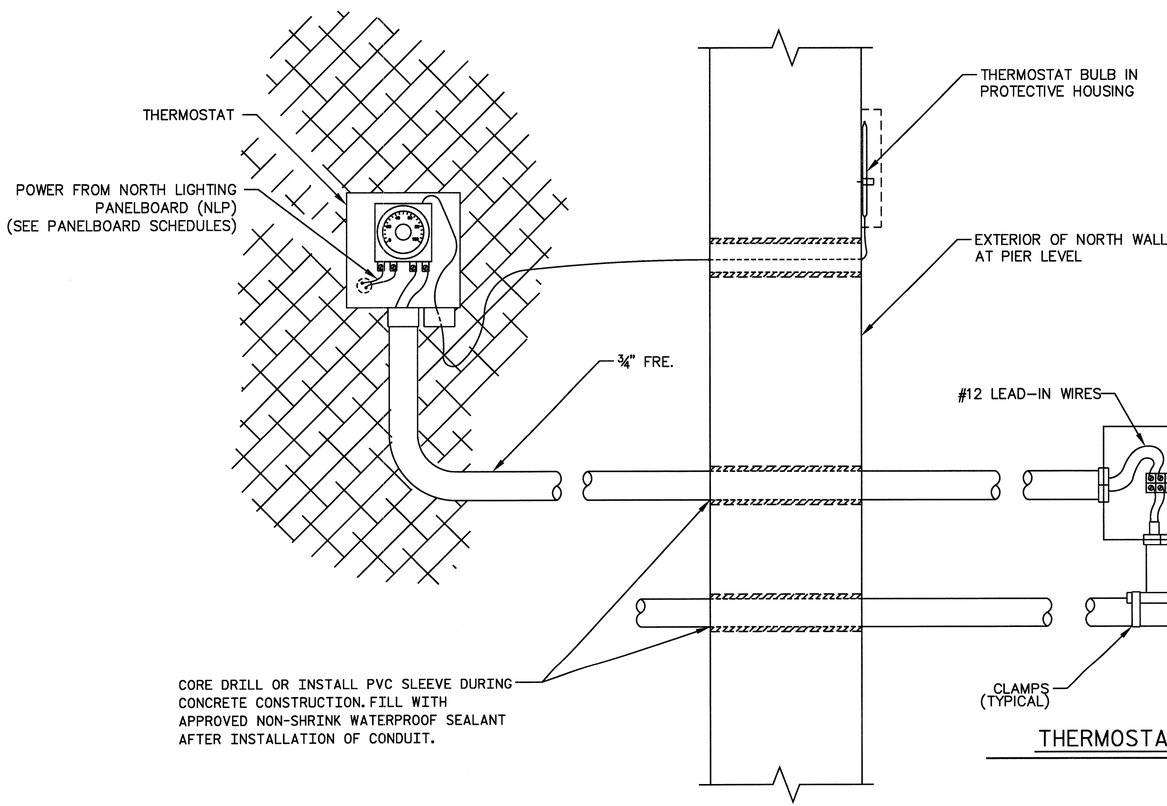

HEAT TRACE CABLE SYSTEM INSTALLATION DETAIL

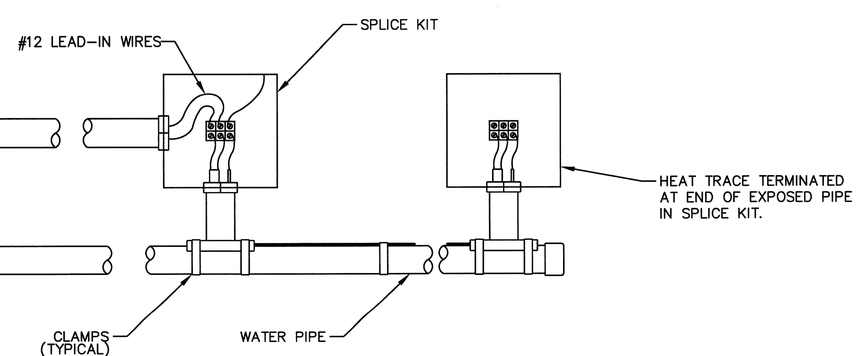

THERMOSTAT INSTALLATION

PROJECT NO. B-2532

CRAVEN COUNTY

STATION: 31+21.29 -L-

NORTH CAROLINA PROFESSIONAL SEAL 031843 ENGINEER GREGORY S. BARON

STATE OF NORTH CAROLINA
DEPARTMENT OF TRANSPORTATION
RALEIGH, NC

HEAT TRACE DETAILS

HNTB NORTH CAROLINA, P.C.
343 E. Six Forks Rd., Suite 200, Raleigh, N.C. 27609

DRAWN BY FG DATE 9/26/06
CHECKED BY CMC DATE 9/26/06
DWG. NO. E-44

REVISIONS						SHEET NO.
NO.	BY	DATE	NO.	BY	DATE	5-305
1			3			TOTAL SHEETS
2			4			348

fgalrlaelaya AT FFLD103
03-OCT-2006 15:25
U:\FF4257.3\e1\Working Files for 100% submittal\B2532_EL_E44 heat-trace_det.dgn

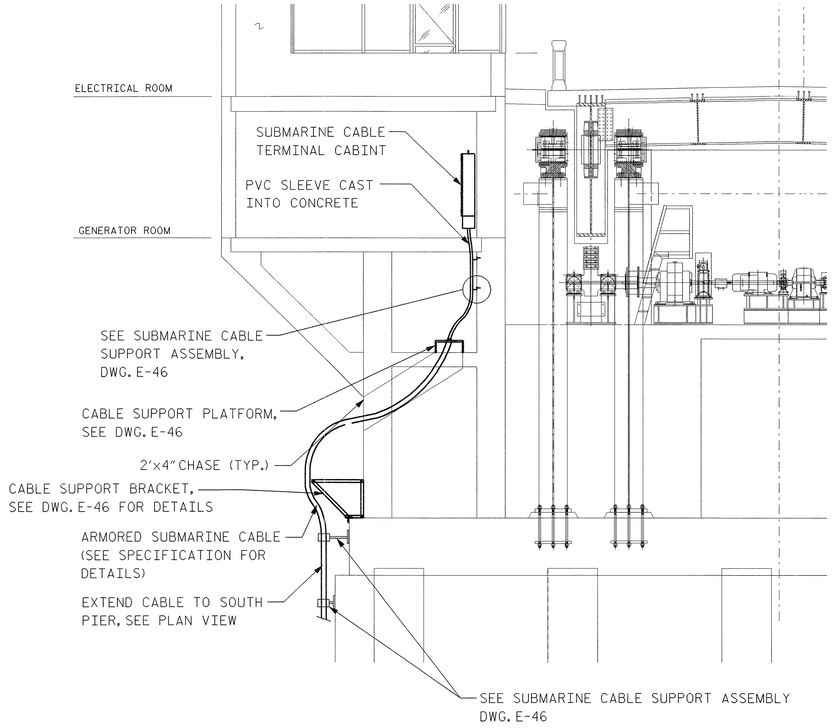

PIER 14 SUB CABLE INSTALLATION
NORTH ELEVATION

NOT TO SCALE

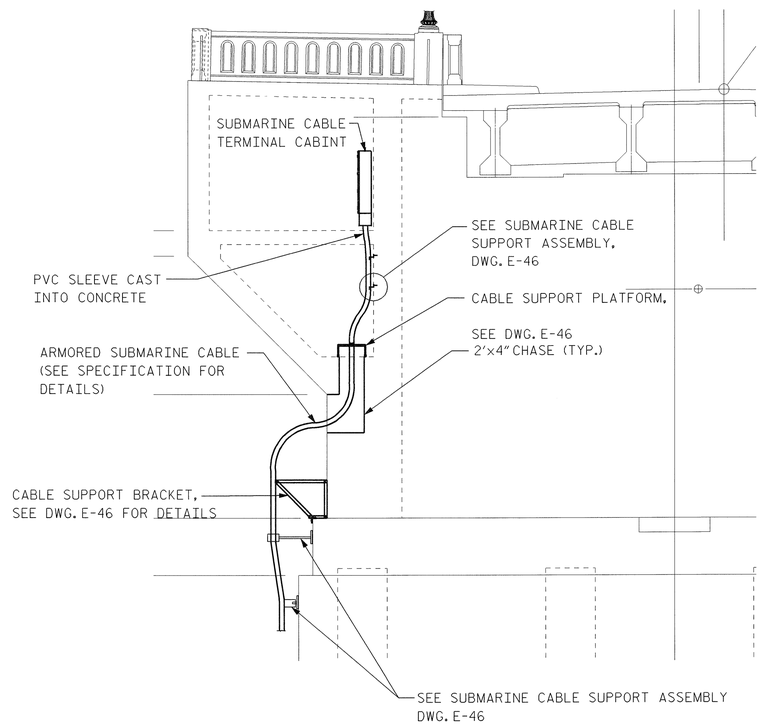

PIER 13 SUB CABLE INSTALLATION
SOUTH ELEVATION

NOT TO SCALE

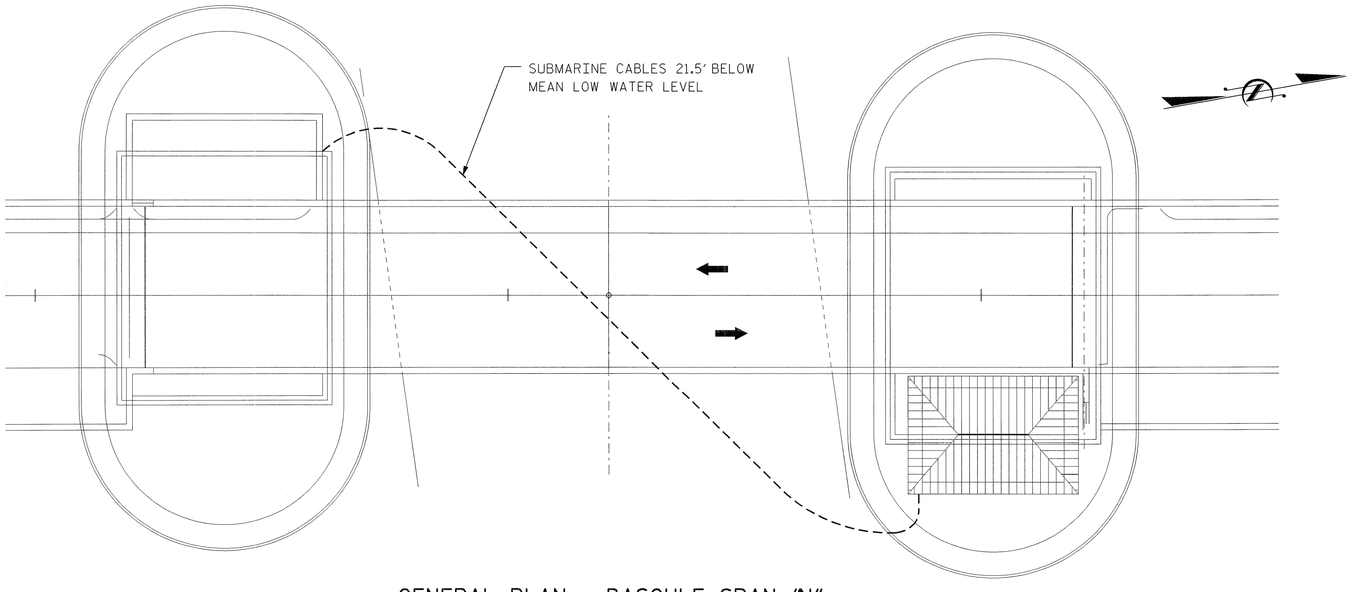

GENERAL PLAN - BASCULE SPAN "N"

NOT TO SCALE

NOTES:

1. THE EXISTING RIVER BOTTOM SHALL BE EXCAVATED AND ALL CONSTRUCTION ACTIVITIES IN THE RIVER SHALL MEET THE NORTH CAROLINA STATE DEPARTMENT OF ENVIRONMENTAL CORRECTION, LOCAL CODES AND APPLICABLE PERMITS.
2. THE TRENCH SHALL BE EXCAVATED SO THAT THE CABLES BE INSTALLED AT THE REQUIRED DEPTH.
3. THE CABLE SHALL BE ALLOWED TO SETTLE FOR A PERIOD OF A MINIMUM OF 48 HOURS AFTER THE LAST CABLE HAS BEEN PLACED, BEFORE ANY RIGID CONNECTION OR ATTACHMENTS ARE MADE. THE CABLES SHALL BE OF SUFFICIENT LENGTH TO ALLOW FOR SLACK IN SETTLEMENT AND TO ALLOW FOR MAKING PERMANENT CONNECTIONS.
4. THE CABINET TERMINAL LOCATIONS ARE SHOWN ON DWG. NO. E-24 & E-28.

PROJECT NO. B-2532

CRAVEN COUNTY

STATION: 31+21.29 -L-

NORTH CAROLINA PROFESSIONAL SEAL 031843 ENGINEER GREGORY S. BACON

STATE OF NORTH CAROLINA
DEPARTMENT OF TRANSPORTATION
RALEIGH, NC

SUBMARINE CABLE INSTALLATION DETAILS

HNTB HNTB NORTH CAROLINA, P.C.
343 E. Six Forks Rd., Suite 200, Raleigh, N.C. 27609

DRAWN BY WL DATE 10/20/06
CHECKED BY MS DATE 10/20/06
DWG. NO. E-45

REVISIONS						SHEET NO.
NO.	BY	DATE	NO.	BY	DATE	S-306
1			3			TOTAL SHEETS
2			4			348

jsterman AT FFLD126
10/20/2006 4:40:
u:\fldata\Working Files for 100%...submittal\B2532_E1_E45 Sub Cable Det..dgn

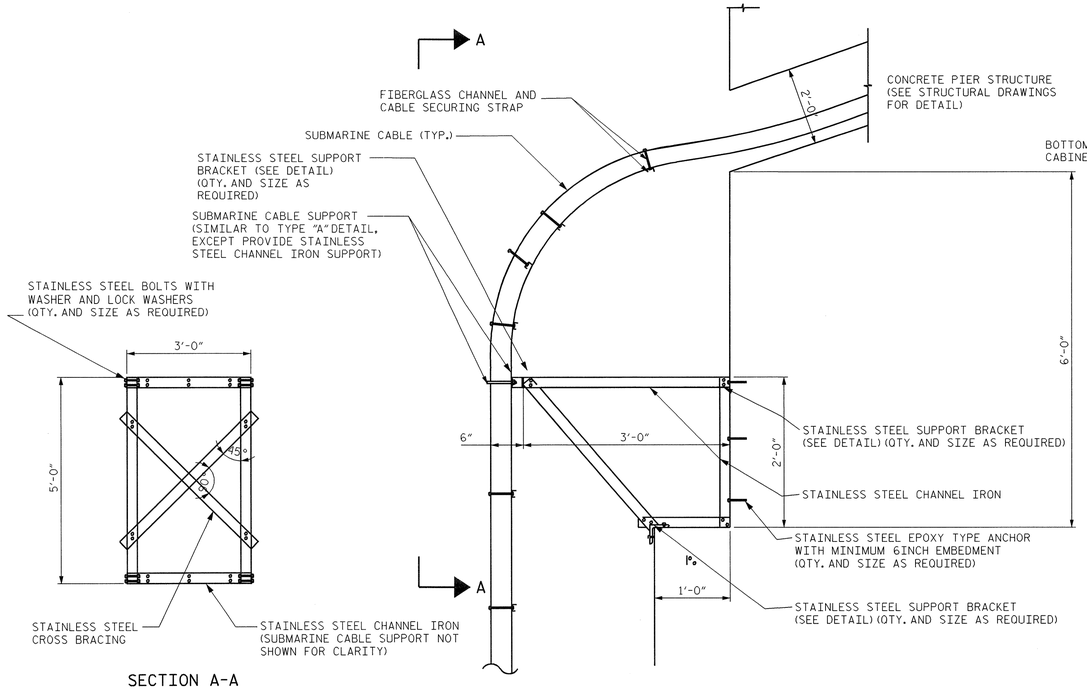

CABLE SUPPORT BRACKET FOR PIER 14

NOTE: THIS DETAIL IS DIAGRAMATIC ONLY. THE CONTRACTOR SHALL SUBMIT DETAILED SHOP DRAWINGS FOR APPROVAL OF SUPPORT BRACKET

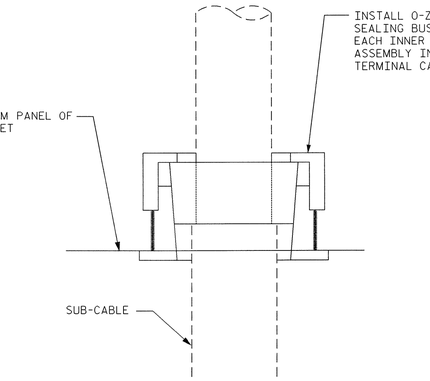

SUBMARINE CABLE ENTRY AT TERMINAL CABINET

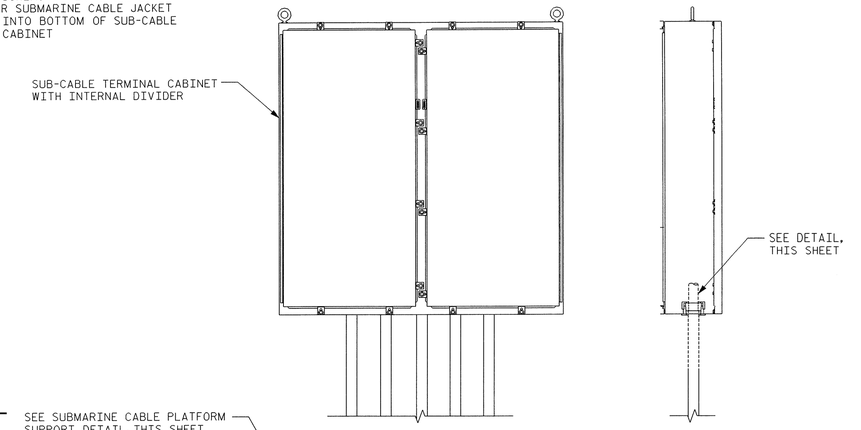

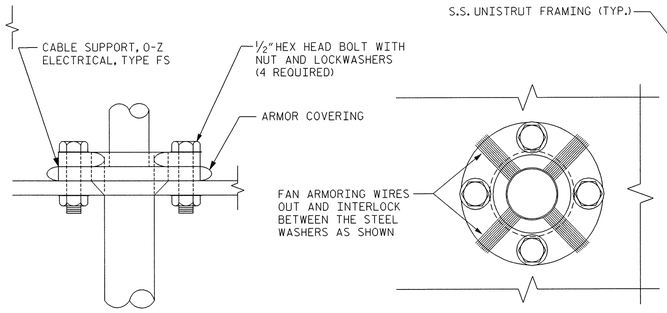

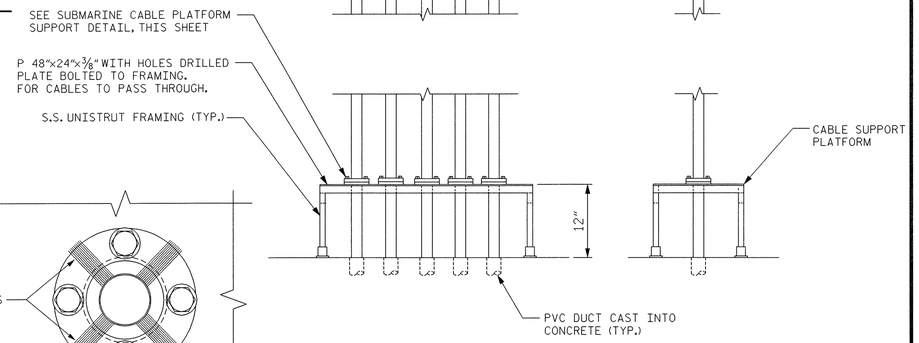

SUBMARINE CABLE TERMINAL CABINET AND CABLE SUPPORT PLATFORM

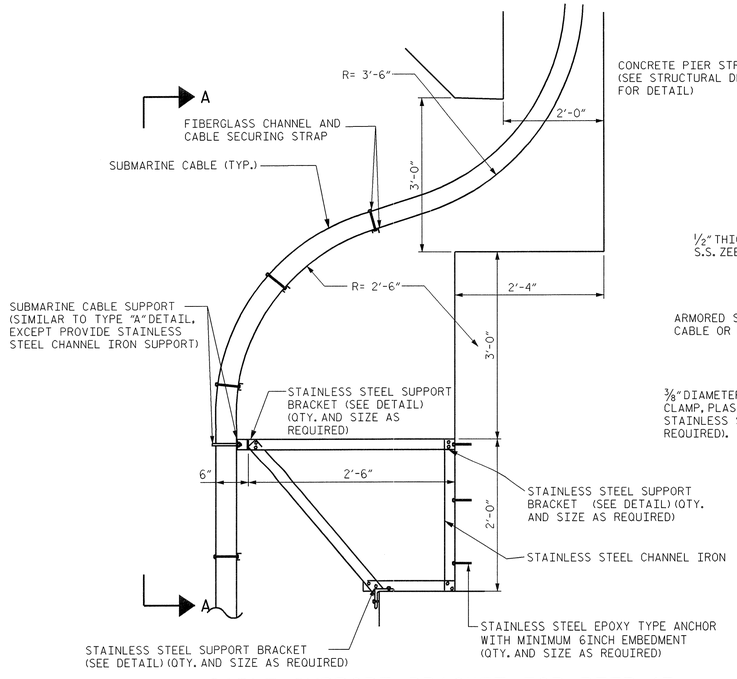

CABLE SUPPORT BRACKET FOR PIER 13

NOTE: THIS DETAIL IS DIAGRAMATIC ONLY. THE CONTRACTOR SHALL SUBMIT DETAILED SHOP DRAWINGS FOR APPROVAL OF SUPPORT BRACKET

SUBMARINE CABLE PLATFORM SUPPORT DETAIL

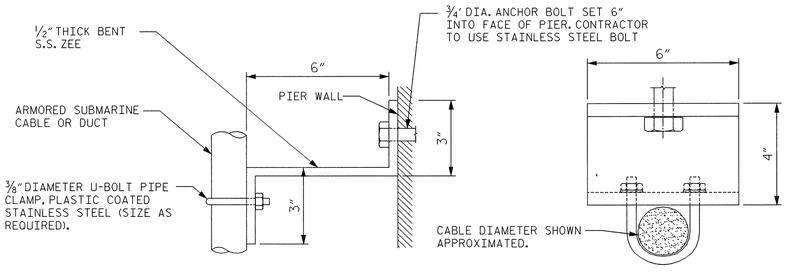

SUBMARINE CABLE SUPPORT ASSEMBLY TYPE "A" DETAIL

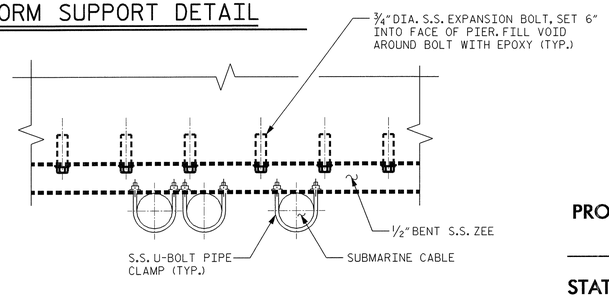

SUBMARINE CABLE SUPPORT ASSEMBLY TYPE "B"

PROJECT NO. B-2532

CRAVEN COUNTY

STATION: 31+21.29 -L-

STATE OF NORTH CAROLINA
DEPARTMENT OF TRANSPORTATION
RALEIGH, NC

SUBMARINE CABLE INSTALLATION DETAILS 2

NORTH CAROLINA PROFESSIONAL SEAL 031843 ENGINEER GREGORY S. BARON

HNTB NORTH CAROLINA, P.C.
343 E. Six Forks Rd., Suite 200, Raleigh, N.C. 27609

DRAWN BY _____ DATE 10/20/06
CHECKED BY _____ DATE 10/20/06

DWG. NO. E-46

REVISIONS						SHEET NO.
NO.	BY	DATE	NO.	BY	DATE	S-307
1			3			TOTAL SHEETS
2			4			348

Isaman AT FFLD126 10/20/2006 8:42:52 AM
I:\ATIPROJ\34 \Working Files for 100% submittal\2532_ELE46 Sub Cable Det. 1.dgn

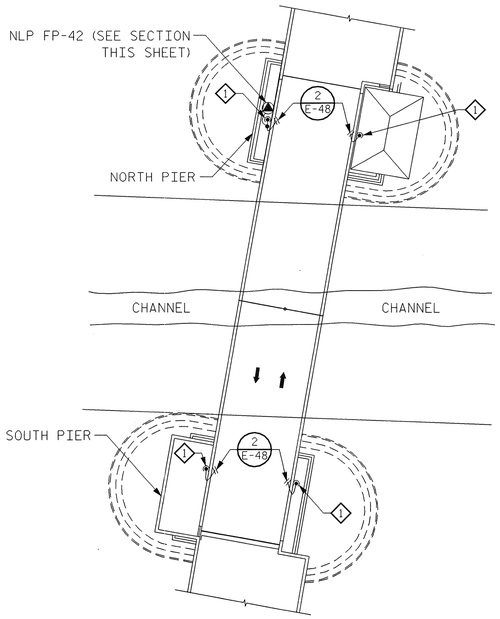

LIGHTNING PROTECTION PLAN

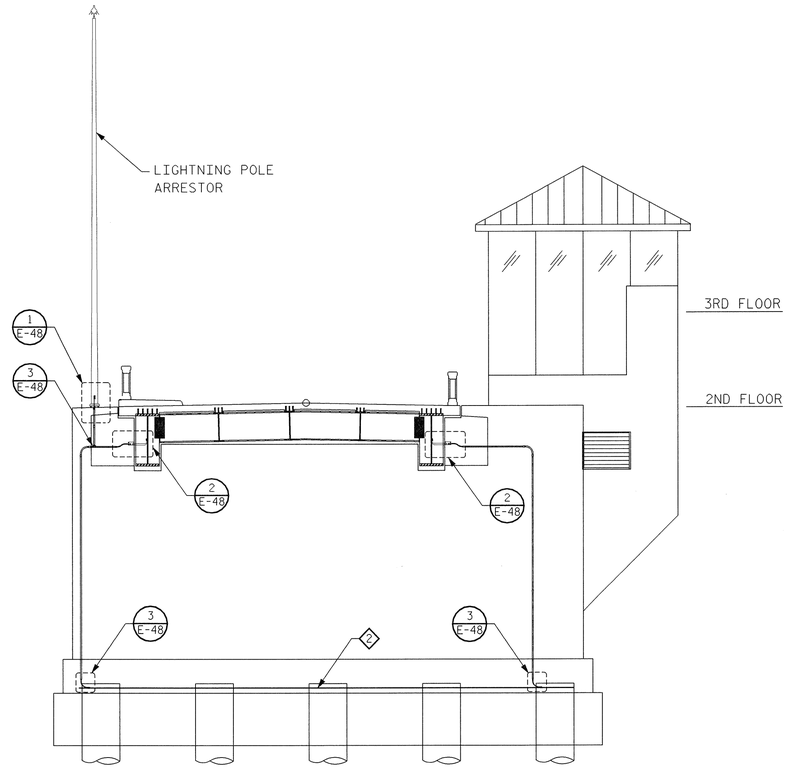

SECTION THROUGH NORTH BASCULE PIER

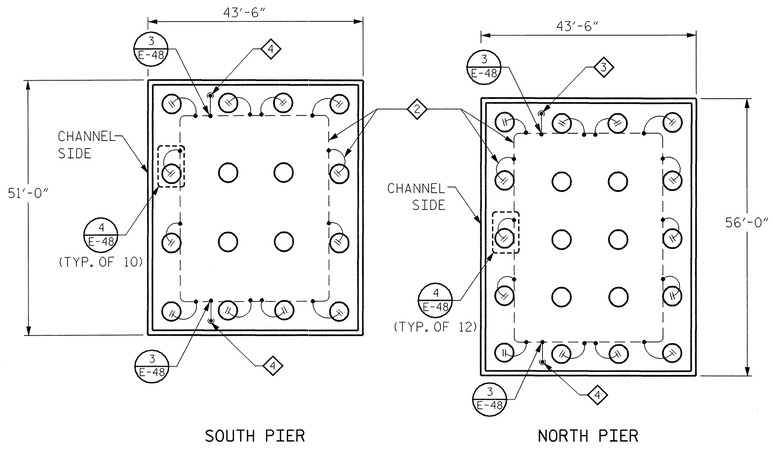

PIER GROUNDING PLAN

NOTES:

1. INSTALLATION SHALL CONFORM TO THESE DRAWINGS. ALL ALTERATIONS SHALL BE APPROVED BY THE DESIGNER BEFORE THEY ARE PERFORMED.
2. NO BEND OF CONDUCTOR SHALL FORM A FINAL INCLUDED ANGLE OF LESS THAN 90 DEGREES AND ALL BENDS SHALL HAVE A MINIMUM RADIUS OF 8 INCHES.
3. ALL LIGHTNING PROTECTION CONDUCTORS SHALL BE FASTENED AT A MINIMUM OF EVERY 36 INCHES ON CENTER.
4. CONNECTIONS TO GROUND RODS OR GROUND LOOP SHALL BE MADE AT A POINT NO LESS THAN 24" AWAY FROM THE FOUNDATION OR FOOTING AND NOT LESS THAN 12" BELOW GRADE.
5. THE COMPLETE LIGHTNING PROTECTION GROUND SYSTEM SHALL HAVE NO MORE THAT 10OHMS OF RESISTANCE AS MEASURES BY THE IEEE FALL OF POTENTIAL METHOD.
6. ALL METAL BODIES OF CONDUCTANCE OR INDUCTANCE WITHIN 15'-0" OF A LIGHTNING PROTECTION CONDUCTOR SHALL BE BONDED TO THE LIGHTNING PROTECTION SYSTEM.
7. BOND TO ELECTRICAL GROUND, DOMESTIC WATER, AND TELEPHONE GROUND TO MAKE ALL SYSTEMS COMMON.
8. ALL REQUIRED 1" FIBERGLASS CONDUIT SHALL BE FURNISHED AND INSTALLED BY THE ELECTRICAL CONTRACTOR.
9. CONDUIT SHALL ROUTE CONDUCTOR IN A MANNER CONSISTENT WITH THE BEND REQUIREMENTS OUTLINED ABOVE.

KEYED NOTES

1. 1" FIBERGLASS CONDUIT DOWN TO PIER GROUNDING SYSTEM. SEE PIER GROUNDING PLAN (THIS SHEET).
2. NLP #19T TINNED COPPER GROUND RING AT TOP OF DRILLED PIERS. CONNECT TO DRILLED PIERS AS INDICATED ON PIER GROUNDING PLAN (THIS SHEET).
3. 1" FIBERGLASS CONDUIT UP TO CONNECTION WITH LIGHTNING PROTECTION POLE.
4. 1" FIBERGLASS CONDUIT UP TO BASCULE BOND CONNECTION.

PROJECT NO. B-2532

CRAVEN **COUNTY**

STATION: 31+21.29 -L-

NORTH CAROLINA PROFESSIONAL SEAL 031843 ELECTRICAL ENGINEER GREGORY S. BARON

STATE OF NORTH CAROLINA
DEPARTMENT OF TRANSPORTATION
RALEIGH, NC

LIGHTNING PROTECTION PLAN

HNTB HNTB NORTH CAROLINA, P.C.
343 E. Six Forks Rd., Suite 200, Raleigh, N.C. 27609

DRAWN BY FG DATE 10/20/06
CHECKED BY MSI DATE 10/20/06
DWG. NO. E-47

REVISIONS						SHEET NO.
NO.	BY	DATE	NO.	BY	DATE	S-303
1			3			TOTAL SHEETS
2			4			288

jgherron AT FFLD186
10/19/2006 8:45:40 AM
u:\p\2532\0a Working Files for 100% submittal\B2532_EL_E47 Ltgtn Prot 1.dgn

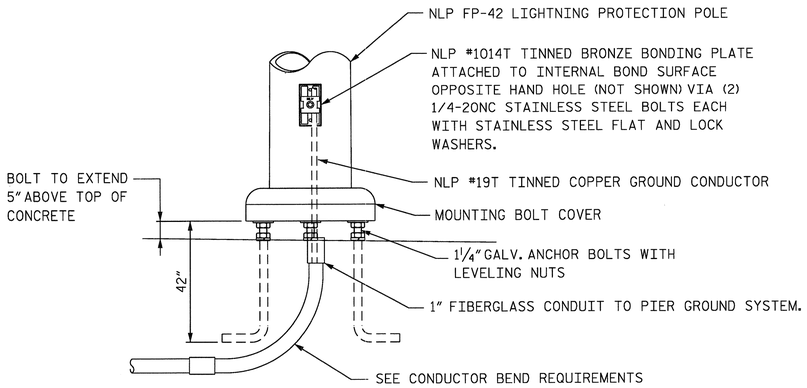

1 — LIGHTNING PROTECTION POLE ARRESTOR GROUND CONNECTION

NOT TO SCALE

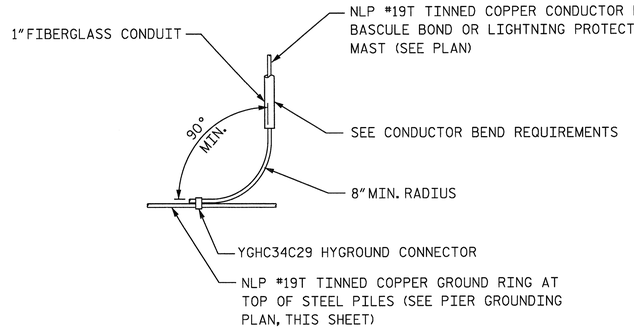

3 — CONNECTION TO PIER GROUND RING

NOT TO SCALE

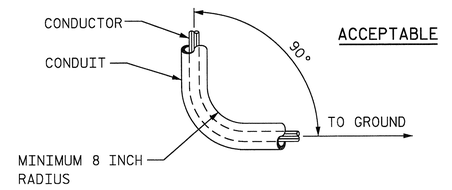

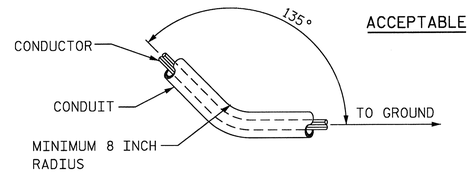

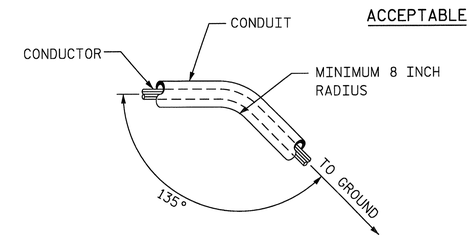

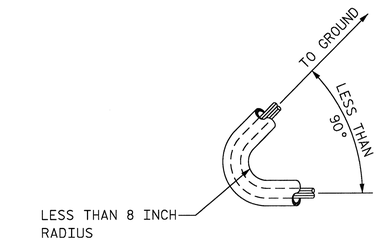

5 — CONDUCTOR BEND REQUIREMENTS

NOT TO SCALE

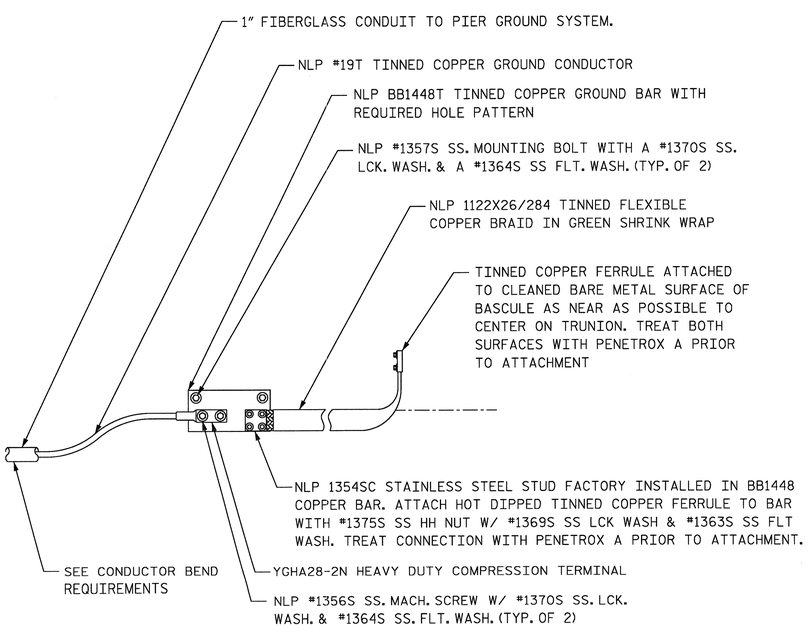

2 — BASCULE BOND CONNECTION

NOT TO SCALE

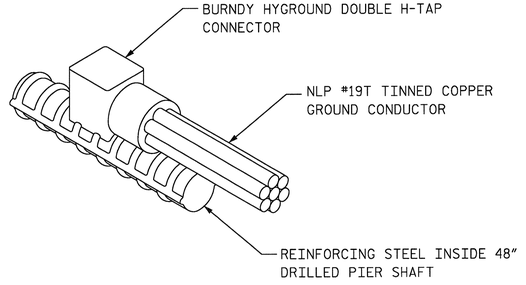

4 — TYPICAL PIER BOND CONNECTION

NOT TO SCALE

PROJECT NO. B-2532

CRAVEN COUNTY

STATION: 31+21.29 -L-

STATE OF NORTH CAROLINA
DEPARTMENT OF TRANSPORTATION
RALEIGH, NC

LIGHTNING PROTECTION DETAILS

NORTH CAROLINA PROFESSIONAL SEAL 031843 ENGINEER GREGORY S. BARON

HNTB HNTB NORTH CAROLINA, P.C.
343 E. Six Forks Rd., Suite 200, Raleigh, N.C. 27609

DRAWN BY FG DATE 9/26/06
CHECKED BY MSI DATE 9/26/06
DWG. NO. E-48

REVISIONS						SHEET NO.
NO.	BY	DATE	NO.	BY	DATE	S-309
1			3			TOTAL SHEETS
2			4			368

forbington AF FFLD103
05/07/2006 14:43
U:\FFLD\B2532\Working Files for 100% submittal\B2532_EL_E48 Lightn Prot 24in

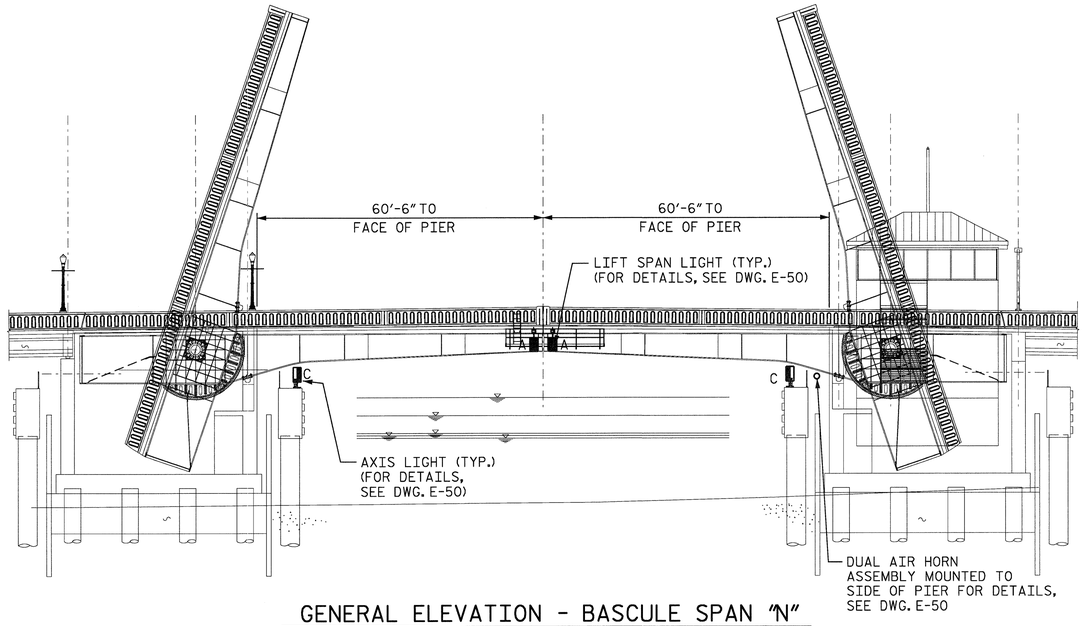

GENERAL ELEVATION - BASCULE SPAN "N"

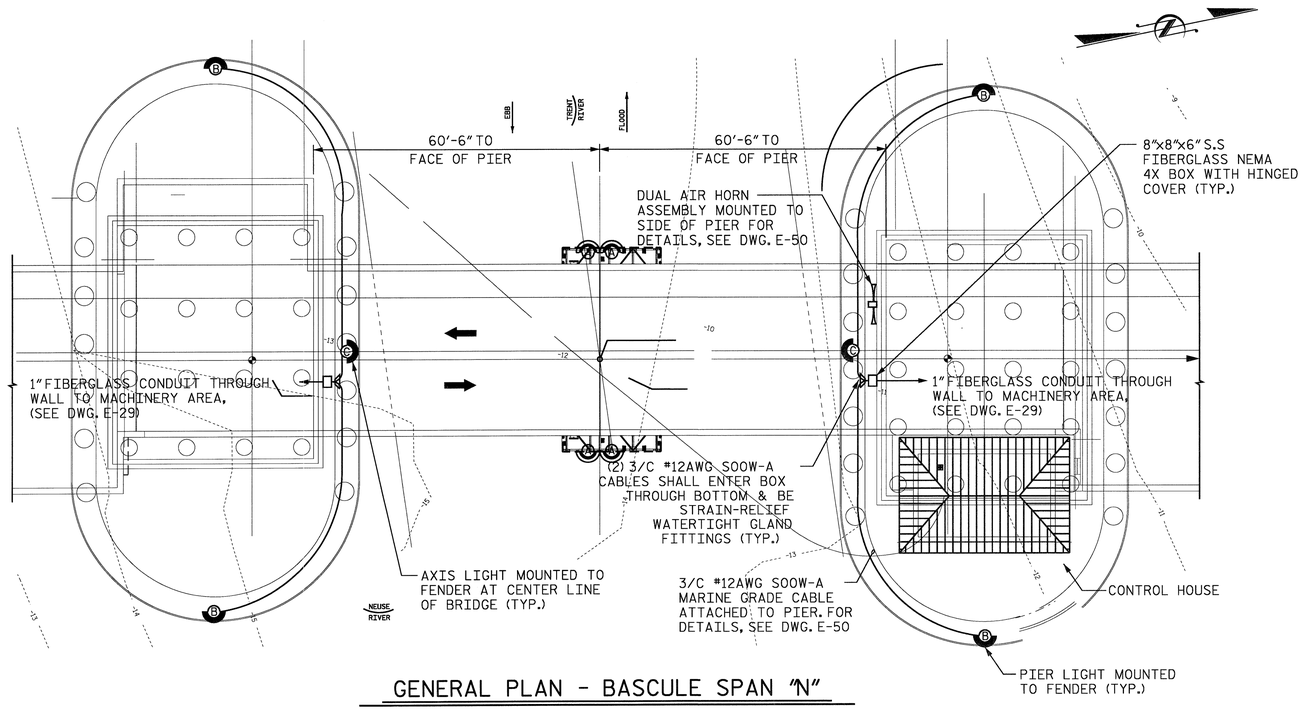

GENERAL PLAN - BASCULE SPAN "N"

NOTES:

1. NAVIGATION LIGHTS SHALL BE AS DESCRIBED IN THE ELECTRICAL SPECIAL PROVISIONS.
2. SEE DRAWING NO E-29 & E-50, FOR DETAIL ON CONDUIT AND WIRING.

LEGEND:

RED / GREEN — A — LIFT SPAN LIGHT - 180° GREEN/RED IN DIRECTION SHOWN
GREEN LIGHT ON WHEN BASULE IS FULLY OPEN FOR NAVIGATION, RED LIGHT FOR ALL OTHER BASULE POSITIONS

B — PIER LIGHT - 180° RED IN DIRECTION SHOWN

C — AXIS LIGHT - 180° RED IN DIRECTION SHOWN

PROJECT NO. B-2532

CRAVEN COUNTY

STATION: 31+21.29 -L-

STATE OF NORTH CAROLINA
DEPARTMENT OF TRANSPORTATION
RALEIGH, NC

NAVIGATION AID
DETAILS 1

NORTH CAROLINA PROFESSIONAL SEAL 031843 ENGINEER GREGORY S. BARON

HNTB HNTB NORTH CAROLINA, P.C.
343 E. Six Forks Rd., Suite 200, Raleigh, N.C. 27609

DRAWN BY FG DATE 9/26/06
CHECKED BY MG DATE 9/26/06
DWG. NO. E49

REVISIONS						SHEET NO.
NO.	BY	DATE	NO.	BY	DATE	S-310
1			3			TOTAL SHEETS
2			4			348

\\gpfs\roles AT: FFLD103
05-OCT-2006 14:44
U:\NF-0507w\Working Files for 1002 submittal\B2532_EI_E49 Nav Aid Det 1.dgn

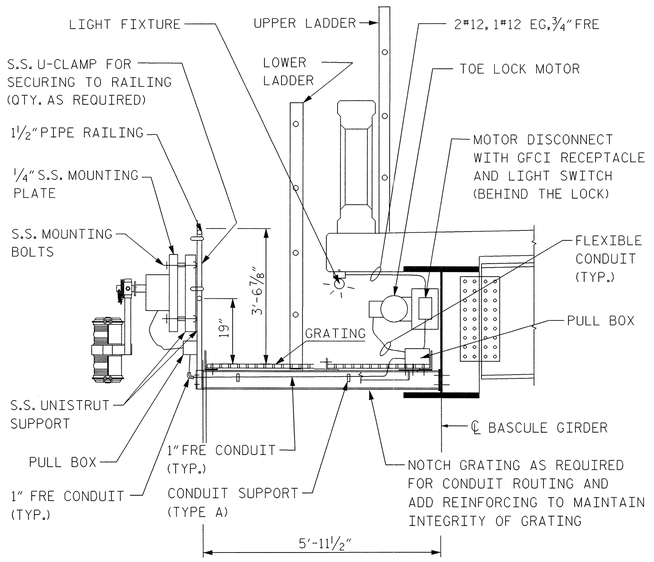

SPAN NAVIGATION LIGHT INSTALLATION DETAIL

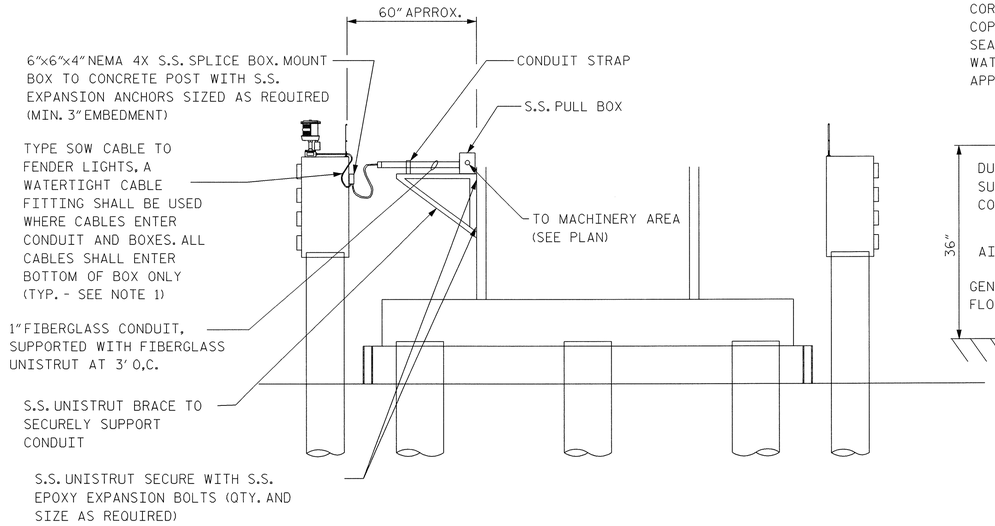

FENDER CONDUIT AND WIRING DETAIL

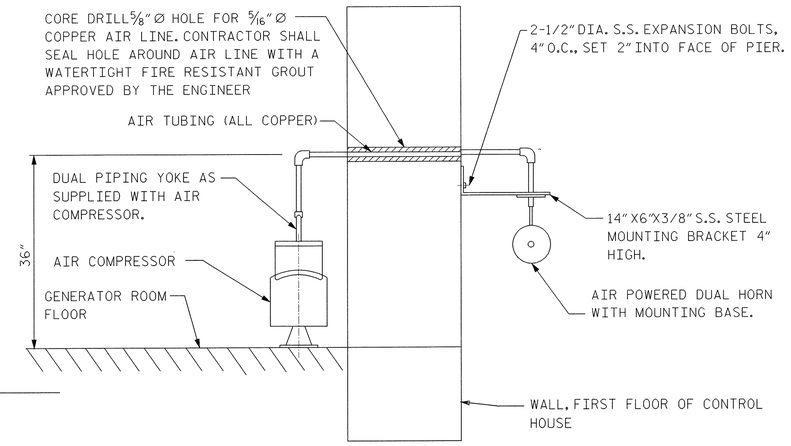

AIR HORN INSTALLATION DETAIL

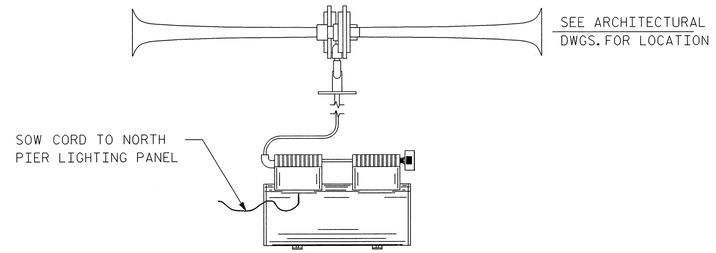

AIR HORN CONFIGURATION

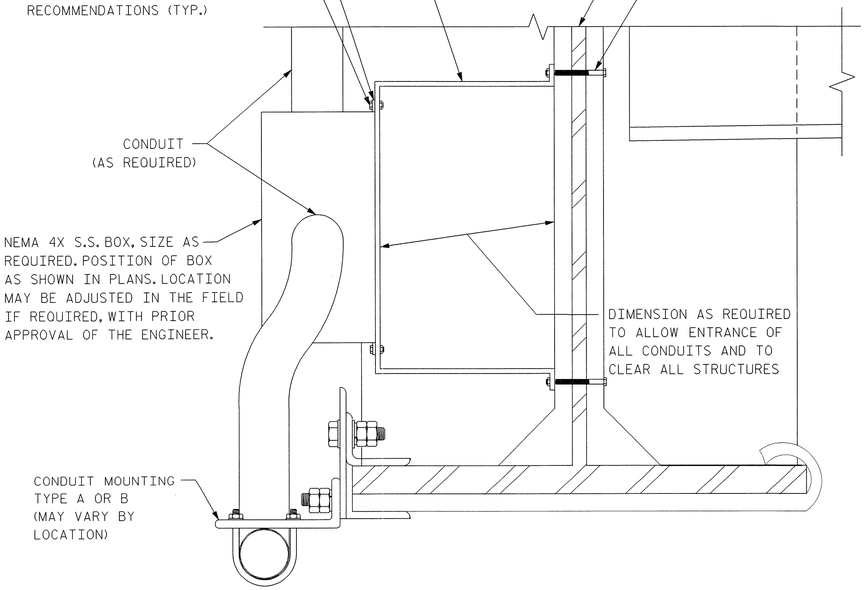

TYPICAL GIRDER MOUNTED BOX INSTALLATION DETAIL

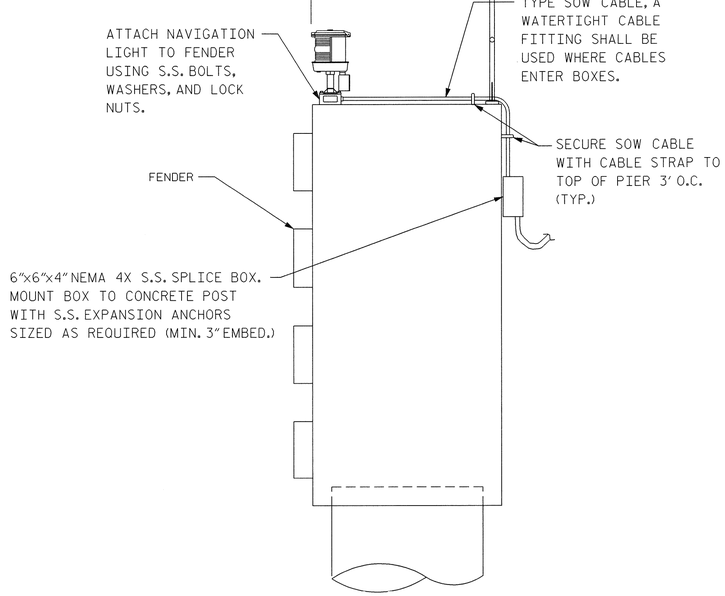

FENDER NAVIGATION LIGHT INSTALLATION DETAIL

NOTES:

1. ONE CABLE SHALL EXTEND TO LIGHT CLOSEST TO PULL BOX ON END OF FENDER AT NAVIGATION LIGHT LOCATION B. A SECOND CABLE SHALL RUN TO A 6"x 6"x 4" NEMA 4X S.S. PULL BOX MOUNTED NEXT TO AXIS LIGHT AT NAVIGATION LIGHT LOCATION C. TYPE SOW CABLES SHALL LEAVE THIS BOX TO POWER THE AXIS LIGHT C, AND REMAINING FENDER LIGHT AT NAVIGATION LIGHT LOCATION B. NO MORE THAN ONE (1) SOW CABLE SHALL RUN ALONG FENDER IN ANY LOCATION.
2. SOW CABLES SHALL BE ATTACHED TO FENDER WITH NYLON SCREW-DOWN CABLE CLAMPS AND S.S. SCREWS, EVERY 3' O.C. MAX.
3. SUFFICIENT SLACK SHALL BE LEFT IN CABLES AT ALL FENDER JOINTS TO ALLOW FOR FENDER MOVEMENT.
4. SOW CABLE SHALL BE ATTACHED TO FENDER SUCH AS TO REDUCE TRIPPING HAZARD. FINAL LOCATION SHALL BE APPROVED BY THE ENGINEER.

PROJECT NO. B-2532

CRAVEN **COUNTY**

STATION: 31+21.29 -L-

NORTH CAROLINA PROFESSIONAL SEAL 031843 ENGINEER GREGORY S. BARON

STATE OF NORTH CAROLINA
DEPARTMENT OF TRANSPORTATION
RALEIGH, NC

NAVIGATION AID DETAILS 2

HNTB HNTB NORTH CAROLINA, P.C.
343 E. Six Forks Rd., Suite 200, Raleigh, N.C. 27609

DRAWN BY FG DATE 10/20/06
CHECKED BY CMC DATE 10/20/06
DWG. NO. E-50

REVISIONS						SHEET NO.
NO.	BY	DATE	NO.	BY	DATE	5-311
1			3			TOTAL SHEETS
2			4			348

Isberman AT FFLD126
10/19/2006 14:42:20
I:\projects\34_Wilmington Files for 100%_submittal\B2532_EL-E50 Nav Aid Det 2.dgn

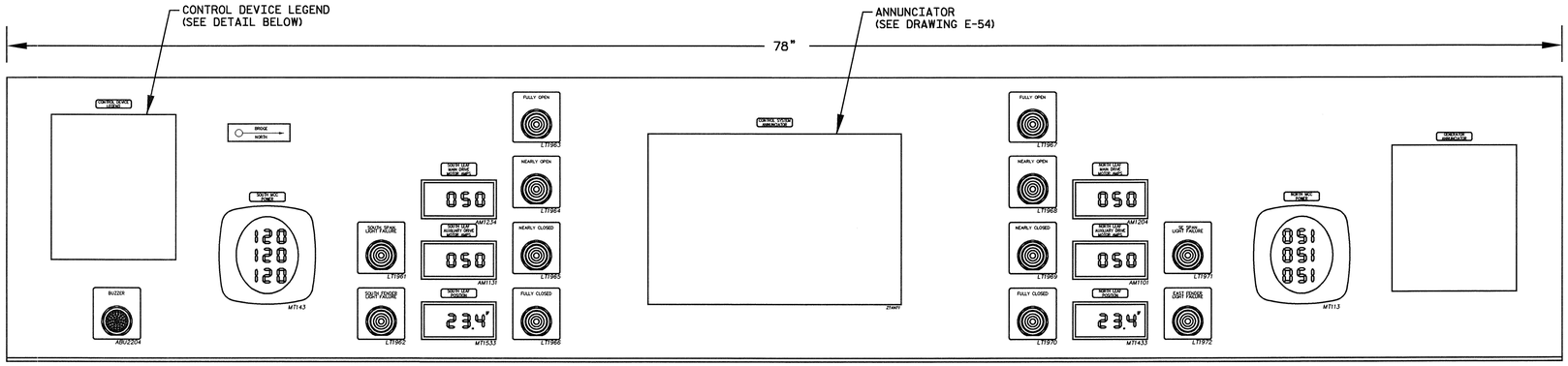

ALARM CONSOLE LAYOUT

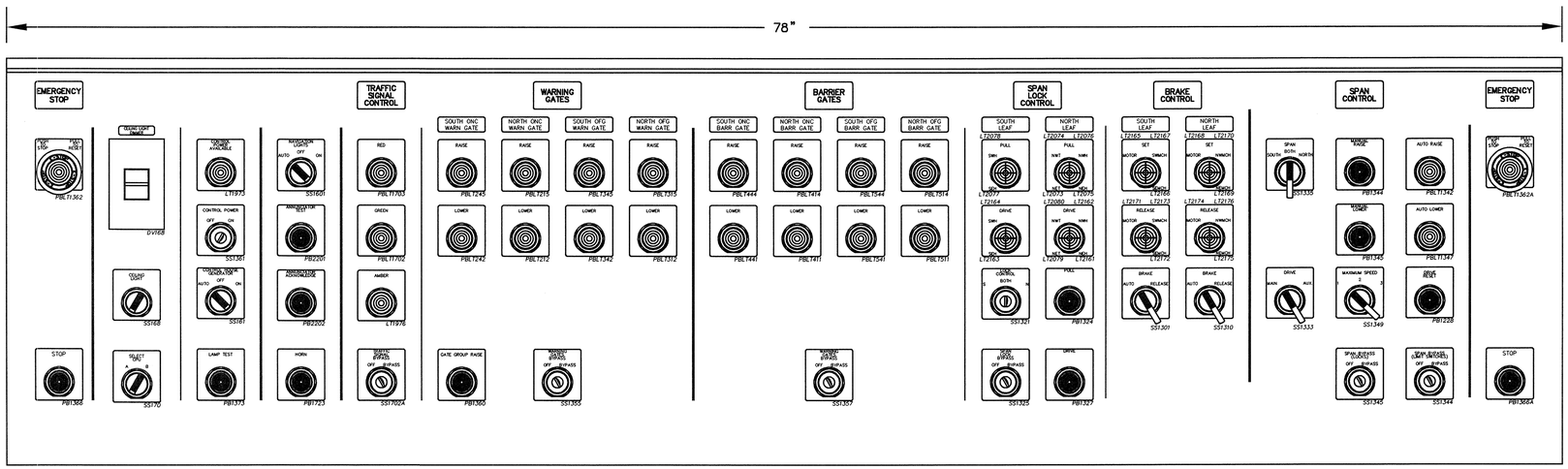

CONTROL CONSOLE LAYOUT

CONTROL DEVICE LEGEND:

AUTO	AUTOMATIC
SWH	SOUTHWEST TAIL LOCK
SEH	SOUTHEAST TAIL LOCK
S	SOUTH
N	NORTH
NWT	NORTHWEST TOE LOCK
NWH	NORTHWEST TAIL LOCK
NET	NORTHEAST TOE LOCK
NEH	NORTHEAST TAIL LOCK
NWMCH	NORTHWEST MACHINERY BRAKE
NEMCH	NORTHEAST MACHINERY BRAKE

NOTES:
ALL CLUSTER PILOT LIGHTS WITH VERTICAL DIVISION ARE STANDARD CLUSTER PILOT LIGHTS INSTALLED $45\frac{33}{64}$ CLOCKWISE FROM NORMAL POSITION.

ALL CONTROL DEVICES ARE CROSS REFERENCED TO THE SCHEMATIC DRAWING AND SCHEMATIC LINE NUMBER ON WHICH THE DEVICE CIRCUIT APPEARS. THE RIGHTMOST TWO DIGITS REFERENCE THE LINE NUMBER WHILE THE DIGIT(S) TO THE LEFT REFERENCE THE SCHEMATIC DRAWING NUMBER.

SEE CONTYROL SCHEMATICS FOR INDICATOR COLORS.

BRIDGE NORTH INDICATOR AND CONTROL DEVICE LEGEND SHALL BE PROVIDED ON LAMINATED NAMEPLATES AS DESCRIBED UNDER NAMEPLATES IN THE ELECTRICAL SPECIAL PROVISIONS.

PROJECT NO. B-2532

CRAVEN COUNTY

STATION: 31+21.29 -L-

NORTH CAROLINA PROFESSIONAL SEAL 031843 ENGINEER GREGORY S. BARON

STATE OF NORTH CAROLINA
DEPARTMENT OF TRANSPORTATION
RALEIGH, NC

CONTROL & ALARM CONSOLE LAYOUT

HNTB HNTB NORTH CAROLINA, P.C.
343 E. Six Forks Rd., Suite 200, Raleigh, N.C. 27609

DRAWN BY FG DATE 10/20/06
CHECKED BY CMC DATE 10/20/06
DWG. NO. E-51

REVISIONS						SHEET NO.
NO.	BY	DATE	NO.	BY	DATE	S-312
1			3			TOTAL SHEETS
2			4			348

Newman, JR FFD1126
10/20/2006 14:40:20
u:\r1426573a\Working Files for 100% submittal\B2532_E_E51 CONTROL_ALARM_CONSOLE_LAYOUT2D.DGN

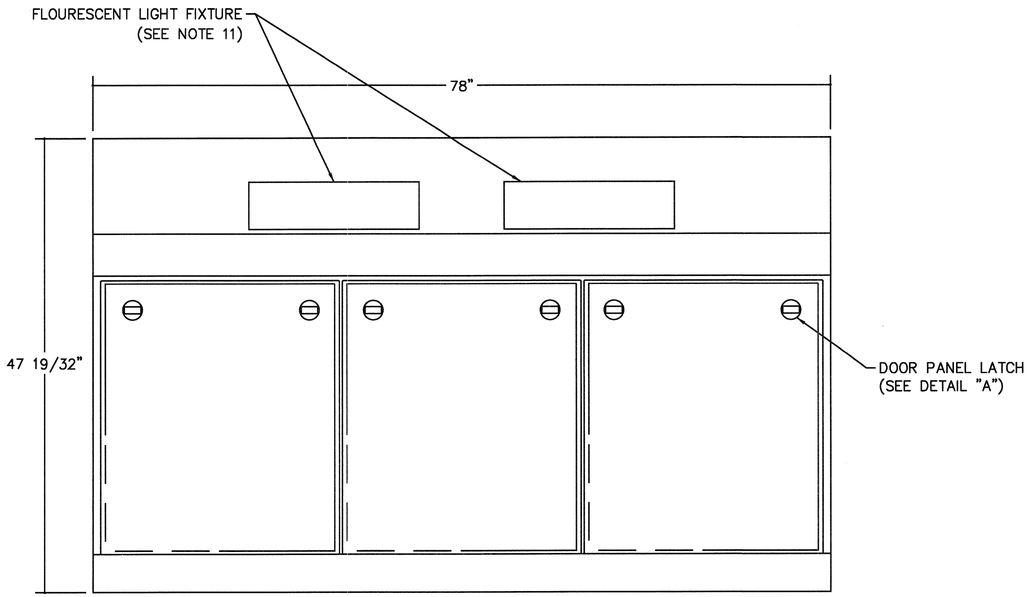

FRONT ELEVATION

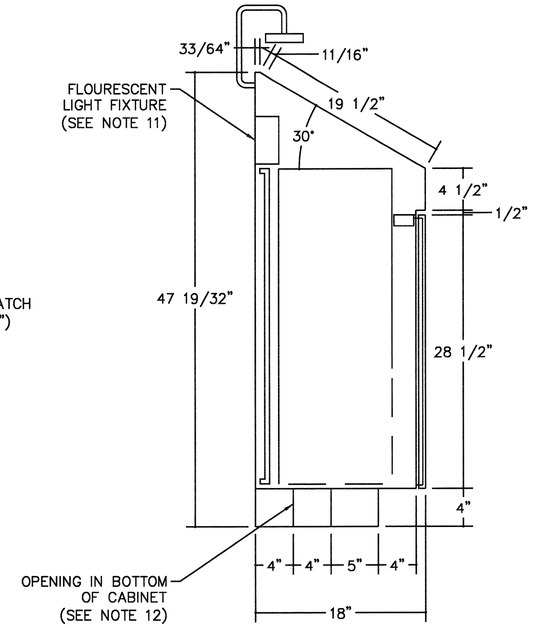

LEFT ELEVATION

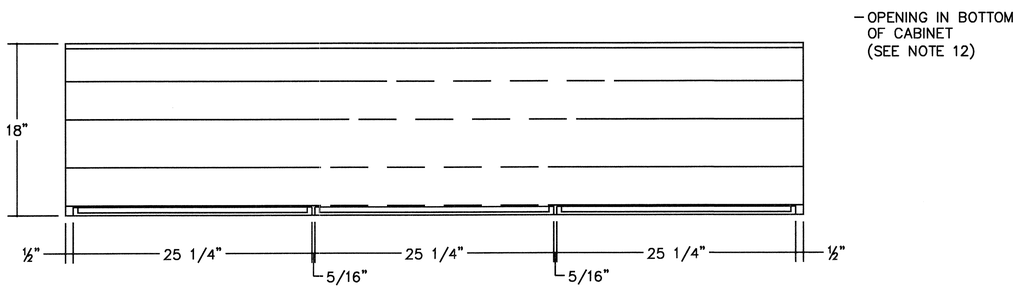

PLAN VIEW

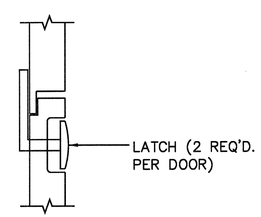

DETAIL "A"

NOTES:

1. FOR CONTROL CONSOLE LAYOUT DETAILS, SEE DRAWING E-51 "CONTROL AND ALARM CONSOLE LAYOUTS".
2. SEE SPECIFICATION FOR DETAILS ON CABINET FINISH AND CONSTRUCTION.
3. CABINET SHALL HAVE NEOPRENE GASKETING AROUND ALL OPENINGS.
4. CABINET SHALL HAVE CONTINUOUS PIANO TYPE HINGE BETWEEN THE DESK TOP PANELS AND BASE.
5. CONSOLE DESK TOP PANELS SHALL HAVE A 1-INCH RETURN LIP ON THE 3 SIDES EXCEPT WHERE HINGED.
6. ALL CORNERS SHALL BE WELDED AND GROUND TO A SMOOTH ROUND FINISH.
7. POCKETS SHALL BE PROVIDED ON THE INSIDE OF THE CABINET DOORS TO HOLD INSTRUCTION MANUALS AND DRAWINGS.
8. DESK TOP SHALL BE HINGED SO THAT IT OPENS UPWARD AND BACKWARD. HARDWARE SHALL BE SUPPLIED TO SAFELY LOCK THE CONSOLE TOP IN THE OPEN POSITION FOR SERVICING. QUARTER TURN LATCHES SHALL BE PROVIDED TO SECURE CONSOLE TOP TO CABINET.
9. ALL CABINET DOORS SHALL HAVE S.S. CONTINUOUS PIANO HINGE WELDED TO THE CABINET.
10. EQUIPMENT TO BE INSTALLED IN THIS CABINET IS NOT SHOWN FOR CLARITY OF CABINET CONSTRUCTION.
11. FLUORESCENT INTERNAL CABINET LIGHTS SHALL BE INSTALLED IN THE TOP PORTION OF THE CABINET. THE LIGHTS SHALL BE ACTIVATED BY A DOOR SWITCH INSTALLED ON EACH DOOR.
12. A 4" WIRE TROUGH SHALL BE INTEGRATED INTO THE BASE OF THE CABINET.
13. PROVIDE A 12" BY 24" OPENING IN THE BOTTOM TO ACCOMODATE WIRING FROM WIREWAY "W1."

PROJECT NO. B-2532

CRAVEN COUNTY

STATION: 31+21.29 -L-

NORTH CAROLINA PROFESSIONAL SEAL 031843 ENGINEER GREGORY S. BARON

STATE OF NORTH CAROLINA
DEPARTMENT OF TRANSPORTATION
RALEIGH, NC

CONTROL CONSOLE DETAILS

HNTB NORTH CAROLINA, P.C.
343 E. Six Forks Rd., Suite 200, Raleigh, N.C. 27609

DRAWN BY MC DATE 9/26/06
CHECKED BY MSW DATE 9/26/06
DWG. NO. E-52

REVISIONS						SHEET NO.
NO.	BY	DATE	NO.	BY	DATE	S-313
1			3			TOTAL SHEETS
2			4			348

fgoltaleya AT FFLD103
03-OCT-2006 14:50
U:\FF4267\Working Files for 100% submittal\B2532_EL_E52 CONTROL CONSOLE DETAILS2D.DGN

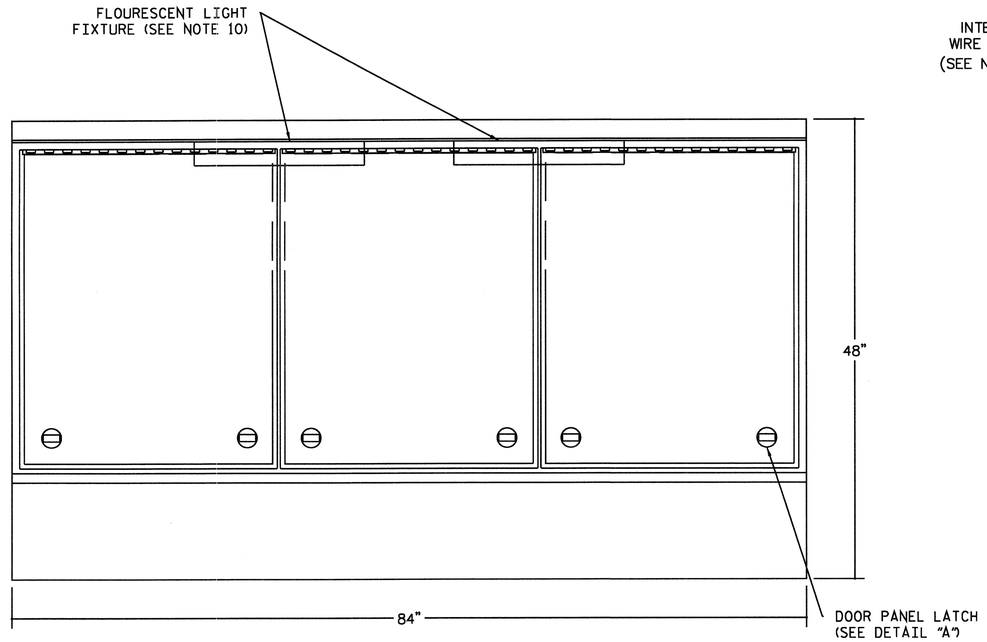

FRONT ELEVATION

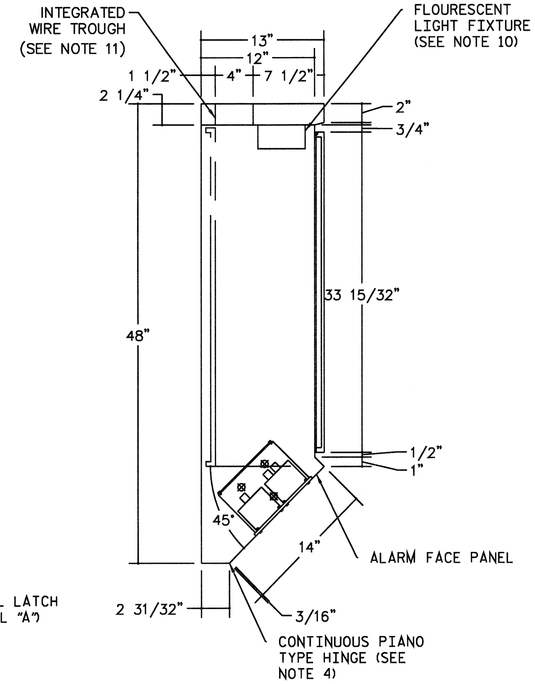

LEFT ELEVATION

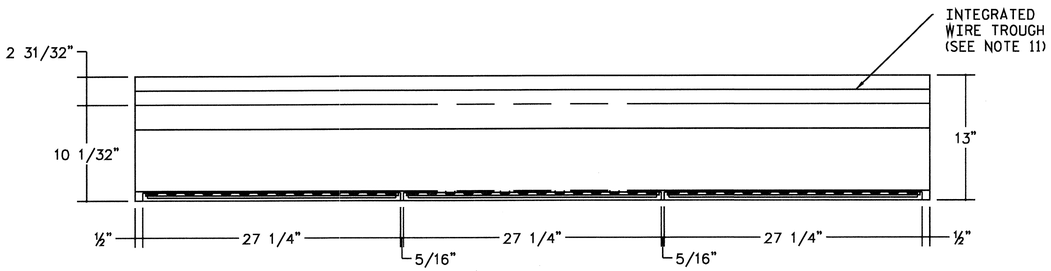

PLAN VIEW

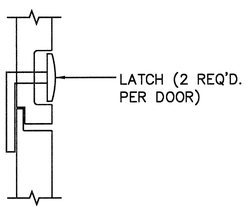

DETAIL "A"

NOTES:

1. FOR ALARM CONSOLE LAYOUT DETAILS, SEE DRAWING E-51 "CONTROL AND ALARM CONSOLE LAYOUTS".
2. SEE SPECIFICATION FOR DETAILS ON CABINET FINISH AND CONSTRUCTION.
3. CABINET SHALL HAVE NEOPRENE GASKETING AROUND ALL OPENINGS.
4. CABINET SHALL HAVE CONTINUOUS PIANO TYPE HINGE AT THE BOTTOM EDGE BETWEEN THE ALARM FACE PANEL AND CABINET SO THAT THE ALARM FACE PANEL OPENS DOWN AND AWAY. HARDWARE SHALL BE SUPPLIED TO SECURELY HOLD THE ALARM FACE PANEL IN A FULLY OPEN POSITION TO ALLOW SUFFICIENT CLEARANCE FOR SERVICING. QUARTER TURN LATCHES SHALL BE PROVIDED TO SECURE CONSOLE TOP TO CABINET.
5. CABINET DOORS SHALL HAVE CONTINUOUS PIANO TYPE HINGE AT THE TOP EDGE OF EACH DOOR SO THEY OPEN FORWARD AND UPWARD. HARDWARE SHALL BE SUPPLIED TO SECURELY HOLD THE DOORS IN A FULLY OPEN POSITION TO ALLOW SUFFICIENT CLEARANCE FOR SERVICING. QUARTER TURN LATCHES SHALL BE PROVIDED TO SECURE CONSOLE TOP TO CABINET.
6. CONSOLE DESK TOP PANELS SHALL HAVE A 1" RETURN LIP ON THE 3 SIDES EXCEPT WHERE HINGED.
7. ALL CORNERS SHALL BE WELDED AND GROUND TO A SMOOTH ROUND FINISH.
8. ALL CABINET DOORS SHALL HAVE CONTINUOUS PIANO HINGE WELDED TO THE CABINET.
9. EQUIPMENT TO BE INSTALLED IN THIS CABINET IS NOT SHOWN FOR CLARITY OF CABINET CONSTRUCTION.
10. FLUORESCENT INTERNAL CABINET LIGHTS SHALL BE INSTALLED IN THE TOP PORTION OF THE CABINET. THE LIGHTS SHALL BE ACTIVATED BY A DOOR SWITCH INSTALLED ON EACH DOOR AND ON ALARM FACE PANEL.
11. A 4" WIRE TROUGH SHALL BE INTEGRATED INTO THE TOP PORTION OF THE CABINET.

PROJECT NO. B-2532

CRAVEN COUNTY

STATION: 31+21.29 -L-

NORTH CAROLINA PROFESSIONAL SEAL 031843 ENGINEER GREGORY S. BARON

STATE OF NORTH CAROLINA
DEPARTMENT OF TRANSPORTATION
RALEIGH, NC

ALARM CONSOLE DETAILS

HNTB NORTH CAROLINA, P.C.
343 E. Six Forks Rd., Suite 200, Raleigh, N.C. 27609

DRAWN BY MC DATE 9/26/06
CHECKED BY MSW DATE 9/26/06
DWG. NO. E-53

REVISIONS						SHEET NO.
NO.	BY	DATE	NO.	BY	DATE	S-314
1			3			TOTAL SHEETS
2			4			348

fgoirtaslaya AT FFLD103
03-OCT-2006 14:54
U:\FF4257\3\e1\Working Files for 100% submittal\B2532_EL_E53 ALARM CONSOLE DETAILS2D.DGN

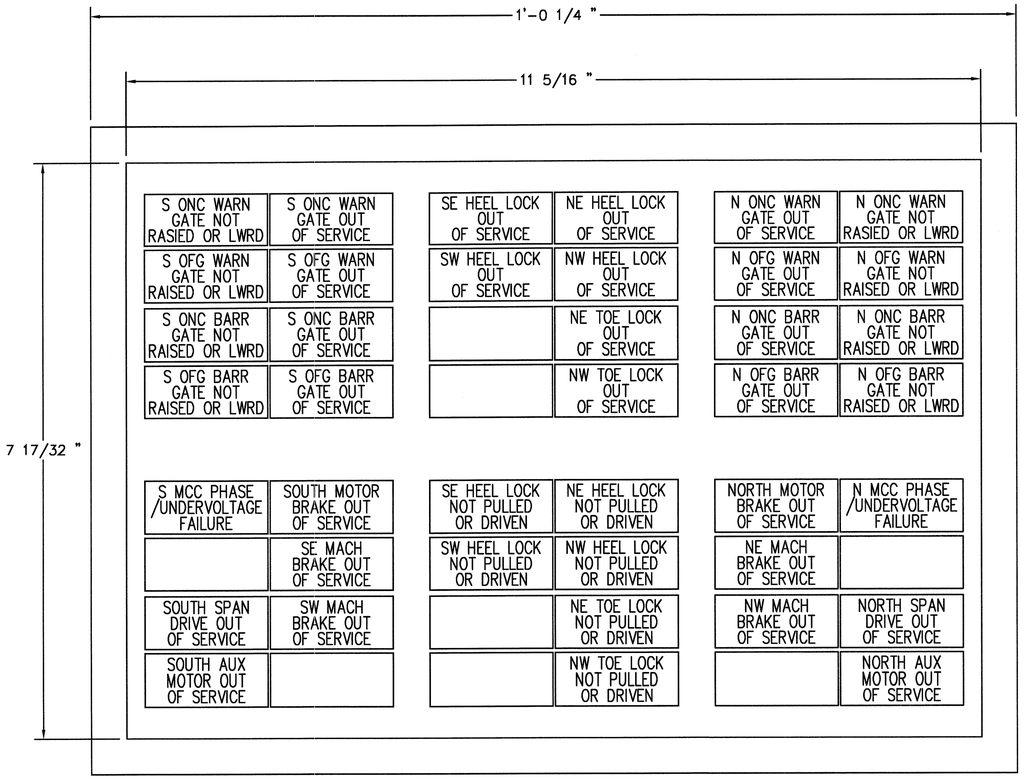

ANNUNCIATOR LAYOUT - DETAIL

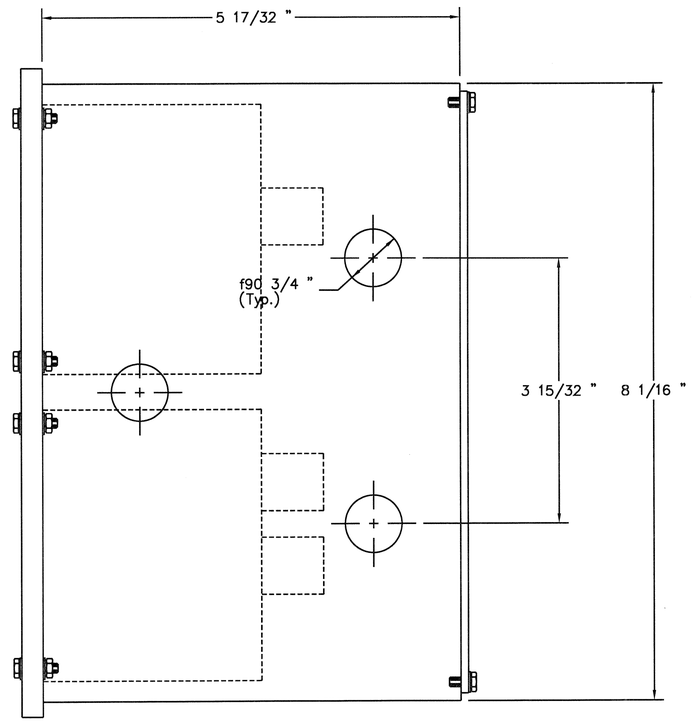

ANNUNCIATOR LAYOUT - SECTION

NOTES:

1. ANNUNCIATOR LAMP CABINET SHALL BE FLUSH MOUNTED, WITH 120 VAC LAMPS. LAMPS MAY BE LINE VOLTAGE OR TRANSFORMER TYPE.
2. WINDOW ENGRAVING SHALL ACCOMMODATE 3 LINES OF 13 CHARACTERS PER LINE. ACTUAL ENGRAVING TEXT SHALL BE AS SHOWN ON THIS DRAWING. WINDOW ARRANGEMENTS SHALL BE AS SHOWN.
3. ONE CABINET SHALL BE FURNISHED COMPLETE WITH LAMPS AND TERMINAL STRIPS.
4. CONNECTIONS TO THE ANNUNCIATOR PANEL SHALL BE AS INDICATED IN THE SCHEMATIC DRAWINGS.
5. STANDBY GENERATOR INDICATORS ARE ACTIVATED VIA RELAY KIT.

PROJECT NO. B-2532

CRAVEN COUNTY

STATION: 31+21.29 -L-

NORTH CAROLINA PROFESSIONAL SEAL 031843 ENGINEER GREGORY S. BARON

STATE OF NORTH CAROLINA
DEPARTMENT OF TRANSPORTATION
RALEIGH, NC

ANNUNCIATOR DETAILS

HNTB NORTH CAROLINA, P.C.
343 E. Six Forks Rd., Suite 200, Raleigh, N.C. 27609

DRAWN BY MC DATE 9/26/06
CHECKED BY MSW DATE 9/26/06
DWG. NO. E-54

REVISIONS						SHEET NO.
NO.	BY	DATE	NO.	BY	DATE	S-315
1			3			TOTAL SHEETS
2			4			348

fgatrlaslaya AT FFLD103
03-OCT-2006 15:16
U:\FF42673\e1\Working Files for 100% submittal\B2532_EL_E54 ANNUNCIATOR DETAILS2D.DGN

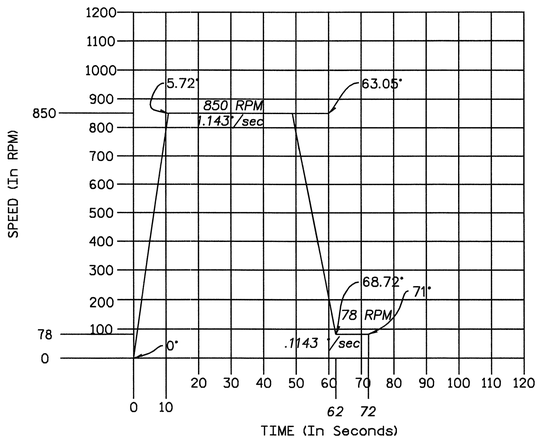

SPEED VS. TIME
OPENING

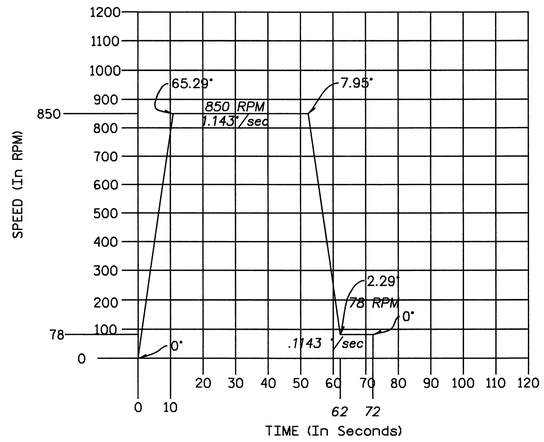

SPEED VS. TIME
CLOSING

MAIN DRIVE
SPEED - TIME CURVES

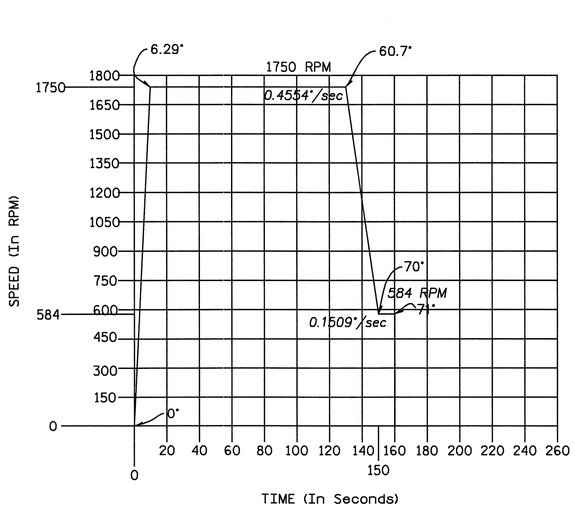

SPEED VS. TIME
OPENING

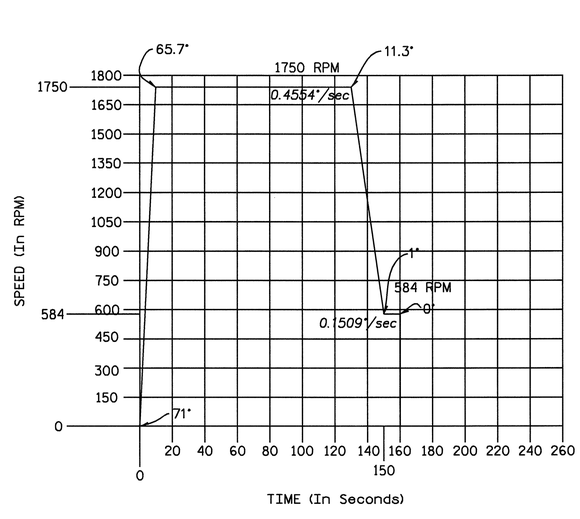

SPEED VS. TIME
CLOSING

Note: 0°=Fully Closed;
71°=Fully Open;

AUXILLIARY DRIVE
SPEED - TIME CURVES

PROJECT NO. B-2532

CRAVEN COUNTY

STATION: 31+21.29 -L-

STATE OF NORTH CAROLINA
DEPARTMENT OF TRANSPORTATION
RALEIGH, NC

SPEED TIME CURVES

NORTH CAROLINA PROFESSIONAL SEAL 031843 ENGINEER GREGORY S. BARON

HNTB HNTB NORTH CAROLINA, P.C.
343 E. Six Forks Rd., Suite 200, Raleigh, N.C. 27609

DRAWN BY MAW DATE 10/20/06
CHECKED BY ALB DATE 10/20/06
DWG. NO. E-55

REVISIONS						SHEET NO.
NO.	BY	DATE	NO.	BY	DATE	S-316
1			3			TOTAL SHEETS
2			4			348

Johnson, KT FIELD126
5/4/2007 8:30:08 AM
uNYdsf3o1e rWorkIng Files for 100% submittal\B2532_EL_E55 SPEED TIME CURVESDGN

PUSHBUTTONS AND SWITCHES

PB501 — PUSHBUTTON, MOMENTARY CONTACT, NORMALLY OPEN

PB502 — PUSHBUTTON, MOMENTARY CONTACT, NORMALLY CLOSED

PBLT503 — ILLUMINATED PUSHBUTTON, MOMENTARY CONTACT, NORMALLY OPEN

PBLT503 (R) — ILLUMINATED PUSHBUTTON, PILOT LIGHT SECTION

PB505 — MUSHROOM HEAD PUSHBUTTON, MOMENTARY CONTACT, NORMALLY CLOSED

SS506 (BYPASS KEYSWITCH) — SELECTOR SWITCH, 2 POSITION

SS507 — SELECTOR SWITCH, 3 POSITION, SPRING RETURN TO CENTER

SS508 / SS508A — SELECTOR SWITCHES WITH MULTIPLE LINKED CONTACTS

LS510 / LS510A — LIMIT SWITCHES, NORMALLY OPEN

LS511 / LS511A — LIMIT SWITCHES, NORMALLY CLOSED

LS512 / LS512A — LIMIT SWITCHES, MULTIPLE LINKED CONTACTS

TAS514 — TEMPERATURE SWITCH

TG515 — DOOR SWITCH

1261 — SELECTOR SWITCHES WITH MULTIPLE LINKED CONTACTS - MAIN CONTACT SHOWN LATER

1263 — SELECTOR SWITCHES WITH MULTIPLE LINKED CONTACTS - MAIN CONTACT SHOWN PREVIOUSLY

WIRING CONNECTIONS

WIRING CONNECTIONS

WIRING CROSSING WITHOUT CONNECTION

584 CBL594 — TERMINAL IN ELECTRICAL CABINETS - DIAGONAL MARKER INDICATES FIELD WIRING REFERENCED TO WIRING TABLES

M570 — NO 567,568,569 NC — EXAMPLE OF CROSS REFERENCING - SEE NOTE 2 FOR FURTHER EXPLANATION.

RELAYS

CR531 — RELAY COIL

CR531 — RELAY CONTACT, NORMALLY OPEN

CR531 — RELAY CONTACT, NORMALLY CLOSED

LR534 (L) — LATCHING RELAY, LATCH FUNCTION

LR534 — LATCHING RELAY CONTACT, NORMALLY OPEN

LR534 — LATCHING RELAY CONTACT, NORMALLY CLOSED

LR537 (U) — LATCHING RELAY, UNLATCH FUNCTION

TD538 (ON DELAY) — TIME DELAY RELAY, ON DELAY OR DELAY AFTER ENERGIZING

TD538 — TIME DELAY RELAY CONTACT, NORMALLY OPEN

TD538 — TIME DELAY RELAY CONTACT, NORMALLY CLOSED

TD541 (OFF DELAY) — TIME DELAY RELAY, OFF DELAY OR DELAY AFTER DE-ENERGIZING

PLC

PLC 1818 — INTERNAL LOGIC "RELAY COIL"

PLC1818 — INTERNAL LOGIC "RELAY CONTACT", NORMALLY OPEN

PLC1818 — INTERNAL LOGIC "RELAY CONTACT", NORMALLY CLOSED

PLCTD538 (ON DELAY) — INTERNAL LOGIC "TIME DELAY RELAY", ON DELAY OR DELAY AFTER ENERGIZING

PLCTD538 — INTERNAL LOGIC "TIME DELAY RELAY CONTACT", NORMALLY OPEN

PLCTD538 — INTERNAL LOGIC "TIME DELAY RELAY CONTACT", NORMALLY CLOSED

PLC1815 — PLC INPUT

PLC1342 — PLC OUTPUT

MOTOR CONTROL

DS561 — IN-SIGHT DISCONNECT SWITCH

CB564 — MOTOR PROTECTION IN MOTOR STARTER

M570 — MOTOR STARTER CONTACTOR CONTACTS WITH OVERLOADS

M570 — CONTACTOR IN MOTOR STARTER OR LIGHTING CONTACTOR

MISCELLANEOUS

577 — CIRCUIT BREAKER

FUSE

579 (R) — PILOT LIGHT, SIGNAL LIGHT OR NAVIGATION LIGHT AS LABELLED - LETTER INSIDE INDICATES LENS COLOR

ABE580 — WARNING GONG

ABU581 — ANNUNCIATOR BUZZER

582 (R) / 583 (G) — DASHED BOX INDICATES LIGHTS WITHIN ARE INTEGRATED INTO A SINGLE UNIT SUCH AS FOR NAVIGATION LIGHTS.

HP — 3-PHASE MOTOR

TRANSFORMER SECONDARY

HEATER — HEATER

OL's — MOTOR OVERLOAD

CT — CURRENT TRANSFORMER

NOTES:

1. ALL COMPONENTS ARE CROSS REFERENCED TO THE SCHEMATIC LINE NUMBER ON WHICH THEY FIRST APPEAR. ALL RELAY OR CONTACTOR CONTACTS ARE REFERENCED TO THEIR COILS. THREE OR FOUR-DIGIT LINE REFERENCE NUMBERS ARE USED. ALL DIGITS WILL INDICATE THE LINE NUMBER WHILE THE THIRD DIGIT FROM THE RIGHT (AND FOURTH, IF PRESENT) ALSO INDICATES THE SCHEMATIC NUMBER. THE LETTERS PRECEDING THE CROSS REFERENCE NUMBERS INDICATE A COMPONENT TYPE AS DESCRIBED IN THE SCHEMATIC LEGEND. FOR EXAMPLE, RELAY CONTACT, CR531 IS A RELAY CONTACT ASSOCIATED WITH THE RELAY COIL FOUND ON LINE 531 FOUND ON SCHEMATIC NUMBER 5.
2. CROSS REFERENCING IS PROVIDED AT EACH RELAY COIL INDICATING THE LINES ON WHICH NORMALLY OPEN AND NORMALLY CLOSED CONTACTS ARE USED. AS DESCRIBED ABOVE, THE CROSS REFERENCE NUMBER INDICATES LINE NUMBER AS WELL AS SCHEMATIC NUMBER.
3. WIRE NUMBERING IN THE SCHEMATICS IS SHOWN ONLY TO FACILITATE TERMINAL NUMBERING. WIRE NUMBERING IS INTENDED NEITHER TO BE COMPLETE NOR TO INFLUENCE THE FINAL WIRE NUMBERING SCHEME AS DEVELOPED BY THE SYSTEM VENDOR.
4. REFER TO THE ELECTRICAL SPECIFICATIONS FOR ADDITIONAL INFORMATION ON COMPONENTS OR CONTROL DEVICES TO BE PROVIDED.

PROJECT NO. B-2532

CRAVEN COUNTY

STATION: 31+21.29 -L-

NORTH CAROLINA PROFESSIONAL SEAL 031843 ENGINEER GREGORY S. BARON

STATE OF NORTH CAROLINA
DEPARTMENT OF TRANSPORTATION
RALEIGH, NC

SCHEMATIC LEGEND

HNTB NORTH CAROLINA, P.C.
343 E. Six Forks Rd., Suite 200, Raleigh, N.C. 27609

DRAWN BY MAW DATE 9-30-2006
CHECKED BY ALB DATE 10-2-2006

DWG. NO. E-56

REVISIONS						SHEET NO.
NO.	BY	DATE	NO.	BY	DATE	S-317
1			3			TOTAL SHEETS
2			4			348

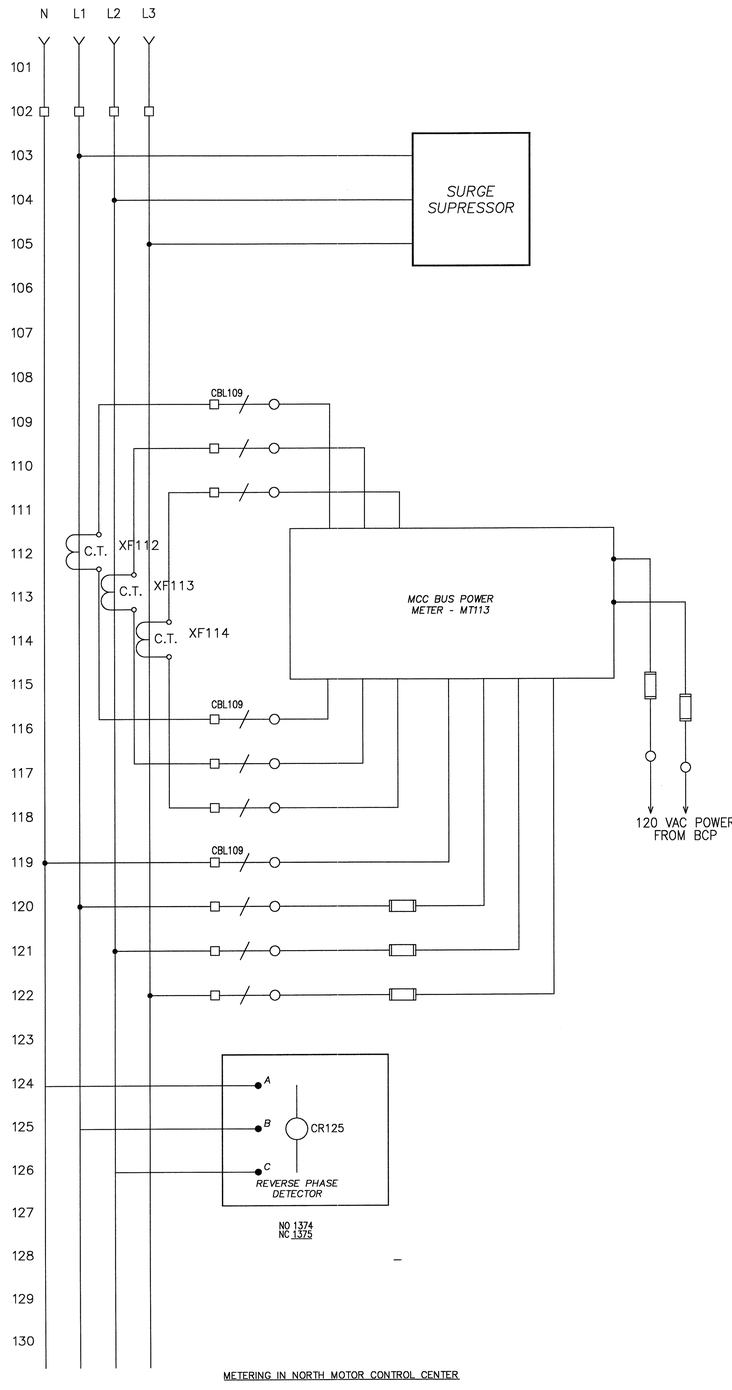

METERING IN NORTH MOTOR CONTROL CENTER

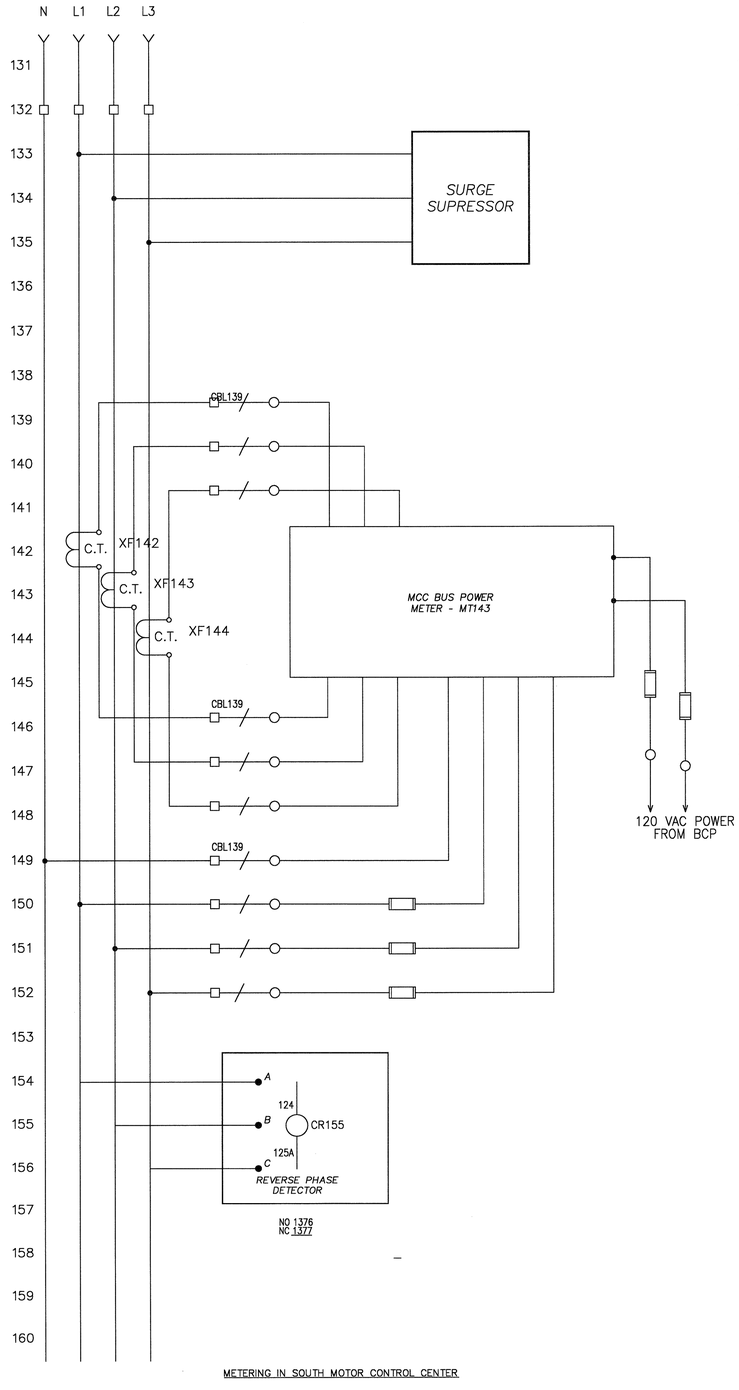

METERING IN SOUTH MOTOR CONTROL CENTER

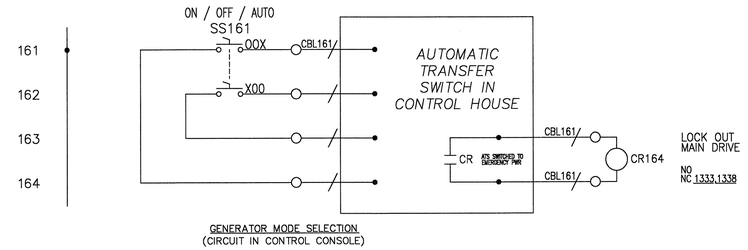

GENERATOR MODE SELECTION
(CIRCUIT IN CONTROL CONSOLE)

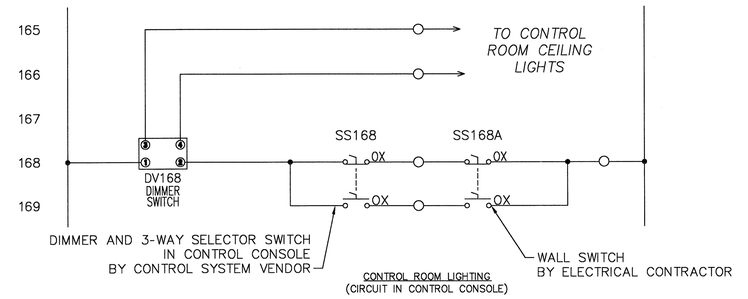

CONTROL ROOM LIGHTING
(CIRCUIT IN CONTROL CONSOLE)

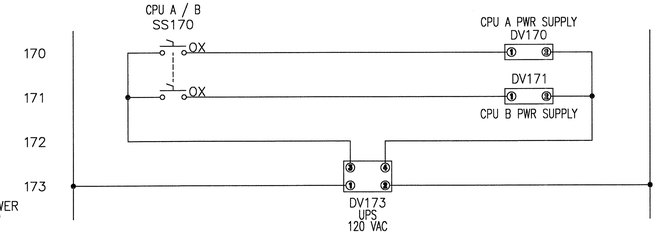

CPU SELECTION
(CIRCUIT IN CONTROL CONSOLE)

PROJECT NO. B-2532

CRAVEN COUNTY

STATION: 31+21.29 -L-

NORTH CAROLINA PROFESSIONAL SEAL 031843 ENGINEER GREGORY S. BARON

STATE OF NORTH CAROLINA
DEPARTMENT OF TRANSPORTATION
RALEIGH, NC

SCHEMATIC NO. 1

HNTB NORTH CAROLINA, P.C.
343 E. Six Forks Rd., Suite 200, Raleigh, N.C. 27609

DRAWN BY MAW DATE 9-30-2006
CHECKED BY ALB DATE 10-2-2006

DWG. NO. E-57

REVISIONS						SHEET NO.
NO.	BY	DATE	NO.	BY	DATE	S-318
1			3			TOTAL SHEETS
2			4			348

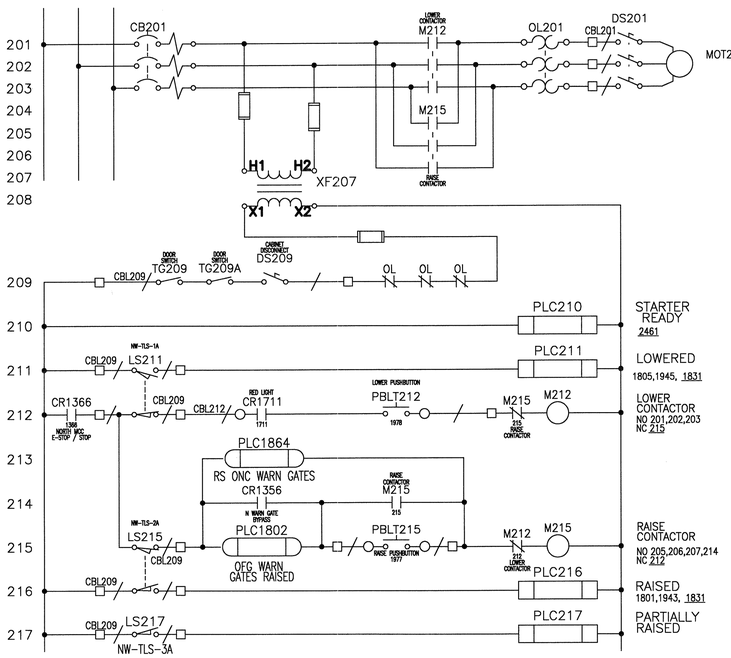

NORTH ONCOMING (NORTHWEST) WARNING GATE
(CIRCUIT IN NORTH MCC)

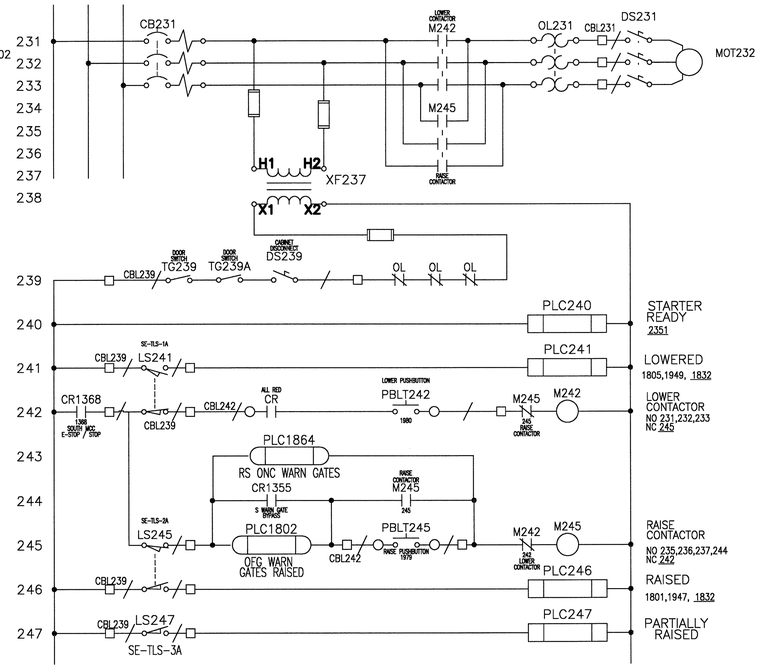

SOUTH ONCOMING (SOUTHEAST) WARNING GATE
(CIRCUIT IN SOUTH MCC)

LIMIT SWITCH CONTACT DEVELOPMENT

CONTACT	LOWERED	GATE POSITION	RAISED	FUNCTION
NW-TLS-1A	■			LOWERED INDICATION
NW-TLS-1B		■	■	LOWER STOP
NW-TLS-2A			■	RAISED INDICATION
NW-TLS-2B	■	■		RAISE STOP
NW-TLS-3A		■	■	PARTIALLY RAISED
NW-TLS-3B	■	■		FLASHER

NORTH ONCOMING (NORTHWEST) GATE CAM LIMIT SWITCH

LIMIT SWITCH CONTACT DEVELOPMENT

CONTACT	LOWERED	GATE POSITION	RAISED	FUNCTION
SE-TLS-1A	■			LOWERED INDICATION
SE-TLS-1B		■	■	LOWER STOP
SE-TLS-2A			■	RAISED INDICATION
SE-TLS-2B	■	■		RAISE STOP
SE-TLS-3A		■	■	PARTIALLY RAISED
SE-TLS-3B	■	■		FLASHER

SOUTH ONCOMING (SOUTHEAST) WARNING GATE CAM LIMIT SWITCH

NOTE:
HEAVY LINE DENOTES AREA OF SWITCH TRAVEL DURING WHICH CONTACT IS CLOSED.

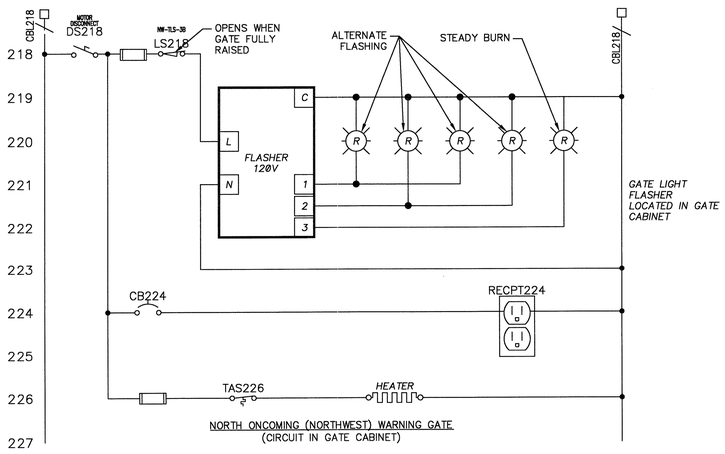

NORTH ONCOMING (NORTHWEST) WARNING GATE
(CIRCUIT IN GATE CABINET)

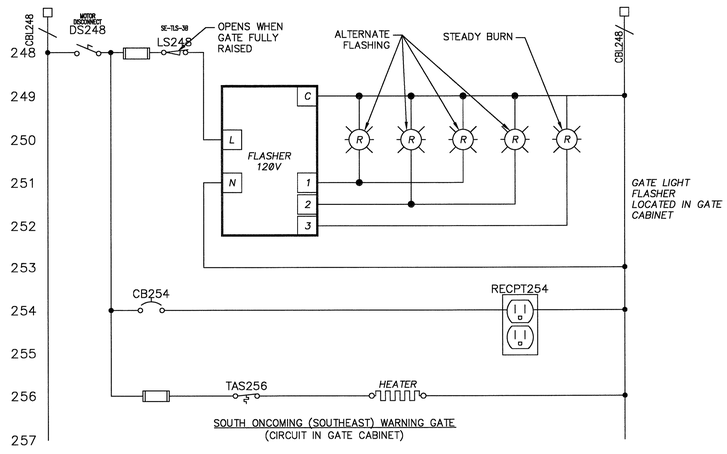

SOUTH ONCOMING (SOUTHEAST) WARNING GATE
(CIRCUIT IN GATE CABINET)

PROJECT NO. B-2532

CRAVEN COUNTY

STATION: 31+21.29 -L-

NORTH CAROLINA PROFESSIONAL SEAL 031843 ENGINEER GREGORY S. BARON

STATE OF NORTH CAROLINA
DEPARTMENT OF TRANSPORTATION
RALEIGH, NC

SCHEMATIC NO. 2

HNTB NORTH CAROLINA, P.C.
343 E. Six Forks Rd., Suite 200, Raleigh, N.C. 27609

DRAWN BY MAW DATE 9-30-2006
CHECKED BY ALB DATE 10-2-2006
DWG. NO. E-58

REVISIONS						SHEET NO.
NO.	BY	DATE	NO.	BY	DATE	S-319
1			3			TOTAL SHEETS
2			4			348

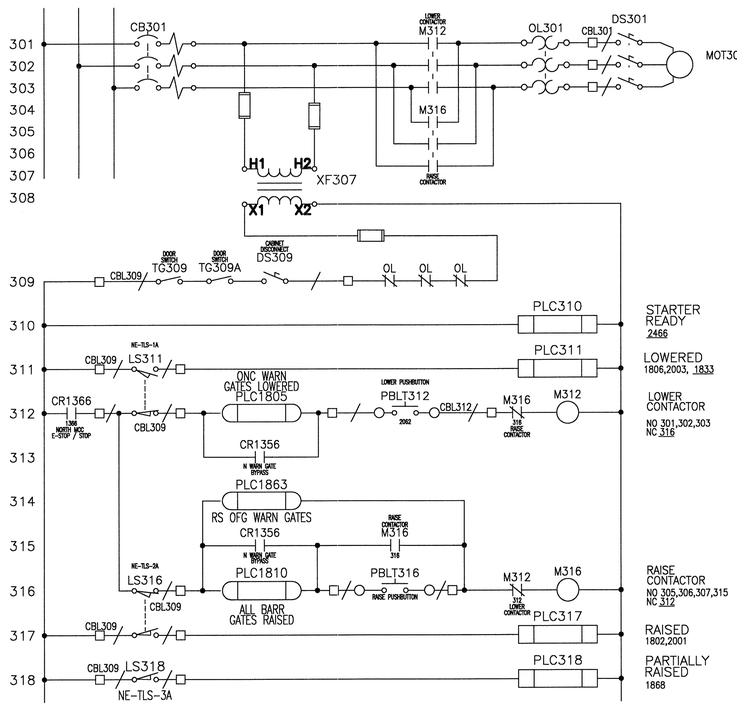

NORTH OFFGOING (NORTHEAST) WARNING GATE
(CIRCUIT IN NORTH MCC)

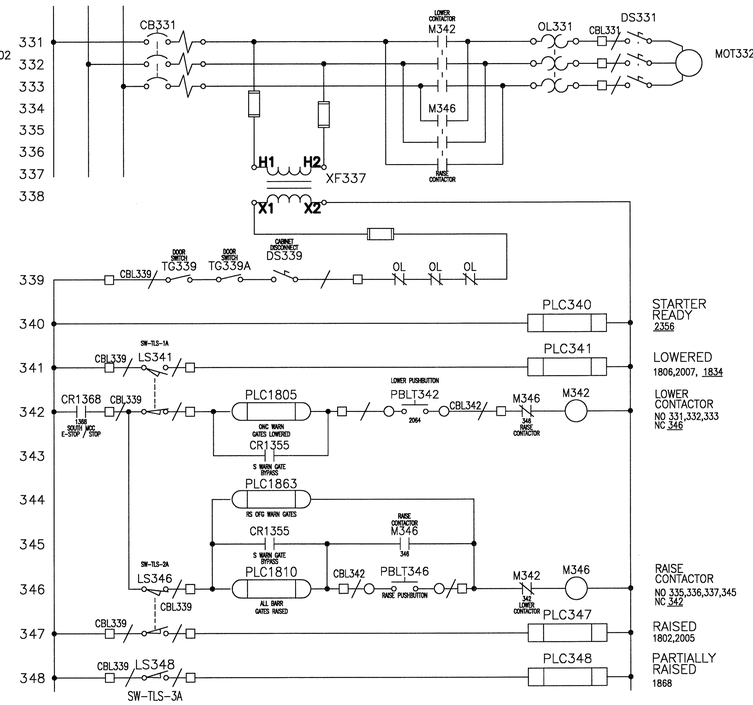

SOUTH OFFGOING (SOUTHWEST) WARNING GATE
(CIRCUIT IN SOUTH MCC)

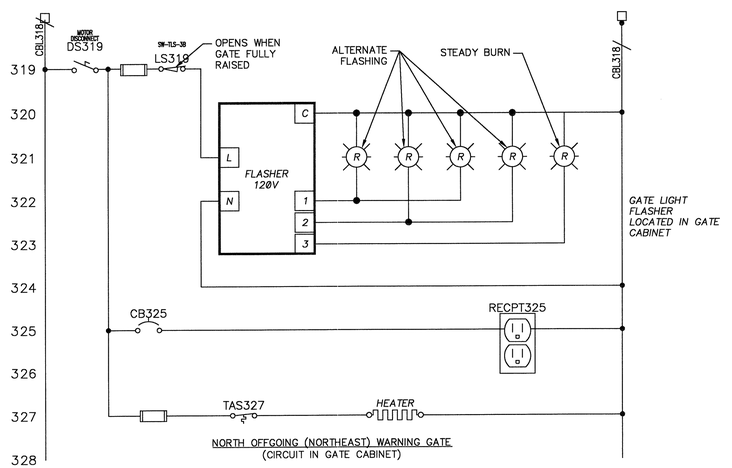

NORTH OFFGOING (NORTHEAST) WARNING GATE
(CIRCUIT IN GATE CABINET)

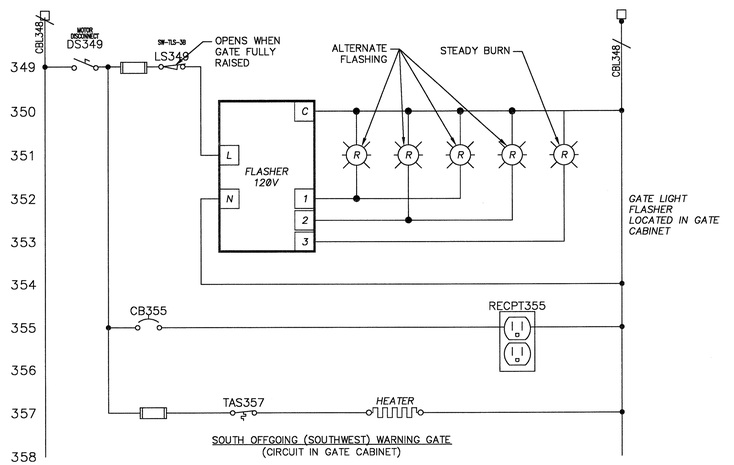

SOUTH OFFGOING (SOUTHWEST) WARNING GATE
(CIRCUIT IN GATE CABINET)

LIMIT SWITCH CONTACT DEVELOPMENT

CONTACT	LOWERED	GATE POSITION	RAISED	FUNCTION
NE-TLS-1A	■			LOWERED INDICATION
NE-TLS-1B		■	■	LOWER STOP
NE-TLS-2A			■	RAISED INDICATION
NE-TLS-2B	■	■		RAISE STOP
NE-TLS-3A		■	■	PARTIALLY RAISED
NE-TLS-3B	■	■		FLASHER

NORTH OFFGOING (NORTHEAST) GATE CAM LIMIT SWITCH

LIMIT SWITCH CONTACT DEVELOPMENT

CONTACT	LOWERED	GATE POSITION	RAISED	FUNCTION
SW-TLS-1A	■			LOWERED INDICATION
SW-TLS-1B		■	■	LOWER STOP
SW-TLS-2A			■	RAISED INDICATION
SW-TLS-2B	■	■		RAISE STOP
SW-TLS-3A		■	■	PARTIALLY RAISED
SW-TLS-3B	■	■		FLASHER

SOUTH OFFGOING (SOUTHWEST) WARNING GATE CAM LIMIT SWITCH

NOTE:
HEAVY LINE DENOTES AREA OF SWITCH TRAVEL DURING WHICH CONTACT IS CLOSED.

PROJECT NO. B-2532

CRAVEN COUNTY

STATION: 31+21.29 -L-

NORTH CAROLINA PROFESSIONAL SEAL 031843 ENGINEER GREGORY S. BARON

STATE OF NORTH CAROLINA
DEPARTMENT OF TRANSPORTATION
RALEIGH, NC

SCHEMATIC NO. 3

HNTB NORTH CAROLINA, P.C.
343 E. Six Forks Rd., Suite 200, Raleigh, N.C. 27609

DRAWN BY MAW DATE 9-30-2006
CHECKED BY ALB DATE 10-2-2006
DWG. NO. E-59

REVISIONS						SHEET NO.
NO.	BY	DATE	NO.	BY	DATE	S-320
1			3			TOTAL SHEETS
2			4			348

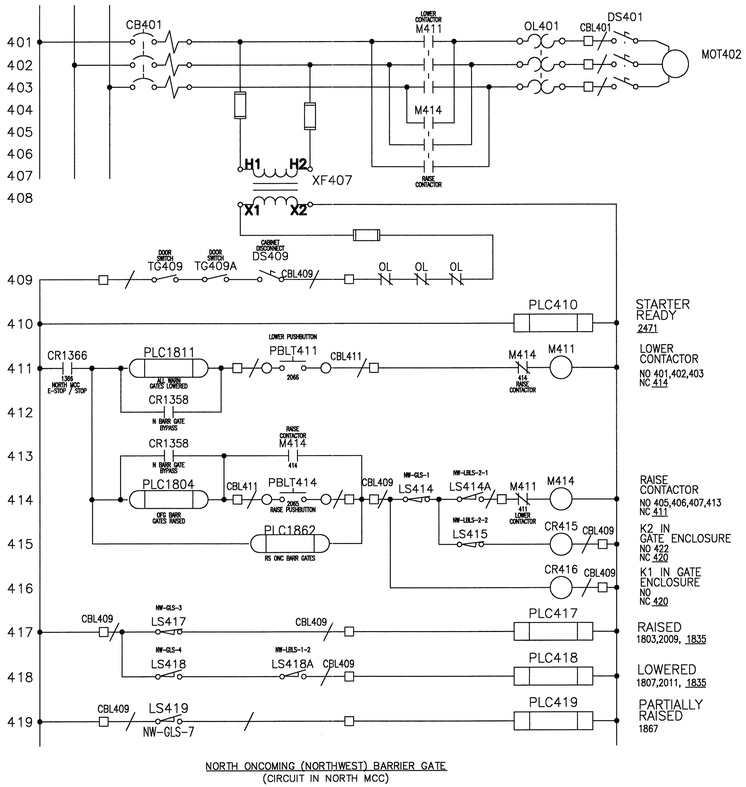

NORTH ONCOMING (NORTHWEST) BARRIER GATE
(CIRCUIT IN NORTH MCC)

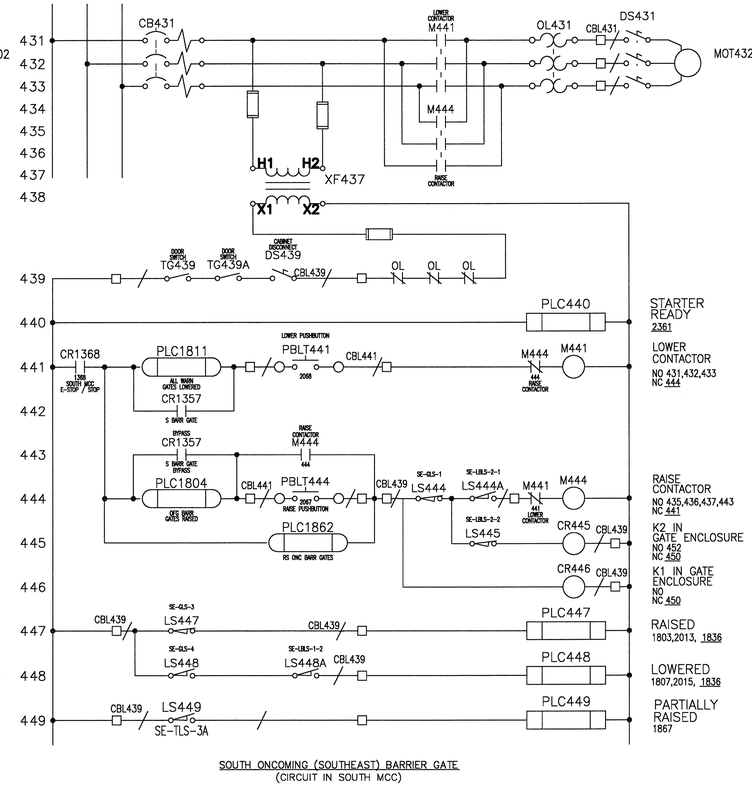

SOUTH ONCOMING (SOUTHEAST) BARRIER GATE
(CIRCUIT IN SOUTH MCC)

LIMIT SWITCH CONTACT DEVELOPMENT

CONTACT	LOWERED	GATE POSITION	RAISED	
*-GLS-1	■	■		RAISE STOP
*-GLS-2		■	■	LOWER STOP
*-GLS-3			■	RAISED INDICATION
*-GLS-4	■			LOWERED INDICATION
*-GLS-5	■			LOCK PERMISSIVE
*-GLS-6	■	■	■	FLASHER
*-GLS-7		■	■	PARTIALLY RAISED
*-GLS-8	■			SPARE

*
SE
NW SOUTH / NORTH ONCOMING (SOUTHEAST / NORTHWEST) BARRIER GATE LIMIT SWITCH

LIMIT SWITCH CONTACT DEVELOPMENT

CONTACT	LOCKED	LOCK BAR POSITION	UNLOCKED	FUNCTION
*-LBLS-1-1		■	■	LOCK STOP
*-LBLS-1-2	■			LOCK INDICATION
*-LBLS-2-1	■	■		UNLOCK STOP
*-LBLS-2-2			■	OPEN PERMISSIVE

*
SE
NW SOUTH / NORTH ONCOMING (SOUTHEAST / NORTHWEST) BARRIER GATE LIMIT SWITCH

NOTE:
HEAVY LINE DENOTES AREA OF SWITCH TRAVEL DURING WHICH CONTACT IS CLOSED.

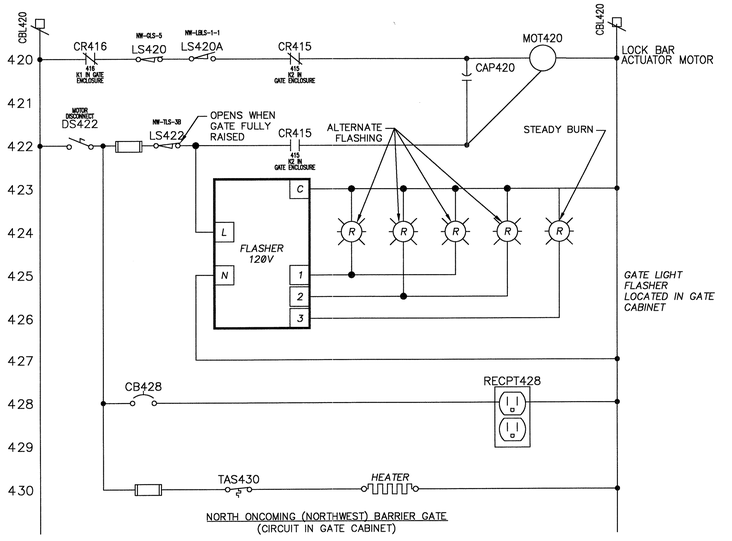

NORTH ONCOMING (NORTHWEST) BARRIER GATE
(CIRCUIT IN GATE CABINET)

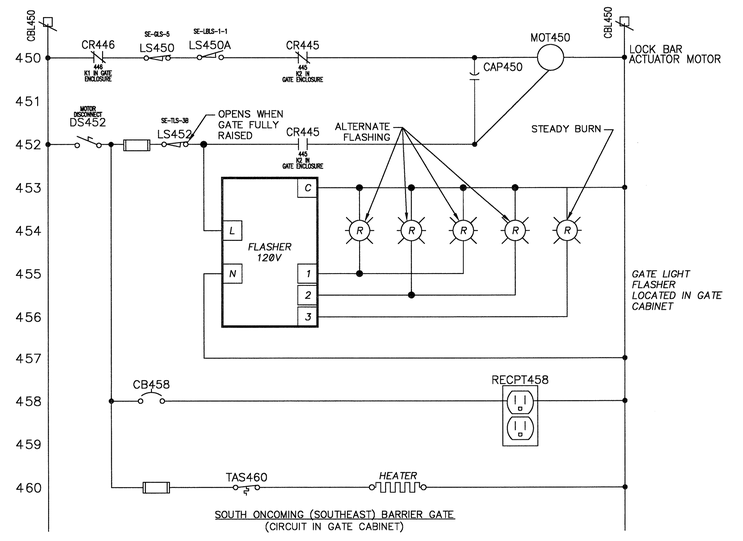

SOUTH ONCOMING (SOUTHEAST) BARRIER GATE
(CIRCUIT IN GATE CABINET)

PROJECT NO. B-2532

CRAVEN COUNTY

STATION: 31+21.29 -L-

STATE OF NORTH CAROLINA
DEPARTMENT OF TRANSPORTATION
RALEIGH, NC

SCHEMATIC NO. 4

HNTB NORTH CAROLINA, P.C.
343 E. Six Forks Rd., Suite 200, Raleigh, N.C. 27609

DRAWN BY MAW DATE 9-30-2006
CHECKED BY ALB DATE 10-2-2006
DWG. NO. E-60

REVISIONS						SHEET NO.
NO.	BY	DATE	NO.	BY	DATE	S-321
1			3			TOTAL SHEETS
2			4			348

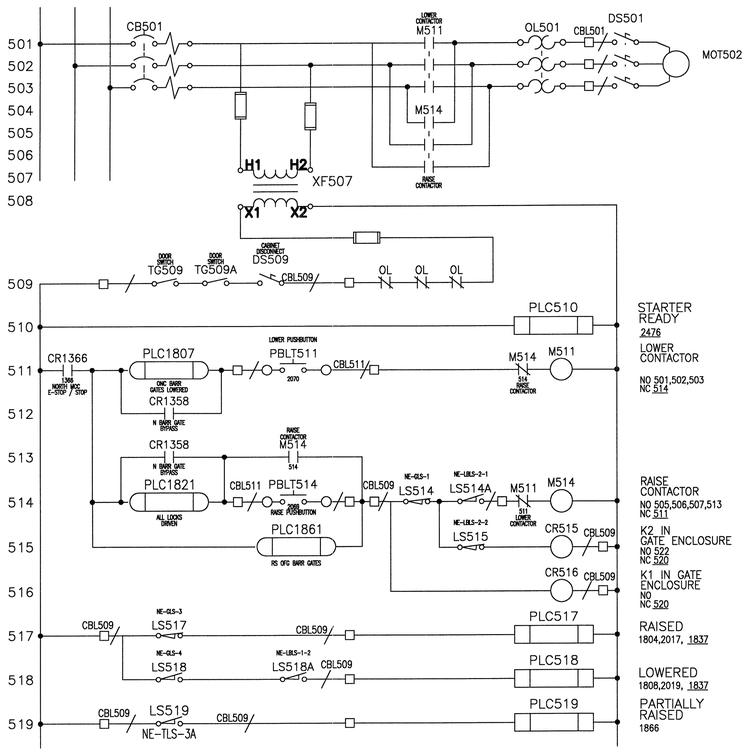

NORTH OFFGOING (NORTHEAST) BARRIER GATE
(CIRCUIT IN NORTH MCC)

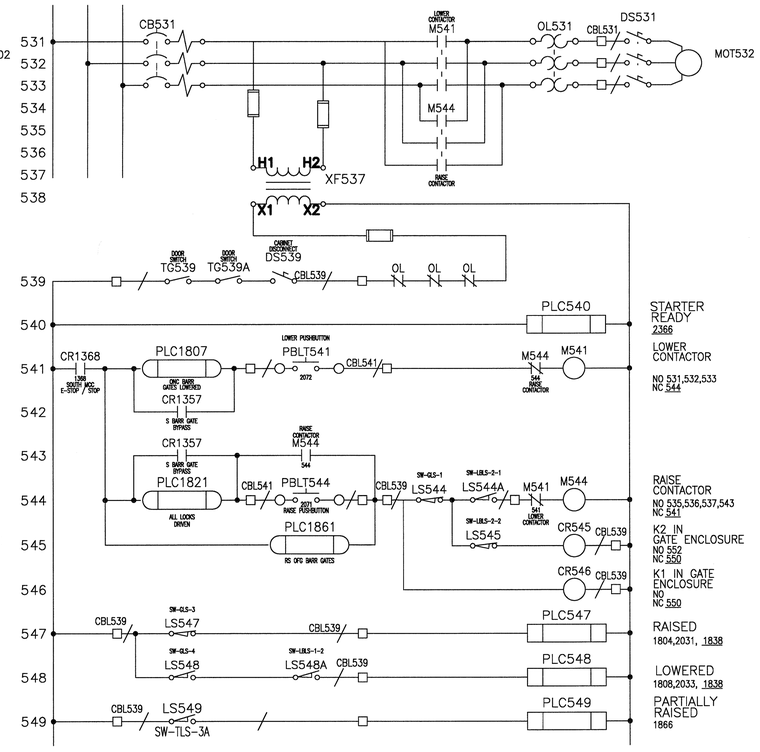

SOUTH OFFGOING (SOUTHWEST) BARRIER GATE
(CIRCUIT IN SOUTH MCC)

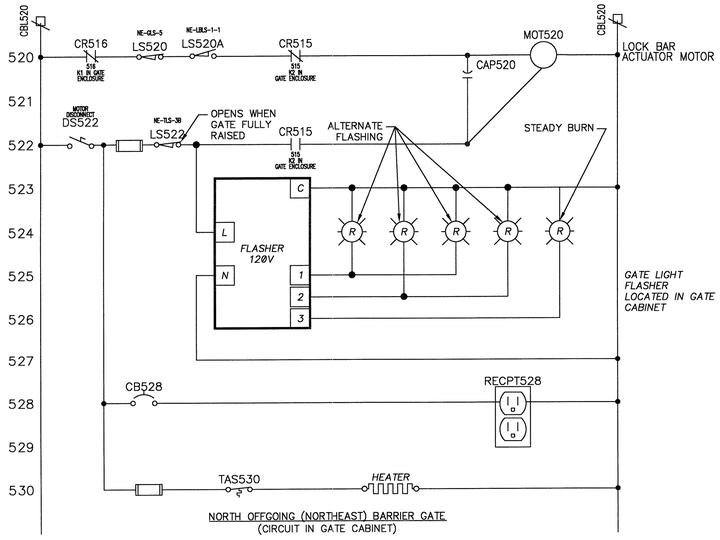

NORTH OFFGOING (NORTHEAST) BARRIER GATE
(CIRCUIT IN GATE CABINET)

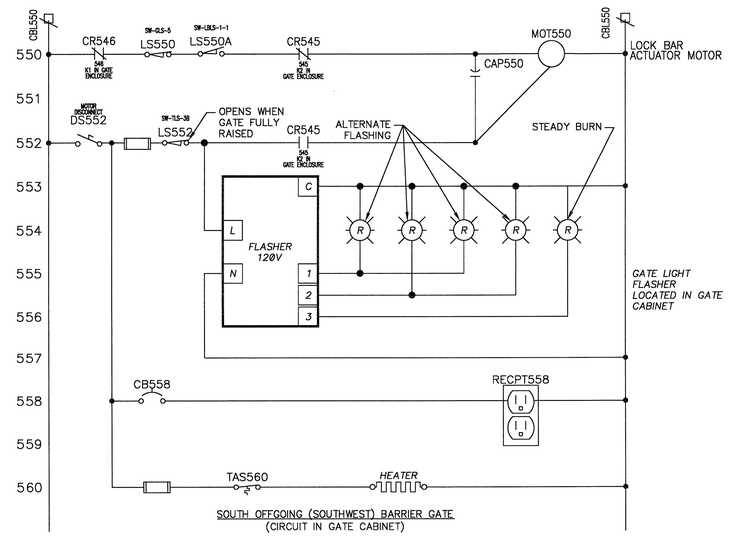

SOUTH OFFGOING (SOUTHWEST) BARRIER GATE
(CIRCUIT IN GATE CABINET)

LIMIT SWITCH CONTACT DEVELOPMENT

CONTACT	LOWERED	GATE POSITION	RAISED	
*-GLS-1				RAISE STOP
*-GLS-2				LOWER STOP
*-GLS-3				RAISED INDICATION
*-GLS-4				LOWERED INDICATION
*-GLS-5				LOCK PERMISSIVE
*-GLS-6				FLASHER
*-GLS-7				PARTIALLY RAISED
*-GLS-8				SPARE

* NE SW NORTH / SOUTH OFFGOING (NORTHEAST / SOUTHWEST) BARRIER GATE LIMIT SWITCH

LIMIT SWITCH CONTACT DEVELOPMENT

CONTACT	LOCKED	LOCK BAR POSITION	UNLOCKED	FUNCTION
*-LBLS-1-1				LOCK STOP
*-LBLS-1-2				LOCK INDICATION
*-LBLS-2-1				UNLOCK STOP
*-LBLS-2-2				OPEN PERMISSIVE

* NE SW NORTH / SOUTH OFFGOING (NORTHEAST / SOUTHWEST) BARRIER GATE LIMIT SWITCH

NOTE:
HEAVY LINE DENOTES AREA OF SWITCH TRAVEL DURING WHICH CONTACT IS CLOSED.

PROJECT NO. B-2532

CRAVEN COUNTY

STATION: 31+21.29 -L-

NORTH CAROLINA PROFESSIONAL ENGINEER SEAL 031843 GREGORY S. BARON

STATE OF NORTH CAROLINA
DEPARTMENT OF TRANSPORTATION
RALEIGH, NC

SCHEMATIC NO. 5

HNTB HNTB NORTH CAROLINA, P.C.
343 E. Six Forks Rd., Suite 200, Raleigh, N.C. 27609

DRAWN BY MAW DATE 9-30-2006
CHECKED BY ALB DATE 10-2-2006
DWG. NO. E-61

REVISIONS						SHEET NO.
NO.	BY	DATE	NO.	BY	DATE	S-322
1			3			TOTAL SHEETS
2			4			348

LIMIT SWITCH CONTACT DEVELOPMENT

CONTACT	PULLED	OPERATOR POSITION	DRIVEN	FUNCTION
NETPLS-1-1A	■			PULLED INDICATION
NETPLS-1-1B		■	■	PULL STOP
NETPLS-1-2A				SPARE
NETPLS-1-2B				SPARE

NORTHEAST TOE LOCK PULLED LIMIT SWITCH

LIMIT SWITCH CONTACT DEVELOPMENT

CONTACT	PULLED	OPERATOR POSITION	DRIVEN	FUNCTION
NETDLS-1-1A			■	DRIVEN INDICATION
NETDLS-1-1B	■	■		DRIVEN STOP
NETDLS-1-2A				SPARE
NETDLS-1-2B				SPARE

NORTHEAST TOE LOCK DRIVEN LIMIT SWITCH

LIMIT SWITCH CONTACT DEVELOPMENT

CONTACT	PULLED	OPERATOR POSITION	DRIVEN	FUNCTION
NWTPLS-2-1A	■			PULLED INDICATION
NWTPLS-2-1B		■	■	PULL STOP
NWTPLS-2-2A				SPARE
NWTPLS-2-2B				SPARE

NORTHWEST TOE LOCK PULLED LIMIT SWITCH

LIMIT SWITCH CONTACT DEVELOPMENT

CONTACT	PULLED	OPERATOR POSITION	DRIVEN	FUNCTION
NWTDLS-2-1A			■	DRIVEN INDICATION
NWTDLS-2-1B	■	■		DRIVEN STOP
NWTDLS-2-2A				SPARE
NWTDLS-2-2B				SPARE

NORTHWEST TOE LOCK DRIVEN LIMIT SWITCH

NOTE:
HEAVY LINE DENOTES AREA OF SWITCH TRAVEL DURING WHICH CONTACT IS CLOSED.

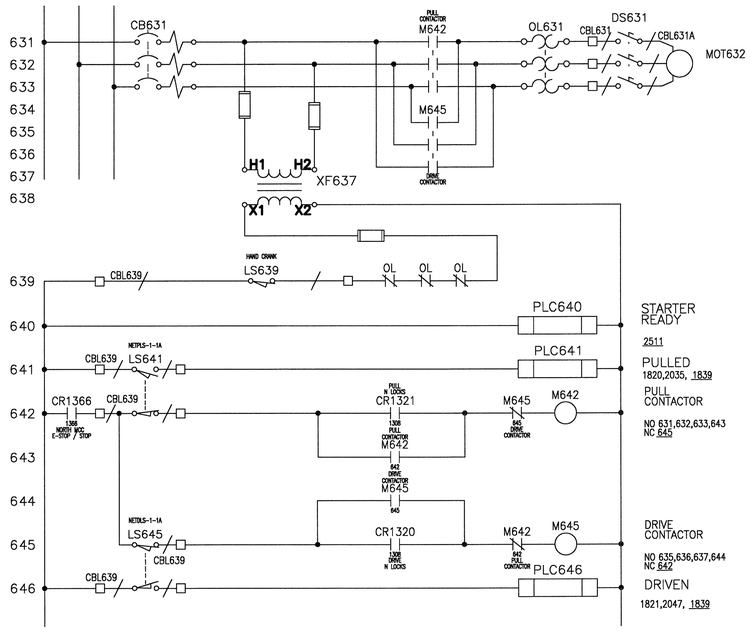

NORTHEAST TOE LOCK CIRCUIT
(CIRCUIT IN NORTH MCC)

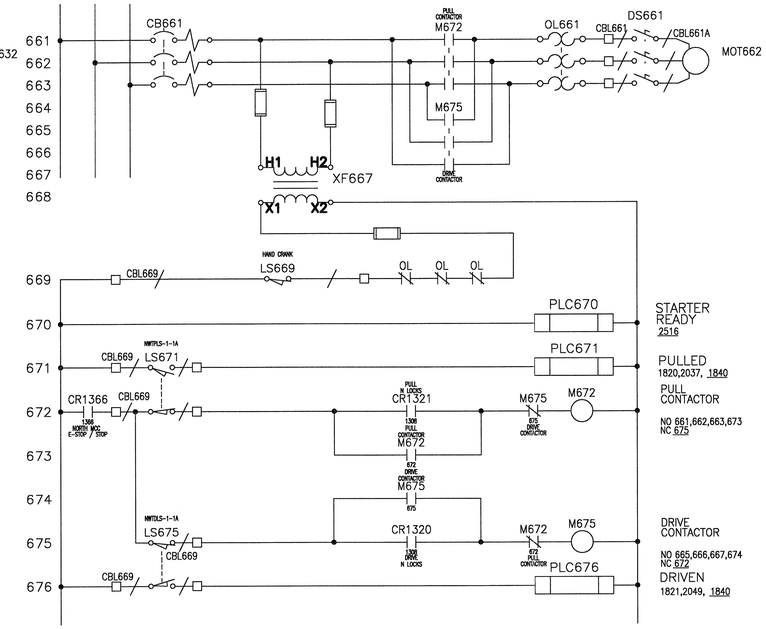

NORTHWEST TOE LOCK CIRCUIT
(CIRCUIT IN SOUTH MCC)

PROJECT NO. B-2532

CRAVEN COUNTY

STATION: 31+21.29 -L-

NORTH CAROLINA PROFESSIONAL SEAL 031843 ENGINEER GREGORY S. BARON

STATE OF NORTH CAROLINA
DEPARTMENT OF TRANSPORTATION
RALEIGH, NC

SCHEMATIC NO. 6

HNTB HNTB NORTH CAROLINA, P.C.
343 E. Six Forks Rd., Suite 200, Raleigh, N.C. 27609

DRAWN BY MAW DATE 9-30-2006
CHECKED BY ALB DATE 10-2-2006
DWG. NO. E-62

REVISIONS						SHEET NO.
NO.	BY	DATE	NO.	BY	DATE	S-323
1			3			TOTAL SHEETS
2			4			346

LIMIT SWITCH CONTACT DEVELOPMENT

CONTACT	PULLED	OPERATOR POSITION	DRIVEN	FUNCTION
NEHPLS-1-1A	■			PULLED INDICATION
NEHPLS-1-1B		■	■	PULL STOP
NEHPLS-1-2A				SPARE
NEHPLS-1-2B				SPARE

NORTHEAST HEEL LOCK PULLED LIMIT SWITCH

LIMIT SWITCH CONTACT DEVELOPMENT

CONTACT	PULLED	OPERATOR POSITION	DRIVEN	FUNCTION
NEHDLS-1-1A			■	DRIVEN INDICATION
NEHDLS-1-1B	■	■		DRIVEN STOP
NEHDLS-1-2A				SPARE
NEHDLS-1-2B				SPARE

NORTHEAST HEEL LOCK DRIVEN LIMIT SWITCH

LIMIT SWITCH CONTACT DEVELOPMENT

CONTACT	PULLED	OPERATOR POSITION	DRIVEN	FUNCTION
NWHPLS-2-1A	■			PULLED INDICATION
NWHPLS-2-1B		■	■	PULL STOP
NWHPLS-2-2A				SPARE
NWHPLS-2-2B				SPARE

NORTHWEST HEEL LOCK PULLED LIMIT SWITCH

LIMIT SWITCH CONTACT DEVELOPMENT

CONTACT	PULLED	OPERATOR POSITION	DRIVEN	FUNCTION
NWHDLS-2-1A			■	DRIVEN INDICATION
NWHDLS-2-1B	■	■		DRIVEN STOP
NWHDLS-2-2A				SPARE
NWHDLS-2-2B				SPARE

NORTHWEST HEEL LOCK DRIVEN LIMIT SWITCH

NOTE:
HEAVY LINE DENOTES AREA OF SWITCH TRAVEL DURING WHICH CONTACT IS CLOSED.

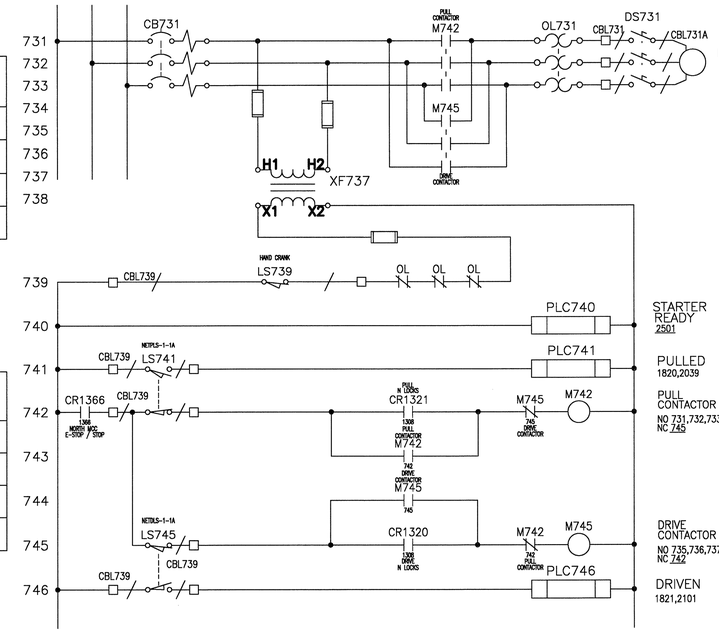

NORTHEAST HEEL LOCK CIRCUIT
(CIRCUIT IN NORTH MCC)

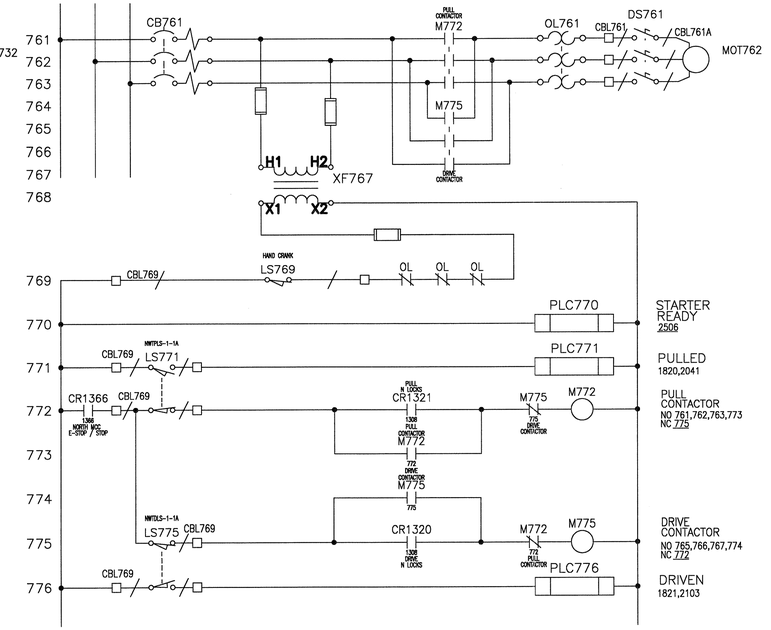

NORTHWEST HEEL LOCK CIRCUIT
(CIRCUIT IN NORTH MCC)

PROJECT NO. B-2532

CRAVEN COUNTY

STATION: 31+21.29 -L-

NORTH CAROLINA PROFESSIONAL SEAL 031843 ENGINEER GREGORY S. BARON

STATE OF NORTH CAROLINA
DEPARTMENT OF TRANSPORTATION
RALEIGH, NC

SCHEMATIC NO. 7

HNTB HNTB NORTH CAROLINA, P.C.
343 E. Six Forks Rd., Suite 200, Raleigh, N.C. 27609

DRAWN BY MAW DATE 9-30-2006
CHECKED BY ALB DATE 10-2-2006
DWG. NO. E-63

REVISIONS						SHEET NO.
NO.	BY	DATE	NO.	BY	DATE	S-3249
1			3			TOTAL SHEETS
2			4			348

LIMIT SWITCH CONTACT DEVELOPMENT

CONTACT	PULLED	OPERATOR POSITION	DRIVEN	FUNCTION
SEHPLS-1-1A	■			PULLED INDICATION
SEHPLS-1-1B		■		PULL STOP
SEHPLS-1-2A				SPARE
SEHPLS-1-2B				SPARE

SOUTHEAST HEEL LOCK PULLED LIMIT SWITCH

LIMIT SWITCH CONTACT DEVELOPMENT

CONTACT	PULLED	OPERATOR POSITION	DRIVEN	FUNCTION
SEHDLS-1-1A			■	DRIVEN INDICATION
SEHDLS-1-1B		■		DRIVEN STOP
SEHDLS-1-2A				SPARE
SEHDLS-1-2B				SPARE

SOUTHEAST HEEL LOCK DRIVEN LIMIT SWITCH

LIMIT SWITCH CONTACT DEVELOPMENT

CONTACT	PULLED	OPERATOR POSITION	DRIVEN	FUNCTION
SWHPLS-2-1A	■			PULLED INDICATION
SWHPLS-2-1B		■		PULL STOP
SWHPLS-2-2A				SPARE
SWHPLS-2-2B				SPARE

SOUTHWEST HEEL LOCK PULLED LIMIT SWITCH

LIMIT SWITCH CONTACT DEVELOPMENT

CONTACT	PULLED	OPERATOR POSITION	DRIVEN	FUNCTION
SWHDLS-2-1A			■	DRIVEN INDICATION
SWHDLS-2-1B		■		DRIVEN STOP
SWHDLS-2-2A				SPARE
SWHDLS-2-2B				SPARE

SOUTHWEST HEEL LOCK DRIVEN LIMIT SWITCH

NOTE:
HEAVY LINE DENOTES AREA OF SWITCH TRAVEL DURING WHICH CONTACT IS CLOSED.

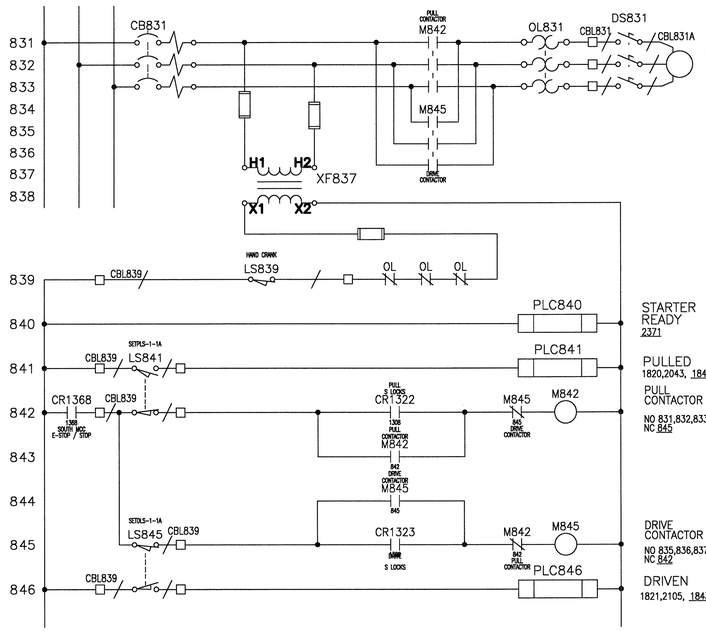

SOUTHEAST HEEL LOCK CIRCUIT
(CIRCUIT IN SOUTH MCC)

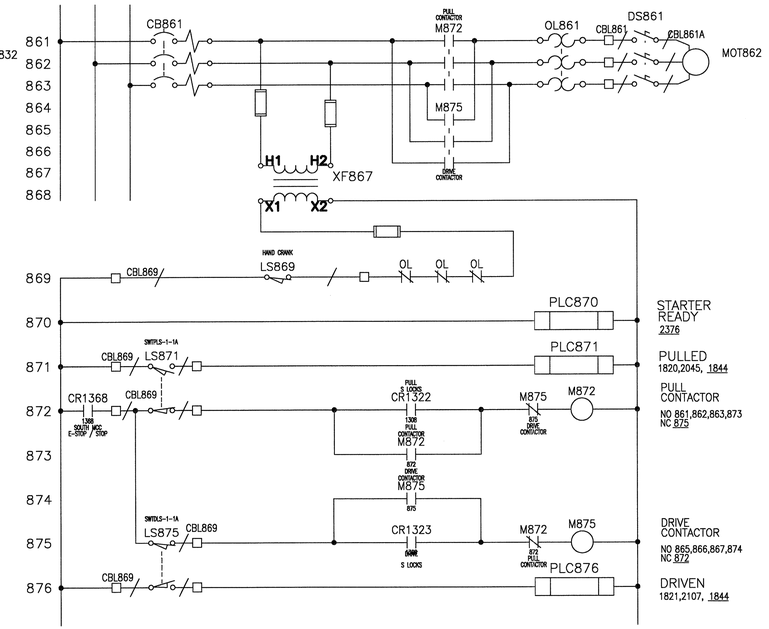

SOUTHWEST HEEL LOCK CIRCUIT
(CIRCUIT IN SOUTH MCC)

PROJECT NO. B-2532

CRAVEN COUNTY

STATION: 31+21.29 -L-

NORTH CAROLINA PROFESSIONAL SEAL 031843 ENGINEER GREGORY S. BARON

STATE OF NORTH CAROLINA
DEPARTMENT OF TRANSPORTATION
RALEIGH, NC

SCHEMATIC NO. 8

HNTB NORTH CAROLINA, P.C.
343 E. Six Forks Rd., Suite 200, Raleigh, N.C. 27609

DRAWN BY MAW DATE 9-30-2006
CHECKED BY ALB DATE 10-2-2006
DWG. NO. E-64

REVISIONS						SHEET NO.
NO.	BY	DATE	NO.	BY	DATE	S-325
1			3			TOTAL SHEETS
2			4			348

LIMIT SWITCH CONTACT DEVELOPMENT

CONTACT	SET	BRAKE POSITION	RELEASED	FUNCTION
*-MRLS-1A			■	RELEASED INDICATION AND CONTROL
*-MRLS-1B	■	■		(UNUSED)
*-MRLS-2A				(SPARE)
*-MRLS-2B				(SPARE)

SET / RELEASED

*
NM - MOTOR BRAKE
NE - NE MACH BRAKE
NW - NW MACH BRAKE

BRAKE MANUAL RELEASE LIMIT SWITCH

LIMIT SWITCH CONTACT DEVELOPMENT

CONTACT	SET	BRAKE POSITION	RELEASED	FUNCTION
*-SLS-1A	■			SET INDICATION AND CONTROL
*-SLS-1B		■	■	(UNUSED)
*-SLS-2A				(SPARE)
*-SLS-2B				(SPARE)

SET / RELEASED

*
NM - MOTOR BRAKE
NE - NE MACH BRAKE
NW - NW MACH BRAKE

BRAKE SET LIMIT SWITCH

LIMIT SWITCH CONTACT DEVELOPMENT

CONTACT	SET	BRAKE POSITION	RELEASED	FUNCTION
*-RLS-1A			■	RELEASED INDICATION AND CONTROL
*-RLS-1B	■	■		(UNUSED)
*-RLS-2A				(SPARE)
*-RLS-2B				(SPARE)

SET / RELEASED

*
NM - MOTOR BRAKE
NE - NE MACH BRAKE
NW - NW MACH BRAKE

BRAKE RELEASED LIMIT SWITCH

NOTE:
HEAVY LINE DENOTES AREA OF SWITCH TRAVEL DURING WHICH CONTACT IS CLOSED.

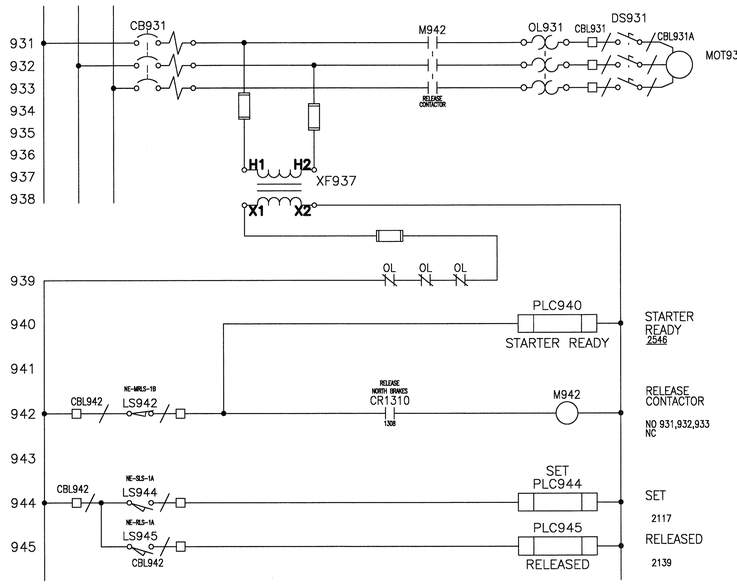

NORTHEAST MACHINERY BRAKE
(CIRCUIT IN nORTH MCC)

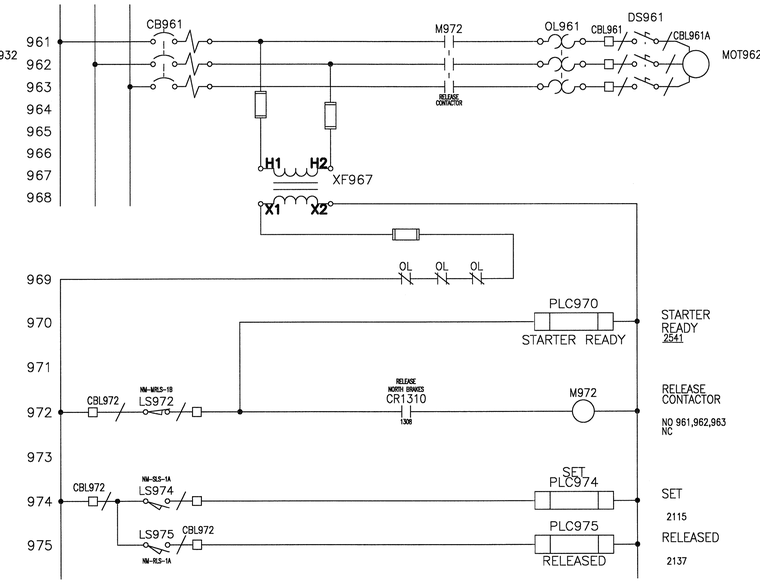

NORTH MOTOR BRAKE
(CIRCUIT IN NORTH MCC)

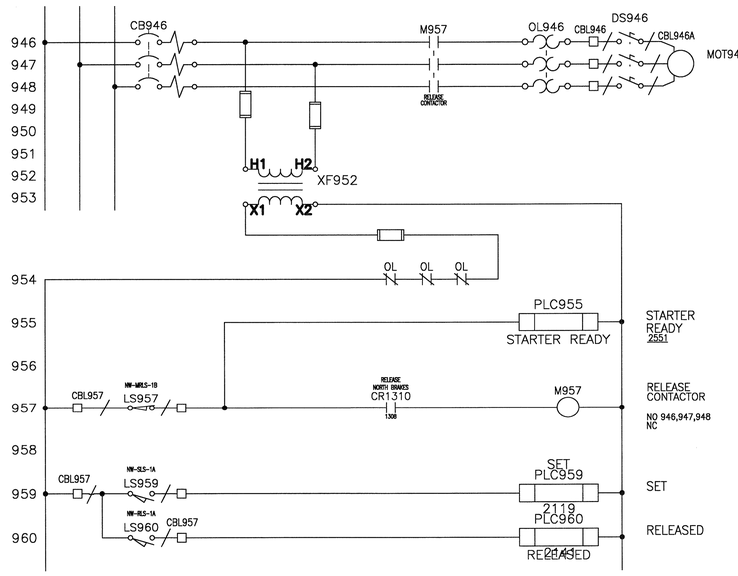

NORTHWEST MACHINERY BRAKE
(CIRCUIT IN NORTH MCC)

PROJECT NO. B-2532
CRAVEN COUNTY
STATION: 31+21.29 -L-

NORTH CAROLINA PROFESSIONAL SEAL 031843 ENGINEER GREGORY S. BARON

STATE OF NORTH CAROLINA
DEPARTMENT OF TRANSPORTATION
RALEIGH, NC

SCHEMATIC NO. 9

HNTB
HNTB NORTH CAROLINA, P.C.
343 E. Six Forks Rd., Suite 200, Raleigh, N.C. 27609

DRAWN BY MAW DATE 9-30-2006
CHECKED BY ALB DATE 10-2-2006
DWG. NO. E-65

REVISIONS						SHEET NO.
NO.	BY	DATE	NO.	BY	DATE	S-326
1			3			TOTAL SHEETS
2			4			348

LIMIT SWITCH CONTACT DEVELOPMENT

CONTACT	SET	BRAKE POSITION	RELEASED	FUNCTION
*-MRLS-1A			■	RELEASED INDICATION AND CONTROL
*-MRLS-1B	■	■		(UNUSED)
*-MRLS-2A				(SPARE)
*-MRLS-2B				(SPARE)

SET / RELEASED

*
SM - S MOTOR BRAKE
SE - NE MACH BRAKE
SW - NW MACH BRAKE

BRAKE MANUAL RELEASE LIMIT SWITCH

LIMIT SWITCH CONTACT DEVELOPMENT

CONTACT	SET	BRAKE POSITION	RELEASED	FUNCTION
*-SLS-1A	■			SET INDICATION AND CONTROL
*-SLS-1B		■		(UNUSED)
*-SLS-2A				(SPARE)
*-SLS-2B				(SPARE)

SET / RELEASED

*
SM - S MOTOR BRAKE
SE - NE MACH BRAKE
SW - NW MACH BRAKE

BRAKE SET LIMIT SWITCH

LIMIT SWITCH CONTACT DEVELOPMENT

CONTACT	SET	BRAKE POSITION	RELEASED	FUNCTION
*-RLS-1A			■	RELEASED INDICATION AND CONTROL
*-RLS-1B	■	■		(UNUSED)
*-RLS-2A				(SPARE)
*-RLS-2B				(SPARE)

SET / RELEASED

*
SM - S MOTOR BRAKE
SE - NE MACH BRAKE
SW - NW MACH BRAKE

BRAKE RELEASED LIMIT SWITCH

NOTE:
HEAVY LINE DENOTES AREA OF SWITCH TRAVEL DURING WHICH CONTACT IS CLOSED.

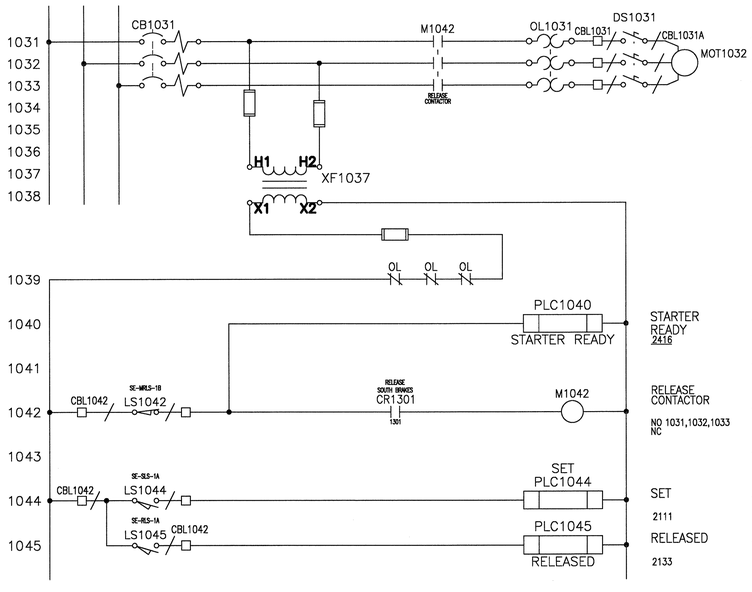

SOUTHEAST MACHINERY BRAKE
(CIRCUIT IN SOUTH MCC)

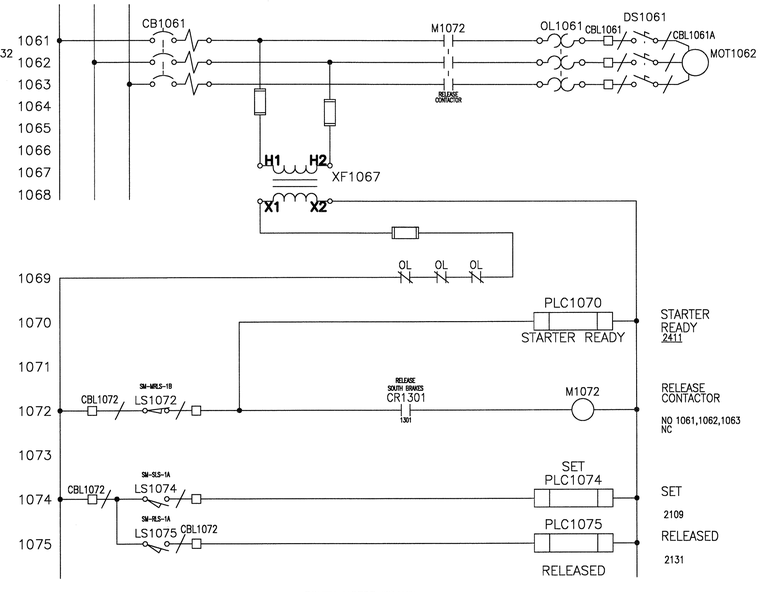

SOUTH MOTOR BRAKE
(CIRCUIT IN SOUTH MCC)

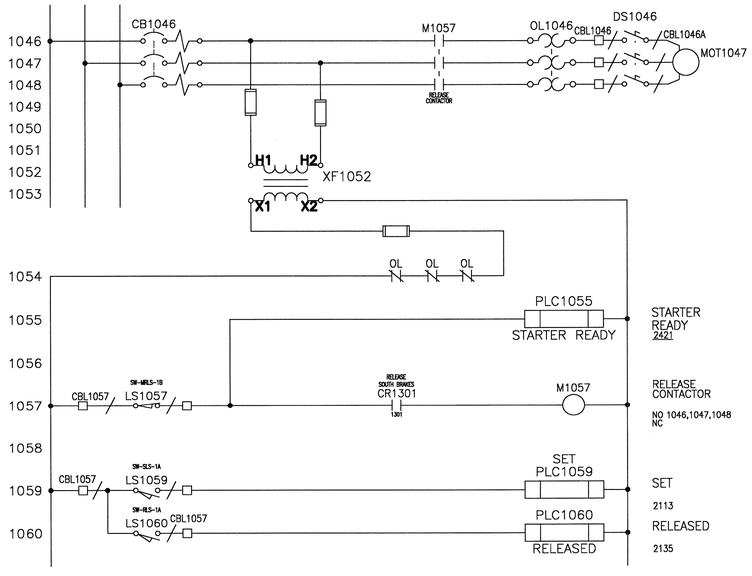

SOUTHWEST MACHINERY BRAKE
(CIRCUIT IN SOUTH MCC)

PROJECT NO. B-2532
CRAVEN COUNTY
STATION: 31+21.29 -L-

NORTH CAROLINA PROFESSIONAL SEAL 031843 ENGINEER GREGORY S. BARON

STATE OF NORTH CAROLINA
DEPARTMENT OF TRANSPORTATION
RALEIGH, NC

SCHEMATIC NO. 10

HNTB NORTH CAROLINA, P.C.
343 E. Six Forks Rd., Suite 200, Raleigh, N.C. 27609

DRAWN BY MAW DATE 9-30-2006
CHECKED BY ALB DATE 10-2-2006
DWG. NO. E-66

REVISIONS						SHEET NO.
NO.	BY	DATE	NO.	BY	DATE	S-327
1			3			TOTAL SHEETS
2			4			348

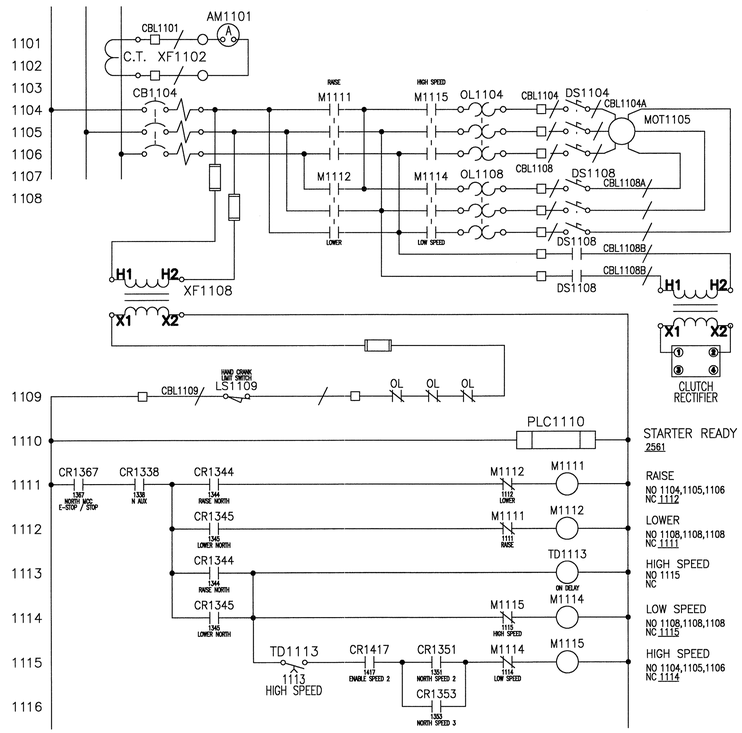

NORTH AUXILIARY SPAN MOTOR
(CIRCUIT IN NORTH MCC)

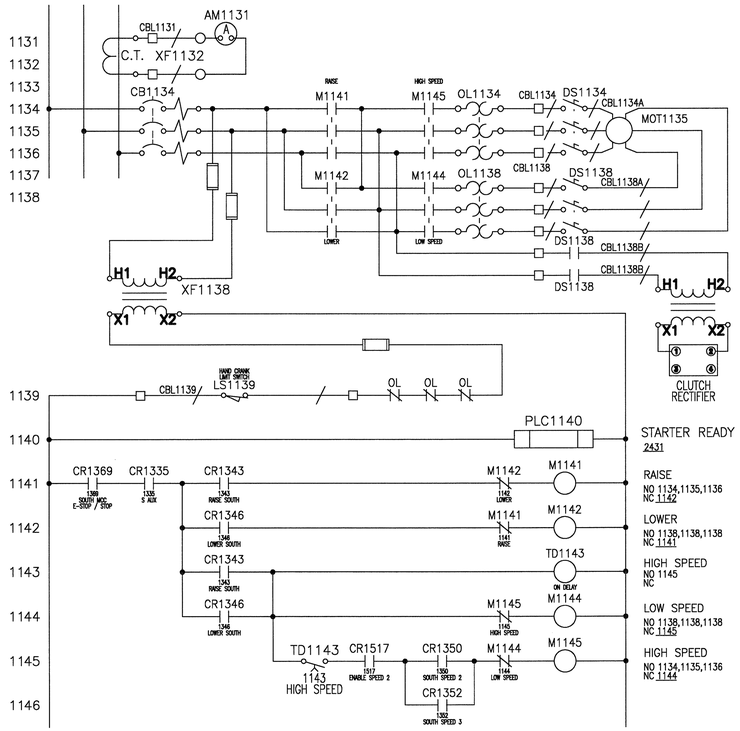

SOUTH AUXILIARY SPAN MOTOR
(CIRCUIT IN SOUTH MCC)

PROJECT NO. B-2532

CRAVEN COUNTY

STATION: 31+21.29 -L-

NORTH CAROLINA PROFESSIONAL SEAL 031843 ENGINEER GREGORY S. BARON

STATE OF NORTH CAROLINA
DEPARTMENT OF TRANSPORTATION
RALEIGH, NC

SCHEMATIC NO. 11

HNTB NORTH CAROLINA, P.C.
343 E. Six Forks Rd., Suite 200, Raleigh, N.C. 27609

DRAWN BY MAW DATE 9-30-2006
CHECKED BY ALB DATE 10-2-2006
DWG. NO. E-67

REVISIONS						SHEET NO.
NO.	BY	DATE	NO.	BY	DATE	S-328
1			3			TOTAL SHEETS
2			4			348

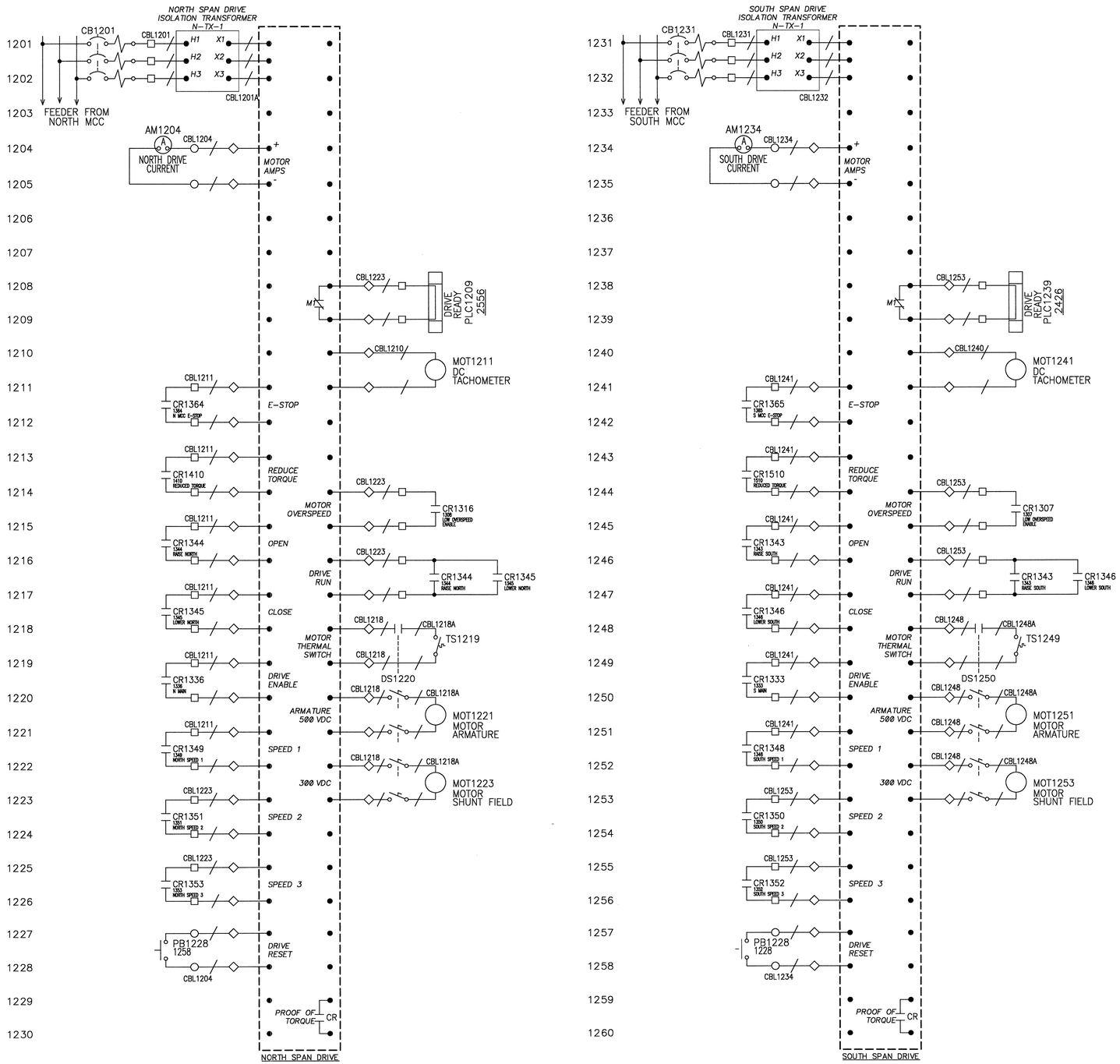

PROJECT NO. B-2532

CRAVEN COUNTY

STATION: 31+21.29 -L-

NORTH CAROLINA PROFESSIONAL SEAL 031843 ENGINEER GREGORY S. BARON

STATE OF NORTH CAROLINA
DEPARTMENT OF TRANSPORTATION
RALEIGH, NC

SCHEMATIC NO. 12

HNTB NORTH CAROLINA, P.C.
343 E. Six Forks Rd., Suite 200, Raleigh, N.C. 27609

DRAWN BY MAW DATE 9-30-2006
CHECKED BY ALB DATE 10-2-2006
DWG. NO. E-68

REVISIONS						SHEET NO.
NO.	BY	DATE	NO.	BY	DATE	S-329
1			3			TOTAL SHEETS
2			4			348

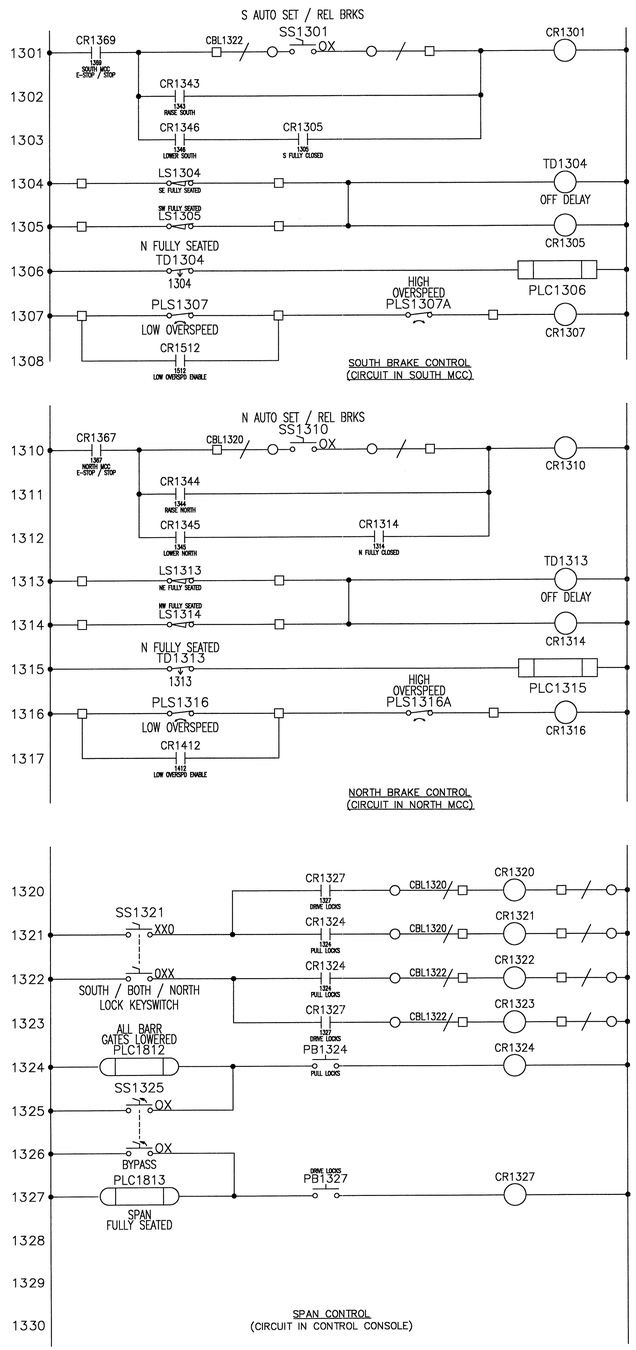

PROJECT NO. B-2532

CRAVEN COUNTY

STATION: 31+21.29 -L-

STATE OF NORTH CAROLINA
DEPARTMENT OF TRANSPORTATION
RALEIGH, NC

SCHEMATIC NO. 13

NORTH CAROLINA PROFESSIONAL SEAL 031843 ENGINEER GREGORY S. BARON

HNTB NORTH CAROLINA, P.C.
343 E. Six Forks Rd., Suite 200, Raleigh, N.C. 27609

DRAWN BY MAW DATE 9-30-2006
CHECKED BY ALB DATE 10-2-2006
DWG. NO. E-69

REVISIONS						SHEET NO.
NO.	BY	DATE	NO.	BY	DATE	S-330
1			3			TOTAL SHEETS
2			4			348

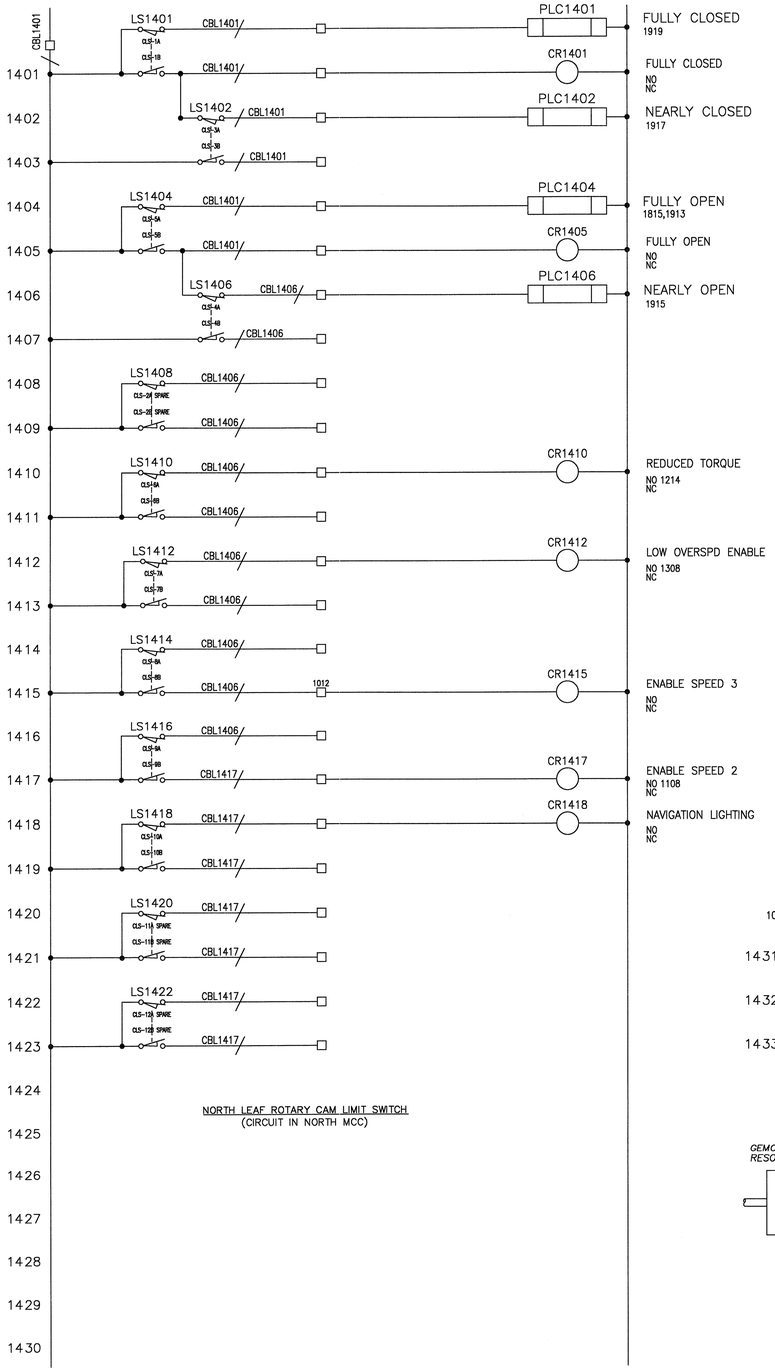

NORTH LEAF ROTARY CAM LIMIT SWITCH
(CIRCUIT IN NORTH MCC)

NORTH LEAF CAM LIMIT SWITCH (CLS) CONTACT DEVELOPMENT

CONTACT	CAM POSITION	FULLY CLOSED	LEAF POSITION	FULLY OPEN	FUNCTION
1A	LO				FULLY CLOSED
1B	HI				
2A	LO				SPARE
2B	HI				
3A	LO				NEARLY CLOSED
3B	HI				
4A	LO				NEARLY OPEN
4B	HI				
5A	LO				FULLY OPEN
5B	HI				
6A	LO				REDUCED TORQUE
6B	HI				
7A	LO				LOW OVERSPEED ENABLE
7B	HI				
8A	LO				ENABLE SPEED 3
8B	HI				
9A	LO				ENABLE SPEED 2
9B	HI				
10A	LO				NAVIGATION LIGHTS
10B	HI				
11A	LO				SPARE
11B	HI				
12A	LO				SPARE
12B	HI				
		CAM		CAM	

NOTE:
HEAVY LINE DENOTES AREA OF SWITCH TRAVEL DURING WHICH CONTACT IS CLOSED.

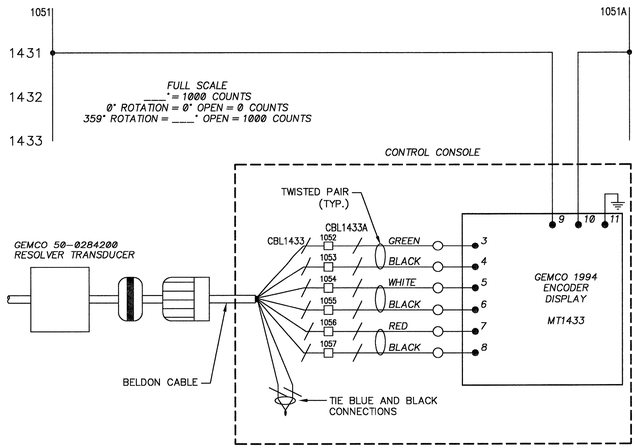

PROJECT NO. B-2532

CRAVEN COUNTY

STATION: 31+21.29 -L-

NORTH CAROLINA PROFESSIONAL SEAL 031843 ENGINEER GREGORY S. BARON

STATE OF NORTH CAROLINA
DEPARTMENT OF TRANSPORTATION
RALEIGH, NC

SCHEMATIC NO. 14

HNTB HNTB NORTH CAROLINA, P.C.
343 E. Six Forks Rd., Suite 200, Raleigh, N.C. 27609

DRAWN BY MAW DATE 9-30-2006
CHECKED BY ALB DATE 10-2-2006
DWG. NO. E-70

REVISIONS						SHEET NO.
NO.	BY	DATE	NO.	BY	DATE	S-331
1			3			TOTAL SHEETS
2			4			248

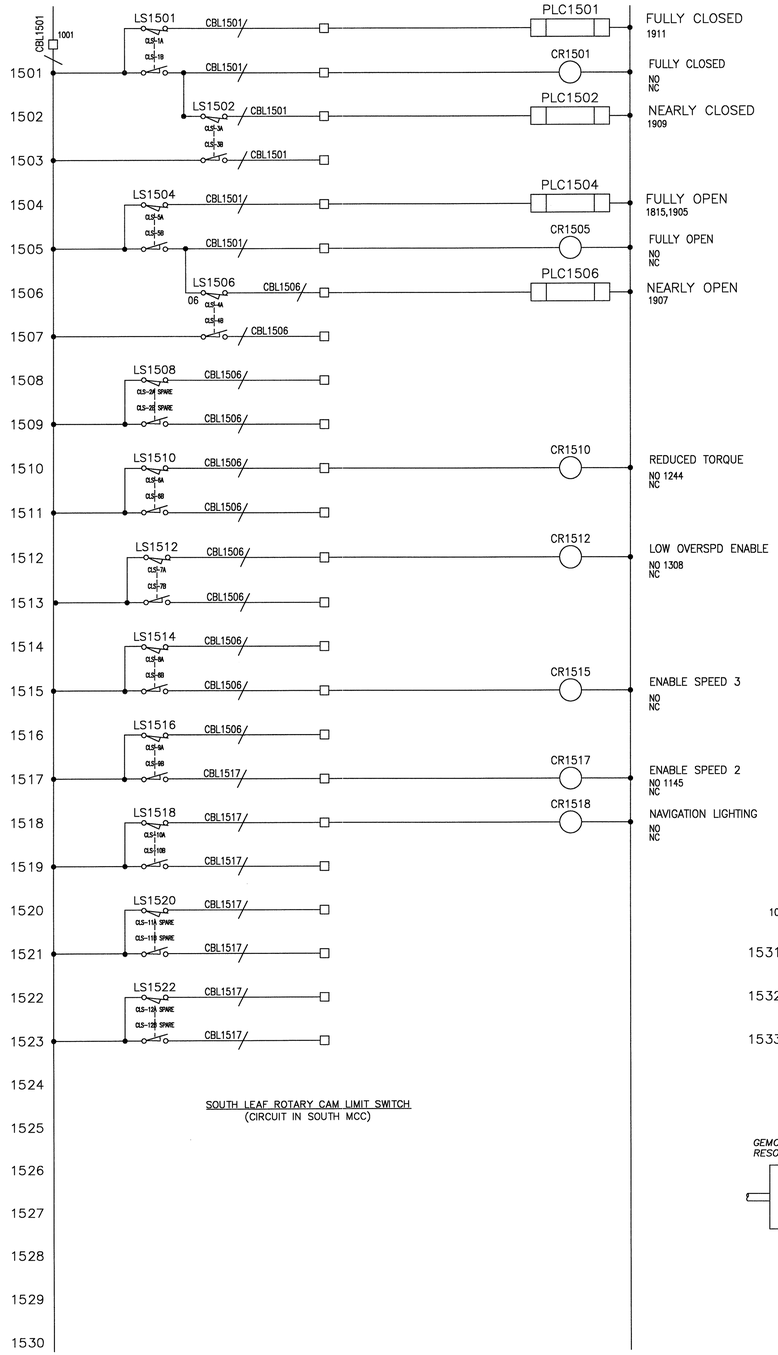

SOUTH LEAF ROTARY CAM LIMIT SWITCH
(CIRCUIT IN SOUTH MCC)

SOUTH LEAF CAM LIMIT SWITCH (CLS) CONTACT DEVELOPMENT

CONTACT	CAM POSITION	FULLY CLOSED	LEAF POSITION	FULLY OPEN	FUNCTION
1A	LO				FULLY CLOSED
1B	HI				
2A	LO				SPARE
2B	HI				
3A	LO				NEARLY CLOSED
3B	HI				
4A	LO				NEARLY OPEN
4B	HI				
5A	LO				FULLY OPEN
5B	HI				
6A	LO				REDUCED TORQUE
6B	HI				
7A	LO				LOW OVERSPEED ENABLE
7B	HI				
8A	LO				ENABLE SPEED 3
8B	HI				
9A	LO				ENABLE SPEED 2
9B	HI				
10A	LO				NAVIGATION LIGHTS
10B	HI				
11A	LO				SPARE
11B	HI				
12A	LO				SPARE
12B	HI				

NOTE:
HEAVY LINE DENOTES AREA OF SWITCH TRAVEL DURING WHICH CONTACT IS CLOSED.

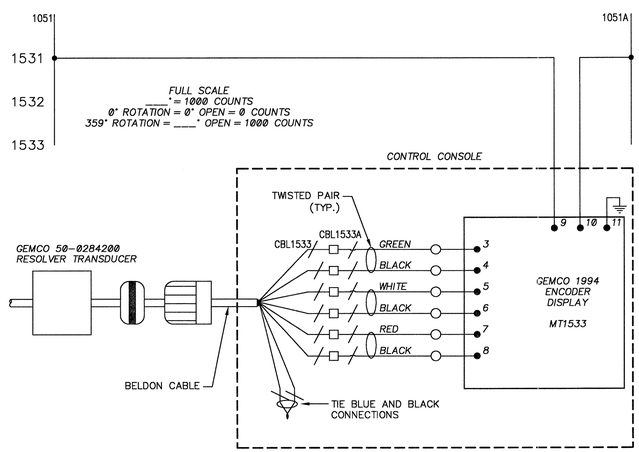

PROJECT NO. B-2532

CRAVEN COUNTY

STATION: 31+21.29 -L-

NORTH CAROLINA PROFESSIONAL SEAL 031843 ENGINEER GREGORY S. BARON

STATE OF NORTH CAROLINA
DEPARTMENT OF TRANSPORTATION
RALEIGH, NC

SCHEMATIC NO. 15

HNTB NORTH CAROLINA, P.C.
343 E. Six Forks Rd., Suite 200, Raleigh, N.C. 27609

DRAWN BY MAW DATE 9-30-2006
CHECKED BY ALB DATE 10-2-2006
DWG. NO. E-71

REVISIONS						SHEET NO.
NO.	BY	DATE	NO.	BY	DATE	S-332
1			3			TOTAL SHEETS
2			4			346

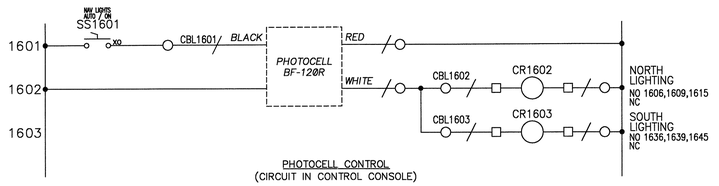

PHOTOCELL CONTROL
(CIRCUIT IN CONTROL CONSOLE)

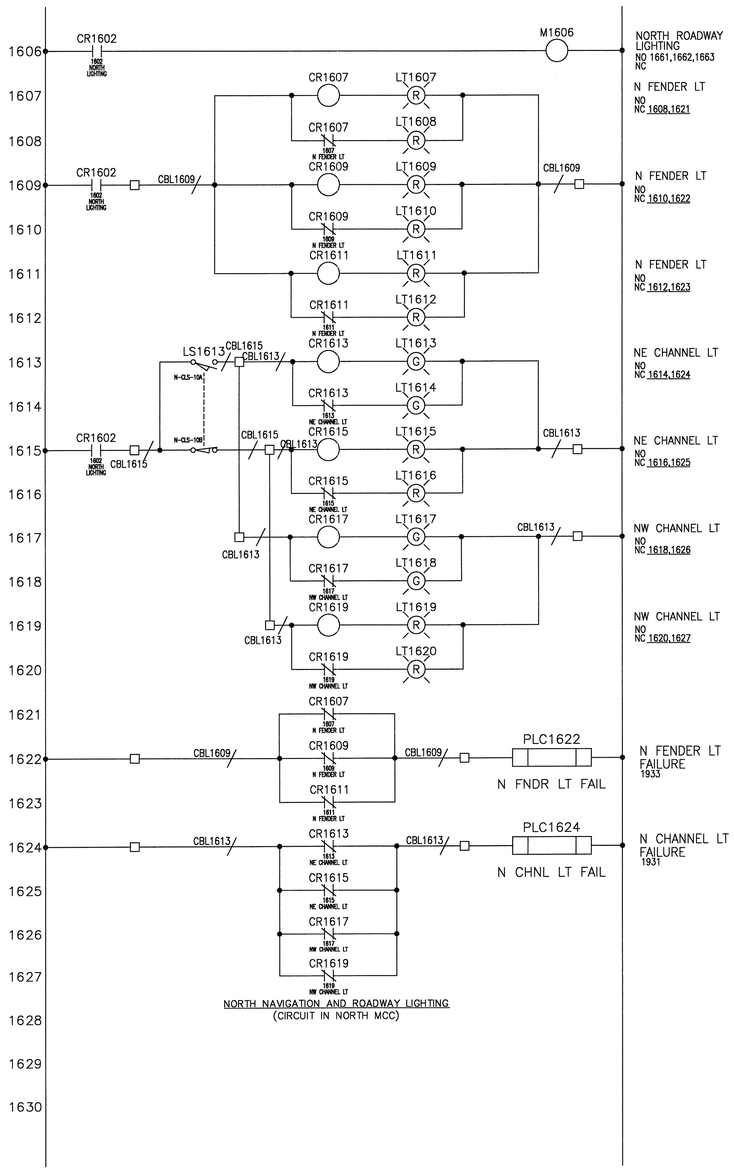

NORTH NAVIGATION AND ROADWAY LIGHTING
(CIRCUIT IN NORTH MCC)

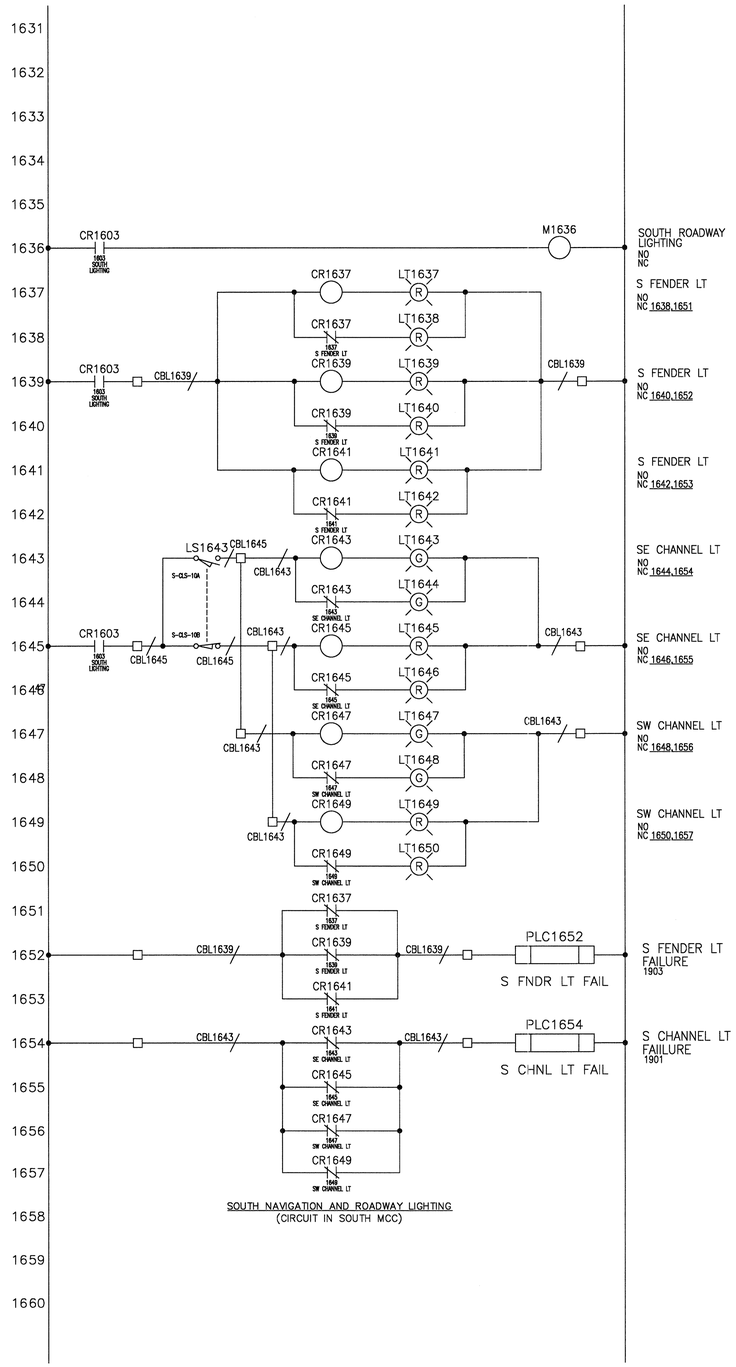

SOUTH NAVIGATION AND ROADWAY LIGHTING
(CIRCUIT IN SOUTH MCC)

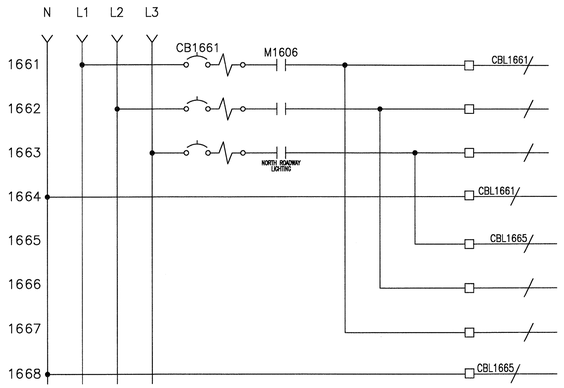

NORTH ROADWAY LIGHTING
(CONTACTOR IN NORTH MCC -
POWERED WITH 208/120 VAC FROM NLP)

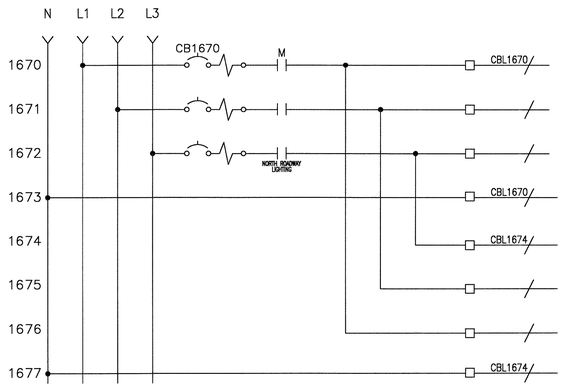

SOUTH ROADWAY LIGHTING
(CONTACTOR IN SOUTH MCC -
POWERED WITH 208/120 VAC FROM SLP)

PROJECT NO. B-2532

CRAVEN COUNTY

STATION: 31+21.29 -L-

NORTH CAROLINA PROFESSIONAL SEAL 031843 ENGINEER GREGORY S. BARON

STATE OF NORTH CAROLINA
DEPARTMENT OF TRANSPORTATION
RALEIGH, NC

SCHEMATIC NO. 16

HNTB NORTH CAROLINA, P.C.
343 E. Six Forks Rd., Suite 200, Raleigh, N.C. 27609

DRAWN BY MAW DATE 9-30-2006
CHECKED BY ALB DATE 10-2-2006
DWG. NO. E-72

REVISIONS						SHEET NO.
NO.	BY	DATE	NO.	BY	DATE	S-333
1			3			TOTAL SHEETS
2			4			348

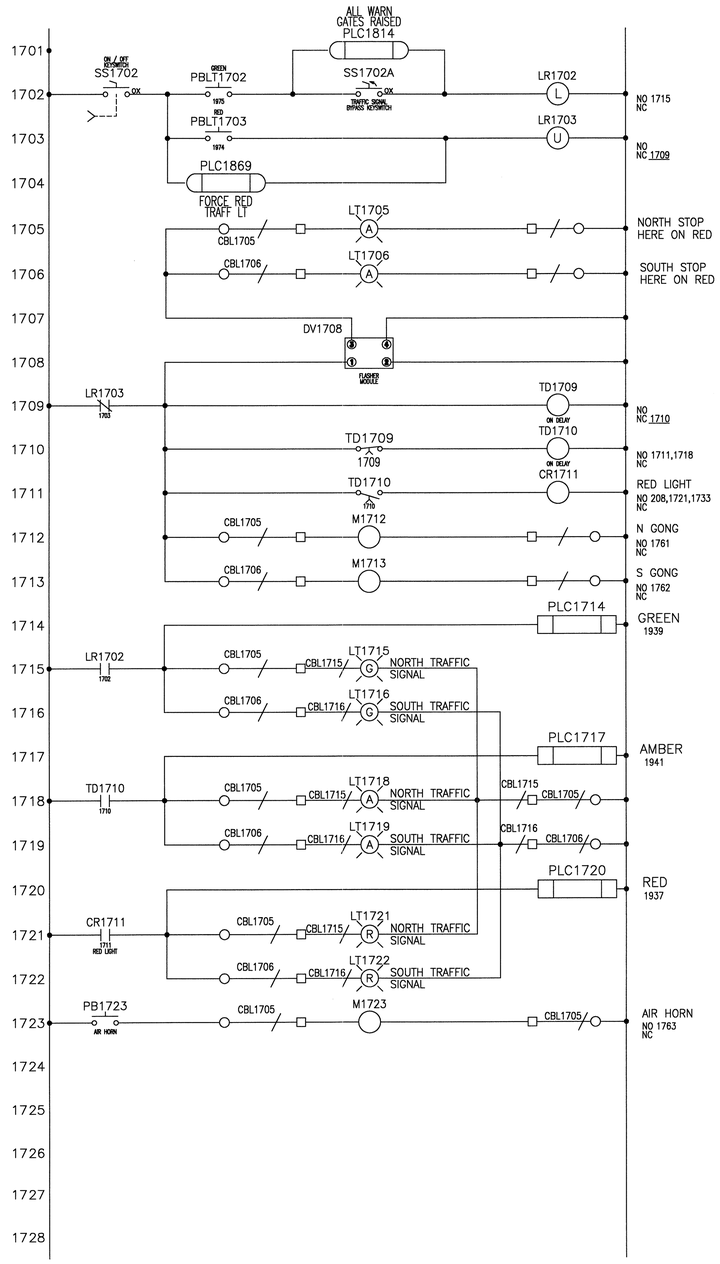

TRAFFIC SIGNAL CONTROL
(CIRCUIT IN CONTROL CONSOLE)

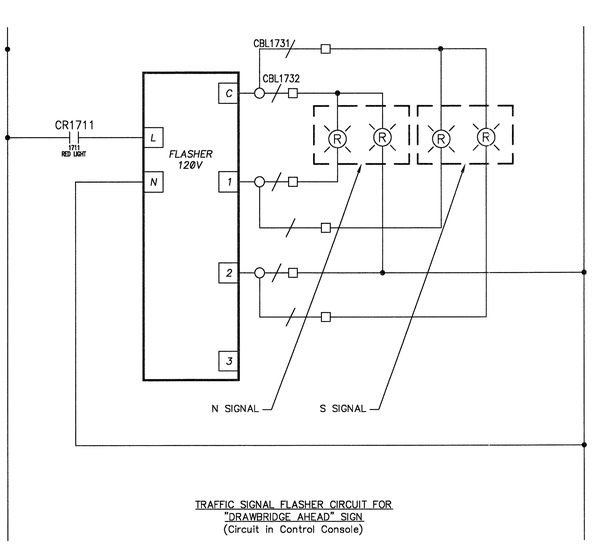

TRAFFIC SIGNAL FLASHER CIRCUIT FOR "DRAWBRIDGE AHEAD" SIGN
(Circuit in Control Console)

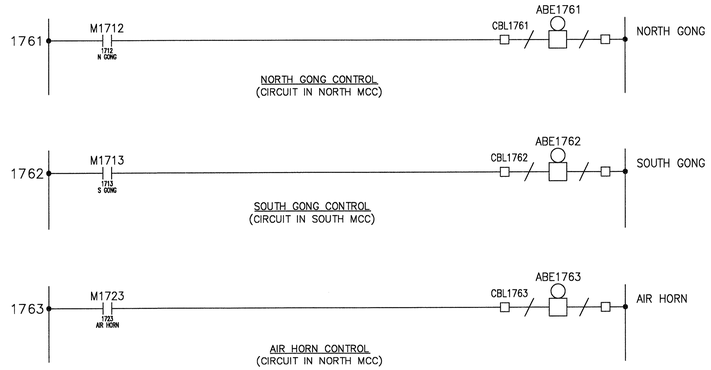

PROJECT NO. B-2532

CRAVEN COUNTY

STATION: 31+21.29 -L-

NORTH CAROLINA PROFESSIONAL SEAL 031843 ENGINEER GREGORY S. BARON

STATE OF NORTH CAROLINA
DEPARTMENT OF TRANSPORTATION
RALEIGH, NC

SCHEMATIC NO.17

HNTB NORTH CAROLINA, P.C.
343 E. Six Forks Rd., Suite 200, Raleigh, N.C. 27609

DRAWN BY MAW DATE 9-30-2006
CHECKED BY ALB DATE 10-2-2006
DWG. NO. E-73

REVISIONS						SHEET NO.
NO.	BY	DATE	NO.	BY	DATE	S-334
1			3			TOTAL SHEETS
2			4			348

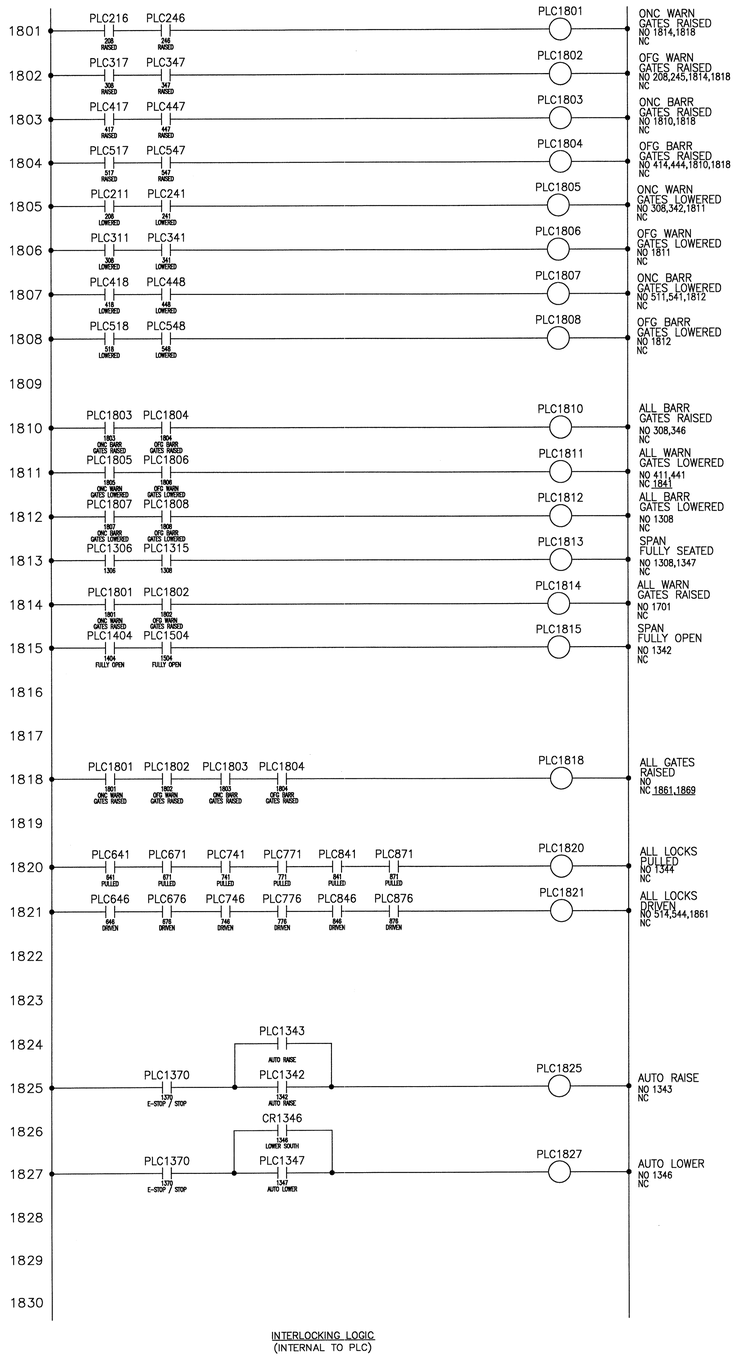

INTERLOCKING LOGIC
(INTERNAL TO PLC)

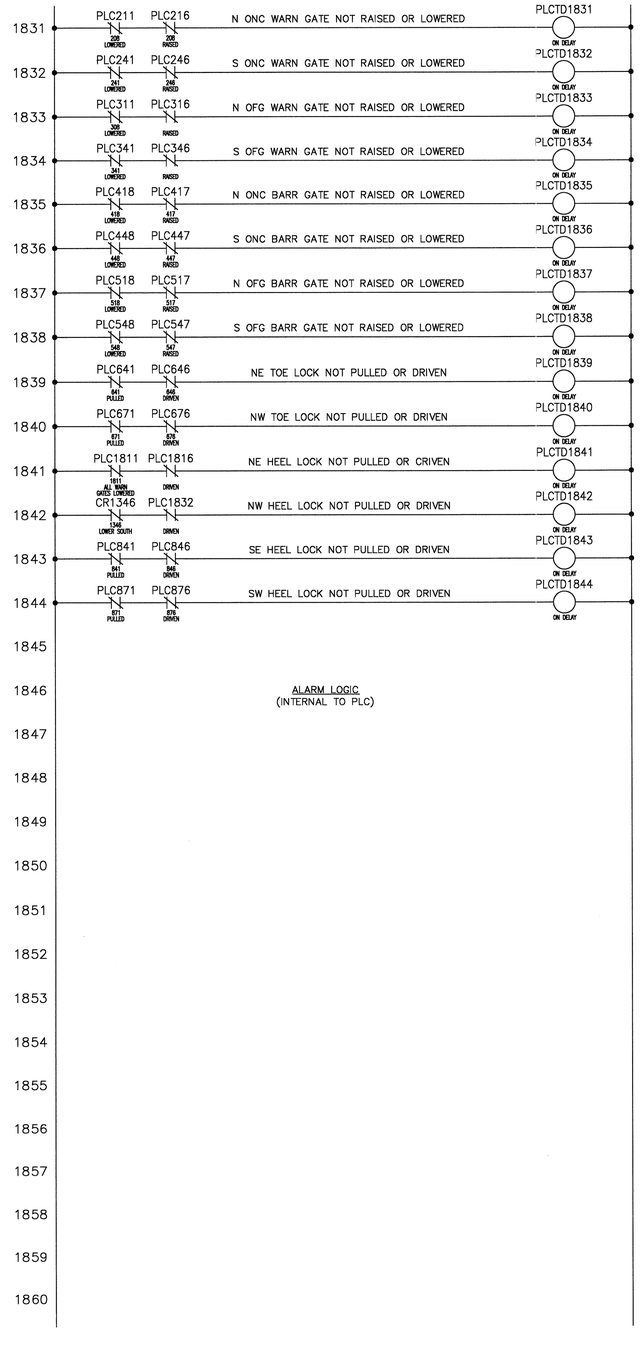

ALARM LOGIC
(INTERNAL TO PLC)

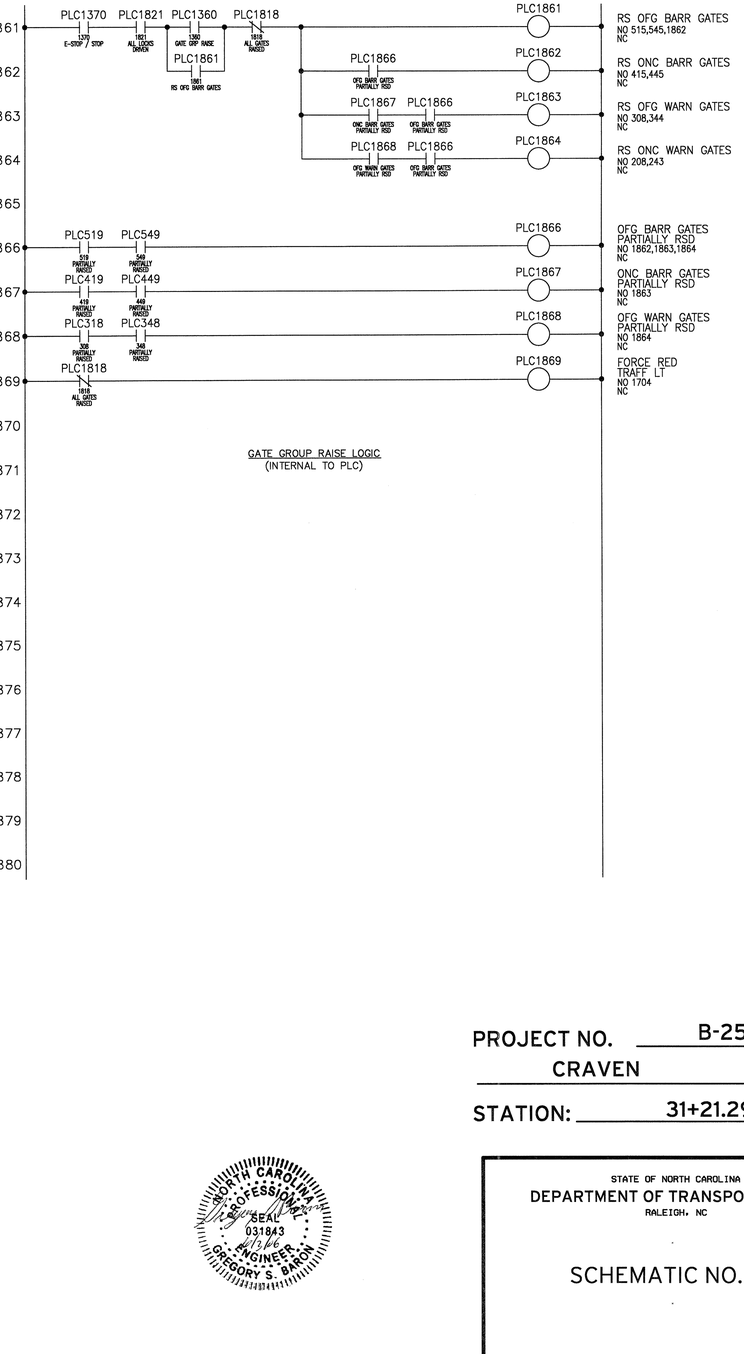

GATE GROUP RAISE LOGIC
(INTERNAL TO PLC)

PROJECT NO. B-2532

CRAVEN COUNTY

STATION: 31+21.29 -L-

NORTH CAROLINA PROFESSIONAL SEAL 031843 ENGINEER GREGORY S. BARON 12/6

STATE OF NORTH CAROLINA
DEPARTMENT OF TRANSPORTATION
RALEIGH, NC

SCHEMATIC NO. 18

HNTB HNTB NORTH CAROLINA, P.C.
343 E. Six Forks Rd., Suite 200, Raleigh, N.C. 27609

DRAWN BY MAW DATE 9-30-2006
CHECKED BY ALB DATE 10-2-2006
DWG. NO. E-74

REVISIONS						SHEET NO.
NO.	BY	DATE	NO.	BY	DATE	S-335
1			3			TOTAL SHEETS
2			4			348

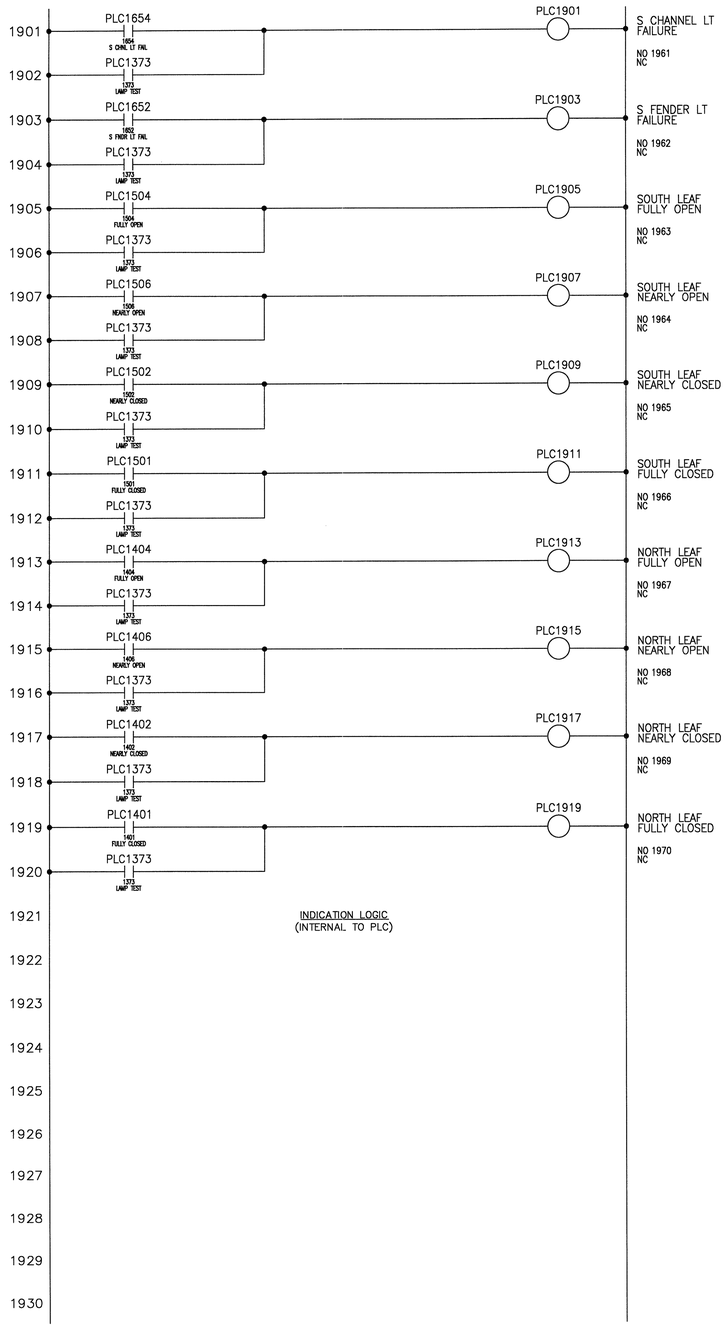

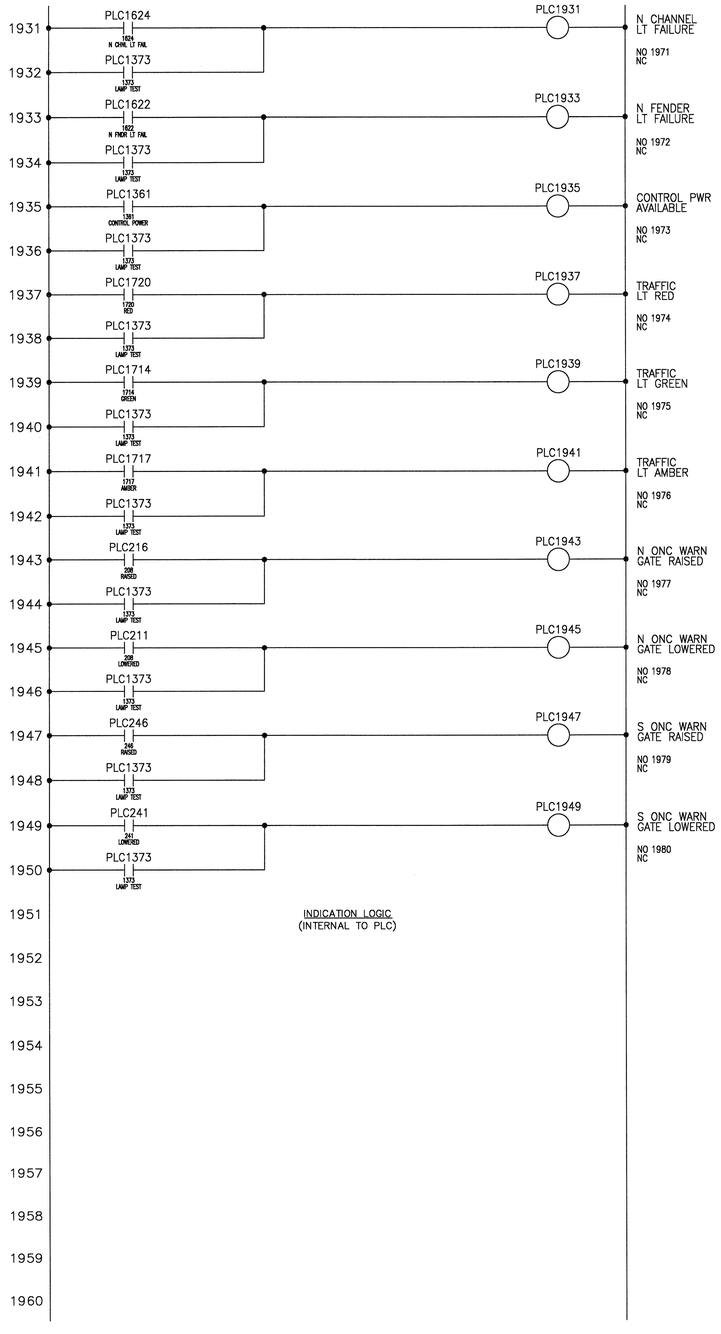

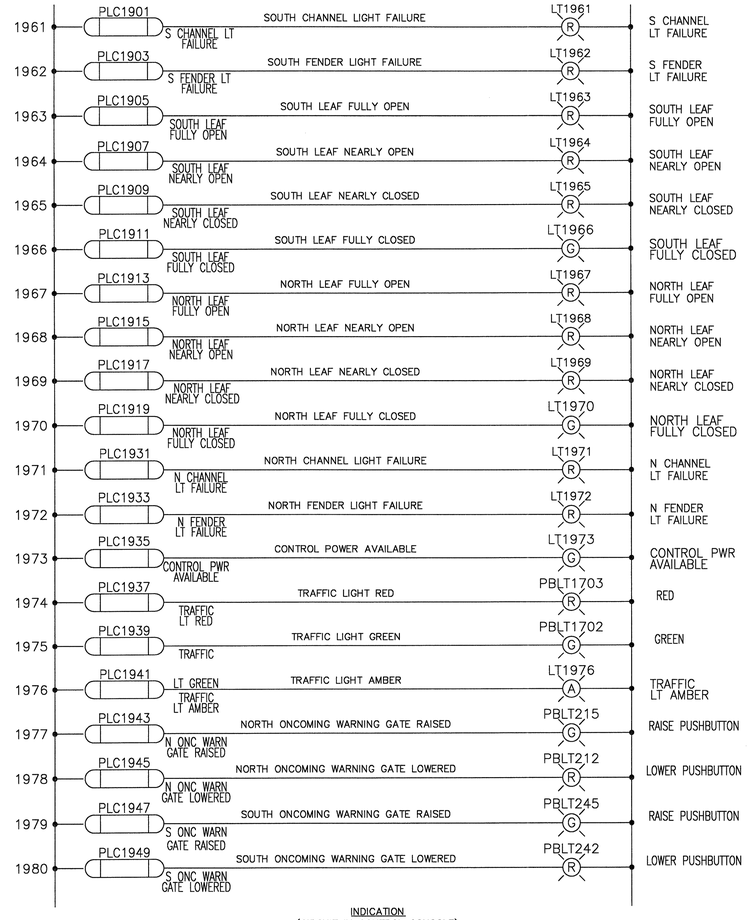

PROJECT NO. B-2532

CRAVEN COUNTY

STATION: 31+21.29 -L-

NORTH CAROLINA PROFESSIONAL SEAL 031843 ENGINEER GREGORY S. BARON

STATE OF NORTH CAROLINA
DEPARTMENT OF TRANSPORTATION
RALEIGH, NC

SCHEMATIC NO. 19

HNTB NORTH CAROLINA, P.C.
343 E. Six Forks Rd., Suite 200, Raleigh, N.C. 27609

DRAWN BY MAW DATE 9-30-2006
CHECKED BY ALB DATE 10-2-2006
DWG. NO. E-75

REVISIONS						SHEET NO.
NO.	BY	DATE	NO.	BY	DATE	S-336
1			3			TOTAL SHEETS
2			4			346

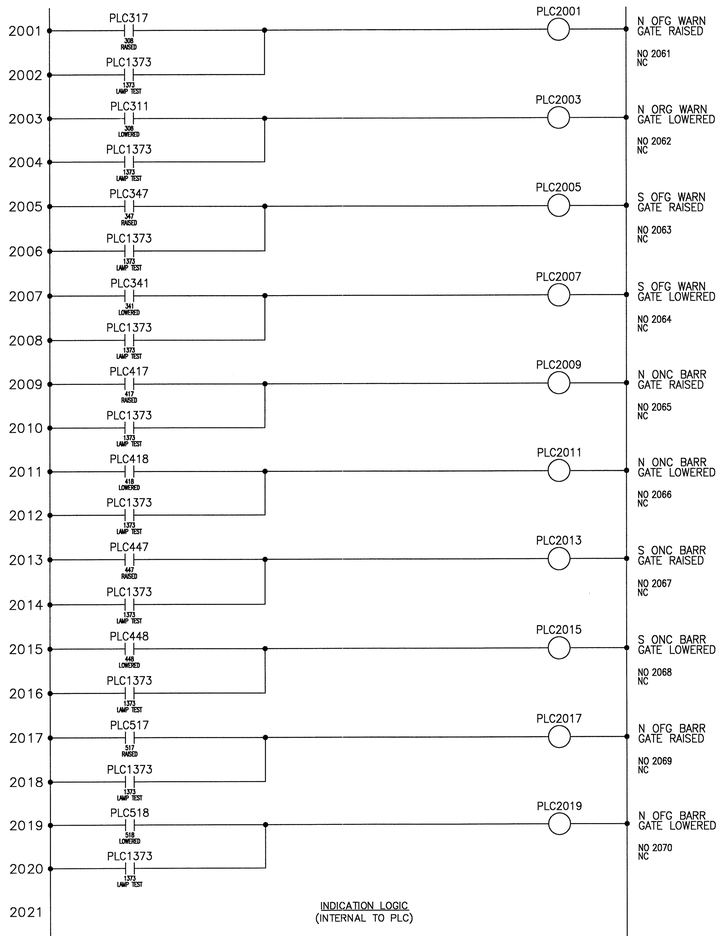

INDICATION LOGIC
(INTERNAL TO PLC)

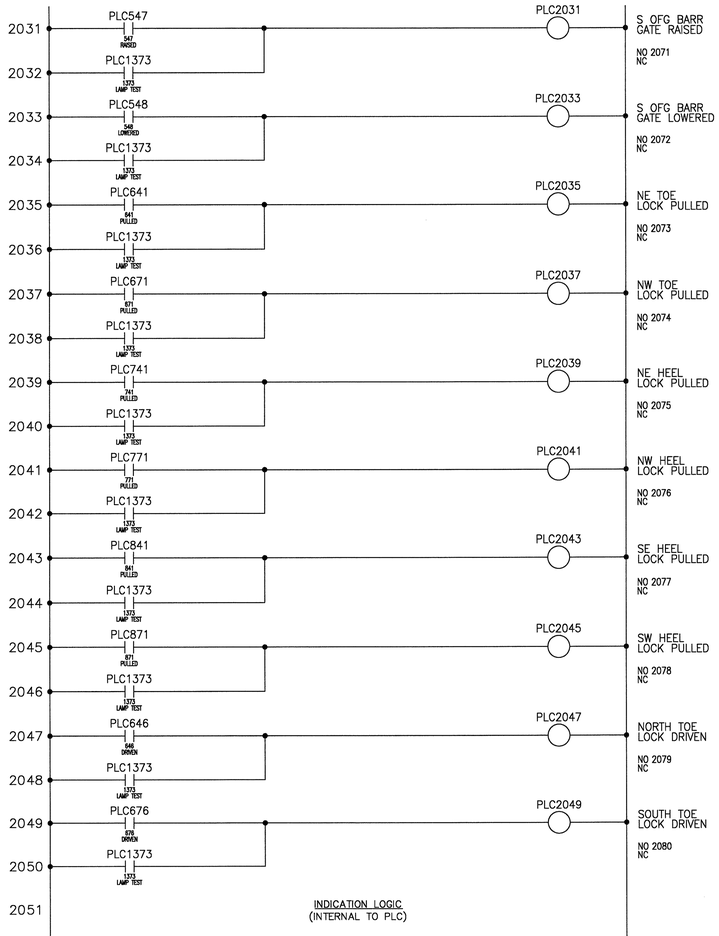

INDICATION LOGIC
(INTERNAL TO PLC)

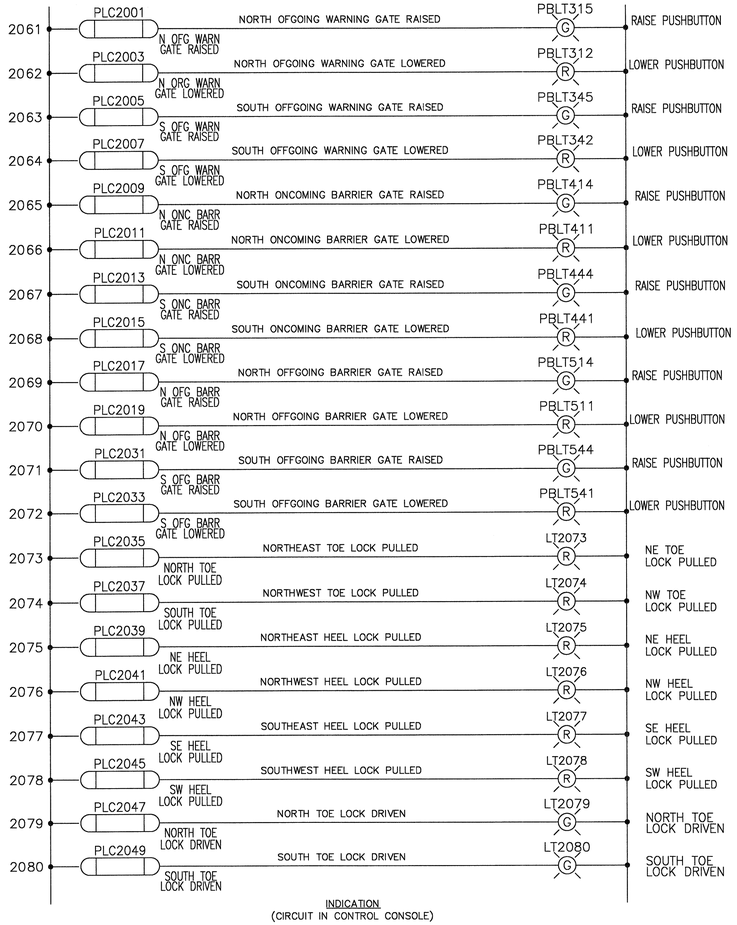

INDICATION
(CIRCUIT IN CONTROL CONSOLE)

PROJECT NO. B-2532

CRAVEN COUNTY

STATION: 31+21.29 -L-

NORTH CAROLINA PROFESSIONAL SEAL 031843 ENGINEER GREGORY S. BARON

STATE OF NORTH CAROLINA
DEPARTMENT OF TRANSPORTATION
RALEIGH, NC

SCHEMATIC NO. 20

HNTB NORTH CAROLINA, P.C.
343 E. Six Forks Rd., Suite 200, Raleigh, N.C. 27609

DRAWN BY MAW DATE 9-30-2006
CHECKED BY ALB DATE 10-2-2006
DWG. NO. E-76

REVISIONS						SHEET NO.
NO.	BY	DATE	NO.	BY	DATE	S-337
1			3			TOTAL SHEETS
2			4			348

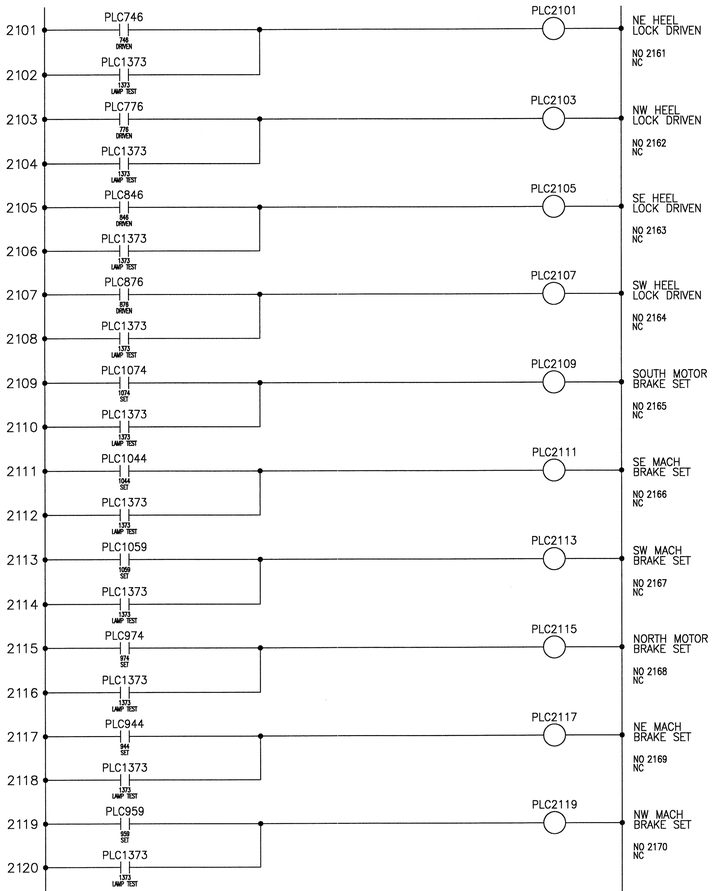

INDICATION LOGIC
(INTERNAL TO PLC)

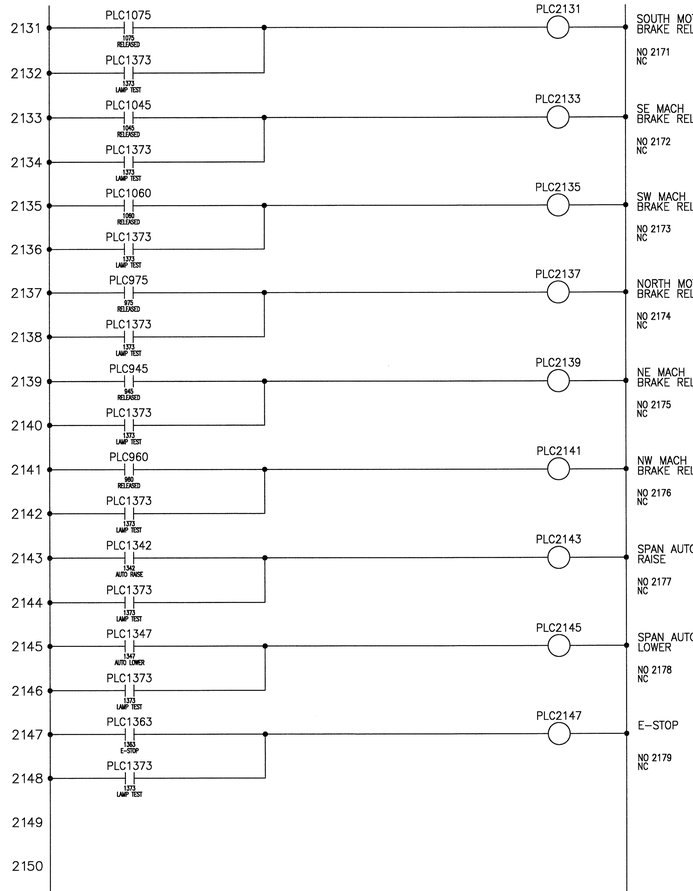

INDICATION LOGIC
(INTERNAL TO PLC)

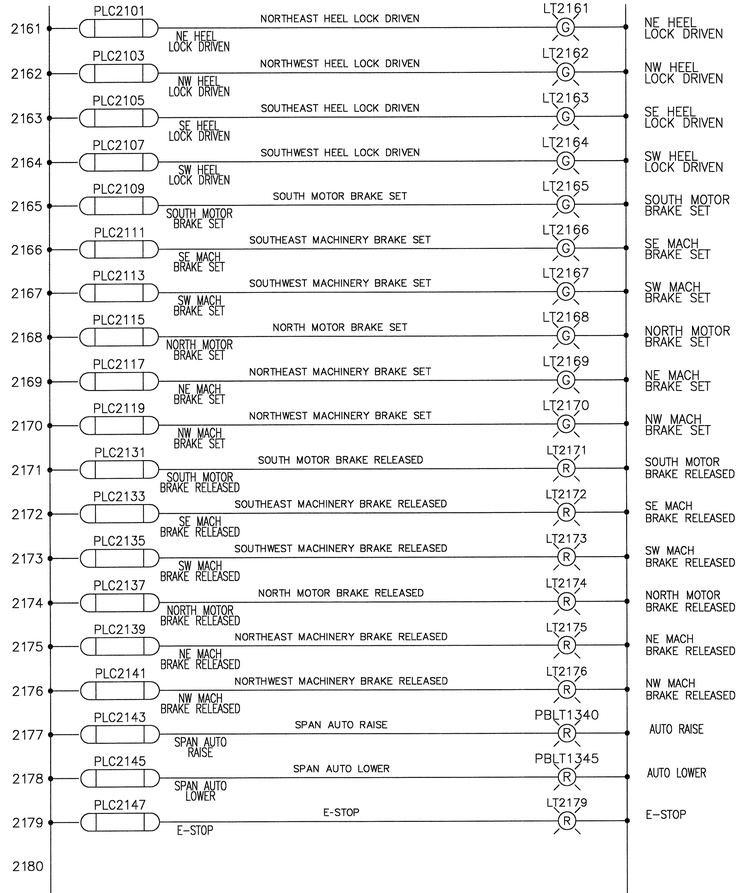

INDICATION
CIRCUIT IN CONTROL CONSOLE)

PROJECT NO. B-2532

CRAVEN COUNTY

STATION: 31+21.29 -L-

NORTH CAROLINA PROFESSIONAL SEAL 031843 ENGINEER GREGORY S. BARON

STATE OF NORTH CAROLINA
DEPARTMENT OF TRANSPORTATION
RALEIGH, NC

SCHEMATIC NO. 21

HNTB NORTH CAROLINA, P.C.
343 E. Six Forks Rd., Suite 200, Raleigh, N.C. 27609

DRAWN BY MAW DATE 9-30-2006
CHECKED BY ALB DATE 10-2-2006

DWG. NO. E-77

REVISIONS						SHEET NO.
NO.	BY	DATE	NO.	BY	DATE	S-338
1			3			TOTAL SHEETS
2			4			348

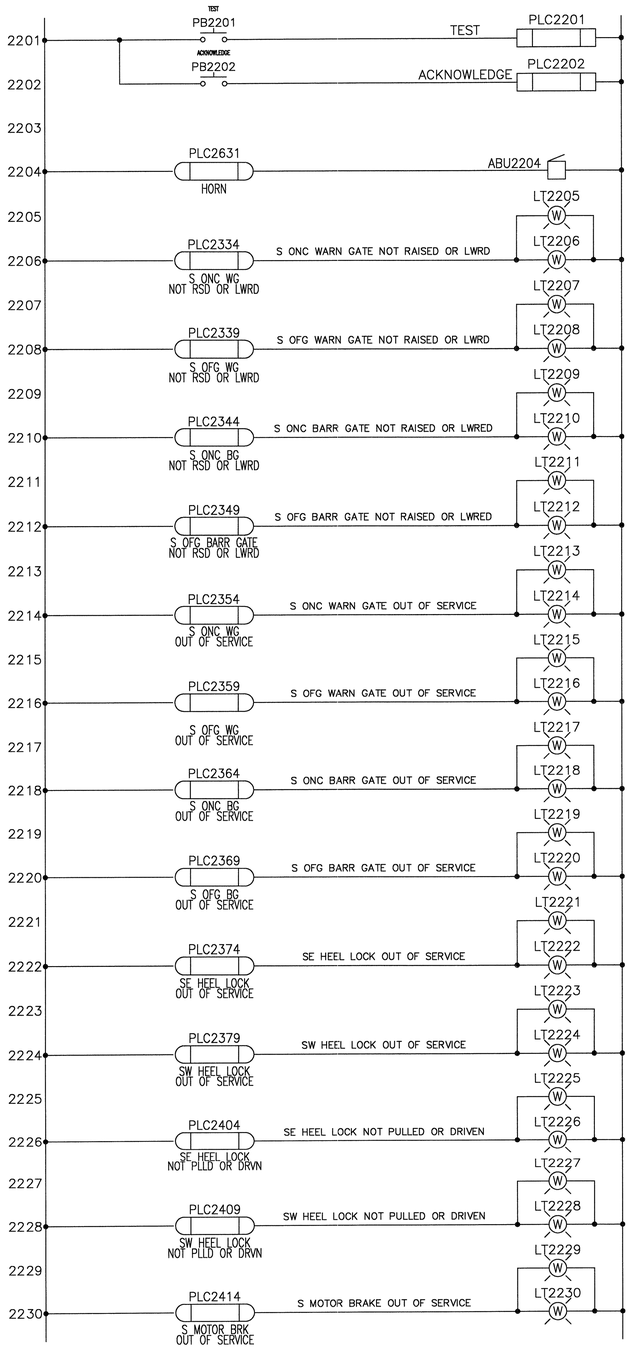

ALARM ANNUNCIATOR
(CIRCUIT IN CONTROL AND ALARM CONSOLES)

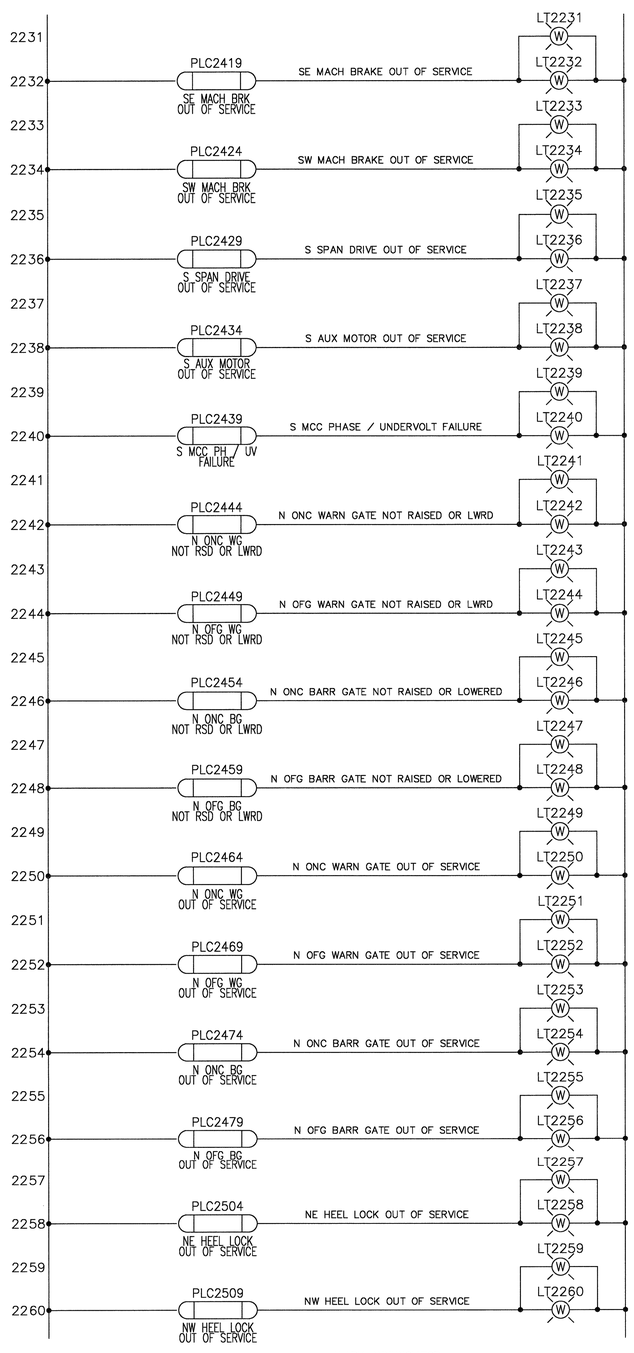

ALARM ANNUNCIATOR
(CIRCUIT IN CONTROL AND ALARM CONSOLES)

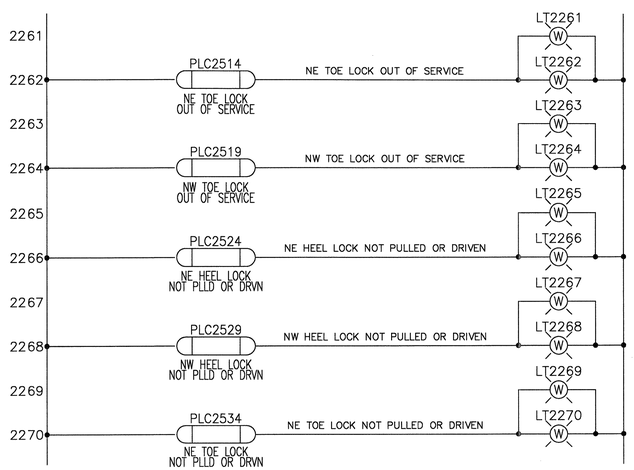

ALARM ANNUNCIATOR
(CIRCUIT IN CONTROL AND ALARM CONSOLES)

PROJECT NO. B-2532

CRAVEN COUNTY

STATION: 31+21.29 -L-

NORTH CAROLINA PROFESSIONAL SEAL 031843 ENGINEER GREGORY S. BARON

STATE OF NORTH CAROLINA
DEPARTMENT OF TRANSPORTATION
RALEIGH, NC

SCHEMATIC NO. 22

HNTB NORTH CAROLINA, P.C.
343 E. Six Forks Rd., Suite 200, Raleigh, N.C. 27609

DRAWN BY MAW DATE 9-30-2006
CHECKED BY ALB DATE 10-2-2006

DWG. NO. E-78

REVISIONS						SHEET NO.
NO.	BY	DATE	NO.	BY	DATE	S-339
1			3			TOTAL SHEETS
2			4			348

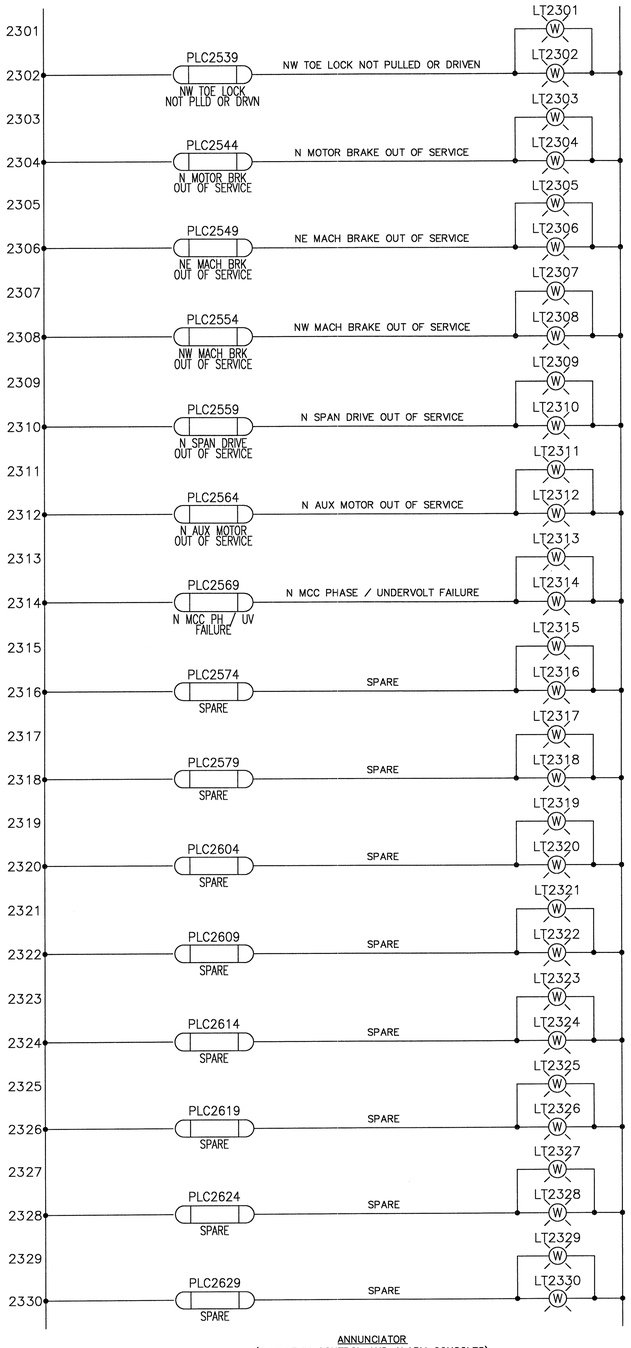

ANNUNCIATOR
(CIRCUIT IN CONTROL AND ALARM CONSOLES)

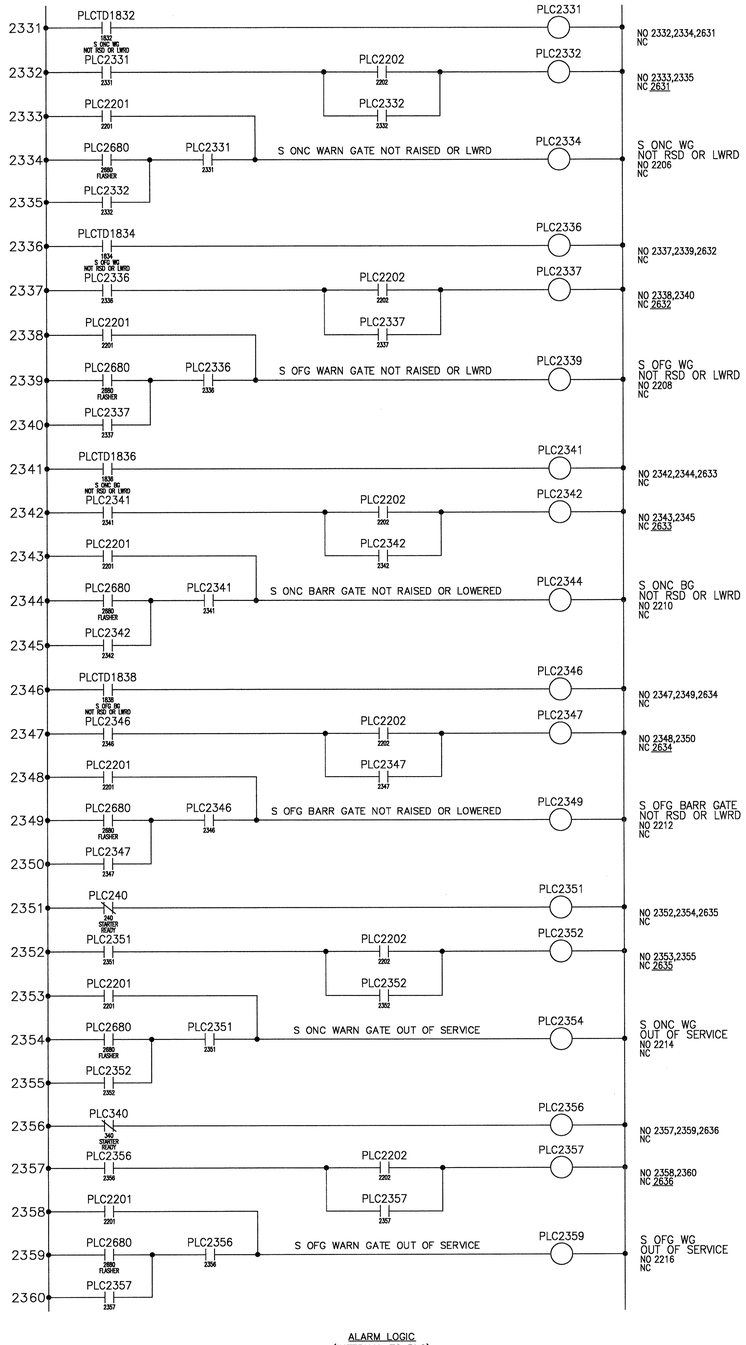

ALARM LOGIC
(INTERNAL TO PLC)

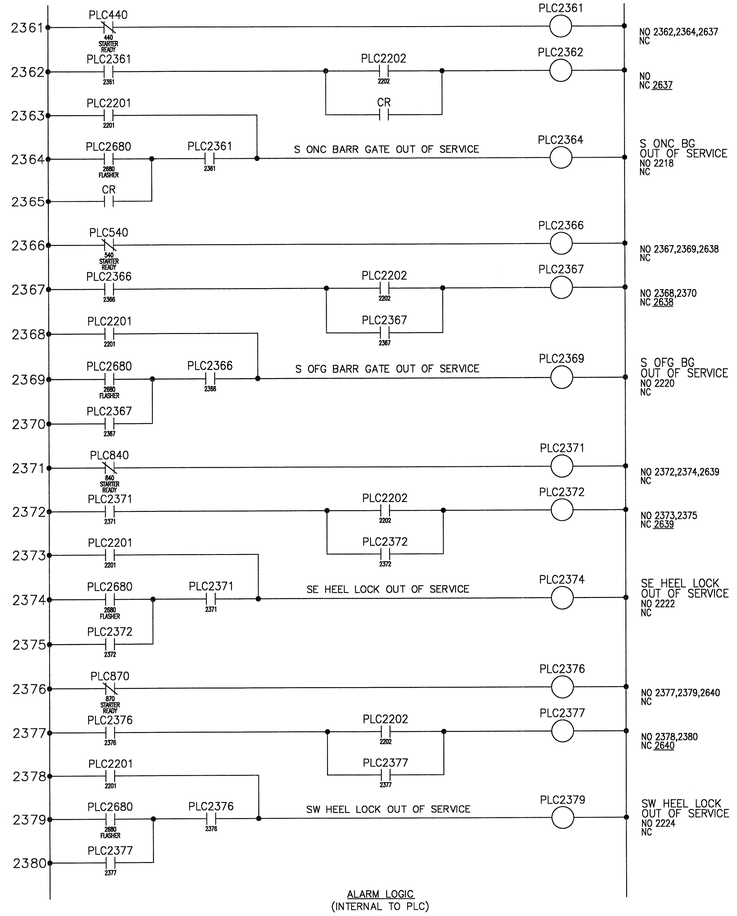

ALARM LOGIC
(INTERNAL TO PLC)

PROJECT NO. B-2532

CRAVEN COUNTY

STATION: 31+21.29 -L-

NORTH CAROLINA PROFESSIONAL SEAL 031843 ENGINEER GREGORY S. BARON

STATE OF NORTH CAROLINA
DEPARTMENT OF TRANSPORTATION
RALEIGH, NC

SCHEMATIC NO. 23

HNTB NORTH CAROLINA, P.C.
343 E. Six Forks Rd., Suite 200, Raleigh, N.C. 27609

DRAWN BY MAW DATE 9-30-2006
CHECKED BY ALB DATE 10-2-2006
DWG. NO. E-79

REVISIONS						SHEET NO.
NO.	BY	DATE	NO.	BY	DATE	S-340
1			3			TOTAL SHEETS
2			4			348

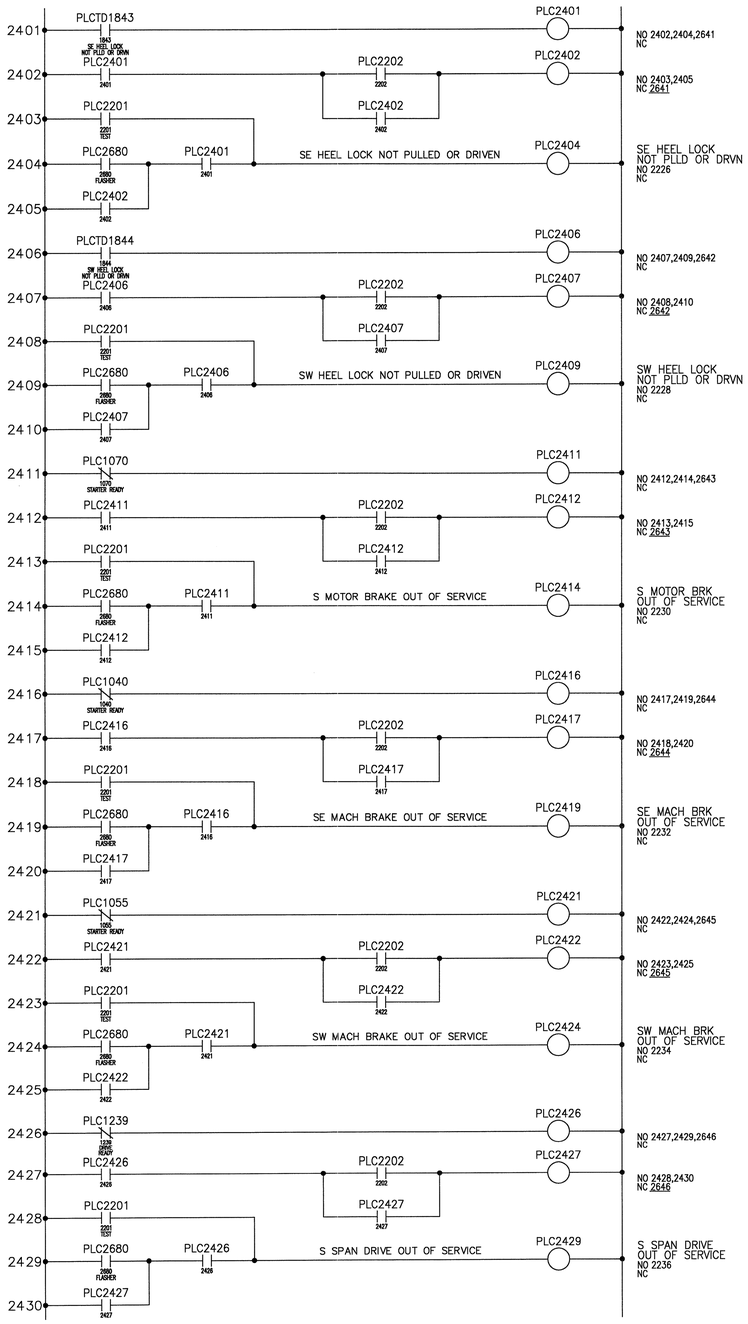

ALARM LOGIC
(INTERNAL TO PLC)

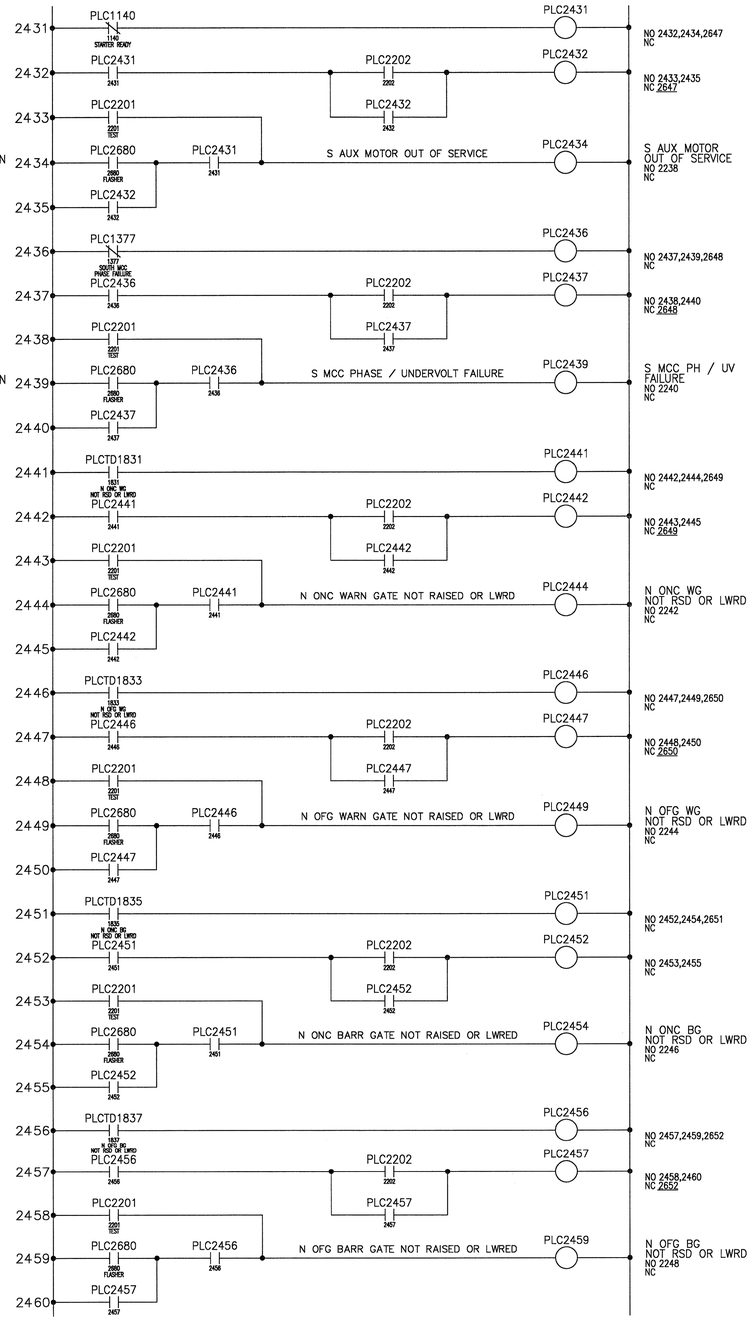

ALARM LOGIC
(INTERNAL TO PLC)

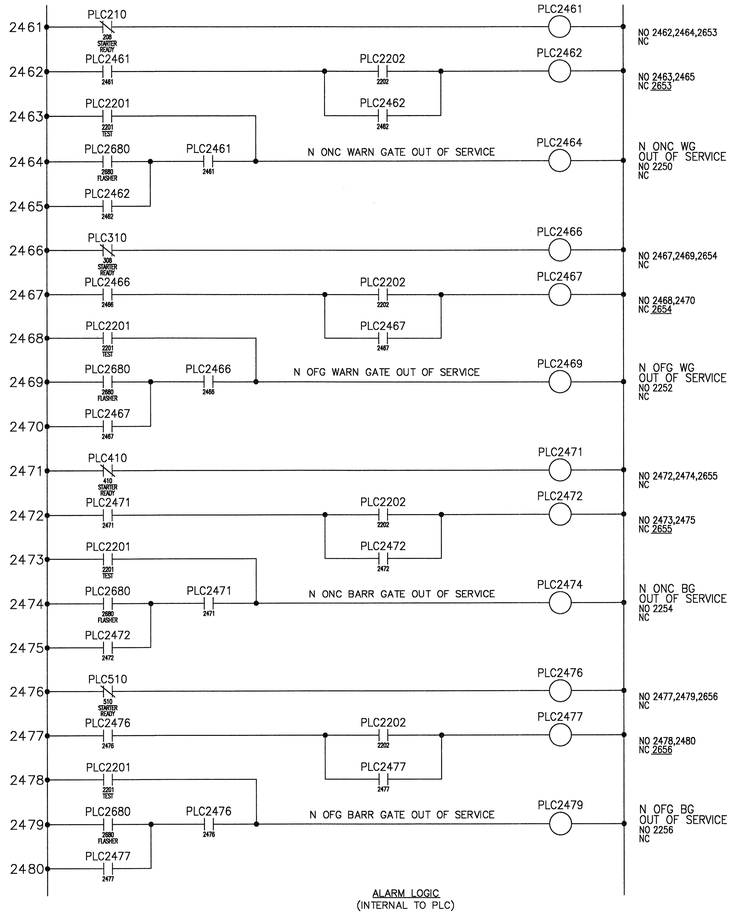

ALARM LOGIC
(INTERNAL TO PLC)

PROJECT NO. B-2532

CRAVEN COUNTY

STATION: 31+21.29 -L-

NORTH CAROLINA PROFESSIONAL SEAL 031843 ENGINEER GREGORY S. BARON

STATE OF NORTH CAROLINA
DEPARTMENT OF TRANSPORTATION
RALEIGH, NC

SCHEMATIC NO. 24

HNTB HNTB NORTH CAROLINA, P.C.
343 E. Six Forks Rd., Suite 200, Raleigh, N.C. 27609

DRAWN BY MAW DATE 9-30-2006
CHECKED BY ALB DATE 10-2-2006

DWG. NO. E-80

REVISIONS						SHEET NO.
NO.	BY	DATE	NO.	BY	DATE	S-341
1			3			TOTAL SHEETS
2			4			348

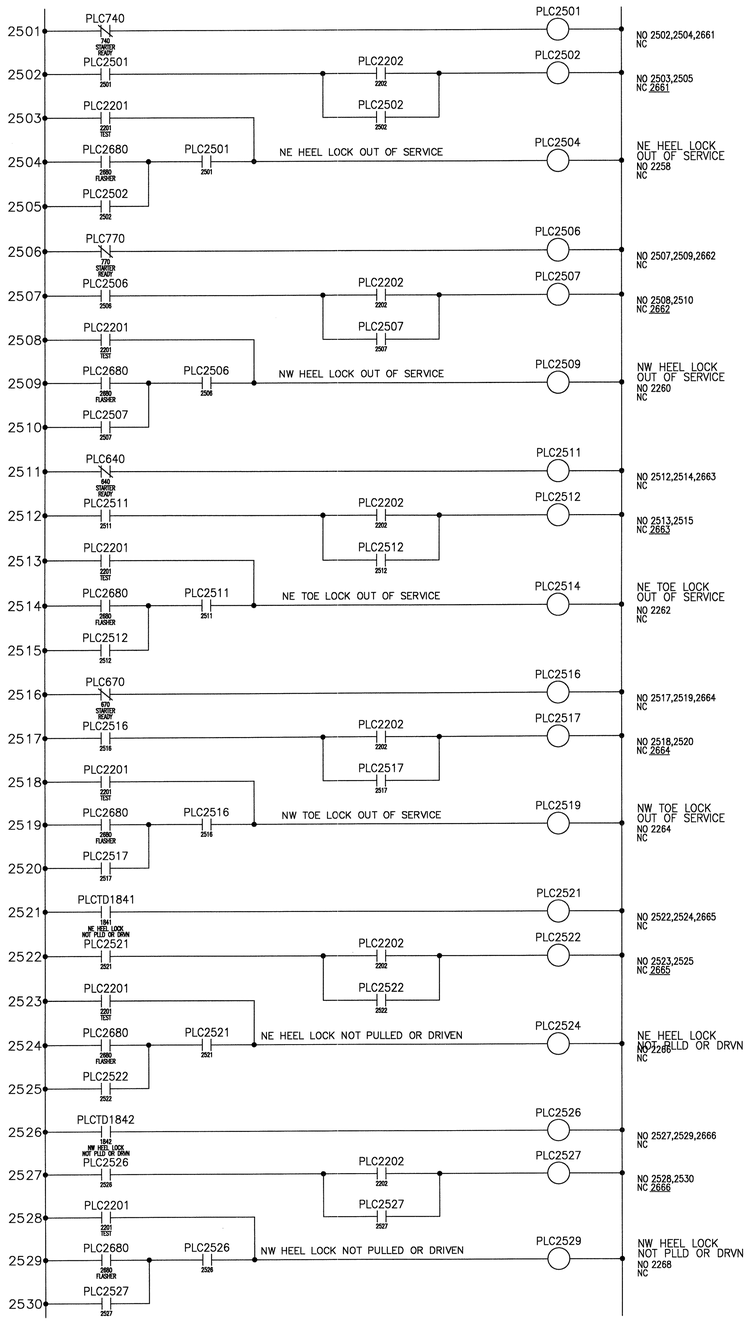

ALARM LOGIC
(INTERNAL TO PLC)

ALARM LOGIC
(INTERNAL TO PLC)

ALARM LOGIC
(INTERNAL TO PLC)

PROJECT NO. B-2532

CRAVEN COUNTY

STATION: 31+21.29 -L-

NORTH CAROLINA PROFESSIONAL SEAL 031843 ENGINEER GREGORY S. BARON

STATE OF NORTH CAROLINA
DEPARTMENT OF TRANSPORTATION
RALEIGH, NC

SCHEMATIC NO. 25

HNTB NORTH CAROLINA, P.C.
343 E. Six Forks Rd., Suite 200, Raleigh, N.C. 27609

DRAWN BY MAW DATE 9-30-2006
CHECKED BY ALB DATE 10-2-2006

DWG. NO. E-81

REVISIONS						SHEET NO.
NO.	BY	DATE	NO.	BY	DATE	S-392
1			3			TOTAL SHEETS
2			4			348

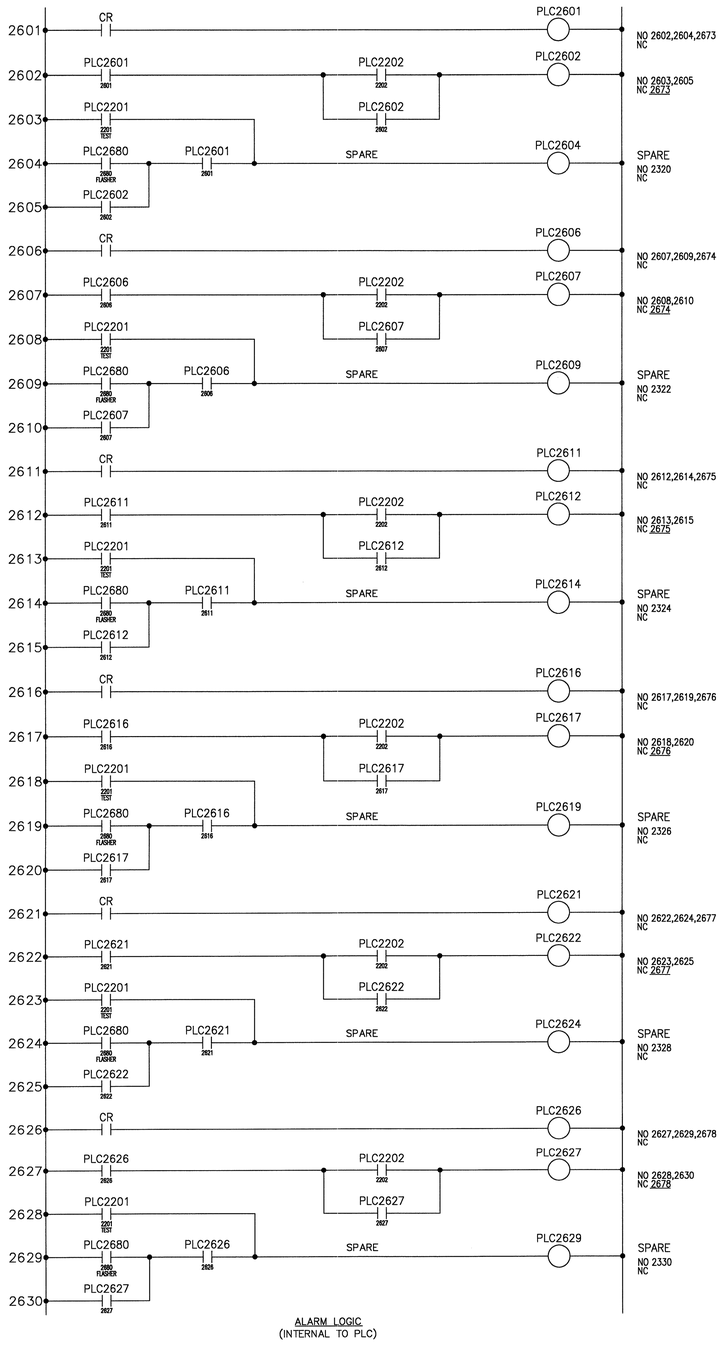

ALARM LOGIC
(INTERNAL TO PLC)

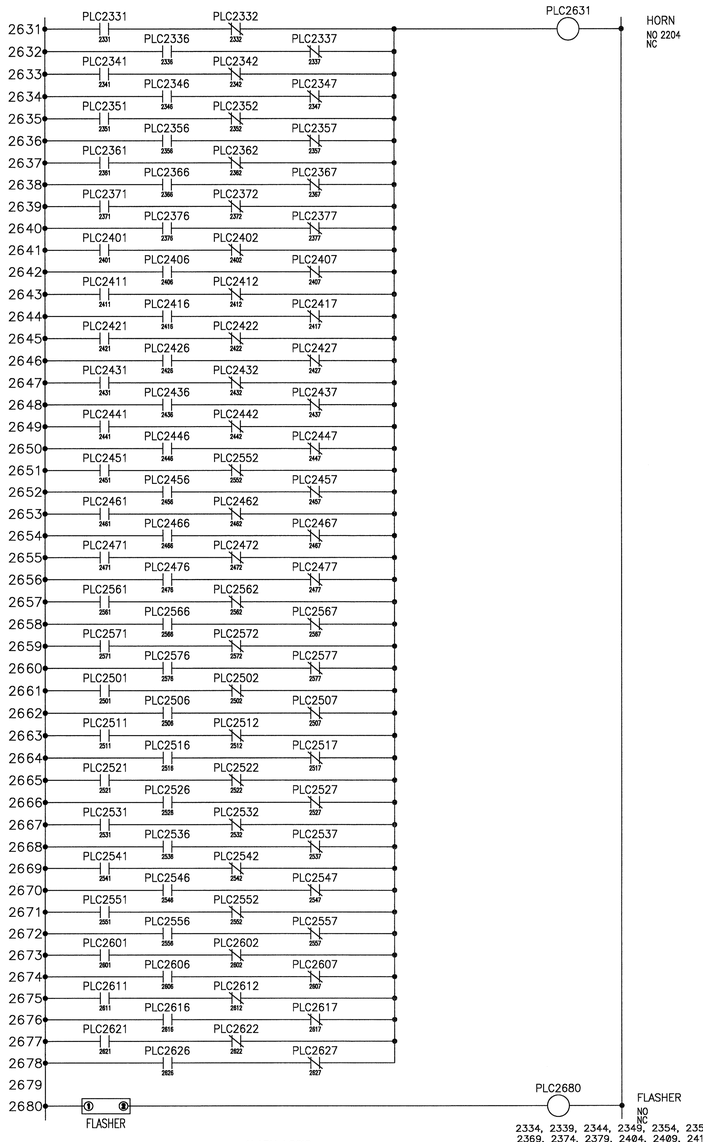

ALARM LOGIC
(INTERNAL TO PLC)

PROJECT NO. B-2532

CRAVEN COUNTY

STATION: 31+21.29 -L-

NORTH CAROLINA PROFESSIONAL SEAL 031843 ENGINEER GREGORY S. BARON

STATE OF NORTH CAROLINA
DEPARTMENT OF TRANSPORTATION
RALEIGH, NC

SCHEMATIC NO. 26

HNTB NORTH CAROLINA, P.C.
343 E. Six Forks Rd., Suite 200, Raleigh, N.C. 27609

DRAWN BY MAW DATE 9-30-2006
CHECKED BY ALB DATE 10-2-2006
DWG. NO. E-82

REVISIONS						SHEET NO.
NO.	BY	DATE	NO.	BY	DATE	B-343
1			3			TOTAL SHEETS
2			4			348

CIRCUIT	FROM	TO	NO.	SPEC	RACEWAY ROUTING							
CBL000	UTILITY TRANSFORMER	SERVICE DISCONNECT CB	8	350-B-1	R1							
CBL000A	SERVICE DISCONNECT BREAKER	ELECTRIC CT CABINET	8	350-B-1	R3							
CBL001	ELECTRIC CT CABINET	MAIN DISCONNECT	8	350-B-1	R100	M1						
CBL002	MAIN DISCONNECT	ATS	8	350-B-1	R20							
CBL003	GENERATOR	ATS	4	250-B-1	R18							
CBL003B	GENERATOR	ATS	1	14-D-12	R19							
CBL004	ATS	NORTH MCC	4	250-B-1	R6							
CBL005	NORTH MCC - POWER	SOUTH MCC - POWER	4	250-B-1	T1	W3	37N	SUB	37S	W6	T2	
CBL006	NORTH LIGHTING PANEL - NLP	NORTH MCC - N ROADWAY LTG	4	10-B-1	R16A	T1						
CBL007	SOUTH LIGHTING PANEL - SLP	SOUTH MCC - S ROADWAY LTG	4	10-B-1	R85A	T2						
CBL008	BRIDGE CONTROL PANEL - BCP	CONTROL CONSOLE	4	10-B-1								
CBL009	NORTH MCC	NORTH LTG TRANSFORMER	4	1/0-B-1	R7							
CBL010	NORTH LIGHTING TRANSFORMER	NORTH LTG PANEL - NLP	4	1/0-B-1	R21							
CBL011	NORTH LIGHTING PANEL	BRIDGE CONTROL PANEL	4	6-B-1	R16	T1	W1					
CBL012	SOUTH MCC	SOUTH LTG TRANSFORMER	4	2-B-B1	R83							
CBL013	SOUTH LIGHTING TRANSFORMER	SOUTH LTG PANEL - SLP	4	2-B-1	R84							
CBL014	N SUMP PUMP CONTROLLER	NORTH MCC	4	10-B-1	R5							
CBL014B	N SUMP PUMP CONTROLLER	SUMP PUMP	4	10-B-1	R21	T1	W1	13N	R101			
CBL015	S SUMP PUMP CONTROLLER	SOUTH MCC	4	10-B-1	R87	T2						
CBL015B	S SUMP PUMP CONTROLLER	SUMP PUMP	4	10-B-1	R66	T2	W4	13S	R102			
CBL016	BRIDGE CONTROL PANEL	NORTH MCC	3	10-B-1	T1							
CBL017	BRIDGE CONTROL PANEL	SOUTH MCC	3	10-B-1	T1	W3	37N	SUB	37S	W6	T2	
*CBL018	NE SPARE DROOP CABLE		1	10-D-12								
*CBL019	NW SPARE DROOP CABLE		1	10-D-12								
*CBL020	SE SPARE DROOP CABLE		1	10-D-12								
*CBL021	SW SPARE DROOP CABLE		1	10-D-12								
CBL109	CONTROL CONSOLE	NORTH MCC - METERING	1	14-D-12	T1							
CBL139	CONTROL CONSOLE	SOUTH MCC - METERING	1	14-D-12	T1	W3	37N	SUB	37S	W6	T2	
CBL161	CONTROL CONSOLE	ATS	1	14-D-12	R9	T1						
CBL201	NW WARN GATE DISC - DS201	NORTH MCC	1	10-H-3	M3	13N	W1	T1				
CBL209	NW WARN GATE	NORTH MCC	1	14-D-12	M3	13N	W1	T1				
CBL209S	NW WARN GATE	NORTH MCC	1	14-D-4	M3	13N	W1	T1				
CBL218	NW WARN GATE	NORTH MCC	1	10-H-3	M3	13N	W1	T1				
CBL212	NW WARN GATE	NORTH MCC	1	14-D-7	M3	13N	W1	T1				
CBL231	SE WARN GATE DISC - DS231	SOUTH MCC	3	10-H-3	M5	13S	W4	T2				
CBL239	SE WARNING GATE	SOUTH MCC	1	14-D-12	M5	13S	W4	T2				
CBL239S	SE WARNING GATE	SOUTH MCC	1	14-D-4	M5	13S	W4	T2				
CBL248	SE WARNING GATE	SOUTH MCC	1	10-H-3	M5	13S	W4	T2				

CIRCUIT	FROM	TO	NO.	SPEC	RACEWAY ROUTING							
CBL242	CONTROL CONSOLE	SOUTH MCC	1	14-D-7	T1	W3	37N	SUB	37S	W6	T2	
CBL301	NE WARN GATE DISC - DS301	NORTH MCC	1	10-H-3	M1	13N	W1	T1				
CBL309	NE WARNING GATE	NORTH MCC	1	14-D-12	M1	13N	W1	T1				
CBL309S	NE WARNING GATE	NORTH MCC	1	14-D-4	M1	13N	W1	T1				
CBL318	NE WARNING GATE	NORTH MCC	1	10-H-3	M1	13N	W1	T1				
CBL312	CONTROL CONSOLE	NORTH MCC	1	14-D-7	T1							
CBL331	SW WARN GATE DISC - DS331	SOUTH MCC	4	10-B-1	M4	13S	W4	T2				
CBL339	SW WARNING GATE	SOUTH MCC	1	14-D-12	M4	13S	W4	T2				
CBL339S	SW WARNING GATE	SOUTH MCC	1	14-D-4	M4	13S	W4	T2				
CBL348	SW WARNING GATE	SOUTH MCC	1	10-H-3	M4	13S	W4	T2				
CBL342	CONTROL CONSOLE	SOUTH MCC	1	14-D-7	T1	W3	37N	SUB	37S	W6	T2	
CBL401	NW BARRIER GATE DISC - DS401	NORTH MCC	4	10-B-1	M3	13N	W1	T1				
CBL409	NW BARRIER GATE	NORTH MCC	1	14-D-12	M3	13N	W1	T1				
CBL409S	NW BARRIER GATE	NORTH MCC	1	14-D-4	M3	13N	W1	T1				
CBL420	NW BARRIER GATE	NORTH MCC	1	10-H-3	M3	13N	W1	T1				
CBL411	CONTROL CONSOLE	NORTH MCC	1	14-D-7	T1							
CBL431	SE BARRIER GATE DISC - DS431	SOUTH MCC	4	10-B-1	M5	13S	W4	T2				
CBL439	SE BARRIER GATE	SOUTH MCC	1	14-D-12	M5	13S	W4	T2				
CBL439S	SE BARRIER GATE	SOUTH MCC	1	14-D-4	M5	13S	W4	T2				
CBL450	SE BARRIER GATE	SOUTH MCC	5	10-B-1	M5	13S	W4	T2				
CBL441	CONTROL CONSOLE	SOUTH MCC	1	14-D-7	T1	W3	37N	SUB	37S	W6	T2	
CBL501	NE BARRIER GATE DISC - DS501	NORTH MCC	4	10-B-1	M1	13N	W1	T1				
CBL509	NE BARRIER GATE	NORTH MCC	1	14-D-12	M1	13N	W1	T1				
CBL509S	NE BARRIER GATE	NORTH MCC	1	14-D-4	M1	13N	W1	T1				
CBL520	NE BARRIER GATE	NORTH MCC	5	10-B-1	M1	13N	W1	T1				
CBL511	CONTROL CONSOLE	NORTH MCC	1	14-D1-1	T1							
CBL531	SW BARRIER GATE DISC - DS531	SOUTH MCC	4	10-B-1	M4	13S	W4	T2				
CBL539	SW BARRIER GATE	SOUTH MCC	1	14-D-12	M4	13S	W4	T2				
CBL539S	SW BARRIER GATE	SOUTH MCC	1	14-D-4	M4	13S	W4	T2				
CBL550	SW BARRIER GATE	SOUTH MCC	5	10-B-1	M4	13S	W4	T2				
CBL541	CONTROL CONSOLE	SOUTH MCC	1	14-D-7	T1	W3	37N	SUB	37S	W6	T2	
CBL631	NE TOE LOCK DISC - DS631	NORTH MCC	4	10-B-1	R44	11	DROOP	11	R24	13N	W1	T1
CBL631A	NE TOE LOCK DISC - DS631	NE TOE LOCK MOTOR	4	10-B-1	R43							
CBL639	NE TOE LOCK LIMIT SWITCHES	NORTH MCC	1	14-D-12	R95	11	DROOP	11	R24	13N	W1	T1
CBL639S	NE TOE LOCK LIMIT SWITCHES	NORTH MCC	1	14-D-4	R95	11	DROOP	11	R24	13N	W1	T1
CBL661	NW TOE LOCK DISC - DS661	NORTH MCC	4	10-B-1	R47	11	DROOP	11	R40	13N	W1	T1

* INDICATES SPARE CABLE

NOTES:

1. LIGHTING, HVAC, INTERCOM, FIRE ALARM, TELEPHONE, AND NON-CONTROL SYSTEM WIRING ARE NOT SHOWN IN THE CIRCUIT SCHEDULES. CONDUIT FROM PRIMARY SERVICE EQUIPMENT TO UTILITY TRANSFORMER PAD ARE NOT SHOWN.
2. UNLESS OTHERWISE NOTED, CONTRACTOR SHALL NOT UTILIZE BRIDGE CONTROL SYSTEM RACEWAYS (RACEWAYS LABELED AND CALLED-OUT IN THE PLANS) FOR ANY LIGHTING, HVAC, INTERCOM, FIRE ALARM, OR TELEPHONE WIRING. CONTRACTOR SHALL FURNISH AND INSTALL RACEWAYS FOR THESE SYSTEMS AS CALLED OUT IN THE SPECIFICATIONS AND ELSEWHERE IN THE PLANS.
3. CABLES DESIGNATED AS "BY MANUF." ARE SPECIAL COMMUNICATIONS CABLES, AND SHALL BE AS RECOMMENDED BY THE MANUFACTURER.
4. SUB INDICATES ROUTING THROUGH THE SUBMARINE CABLES.
5. DRPNE, DRPNW, DRPSE, AND DRPSW INDICATE ROUTING THROUGH THE NORTHEAST, NORTHWEST, SOUTHEAST AND SOUTHWEST DROOP CABLES, RESPECTIVELY.
6. 11NEA, 11NWA, 11SEA, AND 11SWA INDICATE ROUTING THROUGH THE NORTHEAST, NORTHWEST, SOUTHEAST AND SOUTHWEST STATIONARY DROOP CABLE BOXES RESPECTIVELY.
7. 11NEB, 11NWB, 11SEB, AND 11SWB INDICATE ROUTING THROUGH THE NORTHEAST, NORTHWEST, SOUTHEAST AND SOUTHWEST MOVABLE SPAN MOUNTED DROOP CABLE BOXES RESPECTIVELY.
8. 13N AND 13S INDICATE ROUTING THROUGH THE NORTH AND SOUTH FIELD WIRING TERMINAL CABINETS RESPECTIVELY.
9. 37N AND 37S INDICATE ROUTING THROUGH THE NORTH AND SOUTH SUBMARINE CABLE CABINETS RESPECTIVELY.
10. CABLE SPECIFICATION CODES IN THE SCHEDULES (SUCH AS 350-B-1) SHOW THREE FIELDS. THE FIRST FIELD INDICATES THE CABLE SIZE IN AWG. THE SECOND FIELD IS A LETTER CODE WHICH CORRESPONDS WITH THE CABLE SPECIFICATIONS SHOWN IN THE SPECIAL PROVISIONS. THE THIRD FIELD INDICATES THE QUANTITY OF CONDUCTORS WITHIN THE CABLE.
11. CIRCUIT DESIGNATIONS WILL TYPICALLY CORRESPOND WITH THE CABLE DESIGNATION CALLED OUT IN THE SCHEMATIC DRAWINGS. THE SCHEMATIC DRAWINGS PREFIX ALL CIRCUIT DESIGNATIONS WITH "CBL." THE "CBL" PREFIX HAS BEEN DROPPED IN THE SCHEDULES.
12. RACEWAY CODES, OTHER THAN THOSE DESCRIBED IN THESE NOTES, WILL BE PREFIXED WITH THE LETTERS "T" FOR CABLE TRAY, "R" FOR (TYPICALLY) CONDUIT, AND "W" FOR WIREWAY. RACEWAYS M1, M2, M3, M4 AND M5ARE MESSENGER CABLE RACEWAYS.

CABLE DESIGNATION

CBL136
- 36 DENOTES SCHEMATIC LINE NUMBER
- 1 DENOTES SCHEMATIC NUMBER
- CBL DENOTES CONTROL CIRCUIT

SPEC DESIGNATION

12-D-7
- NUMBER OF CONDUCTORS IN EACH CABLE
- CABLE SPECIFICATION
- WIRE GAUGE (AWG)

RACEWAY DESIGNATION

R13
- RACEWAY NUMBER
- R - CONDUIT
  T - TRAY
  W - WIREWAY
  M - MESSENGER CABLE SYSTEM

PROJECT NO. B-2532

CRAVEN COUNTY

STATION: 31+21.29 -L-

NORTH CAROLINA PROFESSIONAL ENGINEER SEAL 031843 GREGORY S. BARON

STATE OF NORTH CAROLINA
DEPARTMENT OF TRANSPORTATION
RALEIGH, NC

BRIDGE CONTROL SYSTEM
CABLE SCHEDULE 1

HNTB NORTH CAROLINA, P.C.
343 E. Six Forks Rd., Suite 200, Raleigh, N.C. 27609

DRAWN BY WL DATE 9/26/06
CHECKED BY MS DATE 9/26/06
DWG. NO. E-83

REVISIONS					
NO.	BY	DATE	NO.	BY	DATE
1			3		
2			4		

SHEET NO. S-344
TOTAL SHEETS 348

fgolrcelaya AT FFLD103
03-OCT-2006 15:01
U:\FF42673e1\Working Files for 100% submittal\B2532_EL_E83 Cable Sch1.dgn

CIRCUIT	FROM	TO	NO.	SPEC	RACEWAY ROUTING						
CBL661A	NW TOE LOCK DISC - DS661	NW TOE LOCK MOTOR	4	10-B-1	R49						
CBL669	NW TOE LOCK LIMIT SWITCHES	NORTH MCC	1	14-D-12	R93	11	DROOP	11	R40	13N	W1	T1
CBL669S	NW TOE LOCK LIMIT SWITCHES	NORTH MCC	1	14-D-4	R93	11	DROOP	11	R40	13N	W1	T1
CBL731	NE HEEL LOCK DISC - DS731	NORTH MCC	4	10-B-1	R45	11	DROOP	11	R24	13N	W1	T1
CBL731A	NE HEEL LOCK DISC - DS731	NE HEEL LOCK MOTOR	4	10-B-1	R46							
CBL739	NE HEEL LOCK LIMIT SWITCHES	NORTH MCC	1	14-D-12	R96	11	DROOP	11	R24	13N	W1	T1
CBL739S	NE HEEL LOCK LIMIT SWITCHES	NORTH MCC	1	14-D-4	R96	11	DROOP	11	R24	13N	W1	T1
CBL761	NW HEEL LOCK DISC - DS761	NORTH MCC	4	10-B-1	R48	11	DROOP	11	R40	13N	W1	T1
CBL761A	NW HEEL LOCK DISC - DS761	NW HEEL LOCK MOTOR	4	10-B-1	R50							
CBL769	NW HEEL LOCK LIMIT SWITCHES	NORTH MCC	1	14-D-12	R94	11	DROOP	11	R40	13N	W1	T1
CBL769S	NW HEEL LOCK LIMIT SWITCHES	NORTH MCC	1	14-D-4	R94	11	DROOP	11	R40	13N	W1	T1
CBL831	SE HEEL LOCK DISC - DS831	SOUTH MCC	4	10-B-1	R54	11	DROOP	11	R58	13S	W4	T2
CBL831A	SE HEEL LOCK DISC - DS831	SE HEEL LOCK MOTOR	4	10-B-1	R53							
CBL839	SE HEEL LOCK LIMIT SWITCHES	SOUTH MCC	1	14-D-12	R91	11	DROOP	11	R58	13S	W4	T2
CBL839S	SE HEEL LOCK LIMIT SWITCHES	SOUTH MCC	1	14-D-4	R91	11	DROOP	11	R58	13S	W4	T2
CBL861	SW HEEL LOCK DISC - DS861	SOUTH MCC	4	10-B-1	R55	11	DROOP	11	R74	13S	W4	T2
CBL861A	SW HEEL LOCK DISC - DS861	SW HEEL LOCK MOTOR	4	10-B-1	R56							
CBL869	SW HEEL LOCK LIMIT SWITCHES	SOUTH MCC	1	14-D-12	R92	11	DROOP	11	R74	13S	W4	T2
CBL869S	SW HEEL LOCK LIMIT SWITCHES	SOUTH MCC	1	14-D-4	R92	11	DROOP	11	R74	13S	W4	T2
CBL931	NE MACH BRAKE DISC - DS931	NORTH MCC	4	10-B-1	R25	13N	W1	T1				
CBL931A	NE MACH BRAKE DISC - DS931	NE MACH BRAKE MOTOR	4	10-B-1	R28							
CBL942	NE MACH BRAKE LIMIT SWITCHES	NORTH MCC	1	14-D-12	R97	13N	W1	T1				
CBL946	NW MACH BRAKE DISC - DS946	NORTH MCC	4	10-B-1	R39	13N	W1	T1				
CBL946A	NW MACH BRAKE DISC - DS946	NW MACH BRAKE MOTOR	4	10-B-1	R36							
CBL957	NW MACH BRAKE LIMIT SWITCHES	NORTH MCC	1	14-D-12	R98	13N	W1	T1				
CBL961	NORTH MOTOR BRAKE DISC - DS961	NORTH MCC	4	10-B-1	R27	13N	W1	T1				
CBL961A	NORTH MOTOR BRAKE DISC - DS961	NORTH MOTOR BRAKE MOTOR	4	10-B-1	R31							
CBL972	N MOTOR BRAKE LIMIT SWITCHES	NORTH MCC	1	14-D-12	R99	13N	W1	T1				
CBL1031	SE MACH BRAKE DISC - DS1031	SOUTH MCC	4	10-B-1	R59	13S	W4	T2				
CBL1031A	SE MACH BRAKE DISC - DS1031	SE MACH BRAKE MOTOR	4	10-B-1	R62							
CBL1042	SE MACH BRAKE LIMIT SWITCHES	SOUTH MCC	1	14-D-12	R100	13S	W4	T2				
CBL1046	SW MACH BRAKE DISC - DS1046	SOUTH MCC	4	10-B-1	R73	13S	W4	T2				
CBL1046A	SW MACH BRAKE DISC - DS1046	SW MACH BRAKE MOTOR	4	10-B-1	R70							
CBL1057	SW MACH BRAKE LIMIT SWITCHES	SOUTH MCC	12		R101	13S	W4	T2				
CBL1061	S MOTOR BRAKE DISC - DS1061	SOUTH MCC	4	10-B-1	R71	13S	W4	T2				
CBL1061A	S MOTOR BRAKE DISC - DS1061	S MOTOR BRAKE MOTOR	4	10-B-1	R67							

CIRCUIT	FROM	TO	NO.	SPEC	RACEWAY ROUTING						
CBL1072	S MOTOR BRAKE LIMIT SWITCHES	SOUTH MCC	1	14-D-12	R102	13S	W4	T2				
CBL1101	CONTROL CONSOLE - AM1101	NORTH MCC - CT'S	1	14-D-4	T1							
CBL1104	N AUXILIARY MOTOR DISC - DS1104	NORTH MCC	4	8-B-1	R38	13N	W1	T1				
CBL1104A	N AUXILIARY MOTOR DISC - DS1104	N AUXILIARY MOTOR	4	8-B-1	R37							
CBL1108	N AUXILIARY MOTOR DISC - DS1104	NORTH MCC	4	8-B-1	R38	13N	W1	T1				
CBL1108A	N AUXILIARY MOTOR DISC - DS1104	N AUXILIARY MOTOR	4	8-B-1	R37							
CBL1108B	N AUX MOTOR CLUTCH RECTIFIER	NORTH MCC	1	10-H-3	R35	13N	W1	T1				
CBL1108C	N AUX MOTOR CLUTCH RECTIFIER	N AUX MOTOR CLUTCH	1	10-H-3	R34							
CBL1109	N AUX MTR HAND CRANK LIMIT SW'S	NORTH MCC	1	14-D-4	R103	13N	W1	T1				
CBL1131	CONTROL CONSOLE - AM1131	NORTH MCC - CT'S	1	14-D-4	T1							
CBL1134	S AUX MOTOR DISC - DS1134	SOUTH MCC	4	8-B-1	R60	13S	W4	T2				
CBL1134A	S AUX MOTOR DISC - DS1134	S AUX MOTOR	4	8-B-1	R61							
CBL1138	S AUX MOTOR DISC - DS1138	SOUTH MCC	4	8-B-1	R60	13S	W4	T2				
CBL1138A	S AUX MOTOR DISC - DS1138	S AUX MOTOR	4	8-B-1	R61							
CBL1138B	S AUX MOTOR CLUTCH RECTIFIER	SOUTH MCC	1	10-H-3	R63	13S	W4	T2				
CBL1138C	S AUX MOTOR CLUTCH RECTIFIER	S AUX MOTOR CLUTCH	1	10-H-3	R64							
CBL1139	S AUX MTR HAND CRANK LIMIT SW'S		1	14-D-4	R104	13S	W4	T2				
CBL1201	N DRIVE ISOLATION TRANSFORMER	NORTH MCC	4	2-B-1	R15	T1						
CBL1201A	N DRIVE ISOLATION TRANSFORMER	NORTH SPAN DRIVE	4	2-B-1	R14							
CBL1204	CONTROL CONSOLE	NORTH SPAN DRIVE	1	14-D-7	T1	R13						
CBL1210	N DRIVE TACHOMETER	NORTH SPAN DRIVE	1	14-D-4	R29	13N	W1	T1	R12			
CBL1211	NORTH MCC	NORTH SPAN DRIVE	1	14-D-12	T1	R13						
CBL1211S	NORTH MCC	NORTH SPAN DRIVE	1	14-D-4	T1	R13						
CBL1218	N SPAN MOTOR DISC - DS1220	NORTH SPAN DRIVE	6	2-B-1	R26	13N	W1	T1	R11			
CBL1218A	N SPAN MOTOR DISC - DS1220	NORTH SPAN DRIVE MOTOR	6	2-B-1	R30							
CBL1223	NORTH MCC	NORTH SPAN DRIVE	1	14-D-12	T1	R13						
CBL1231	S DRIVE ISOLATION TRANSFORMER	SOUTH MCC	4	2-B-1	R78	T2						
CBL1231A	S DRIVE ISOLATION TRANSFORMER	SOUTH SPAN DRIVE	4	2-B-1	R79							
CBL1234	CONTROL CONSOLE	SOUTH SPAN DRIVE	1	14-D-7	T1	W3	37N	SUB	37S	W6	T2	
CBL1240	SOUTH DRIVE TACHOMETER	SOUTH SPAN DRIVE	1	14-D-4	R69	13S	W4	T2	R81			
CBL1241	SOUTH MCC	SOUTH SPAN DRIVE	1	14-D-12	T2	R80						
CBL1241S	SOUTH MCC	SOUTH SPAN DRIVE	1	14-D-4	T2	R80						
CBL1248	S DRIVE MOTOR DISC - DS1250	SOUTH SPAN DRIVE	6	2-B-1	R92	13S	W4	T2	R82			
CBL1248A	S DRIVE MOTOR DISC - DS1250	SOUTH SPAN DRIVE MOTOR	6	2-B-1	R68							
CBL1253	SOUTH MCC	SOUTH SPAN DRIVE	1	14-D-12	T2	R80						
CBL1253S	SOUTH MCC	SOUTH SPAN DRIVE	1	14-D-4	T2	R80						

NOTE:

1. FOR CABLE SCHEDULE NOTES, SEE DWG. NO. E-83.

PROJECT NO. B-2532

CRAVEN COUNTY

STATION: 31+21.29 -L-

NORTH CAROLINA PROFESSIONAL SEAL 031843 ENGINEER GREGORY S. BARON

STATE OF NORTH CAROLINA
DEPARTMENT OF TRANSPORTATION
RALEIGH, NC

BRIDGE CONTROL SYSTEM
CABLE SCHEDULE 2

HNTB HNTB NORTH CAROLINA, P.C.
343 E. Six Forks Rd., Suite 200, Raleigh, N.C. 27609

DRAWN BY WL DATE 9/26/06
CHECKED BY MS DATE 9/26/06
DWG. NO. E-84

REVISIONS						SHEET NO.
NO.	BY	DATE	NO.	BY	DATE	S-345
1			3			TOTAL SHEETS
2			4			348

fgoldman AT FFLD103
03-07-2006 15:02
U:\FF4057\e1\Working Files for 100% submittal\B2532_FL_E84 Cable Sch2.dgn

CIRCUIT	FROM	TO		NO.	SPEC	RACEWAY ROUTING						
CBL1320	CONTROL CONSOLE - SPAN CONTROL	NORTH MCC	1	14-D-7	T1							
CBL1322	CONTROL CONSOLE - SPAN CONTROL	SOUTH MCC	1	14-D-7	T1	W3	37N	SUB	37S	W6	T2	
CBL1333	CONTROL CONSOLE - SPAN CONTROL	SOUTH MCC	1	14-D-12	T1	W3	37N	SUB	37S	W6	T2	
CBL1336	CONTROL CONSOLE - SPAN CONTROL	NORTH MCC	1	14-D-12	T1							
CBL1348	CONTROL CONSOLE - SPAN CONTROL	SOUTH MCC	1	14-D-12	T1	W3	37N	SUB	37S	W6	T2	
CBL1349	CONTROL CONSOLE - SPAN CONTROL	NORTH MCC	1	14-D-12	T1							
CBL1364	CONTROL CONSOLE - SPAN CONTROL	NORTH MCC	1	14-D-12	T1							
CBL1364S	CONTROL CONSOLE - SPAN CONTROL	NORTH MCC	1	14-D-4	T1							
CBL1365	CONTROL CONSOLE - SPAN CONTROL	SOUTH MCC	1	14-D-12	T1	W3	37N	SUB	37S	W6	T2	
CBL1365S	CONTROL CONSOLE - SPAN CONTROL	SOUTH MCC	1	14-D-4	T1	W3	37N	SUB	37S	W6	T2	
CBL1401	N LEAF ROTARY CAM LIMIT SWITCH	NORTH MCC	1	14-D-12	R23	13N	W1	T1				
CBL1406	N LEAF ROTARY CAM LIMIT SWITCH	NORTH MCC	1	14-D-12	R23	13N	W1	T1				
CBL1406S	N LEAF ROTARY CAM LIMIT SWITCH	NORTH MCC	1	14-D-4	R23	13N	W1	T1				
CBL1417	N LEAF ROTARY CAM LIMIT SWITCH	NORTH MCC	1	14-D-12	R23	13N	W1	T1				
CBL1433	N LEAF ROATARY CLS RESOLVER	NORTH MCC	1	8 COND SHLD	R23	13N	W1	T1				
CBL1433A	CONTROL CONSOLE - MT1433	NORTH MCC	1	8 COND SHLD	T1							
CBL1501	S LEAF ROTARY CAM LIMIT SWITCH	SOUTH MCC	1	14-D-12	R75	13S	W4	T2				
CBL1506	S LEAF ROTARY CAM LIMIT SWITCH	SOUTH MCC	1	14-D-12	R75	13S	W4	T2				
CBL1506S	S LEAF ROTARY CAM LIMIT SWITCH	SOUTH MCC	1	14-D-4	R75	13S	W4	T2				
CBL1517	S LEAF ROTARY CAM LIMIT SWITCH	SOUTH MCC	1	14-D-12	R75	13S	W4	T2				
CBL1533	S LEAF ROTARY CLS RESOLVER	SOUTH MCC	1	8 COND SHLD	R75	13S	W4	T2				
CBL1533A	CONTROL CONSOLE - MT1533	SOUTH MCC	1	8 COND SHLD	T1	W3	37N	SUB	37S	W6	T2	
CBL1601	CONTROL CONSOLE	PHOTOCELL	1	14-D-4	T1	R4						
CBL1602	CONTROL CONSOLE	NORTH MCC	1	14-D-4	T1							
CBL1603	CONTROL CONSOLE	SOUTH MCC	1	14-D-4	T1	W3	37N	SUB	37S	W6	T2	
CBL1609	N FENDER NAV LIGHTS	NORTH MCC	1	10-D-4	R33	13N	W1	T1				
CBL1615	N LEAF ROTARY CAM LIMIT SWITCH	NORTH MCC	1	14-D-4	R23	13N	W1	T1				
CBL1613	NE CHANNEL NAV LIGHTS	NORTH MCC	1	10-D-8	R42	11	DROOP	11	R24	13N	W1	T1
CBL1613B	NW CHANNEL NAV LIGHTS	NORTH MCC	1	10-D-8	R51	11	DROOP	11	R40	13N	W1	T1
CBL1639	S FENDER NAV LIGHTS	SOUTH MCC	1	10-D-4	R65	13S	W4	T2				
CBL1645	S LEAF ROTARY CAM LIMIT SWITCH	SOUTH MCC	4		R75	13S	W4	T2				
CBL1643	SE CHANNEL NAV LIGHTS	SOUTH MCC	1	10-D-8	R52	11	DROOP	11	R58	13S	W4	T2
CBL1643B	SW CHANNEL NAV LIGHTS	SOUTH MCC	1	10-D-8	R57	11	DROOP	11	R74	13S	W4	T2
CBL1661	NORTH MCC	NE ROADWAY LIGHTING	4	SEE NOTE 2	T1	W1	13N	M1				
CBL1663	NORTH MCC	NW ROADWAY LIGHTING	4	SEE NOTE 2	T1	W1	13N	M3				
CBL1664	SOUTH MCC	SE ROADWAY LIGHTING	4	SEE NOTE 2	T2	W4	13S	M5				

CIRCUIT	FROM	TO		NO.	SPEC	RACEWAY ROUTING						
CBL1666	SOUTH MCC	SW ROADWAY LIGHTING	4	SEE NOTE 2	T2	W4	13S	M4				
CBL1705	CONTROL CONSOLE - SIG CONTROL	NORTH MCC	1	10-D-12	T1							
CBL1705S	CONTROL CONSOLE - SIG CONTROL	NORTH MCC	1	10-D-4	T1							
CBL1706	CONTROL CONSOLE - SIG CONTROL	SOUTH MCC	1	10-D-12	T1	W3	37N	SUB	37S	W6	T2	
CBL1731	CONTROL CONSOLE - SIGN FLASHER	NORTH MCC	4	10-B-1	T1							
CBL1731A	NORTH DRAWBRIDGE AHEAD SIGN	NORTH MCC	4	10-B-1	T1	W1	13N	M3				
CBL1732	CONTROL CONSOLE - SIGN FLASHER	SOUTH MCC	4	10-B-1	T1	W3	37N	SUB	37S	W6	T2	
CBL1732A	SOUTH DRAWBRIDGE AHEAD SIGN	SOUTH MCC	4	10-B-1	T2	W4	13S	M5				
CBL1761	N GONG ABE1761 @ NW WARN GATE	NORTH MCC	1	10-H-3	M3	13N	W1	T1				
CBL1762	S GONG ABE1762 @ SE WARN GATE	SOUTH MCC	1	10-H-3	M5	13S	W4	T2				
CBL1763	AIR HORN - ABE1763	NORTH MCC	1	10-H-3	R17	T1						
CBL1715	N TRAFFIC SIGNAL	NORTH MCC	2	10-D-4	T1	W1	13N	M3				
CBL1716	S TRAFFIC SIGNAL	NORTH MCC	2	10-D-4	T2	W4	13S	M5				
PHONE	TELEPHONE CONNECTION	SERVICE EQPT										
CBL1717	NORTH MCC	NE FULL SEAT LS	1	10-D-4	T1	W1	13N	R107				
CBL1718	SOUTH MCC	NW FULL SEAT LS	1	10-D-4	T1	W1	13N	R108				
CBL1719	NORTH MCC	SE FULL SEAT LS	1	10-D-4	T2	W4	13S	R109				
CBL1720	SOUTH MCC	SW FULL SEAT LS	1	10-D-4	T2	W4	13S	R110				

NOTE:

1. FOR CABLE SCHEDULE NOTES, SEE DWG. NO. E-83.

PROJECT NO. B-2532

CRAVEN COUNTY

STATION: 31+21.29 -L-

NORTH CAROLINA PROFESSIONAL SEAL 031843 ENGINEER GREGORY S. BARON

STATE OF NORTH CAROLINA
DEPARTMENT OF TRANSPORTATION
RALEIGH, NC

BRIDGE CONTROL SYSTEM CABLE SCHEDULE 3

HNTB HNTB NORTH CAROLINA, P.C.
343 E. Six Forks Rd., Suite 200, Raleigh, N.C. 27609

DRAWN BY WL DATE 9/26/06
CHECKED BY MS DATE 9/26/06
DWG. NO. E-85

REVISIONS						SHEET NO.
NO.	BY	DATE	NO.	BY	DATE	S-346
1			3			TOTAL SHEETS
2			4			348

fgoforbeign AT FFLD103
03-OCT-2006 15:04
U:\AF-H957a\Working Files for 100% submittal\B2532_FL_E85 Cable Sch3.dgn

RACEWAY	TYPE	SIZE (IN)	CIRCUITS WITHIN RACEWAY							
11NEA	BOX		1613	1613B	631	639S	731	739	739S	
11NEB	BOX									
11NWA	BOX		661	669	669S	761	769	769S		
11NWB	BOX									
11SEA	BOX		1643	831	839	839S				
11SEB	BOX									
11SWA	BOX		1643B	861	869	869S				
11SWB	BOX									
13N	BOX		1104	1108	1108B	1109	1210	1218	1401	
			1406S	1417	1433	1609	1613	1613B	1615	
			1663	1731A	1761	201	209	209S	212	
			301	309	309S	318	401	409	409S	
			501	509	509S	520	631	639	639S	
			669	669S	731	739	739S	761	769	
			931	931A	942	946	957	961	972	
13S	BOX		1031	1042	1046	1057	1061	1072	1134	1406
			1138B	1139	1240	1248	1501	1506	1506S	1661
			1533	1639	1643	1643B	1645	1664	1666	218
			1762	231	239	239S	248	331	339	420
			348	431	439	439S	441	450	531	661
			539S	550	831	839	839S	861	869	769S
37N	BOX		005	1234	1322	1333	1348	1365	1365S	
			1706	1732	242	342	541			1138
37S	BOX		005	1234	1322	1333	1348	1365	1365S	1517
			1706	1732	242	342	541			1732A
DRP-NE	DROOP		1613	1613B	631	639	639S	731	739	339S
DRP-NW	DROOP		661	669	669S	761	769	769S		539
DRP-SE	DROOP		1643	831	839	839S				869S
DRP-SW	DROOP		1643B	861	869	869S				1603
M1	MESSGR		001	1661	301	309	309S	318	501	
			509S	520						1603
M2	MESSGR		PHONE							
R100	FRE	1.5	1042							739S
R101	FRE	1.5	1057							
R102	FRE	1.5	1072							
R103	FRE	1	1109							
R104	FRE	1	1139							509
R11	FRE	2	1218							
R12	FRE	1	1210							
R13	FRE	1.5	1223	1204						
R14	FRE	1.5	1201A							
R1	FRE	2-5	000							
R2	FRE	2	PHONE							
R3	FRE	2-5	000A							

RACEWAY	TYPE	SIZE (IN)	CIRCUITS WITHIN RACEWAY							
R15	FRE	1.5	1201							
R16	FRE	1	011							
R16A	FRE	1	006							
R17	FRE	1	1763							
R18	FRE	3	003							
R19	FRE	1	003B							
R20	FRE	3	002							
R21	FRE	4	010	014B						
R23	FRE	3	1401	1406	1406S	1417	1433	1615		
R24	FRE	3	1613	1613B	631	639	639S	731	739	
R25	FRE	1	931							
R26	FRE	2	1218							
R27	FRE	1	961							
R28	FRE	4	931A							
R29	FRE	1	1210							
M3	MESSGR		1663	1713A	1761	201	209	209S	212	
			401	409	409S	420				739S
R30	FRE	2	1218A							
R31	FRE	1	961A							
R33	FRE	1	1609							
R34	FRE	1	1108C							
R35	FRE	1	1108B							
R36	FRE	1	946A							218
R37	FRE	1.25	11404A	1108A						
R38	FRE	1.25	1104	1108						
R39	FRE	1	946							
R4	FRE	3	1601							
R40	FRE	4	661	669	669S	761	769	769S		
R42	FRE	2	1613	1613B						
R43	FRE	1	631A							
R44	FRE	1	631							
R45	FRE	1	731							
R46	FRE	1	731A							
R47	FRE	1	661							
R48	FRE	1	761							
R49	FRE	1	661A							
R5	FRE	4	014							
R50	FRE	1	761A							
R52	FRE	1.25	1643							
R53	FRE	1	831A							
R54	FRE	1	831							

NOTE:

1. FOR CABLE SCHEDULE NOTES, SEE DWG. NO. E-83.

PROJECT NO. B-2532

CRAVEN COUNTY

STATION: 31+21.29 -L-

STATE OF NORTH CAROLINA
DEPARTMENT OF TRANSPORTATION
RALEIGH, NC

BRIDGE CONTROL SYSTEM RACEWAY SCHEDULE 1

NORTH CAROLINA PROFESSIONAL SEAL 031843 ENGINEER GREGORY S. BARON

HNTB HNTB NORTH CAROLINA, P.C.
343 E. Six Forks Rd., Suite 200, Raleigh, N.C. 27609

DRAWN BY WL DATE 10/20/06
CHECKED BY MS DATE 10/20/06
DWG. NO. E-86

REVISIONS						SHEET NO.
NO.	BY	DATE	NO.	BY	DATE	S-349
1			3			TOTAL SHEETS
2			4			348

jbarman AT FFLD126
19-OCT-2006 13:40
u:\rdc\b2532\working Files for 100% submittal\B2532_FL_E86_Raceway Sch1.dgn

RACEWAY	TYPE	SIZE (IN)	CIRCUITS WITHIN RACEWAY							
R55	FRE	1	861							
R56	FRE	1	861A							
R57	FRE	1.25	1643B							
R58	FRE	3	1643	1643B	831	839	839S			
R59	FRE	1	1031							
R6	FRE	4	004							
R60	FRE	1.25	1134	1138						
R61	FRE	1.25	1134A	1138A						
R62	FRE	1	1031A							
R63	FRE	1	1138B							
R64	FRE	1	1138C							
R65	FRE	1	1639							
R67	FRE	1	1061A							
R68	FRE	2	1248A							
R69	FRE	1	1240							
R70	FRE	1	1046A							
R71	FRE	1	1061							
R73	FRE	1	1046							
R74	FRE	2	861	869	869S					
R75	FRE	3	1501	1506	1506S	1517	1533	1645		
R78	FRE	1.5	1231							
R79	FRE	1.5	1231A							
R8	FRE	4	009							
R80	FRE	3	1234	1241	1241S	1253	1253S			
R81	FRE	1	1240							
R82	FRE	2	1248							
R83	FRE	1.5	012							
R84	FRE	1.5	013							
R85A	FRE	4	007							
R87	FRE	1	015							
M4	MESSGR		1664	1732A	1762	231	239	239S	248	
			439	439S	441	450				
R9	FRE	4	161							
M5	MESSGR		1666	331	339	339S	348	531	539	
			550							
R91	FRE	2	839	839S						
R92	FRE	3	1248	869	869S					
R93	FRE	2	669	669S						431
R94	FRE	2	769	769S						
R95	FRE	2	639	639S						
R96	FRE	2	739	739S						539S
R97	FRE	2	931A	942						
R98	FRE	1.5	957							
R99	FRE	1.5	972							

RACEWAY	TYPE	SIZE (IN)	CIRCUITS WITHIN RACEWAY							
R100	FRE	2-5	001							
R105	FRE	1.5	014B							
R106	FRE	1.5	015B							
R107	FRE	1	1717							
R108	FRE	1	1718							
R109	FRE	1	1719							
R110	FRE	1	1720							
SUB	SUB		005	1234	1322	1333	1348	1365	1365S	1603
			1706	1732	242	342	541			
T1	TRAY		005	006	016	017	109	1101	1104	1108
			1108B	1109	1131	1201	1204	1210	1211	1211S
			1218	1223	1234	1320	1322	1333	1336	1348
			1349	1364	1364S	1365	1365S	139	1401	1406
			1406S	1417	1433	1433A	1601	1602	1603	1609
			161	1613	1613B	1615	1661	1663	1705	1705S
			1706	1731	1731A	1732	1761	1763	201	209
			209S	212	218	242	301	309	309S	312
			318	342	401	409	409S	411	420	501
			509	509S	511	520	541	631	639	639S
			661	669	669S	731	739	739S	761	769
			769S	931	931A	942	946	957	961	972
T2	TRAY		005	007	1031	1042	1046	1057	1061	1072
			1134	1138	1138B	1139	1231	1234	1240	1241
			1241S	1248	1253	1253S	1322	1333	1348	1365
			1365S	1501	1506	1506S	1517	1533	1533A	1603
			1639	1643	1643B	1645	1664	1666	1706	1732
			1732A	1762	231	239	239S	242	248	331
			339	339S	342	348	431	439	439S	441
			450	531	539	539S	541	550	831	839
			839S	861	869	869S				
W1	WIREWAY		1104	1108	1108B	1109	1210	1218	1401	1406
			1406S	1417	1433	1609	1613	1613B	1615	1661
			1663	1731A	1761	201	209	209S	212	218
			301	309	309S	318	401	409	409S	420
			501	509	509S	520	631	639	639S	661
			669	669S	731	739	739S	761	769	769S
			931	931A	942	946	957	961	972	
W3	WIREWAY		005	017	1234	1322	1333	1348	1365	1365S
			139	1603	1706	1732	242	342	541	
W4	WIREWAY		1031	1042	1046	1057	1061	1072	1134	1138
			1138B	1139	1248	1501	1506	1506S	1517	1533
			1639	1643	1643B	1645	1664	1666	1732A	1762
			231	239	239S	248	331	339	339S	348
			431	439	439S	450	441	531	539	539S
			550	831	839	839S	861	869	869S	
W6	WIREWAY		005	242	342	541	1234	1322	1333	1348
			1365	1365S	1603	1706	1732			

NOTE:

1. FOR CABLE SCHEDULE NOTES, SEE DWG. NO. E-83.

PROJECT NO. B-2532

CRAVEN COUNTY

STATION: 31+21.29 -L-

NORTH CAROLINA PROFESSIONAL SEAL 031843 ENGINEER GREGORY S. BARTON

STATE OF NORTH CAROLINA
DEPARTMENT OF TRANSPORTATION
RALEIGH, NC

BRIDGE CONTROL SYSTEM RACEWAY SCHEDULE 2

HNTB HNTB NORTH CAROLINA, P.C.
343 E. Six Forks Rd., Suite 200, Raleigh, N.C. 27609

DRAWN BY WL DATE 10/20/06
CHECKED BY MS DATE 10/20/06

DWG. NO. E-87

REVISIONS						SHEET NO.
NO.	BY	DATE	NO.	BY	DATE	S-343
1			3			TOTAL SHEETS
2			4			348

Jsherman AT FFLD186
10-20-2006 13:29
I:\PROJECTS\Working Files for 100% submittal\B2532_FI_E87 Raceway Sch2.dgn

STANDARD NOTES

DESIGN DATA:

SPECIFICATIONS	A.A.S.H.T.O. (CURRENT)
LIVE LOAD	SEE PLANS
IMPACT ALLOWANCE	SEE A.A.S.H.T.O.
STRESS IN EXTREME FIBER OF	
STRUCTURAL STEEL - AASHTO M270 GRADE 36	20,000 LBS. PER SQ. IN.
- AASHTO M270 GRADE 50W	27,000 LBS. PER SQ. IN.
- AASHTO M270 GRADE 50	27,000 LBS. PER SQ. IN.
REINFORCING STEEL IN TENSION	
GRADE 60	24,000 LBS. PER SQ. IN.
CONCRETE IN COMPRESSION	1,200 LBS. PER SQ. IN.
CONCRETE IN SHEAR	SEE A.A.S.H.T.O.
STRUCTURAL TIMBER - TREATED OR	
UNTREATED - EXTREME FIBER STRESS	1,800 LBS. PER SQ. IN.
COMPRESSION PERPENDICULAR TO GRAIN OF TIMBER	375 LBS. PER SQ. IN.
EQUIVALENT FLUID PRESSURE OF EARTH	30 LBS. PER CU. FT. (MINIMUM)

MATERIAL AND WORKMANSHIP:

EXCEPT AS MAY OTHERWISE BE SPECIFIED ON PLANS OR IN THE SPECIAL PROVISIONS, ALL MATERIAL AND WORKMANSHIP SHALL BE IN ACCORDANCE WITH THE 2002 STANDARD SPECIFICATIONS "FOR ROADS AND STRUCTURES" OF THE N. C. DEPARTMENT OF TRANSPORTATION.

STEEL SHEET PILING FOR PERMANENT OR TEMPORARY APPLICATIONS SHALL BE HOT ROLLED.

CONCRETE:

UNLESS OTHERWISE REQUIRED ON PLANS, CLASS A CONCRETE SHALL BE USED FOR ALL PORTIONS OF ALL STRUCTURES WITH THE EXCEPTION THAT: CLASS AA CONCRETE SHALL BE USED IN BRIDGE SUPERSTRUCTURES, ABUTMENT BACKWALLS, AND APPROACH SLABS; CLASS B CONCRETE SHALL BE USED FOR SLOPE PROTECTION AND RIP RAP; AND CLASS S SHALL BE USED FOR UNDERWATER FOOTING SEALS.

CONCRETE CHAMFERS:

UNLESS OTHERWISE NOTED ON THE PLANS, ALL EXPOSED CORNERS ON STRUCTURES SHALL BE CHAMFERED 3/4" WITH THE FOLLOWING EXCEPTIONS: TOP CORNERS OF CURBS MAY BE ROUNDED TO 1-1/2" RADIUS WHICH IS BUILT INTO CURB FORMS; CORNERS OF TRANSVERSE FLOOR EXPANSION JOINTS SHALL BE ROUNDED WITH A 1/4" FINISHING TOOL UNLESS OTHERWISE REQUIRED ON PLANS; AND CORNERS OF EXPANSION JOINTS IN THE ROADWAY FACES AND TOPS OF CURBS AND SIDEWALKS SHALL BE ROUNDED TO A 1/4" RADIUS WITH A FINISHING STONE OR TOOL UNLESS OTHERWISE REQUIRED ON PLANS.

DOWELS:

DOWELS WHEN INDICATED ON PLANS AS FOR CULVERT EXTENSIONS, SHALL BE EMBEDDED AT LEAST 12" INTO THE OLD CONCRETE AND GROUTED INTO PLACE WITH 1:2 CEMENT MORTAR.

ALLOWANCE FOR DEAD LOAD DEFLECTION, SETTLEMENT, ETC. IN CASTING SUPERSTRUCTURES:

BRIDGES SHALL BE BUILT ON THE GRADE OR VERTICAL CURVE SHOWN ON PLANS. SLABS, CURBS AND PARAPETS SHALL CONFORM TO THE GRADE OR CURVE.

ALL DIMENSIONS WHICH ARE GIVEN IN SECTION AND ARE AFFECTED BY DEAD LOAD DEFLECTIONS ARE DIMENSIONS AT CENTER LINE OF BEARING UNLESS OTHERWISE NOTED ON PLANS. IN SETTING FORMS FOR STEEL BEAM BRIDGES AND PRESTRESSED CONCRETE GIRDER BRIDGES, ADJUSTMENTS SHALL BE MADE DUE TO THE DEAD LOAD DEFLECTIONS FOR THE ELEVATIONS SHOWN. WHERE BLOCKS ARE SHOWN OVER BEAMS FOR BUILDING UP TO THE SLAB, THE VERTICAL DIMENSIONS OF THE BLOCKS SHALL BE ADJUSTED BETWEEN BEARINGS TO COMPENSATE FOR DEAD LOAD DEFLECTIONS, VERTICAL CURVE ORDINATE, AND ACTUAL BEAM CAMBER. WHERE BOTTOM OF SLAB IS IN LINE WITH BOTTOM OF TOP FLANGES, DEPTH OF SLAB BETWEEN BEARINGS SHALL BE ADJUSTED TO COMPENSATE FOR DEAD LOAD DEFLECTION, VERTICAL CURVE ORDINATE, AND ACTUAL BEAM CAMBER.

IN SETTING FALSEWORK AND FORMS FOR REINFORCED CONCRETE SPANS, AN ALLOWANCE SHALL BE MADE FOR DEAD LOAD DEFLECTIONS, SETTLEMENT OF FALSEWORK, AND PERMANENT CAMBER WHICH SHALL BE PROVIDED FOR IN ADDITION TO THE ELEVATIONS SHOWN. AFTER REMOVAL OF THE FALSEWORK, THE FINISHED STRUCTURES SHALL CONFORM TO THE PROFILE AND ELEVATIONS SHOWN ON THE PLANS AND CONSTRUCTION ELEVATIONS FURNISHED BY THE ENGINEER.

DETAILED DRAWINGS FOR FALSEWORK OR FORMS FOR BRIDGE SUPERSTRUCTURE AND ANY STRUCTURE OR PARTS OF A STRUCTURE AS NOTED ON THE PLANS SHALL BE SUBMITTED TO THE ENGINEER FOR APPROVAL BEFORE CONSTRUCTION OF THE FALSEWORK OR FORMS IS STARTED.

REINFORCING STEEL:

ALL REINFORCING STEEL SHALL BE DEFORMED WITH THE EXCEPTION OF #2 BARS WHICH MAY BE FABRICATED FROM COLD DRAWN STEEL WIRE. DIMENSIONS RELATIVE TO PLACEMENT OF REINFORCING ARE TO CENTERS OF BARS UNLESS OTHERWISE INDICATED IN THE PLANS. DIMENSIONS ON BAR DETAILS ARE TO CENTERS OF BARS OR ARE OUT TO OUT AS INDICATED ON PLANS.

WIRE BAR SUPPORTS SHALL BE PROVIDED FOR REINFORCING STEEL WHERE INDICATED ON THE PLANS. WHEN BAR SUPPORT PIECES ARE PLACED IN CONTINUOUS LINES, THEY SHALL BE SO PLACED THAT THE ENDS OF THE SUPPORTING WIRES SHALL BE LAPPED TO LOCK LEGS ON ADJOINING PIECES.

STRUCTURAL STEEL:

AT THE CONTRACTOR'S OPTION, HE MAY SUBSTITUTE 7/8" Ø SHEAR STUDS FOR THE 3/4" Ø STUDS SPECIFIED ON THE PLANS. THIS SUBSTITUTION SHALL BE MADE AT THE RATE OF 3 - 7/8" Ø STUDS FOR 4 - 3/4" Ø STUDS, AND STUD SPACING CHANGES SHALL BE MADE AS NECESSARY TO PROVIDE THE SAME EQUIVALENT NUMBER OF 7/8" Ø STUDS ALONG THE BEAM AS SHOWN FOR 3/4" Ø STUDS BASED ON THE RATIO OF 3 - 7/8" Ø STUDS FOR 4 - 3/4" Ø STUDS. STUDS OF THE LENGTH SPECIFIED ON THE PLANS MUST BE PROVIDED. THE MAXIMUM SPACING SHALL BE 2'-0".

EXCEPT AT THE INTERIOR SUPPORTS OF CONTINUOUS BEAMS WHERE THE COVER PLATE IS IN CONTACT WITH BEARING PLATE, THE CONTRACTOR MAY, AT HIS OPTION, SUBSTITUTE FOR THE COVER PLATES DESIGNATED ON THE PLANS COVER PLATES OF THE EQUIVALENT AREA PROVIDED THESE PLATES ARE AT LEAST 5/16" IN THICKNESS AND DO NOT EXCEED A WIDTH EQUAL TO THE FLANGE WIDTH LESS 2" OR A THICKNESS EQUAL TO 2 TIMES THE FLANGE THICKNESS. THE SIZE OF FILLET WELDS SHALL CONFORM TO THE REQUIREMENTS OF THE CURRENT ANSI/AASHTO/AWS "BRIDGE WELDING CODE". ELECTROSLAG WELDING WILL NOT BE PERMITTED.

PLACEMENT OF BEAM OR GIRDER MEMBERS ON TRUCKS FOR HAULING SHALL BE DONE IN COMPLIANCE WITH LIMITS SHOWN ON SKETCHES PROVIDED TO THE MATERIALS AND TEST UNIT APPROVED BY THE STRUCTURE DESIGN UNIT DATED MAY 8, 1991. THESE SKETCHES PRIMARILY LIMIT THE UNSUPPORTED CANTILEVER LENGTH OF MEMBERS. WHEN THE CONTRACTOR WISHES TO PLACE MEMBERS ON TRUCKS NOT IN ACCORDANCE WITH THESE LIMITS, TO SHIP BY RAIL, TO ATTACH SHIPPING RESTRAINTS TO THE MEMBERS OR TO INVERT MEMBERS, HE SHALL SUBMIT A SKETCH FOR APPROVAL PRIOR TO SHIPPING. SEE ALSO ARTICLE 1072-11.

WITH THE SOLE EXCEPTION OF EDGES AT SURFACES WHICH BEAR ON OTHER SURFACES, ALL SHARP EDGES AND ENDS OF SHAPES AND PLATES SHALL BE SLIGHTLY ROUNDED BY SUITABLE MEANS TO A RADIUS OF APPROXIMATELY 1/16 INCH OR EQUIVALENT FLAT SURFACE AT A SUITABLE ANGLE PRIOR TO PAINTING, GALVANIZING, OR METALLIZING.

HANDRAILS AND POSTS:

METAL STANDARDS AND FACES OF THE CONCRETE END POSTS FOR THE METAL RAIL SHALL BE SET NORMAL TO THE GRADE OF THE CURB, UNLESS OTHERWISE SHOWN ON PLANS. THE METAL RAIL AND TOPS OF CONCRETE POSTS USED WITH THE ALUMINUM RAIL SHALL BE BUILT PARALLEL TO THE GRADE OF THE CURB.

METAL HANDRAILS SHALL BE IN ACCORDANCE WITH THE PLANS. RAILS SHALL BE AS MANUFACTURED FOR BRIDGE RAILING. CASTINGS SHALL BE OF A UNIFORM APPEARANCE. FINS AND OTHER DEFORMATIONS RESULTING FROM CASTING OR OTHERWISE SHALL BE REMOVED IN A MANNER SO THAT A UNIFORM COLORING OF THE COMPLETED CASTING SHALL BE OBTAINED. CASTINGS WITH DISCOLORATIONS OR OF NON-UNIFORM COLORING WILL NOT BE ACCEPTED. CERTIFIED MILL REPORTS ARE REQUIRED FOR METAL RAILS AND POSTS.

SPECIAL NOTES:

GENERALLY, IN CASE OF DISCREPANCY, THIS STANDARD SHEET OF NOTES SHALL GOVERN OVER THE SPECIFICATIONS, BUT THE REMAINDER OF THE PLANS SHALL GOVERN OVER NOTES HEREON, AND SPECIAL PROVISIONS SHALL GOVERN OVER ALL. SEE SPECIFICATIONS ARTICLE 105-4.

ENGLISH

JANUARY, 1990

STD. NO. SN