VOLUME 2 OF 3

BASCULE SPAN BRIDGE DRAWINGS

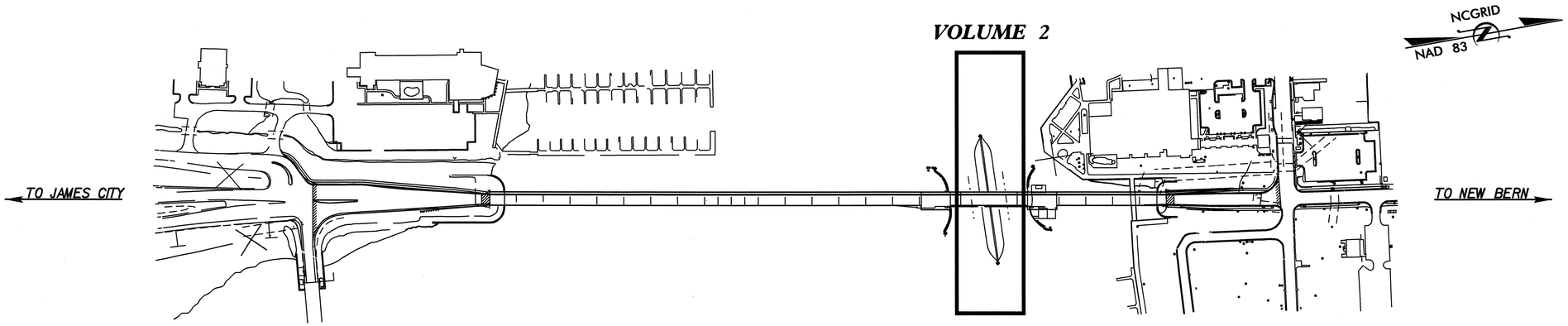

VOLUME 1	Bridge Approach Spans & Retaining Walls	S-1 thru S-118 & W-1 thru W-3
VOLUME 2	Bascule Span Bridge Drawings	S-119 thru S-220
VOLUME 3	Architectural, Mechanical and Electrical Drawings	S-221 thru S-348

INDEX OF SELECTED SHEETS	SHEET(S)
BRIDGE APPROACH SPANS TOTAL BILL OF MATERIAL	S-8
CONSTRUCTION STAGING (BASCULE SPAN)	S-119 & S-120
BASCULE SPAN INDEX OF DRAWINGS	S-121
BASCULE SPAN, ARCHITECTURAL, MECHANICAL, AND ELECTRIC TOTAL BILL OF MATERIAL	S-126
INDEX OF ARCHITECTURAL DRAWINGS	S-221
INDEX OF MECHANICAL DRAWINGS	S-244
INDEX OF ELECTRICAL DRAWINGS	S-262

PROJECT NO. B-2532
CRAVEN COUNTY
STATION:

STATE OF NORTH CAROLINA
DEPARTMENT OF TRANSPORTATION
RALEIGH

INDEX

REVISIONS

NO.	BY:	DATE:	NO.	BY:	DATE:
1			3		
2			4		

DRAWN BY : W.D. CRUTCHER DATE : 12-07-06
CHECKED BY : T.P GARRETT DATE : 12-07-06

07-DEC-2006 15:20
S:\PG3\Darrell\B-2532_sd_INDEX.dgn
dcrutcher

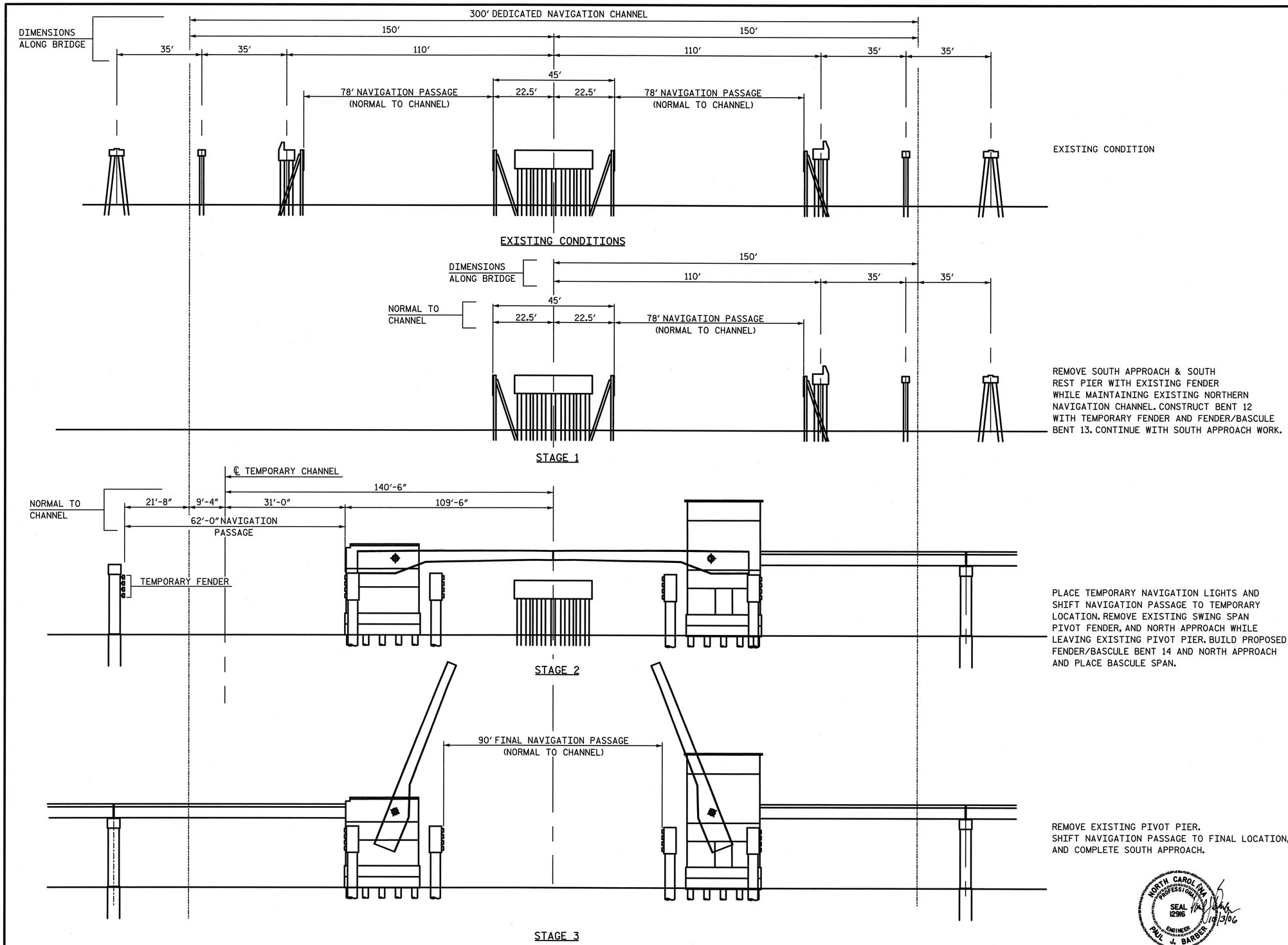

CONSTRUCTION STAGING

PROJECT NO. B-2532

CRAVEN COUNTY

STATION: 31+21.29 -L-

NORTH CAROLINA PROFESSIONAL SEAL 12916 ENGINEER PAUL J. BARBER 10/13/06

STATE OF NORTH CAROLINA
DEPARTMENT OF TRANSPORTATION
RALEIGH, NC

CONSTRUCTION STAGING
ALFRED CUNNINGHAM BRIDGE
OVER THE TRENT RIVER

HNTB NORTH CAROLINA, P.C.
343 E. Six Forks Rd., Suite 200, Raleigh, N.C. 27609

DRAWN BY J. BAYNE DATE 6/06
CHECKED BY P. BARBER DATE 6/06
DWG. NO. CSI

REVISIONS						SHEET NO.
NO.	BY	DATE	NO.	BY	DATE	S-119
1			3			TOTAL SHEETS
2			4			348

62'-0" MIN. NAVIGATION PASSAGE

21'-8"

40'-4"

EDGE OF TEMPORARY CHANNEL

150'

150'

300' DEDICATED NAVIGATION CHANNEL

NEUSE RIVER

TRENT RIVER

2SBK NEW BERN CONVENTION CENTER

RETENTION POND

STORM WATER RETENTION

BST PA

PIPE ELEV UNKNOWN

LIFT STATION

1SBK PARK RESTROOMS

UNABLE TO DETERMINE FLOW FROM THESE PIPES

-BL-4
PINC 33+16.67 -BL-
-L- STA 35+22.73
68.83' RT.

-BL-3
PINC 30+15.09 -BL-
NCDOT GPS B2532-2
-L- STA 35+73.57
41.66' RT.

NCDOT GPS B2532-2

PROJECT NO. B-2532

CRAVEN COUNTY

STATION: 31+21.29 -L-

STATE OF NORTH CAROLINA
DEPARTMENT OF TRANSPORTATION
RALEIGH, NC

TEMPORARY NAVIGATION CONSTRUCTION STAGING
ALFRED CUNNINGHAM BRIDGE OVER THE TRENT RIVER

NORTH CAROLINA PROFESSIONAL SEAL 12916 ENGINEER PAUL J. BARBER 6/13/06

HNTB NORTH CAROLINA, P.C.
343 E. Six Forks Rd., Suite 200, Raleigh, N.C. 27609

DRAWN BY J BAYNE DATE 6/06
CHECKED BY P BARBER DATE 6/06

DWG. NO. CS2

REVISIONS						SHEET NO.
NO.	BY	DATE	NO.	BY	DATE	S-120
1			3			TOTAL SHEETS
2			4			348

INDEX OF DRAWINGS - BASCULE SPAN "N"

DWG. NO.	DESCRIPTION	DWG. NO.	DESCRIPTION
B100	BASCULE SPAN "N" INDEX OF DRAWINGS	B150	BASCULE PIER FENDER SYSTEM PLAN
B101	BASCULE SPAN "N" GENERAL PLAN	B151	BASCULE PIER FENDER SYSTEM DETAILS - 1
B102	BASCULE SPAN "N" GENERAL ELEVATION	B152	BASCULE PIER FENDER SYSTEM DETAILS - 2
B103	BASCULE SPAN "N" TYPICAL CROSS SECTIONS	B153	BASCULE PIER TEMPORARY FENDER SYSTEM
B104	BASCULE SPAN "N" GENERAL NOTES	B154	BASCULE SPAN "N" FRAMING PLAN
B105	BASCULE SPAN "N" BILL OF MATERIALS	B155	BASCULE SPAN "N" TYPICAL SECTIONS
B106	BASCULE PIER 13 & 14 FOOTING PLANS	B156	BASCULE SPAN "N" TRUNNION SUPPORT ELEVATION
B107	BASCULE PIER 13 & 14 DRILLED PIER DETAILS	B157	BASCULE SPAN "N" TRUNNION COLUMN DETAILS
B108	SOUTH BASCULE PIER 13 FLOOR LEVEL PLAN	B158	BASCULE SPAN "N" TRUNNION COLUMN BRACING DETAILS
B109	SOUTH BASCULE PIER 13 FLOOR LEVEL PLAN REINFORCEMENT PLAN	B159	BASCULE SPAN "N" CAMBER TABLES
B110	SOUTH BASCULE PIER 13 TRUNNION SUPPORT LEVEL PLAN	B160	BASCULE SPAN "N" BALANCE TABLES
B111	SOUTH BASCULE PIER 13 TRUNNION SUPPORT LEVEL REINFORCEMENT PLAN	B161	BASCULE SPAN "N" OPENING DIAGRAM
B112	SOUTH BASCULE PIER 13 ROADWAY LEVEL PLAN	B162	BASCULE SPAN "N" SUGGESTED CONSTRUCTION SEQUENCE
B113	SOUTH BASCULE PIER 13 ROADWAY LEVEL REINFORCEMENT PLAN	B163	BASCULE SPAN "N" TEMPORARY SUPPORT BENT
B114	SOUTH BASCULE PIER 13 NORTH WALL ELEVATION	B164	BASCULE SPAN "N" BASCULE GIRDER ELEVATION
B115	SOUTH BASCULE PIER 13 SOUTH WALL ELEVATION	B165	BASCULE SPAN "N" BASCULE GIRDER DETAILS
B116	SOUTH BASCULE PIER 13 WEST & EAST WALL ELEVATION	B166	BASCULE SPAN "N" STRINGER ELEVATIONS
B117	SOUTH BASCULE PIER 13 LONGITUDINAL SECTION (LOOKING NORTH)	B167	BASCULE SPAN "N" STRINGER DETAILS
B118	SOUTH BASCULE PIER 13 LONGITUDINAL SECTION (LOOKING SOUTH)	B168	BASCULE SPAN "N" FLOORBEAM FB3
B119	SOUTH BASCULE PIER 13 TRANSVERSE SECTIONS (LOOKING EAST & WEST)	B169	BASCULE SPAN "N" FLOORBEAM FB6
B120	SOUTH BASCULE PIER 13 APPROACH SPAN BEARING PLAN AND DETAILS	B170	BASCULE SPAN "N" COUNTERWEIGHT FLOORBEAM FB0 ELEVATIONS
B121	SOUTH BASCULE PIER 13 SECTIONS AND DETAILS	B171	BASCULE SPAN "N" COUNTERWEIGHT FLOORBEAM FB1 ELEVATIONS
B122	NORTH BASCULE PIER 14 FLOOR LEVEL PLAN	B172	BASCULE SPAN "N" COUNTERWEIGHT CROSS SECTIONS
B123	NORTH BASCULE PIER 14 FLOOR LEVEL REINFORCEMENT PLAN	B173	BASCULE SPAN "N" COUNTERWEIGHT DETAILS - 1
B124	NORTH BASCULE PIER 14 TRUNNION SUPPORT LEVEL PLAN	B174	BASCULE SPAN "N" COUNTERWEIGHT DETAILS - 2
B125	NORTH BASCULE PIER 14 TRUNNION SUPPORT LEVEL REINFORCEMENT PLAN	B175	BASCULE SPAN "N" COUNTERWEIGHT BALANCE BLOCK LAYOUT
B126	NORTH BASCULE PIER 14 ROADWAY LEVEL PLAN	B176	BASCULE SPAN "N" MISCELLANEOUS STEEL DETAILS
B127	NORTH BASCULE PIER 14 ROADWAY LEVEL REINFORCEMENT PLAN	B177	BASCULE SPAN "N" DECK JOINT DETAILS AT PP0
B128	NORTH BASCULE PIER 14 SOUTH WALL ELEVATION	B177A	APPROACH SPANS "M" & "O" DECK JOINT DETAILS AT PP0
B129	NORTH BASCULE PIER 14 NORTH WALL ELEVATION	B178	BASCULE SPAN "N" DECK JOINT DETAILS AT PP6
B130	NORTH BASCULE PIER 14 WEST & EAST WALL ELEVATION	B179	BASCULE SPAN "N" SPAN LOCK AND LIVE LOAD SHOE DETAILS
B131	NORTH BASCULE PIER 14 LONGITUDINAL SECTION (LOOKING SOUTH)	B180	BASCULE SPAN "N" TOE SPAN LOCK AND PLATFORM DETAILS - 1
B132	NORTH BASCULE PIER 14 LONGITUDINAL SECTION (LOOKING NORTH)	B181	BASCULE SPAN "N" TOE SPAN LOCK AND PLATFORM DETAILS - 2
B133	NORTH BASCULE PIER 14 TRANSVERSE SECTION (LOOKING EAST & WEST)	B182	BASCULE SPAN "N" SOUTH BASCULE LEAF DECK PLAN
B134	NORTH BASCULE PIER 14 APPROACH SPAN BEARING PLAN AND DETAILS	B183	BASCULE SPAN "N" NORTH BASCULE LEAF DECK PLAN
B135	NORTH BASCULE PIER 14 SECTIONS AND DETAILS	B184	BASCULE SPAN "N" DECK CROSS SECTION AND DETAILS
B136	BASCULE PIER MAINTENANCE WALKWAYS AND LADDERS	B185	BASCULE SPAN "N" DECK SLAB LAYOUT AND JOINT DETAILS
B137	BASCULE PIER MAINTENANCE WALKWAYS AND LADDERS	B186	BASCULE SPAN "N" BRIDGE RAILING ELEVATIONS
B138	BASCULE PIER MAINTENANCE WALKWAYS AND LADDERS	B187	BASCULE SPAN "N" BRIDGE RAILING DETAILS
B139	BASCULE PIER MAINTENANCE WALKWAYS AND LADDERS	B188	BASCULE PIER RAILING ELEVATIONS AND DETAILS
B140	CONTROL HOUSE GENERAL NOTES	B189	BASCULE SPAN "N" CLASSIC CONCRETE BRIDGE RAILING DETAILS
B141	CONTROL HOUSE SOUTH & EAST ELEVATIONS	B190	BASCULE PIER UTILITY POLE ANCHORAGE DETAILS
B142	CONTROL HOUSE NORTH & WEST ELEVATIONS	B191	BASCULE SPAN "N" NAVIGATIONAL CLEARANCE GAUGE
B143	CONTROL HOUSE GENERATOR ROOM PLAN AND DETAILS	B192	BASCULE SPAN "N" BIRD NETTING AND BIRD SPIKES
B144	CONTROL HOUSE ELECTRICAL ROOM PLAN AND DETAILS	B193	SOUTH BASCULE PIER 13 BAR LISTS AND QUANTITIES
B145	CONTROL HOUSE CONTROL ROOM PLAN AND DETAILS	B194	SOUTH BASCULE PIER 13 BAR LISTS AND QUANTITIES
B146	CONTROL HOUSE ROOF FRAMING PLANS	B195	NORTH BASCULE PIER 14 BAR LISTS AND QUANTITIES
B147	CONTROL HOUSE ROOF FRAMING SECTIONS	B196	NORTH BASCULE PIER 14 BAR LISTS AND QUANTITIES
B148	CONTROL HOUSE STRUCTURAL DETAILS - 1	B197	CONTROL HOUSE REINFORCEMENT AND QUANTITIES
B149	CONTROL HOUSE STRUCTURAL DETAILS - 2	B198	BASCULE SPAN "N" DECK SLAB BAR LIST AND QUANTITIES

ABBREVIATIONS

ALT	ALTERNATE	MANUF	MANUFACTURER
ARCH	ARCHITECTURAL	MAX	MAXIMUM
APPROX	APPROXIMATE	MB	MACHINE BOLTS
B OR BOTT	BOTTOM	MC	MOMENT CONNECTION
BM	BENCHMARK	MECH	MECHANICAL
BRG	BEARING	MHW	MEAN HIGH WATER
BOS	BOTTOM OF STEEL	MIN	MINIMUM
BTWN	BETWEEN	MISC	MISCELLANEOUS
C-C OR CTS.	CENTER TO CENTER	NB	NORTH BOUND
CJ	CONTROL JOINTS	NS	NEAR SIDE
CJP	COMPLETE JOINT PENETRATION	NTS	NOT TO SCALE
℄	CENTER LINE	OC	ON CENTER
CL OR CLR	CLEAR	OPNG	OPENING
CONC	CONCRETE	OPP	OPPOSITE
CONN	CONNECTION	PL OR ℙ	PLATE
CONT	CONTINUOUS	PSF	POUNDS PER SQUARE FOOT
CTS	CENTERS	PSI	POUNDS PER SQUARE INCH
DIA	DIAMETER	R	RADIUS
DWG	DRAWING	REINF	REINFORCEMENT
EA	EACH	RF	REAR FACE
EF	EACH FACE	RO	ROUGH OPENING
EL OR ELEV	ELEVATION	SB	SOUTH BOUND
ELECT	ELECTRICAL	SC	SLIP CRITICAL
EMBED	EMBEDDED	SHLDR	SHOULDER
EOS	EDGE OF SLAB	SIM	SIMILAR
EQ	EQUAL	SLO	SHORT LEG OUT
EQ SPA	EQUALLY SPACED	SLV	SHORT LEG VERTICAL
EXIST	EXISTING	SLH	SHORT LEG HORIZONTAL
EXP	EXPANSION	SPECS	SPECIFICATIONS
EXT	EXTERIOR	SPA	SPACING
FF	FINISH FLOOR	SS	STAINLESS STEEL
FS	FAR SIDE	STA	STATION
FT	FEET	STD	STANDARD
FTG	FOOTING	STIFF	STIFFENER
GA	GUAGE	STR	STRAIGHT
GALV	GALVANIZED	SWLK	SIDE WALK
GD	GRADE DATA	SYMM	SYMMETRICAL
GR	GRADE	T	TOP
HAS	HEADED ANCHOR STUD	TBD	TO BE DETERMINED
HORIZ	HORIZONTAL	THK	THICK
HSA	HEADED STUD ANCHOR	TOC	TOP OF CONCRETE
INT	INTERIOR	TOS	TOP OF STEEL
K	KIP	TOW	TOP OF WALL
-L-	GRADE DATA LINE	TYP	TYPICAL
LLO	LONG LEG OUT	UNO	UNLESS NOTED OTHERWISE
LLV	LONG LEG VERTICAL	U/S	UNDERSIDE
LLH	LONG LEG HORIZONTAL	VERT	VERTICAL
LW	LIGHT WEIGHT	W/	WITH
		WF	WIDE FLANGE
		WP	WORK POINT
		WWF	WELDED WIRE FABRIC

NOTES:

1. FOR INDEX OF PIER 14 CONTROL HOUSE AND PIER 13 ELECTRICAL ROOM DRAWINGS, SEE DWG. B200.
2. FOR INDEX OF MECHANICAL DRAWINGS, SEE DWG. M1.
3. FOR INDEX OF ELECTRICAL DRAWINGS, SEE DWG. E1.

PROJECT NO. B-2532

CRAVEN COUNTY

STATION: 31+21.29 -L-

NORTH CAROLINA PROFESSIONAL SEAL 12916 ENGINEER PAUL J. BARBER 10/9/06

STATE OF NORTH CAROLINA
DEPARTMENT OF TRANSPORTATION
RALEIGH, NC

BASCULE SPAN
INDEX OF DRAWINGS

HNTB NORTH CAROLINA, P.C.
343 E. Six Forks Rd., Suite 200, Raleigh, N.C. 27609

DRAWN BY PE DATE 10/06
CHECKED BY GT DATE 10/06

DWG. NO. B100

REVISIONS						SHEET NO.
NO.	BY	DATE	NO.	BY	DATE	S-121
1			3			TOTAL SHEETS
2			4			348

jallo AT NYD072
02-OCT-2006 14:10
J:\odot\42873 - Alfred Cunningham\DGN\100% Submission\B2532_SD_B100_Index\dwg\sdgn

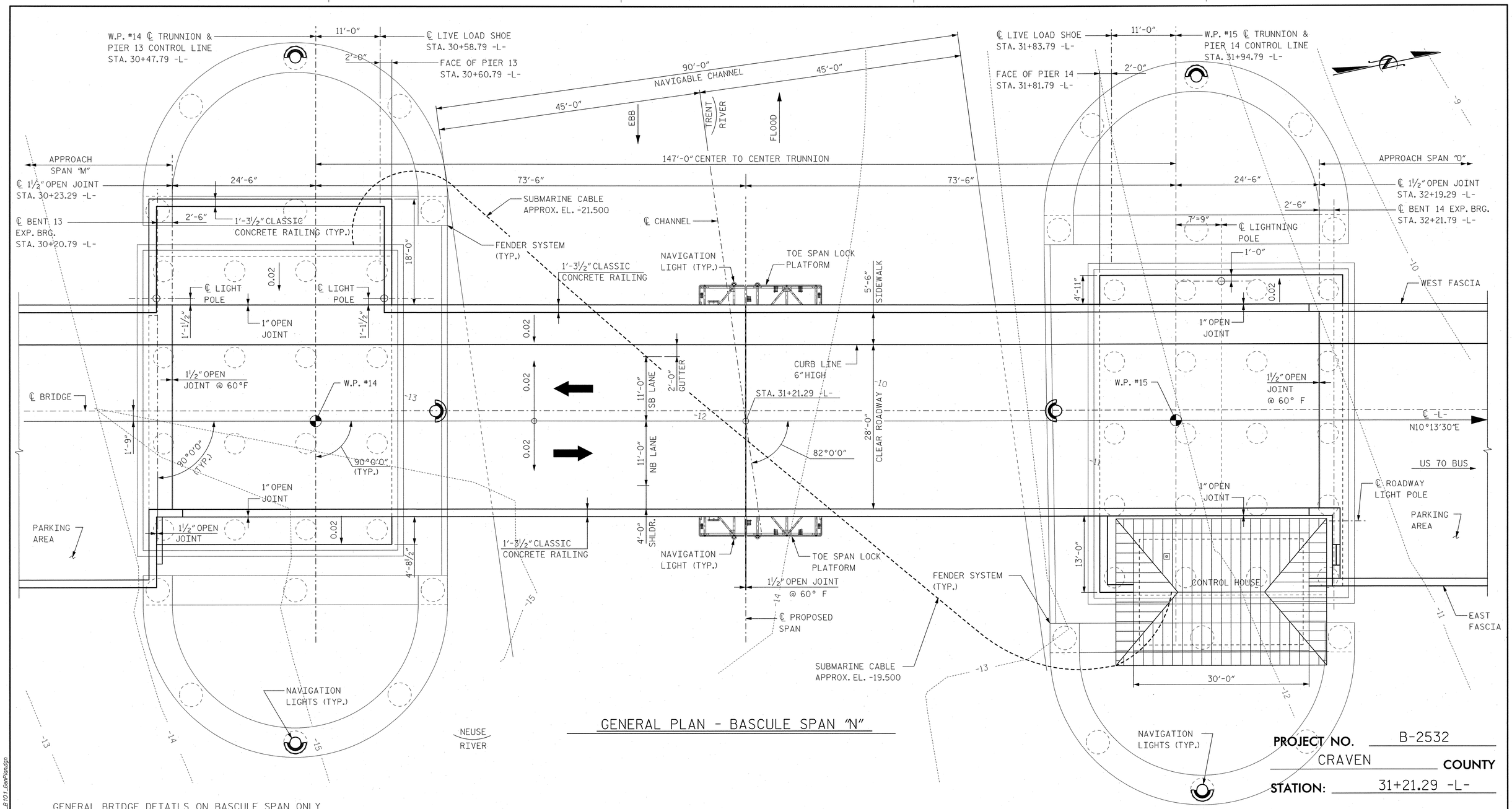

GENERAL PLAN - BASCULE SPAN "N"

PROJECT NO. B-2532

CRAVEN **COUNTY**

STATION: 31+21.29 -L-

GENERAL BRIDGE DETAILS ON BASCULE SPAN ONLY

1. UTILITIES: ELECTRIC AND COMMUNICATION UTILITIES FOR THE BASCULE SPAN SHALL BE CARRIED BY THE APPROACH SPANS ALONG A UTILITY BAY AS SHOWN ON THE PLANS. SUBMARINE CABLE SHALL BE PROVIDED BETWEEN BASCULE PIERS.
2. LIGHTING: LIGHT POLE SHALL BE MOUNTED TO TOP OF CONCRETE RAILING AT THE OBSERVATION AREA. LIGHTNING POLE MOUNTED ON BASCULE PIER 14.
3. JOINTS: 1½" OPEN JOINTS AT 60°F TRANSVERSELY AT TIP OF BASCULE AND AT END OF COUNTERWEIGHT SPAN. 1" OPEN JOINT AT 60°F LONGITUDINALLY ALONG THE MOVABLE SPAN.
4. INSPECTION ACCESS: PLATFORMS SHALL BE PROVIDED AT CENTERLINE OF PROPOSED SPAN TO ALLOW FOR ACCESS TO THE SPAN LOCKS. FOR ROUTINE MAINTENANCE, WALKWAYS AND LADDERS SHALL BE PROVIDED INSIDE THE BASCULE PIER TO ALLOW FOR MAINTENANCE AND INSPECTION ACCESS THROUGHOUT THE PIER.
5. PAINT SYSTEM: PER NCDOT SPECIFICATIONS, FINISH COLOR SHALL BE 1080-12 GRAY.

NOTES:

1. FOR GENERAL ELEVATION OF BASCULE SPAN, SEE DWG. B102.
2. FOR GENERAL NOTES, SEE DWG. B104.
3. FOR TYPICAL CROSS SECTIONS OF BASCULE SPAN, SEE DWG. B103.

NORTH CAROLINA PROFESSIONAL SEAL 12916 ENGINEER PAUL J. BARBER 10/26/06

HNTB NORTH CAROLINA, P.C.
343 E. Six Forks Rd., Suite 200, Raleigh, N.C. 27609

DRAWN BY JRE DATE 10/06
CHECKED BY GT DATE 10/06

DWG. NO. **B101**

STATE OF NORTH CAROLINA
DEPARTMENT OF TRANSPORTATION
RALEIGH, NC

BASCULE SPAN "N"
GENERAL PLAN

REVISIONS						SHEET NO.
NO.	BY	DATE	NO.	BY	DATE	S-122
1			3			TOTAL SHEETS
2			4			348

Jobno JT_W100072
Model_2006_N1002
JXcadd42873 - Alfred Cunningham\OSHA 1002\ Submission\B2532_SD_B101_GenPlan.dgn

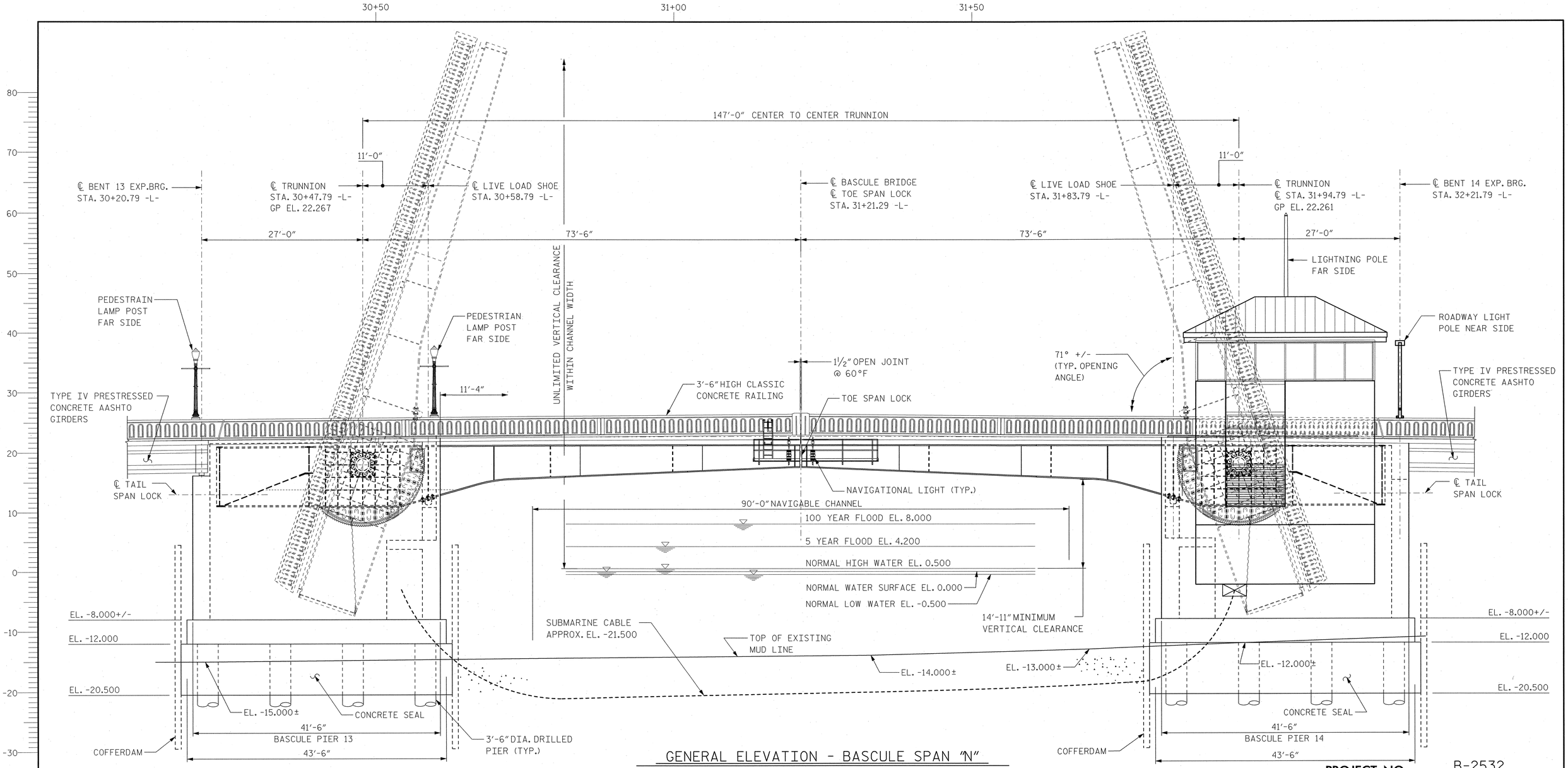

GENERAL ELEVATION - BASCULE SPAN "N"

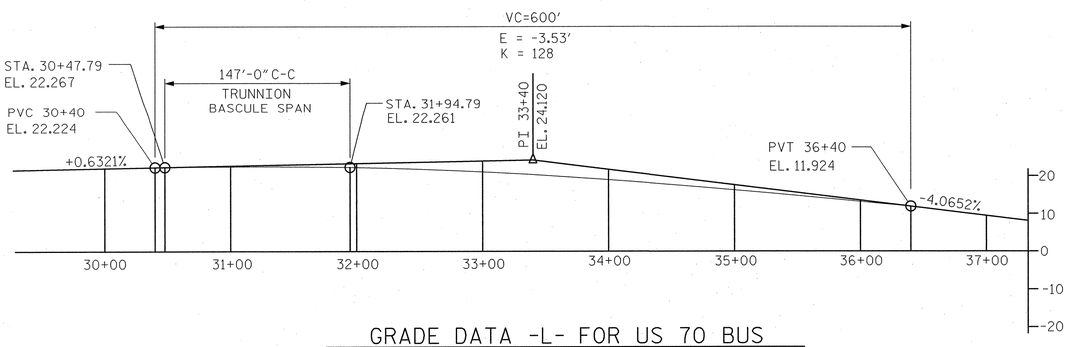

GRADE DATA -L- FOR US 70 BUS

NOTES:

1. FOR GENERAL PLAN OF BASCULE SPAN, SEE DWG. B101.
2. FOR GENERAL NOTES, SEE DWG. B104.
3. FOR TYPICAL CROSS SECTIONS OF BASCULE SPAN, SEE DWG. B103.
4. VERTICAL DATUM USED IS NAVD88. THE FOLLOWING BENCHMARKS SHALL BE USED FOR THE PROJECT:

BM "A"
RAILROAD SPIKE IN NE CORNER OF PAVED PARKING AREA OF OUTBACK STEAKHOUSE 284' LT. OF -L- STA. 5+84.00. EL.= 7.14

BM "B"
RAILROAD SPIKE IN SW CORNER OF PAVED PARKING AREA IN NW QUADRANT OF FRONT STREET & TRYON PALACE DR. INTERSECTION 142.52' LT. OF -L- STA. 38+16.00. EL.=5.82

NORTH CAROLINA PROFESSIONAL SEAL 12916 ENGINEER PAUL J. BARBER 10/20/06

PROJECT NO. B-2532

CRAVEN COUNTY

STATION: 31+21.29 -L-

STATE OF NORTH CAROLINA
DEPARTMENT OF TRANSPORTATION
RALEIGH, NC

BASCULE SPAN "N"
GENERAL ELEVATION

HNTB
HNTB NORTH CAROLINA, P.C.
343 E. Six Forks Rd., Suite 200, Raleigh, N.C. 27609

DRAWN BY JRE DATE 10/06
CHECKED BY GT DATE 10/06

DWG. NO. B102

REVISIONS						SHEET NO.
NO.	BY	DATE	NO.	BY	DATE	S-123
1			3			TOTAL SHEETS
2			4			348

Field: JT N100272
ROUTE: 70 N100272
JCodd/42873 - Alfred Cunningham/DGN/1001. Submission/B2532_S0_B102_GenElev.dgn

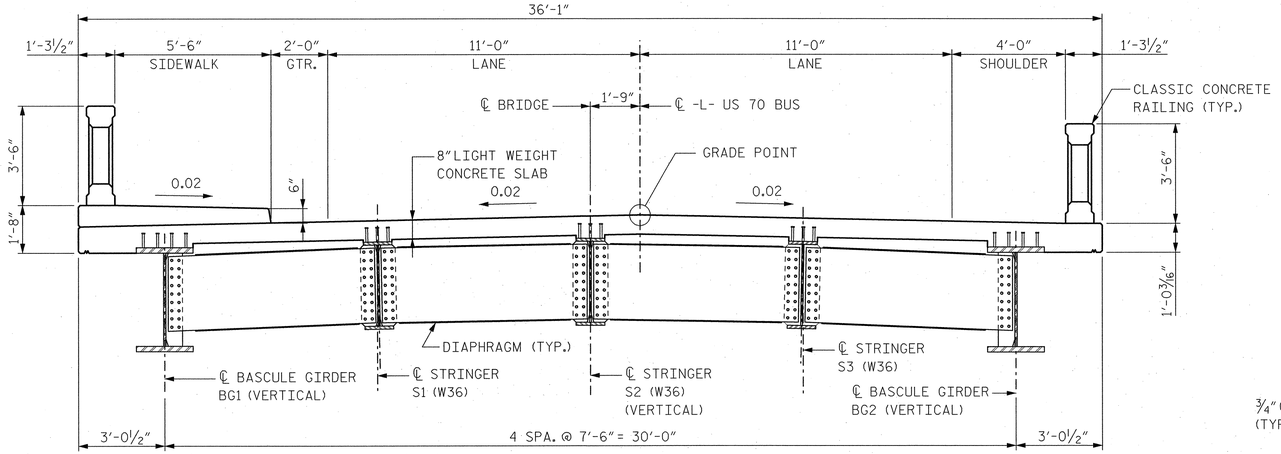

TYPICAL CROSS SECTION

BASCULE SPAN "N" COMPOSITE DECK ON STEEL GIRDERS AT DIAPHRAGM

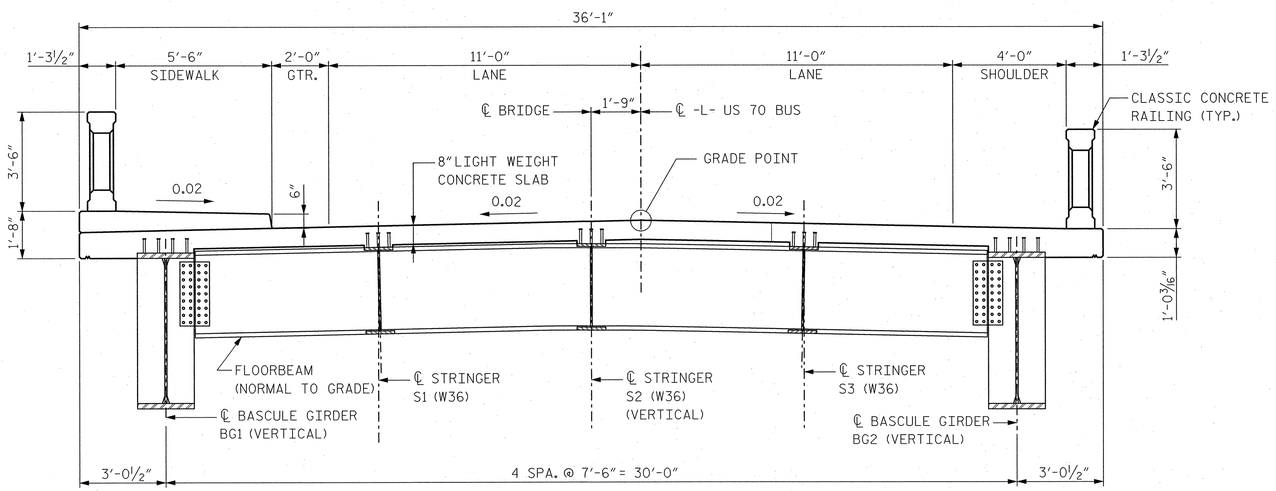

TYPICAL CROSS SECTION

BASCULE SPAN "N" COMPOSITE DECK ON STEEL GIRDERS AT FLOORBEAM

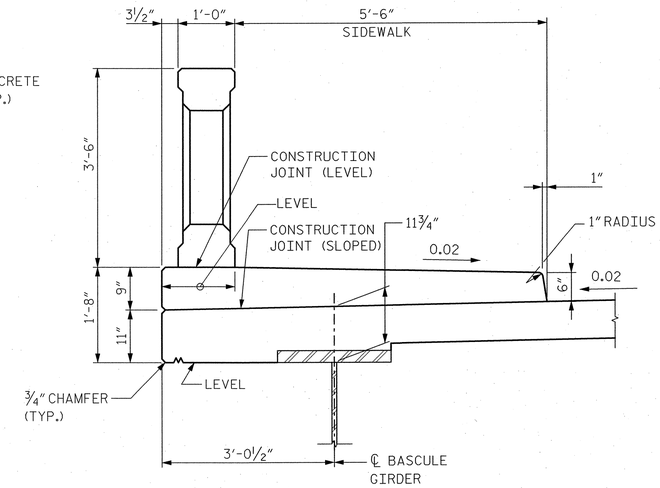

TYPICAL DETAIL

WEST FASCIA

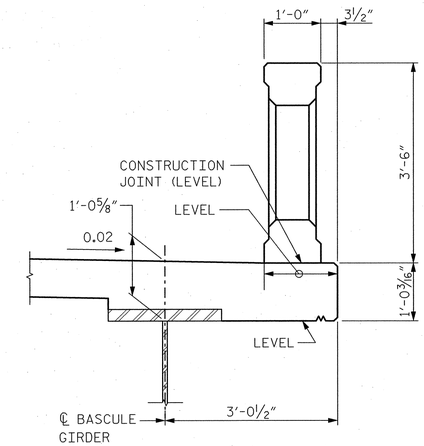

TYPICAL DETAIL

EAST FASCIA

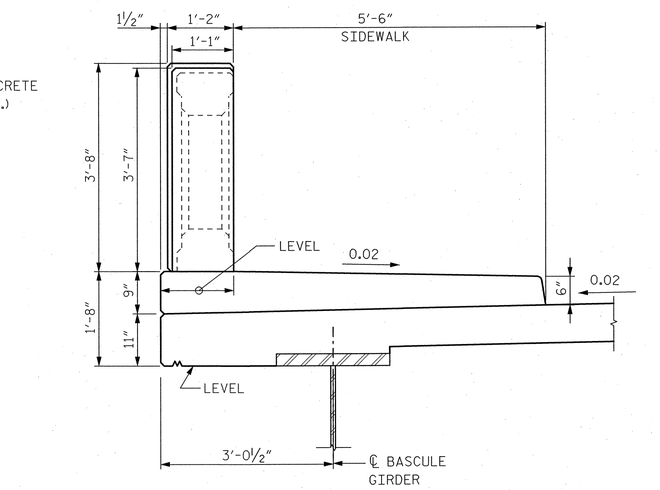

TYPICAL DETAIL

WEST FASCIA AT PILASTER

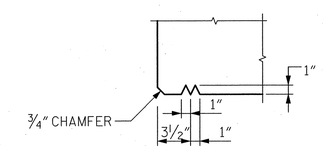

DRIP GROOVE DETAIL

PROJECT NO. B-2532

CRAVEN **COUNTY**

STATION: 31+21.29 -L-

NOTES:

1. FOR FRAMING PLAN OF BASCULE SPAN, SEE DWG. B154.
2. FOR DECK SLAB REINFORCEMENT, SEE DWG. B184.

NORTH CAROLINA PROFESSIONAL SEAL 12916 ENGINEER PAUL J. BARBER 10/3/06

STATE OF NORTH CAROLINA
DEPARTMENT OF TRANSPORTATION
RALEIGH, NC

BASCULE SPAN "N"
TYPICAL CROSS SECTIONS

HNTB NORTH CAROLINA, P.C.
343 E. Six Forks Rd., Suite 200, Raleigh, N.C. 27609

DRAWN BY JRE DATE 10/06
CHECKED BY SL DATE 10/06
DWG. NO. **B103**

REVISIONS						
NO.	BY	DATE	NO.	BY	DATE	
1			3			
2			4			

SHEET NO. S-124
TOTAL SHEETS 348

field: AT W10072
DocCompare: 1.4.4
Jacobi/42873 - Alfred Cunningham/DGN 10.02 Submission\B2532_SD_B103_perthyssen.dgn

BASCULE SPAN DESIGN DATA:

A. DESIGN SPECIFICATIONS
1. AASHTO STANDARD SPECIFICATIONS FOR HIGHWAY BRIDGES, 17TH EDITION, 2002 WITH 2005 ERRATA.
2. AASHTO STANDARD SPECIFICATIONS FOR MOVABLE HIGHWAY BRIDGES, 1988 AND ALL INTERIM SPECIFICATIONS THROUGH 1995.
3. AASHTO GUIDE SPECIFICATIONS AND COMMENTARY FOR VESSEL COLLISION DESIGN OF HIGHWAY BRIDGES, 1991.
4. 2006 NCDOT STANDARD SPECIFICATIONS FOR ROADS AND STRUCTURES WITH MAJOR CHANGES AND REVISIONS THROUGH 2006.
5. NCDOT ROADWAY DESIGN MANUAL, 2002.
6. NCDOT STRUCTURE DESIGN - DESIGN MANUAL.
7. AASHTO/AWS BRIDGE WELDING CODE.

B. GEOMETRY
1. REPLACES BRIDGE NO. 60.
2. THE GENERAL BASCULE SPAN ARRANGEMENT OF THE STRUCTURE IS SHOWN ON THE FRAMING PLAN.
3. THE WIDTH OF ROADWAY SHALL BE 28 FT (TWO 11 FT LANES, A 2 FT GUTTER AND A 4 FT SHOULDER). A 5'-6" SIDEWALK SHALL BE PROVIDED ON THE WEST SIDE.
4. A CONCRETE BARRIER WILL BE PROVIDED ON THE BRIDGE IN ACCORDANCE WITH FHWA, TYPE C411, CLASSIC CONCRETE RAILING PROVIDING TL-2 RATING.
5. A MINIMUM OF 90 FT CLEAR CHANNEL SHALL BE PROVIDED.
6. A MINIMUM VERTICAL CLEARANCE OF 14'-11" MEASURED FROM THE LOW STEEL ON THE SUPERSTRUCTURE TO MEAN HIGH WATER SHALL BE PROVIDED.
7. HYDRAULIC DATA
   NORMAL LOW WATER = -0.50 FT
   NORMAL HIGH WATER = 0.50 FT

   DESIGN DISCHARGE N/A CFS.
   FREQUENCY OF DESIGN FLOOD 50 YEARS.
   DESIGN HIGH WATER ELEVATION 7.20.
   DRAINAGE AREA 497 SQ. MI.
   OVERTOPPING DISCHARGE N/A CFS.
   FREQUENCY OF OVERTOPPING FLOOD 5 YRS.

   OVERTOPPING FLOOD DATA
   BASIC DISCHARGE(Q100) N/A CFS.
   BASIC HIGH WATER ELEVATION 8.00.
   OVERTOPPING FLOOD ELEVATION 4.50.
8. FOR EROSION CONTROL MEASURES, SEE EROSION CONTROL PLANS.

C. DESIGN LOADS
1. THIS BRIDGE HAS BEEN DESIGNED BY THE STRENGTH DESIGN METHOD AS SPECIFIED IN AASHTO STANDARD SPECIFICATIONS.
2. DEAD LOAD:
   LIGHTWEIGHT CONCRETE (UNREINFORCED): 115 PCF
   REINFORCED CONCRETE: 150 PCF
   COUNTERWEIGHT: TBD APPROX. 210 PCF TO 225 PCF
   STRUCTURAL STEEL: 490 PCF
   FUTURE WEARING SURFACE: NO ALLOWANCE
3. LIVE LOAD: ASSUMED LIVE LOAD = HS 20 OR ALTERNATE LOADING. THE MAXIMUM NUMBER OF DESIGN LANES SHALL BE TWO.
   LIVE LOAD PLUS IMPACT DEFLECTION SHALL NOT EXCEED 1/1000 OF THE SPAN LENGTH.

   LIVE LOAD IMPACT, IN ACCORDANCE WITH AASHTO ARTICLE 3.8.2 AND AASHTO MOVABLE BRIDGE SPECIFICATION ARTICLE 2.1.11, SHALL BE APPLIED.

   SIDEWALK LIVE LOAD SHALL BE IN ACCORDANCE WITH AASHTO 3.14.1.1. INSPECTION PLATFORMS SHALL BE DESIGNED FOR A LIVE LOAD OF 60 PSF PER ASCE 7-05.
4. SEISMIC LOAD:
   COEFFICIENT OF ACCELERATION: 0.04 G
   SEISMIC PERFORMANCE CATEGORY (SPC): A
   SITE COEFFICIENT (SOIL PROFILE III) 1.5

   THIS BRIDGE HAS BEEN DESIGNED IN ACCORDANCE WITH THE REQUIREMENTS OF THE AASHTO STANDARD SPECIFICATIONS FOR SEISMIC DESIGN OF HIGHWAY BRIDGES FOR SEISMIC PERFORMANCE CATEGORY A.

   SEISMIC LOADS SHALL BE APPLIED IN BOTH THE CLOSED AND OPEN POSITIONS. ONLY ONE HALF THE LOAD SHALL BE APPLIED IN THE OPEN POSITION, PER AASHTO MOVABLE BRIDGE SPECIFICATIONS, ARTICLE 2.1.15.
5. THERMAL LOADS:
   STEEL STRUCTURES: 0°F TO 120°F
   CONCRETE STRUCTURES: 20°F TO 100°F
6. LONGITUDINAL FORCES: LONGITUDINAL FORCES SHALL BE COMPUTED IN ACCORDANCE WITH AASHTO ARTICLE 3.9
7. ICE LOADS: NO APPLICABLE ICE LOADING ON THE DESIGN OF BASCULE PIER.
8. WIND LOAD: IN ACCORDANCE WITH AASHTO FOR HIGHWAY BRIDGES WITH THE SPAN CLOSED AND IN ACCORDANCE WITH AASHTO FOR MOVABLE HIGHWAY BRIDGES FOR THE SPAN OPEN AND THE SPAN CLOSED POSITION, WITH THE BRIDGE NORMALLY IN THE CLOSED POSITION.
9. STREAM FLOW: FORCES DUE TO STREAM CURRENT SHALL BE BASED ON THE 50 YEAR DESIGN FLOOD WITH A VELOCITY OF 2.28 FPS.
10. SHIP IMPACT: AN INDEPENDENT FENDER SYSTEM IS RELIED UPON FOR PROTECTION OF THE BASCULE PIERS FROM VESSEL COLLISION. THE BASCULE PIERS ARE NOT DESIGNED FOR ANY VESSEL IMPACT. THE FENDER SYSTEM DESIGN IMPACT IS BASED ON A 3035-TONNE VESSEL WITH AN IMPACT SPEED OF 6.5 KNOTS. THE NAVIGABLE CHANNEL DEPTH IS APPROXIMATELY 13.5 FT. BELOW NORMAL LOW WATER EL.-0.50.
11. THIS BRIDGE HAS BEEN DESIGNED IN ACCORDANCE WITH AASHTO'S "GUIDE SPECIFICATION AND COMMENTARY FOR VESSEL COLLISION DESIGN OF HIGHWAY BRIDGE", USING REGULAR IMPORTANCE CLASSIFICATION, METHOD I CRITERIA. TRANSVERSE AND LONGITUDINAL VESSEL FORCES ARE NOT APPLIED SIMULTANEOUSLY. VESSEL DESIGN FORCES FOR AS FOLLOWS:

BRIDGE ELEMENT	TRANSVERSE FORCE (PARALLEL TO BENT)	LONGITUDINAL FORCE (PERPENDICULAR TO BENT)	APPLIED AT ELEVATION
FENDER AT BENT 13	2300 KIPS	1150 KIPS	8.700 (Q5 EL. 4.200)
FENDER AT BENT 14	2300 KIPS	1150 KIPS	8.700 (Q5 EL. 4.200)

12. BUOYANCY: BUOYANCY WILL BE CONSIDERED FOR LOW WATER CONDITIONS AT MEAN LOW WATER OR THE DESIGN FLOOD DEPENDING UPON WHICH IS CRITICAL TO THE CALCULATIONS.
13. THIS STRUCTURE HAS BEEN DESIGNED IN ACCORDANCE WITH HEC 18, "EVALUATING SCOUR AT BRIDGES", MAY, 2001.

D. MATERIALS
1. CONCRETE:
   SPECIFIED DESIGN COMPRESSIVE STRENGTH (F'C)
   CLASS AA CONCRETE 4500 PSI
   LIGHTWEIGHT CONCRETE 4500 PSI

   THE CONCRETE IN THE BRIDGE DECK (BOTH CLASS AA AND SAND-LIGHTWEIGHT) SHALL CONTAIN FLY ASH OR GROUND GRANULATED BLAST FURNACE SLAG AT THE SUBSTITUTION RATE SPECIFIED IN ARTICLE 1024-1 AND IN ACCORDANCE WITH ARTICLES 1024-5 AND 1024-6 OF THE STANDARD SPECIFICATIONS. NO PAYMENT WILL BE MADE FOR THIS SUBSTITUTION AS IT IS CONSIDERED INCIDENTAL TO THE COST OF THE REINFORCED CONCRETE DECK SLAB.

   CLASS AA CONCRETE SHALL BE USED IN ALL CAST-IN-PLACE COLUMNS, WALLS, FLOOR SLABS, BENT CAPS, PILE CAPS, AND FOOTINGS, AND SHALL CONTAIN CALCIUM NITRITE CORROSION INHIBITOR.

   THE CONCRETE IN PIER 13 AND PIER 14 SHALL CONTAIN SILICA FUME UP TO EL. 4.00. SILICA FUME SHALL BE SUBSTITUTED FOR 5% OF THE PORTLAND CEMENT BY WEIGHT. IF THE OPTION OF ARTICLE 1024-1 OF THE STANDARD SPECIFICATIONS TO PARTIALLY SUBSTITUTE CLASS F FLY ASH FOR PORTLAND CEMENT IS EXERCISED, THEN THE RATE OF FLY ASH SUBSTITUTION SHALL BE REDUCED TO 1.0 LB OF FLY ASH PER 1.0 LB OF CEMENT. NO PAYMENT WILL BE MADE FOR THIS SUBSTITUTION AS IT IS CONSIDERED INCIDENTAL TO THE VARIOUS PAY ITEMS.

   CONCRETE COVER:
   4" BASCULE PIER FOOTINGS - TOP LAYER
   3" BASCULE PIER WALLS
   3" CONCRETE PLACED ABOVE DRILLED PIERS
   2½" CONCRETE DECK SLAB TOP REINFORCEMENT
   1¼" CONCRETE DECK SLAB BOTTOM REINFORCEMENT

   LIGHTWEIGHT CONCRETE - BASCULE SPAN DECK SLAB, RAILINGS AND SIDEWALK, AS NOTED.
   NORMAL WEIGHT CONCRETE - BASCULE SPAN PIERS, CONTROL HOUSE AND SIDEWALK AS NOTED.
   HEAVY WEIGHT CONCRETE - COUNTERWEIGHT CONCRETE

   THIS STRUCTURE CONTAINS THE NECESSARY CORROSION PROTECTION REQUIRED FOR A CORROSIVE SITE.
2. REINFORCING STEEL: AASHTO M31, GRADE 60 (FS) = 24000 PSI, EPOXY COATED.

   ALL BAR SUPPORTS USED IN THE (BARRIER RAIL, SIDEWALK, DECK, WALLS, FLOOR SLABS, BENT CAPS, COLUMNS, PILE CAPS, FOOTINGS) AND ALL INCIDENTAL REINFORCING STEEL SHALL BE EPOXY COATED IN ACCORDANCE WITH THE STANDARD SPECIFICATIONS.

   THE CONTRACTOR SHALL PROVIDE INDEPENDENT ASSURANCE SAMPLES OF REINFORCING STEEL AS FOLLOWS: FOR PROJECTS REQUIRING UP TO 400 TONS OF REINFORCING STEEL, ONE 30 INCH SAMPLE OF EACH SIZE BAR USED, AND FOR PROJECTS REQUIRING OVER 400 TONS OF REINFORCING STEEL, TWO 30 INCH SAMPLES OF EACH SIZE BAR USED. THE BARS FROM WHICH THE SAMPLES ARE TAKEN MUST THEN BE SPLICED WITH REPLACEMENT BARS OF THE SIZE AND LENGTH OF THE SAMPLE, PLUS A MINIMUM LAP SPLICE OF THIRTY BAR DIAMETERS.
3. STRUCTURAL STEEL: ALL STRUCTURAL STEEL SHALL BE AASHTO M270 GRADE 50 AND PAINTED IN ACCORDANCE WITH SYSTEM 1 OF ARTICLE 442-7 OF THE STANDARD SPECIFICATIONS UNLESS OTHERWISE NOTED ON THE PLANS.

   ALL METALLIZED SURFACES NOTED IN THE PLANS SHALL RECEIVE A SEAL COATING AS SPECIFIED IN THE SPECIAL PROVISION FOR THERMAL SPRAYED COATINGS (METALLIZATION).

E. SUPERSTRUCTURE DESIGN:
1. DESIGN METHOD: LOAD FACTOR DESIGN METHOD
2. STRUCTURE TYPE: DOUBLE LEAF TRUNNION BASCULE SPAN WITH STEEL PLATE GIRDERS AND STRINGERS, WITH AN 8-INCH LIGHTWEIGHT CONCRETE DECK.
3. CONCRETE SLAB: BASCULE SPAN SLAB SHALL BE DESIGNED USING THE AASHTO LOAD FACTOR DESIGN METHOD AND CHECKED FOR SERVICEABILITY. SLAB SHALL BE ONE COURSE CONSTRUCTION WITH THE USE OF REMOVABLE STEEL FORMS ONLY.
4. BASCULE GIRDERS: DESIGN IN ACCORDANCE WITH AASHTO LFD.
5. FATIGUE:
   STRUCTURAL STEEL SHALL BE DESIGNED FOR AASHTO FATIGUE CASE II.

   STRUCTURAL STEEL FOR THE BASCULE SPAN FLOORBEAMS AND STRINGERS SHALL BE DESIGNED FOR AASHTO STRESS CATEGORIES A, B & C FOR REDUNDANT LOAD PATH STRUCTURES.

   STRUCTURAL STEEL, FOR THE BASCULE GIRDERS, SHALL BE DESIGNED FOR AASHTO STRESS CATEGORIES A, B & C FOR NON-REDUNDANT LOAD PATH.
6. FRACTURE CONTROL PLAN:
   THE BASCULE GIRDERS (BG), TRUNNION COLUMNS/BEAMS, AND BASCULE SPAN FLOORBEAMS (FB) SHALL BE CONSIDERED TO BE FRACTURE CRITICAL. FRACTURE CRITICAL MEMBERS (FCM'S) SHALL CONFORM TO THE PROVISIONS OF THE LATEST EDITION OF ANSI/AASHTO/AWS D1.5 BRIDGE WELDING CODE, SECTION 12 FRACTURE CRITICAL PLAN FOR NON-REDUNDANT MEMBERS.

F. SUBSTRUCTURE DESIGN
1. DESIGN METHOD: LOAD FACTOR DESIGN METHOD
2. BASCULE PIERS 13 AND 14: CONVENTIONAL CANTILEVER WALL
3. BASCULE PIERS 13 AND 14 ARE NOT DESIGNED FOR VESSEL IMPACT.
4. THE SUBSTRUCTURE OF THE EXISTING BRIDGE INDICATED ON THE PLANS IS FROM THE BEST INFORMATION AVAILABLE. SINCE THIS INFORMATION IS SHOWN FOR THE CONVENIENCE OF THE CONTRACTOR, THE CONTRACTOR SHALL HAVE NO CLAIM WHATSOEVER AGAINST THE DEPARTMENT OF TRANSPORTATION FOR ANY DELAYS OR ADDITIONAL COST INCURRED BASED ON DIFFERENCES BETWEEN THE EXISTING BRIDGE SUBSTRUCTURE SHOWN ON THE PLANS AND THE ACTUAL CONDITIONS AT THE PROJECT SITE.

G. FOUNDATION
1. DESIGN METHOD: ALLOWABLE STRESS DESIGN METHOD
2. DRILLED PIERS: DIAMETER 3'-6"
3. SEALS:
   COFFERDAMS AND SEALS SHALL BE DESIGNED FOR A HYDROSTATIC HEAD FROM THE BOTTOM OF THE SEAL TO THE NORMAL HIGH WATER ELEVATION, EL. +2.00. THE CONTRACTOR SHALL BE RESPONSIBLE FOR THE DESIGN OF THE SHEET PILE COFFERDAM, SEE SECTION 410-4 OF THE STANDARD SPECIFICATION. THE SHEET PILE COFFERDAMS SHALL BE REMOVED AFTER CONSTUCTION OF THE PIERS ARE COMPLETE, AS A MINIMUM THE SHEET PILES SHALL BE REMOVED TO TOP OF SEAL. TOTAL COST OF COFFERDAM CONSTRUCTION SHALL BE INCLUDED IN THE PAY ITEM FOR FOUNDATION EXCAVATION AT THE BASCULE PIER. STEEL SHEET PILING SHALL BE HOT-ROLLED.

H. MISCELLANEOUES NOTES
1. REMOVAL OF THE EXISTING BRIDGE SHALL BE PERFORMED SO AS NOT TO ALLOW DEBRIS TO FALL INTO THE WATER. THE CONTRACTOR SHALL REMOVE THE BRIDGE AND SUBMIT PLANS FOR DEMOLITION IN ACCORDANCE WITH ARTICLE 402-2 OF THE STANDARD SPECIFICATIONS.
2. FOR SUBMITTAL OF WORKING DRAWINGS, SEE SPECIAL PROVISIONS.
3. FOR FALSEWORK AND FORMWORK, SEE SPECIAL PROVISIONS.
4. FOR CRANE SAFETY, SEE SPECIAL PROVISIONS.
5. COFFERDAMS SHALL NOT BE DEWATERED WHEN THE WATER ELEVATION IS ABOVE EL. 0.500.
6. FOR UTILITY INFORMATION, SEE UTILITY PLANS AND SPECIAL PROVISIONS.
7. FOR MAINTENANCE AND PROTECTION OF TRAFFIC BENEATH PROPOSED STRUCTURE, SEE SPECIAL PROVISIONS.
8. FOR SECURING OF VESSELS, SEE SPECIAL PROVISIONS.
9. IN AS MUCH AS THE PAINT SYSTEM ON THE EXISTING STRUCTURAL STEEL CONTAINS LEAD, THE CONTRACTOR'S ATTENTION IS DIRECTED TO ARTICLE 107-1 OF THE STANDARD SPECIFICATIONS. ANY COSTS RESULTING FROM COMPLIANCE WITH APPLICABLE STATE OR FEDERAL REGULATIONS PERTAINING TO HANDLING OF MATERIALS CONTAINING LEAD BASED PAINT SHALL BE INCLUDED IN THE BID PRICE FOR "REMOVAL OF EXISTING STRUCTURE AT STATION 31+21.29 -L-."
10. FOR OTHER DESIGN DATA AND GENERAL NOTES, SEE SHEET SN.

PROJECT NO. B-2532
CRAVEN COUNTY
STATION: 31+21.29 -L-

NORTH CAROLINA PROFESSIONAL ENGINEER SEAL 12916 PAUL J. BARBER 2/3/07

STATE OF NORTH CAROLINA
DEPARTMENT OF TRANSPORTATION
RALEIGH, NC

BASCULE SPAN "N"
GENERAL NOTES

HNTB NORTH CAROLINA, P.C.
343 E. Six Forks Rd., Suite 200, Raleigh, N.C. 27609

DRAWN BY SL DATE 10/06
CHECKED BY JN DATE 10/06
DWG. NO. B104

REVISIONS					
NO.	BY	DATE	NO.	BY	DATE
1			3		
2			4		

SHEET NO. S-125
TOTAL SHEETS 348

TOTAL BILL OF MATERIALS - STRUCTURAL - BASCULE SPAN ONLY

ITEM	FOUNDATION EXCAVATION FOR BENT 13 AT STA. 31+21.29 -L-	FOUNDATION EXCAVATION FOR BENT 14 AT STA. 31+21.29 -L-	3'-6" DIAMETER DRILLED PIERS (SP)	4'-0" DIAMETER DRILLED PIERS (SP)	PERMANENT STEEL CASING FOR 3'-6" DIA. DRILLED PIER	PERMANENT STEEL CASING FOR 4'-0" DIA. DRILLED PIER	SID INSPECTION	SPT TESTING	CROSSHOLE SONIC LOGGING	REINFORCED CONCRETE DECK SLAB (SAND LIGHTWEIGHT CONCRETE)	GROOVING BRIDGE FLOORS	CLASS AA CONCRETE
LOCATION / UNIT	LS	LS	LF	LF	LF	LF	EA	EA	EA	SF	SF	CY
SUPERSTRUCTURE, SOUTH BASCULE SPAN "N"	N/A	N/A	N/A	N/A	N/A	N/A	N/A	N/A	N/A	3,536	2,501	N/A
SUPERSTRUCTURE, NORTH BASCULE SPAN "N"	N/A	N/A	N/A	N/A	N/A	N/A	N/A	N/A	N/A	3,536	2,501	N/A
SOUTH BASCULE PIER 13	1	N/A	928	N/A	320	N/A	TBD	TBD	TBD	N/A	N/A	1,034
NORTH BASCULE PIER 14	N/A	1	1,160	N/A	400	N/A	TBD	TBD	TBD	N/A	N/A	1,060
FENDER SYSTEM	N/A	N/A	N/A	1,368	N/A	744	N/A	N/A	N/A	N/A	N/A	1,016
TOTAL	LS	LS	2,088	1,368	720	744	12	11	3	7,072	5,002	3,110

TOTAL BILL OF MATERIALS - STRUCTURAL - BASCULE SPAN ONLY

ITEM	CLASS AA CONCRETE, WHITE	CLASS S CONCRETE (SEAL)	EPOXY COATED REINFORCING STEEL	EPOXY COATED SPIRAL COLUMN REINFORCING STEEL	APPROX. 1,002,527 LBS STRUCTURAL STEEL	COUNTERWEIGHT CONCRETE, HEAVY WEIGHT	PIER ACCESS WAYS	BALANCE BLOCKS, CAST IRON	PIER PROTECTION FENDERING (2)	CLASSIC CONCRETE BRIDGE RAIL	CLASSIC CONCRETE BRIDGE RAIL (SAND LIGHTWEIGHT)	BIRD PROTECTION
LOCATION / UNIT	CY	CY	LBS	LBS	LS	CY	LS	EA	LS	LF	LF	LS
SUPERSTRUCTURE, SOUTH BASCULE SPAN "N"	N/A	N/A	1,417	N/A	LS	156	N/A	471	N/A	62	98	N/A
SUPERSTRUCTURE, NORTH BASCULE SPAN "N"	N/A	N/A	1,417	N/A	LS	156	N/A	530	N/A	98	98	N/A
SOUTH BASCULE PIER 13	N/A	704	260,639	17,629	LS	N/A	1	95	N/A	78	N/A	1
NORTH BASCULE PIER 14	74	762	301,988	22,037	LS	N/A	1	106	N/A	22	N/A	1
FENDER SYSTEM	N/A	N/A	223,216	35,948	N/A	N/A	N/A	N/A	1	N/A	N/A	N/A
TOTAL	74	1,466	788,677	75,614	LS	312	LS	1,202	LS	260	196	LS

TOTAL BILL OF MATERIALS - ELECTRICAL

ITEM	RACEWAY AND WIRING	BRIDGE ELECTRICAL UTILITIES	STANDBY GENERATOR	ROADWAY LIGHTING	TRAFFIC SIGNAL ASSEMBLIES	DRAWBRIDGE AHEAD SIGNS	WARNING GATES	BARRIER GATES	CONTROL HOUSE AND PIER ELECTRICAL WORK	BRIDGE CONTROL SYSTEM	SUBMARINE CABLES	LIGHTNING PROTECTION SYSTEM	STARTUP SERVICES
UNIT	LS	LS	LS	LS	LS	LS	LS	LS	LS	LS	LS	LS	LS
TOTAL	1	1	1	1	1	1	1	1	1	1	1	1	1

TOTAL BILL OF MATERIALS - MECHANICAL

ITEM	BRIDGE HVAC	OPERATION AND MAINTENANCE MANUALS, LUBRICATION CHART, AND TRAINING	SPAN DRIVE MACHINERY	SPAN LOCK MACHINERY	SUMP PUMP SYSTEMS	TRUNNION ASSEMBLIES	BASCULE PIER WATER AND SEWER
UNIT	LS	LS	LS	LS	LS	LS	LS
TOTAL	1	1	1	1	1	1	1

BILL OF MATERIALS - CONTROL HOUSE / ELECTRICAL ROOM

CONTROL HOUSE / ELECTRICAL ROOM - ARCHITECTURAL / GENERAL CONSTRUCTION	CONTROL HOUSE / ELECTRICAL ROOM - STRUCTURE	CONTROL HOUSE PLUMBING
LS	LS	LS
1	1	1

PROJECT NO. B-2532

CRAVEN COUNTY

STATION: 31+21.29 -L-

NOTES:

1. THE PAY ITEMS AND QUANTITIES SHOWN IN THE ABOVE BILL OF MATERIAL ARE FOR THE BASCULE SPAN AND FENDER CONSTRUCTION AS INDICATED. THESE QUANTITIES ARE IN ADDITION TO THE PAY ITEMS AND QUANTITIES REFLECTED IN THE BRIDGE APPROACH SPAN AND RETAINING WALL BILL OF MATERIAL. SEE THE APPROACH SPAN DRAWINGS (VOLUME 1) TOTAL BILL OF MATERIAL FOR THE FOLLOWING PAY ITEMS FOR THE ENTIRE STRUCTURE INCLUDING THE BASCULE CONSTRUCTION: CONSTRUCTION, MAINTENANCE AND REMOVAL OF TEMPORARY ACCESS AT STATION 31+21.29 -L-, REMOVAL OF EXISTING STRUCTURE AT STATION 31+21.29 -L-. IN ADDITION, THE FENDER PAY ITEM QUANTITIES FOR SID INSPECTION, SPT TESTING, AND CROSSHOLE SONIC LOGGING INVOLVING 4'-0" DIAMETER DRILLED PIERS ARE IN THE APPROACH SPAN BILL OF MATERIAL AND ARE NOT INCLUDED HERE.

2. THE CONTROL HOUSE STRUCTURAL STEEL SHALL BE INCLUDED IN THE PAY ITEM FOR CONTROL HOUSE / ELECTRICAL ROOM - STRUCTURE.

NORTH CAROLINA PROFESSIONAL SEAL 12916 ENGINEER PAUL J. BARBER 10/20/06

STATE OF NORTH CAROLINA
DEPARTMENT OF TRANSPORTATION
RALEIGH, NC

BASCULE SPAN "N"
TOTAL BILL OF MATERIALS

HNTB NORTH CAROLINA, P.C.
343 E. Six Forks Rd., Suite 200, Raleigh, N.C. 27609

DRAWN BY PE DATE 10/06
CHECKED BY GT DATE 10/06

DWG. NO. B105

REVISIONS						SHEET NO.
NO.	BY	DATE	NO.	BY	DATE	S-126
1			3			TOTAL SHEETS
2			4			348

BILL OF MATERIALS - PIER FOOTING

LOCATION	CLASS AA CONCRETE, FOOTINGS (CY)	REINFORCING STEEL, EPOXY COATED FOOTINGS (LBS)
PIER 13	328.2	75,696
PIER 14	360.3	79,572

SUMMARY OF QUANTITIES CLASS AA CONCRETE

POUR	CUBIC YARDS (CY)
PIER 13 FOOTING	
① (1'-6")	123.3
② (1'-6")	123.3
③ (1'-0")	81.6
PIER 14 FOOTING	
① (1'-6")	135.3
② (1'-6")	135.3
③ (1'-0")	89.7

NOTE: FOR SECTION OF FOOTING SHOWING SUGGESTED POURS SEE DWG. 107

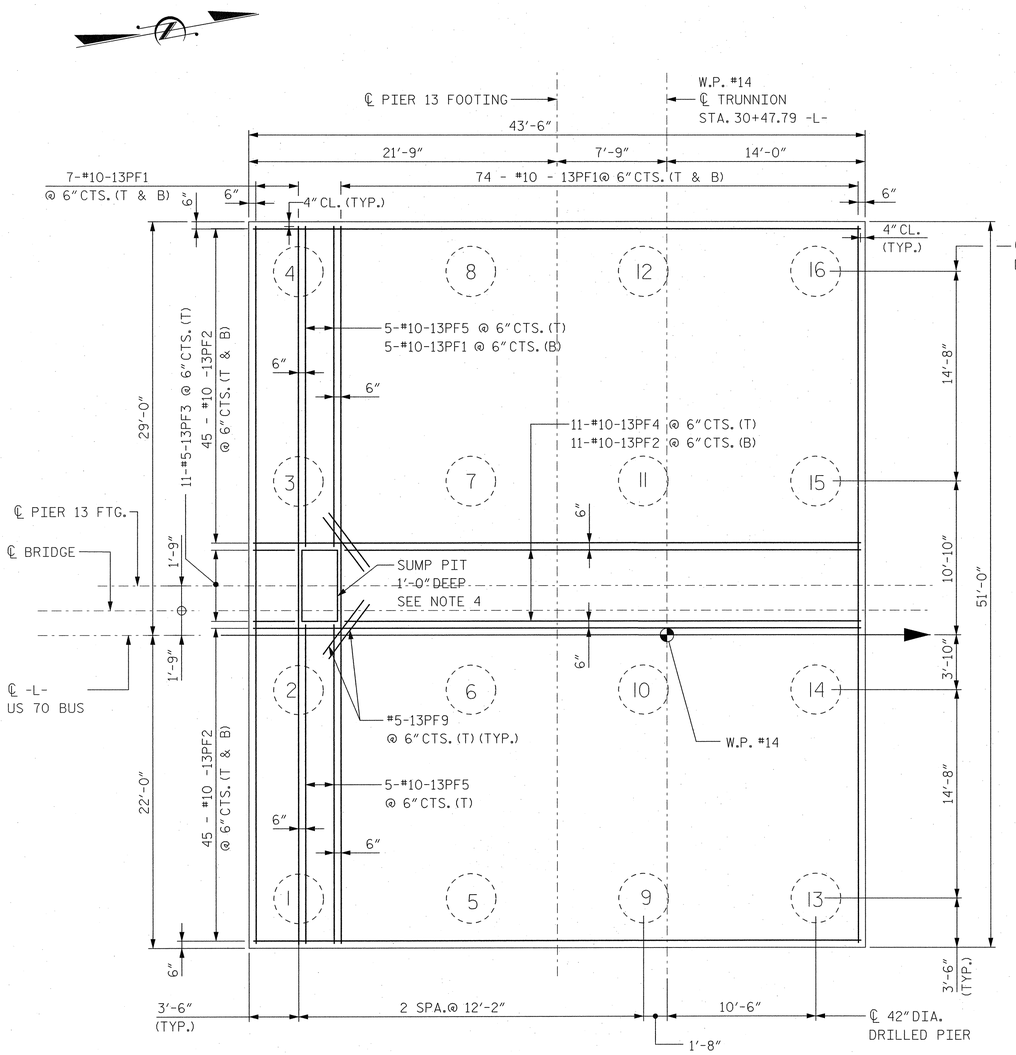

SOUTH BASCULE PIER 13 - FOOTING PLAN

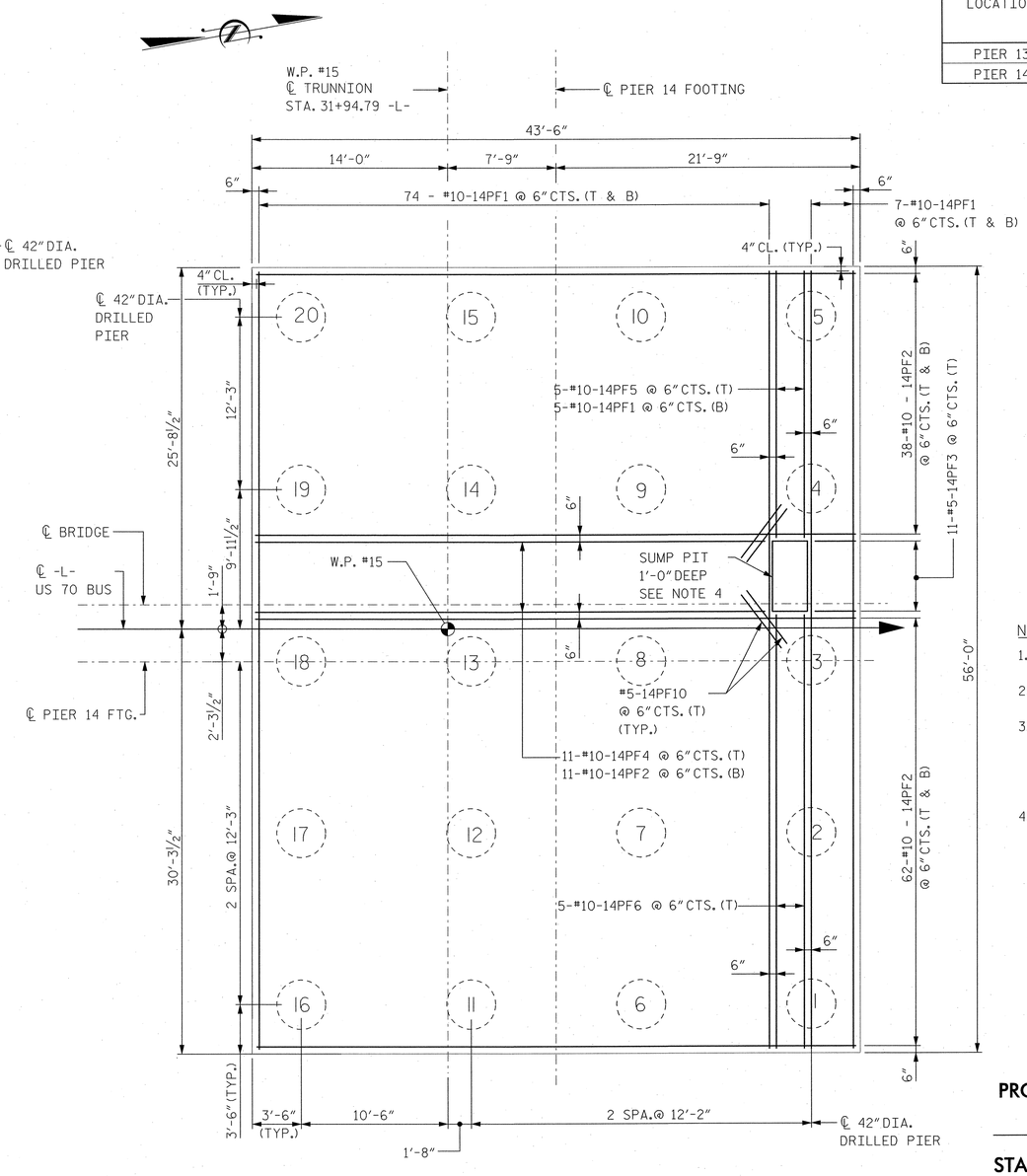

NORTH BASCULE PIER 14 - FOOTING PLAN

NOTES:

1. FOR GENERAL NOTES, SEE DWG. B104.
2. FOR DRILLED PIER DETAILS, SEE DWG. B107.
3. OUTLINE OF PIER WALLS NOT SHOWN FOR CLARITY. FOR PIER 13 AND 14 LAYOUT AT FOOTING LEVEL, SEE DWGS. B108 AND B122, RESPECTIVELY.
4. FOR ADDITIONAL REINFORCEMENT AT SUMP PIT, SEE SECTION A-A ON DWGS. B109 AND B123.

PROJECT NO. B-2532

CRAVEN COUNTY

STATION: 31+21.29 -L-

BAR TYPES

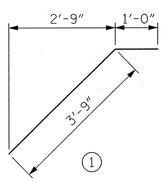

ALL BAR DIMENSIONS ARE OUT TO OUT

REINFORCING BAR SCHEDULE

PIER 13 FOOTING						PIER 14 FOOTING					
MARK	NO.	SIZE	TYPE	LENGTH	WEIGHT	MARK	NO.	SIZE	TYPE	LENGTH	WEIGHT
13PF1	167	10	STR	50'-4"	36,289	14PF1	167	10	STR	55'-4"	39,882
13PF2	191	10	STR	42'-10"	35,341	14PF2	211	10	STR	42'-10"	35,341
13PF3	11	5	STR	3'-2"	37	14PF3	11	5	STR	3'-2"	37
13PF4	11	10	STR	39'-2"	1,858	14PF4	11	10	STR	39'-2"	1,858
13PF5	10	10	STR	22'-5"	968	14PF5	5	10	STR	18'-10"	407
13PF6	18	9	STR	11'-0"	673	14PF6	5	10	STR	39'-2"	844
13PF7	22	9	STR	9'-0"	673	14PF7	18	9	STR	11'-0"	673
13PF8	22	5	1	4'-9"	109	14PF8	22	9	STR	9'-0"	673
13PF9	4	5	STR	3'-0"	13	14PF9	22	5	1	4'-9"	109
						14PF10	4	5	STR	3'-0"	13

NORTH CAROLINA PROFESSIONAL SEAL 12916 ENGINEER PAUL J. BARBER 10/20/06

HNTB NORTH CAROLINA, P.C.
343 E. Six Forks Rd., Suite 200, Raleigh, N.C. 27609

DRAWN BY SPL DATE 10/06
CHECKED BY JN DATE 10/06
DWG. NO. B106

REVISIONS						SHEET NO.
NO.	BY	DATE	NO.	BY	DATE	S-127
1			3			TOTAL SHEETS
2			4			345

STATE OF NORTH CAROLINA
DEPARTMENT OF TRANSPORTATION
RALEIGH, NC

BASCULE PIER 13 AND 14 FOOTING PLANS

s/fn: JT W10280
10/20/2006 10:40
J:\cadd\42873 - Alfred Cunningham\DGN\100% Submission\B2532_SD_B106_Ftgplans.dgn

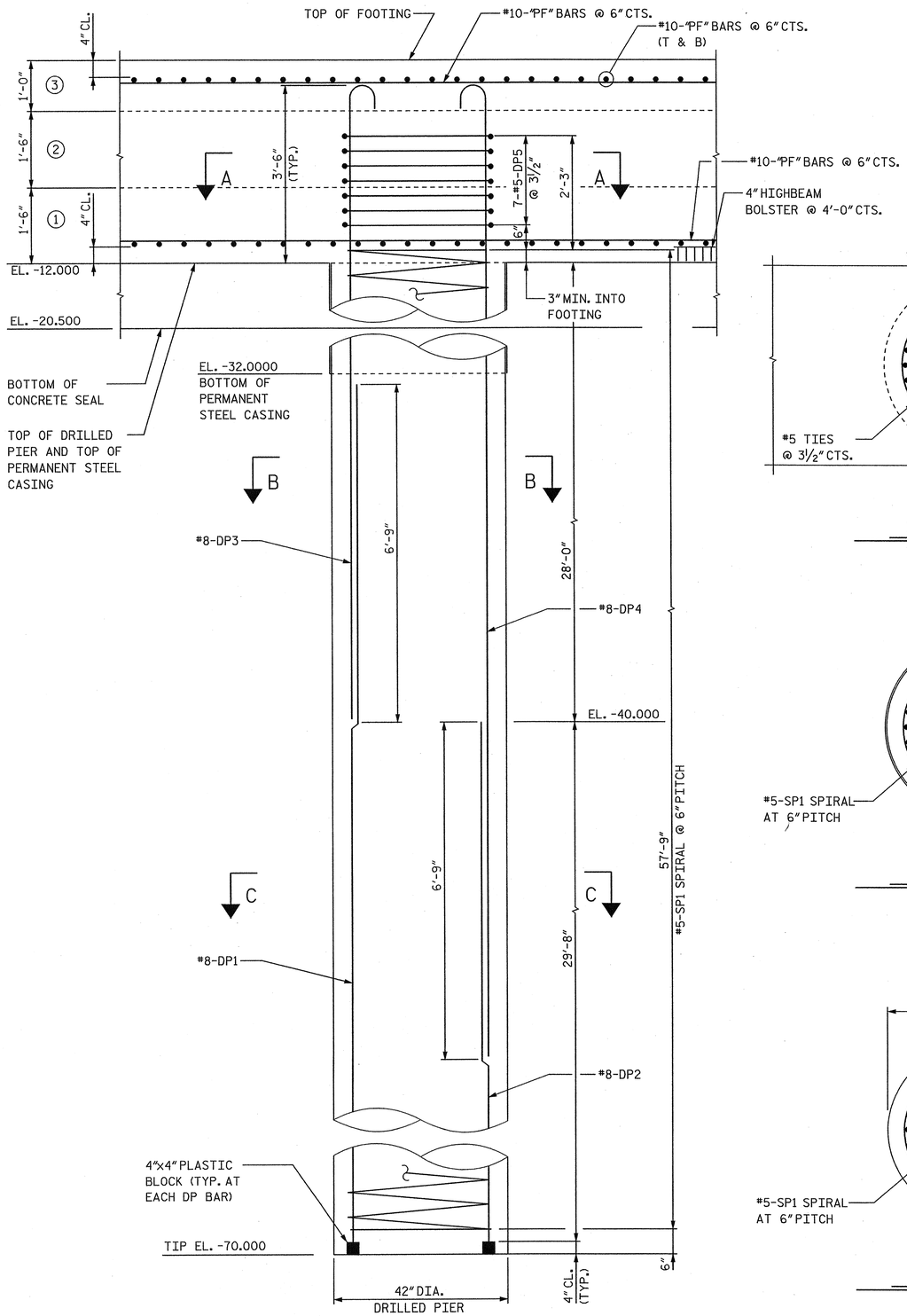

DRILLED PIER REINFORCEMENT DETAIL

TRANSVERSE SECTION LOOKING EAST OR WEST

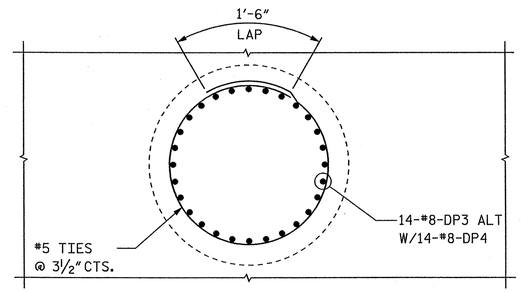

SECTION A-A

AT FOOTING

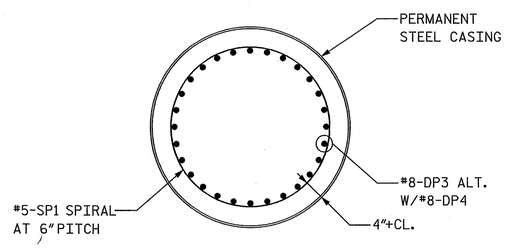

SECTION B-B

AT STEEL CASING

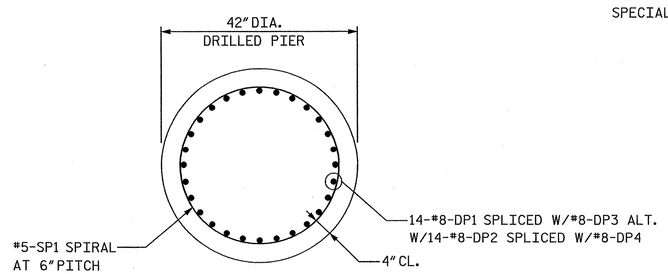

SECTION C-C

BAR TYPES

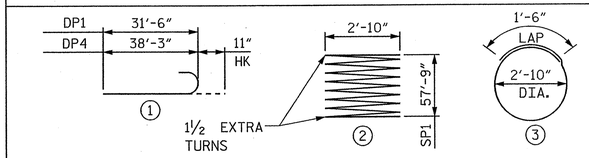

ALL BAR DIMENSIONS ARE OUT TO OUT

REINFORCING BAR SCHEDULE

MARK	NO.	SIZE	TYPE	LENGTH	WEIGHT
DP1	504	#8	STR	36'-5"	49,005
DP2	504	#8	STR	29'-8"	39,922
DP3	504	#8	1	32'-4"	43,510
DP4	504	#8	1	39'-1"	52,594
DP5	252	#5	3	10'-5"	2,738
SP1	36	#5	2	1056'-5"	39,666

BILL OF MATERIALS - DRILLED PIERS

LOCATION	3'-6" DIAMETER DRILLED PIER (SP) (LF)	PERMANENT STEEL CASING 3'-6" DIA. (LF)	REINFORCING STEEL, EPOXY COATED DRILLED PIER (LBS)	REINFORCING STEEL, EPOXY COATED SPIRAL (LBS)	SPT (EA)	SID INSPECTION (EA)	CROSSHOLE SONIC LOGGING (PER DRILLED PIER) (EA)
PIER 13	928	320	83,453	17,629	-	-	-
PIER 14	1,160	400	104,316	22,037	-	-	-
TOTAL	2,088	720	187,769	39,666	12	11	3

SUMMARY OF QUANTITIES DRILLED PIER CONCRETE

POUR	CUBIC YARDS (CY)
PER DRILLED PIER	20.7
TOTAL PIER 13	330.7
TOTAL PIER 14	413.4

NOTES:

1. FOR DRILLED PIER LAYOUT PLANS OF BASCULE PIERS 13 AND 14, SEE FOOTING PLANS ON DWG. B106.
2. ALL REINFORCING STEEL SHALL BE EPOXY COATED.
3. CLASS AA, 4500 PSI CONCRETE SHALL BE USED FOR THE FOOTING. DRILLED PIER, 4500 PSI CONCRETE SHALL BE USED FOR THE DRILLED PIERS.
4. DRILLED PIERS AT PIER 13 ARE DESIGNED FOR AN APPLIED LOAD OF 190 TONS EACH AT THE TOP OF THE COLUMN.
5. DRILLED PIERS AT PIER 14 ARE DESIGNED FOR AN APPLIED LOAD OF 160 TONS EACH AT THE TOP OF THE COLUMN.
6. PERMANENT STEEL CASING IS REQUIRED FOR DRILLED PIERS AT PIERS 13 AND 14. DO NOT EXTEND STEEL CASING BELOW ELEVATION -32 FT. FOR PIERS 13 AND 14. SEE DRILLED PIERS SPECIAL PROVISION.
7. INSTALL PERMANENT STEEL CASING AT PIERS 13 AND 14 BY VIBRATING, SCREWING OR DRIVING THE CASING BEFORE EXCAVATION OR DISTURBING ANY MATERIAL BELOW ELEVATION -25 FT. FOR PIERS 13 AND 14.
8. DRILLED PIER CASINGS FOR PIERS 13 AND 14 FOUNDATIONS DO NOT NEED TO BE METALLIZED.
9. DRILLED PIERS AT PIERS 13 AND 14 SHALL EXTEND TO AN ELEVATION NO HIGHER THAN -70 FT. AND SATISFY THE REQUIRED END BEARING CAPACITY.
10. THE SCOUR CRITICAL ELEVATION FOR PIERS 13 AND 14 IS ELEVATION -40 FT. SCOUR CRITICAL ELEVATIONS ARE USED TO MONITOR POSSIBLE SCOUR PROBLEMS DURING THE LIFE OF THE STRUCTURE.
11. SLURRY CONSTRUCTION IS REQUIRED FOR DRILLED PIERS AT PIERS 13 AND 14, SEE DRILLED PIER SPECIAL PROVISION.
12. SID INSPECTIONS MAY BE REQUIRED TO INSPECT THE BOTTOM CLEANLINESS OF THE DRILLED PIERS AT PIERS 13 AND 14, SEE DRILLED PIERS SPECIAL PROVISION.
13. CSL TUBES ARE REQUIRED AND CSL TESTING MAY BE REQURIED FOR THE DRILLED PIERS. THE ENGINEER WILL DETERMINE THE NEED FOR CSL TESTING. SEE CROSSHOLE SONIC LOGGING SPECIAL PROVISION.
14. FOR DRILLED PIERS, SEE DRILLED PIERS SPECIAL PROVISION.
15. DRILLED PIERS AT PIERS 13 AND 14 ARE DESIGNED FOR BOTH SKIN FRICTION AND END BEARING. CHECK FIELD CONDITIONS FOR THE REQUIRED END BEARING CAPACITY OF 30 TSF.
16. SPT TESTING MAY BE REQUIRED TO DETERMINE THE END BEARING REQUIREMENT OF THE DRILLED PIERS AT PIERS 13 AND 14. THE ENGINEER WILL DETERMINE THE NEED FOR SPT TESTING. SEE DRILLED PIERS SPECIAL PROVISION.
17. FOR MONITORING VIBRATIONS, SEE ROADWAY PLANS AND CONTROL OF VIBRATION SPECIAL PROVISION.

PROJECT NO. B-2532

CRAVEN COUNTY

STATION: 31+21.29 -L-

NORTH CAROLINA PROFESSIONAL ENGINEER SEAL 12916 PAUL J. BARBER 12/7/06

STATE OF NORTH CAROLINA
DEPARTMENT OF TRANSPORTATION
RALEIGH, NC

BASCULE PIERS 13 AND 14
DRILLED PIER DETAILS

HNTB NORTH CAROLINA, P.C.
343 E. Six Forks Rd., Suite 200, Raleigh, N.C. 27609

DRAWN BY DS DATE 10/06
CHECKED BY JN DATE 10/06

DWG. NO. B107

REVISIONS						SHEET NO.
NO.	BY	DATE	NO.	BY	DATE	S-128
1			3			TOTAL SHEETS
2			4			348

slam 01-DEC-2006 15:05 AT NYOD111
J:\cadd\42673 - Alfred Cunningham\DGN\100% Submission\B2532_SD_B107_Drillednier.dgn

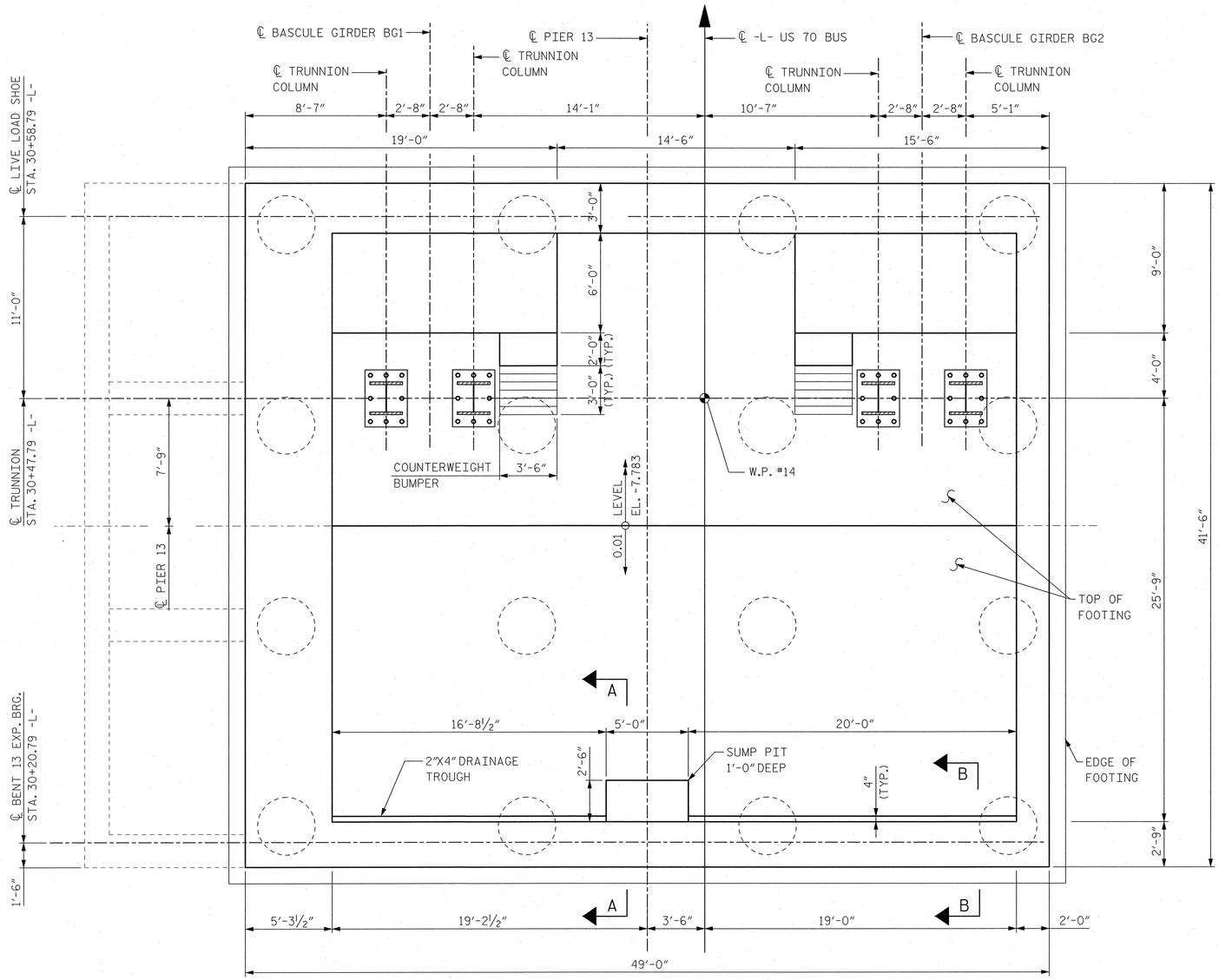

PIER 13 FLOOR LEVEL PLAN

AT TOP OF FOOTING

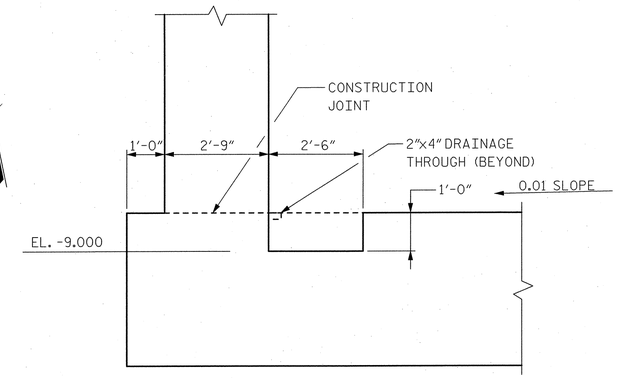

SECTION A-A

AT SUMP PIT

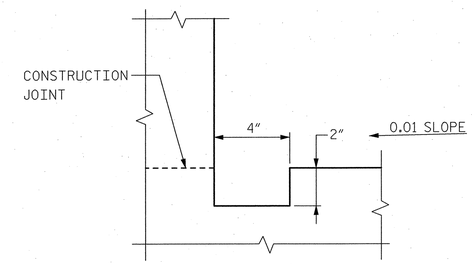

SECTION B-B

AT DRAINAGE TROUGH

NOTES:

1. TOP OF FOOTING SHALL BE SLOPED ⅛"/FT MIN. AS SHOWN TO PROVIDE DRAINAGE TO SUMP PIT.
2. FOR TRUNNION SUPPORT DETAILS, SEE DWGS. B156 AND B157.
3. FOR BUMPER BLOCK DETAILS, SEE DWG. B121.
4. FOR FOOTING AND DRILLED PIER LAYOUT PLAN, SEE DWG. B106.
5. FOR PIER 13 FLOOR LEVEL REINFORCEMENT DETAILS, SEE DWG. B109.

PROJECT NO. B-2532

CRAVEN COUNTY

STATION: 31+21.29 -L-

NORTH CAROLINA PROFESSIONAL SEAL 12916 ENGINEER PAUL J. BARBER 10/29/06

STATE OF NORTH CAROLINA
DEPARTMENT OF TRANSPORTATION
RALEIGH, NC

SOUTH BASCULE PIER 13
FLOOR LEVEL PLAN

HNTB NORTH CAROLINA, P.C.
343 E. Six Forks Rd., Suite 200, Raleigh, N.C. 27609

DRAWN BY SPL DATE 10/06
CHECKED BY SL DATE 10/06

DWG. NO. B108

REVISIONS						SHEET NO.
NO.	BY	DATE	NO.	BY	DATE	S-129
1			3			TOTAL SHEETS
2			4			348

jlile JT N10073
10/OCT/06 10:07
J:\cadd\42873 - Alfred Cunningham\DGN\100X Submission\B2532_SD_B108_P13Floorplan.dgn

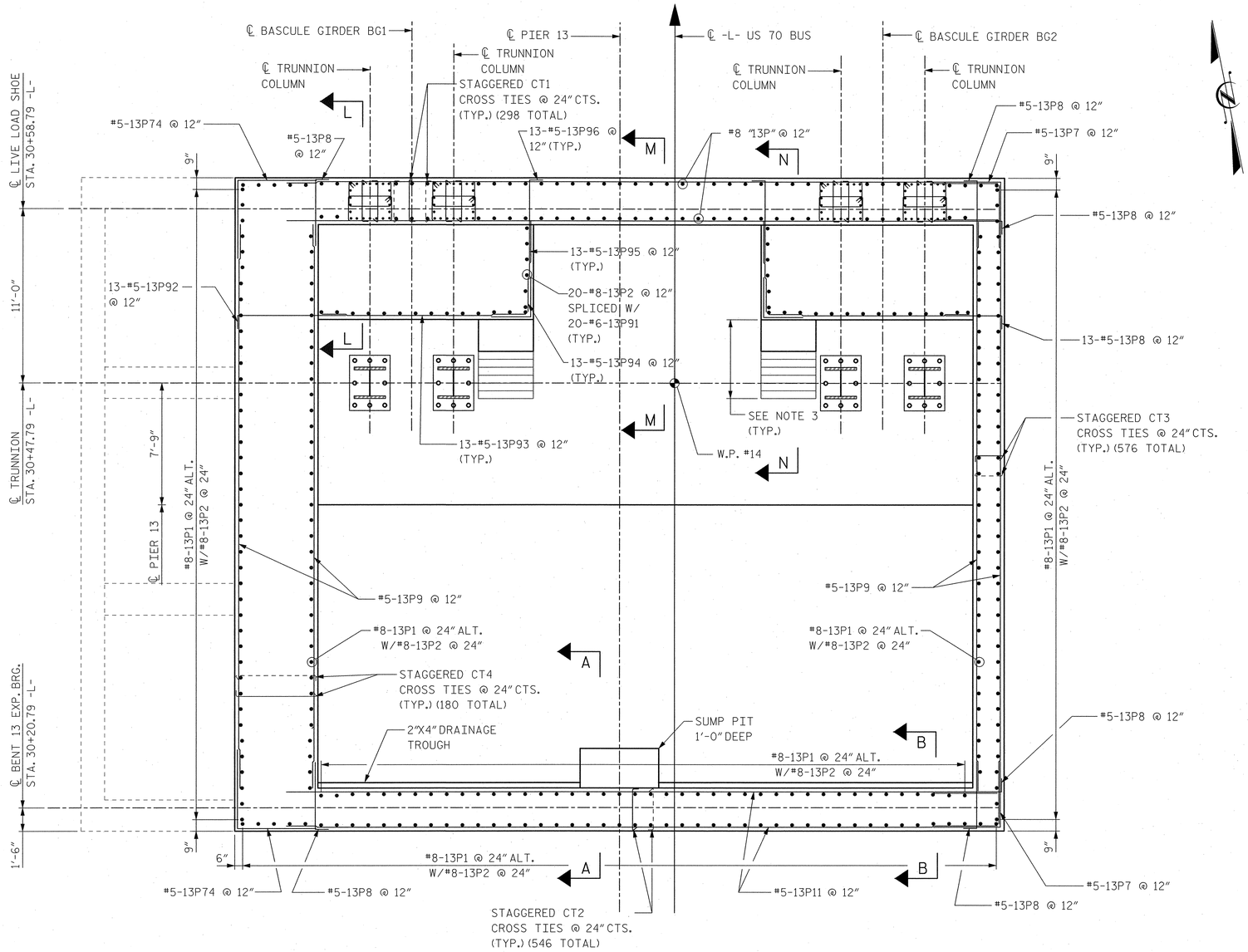

PIER 13 FLOOR LEVEL REINFORCEMENT PLAN

AT TOP OF FOOTING

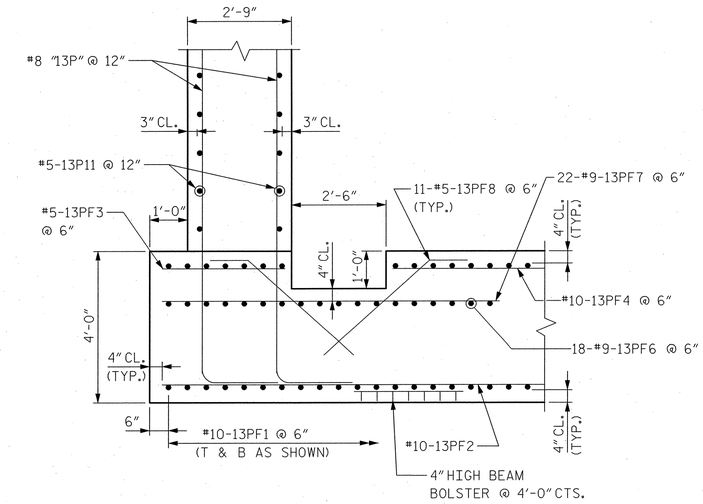

SECTION A-A

AT SUMP PIT

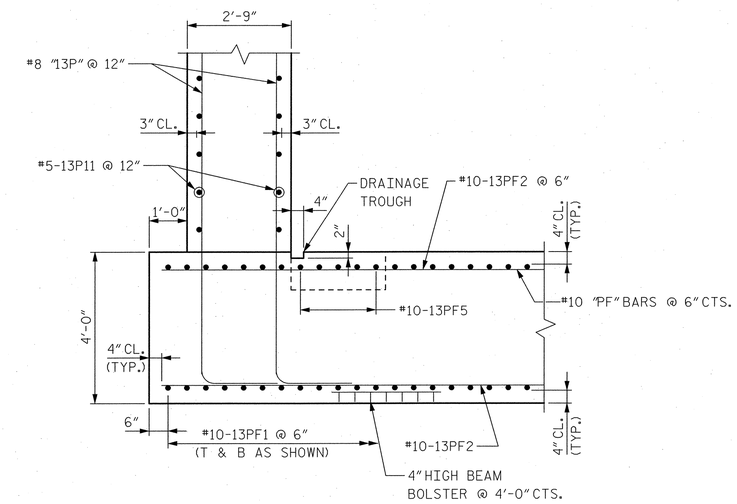

SECTION B-B

AT DRAINAGE TROUGH

PROJECT NO. B-2532

CRAVEN **COUNTY**

STATION: 31+21.29 -L-

NOTES:

1. FOR GENERAL PLAN OF PIER 13 FLOOR LEVEL, SEE DWG. B108.
2. FOR FOOTING REINFORCEMENT AND DRILLED PIER LAYOUT PLAN, SEE DWG. B106.
3. FOR BUMPER BLOCK REINFORCEMENT DETAILS, SEE DWG. B121.
4. FOR PIER 13 BAR LISTS AND BILL OF MATERIALS, SEE DWGS. B193 AND B194.
5. FOR SCHEMATIC DIAGRAM OF CROSS TIE LOCATIONS, SEE DWG. B114.

NORTH CAROLINA PROFESSIONAL SEAL 12916 ENGINEER PAUL J. BARBER 10/20/06

STATE OF NORTH CAROLINA
DEPARTMENT OF TRANSPORTATION
RALEIGH, NC

SOUTH BASCULE PIER 13
FLOOR LEVEL
REINFORCEMENT PLAN

HNTB NORTH CAROLINA, P.C.
343 E. Six Forks Rd., Suite 200, Raleigh, N.C. 27609

DRAWN BY SPL DATE 10/06
CHECKED BY SL DATE 10/06

DWG. NO. **B109**

REVISIONS						SHEET NO.
NO.	BY	DATE	NO.	BY	DATE	S-130
1			3			TOTAL SHEETS
2			4			348

Date: 10/20/2006
User: barber
JCadd/4.06F3 - Alfred Cunningham\DGN\1003_Submission\B2532_SD_B109_P13FrpIonrebar.dgn

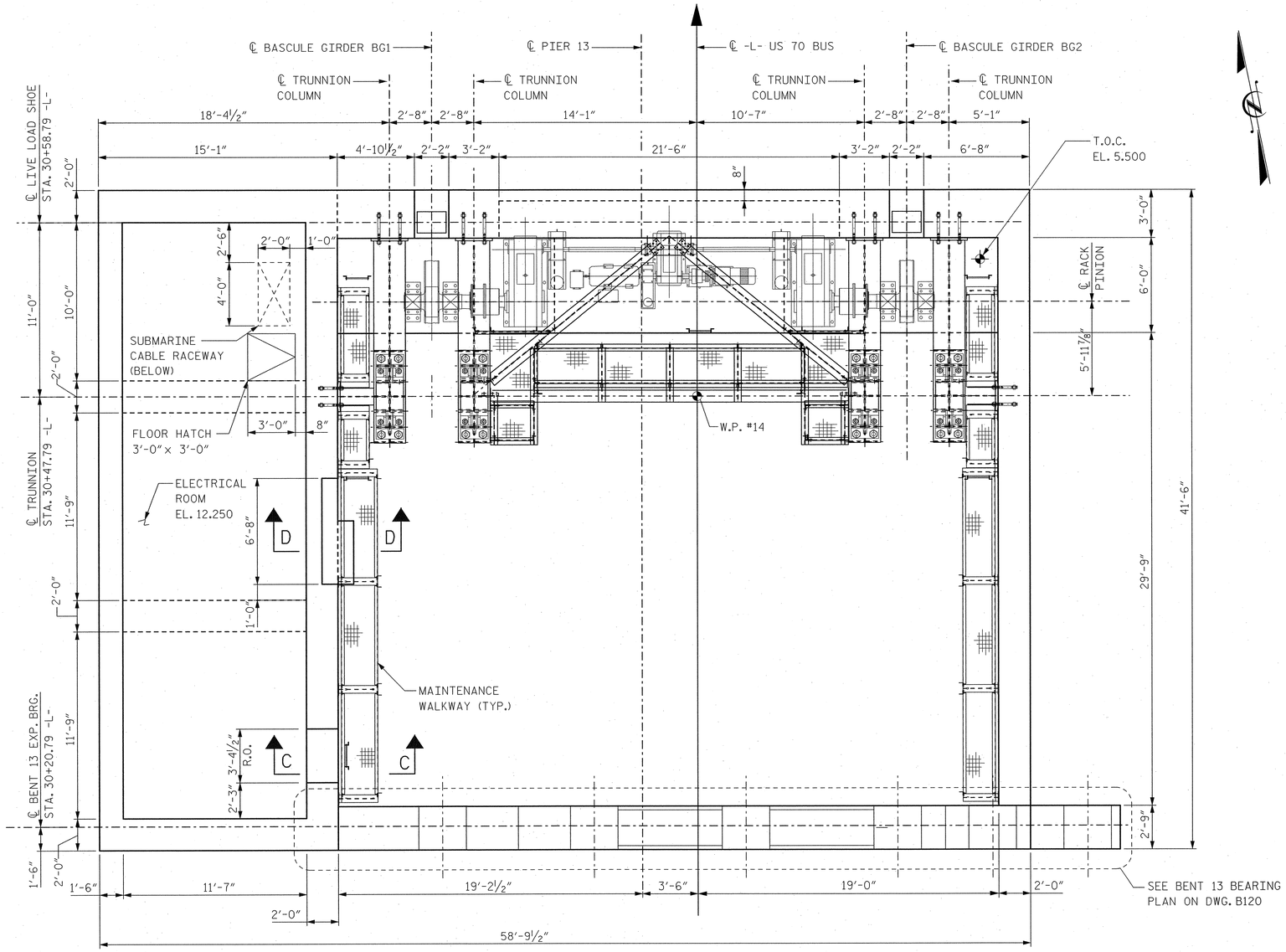

PIER 13 TRUNNION SUPPORT LEVEL PLAN

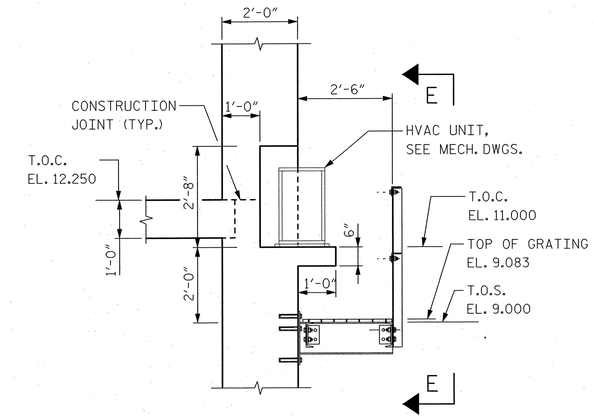

SECTION D-D

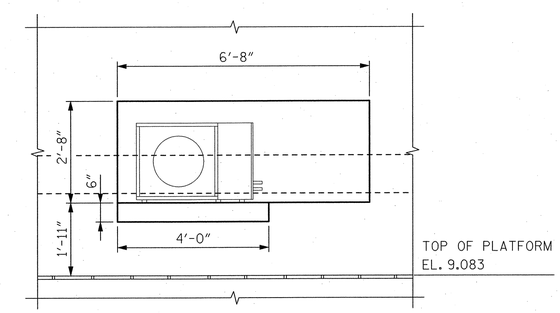

SECTION E-E

SECTION C-C

NOTES:

1. FOR TRUNNION SUPPORT DETAILS, SEE DWGS. B156 AND B157.
2. FOR LIVE LOAD SHOE DETAILS, SEE DWG. B179.
3. FOR APPROACH SPAN BENT 13 BEARING DETAILS, SEE DWG. B120.
4. FOR MAINTENANCE WALKWAYS, LADDER, AND RAILING DETAILS, SEE DWGS. B136 TO B139.
5. FOR PIER 13 TRUNNION SUPPORT LEVEL REINFORCEMENT DETAILS, SEE DWG. B111.

PROJECT NO. B-2532

CRAVEN COUNTY

STATION: 31+21.29 -L-

STATE OF NORTH CAROLINA
DEPARTMENT OF TRANSPORTATION
RALEIGH, NC

SOUTH BASCULE PIER 13
TRUNNION SUPPORT
LEVEL PLAN

NORTH CAROLINA PROFESSIONAL SEAL 12916 ENGINEER PAUL J. BARBER 10/12/06

HNTB NORTH CAROLINA, P.C.
343 E. Six Forks Rd., Suite 200, Raleigh, N.C. 27609

DRAWN BY SPL DATE 10/06
CHECKED BY SL DATE 10/06
DWG. NO. B110

REVISIONS						SHEET NO.
NO.	BY	DATE	NO.	BY	DATE	S-131
1			3			TOTAL SHEETS
2			4			348

Jello AT NYD0072
02-OCT-2006 13:27
J:\cad\42873 - Alfred Cunningham\DGN\100X Submission\B2532_S0_B110_P13trunpland.dgn

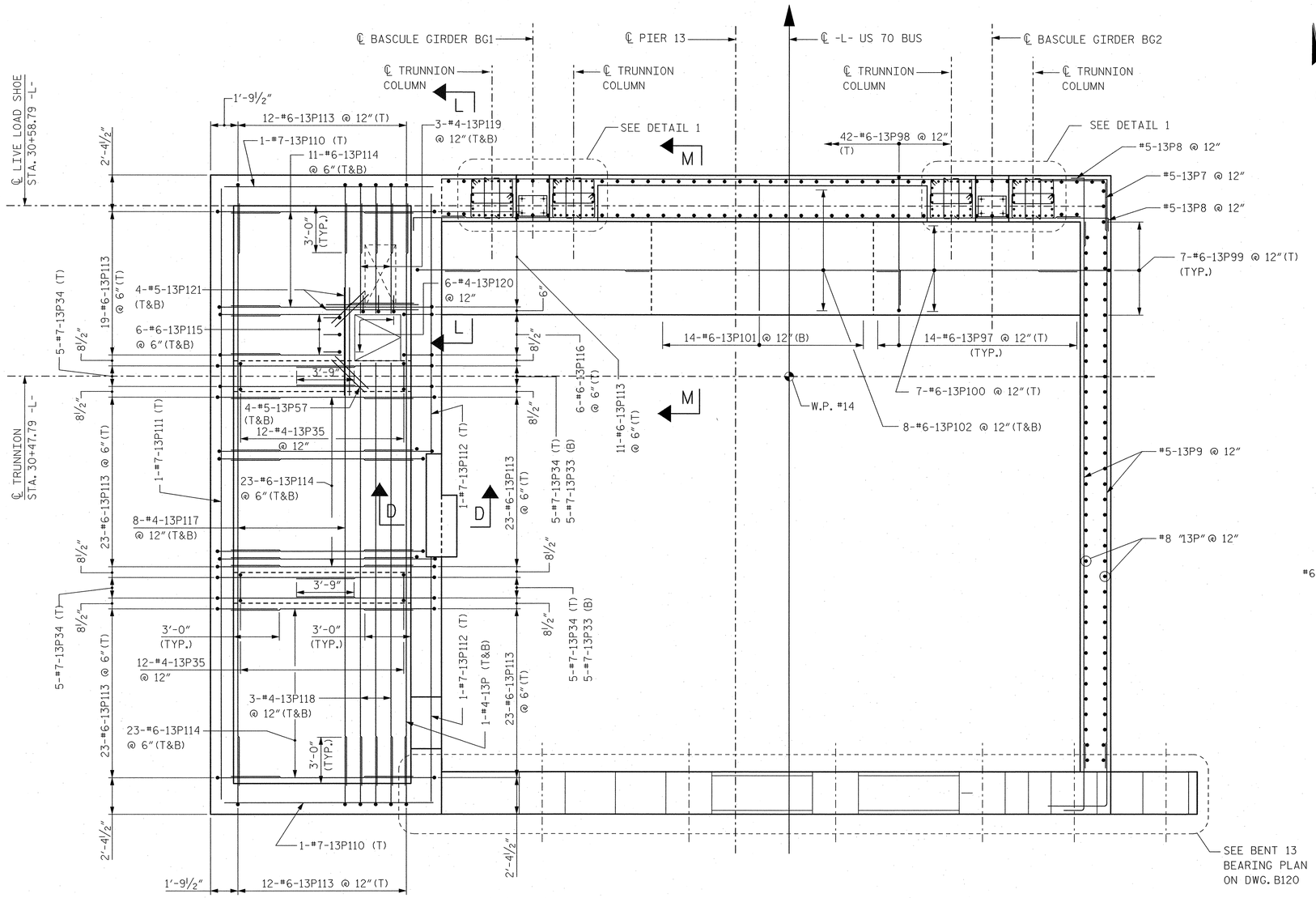

PIER 13 TRUNNION SUPPORT LEVEL REINFORCEMENT PLAN

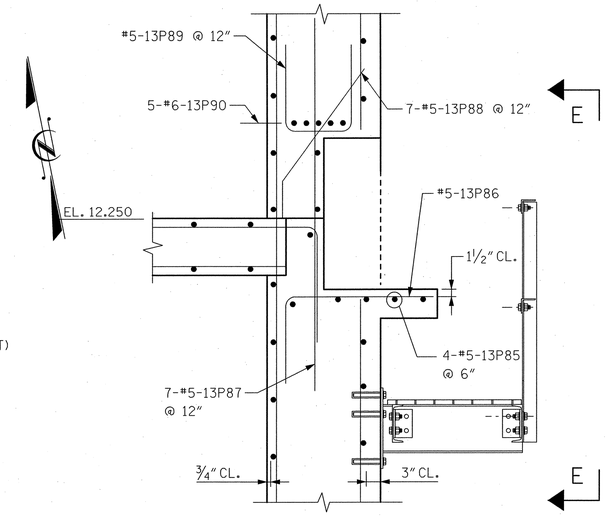

SECTION D-D

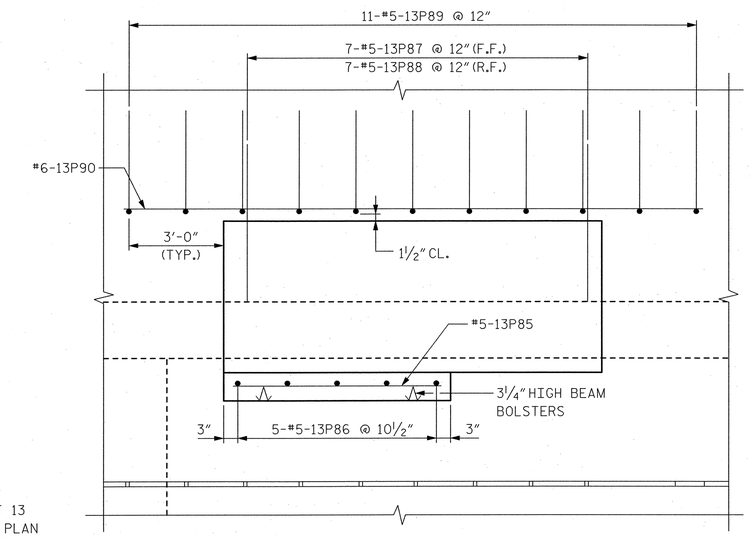

SECTION E-E

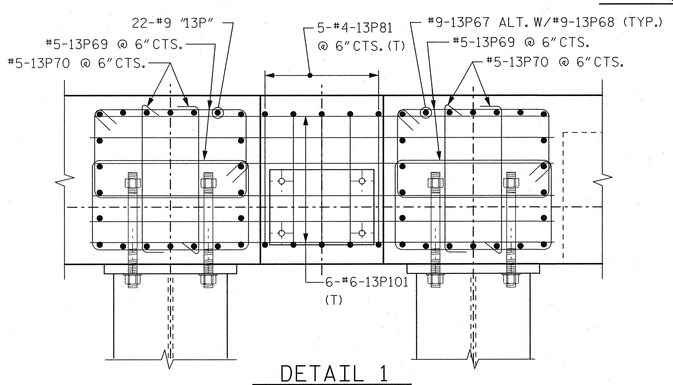

DETAIL 1

NOTES:

1. FOR GENERAL PLAN OF PIER 13 AT TRUNNION SUPPORT LEVEL, SEE DWG. B110.
2. FOR PIER 13 BAR LISTS AND BILL OF MATERIALS, SEE DWGS. B193 AND B194.
3. FOR SECTIONS L-L AND M-M, SEE DWG. B121.

PROJECT NO. B-2532

CRAVEN COUNTY

STATION: 31+21.29 -L-

NORTH CAROLINA PROFESSIONAL ENGINEER SEAL 12916 PAUL J. BARBER 10/31/06

STATE OF NORTH CAROLINA
DEPARTMENT OF TRANSPORTATION
RALEIGH, NC

SOUTH BASCULE PIER 13 TRUNNION SUPPORT LEVEL REINFORCEMENT PLAN

HNTB NORTH CAROLINA, P.C.
343 E. Six Forks Rd., Suite 200, Raleigh, N.C. 27609

DRAWN BY SPL DATE 10/06
CHECKED BY SL DATE 10/06

DWG. NO. B111

REVISIONS						SHEET NO.
NO.	BY	DATE	NO.	BY	DATE	S-132
1			3			TOTAL SHEETS
2			4			348

jlelia JT N10072
DGN CT_ATR_SS_01.dgn
J:\cadd\42873 - Alfred Cunningham\DGN\100% Submission\B2532_SD_B111_P13trunpierebar.dgn

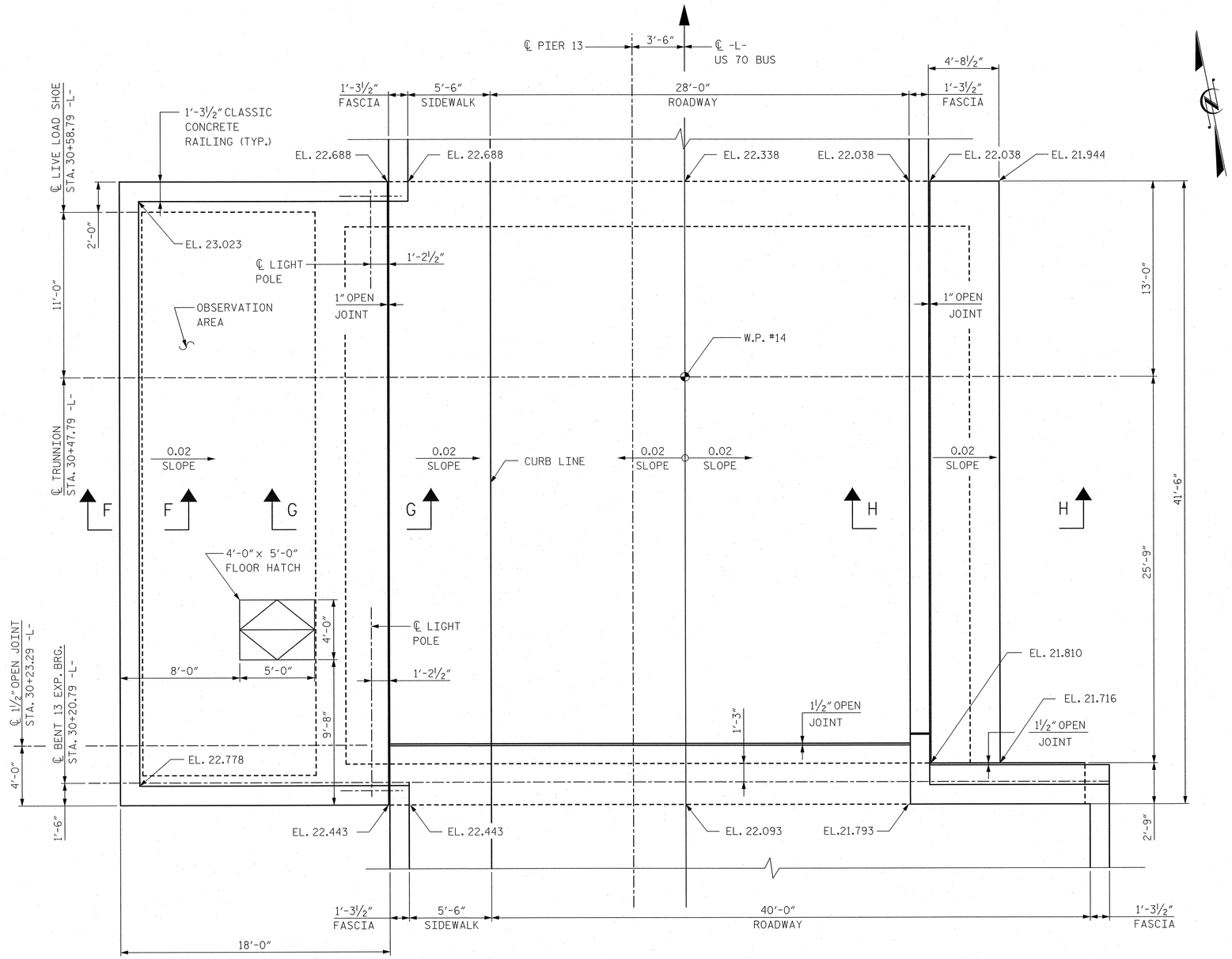

PIER 13 ROADWAY LEVEL PLAN

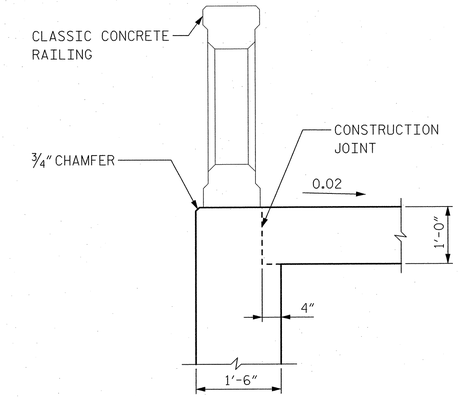

SECTION F-F

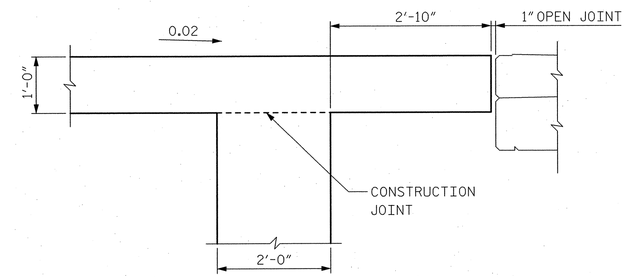

SECTION G-G

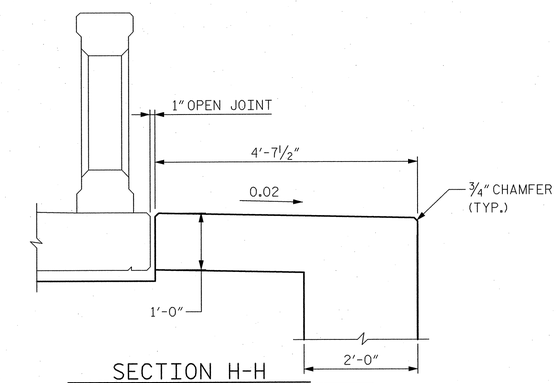

SECTION H-H

PROJECT NO. B-2532

CRAVEN **COUNTY**

STATION: 31+21.29 -L-

NOTES:

1. FOR SOUTH BASCULE SPAN DECK PLAN, SEE DWG. B182.
2. FOR PIER 13 CLASSIC CONCRETE RAILING DETAILS, SEE DWG. B188.
3. FOR PIER 13 ROADWAY LEVEL REINFORCEMENT DETAILS, SEE DWG. B113.
4. FOR LIGHT POLE ANCHORAGE DETAILS, SEE DWG. B190.

NORTH CAROLINA PROFESSIONAL ENGINEER SEAL 12916 PAUL J. BARBER 10/9/06

STATE OF NORTH CAROLINA
DEPARTMENT OF TRANSPORTATION
RALEIGH, NC

SOUTH BASCULE PIER 13
ROADWAY LEVEL PLAN

HNTB NORTH CAROLINA, P.C.
343 E. Six Forks Rd., Suite 200, Raleigh, N.C. 27609

DRAWN BY SPL DATE 10/06
CHECKED BY SL DATE 10/06
DWG. NO. **B112**

REVISIONS						SHEET NO.
NO.	BY	DATE	NO.	BY	DATE	S-133
1			3			TOTAL SHEETS
2			4			348

Tella AT N10072
02-Oct-2006 13:31
u:\scott42813_Alfred Cunningham\DGN\100X_Submission\B2532_SD_B112_P13roadway.dgn

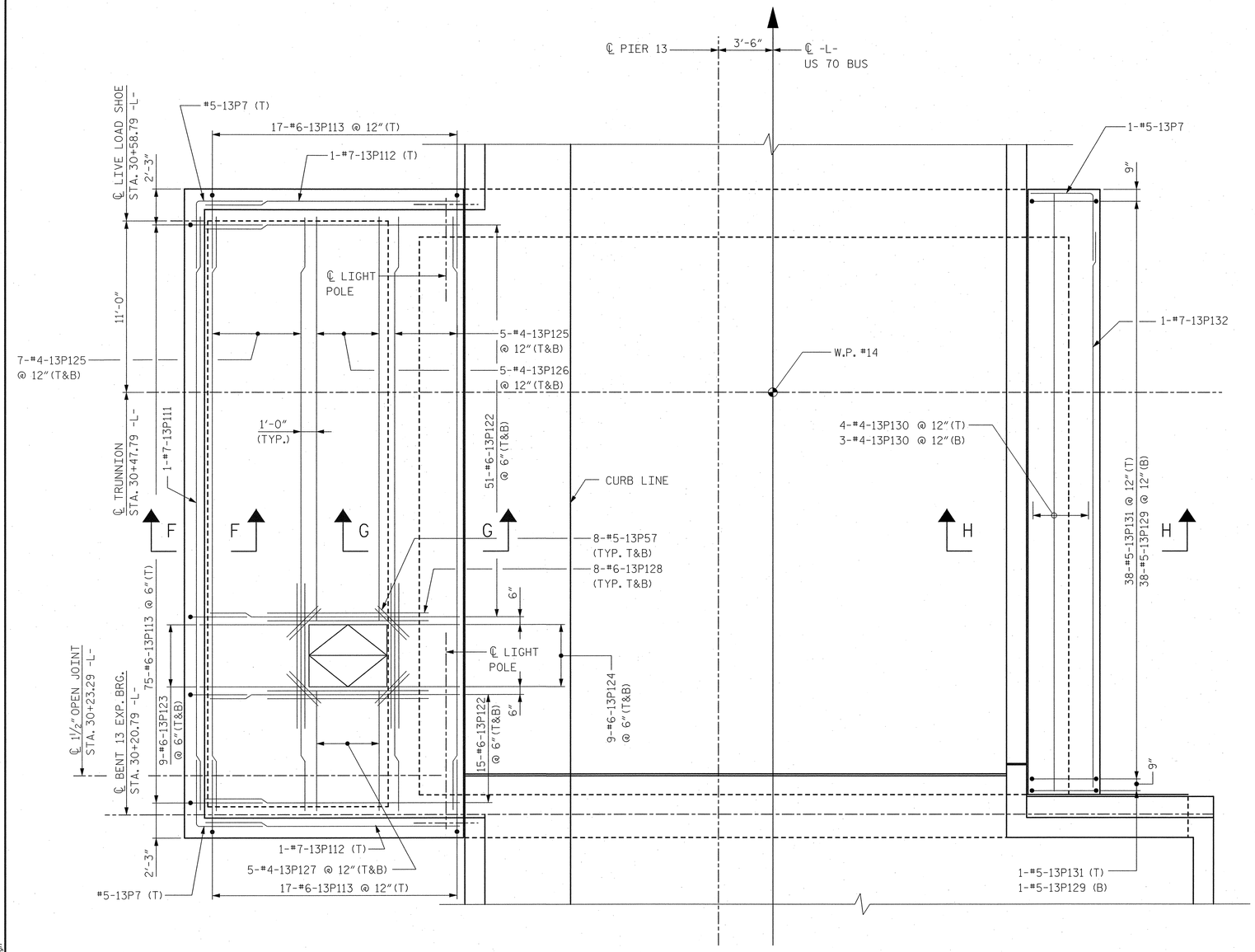

PIER 13 ROADWAY LEVEL REINFORCEMENT PLAN

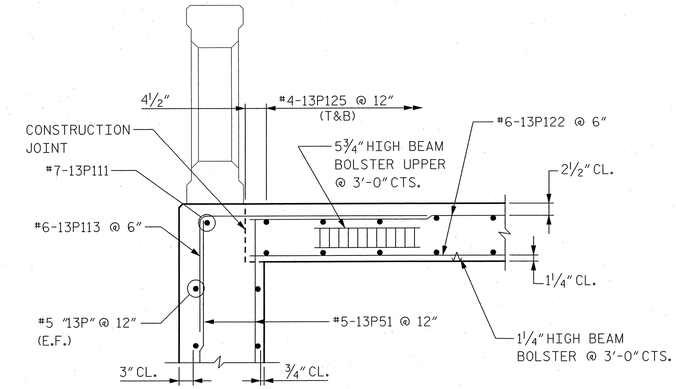

SECTION F-F

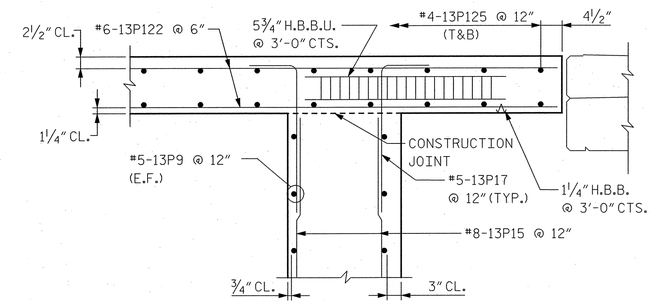

SECTION G-G

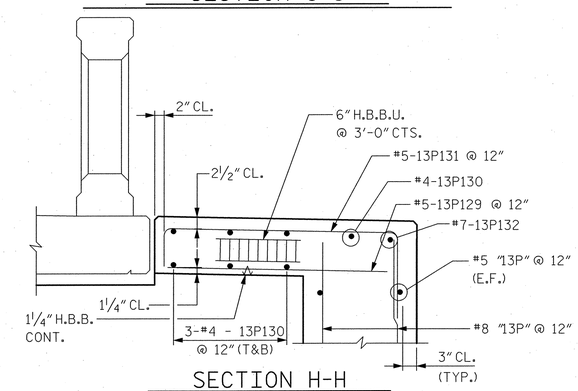

SECTION H-H

PROJECT NO. B-2532

CRAVEN **COUNTY**

STATION: 31+21.29 -L-

NOTES:

1. FOR PIER 13 BAR LISTS AND BILL OF MATERIALS, SEE DWGS. B193 AND B194.

NORTH CAROLINA PROFESSIONAL SEAL 12916 ENGINEER PAUL J. BARBER 10/20/06

STATE OF NORTH CAROLINA
DEPARTMENT OF TRANSPORTATION
RALEIGH, NC

SOUTH BASCULE PIER 13
ROADWAY LEVEL
REINFORCEMENT PLAN

HNTB NORTH CAROLINA, P.C.
343 E. Six Forks Rd., Suite 200, Raleigh, N.C. 27609

DRAWN BY SPL DATE 10/06
CHECKED BY SL DATE 10/06

DWG. NO. **B113**

REVISIONS						SHEET NO.
NO.	BY	DATE	NO.	BY	DATE	S-134
1			3			TOTAL SHEETS
2			4			348

Hello - AT W100072
10/20/2006 1:12:24
u:\cad\42873 - Alfred Cunningham\OSW\100% Submission\B2532_SD_B113_P13rdwylevelrebar.dgn

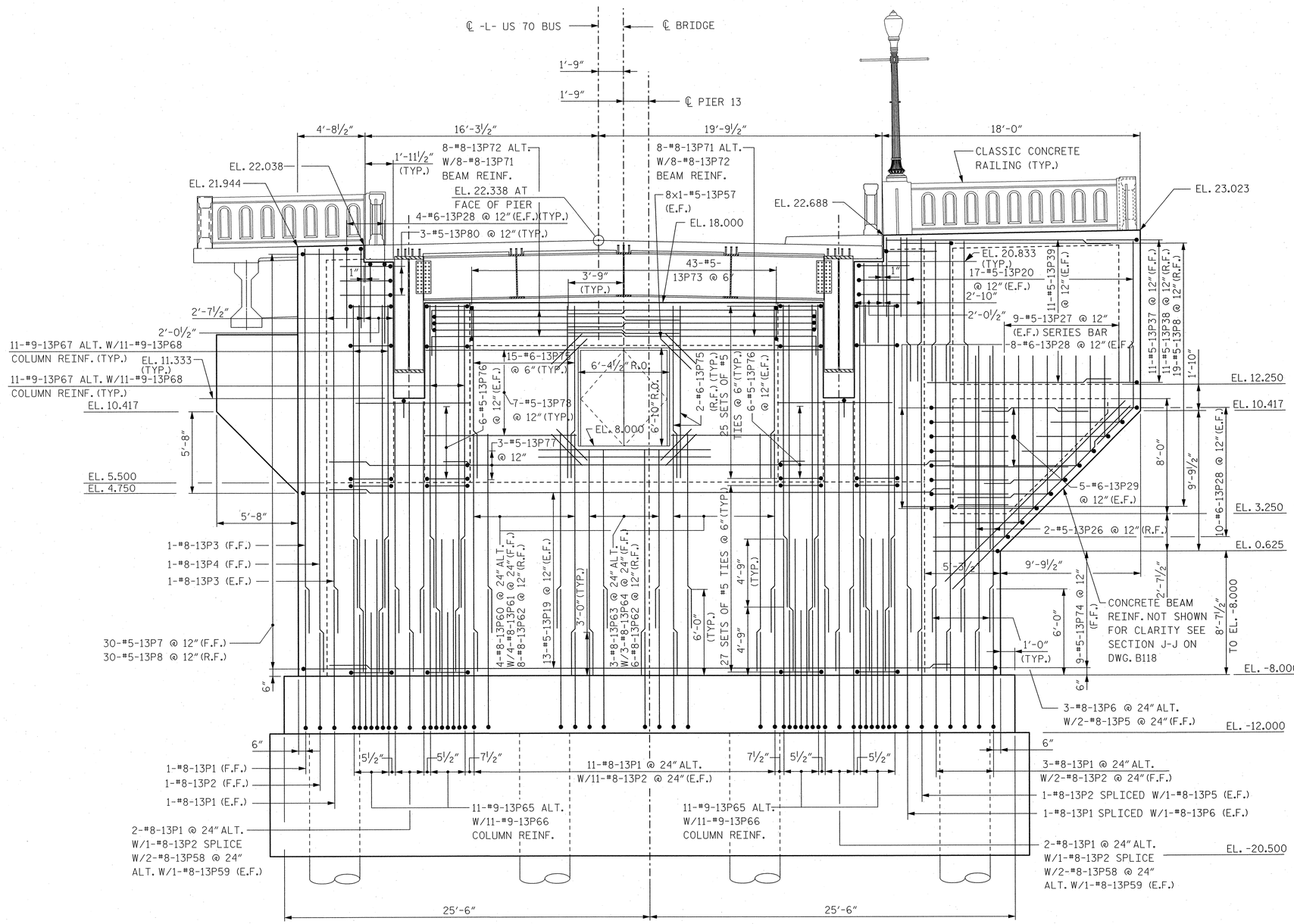

BASCULE PIER 13 - NORTH ELEVATION

(LOOKING SOUTH)

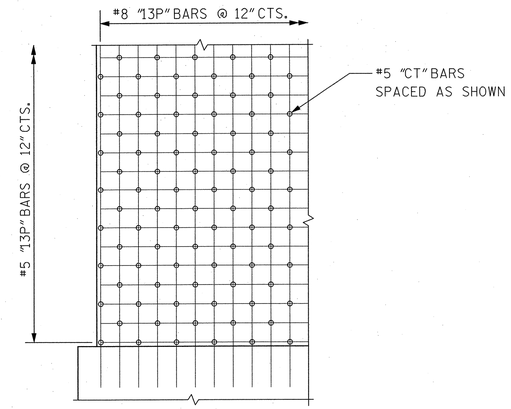

CROSS TIE SCHEMATIC DIAGRAM

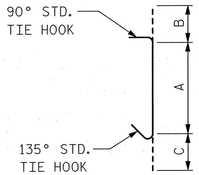

NOTE-FOR PLAN LOCATION OF "CT" BARS, SEE DWGS. B109 AND B123 FOR PIER 13 AND 14 RESPECTIVELY.

CROSS TIE "CT" BARS

NOTES:

1. FOR PIER 13 BAR LISTS AND BILL OF MATERIALS, SEE DWGS. B193 AND B194.
2. ALL ELEVATIONS SHOWN ARE AT FACE OF PIER.
3. FOR PIER 13 CLASSIC CONCRETE RAILING DETAILS, SEE DWG. B188.

PROJECT NO. B-2532

CRAVEN COUNTY

STATION: 31+21.29 -L-

STATE OF NORTH CAROLINA
DEPARTMENT OF TRANSPORTATION
RALEIGH, NC

BASCULE PIER 13
NORTH WALL ELEVATION

NORTH CAROLINA PROFESSIONAL SEAL 12916 ENGINEER PAUL J. BARBER 10/3/06

HNTB NORTH CAROLINA, P.C.
343 E. Six Forks Rd., Suite 200, Raleigh, N.C. 27609

DRAWN BY PE DATE 10/06
CHECKED BY GT DATE 10/06
DWG. NO. B114

REVISIONS						SHEET NO.
NO.	BY	DATE	NO.	BY	DATE	S-135
1			3			TOTAL SHEETS
2			4			348

jello - AT W10072
02-07-2006 2:14
u0004/42573 - Alfred Cunningham/DGN 1002: Submission\B2532_SD_B114_P13relevdgn

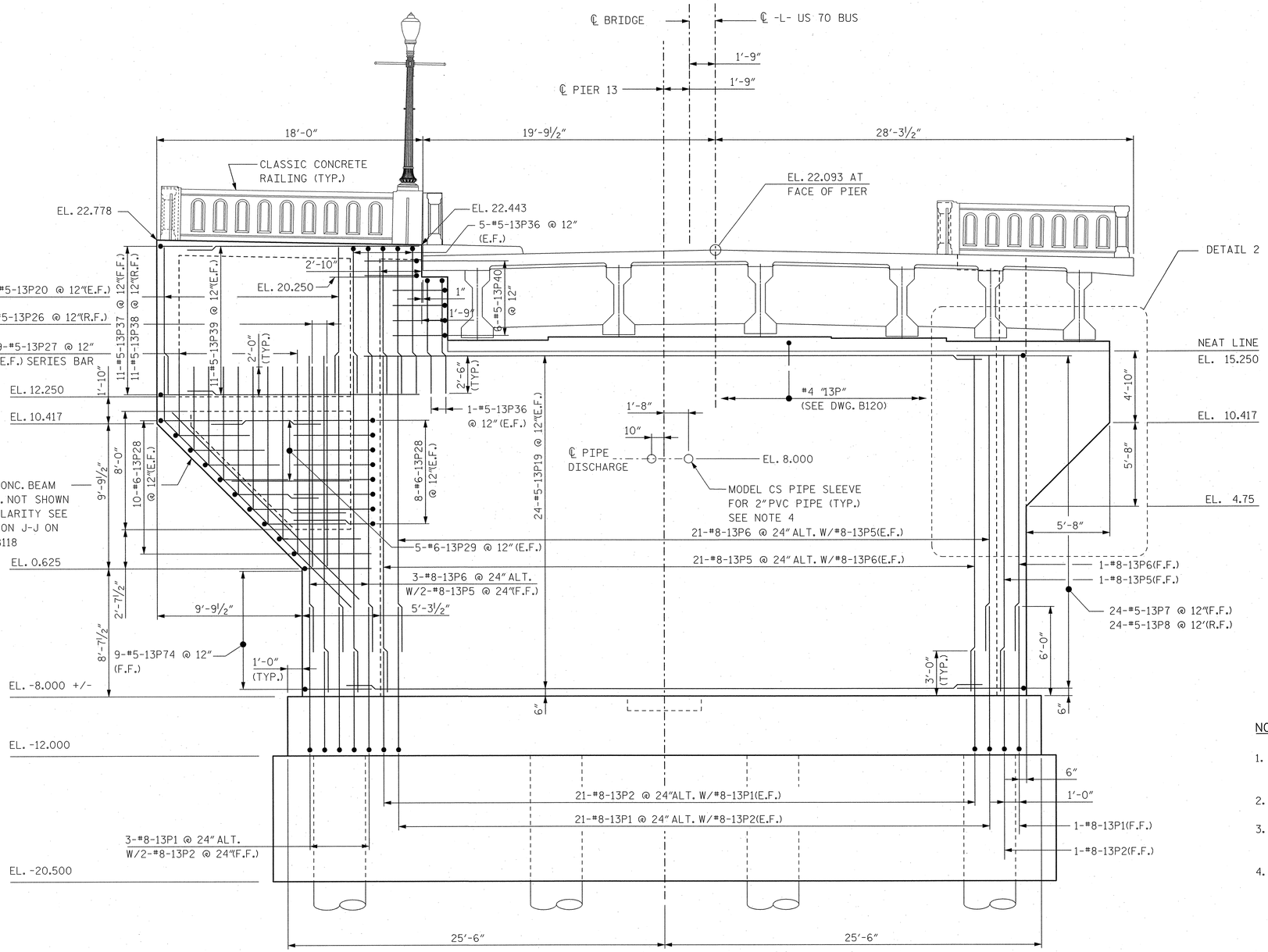

BASCULE PIER 13 - SOUTH ELEVATION

(LOOKING NORTH)

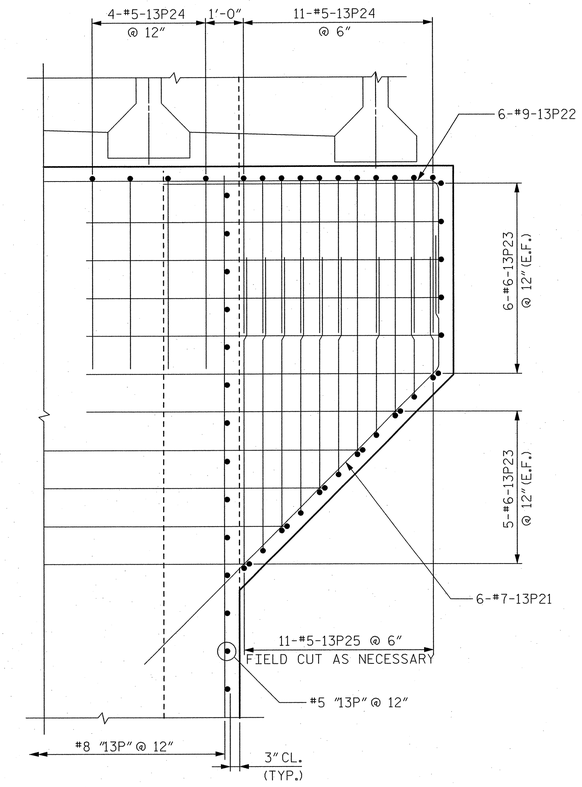

DETAIL 2

NOTES:

1. FOR PIER 13 BAR LISTS AND BILL OF MATERIALS, SEE DWGS. B193 AND B194.
2. ALL ELEVATIONS SHOWN ARE AT FACE OF PIER.
3. FOR PIER 13 CLASSIC CONCRETE RAILING DETAILS, SEE DWG. B188.
4. FOR PIPE SLEEVE DETAIL, SEE DWG. M18.

PROJECT NO. B-2532

CRAVEN **COUNTY**

STATION: 31+21.29 -L-

NORTH CAROLINA PROFESSIONAL ENGINEER SEAL 12916 PAUL J. BARBER 10/13/06

STATE OF NORTH CAROLINA
DEPARTMENT OF TRANSPORTATION
RALEIGH, NC

BASCULE PIER 13
SOUTH WALL ELEVATION

HNTB NORTH CAROLINA, P.C.
343 E. Six Forks Rd., Suite 200, Raleigh, N.C. 27609

DRAWN BY PE DATE 10/06
CHECKED BY GT DATE 10/06
DWG. NO. **B115**

REVISIONS						SHEET NO.
NO.	BY	DATE	NO.	BY	DATE	S-136
1			3			TOTAL SHEETS
2			4			348

jaila AT W10012
02/27/2006 14:44
J:\cadd\r4203 - Alfred Cunningham\DGN 1002\ Submission\B2532_SD_B115_P13elev.dgn

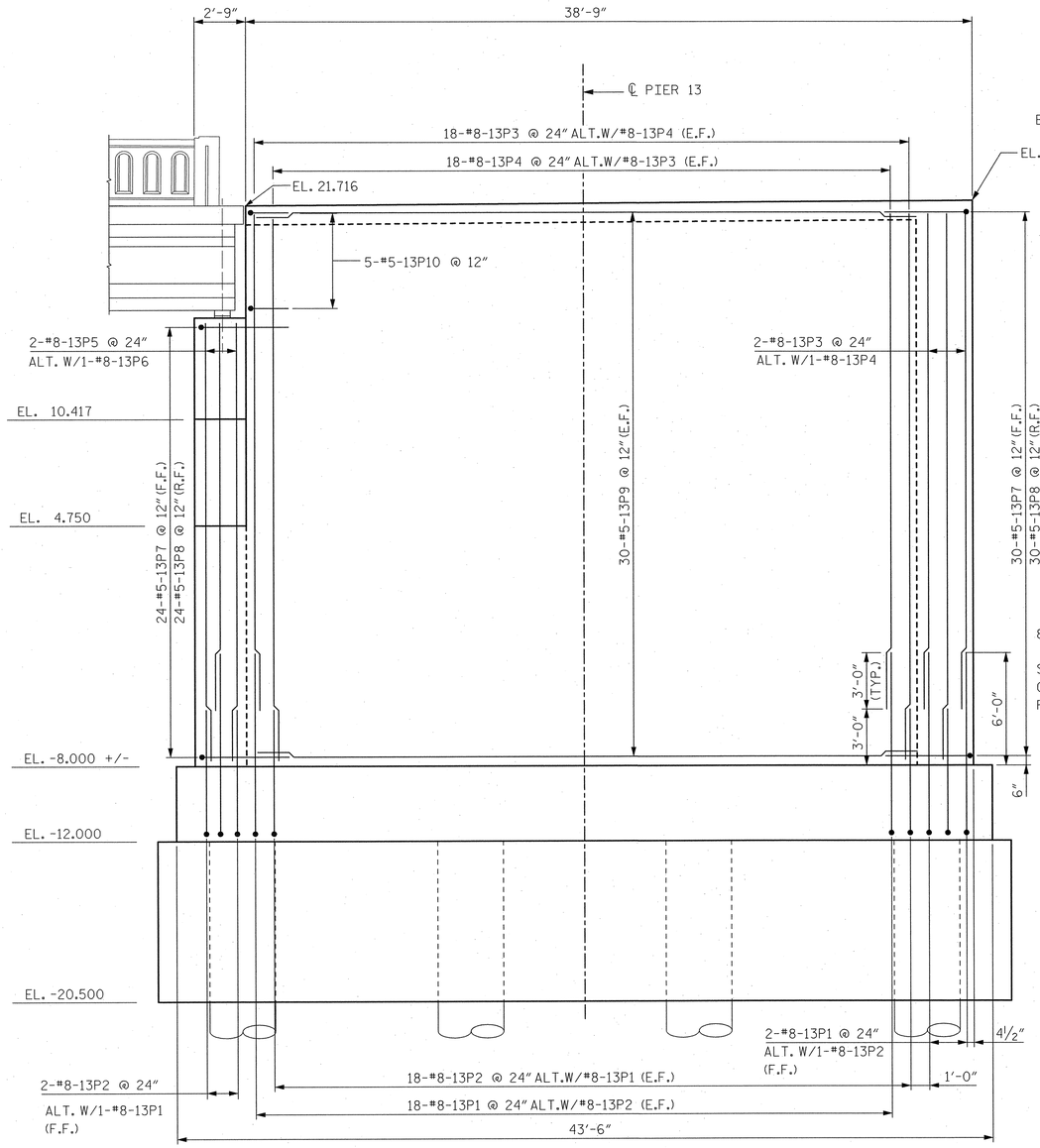

BASCULE PIER 13 - EAST ELEVATION

(LOOKING WEST)

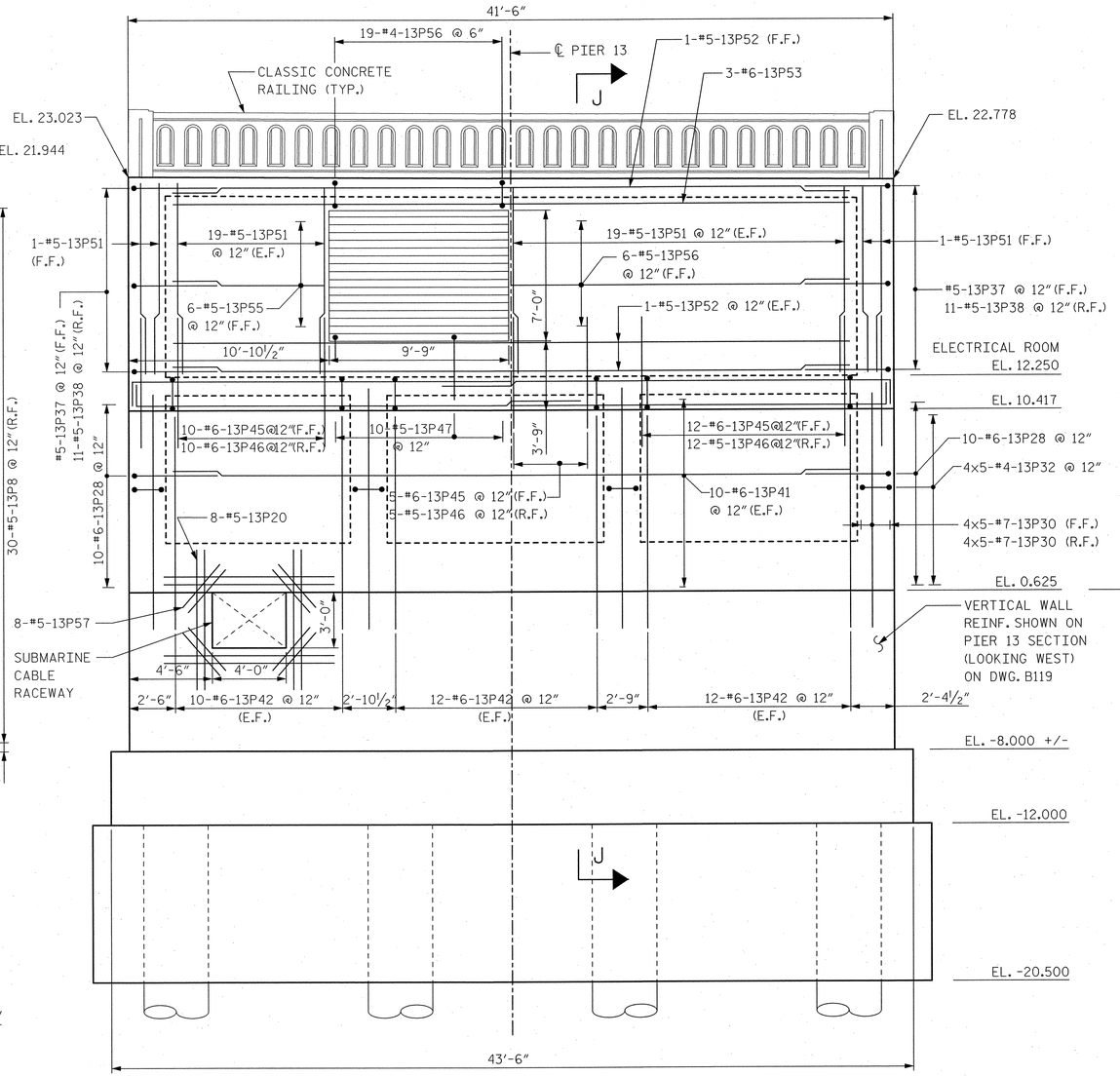

BASCULE PIER 13 - WEST ELEVATION

(LOOKING EAST)

PROJECT NO. B-2532

CRAVEN **COUNTY**

STATION: 31+21.29 -L-

NOTES:

1. FOR PIER 13 BAR LISTS AND BILL OF MATERIALS, SEE DWGS. B193 AND B194.
2. ALL ELEVATIONS SHOWN ARE AT FACE OF PIER.
3. FOR PIER 13 CLASSIC CONCRETE RAILING DETAILS, SEE DWG. B188.
4. FOR SECTION J-J, SEE DWG. B118.

NORTH CAROLINA PROFESSIONAL ENGINEER SEAL 12916 PAUL J. BARBER 10/18/06

STATE OF NORTH CAROLINA
DEPARTMENT OF TRANSPORTATION
RALEIGH, NC

BASCULE PIER 13
WEST AND EAST
WALL ELEVATIONS

HNTB NORTH CAROLINA, P.C.
343 E. Six Forks Rd., Suite 200, Raleigh, N.C. 27609

DRAWN BY PE DATE 10/06
CHECKED BY GT DATE 10/06
DWG. NO. **B116**

REVISIONS						SHEET NO.
NO.	BY	DATE	NO.	BY	DATE	S-137
1			3			TOTAL SHEETS
2			4			348

Iteig AT W10072
02-OCT-2006 13:46
U:\pwwork\42013_Alfred Cunningham\D0N1001_Submission\B2532_SD_B116_P13weele.dgn

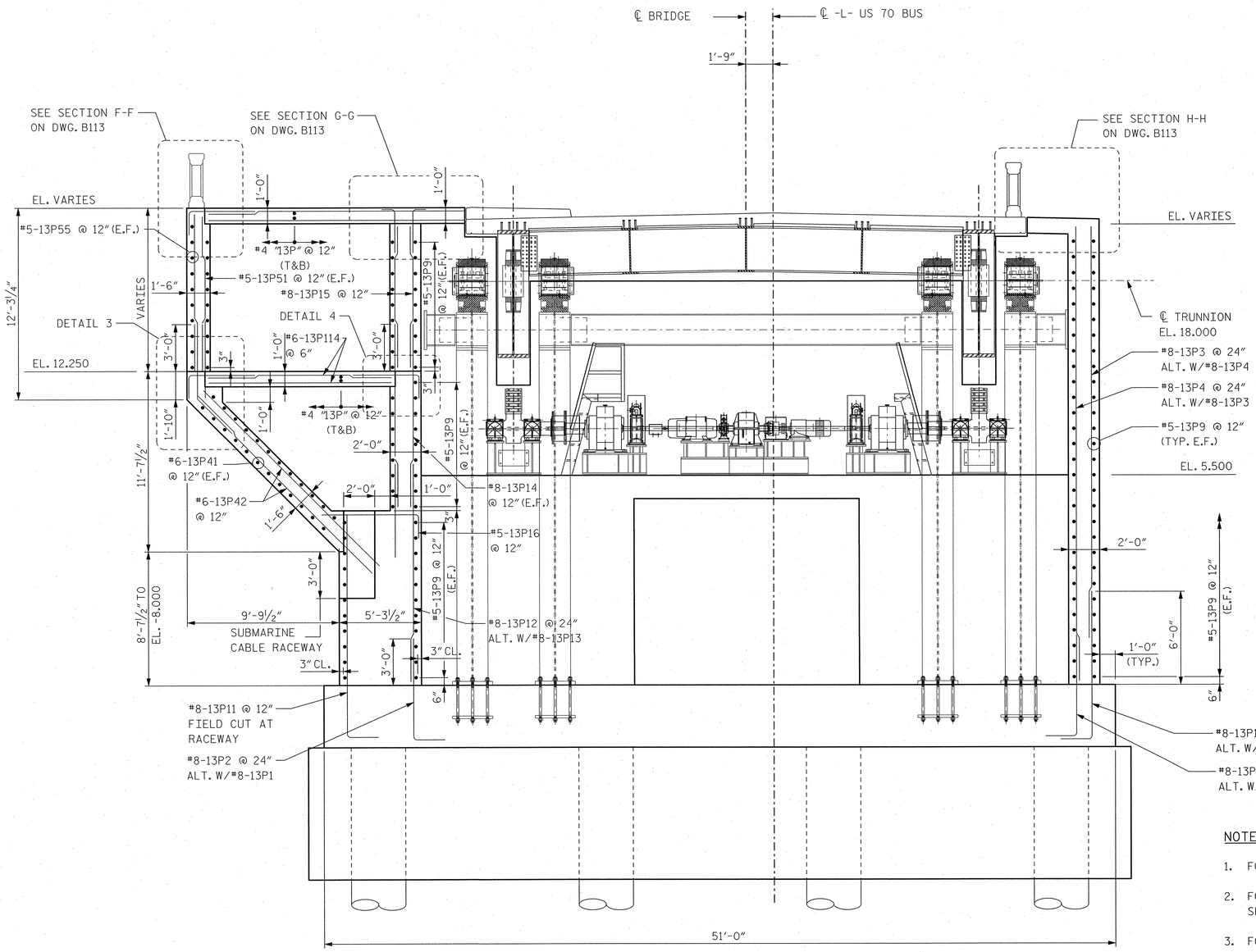

PIER 13 SECTION - (LOOKING NORTH)

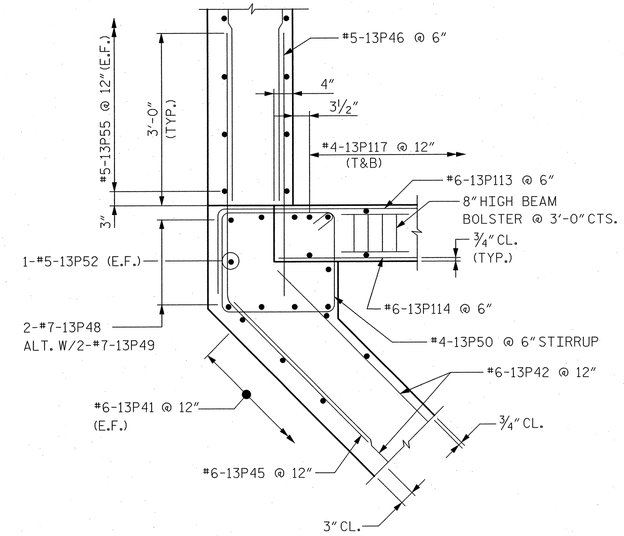

DETAIL 3

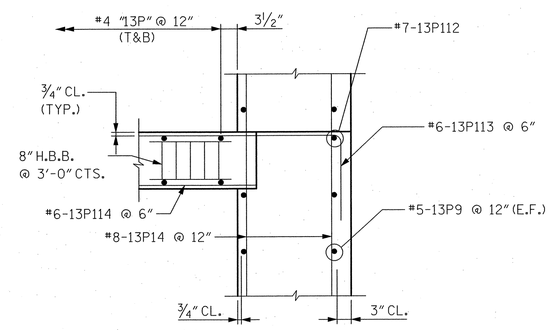

DETAIL 4

NOTES:

1. FOR GENERAL NOTES, SEE DWG. B104.
2. FOR MAINTENANCE PLATFORMS AND LADDERS (NOT SHOWN FOR CLARITY), SEE DWGS. B136 AND B139.
3. FOR PIER 13 BAR LIST AND BILL OF MATERIALS, SEE DWGS. B193 AND B194.
4. FOR TAIL SPAN LOCK DETAILS, SEE DWG. B179.

PROJECT NO. B-2532

CRAVEN COUNTY

STATION: 31+21.29 -L-

NORTH CAROLINA PROFESSIONAL ENGINEER SEAL 12916 PAUL J. BARBER 10/20/06

STATE OF NORTH CAROLINA
DEPARTMENT OF TRANSPORTATION
RALEIGH, NC

SOUTH BASCULE PIER 13
LONGITUDINAL SECTION
(LOOKING NORTH)

HNTB NORTH CAROLINA, P.C.
343 E. Six Forks Rd., Suite 200, Raleigh, N.C. 27609

DRAWN BY SPL DATE 10/06
CHECKED BY SL DATE 10/06

DWG. NO. B117

REVISIONS						SHEET NO.
NO.	BY	DATE	NO.	BY	DATE	S-138
1			3			TOTAL SHEETS
2			4			348

jelle AT NYDOT2
02OCT-2006 13:47
usacn\ABES_Alfred Cunningham\DGN\100% Submission\B2532_SD_B117_P13seed.dgn

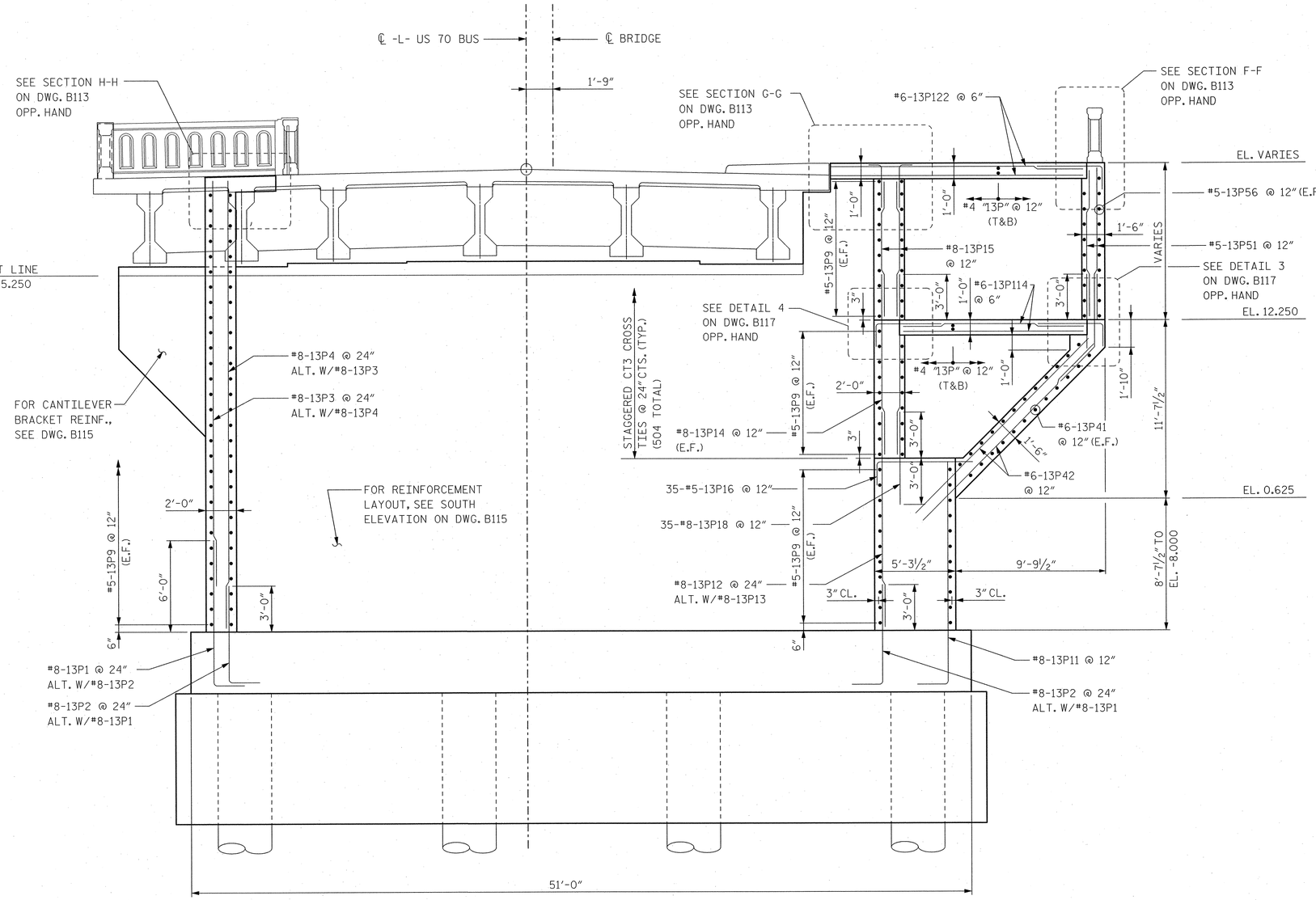

PIER 13 SECTION - (LOOKING SOUTH)

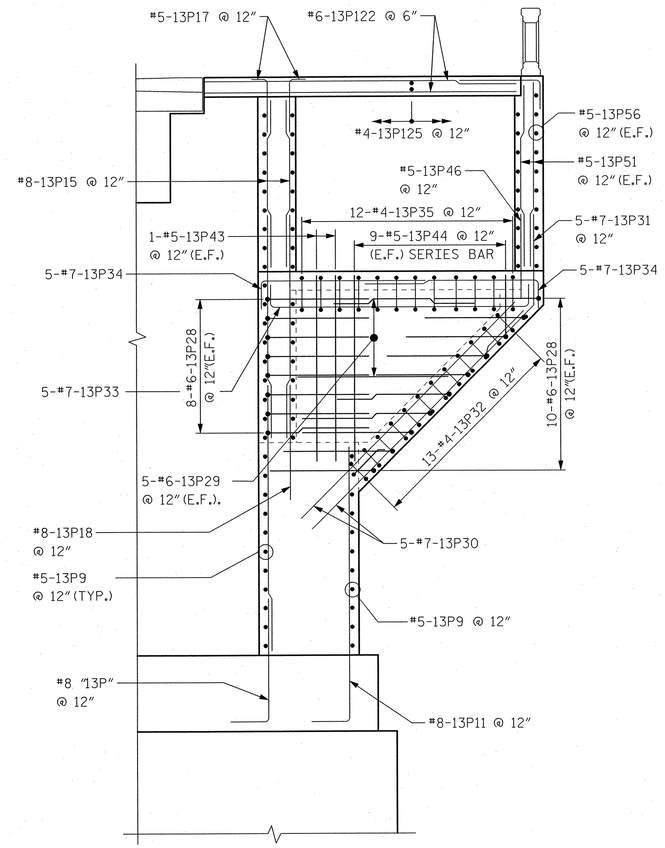

SECTION J-J

SIMILAR AT 2 LOCATIONS

PROJECT NO. B-2532

CRAVEN **COUNTY**

STATION: 31+21.29 -L-

NOTES:

1. FOR GENERAL NOTES, SEE DWG. B104.
2. FOR MAINTENANCE PLATFORMS AND LADDERS (NOT SHOWN FOR CLARITY), SEE DWGS. B136 AND B139.
3. FOR PIER 13 BAR LIST AND BILL OF MATERIALS, SEE DWGS. B193 AND B194.
4. FOR TAIL SPAN LOCK DETAILS, SEE DWG. B179.
5. FOR LOCATION OF SECTION J-J, SEE DWG. B116.
6. FOR SCHEMATIC DIAGRAM OF CROSS TIE LOCATIONS, SEE DWG. B114.

NORTH CAROLINA PROFESSIONAL SEAL 12916 ENGINEER PAUL J. BARBER 10/13/06

HNTB NORTH CAROLINA, P.C.
343 E. Six Forks Rd., Suite 200, Raleigh, N.C. 27609

DRAWN BY SPL DATE 10/06
CHECKED BY SL DATE 10/06

DWG. NO. **B118**

STATE OF NORTH CAROLINA
DEPARTMENT OF TRANSPORTATION
RALEIGH, NC

SOUTH BASCULE PIER 13
LONGITUDINAL SECTION
(LOOKING SOUTH)

REVISIONS						SHEET NO.
NO.	BY	DATE	NO.	BY	DATE	S-139
1			3			TOTAL SHEETS
2			4			348

Jallo AT WYDOT72
02-OCT-2006 13:48
dgn:dn:\B2532_S1_B118_P13sheet.dgn
dscr:dn:\B2532_Submission\DGN\100X Alfred Cunningham

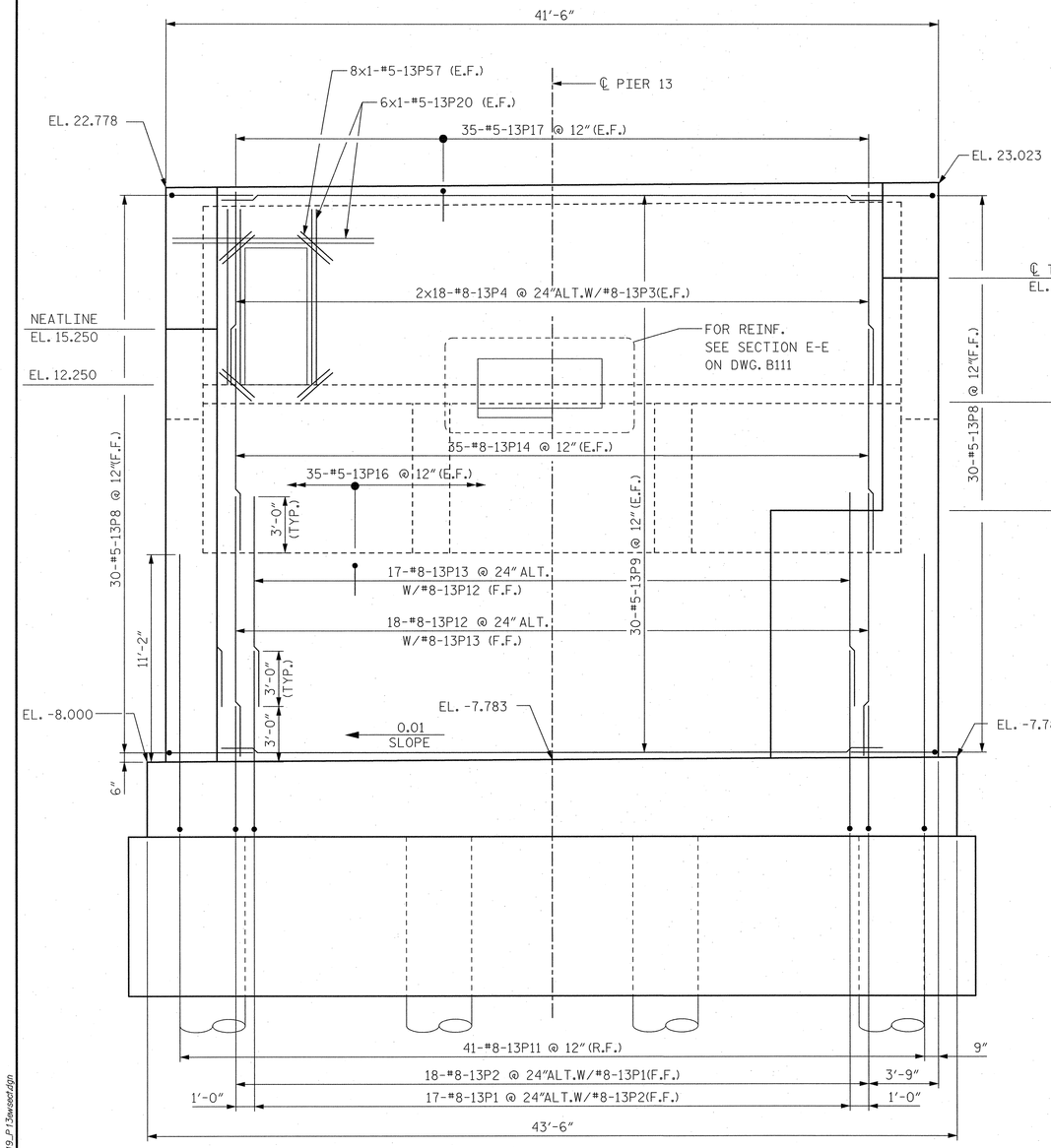

PIER 13 SECTION - (LOOKING WEST)

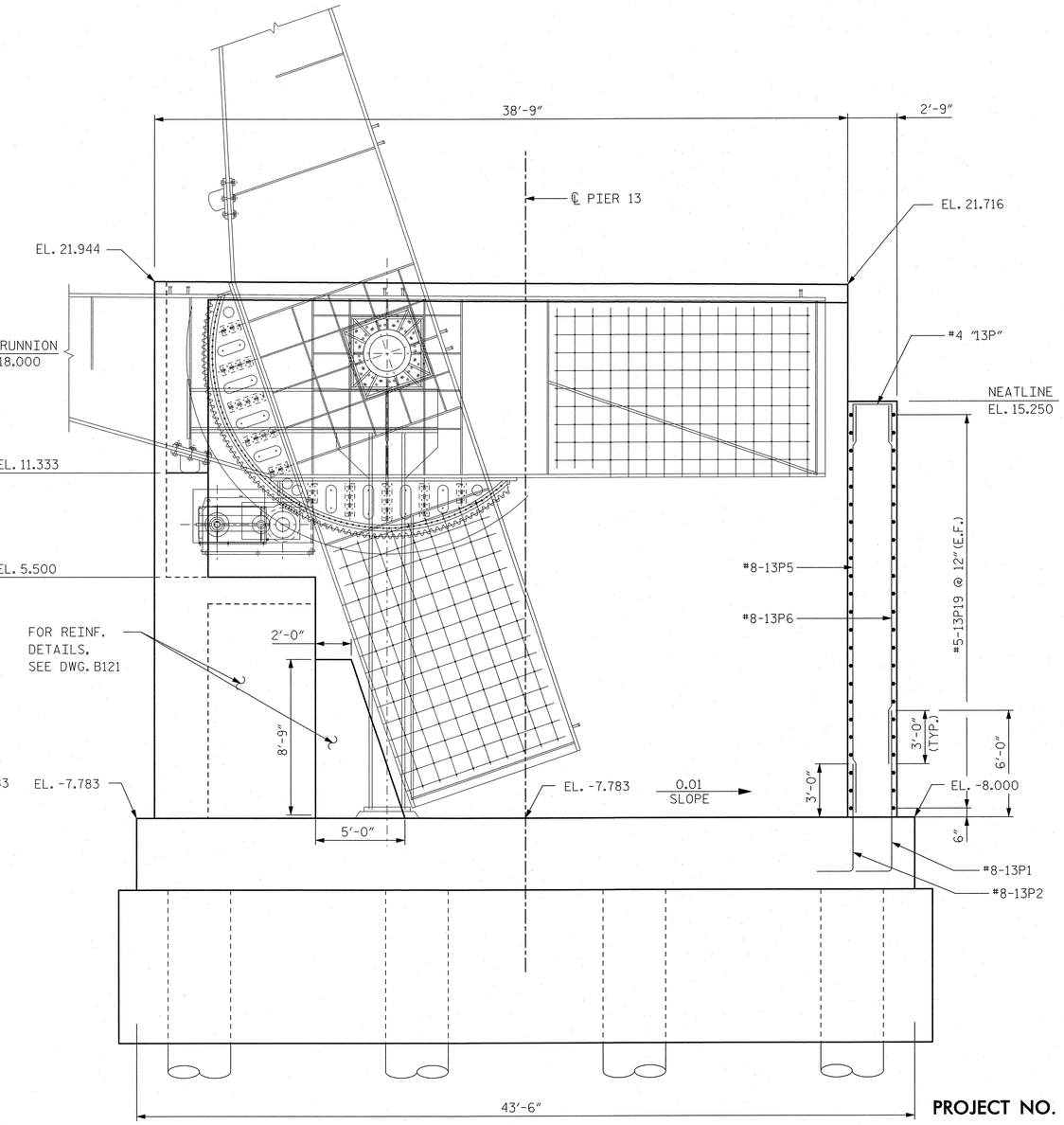

PIER 13 SECTION - (LOOKING EAST)

PROJECT NO. B-2532

CRAVEN **COUNTY**

STATION: 31+21.29 -L-

NOTES:

1. FOR PIER 13 BAR LISTS AND BILL OF MATERIALS, SEE DWGS. B193 AND B194.
2. ALL ELEVATIONS SHOWN ARE AT FACE OF PIER.

NORTH CAROLINA PROFESSIONAL SEAL 12916 ENGINEER PAUL J. BARBER 10/24/06

STATE OF NORTH CAROLINA
DEPARTMENT OF TRANSPORTATION
RALEIGH, NC

SOUTH BASCULE PIER 13
TRANSVERSE SECTIONS
(LOOKING WEST AND EAST)

HNTB NORTH CAROLINA, P.C.
343 E. Six Forks Rd., Suite 200, Raleigh, N.C. 27609

DRAWN BY PE DATE 10/06
CHECKED BY SL DATE 10/06

DWG. NO. **B119**

REVISIONS						SHEET NO.
NO.	BY	DATE	NO.	BY	DATE	S-140
1			3			TOTAL SHEETS
2			4			348

Jobs AT_NW0072
10/24/2006 12:24
J:\cadd\43873 - Alfred Cunningham\DGN\100% Submission\B2532_SD_B119_P13wsect.dgn

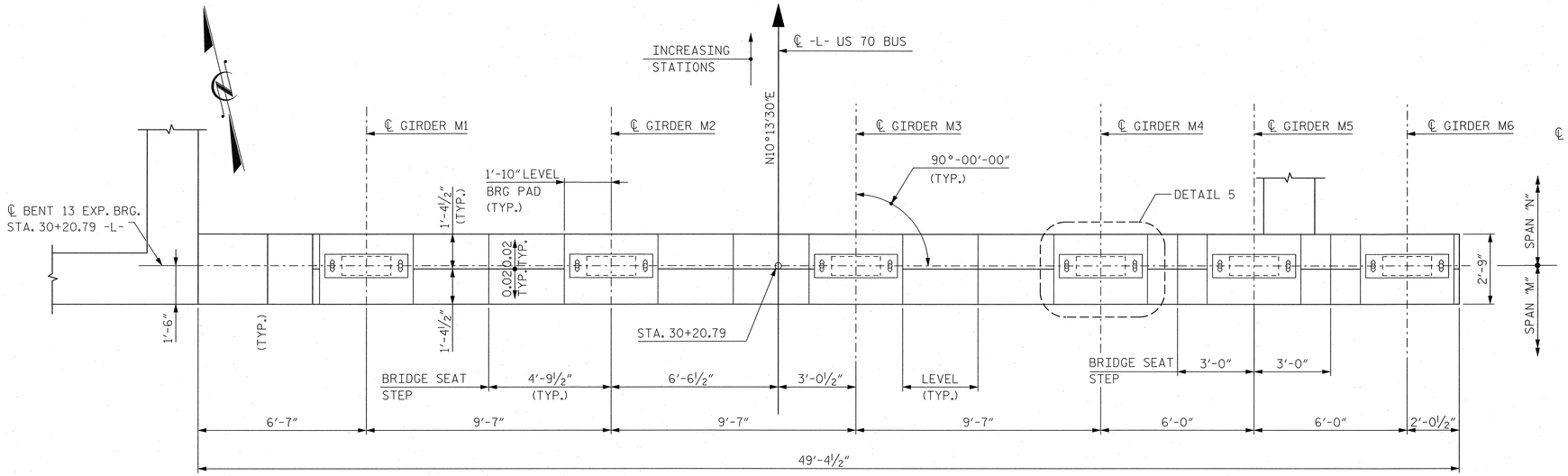

PARTIAL PLAN

AT BENT 13 BEARING SEAT

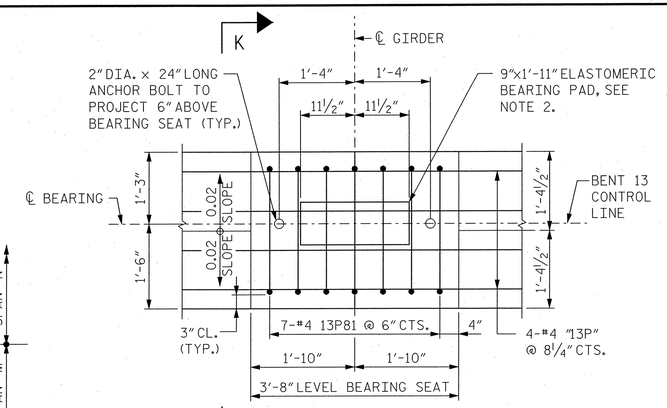

DETAIL 5

TYP. AT EACH GIRDER

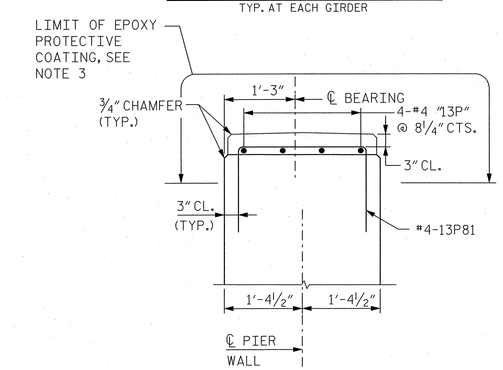

SECTION K-K

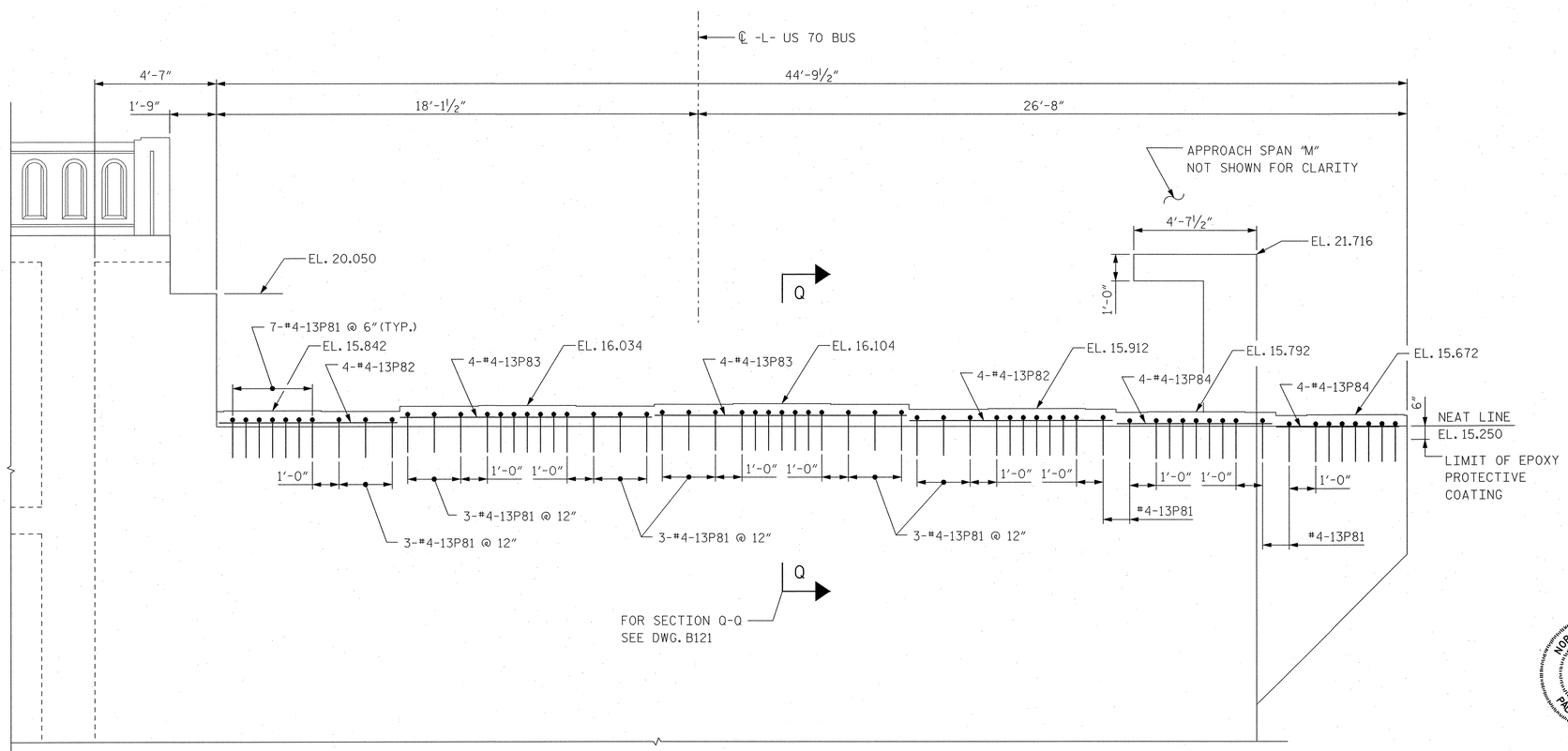

PARTIAL ELEVATION

LOOKING NORTH

NOTES:

1. FOR PIER 13 BAR LIST AND BILL OF MATERIALS, SEE DWGS. B193 AND B194.
2. FOR PRESTRESSED CONCRETE GIRDER AND ELASTOMERIC BEARING DETAILS, SEE APPROACH SPAN DRAWINGS.
3. FOR EPOXY PROTECTIVE COATING, SEE SPECIAL PROVISIONS.
4. THE "NEAT LINE" IS A CONSTRUCTION JOINT TO PERMIT PROPER POURING OF BRIDGE SEATS.
5. THE TOP SURFACE AREA OF THE BEARING WALL SHALL BE CURED IN ACCORDANCE WITH THE STANDARD SPECIFICATIONS EXCEPT THE MEMBRANCE CURING COMPOUND METHOD SHALL NOT BE USED.

PROJECT NO. B-2532

CRAVEN **COUNTY**

STATION: 31+21.29 -L-

NORTH CAROLINA PROFESSIONAL SEAL 12916 ENGINEER PAUL J. BARBER 10/20/06

STATE OF NORTH CAROLINA
DEPARTMENT OF TRANSPORTATION
RALEIGH, NC

SOUTH BASCULE PIER 13
BENT 13 BEARING
PLAN AND DETAILS

HNTB NORTH CAROLINA, P.C.
343 E. Six Forks Rd., Suite 200, Raleigh, N.C. 27609

DRAWN BY PE DATE 10/06
CHECKED BY SL DATE 10/06

DWG. NO. **B120**

REVISIONS						SHEET NO.
NO.	BY	DATE	NO.	BY	DATE	S-141
1			3			TOTAL SHEETS
2			4			348

jobs AT WYDOT2
jobs 2006 R-2532
J:\odot\42573 - Alfred Cunningham\OGIN\1032_Submission\B2532_SD_B120_P13Approach.dgn

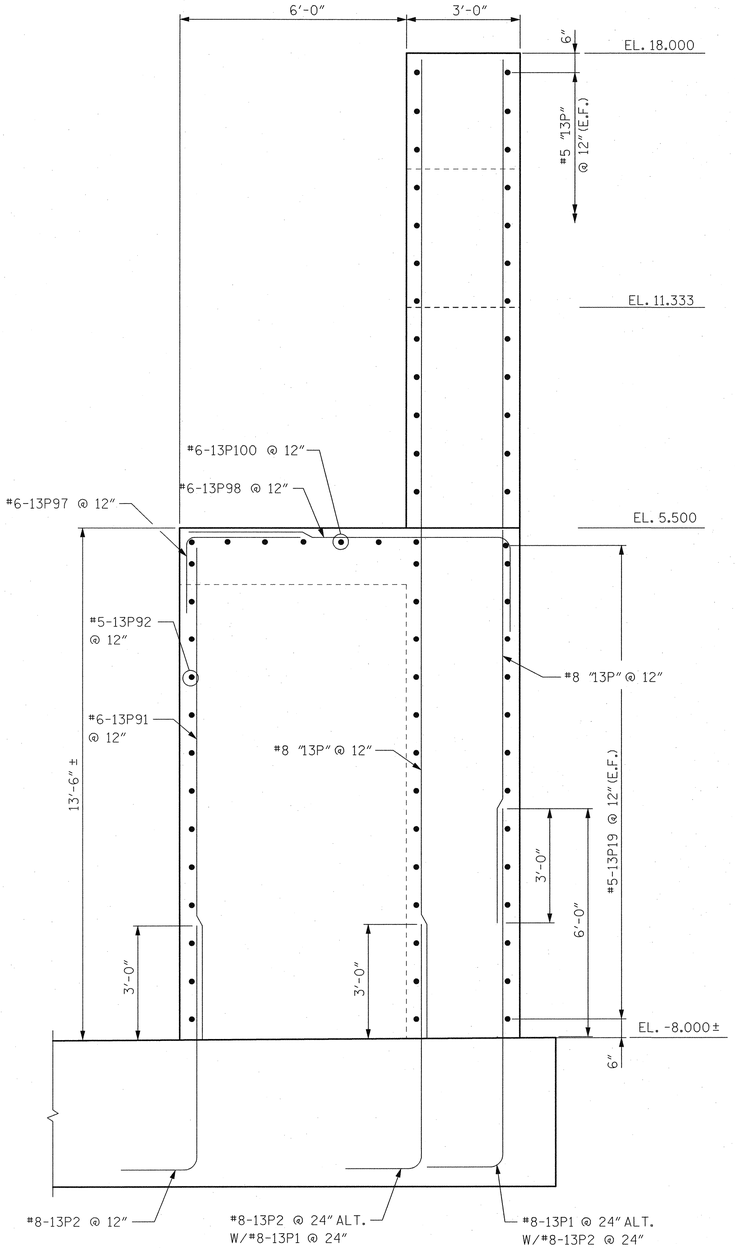

SECTION L-L

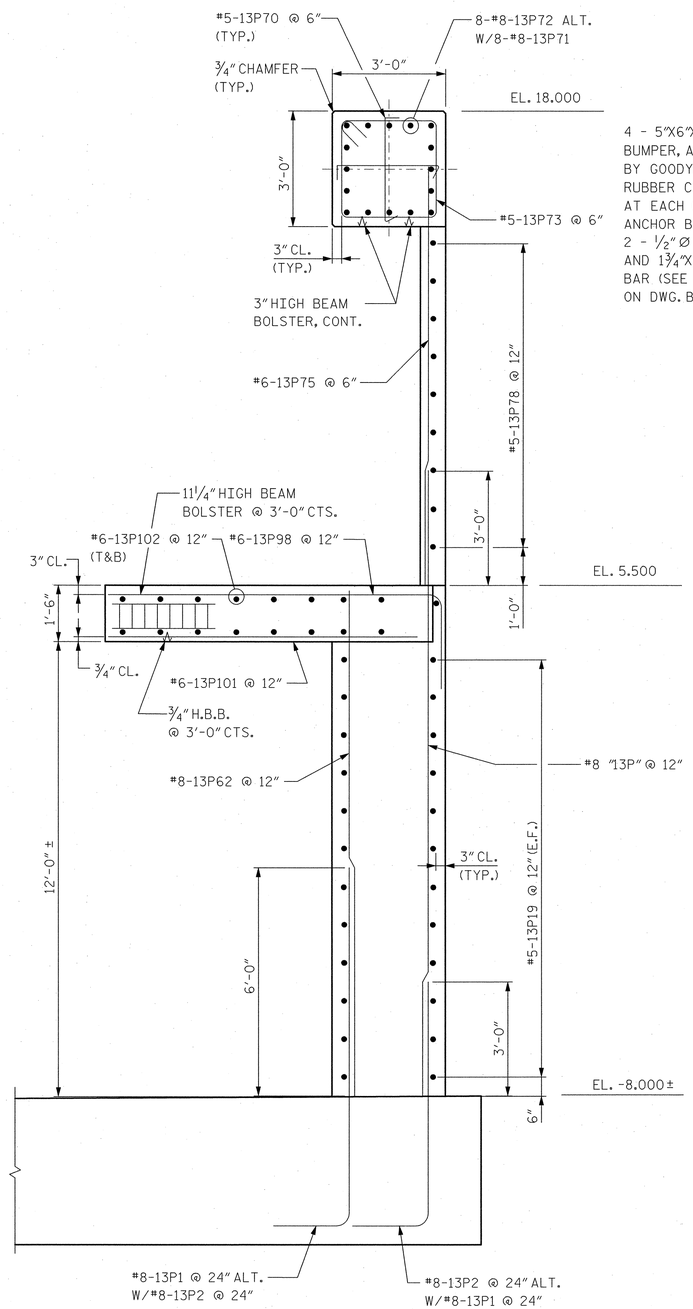

SECTION M-M

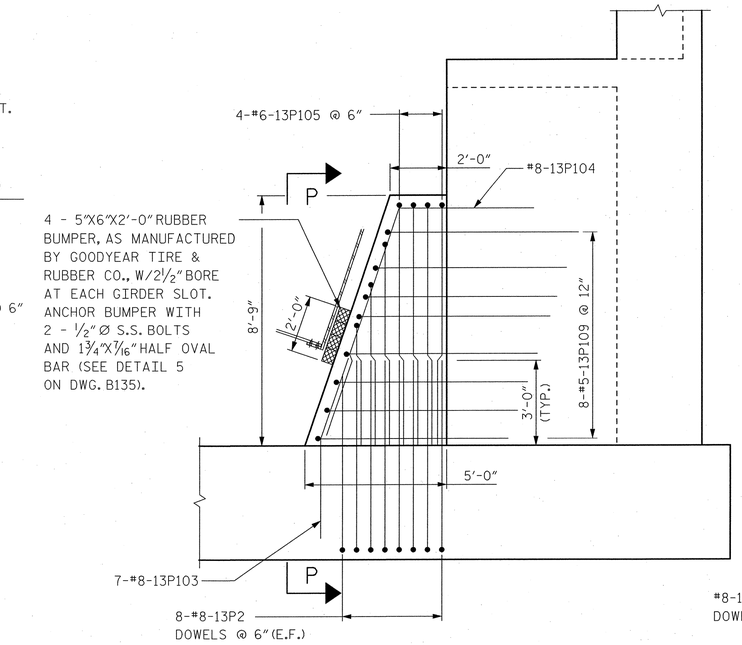

SECTION N-N

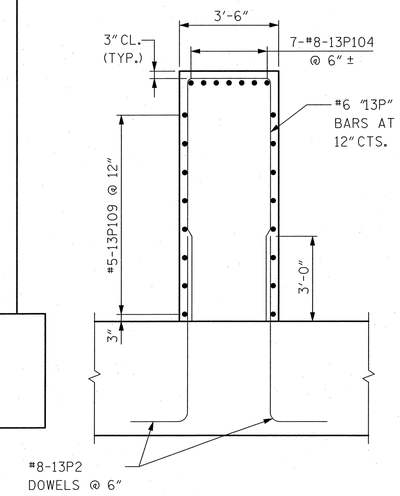

SECTION P-P

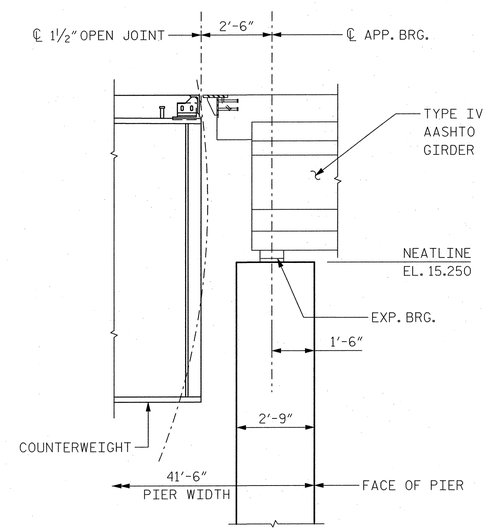

SECTION Q-Q

NOTES:

1. FOR LOCATION OF SECTIONS L-L AND M-M, SEE DWG. B111.
2. FOR LOCATION OF SECTION N-N, SEE DWG. B109.
3. FOR LOCATION OF SECTION Q-Q, SEE DWGS. B120 AND B134.

PROJECT NO. B-2532

CRAVEN COUNTY

STATION: 31+21.29 -L-

STATE OF NORTH CAROLINA
DEPARTMENT OF TRANSPORTATION
RALEIGH, NC

SOUTH BASCULE PIER 13
SECTIONS AND DETAILS

NORTH CAROLINA PROFESSIONAL SEAL 12916 ENGINEER PAUL J. BARBER 10/6/2006

HNTB NORTH CAROLINA, P.C.
343 E. Six Forks Rd., Suite 200, Raleigh, N.C. 27609

DRAWN BY JB DATE 10/06
CHECKED BY GT DATE 10/06

DWG. NO. B121

REVISIONS						SHEET NO.
NO.	BY	DATE	NO.	BY	DATE	S-142
1			3			TOTAL SHEETS
2			4			348

jaip AT W10072
19-OCT-2006 11:24
jWoodrA2873 - Alfred Cunningham\OSHN 1001: Submission\B2532_50_B121_P13Details.dgn

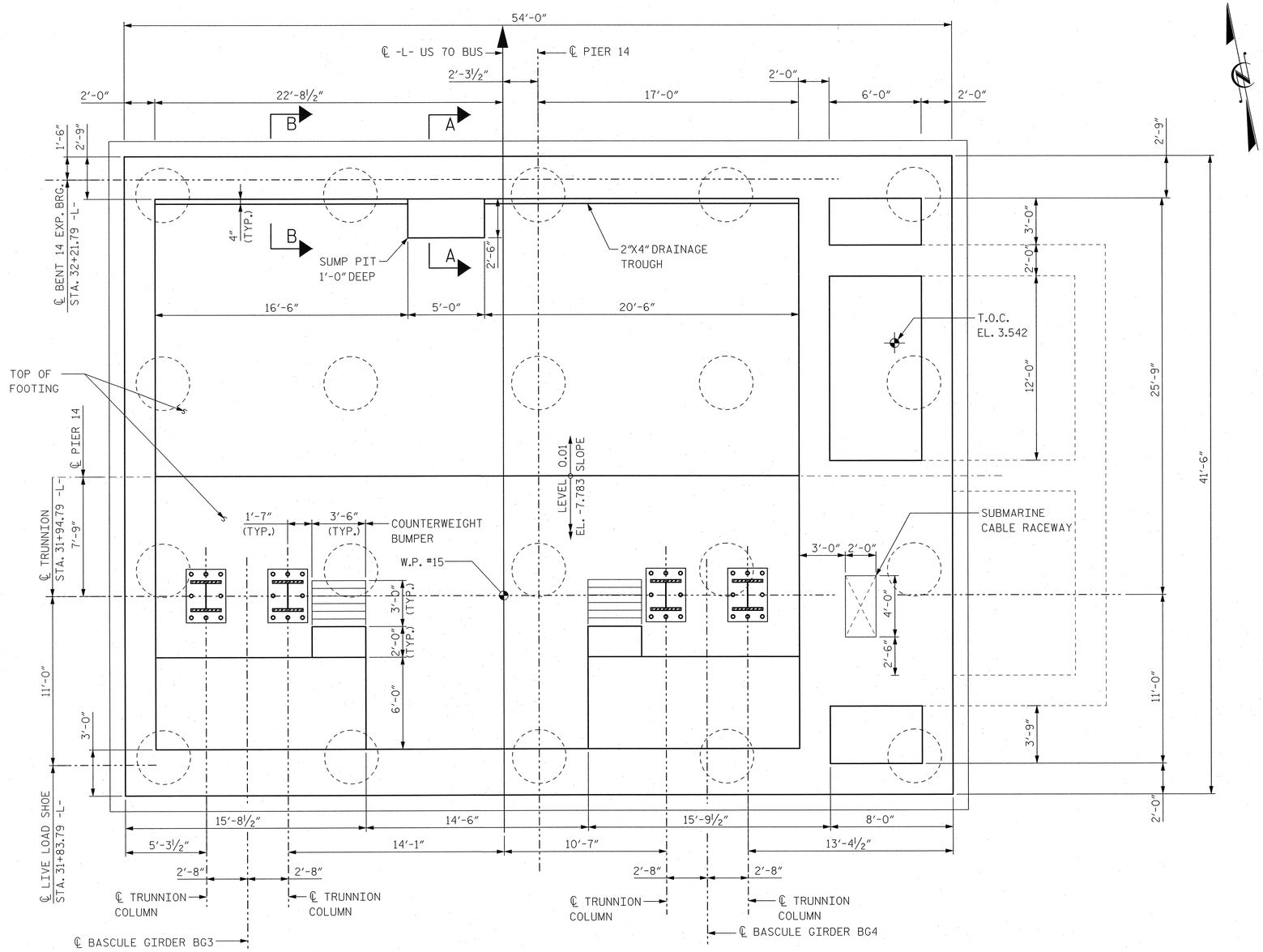

PIER 14 FLOOR LEVEL PLAN

AT TOP OF FOOTING

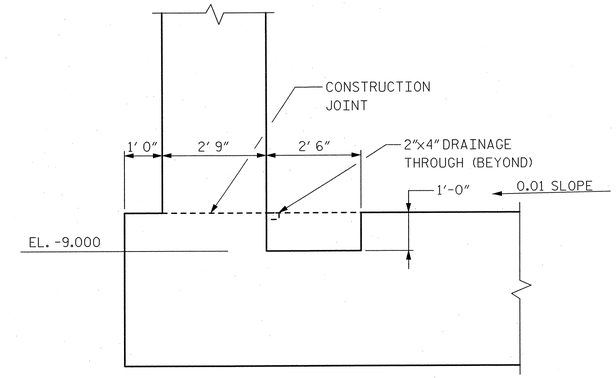

SECTION A-A

AT SUMP PIT

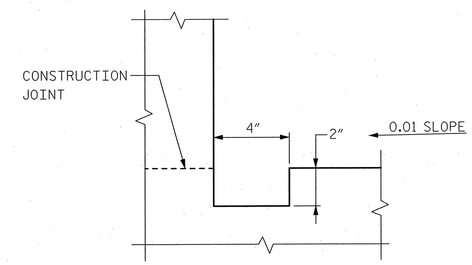

SECTION B-B

AT DRAINAGE TROUGH

NOTES:

1. TOP OF FOOTING SHALL BE SLOPED ⅛"/FT MIN. TO PROVIDE DRAINAGE TO SUMP PIT AS SHOWN.
2. FOR TRUNNION SUPPORT DETAILS, SEE DWGS. B156 AND B157.
3. FOR BUMPER BLOCK DETAILS, SEE DWG. B135.
4. FOR FOOTING AND DRILLED PIER LAYOUT PLAN, SEE DWG. B106.
5. FOR PIER 14 FLOOR LEVEL REINFORCEMENT DETAILS, SEE DWG. B123.

PROJECT NO. B-2532

CRAVEN **COUNTY**

STATION: 31+21.29 -L-

NORTH CAROLINA PROFESSIONAL ENGINEER SEAL 12916 PAUL J. BARBER 12/3/06

STATE OF NORTH CAROLINA
DEPARTMENT OF TRANSPORTATION
RALEIGH, NC

NORTH BASCULE PIER 14
FLOOR LEVEL PLAN

HNTB NORTH CAROLINA, P.C.
343 E. Six Forks Rd., Suite 200, Raleigh, N.C. 27609

DRAWN BY SPL DATE 10/06
CHECKED BY SL DATE 10/06

DWG. NO. **B122**

REVISIONS						SHEET NO.
NO.	BY	DATE	NO.	BY	DATE	S-143
1			3			TOTAL SHEETS
2			4			348

Delta AT WKDOT2
DGN 07-06-06 8:20
JScadd 4.2SP3 - Alfred Cunningham\DGN\1002_Submission\B2532_SD_B122_P14FlrplanDgn

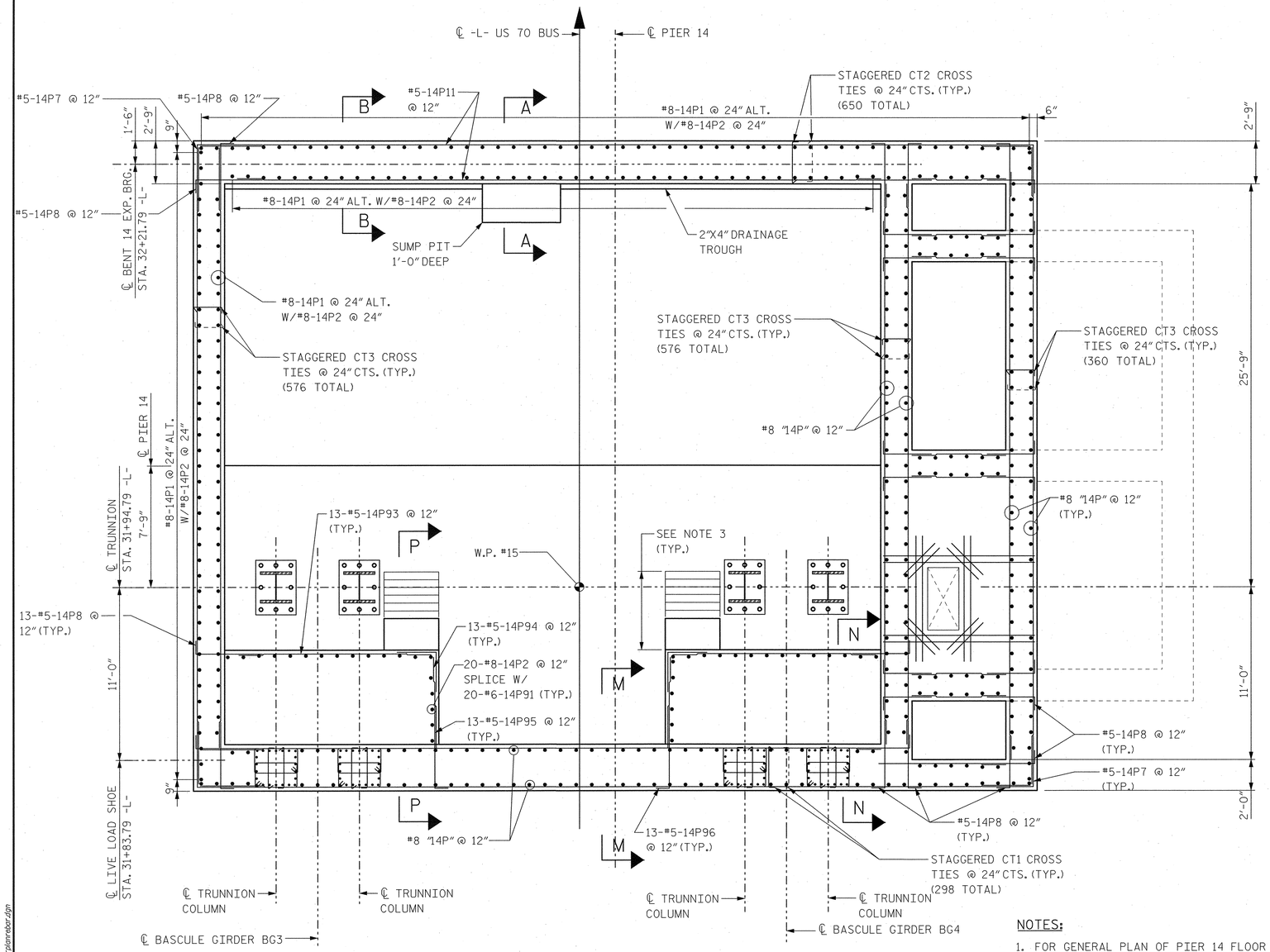

PIER 14 FLOOR LEVEL REINFORCEMENT PLAN

AT TOP OF FOOTING

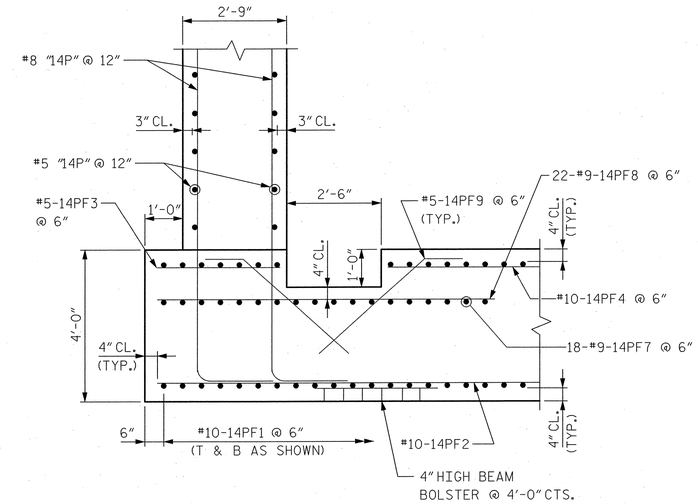

SECTION A-A

AT SUMP PIT

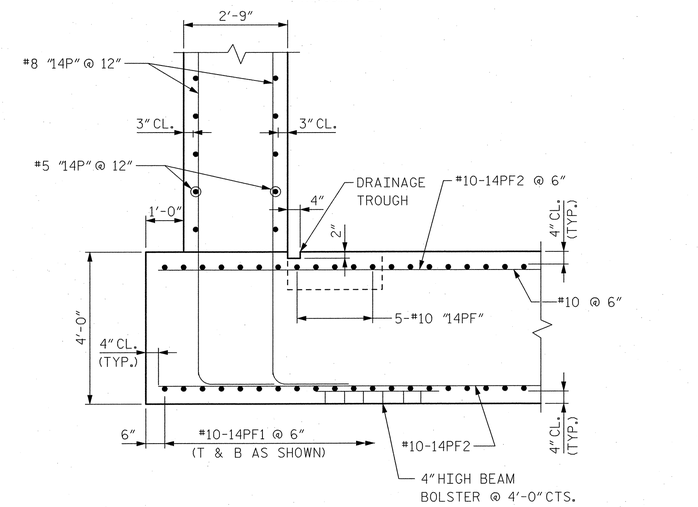

SECTION B-B

AT DRAINAGE TROUGH

NOTES:

1. FOR GENERAL PLAN OF PIER 14 FLOOR LEVEL, SEE DWG. B122.
2. FOR FOOTING REINFORCEMENT AND DRILLED PIER LAYOUT PLAN, SEE DWG. B106.
3. FOR BUMPER BLOCK REINFORCEMENT DETAILS, SEE DWG. B135.
4. FOR PIER 14 BAR LISTS AND BILL OF MATERIALS, SEE DWGS. B195 AND B196.
5. FOR SECTIONS M-M, N-N AND P-P, SEE DWG. B135.
6. FOR SCHEMATIC DIAGRAM OF CROSS TIE LOCATIONS, SEE DWG. B128.

PROJECT NO. B-2532

CRAVEN COUNTY

STATION: 31+21.29 -L-

STATE OF NORTH CAROLINA
DEPARTMENT OF TRANSPORTATION
RALEIGH, NC

NORTH BASCULE PIER 14
FLOOR LEVEL
REINFORCEMENT PLAN

NORTH CAROLINA PROFESSIONAL SEAL 12916 ENGINEER PAUL J. BARBER 10/26/06

HNTB NORTH CAROLINA, P.C.
343 E. Six Forks Rd., Suite 200, Raleigh, N.C. 27609

DRAWN BY SPL DATE 10/06
CHECKED BY SL DATE 10/06

DWG. NO. B123

REVISIONS						
NO.	BY	DATE	NO.	BY	DATE	
1			3			
2			4			

SHEET NO. S-144
TOTAL SHEETS 348

Field AT WYDOT2
Date 10/26/2006 2:44
JKodell42673 - Alfred Cunningham\DGN\10021_Submission\B2532_SD_B123_P14flrplanrebar.dgn

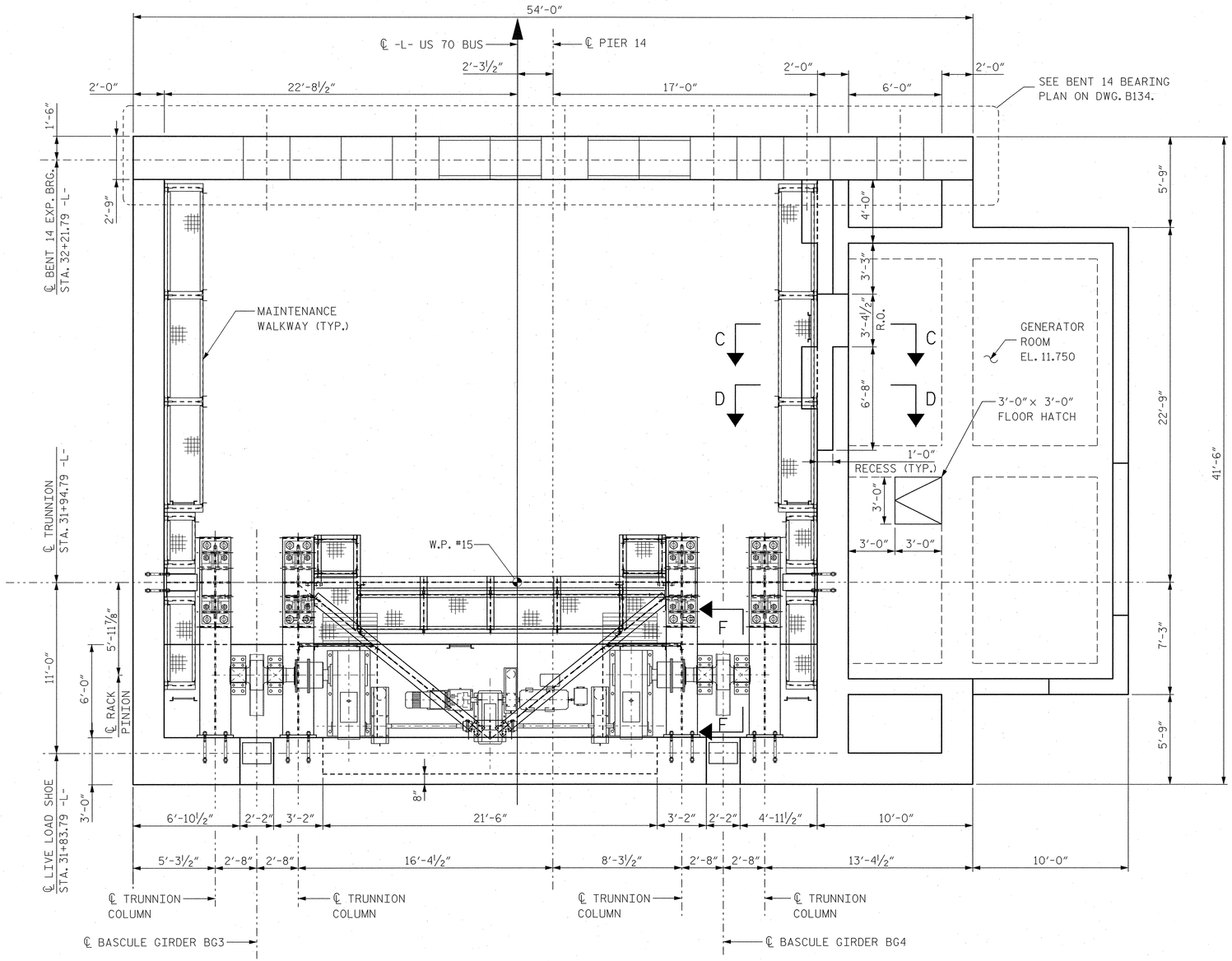

PIER 14 TRUNNION SUPPORT LEVEL PLAN

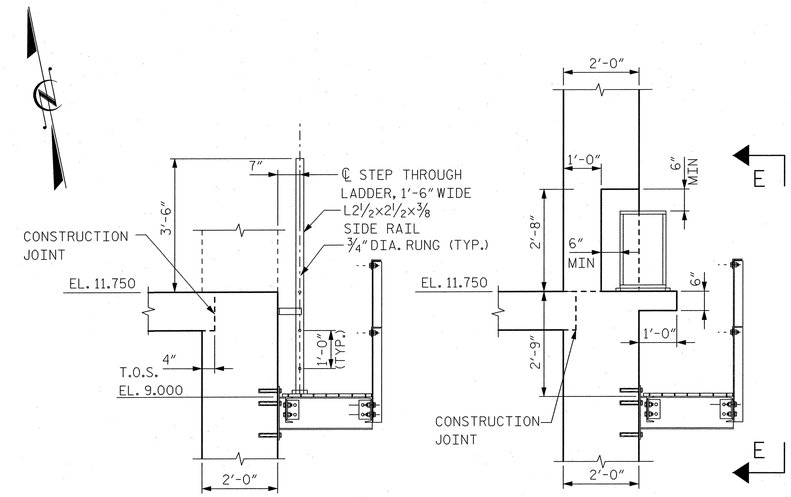

SECTION C-C

SECTION D-D

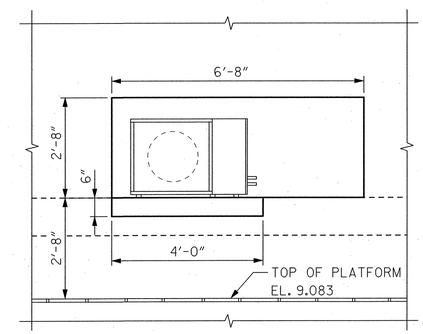

SECTION E-E

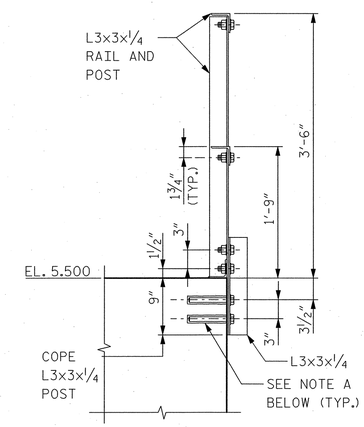

SECTION F-F

NOTE A - CORE DRILL ⅞" DIA. x 6" DEEP HOLE FOR ¾" ANCHOR BOLT AND EPOXY PER ADHESIVE ANCHOR SPECFICATIONS.

NOTES:

1. FOR TRUNNION SUPPORT DETAILS, SEE DWGS. B156 AND B157.
2. FOR LIVE LOAD SHOE DETAILS, SEE DWG. B179.
3. FOR APPROACH SPAN BENT 14 BEARING DETAILS, SEE DWG. B134.
4. FOR MAINTENANCE WALKWAYS, LADDERS, AND RAILING DETAILS, SEE DWGS. B136 TO B139.
5. FOR PIER 14 TRUNNION SUPPORT LEVEL REINFORCEMENT DETAILS, SEE DWG. B125.

NORTH CAROLINA PROFESSIONAL SEAL 12916 ENGINEER PAUL J. BARGER 10/20/06

PROJECT NO. B-2532

CRAVEN COUNTY

STATION: 31+21.29 -L-

STATE OF NORTH CAROLINA
DEPARTMENT OF TRANSPORTATION
RALEIGH, NC

NORTH BASCULE PIER 14 TRUNNION SUPPORT LEVEL PLAN

HNTB NORTH CAROLINA, P.C.
343 E. Six Forks Rd., Suite 200, Raleigh, N.C. 27609

DRAWN BY SPL DATE 10/06
CHECKED BY SL DATE 10/06

DWG. NO. B124

REVISIONS						SHEET NO.
NO.	BY	DATE	NO.	BY	DATE	S-145
1			3			TOTAL SHEETS
2			4			348

Julia AT N10072
10/20/2006 7:24
J:\cad\42873 - Alfred Cunningham\DGN\1001_Submission\B2532_SD_B124_P14trunpland.dgn

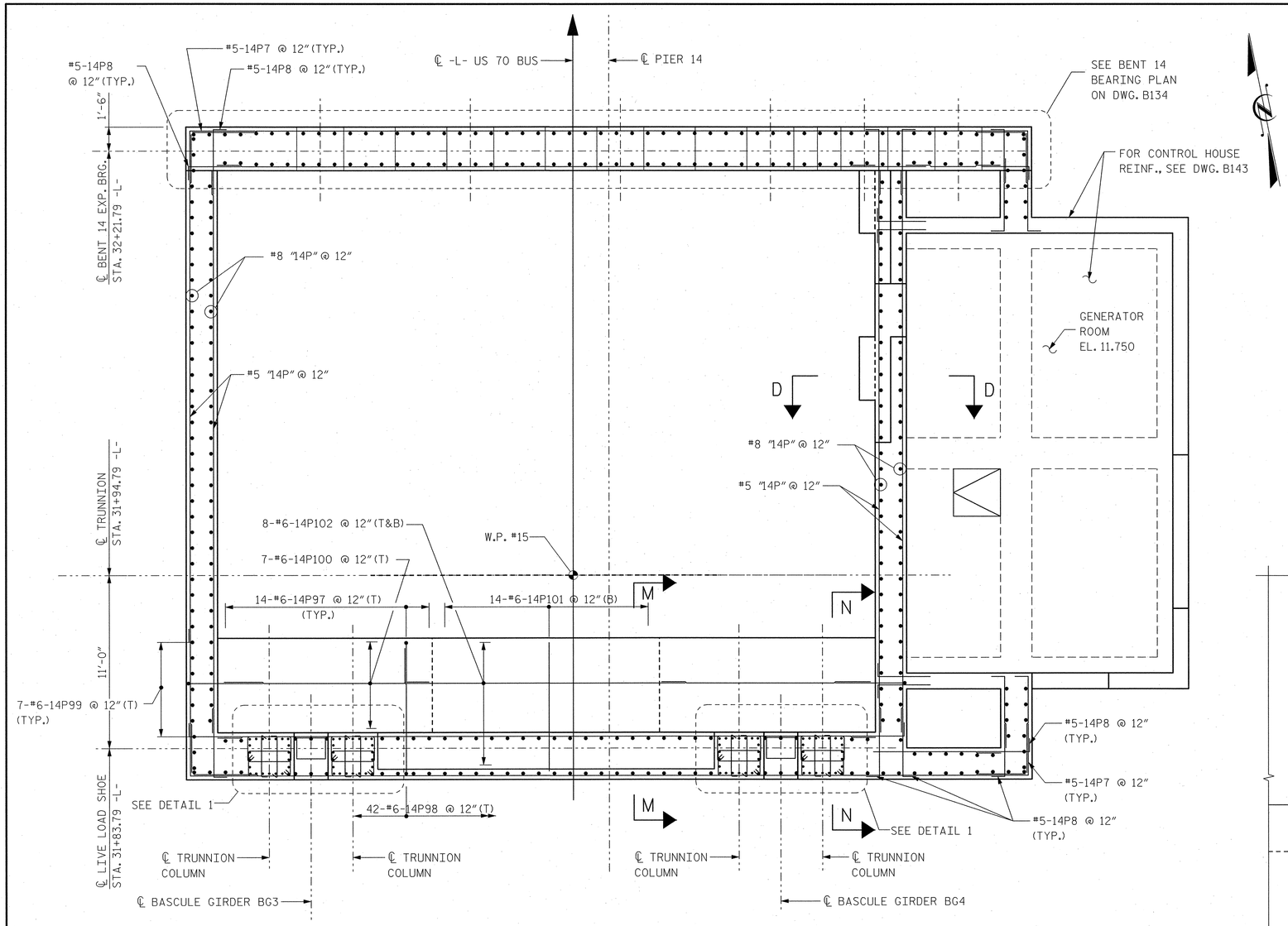

PIER 14 TRUNNION SUPPORT REINFORCEMENT LEVEL PLAN

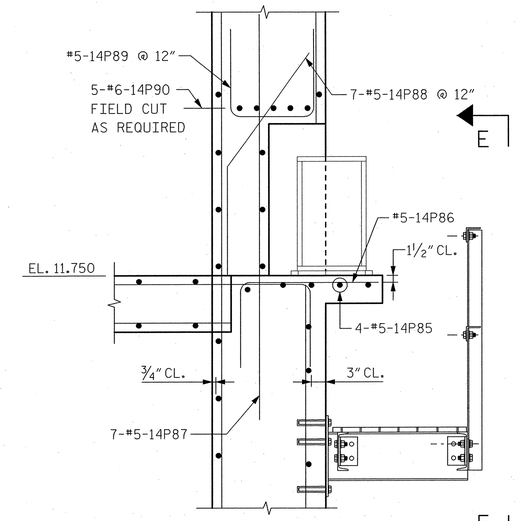

SECTION D-D

AT 2 LOCATIONS

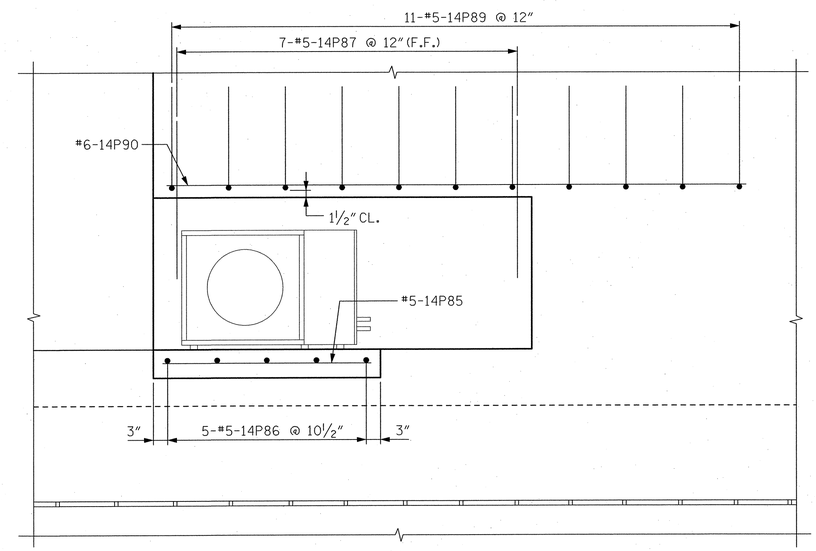

SECTION E-E

AT 2 LOCATIONS

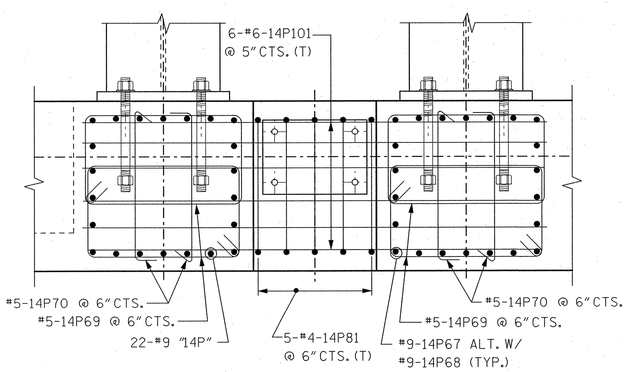

DETAIL 1

NOTES:

1. FOR GENERAL PLAN OF PIER 14 AT TRUNNION SUPPORT LEVEL, SEE DWG. B124.
2. FOR PIER 14 BAR LISTS AND BILL OF MATERIALS, SEE DWGS. B195 AND B196.
3. FOR SECTIONS M-M AND N-N, SEE DWG. B135.

PROJECT NO. B-2532

CRAVEN COUNTY

STATION: 31+21.29 -L-

NORTH CAROLINA PROFESSIONAL ENGINEER SEAL 12916 PAUL J. BARBER

STATE OF NORTH CAROLINA
DEPARTMENT OF TRANSPORTATION
RALEIGH, NC

NORTH BASCULE PIER 14 TRUNNION SUPPORT LEVEL REINFORCEMENT PLAN

HNTB NORTH CAROLINA, P.C.
343 E. Six Forks Rd., Suite 200, Raleigh, N.C. 27609

DRAWN BY SPL DATE 10/06
CHECKED BY SL DATE 10/06
DWG. NO. B125

REVISIONS						SHEET NO.
NO.	BY	DATE	NO.	BY	DATE	S-146
1			3			TOTAL SHEETS
2			4			348

jelio AT W10007
Project: B2532
USCOM 42873 Alfred Cunningham\DGN\1002_Submission\B2532_SD_B125_P14trunplanrebar.dgn

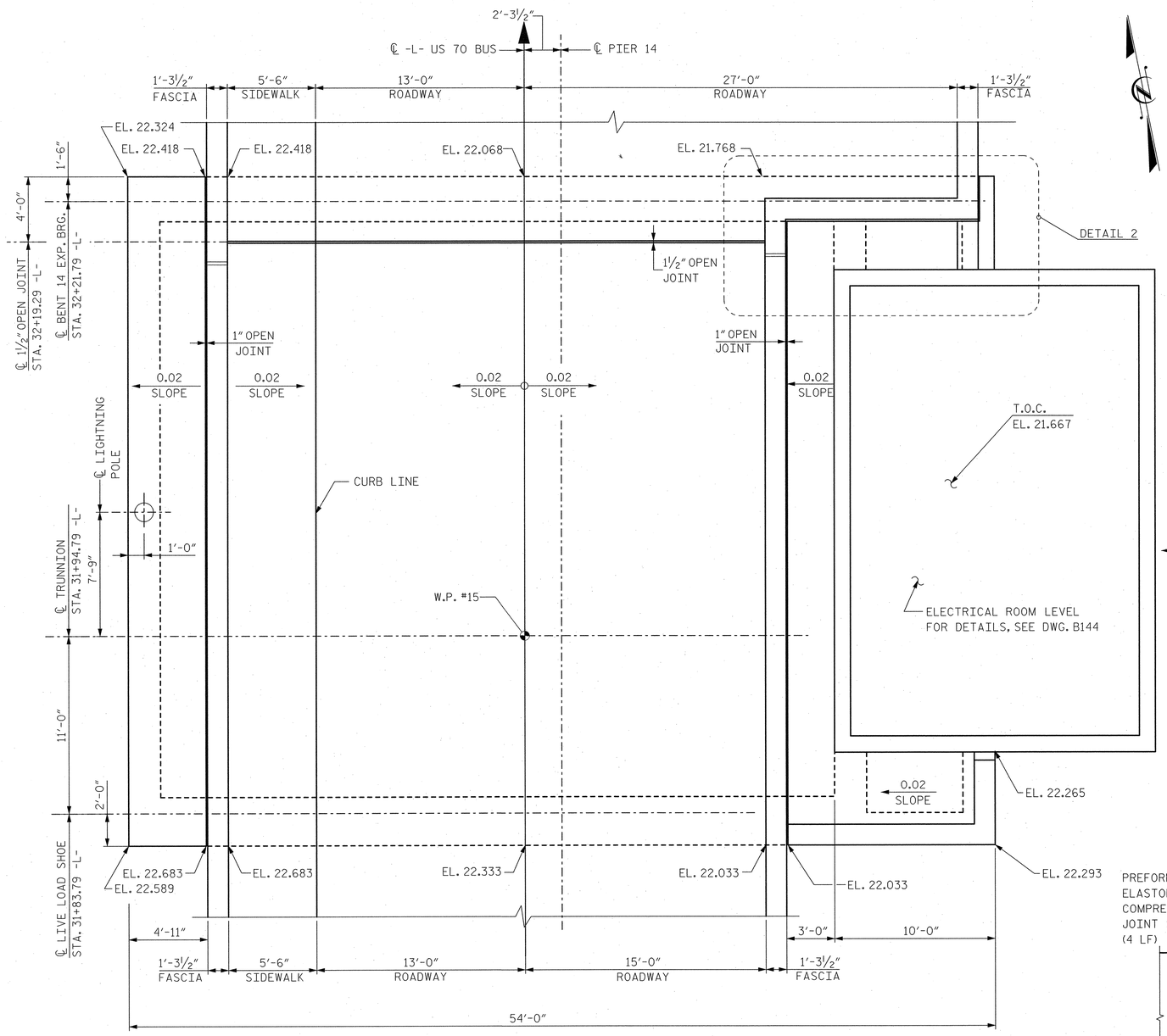

PIER 14 ROADWAY LEVEL PLAN

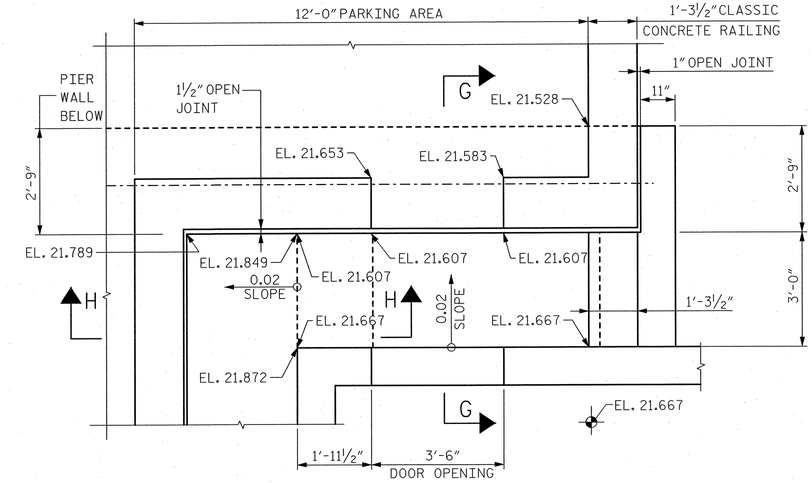

DETAIL 2 - PARTIAL PLAN

AT CONTROL HOUSE ENTRY

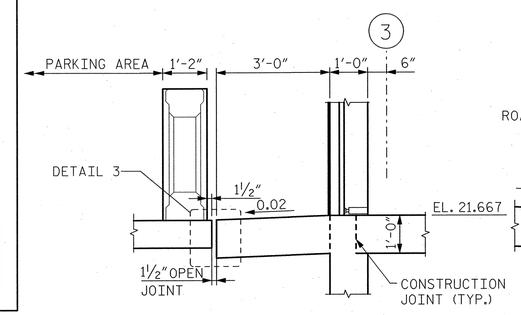

SECTION G-G

AT CONTROL HOUSE SAFETY WALK
(LOOKING EAST)

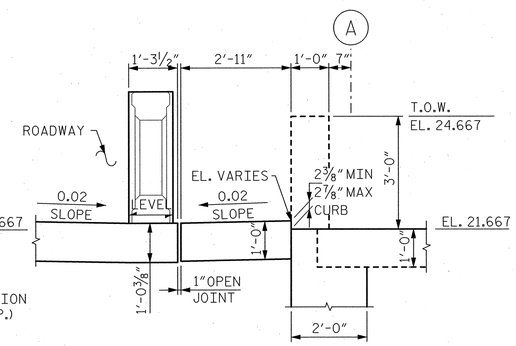

SECTION H-H

AT CONTROL HOUSE SAFETY WALK
(LOOKING NORTH)

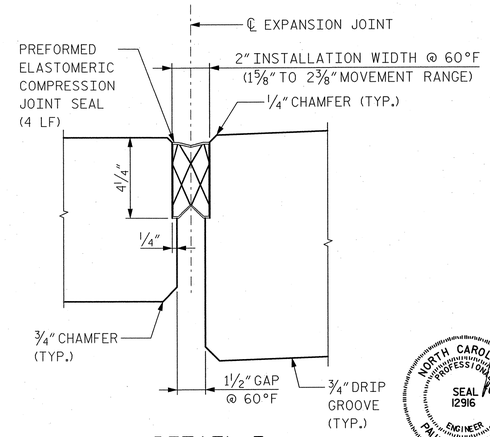

DETAIL 3

NOTES:

1. FOR NORTH BASCULE SPAN DECK PLAN, SEE DWG. B183.
2. FOR PIER 14 CLASSIC CONCRETE RAILING DETAILS, SEE DWG. B188.
3. FOR LIGHTNING POLE ANCHORAGE DETAILS, SEE DWG. B190.
4. FOR PIER 14 ROADWAY LEVEL REINFORCEMENT DETAILS, SEE DWG. B127.

NORTH CAROLINA PROFESSIONAL SEAL 12916 ENGINEER PAUL J. BARBER

PROJECT NO. B-2532
CRAVEN COUNTY
STATION: 31+21.29 -L-

STATE OF NORTH CAROLINA
DEPARTMENT OF TRANSPORTATION
RALEIGH, NC

NORTH BASCULE PIER 14
ROADWAY LEVEL PLAN

HNTB NORTH CAROLINA, P.C.
343 E. Six Forks Rd., Suite 200, Raleigh, N.C. 27609

DRAWN BY SPL DATE 10/06
CHECKED BY SL DATE 10/06
DWG. NO. B126

REVISIONS						SHEET NO.
NO.	BY	DATE	NO.	BY	DATE	S-147
1			3			TOTAL SHEETS
2			4			348

Jobs - AT WYDOT2
02-OCT-2006 18:33
cbooth/ACS2_1 Alfred Cunningham\DGN\1003_Submission\B2532_S0_B126_P14roadwaylandgn

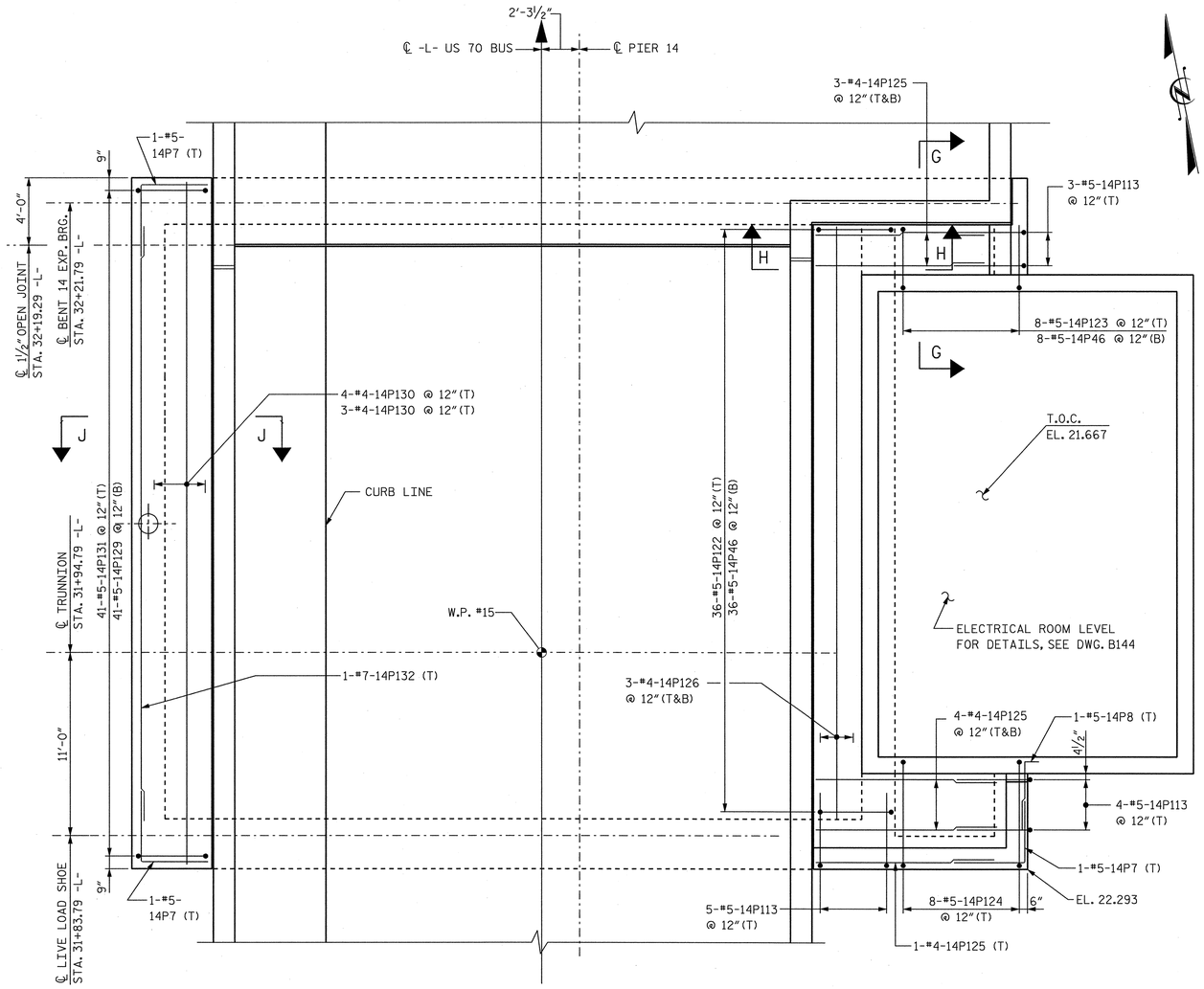

PIER 14 ROADWAY LEVEL REINFORCEMENT PLAN

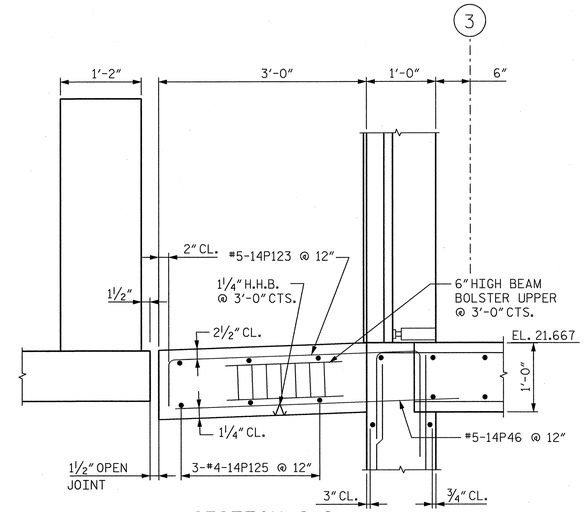

SECTION G-G

AT CONTROL HOUSE SAFETY WALK (LOOKING EAST)

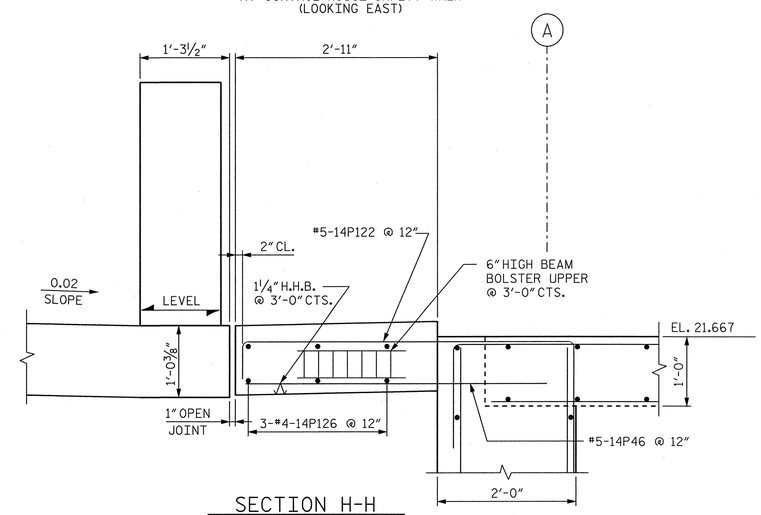

SECTION H-H

AT CONTROL HOUSE SAFETY WALK (LOOKING NORTH)

PROJECT NO. B-2532

CRAVEN **COUNTY**

STATION: 31+21.29 -L-

NOTES:

1. FOR NORTH BASCULE SPAN DECK PLAN, SEE DWG. B183.
2. FOR PIER 14 CLASSIC CONCRETE BRIDGE RAILING ELEVATIONS, SEE DWG. B188.
3. FOR PIER 14 BAR LISTS AND BILL OF MATERIALS, SEE DWGS. B195 AND B196.
4. FOR SECTION J-J, SEE DWG. B131.

NORTH CAROLINA PROFESSIONAL SEAL 12916 ENGINEER PAUL J. BARBER 10/16/06

STATE OF NORTH CAROLINA
DEPARTMENT OF TRANSPORTATION
RALEIGH, NC

NORTH BASCULE PIER 14
ROADWAY LEVEL
REINFORCEMENT PLAN

HNTB NORTH CAROLINA, P.C.
343 E. Six Forks Rd., Suite 200, Raleigh, N.C. 27609

DRAWN BY SPL DATE 10/06
CHECKED BY SL DATE 10/06

DWG. NO. **B127**

REVISIONS						SHEET NO.
NO.	BY	DATE	NO.	BY	DATE	S-148
1			3			TOTAL SHEETS
2			4			348

slam
AT NYOD111
16:07:20PM 1/4/10
J:\cadd\42873_Alfred Cunningham\DGN\100% Submission\B2532_SD_B127_P14rdwyplanrebar.dgn

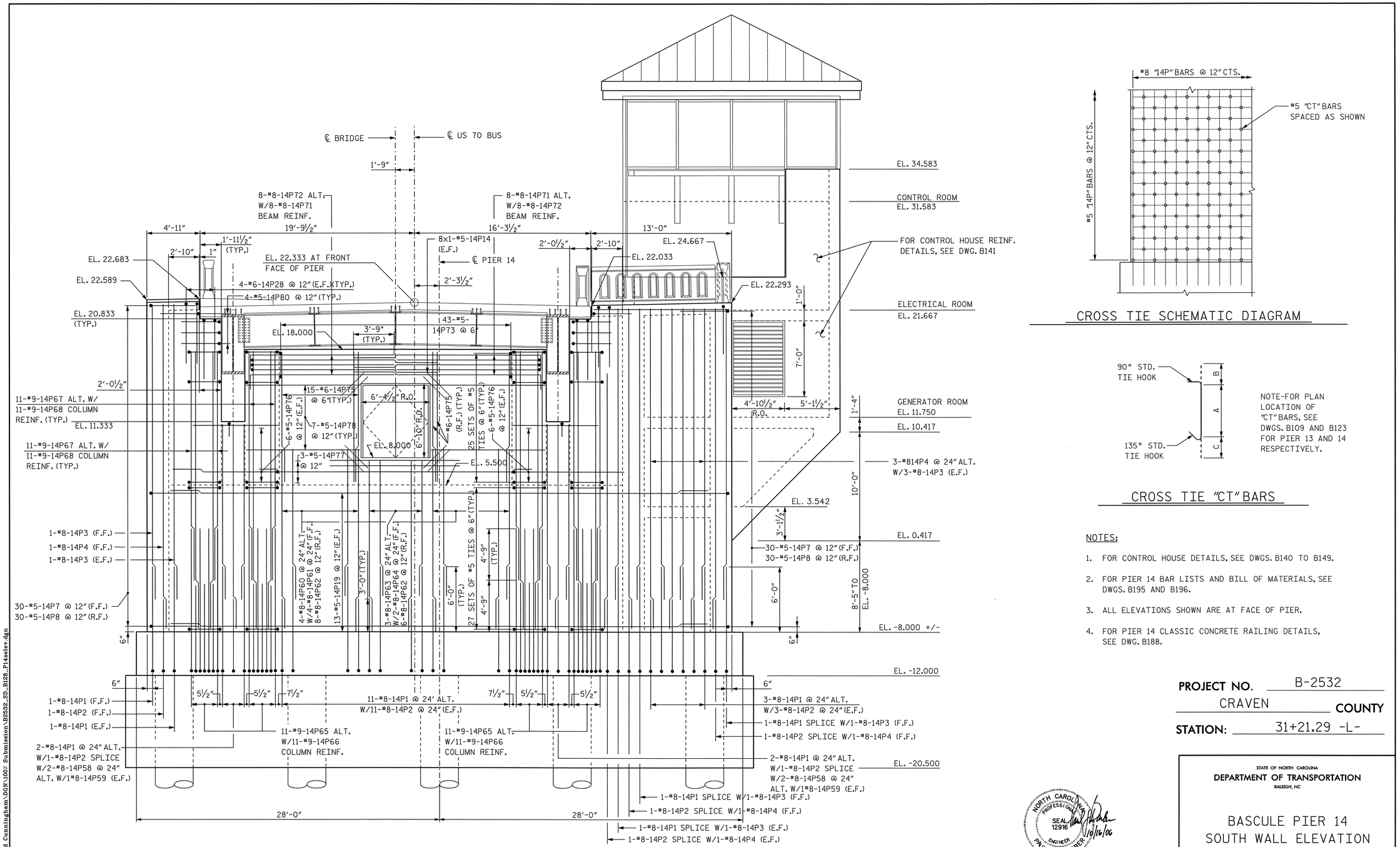

BASCULE PIER 14 - SOUTH ELEVATION

(LOOKING NORTH)

CROSS TIE SCHEMATIC DIAGRAM

NOTE-FOR PLAN LOCATION OF "CT" BARS, SEE DWGS. B109 AND B123 FOR PIER 13 AND 14 RESPECTIVELY.

CROSS TIE "CT" BARS

NOTES:

1. FOR CONTROL HOUSE DETAILS, SEE DWGS. B140 TO B149.
2. FOR PIER 14 BAR LISTS AND BILL OF MATERIALS, SEE DWGS. B195 AND B196.
3. ALL ELEVATIONS SHOWN ARE AT FACE OF PIER.
4. FOR PIER 14 CLASSIC CONCRETE RAILING DETAILS, SEE DWG. B188.

PROJECT NO. B-2532

CRAVEN COUNTY

STATION: 31+21.29 -L-

STATE OF NORTH CAROLINA
DEPARTMENT OF TRANSPORTATION
RALEIGH, NC

BASCULE PIER 14
SOUTH WALL ELEVATION

NORTH CAROLINA PROFESSIONAL SEAL 12916 ENGINEER PAUL J. BARBER 10/16/06

HNTB NORTH CAROLINA, P.C.
343 E. Six Forks Rd., Suite 200, Raleigh, N.C. 27609

DRAWN BY SPL DATE 10/06
CHECKED BY SL DATE 10/06

DWG. NO. B128

REVISIONS						
NO.	BY	DATE	NO.	BY	DATE	
1			3			
2			4			

SHEET NO. S-149

TOTAL SHEETS 348

sign AT NYODIII
16-Oct-2006 14:49
J:\cadd\42873_Alfred Cunningham\DGN\100% Submission\B2532_SD_B128_P14selev.dgn

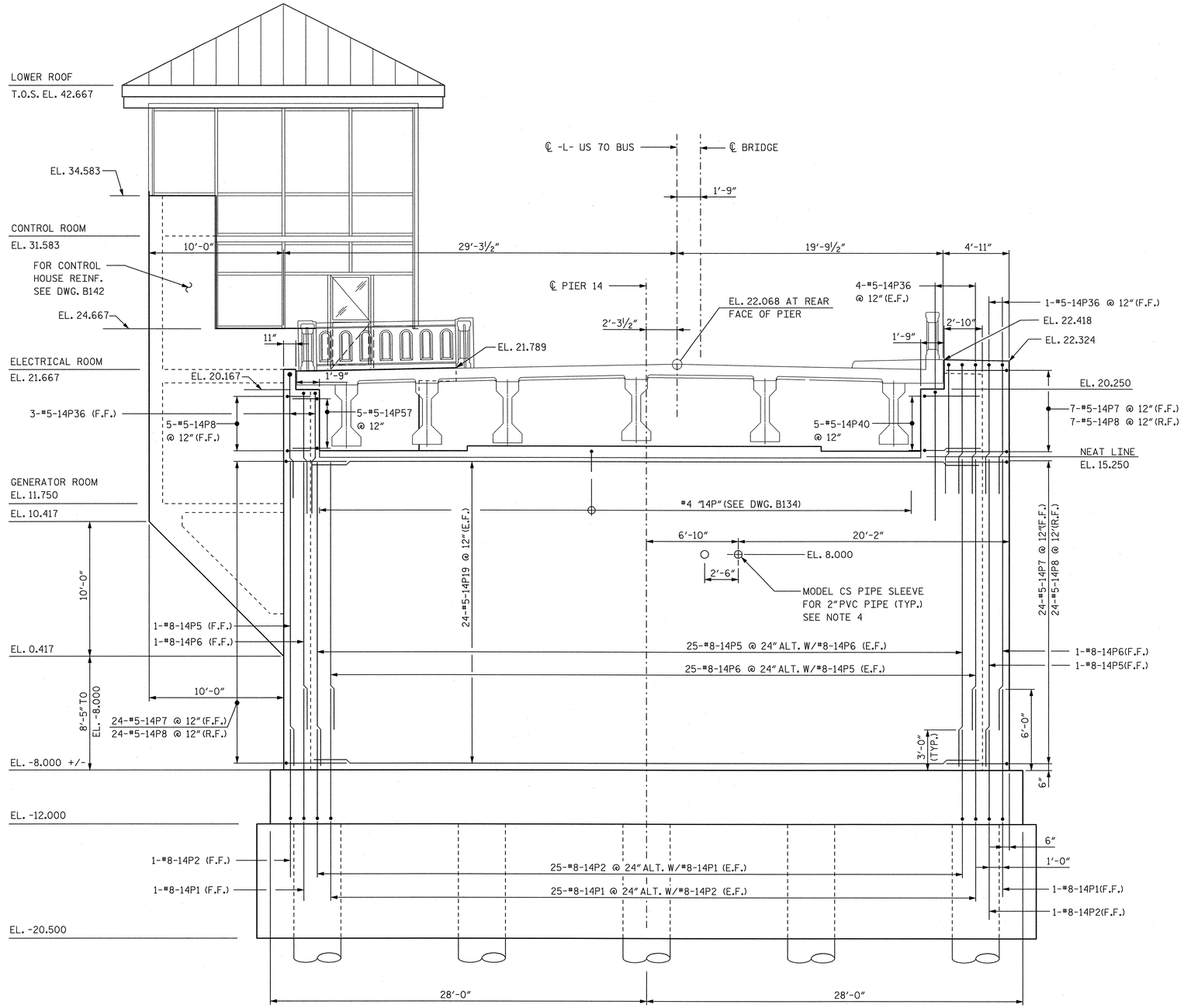

BASCULE PIER 14 - NORTH ELEVATION

(LOOKING SOUTH)

NOTES:

1. FOR CONTROL HOUSE DETAILS, SEE DWGS. B140 TO B149.
2. FOR PIER 14 BAR LISTS AND BILL OF MATERIALS, SEE DWGS. B195 AND B196.
3. ALL ELEVATIONS SHOWN ARE AT FACE OF PIER.
4. FOR PIPE SLEEVE DETAIL, SEE DWG. M18.

PROJECT NO. B-2532

CRAVEN COUNTY

STATION: 31+21.29 -L-

NORTH CAROLINA PROFESSIONAL SEAL 12916 ENGINEER PAUL J. BARBER 10/16/06

STATE OF NORTH CAROLINA
DEPARTMENT OF TRANSPORTATION
RALEIGH, NC

BASCULE PIER 14
NORTH WALL ELEVATION

HNTB NORTH CAROLINA, P.C.
343 E. Six Forks Rd., Suite 200, Raleigh, N.C. 27609

DRAWN BY SPL DATE 10/06
CHECKED BY SL DATE 10/06

DWG. NO. B129

REVISIONS						SHEET NO.
NO.	BY	DATE	NO.	BY	DATE	S-150
1			3			TOTAL SHEETS
2			4			348

slam
14-Oct-2006 14:40
j:\cadd\42873 - Alfred Cunningham\DGN\007 Submission\B2532_SD_B129_P14nelev.dgn
AT NYOD111

NOTES:

1. FOR CONTROL HOUSE DETAILS, SEE DWGS. B140 TO B149.
2. FOR PIER 14 BAR LISTS AND BILL OF MATERIALS, SEE DWGS. B195 AND B196.
3. ALL ELEVATIONS SHOWN ARE AT FACE OF PIER.
4. FOR PIER 14 CLASSIC CONCRETE RAILING DETAILS, SEE DWG. B188.
5. FOR SECTION K-K, SEE DWG. B132.

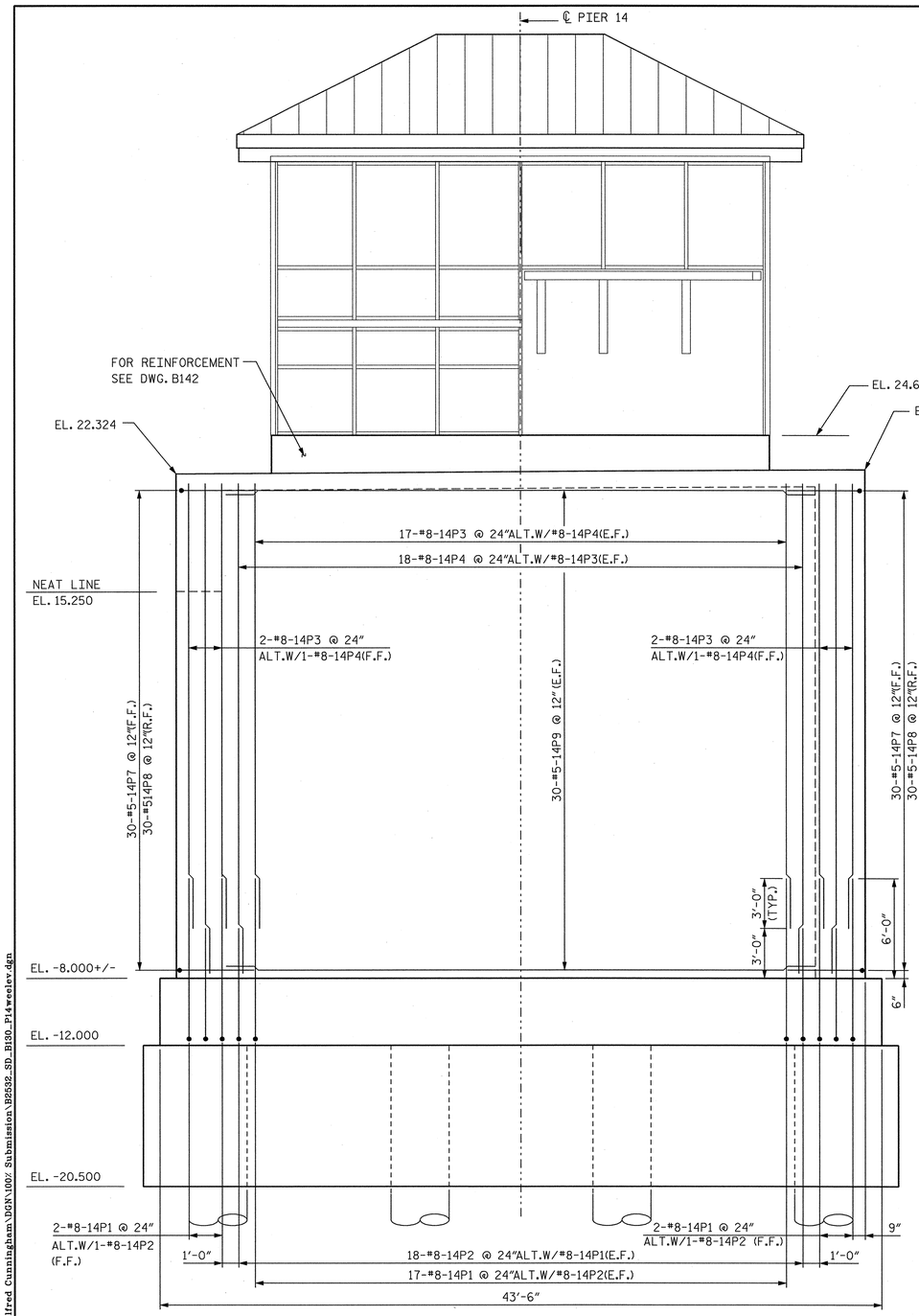

BASCULE PIER 14 - WEST ELEVATION

(LOOKING EAST)

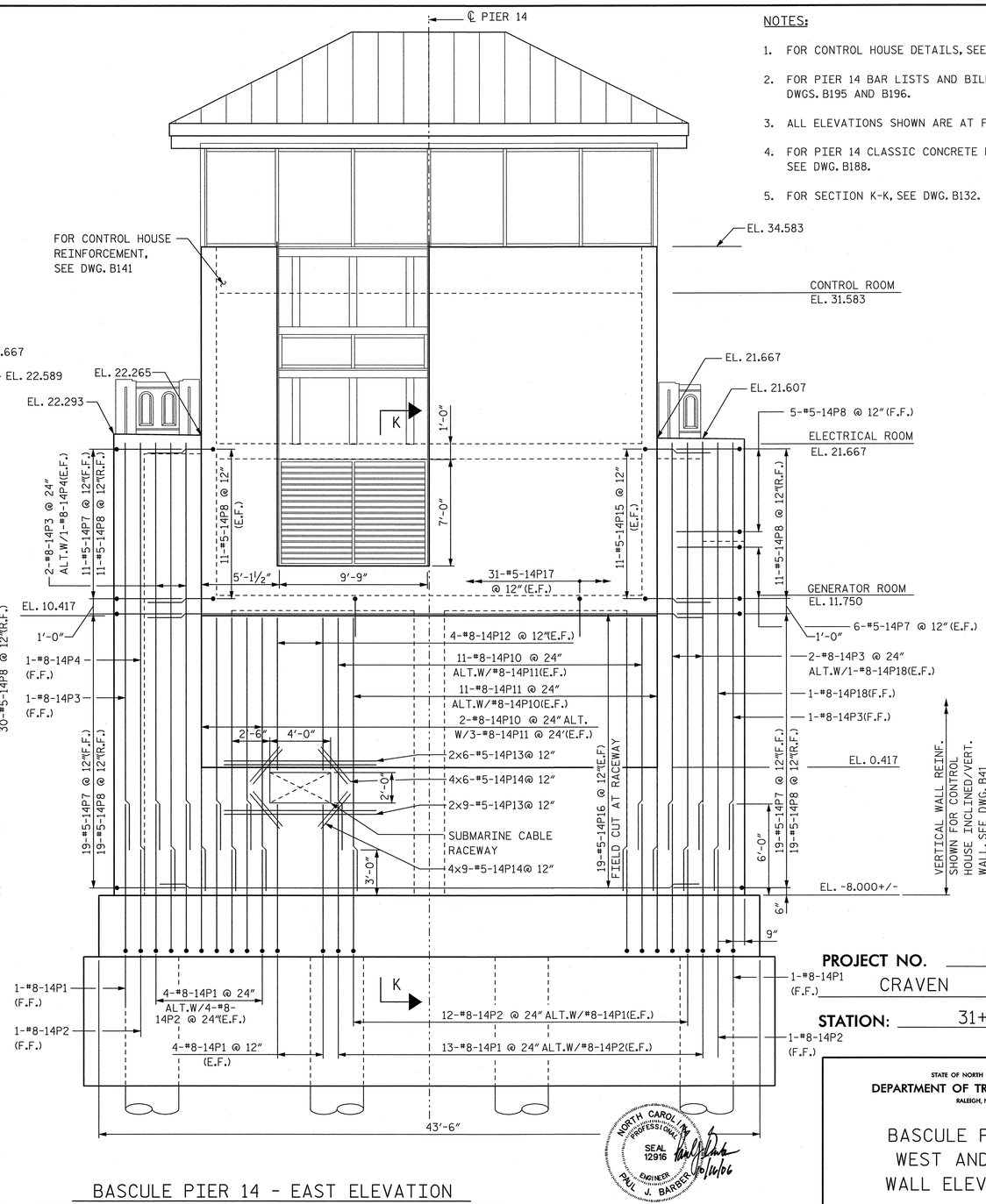

BASCULE PIER 14 - EAST ELEVATION

(LOOKING WEST)

PROJECT NO. B-2532

COUNTY CRAVEN

STATION: 31+21.29 -L-

STATE OF NORTH CAROLINA
DEPARTMENT OF TRANSPORTATION
RALEIGH, NC

BASCULE PIER 14
WEST AND EAST
WALL ELEVATIONS

NORTH CAROLINA PROFESSIONAL SEAL 12916 ENGINEER PAUL J. BARGER 10/16/06

HNTB NORTH CAROLINA, P.C.
343 E. Six Forks Rd., Suite 200, Raleigh, N.C. 27609

DRAWN BY SPL DATE 10/06
CHECKED BY SL DATE 10/06

DWG. NO. B130

REVISIONS						SHEET NO.
NO.	BY	DATE	NO.	BY	DATE	S-151
1			3			TOTAL SHEETS
2			4			348

slan AT NYODI11
15-Oct-2006 14:47
J:\cadd\42873_Alfred Cunningham\DGN\100/ Submission\B2532_SD_B130_P14weelev.dgn

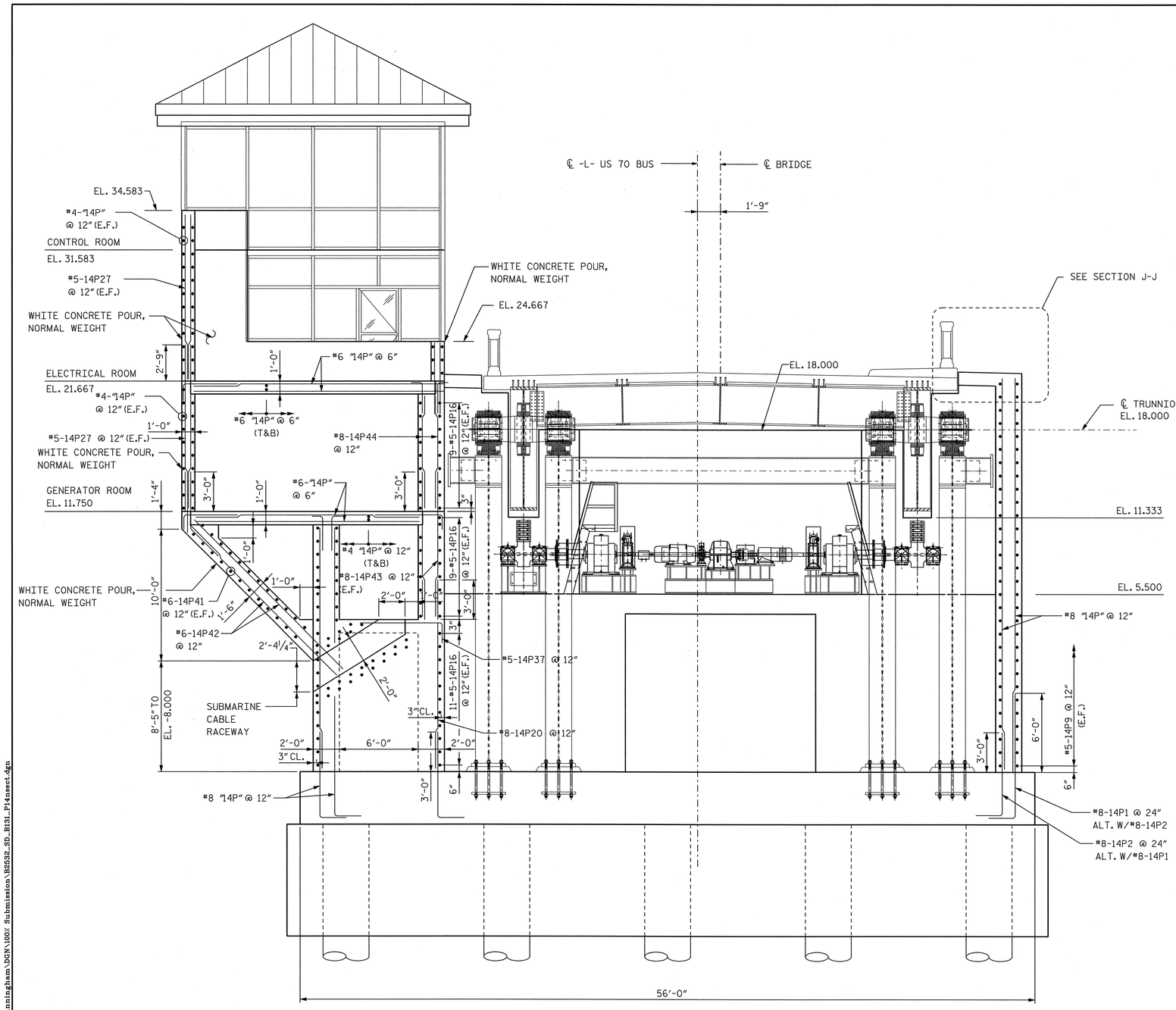

PIER 14 SECTION - (LOOKING SOUTH)

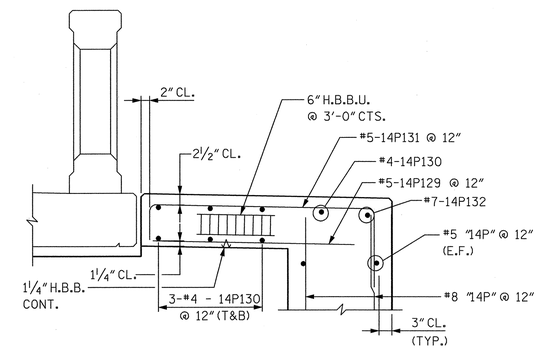

SECTION J-J

NOTES:

1. FOR CONTROL HOUSE DETAILS, SEE DWGS. B140 TO B149.
2. FOR PIER 14 BAR LISTS AND BILL OF MATERIALS, SEE DWGS. B195 AND B196.

PROJECT NO. B-2532

CRAVEN COUNTY

STATION: 31+21.29 -L-

STATE OF NORTH CAROLINA
DEPARTMENT OF TRANSPORTATION
RALEIGH, NC

NORTH BASCULE PIER 14
LONGITUDINAL SECTION
(LOOKING SOUTH)

NORTH CAROLINA PROFESSIONAL SEAL 12916 ENGINEER PAUL J. BARBER 10/16/06

HNTB NORTH CAROLINA, P.C.
343 E. Six Forks Rd., Suite 200, Raleigh, N.C. 27609

DRAWN BY PE DATE 10/06
CHECKED BY GT DATE 10/06

DWG. NO. B131

REVISIONS						SHEET NO.
NO.	BY	DATE	NO.	BY	DATE	S-152
1			3			TOTAL SHEETS
2			4			348

slem
14:07:20 AT NYOD111
J:\cadd\42873 - Alfred Cunningham\DGN\100% Submission\B2532_SD_B131_P14sect.dgn

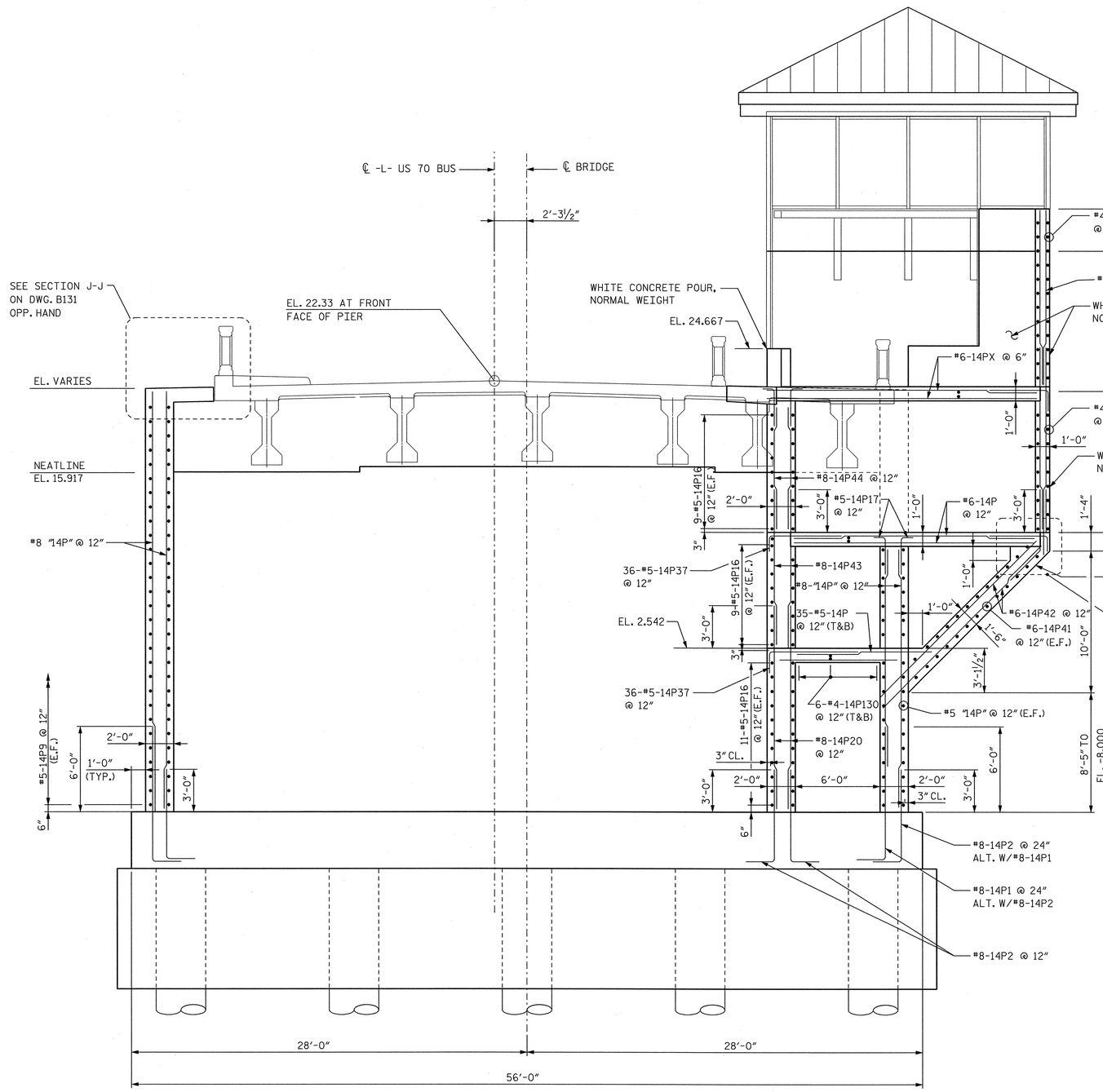

PIER 14 SECTION - (LOOKING NORTH)

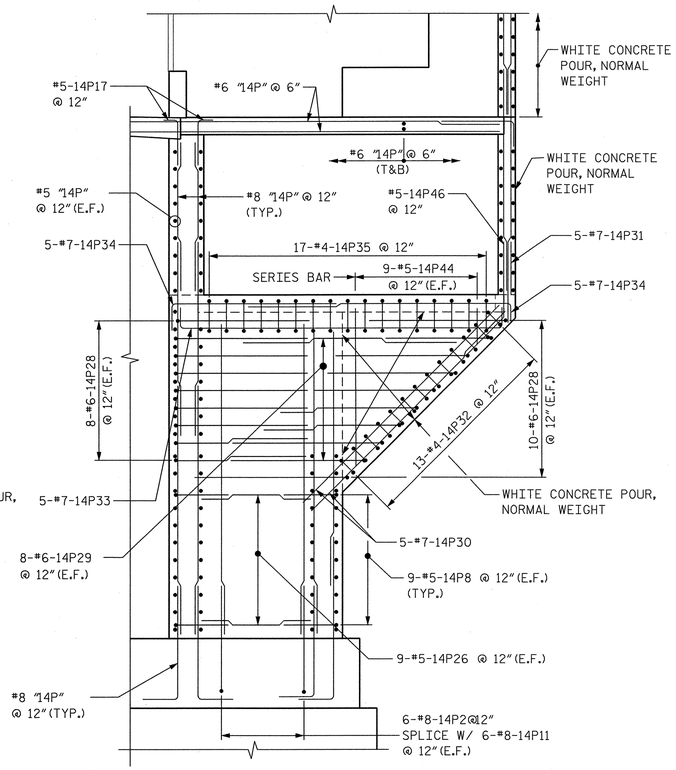

SECTION K-K

NOTES:

1. FOR CONTROL HOUSE DETAILS, SEE DWGS. B140 TO B149.
2. FOR PIER 14 BAR LISTS AND BILL OF MATERIALS, SEE DWGS. B195 AND B196.
3. FOR LOCATION OF SECTION K-K, SEE DWG. B130.

NORTH CAROLINA PROFESSIONAL SEAL 12916 ENGINEER PAUL J. BARBER 10/16/06

PROJECT NO. B-2532

CRAVEN COUNTY

STATION: 31+21.29 -L-

STATE OF NORTH CAROLINA
DEPARTMENT OF TRANSPORTATION
RALEIGH, NC

NORTH BASCULE PIER 14
LONGITUDINAL SECTION
(LOOKING NORTH)

HNTB NORTH CAROLINA, P.C.
343 E. Six Forks Rd., Suite 200, Raleigh, N.C. 27609

DRAWN BY SPL DATE 10/06
CHECKED BY SL DATE 10/06

DWG. NO. B132

REVISIONS						SHEET NO.
NO.	BY	DATE	NO.	BY	DATE	S-153
1			3			TOTAL SHEETS
2			4			348

slam
18-OCT-2006 14:05
j:\cadd\42873 - Alfred Cunningham\DGN\100% Submission\B2532_SD_B132_P14sect.dgn
AT NYOD111

NOTES:

1. FOR PIER 14 BAR LISTS AND BILL OF MATERIALS, SEE DWGS. B195 AND B196.
2. ALL ELEVATIONS SHOWN ARE AT FACE OF PIER.

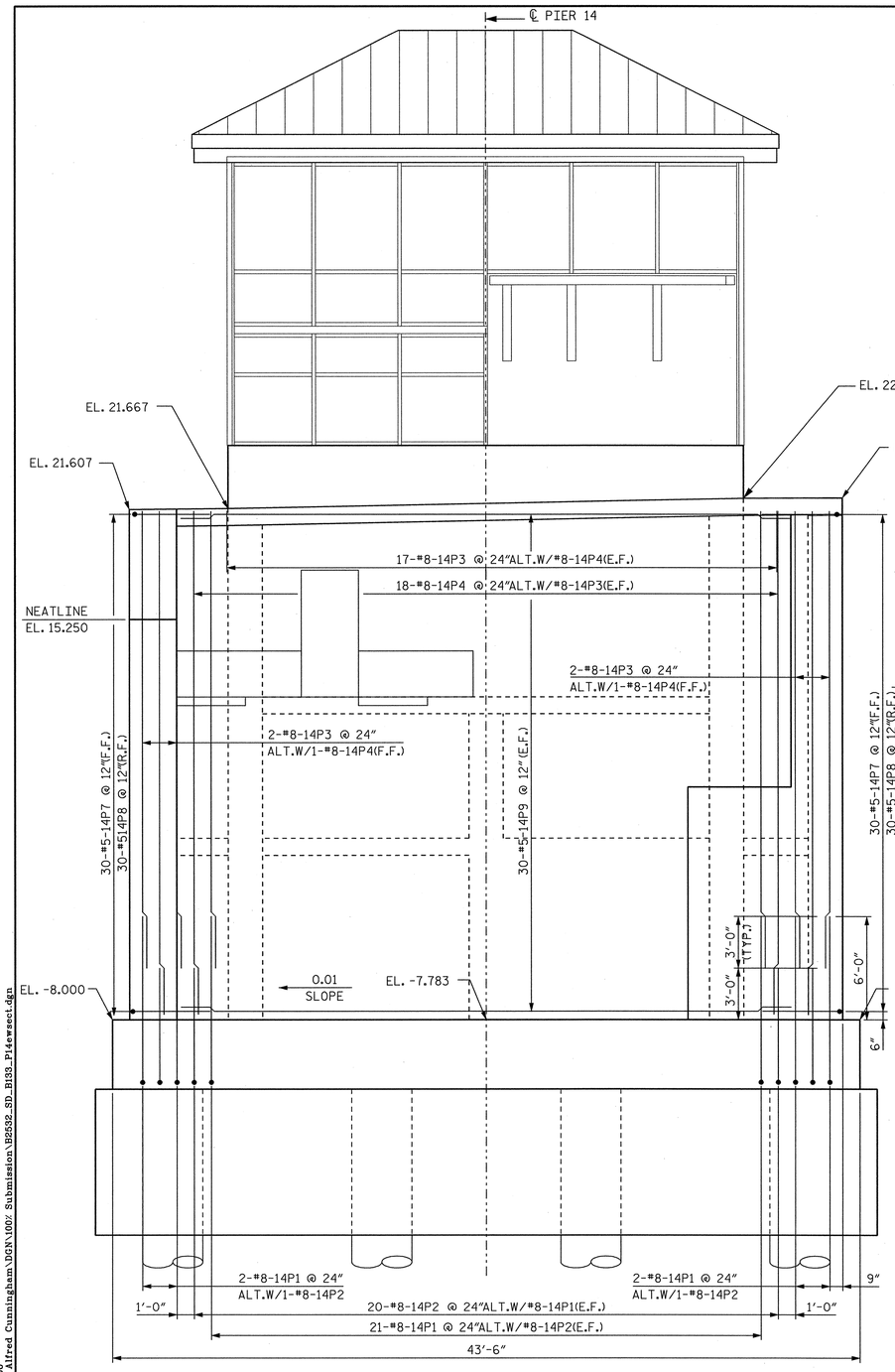

PIER 14 SECTION - (LOOKING EAST)

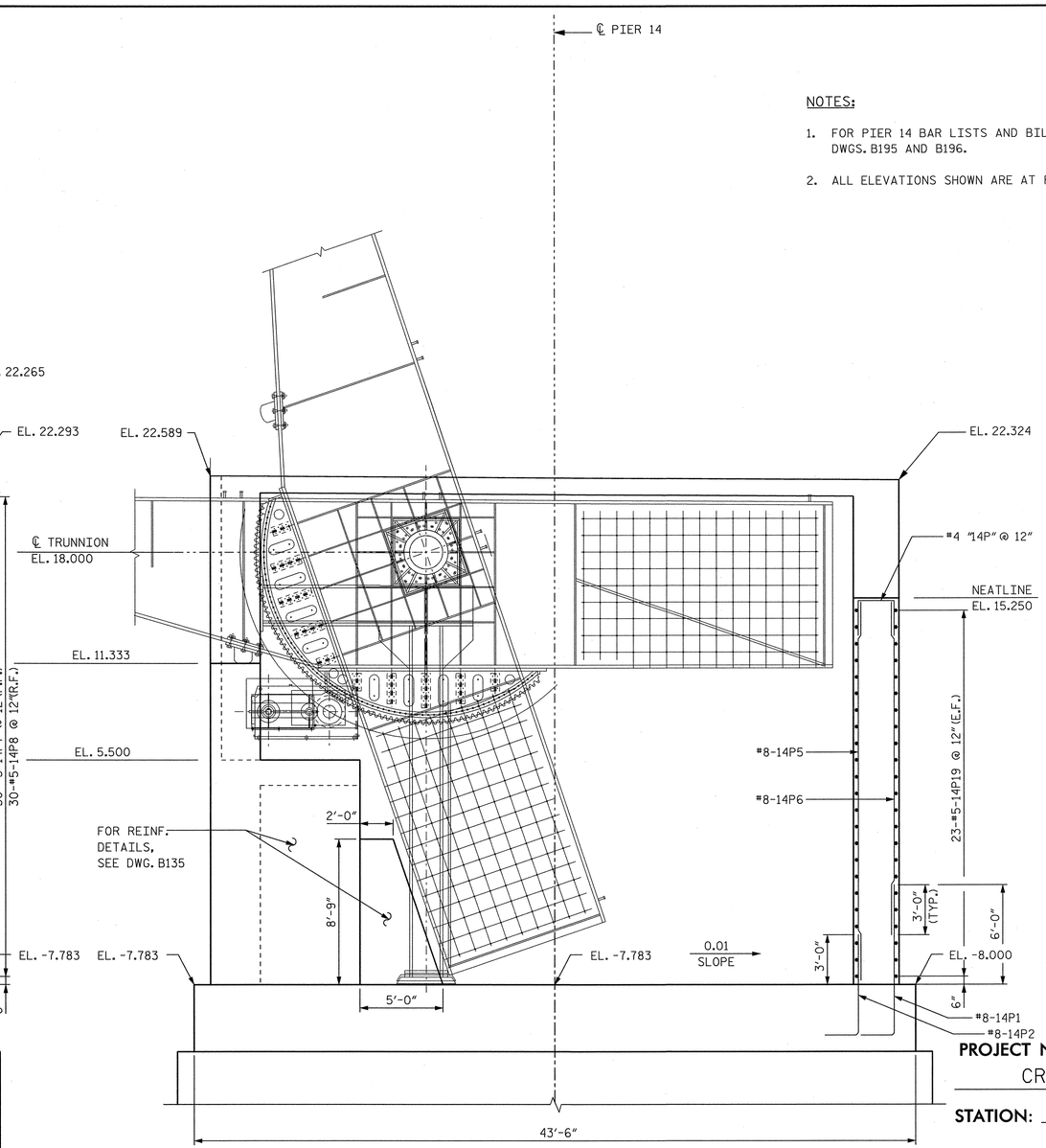

PIER 14 SECTION - (LOOKING WEST)

PROJECT NO. B-2532

CRAVEN **COUNTY**

STATION: 31+21.29 -L-

NORTH CAROLINA PROFESSIONAL SEAL 12916 ENGINEER PAUL J. BARBER 10/10/06

STATE OF NORTH CAROLINA
DEPARTMENT OF TRANSPORTATION
RALEIGH, NC

NORTH BASCULE PIER 14
TRANSVERSE SECTIONS
(LOOKING EAST AND WEST)

HNTB NORTH CAROLINA, P.C.
343 E. Six Forks Rd., Suite 200, Raleigh, N.C. 27609

DRAWN BY SPL DATE 10/06
CHECKED BY SL DATE 10/06

DWG. NO. **B133**

REVISIONS						
NO.	BY	DATE	NO.	BY	DATE	
1			3			
2			4			

SHEET NO. S-154

TOTAL SHEETS 348

slam
18:07:09 2006 AT NYODI11
j:\cadd\428973 - Alfred Cunningham\DGN\100/ Submission\B2532_SD_B133_P14ewsect.dgn

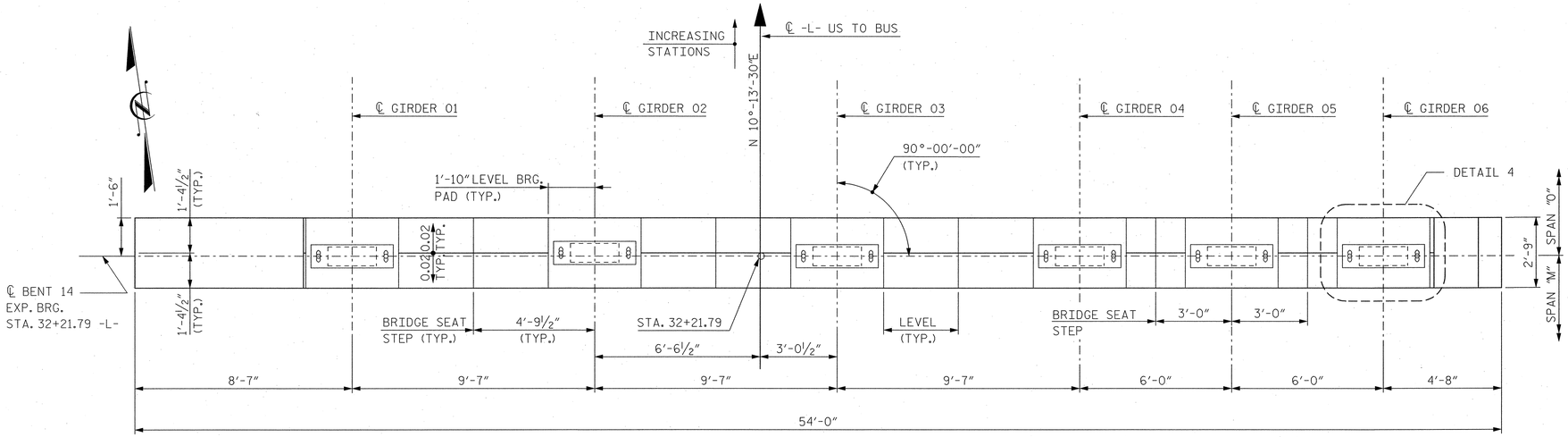

PARTIAL PLAN

AT BENT 14 BEARING SEAT

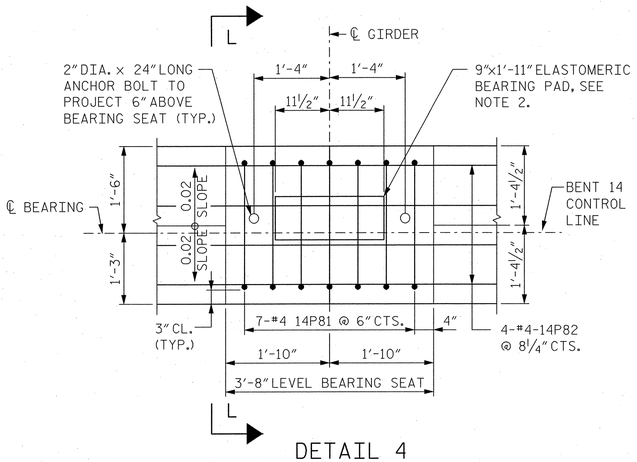

DETAIL 4

TYP. AT EACH GIRDER

NOTES: (CONTINUED)

4. THE "NEAT LINE" IS A CONSTRUCTION JOINT TO PERMIT PROPOER POURING OF THE BRIDGE SEATS.

5. THE TOP SURFACE AREA OF THE BEARING WALL SHALL BE CURED IN ACCORDANCE WITH THE STANDARD SPECIFICATIONS EXCEPT THE MEMBRANE CURING COMPOUND METHOD SHALL NOT BE USED.

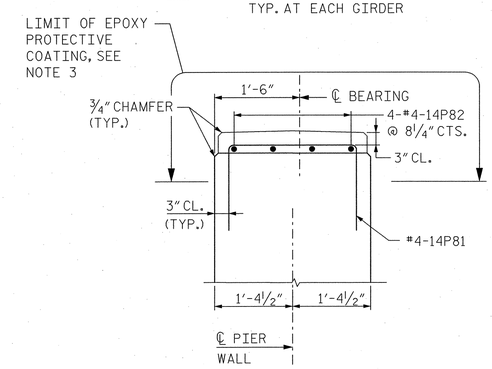

SECTION L-L

NOTES:

1. FOR PIER 14 BAR LIST AND BILL OF MATERIALS, SEE DWGS. B195 AND B196.

2. FOR PRESTRESSED CONCRETE GIRDER AND ELASTOMERIC DETAILS, SEE APPROACH SPAN DRAWINGS.

3. FOR EPOXY PROTECTIVE COATING, SEE SPECIAL PROVISIONS.

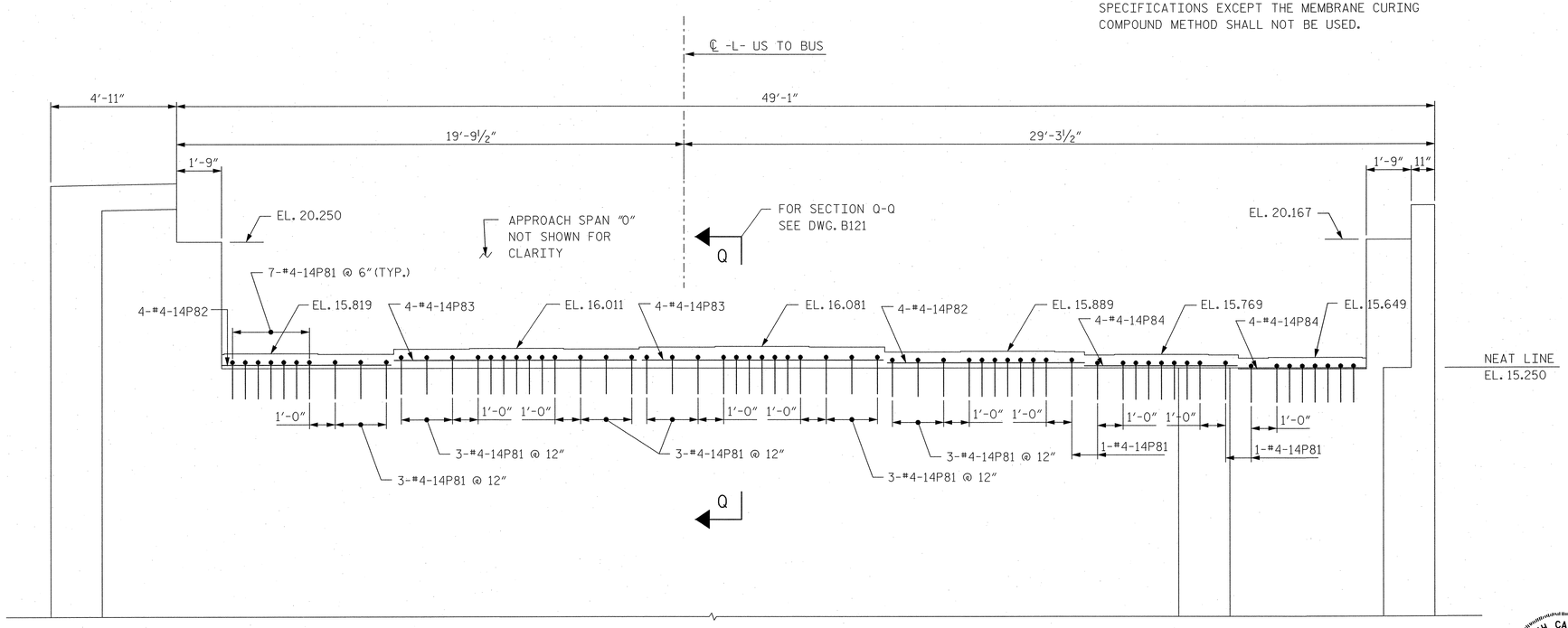

PARTIAL ELEVATION

LOOKING NORTH

PROJECT NO. B-2532

CRAVEN COUNTY

STATION: 31+21.29 -L-

STATE OF NORTH CAROLINA
DEPARTMENT OF TRANSPORTATION
RALEIGH, NC

NORTH BASCULE PIER 14
BENT 14 BEARING
PLAN AND DETAILS

NORTH CAROLINA PROFESSIONAL SEAL 12916 ENGINEER PAUL J. BARGER 10/24/06

HNTB NORTH CAROLINA, P.C.
343 E. Six Forks Rd., Suite 200, Raleigh, N.C. 27609

DRAWN BY PE DATE 10/06
CHECKED BY SL DATE 10/06

DWG. NO. B134

REVISIONS						
NO.	BY	DATE	NO.	BY	DATE	
1			3			
2			4			

SHEET NO. S-155

TOTAL SHEETS 248

sltp_AT_W0290
19-OCT-2006 08:17
J:\cad\42673 - Alfred Cunningham\DGN\B2532_SD_B134_P14sppbrgd.pn

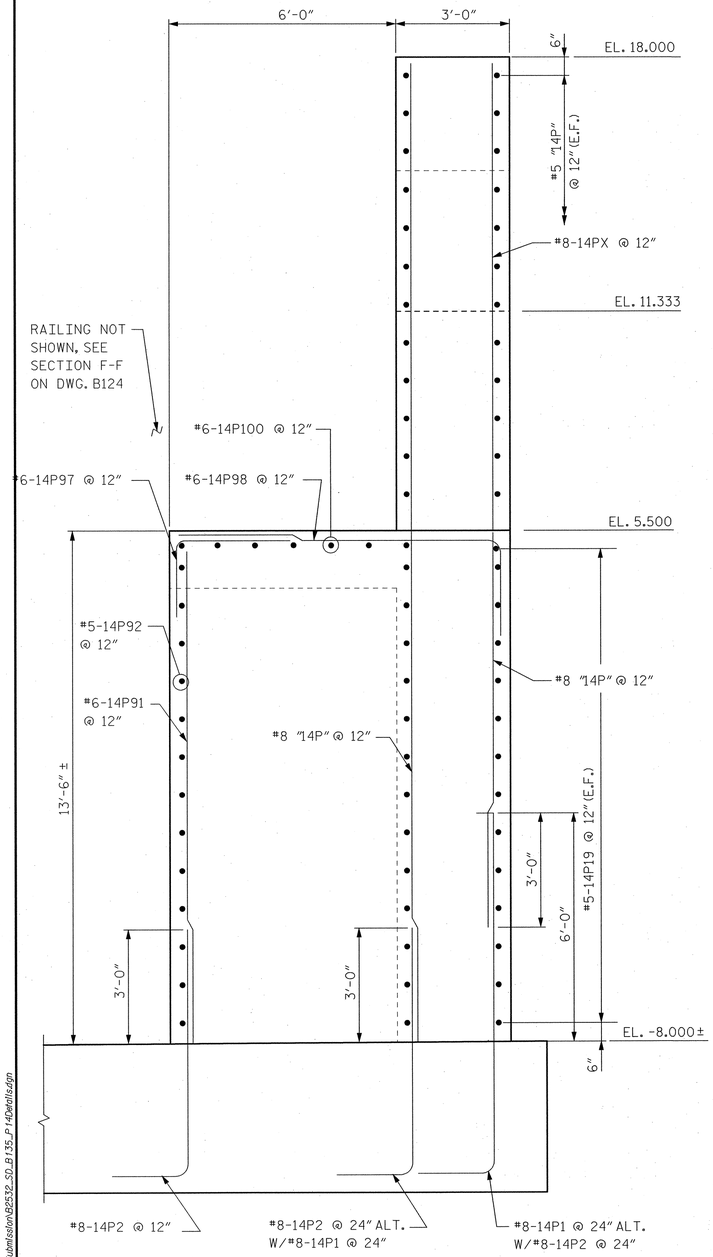

SECTION M-M

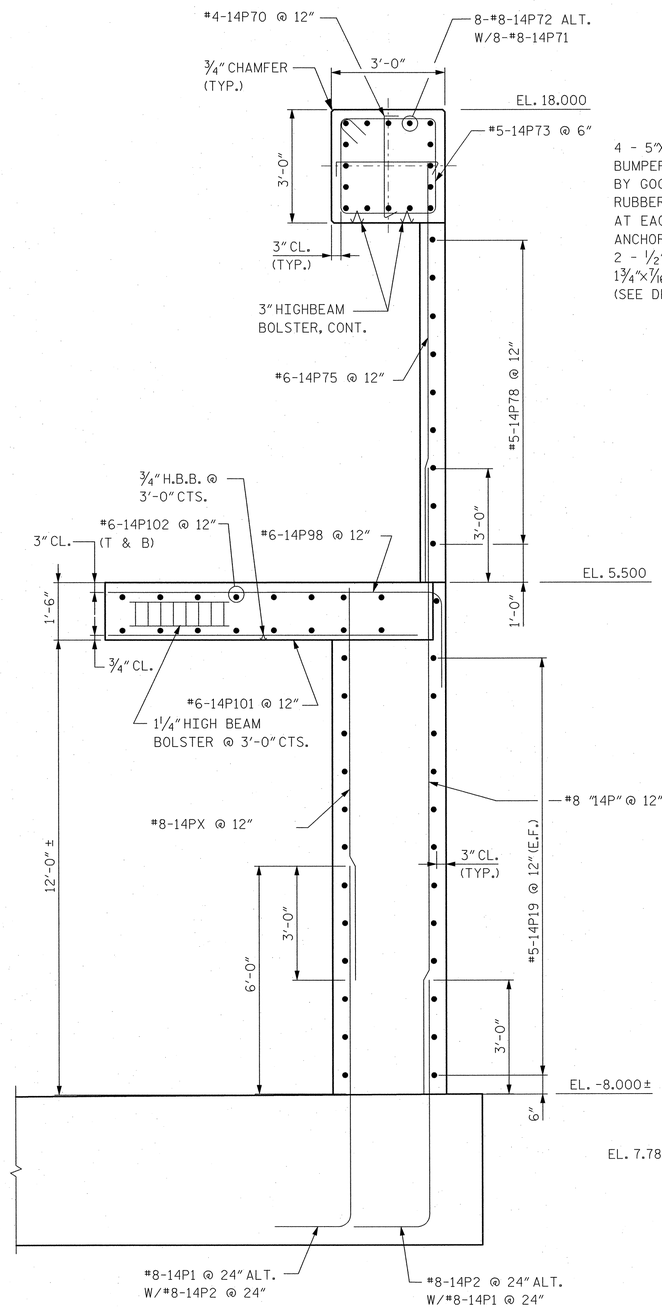

SECTION N-N

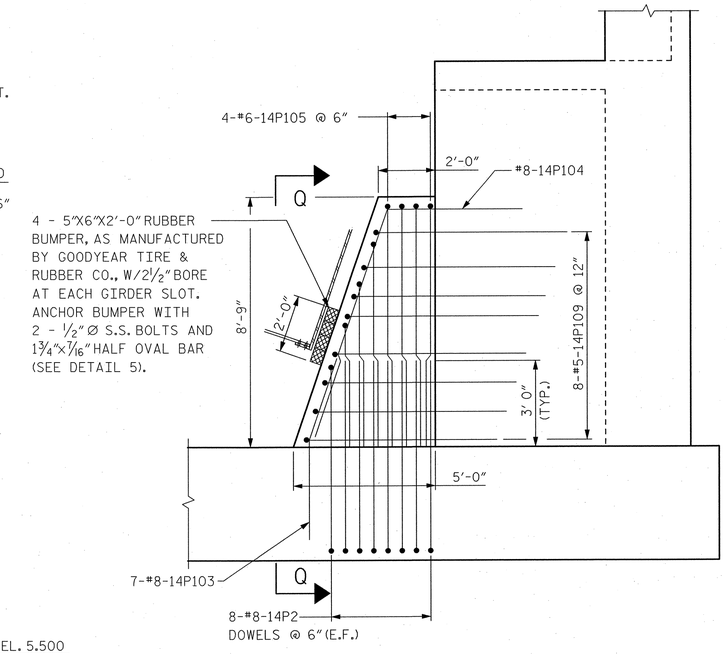

SECTION P-P

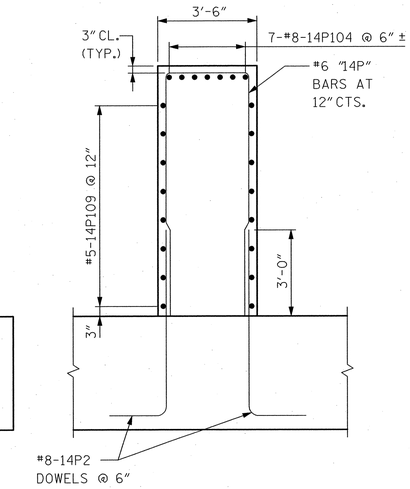

SECTION Q-Q

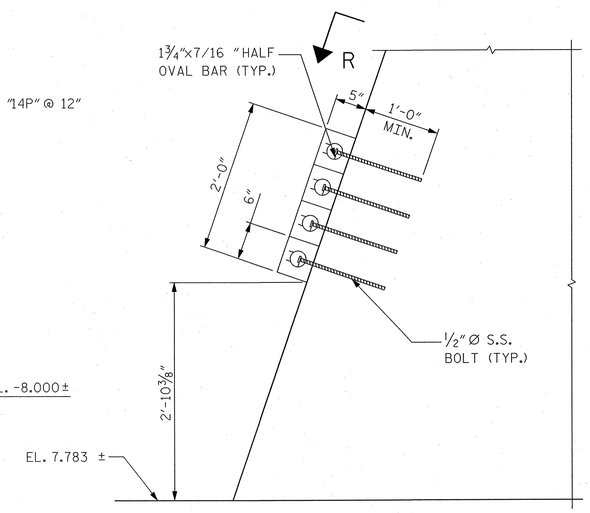

DETAIL 5

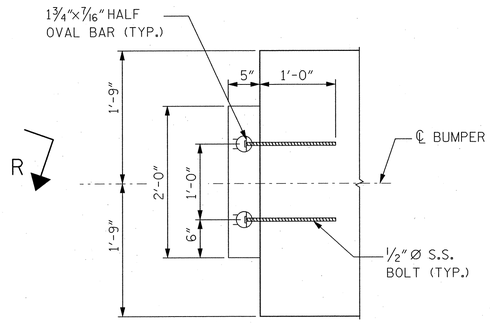

SECTION R-R

PROJECT NO. B-2532

CRAVEN **COUNTY**

STATION: 31+21.29 -L-

NOTES:

1. FOR LOCATION OF SECTIONS M-M AND N-N, SEE DWG. B125.
2. FOR LOCATION OF SECTION P-P, SEE DWG. B123.

NORTH CAROLINA PROFESSIONAL ENGINEER SEAL 12916 PAUL J. BARBER 10/19/06

STATE OF NORTH CAROLINA
DEPARTMENT OF TRANSPORTATION
RALEIGH, NC

NORTH BASCULE PIER 14
SECTIONS AND DETAILS

HNTB NORTH CAROLINA, P.C.
343 E. Six Forks Rd., Suite 200, Raleigh, N.C. 27609

DRAWN BY SPL DATE 10/06
CHECKED BY SL DATE 10/06

DWG. NO. **B135**

REVISIONS						SHEET NO.
NO.	BY	DATE	NO.	BY	DATE	S-156
1			3			TOTAL SHEETS
2			4			348

Iselle - AT W10D72
10/20/2006 14:46
U:\2006\42873_Alfred Cunningham\DGN\100%_Submission\B2532_SD_B135_P14Detail.dgn

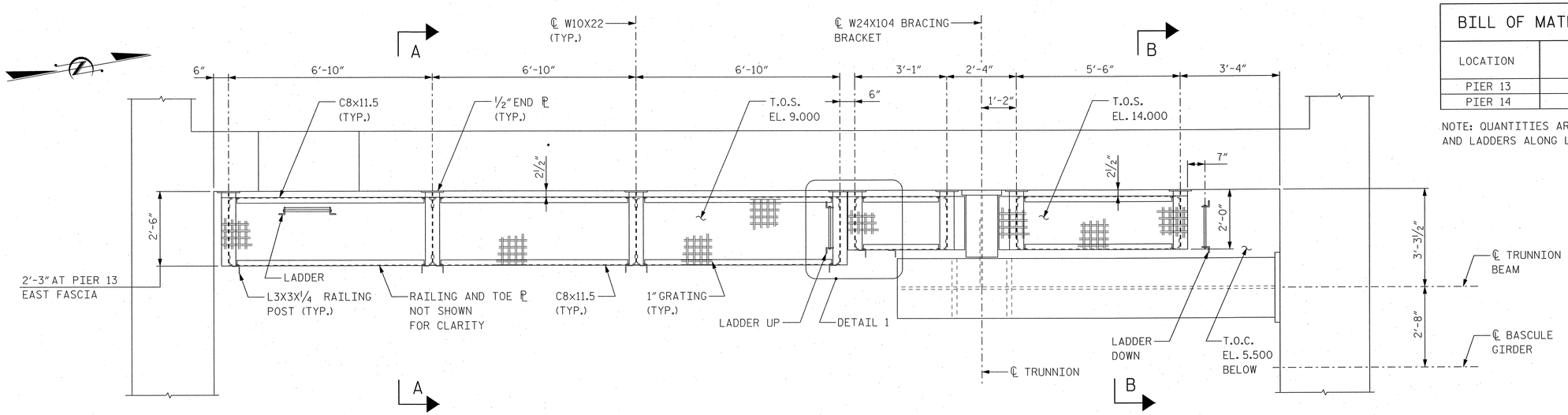

PARTIAL PLAN - PLATFORMS ALONG PIER WALL

(PIER 13 WEST FASCIA SHOWN, SIMILAR AT PIER 13 EAST FASCIA AND PIER 14 EAST AND WEST FASCIA)

BILL OF MATERIALS - PIER ACCESS	
LOCATION	PIER ACCESS (APPROX. STEEL WEIGHT) (LBS)
PIER 13	6,159
PIER 14	6,218

NOTE: QUANTITIES ARE FOR PIER ACCESS WALKWAYS AND LADDERS ALONG LENGTH OF PIER WALL ONLY.

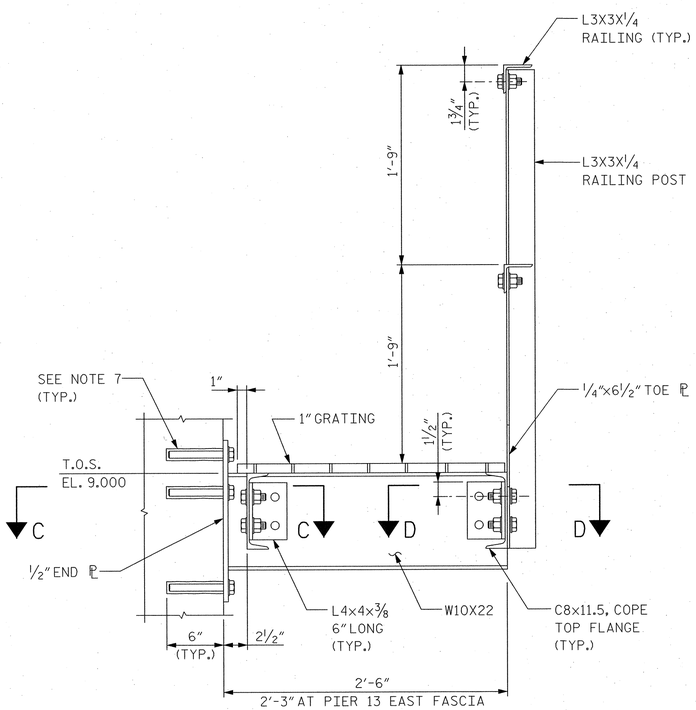

SECTION A-A

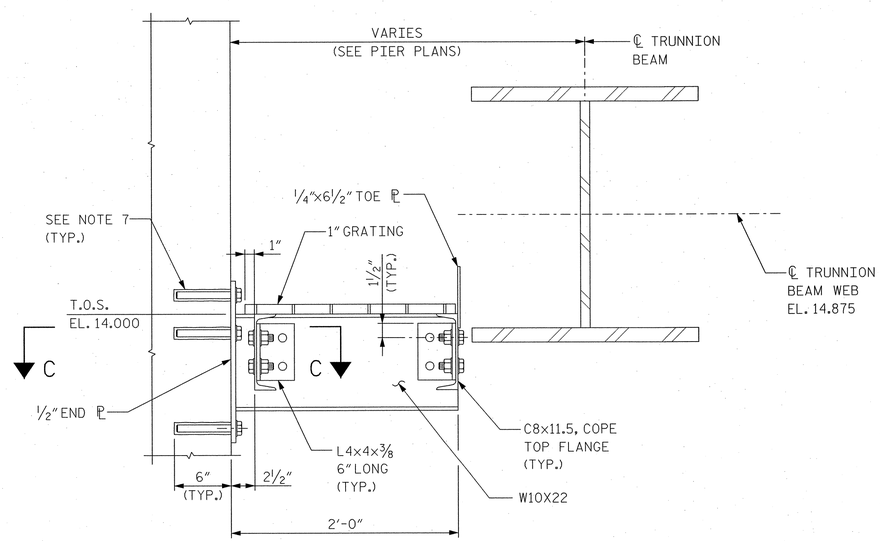

SECTION B-B

NOTES:

1. ALL PLATFORM STRUCTURAL STEEL SHALL BE AASHTO M 270 (ASTM A 709), GRADE 50 AND GALVANIZED.
2. ALL GALVANIZED STRUCTRAL STEEL SHALL CONFORM TO AASHTO M 111 (ASTM A 123).
3. ALL PLATFORM BOLTS SHALL BE 3/4" DIA. AASHTO M 164 (ASTM A 325) UNLESS NOTED OTHERWISE.
4. ALL HIGH STRENGTH BOLTS SHALL BE HOT DIP GALVANIZED CONFORMING TO ASTM A 153.
5. PLATFORM GRATING SHALL BE WELDED STEEL GRID GRATING TYPE W/B WITH 1" x 1/4" BEARING BAR SIZE AT 1 3/16" CENTERS WITH CROSS BARS AT 4" CENTERS.
6. GRATING SHALL BE GALVANIZED PER ASTM A 123.
7. CORE DRILL 7/8" DIA. X 6" DEEP HOLE FOR 3/4" DIA. ANCHOR BOLT AND EPOXY PER ADHESIVE ANCHOR SPECIFICATIONS.
8. FOR SECTION C-C, SECTION D-D AND DETAIL 1, SEE DWG. B137.

LEGEND:

T.O.C. INDICATES TOP OF CONCRETE

T.O.S. INDICATES TOP OF STEEL

PROJECT NO. B-2532

CRAVEN COUNTY

STATION: 31+21.29 -L-

NORTH CAROLINA PROFESSIONAL SEAL 12916 ENGINEER PAUL J. BARBER 10/3/06

STATE OF NORTH CAROLINA
DEPARTMENT OF TRANSPORTATION
RALEIGH, NC

BASCULE PIER MAINTENANCE WALKWAYS AND LADDERS - 1

HNTB NORTH CAROLINA, P.C.
343 E. Six Forks Rd., Suite 200, Raleigh, N.C. 27609

DRAWN BY DS DATE 10/06
CHECKED BY GT DATE 10/06

DWG. NO. B136

REVISIONS						SHEET NO.
NO.	BY	DATE	NO.	BY	DATE	S-157
1			3			TOTAL SHEETS
2			4			348

jella AT W10072
02-OCT-2006 14:20
J:\bsdm\B2513 - Alfred Cunningham\DGN\100% Submission\B2532_SD_B136_P13WalkwaysPier.dgn

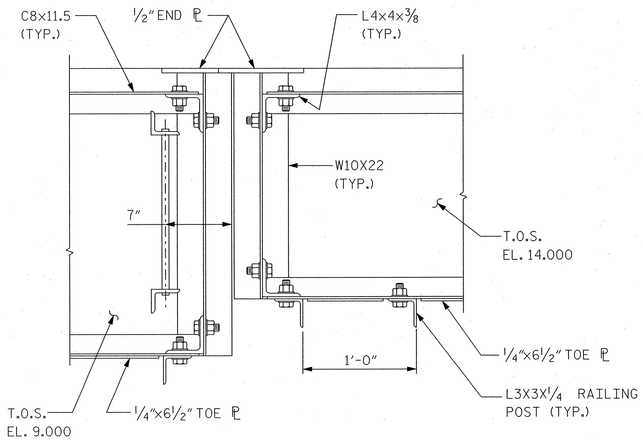

DETAIL 1

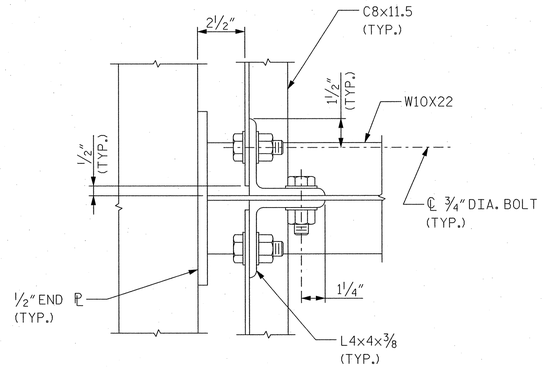

SECTION C-C

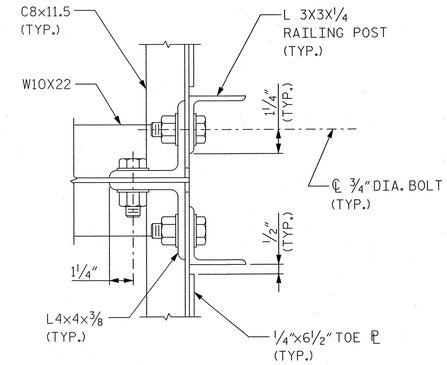

SECTION D-D

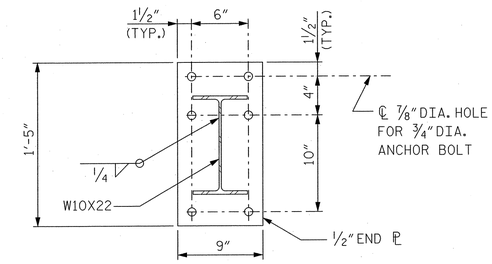

END PLATE DETAIL

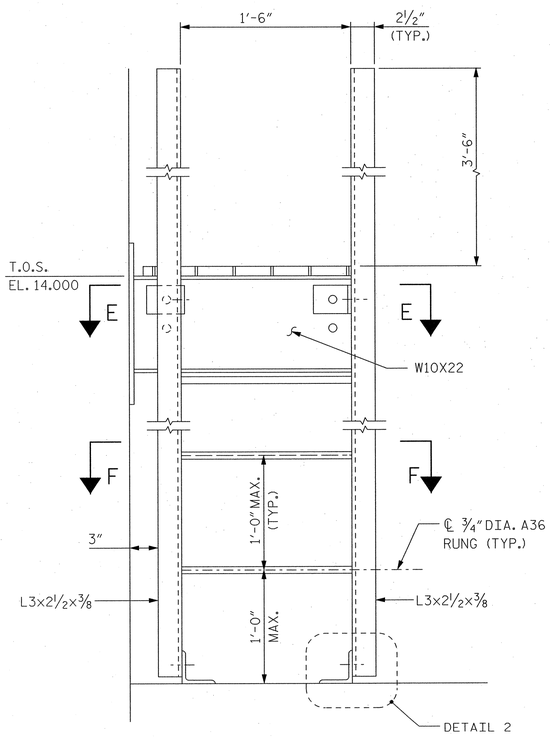

LADDER DETAIL

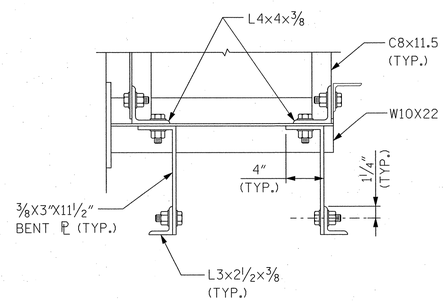

SECTION E-E

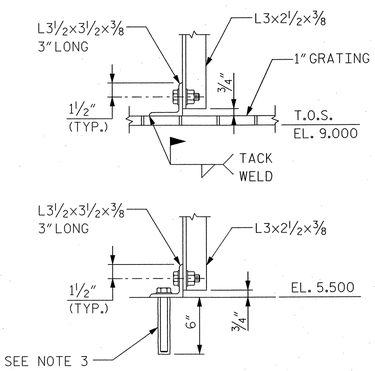

DETAIL 2

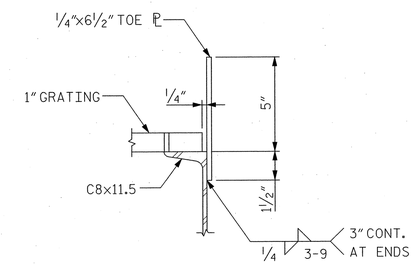

TOE PLATE DETAIL

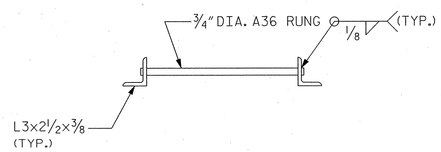

SECTION F-F

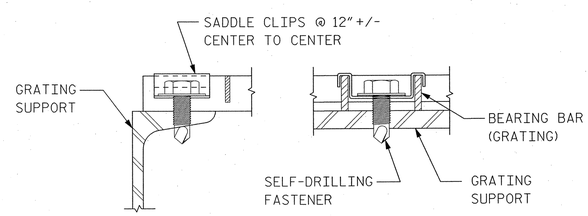

GRATING FASTENER DETAILS

NOTES:

1. FOR LOCATION OF DETAIL 1 AND SECTIONS C-C AND D-D, SEE DWG. B136.
2. FOR GENERAL PLATFORM NOTES, SEE DWG B136.
3. CORE DRILL 7/8" DIA. X 6" DEEP HOLE FOR 3/4" DIA. ANCHOR BOLT AND EPOXY PER ADHESIVE ANCHOR SPECIFICATIONS.

PROJECT NO. B-2532

CRAVEN COUNTY

STATION: 31+21.29 -L-

NORTH CAROLINA PROFESSIONAL ENGINEER SEAL 12916 PAUL J. BARBER 10/9/06

STATE OF NORTH CAROLINA
DEPARTMENT OF TRANSPORTATION
RALEIGH, NC

BASCULE PIER
MAINTENANCE WALKWAYS
AND LADDERS - 2

HNTB NORTH CAROLINA, P.C.
343 E. Six Forks Rd., Suite 200, Raleigh, N.C. 27609

DRAWN BY DS DATE 10/06
CHECKED BY GT DATE 10/06

DWG. NO. B137

REVISIONS						SHEET NO.
NO.	BY	DATE	NO.	BY	DATE	S-158
1			3			TOTAL SHEETS
2			4			348

Jobs AT NYDOT2
02-OCT-2006 15:00
J:\ado\46513 - Alfred Cunningham\DGN\10013_Submission\B2532_S0_B137_PierWalkway.dgn

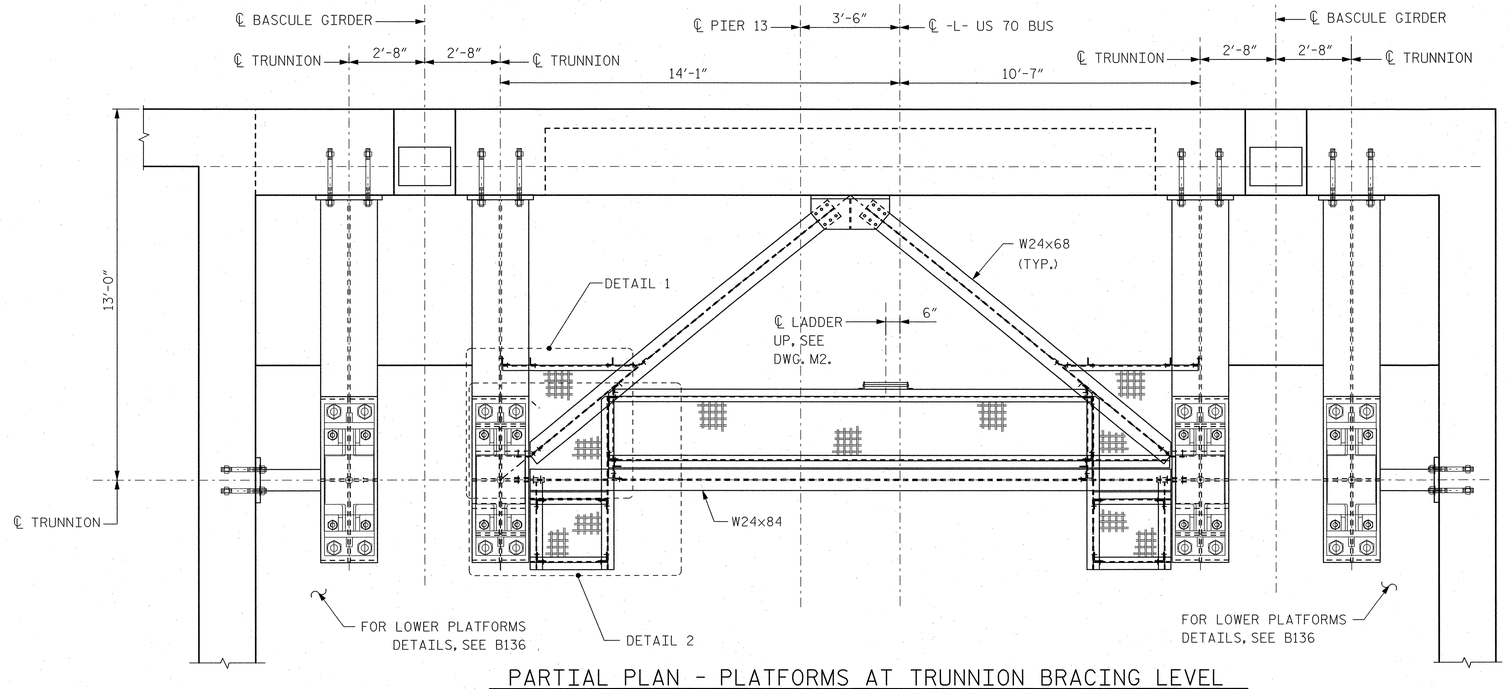

PARTIAL PLAN - PLATFORMS AT TRUNNION BRACING LEVEL

(PIER 13 SHOWN, PIER 14 SIMILAR)

BILL OF MATERIALS - PIER ACCESS	
LOCATION	PIER ACCESS (APPROX. STEEL WEIGHT) (LBS)
PIER 13	3,227
PIER 14	3,227

NOTE: QUANTITIES ARE FOR PIER ACCESS WALKWAYS AND LADDERS SUPPORTED ON TRUNNION BRACING ONLY.

NOTES:

1. ALL PLATFORM STRUCTURAL STEEL SHALL BE AASHTO M 270 (ASTM A 709), GRADE 50 AND GALVANIZED.
2. ALL GALVANIZED STRUCTURAL STEEL SHALL CONFORM TO AASHTO M 111 (ASTM A 123).
3. ALL PLATFORM BOLTS SHALL BE ¾" DIA. AASHTO M 164 (ASTM A 325) UNLESS NOTED OTHERWISE.
4. ALL HIGH STRENGTH BOLTS SHALL BE HOT DIP GALVANIZED CONFORMING TO ASTM A 153.
5. PLATFORM GRATING SHALL BE WELDED STEEL GRID GRATING TYPE W/B WITH 1"x¼" BEARING BAR SIZE AT 1 3/16" CENTERS WITH CROSS BARS AT 4" CENTERS.
6. STEEL GRATING SHALL BE GALVANIZED PER ASTM A 123.
7. FOR SECTIONS A-A, B-B AND C-C, SEE DWG. B139.

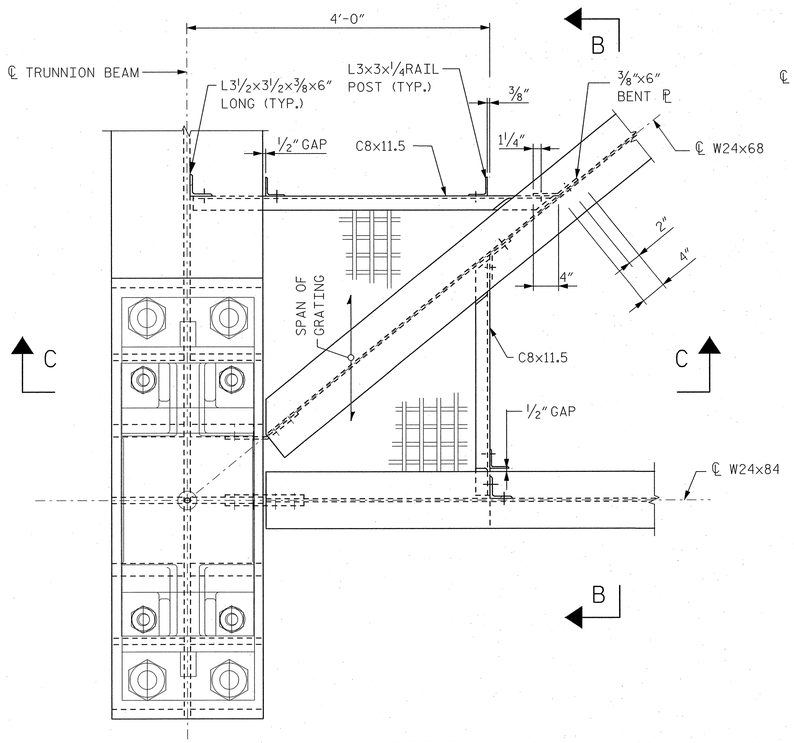

DETAIL 1

AT UPPER PLATFORM

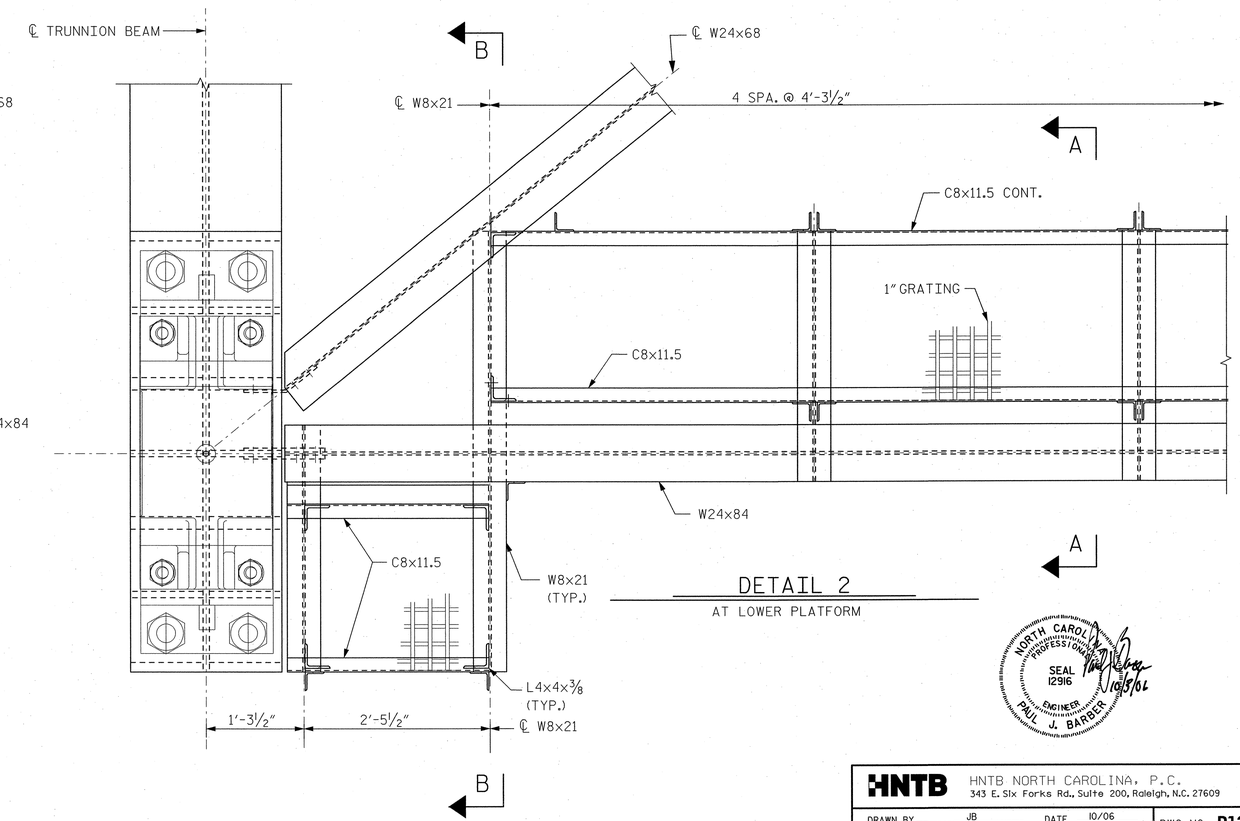

DETAIL 2

AT LOWER PLATFORM

PROJECT NO. B-2532

CRAVEN COUNTY

STATION: 31+21.29 -L-

STATE OF NORTH CAROLINA
DEPARTMENT OF TRANSPORTATION
RALEIGH, NC

BASCULE PIER
MAINTENANCE WALKWAYS
AND LADDERS - 3

NORTH CAROLINA PROFESSIONAL SEAL 12916 ENGINEER PAUL J. BARBER 10/8/06

HNTB NORTH CAROLINA, P.C.
343 E. Six Forks Rd., Suite 200, Raleigh, N.C. 27609

DRAWN BY JB DATE 10/06
CHECKED BY CT DATE 10/06

DWG. NO. B138

REVISIONS						SHEET NO.
NO.	BY	DATE	NO.	BY	DATE	S-159
1			3			TOTAL SHEETS
2			4			348

Jella - AT W10072
02-OCT-2006 14:21
J:\2006\06013_Alfred Cunningham\OSA\1002_Submission\B2532_SD_B138_PierWalkway.dgn

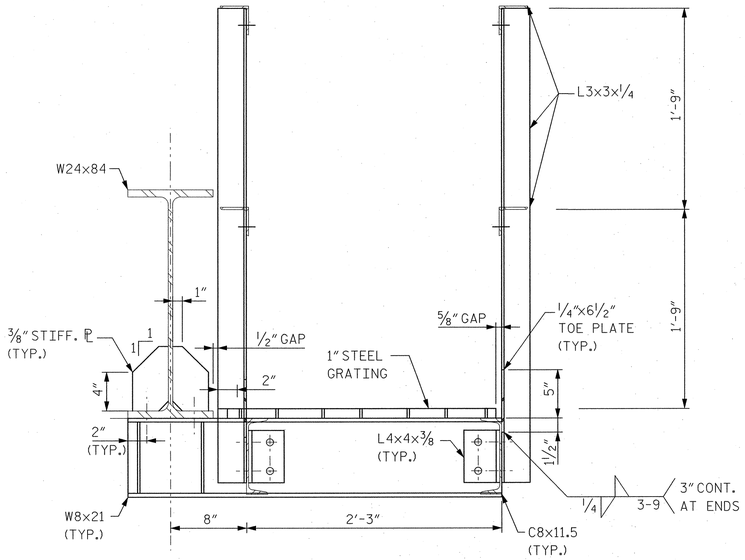

SECTION A-A

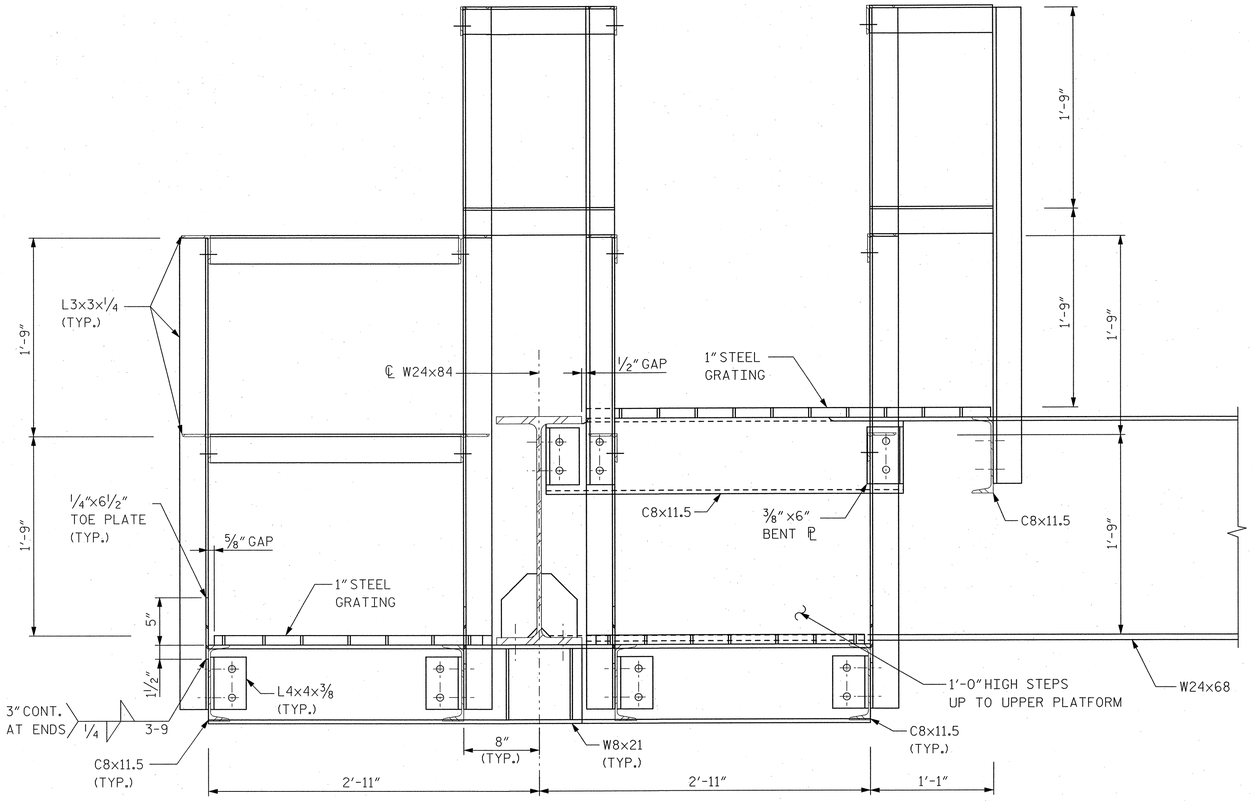

SECTION B-B

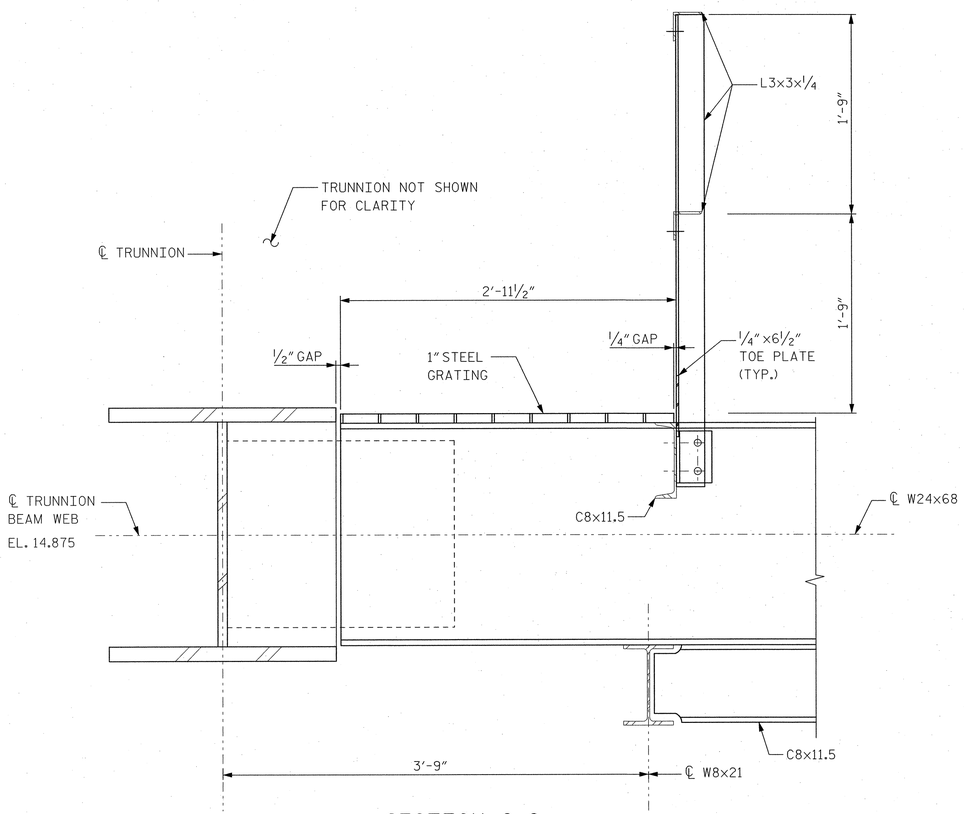

SECTION C-C

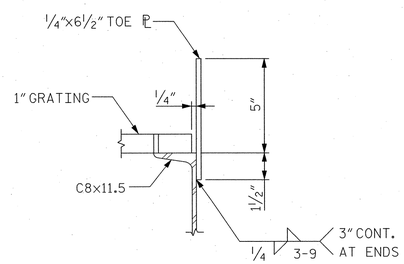

TOE PLATE DETAIL

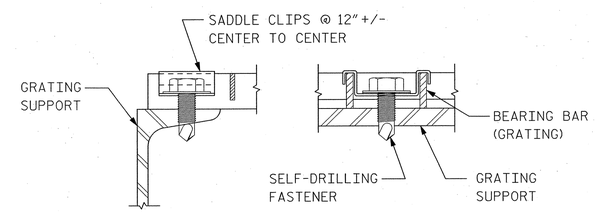

GRATING FASTENER DETAILS

NOTES:

1. FOR GENERAL PLATFORM NOTES, SEE DWG. B138.
2. FOR LOCATION OF SECTIONS A-A, B-B AND C-C, SEE DETAIL 1 AND 2 ON DWG. B138.

PROJECT NO. B-2532

CRAVEN COUNTY

STATION: 31+21.29 -L-

NORTH CAROLINA PROFESSIONAL SEAL 12916 ENGINEER PAUL J. BARBER 10/13/06

STATE OF NORTH CAROLINA
DEPARTMENT OF TRANSPORTATION
RALEIGH, NC

BASCULE PIER
MAINTENANCE WALKWAYS
AND LADDERS - 4

HNTB NORTH CAROLINA, P.C.
343 E. Six Forks Rd., Suite 200, Raleigh, N.C. 27609

DRAWN BY JB DATE 10/06
CHECKED BY GT DATE 10/06

DWG. NO. B139

REVISIONS						SHEET NO.
NO.	BY	DATE	NO.	BY	DATE	S-160
1			3			TOTAL SHEETS
2			4			348

jella AT NYDOT2
02-OCT-2006 14:22
J:\bsc\41267\3 Alfred Cunningham\DGN\100X Submission\B2532_SD_B139_PierWalkways.dgn

A. CONTROL HOUSE/ ELECTRICAL ROOM STRUCTURAL NOTES

1. SHOP DRAWINGS OF ALL FABRICATED ITEMS SHALL BE SUBMITTED FOR REVIEW ACCORDING TO THE SPECIFICATIONS, PRIOR TO FABRICATION. SHOP DRAWINGS FOR ELEMENTS THAT ARE TO BE DESIGNED BY THE CONTRACTOR SHALL BE SEALED BY A REGISTERED PROFESSIONAL ENGINEER LICENSED IN THE STATE OF NORTH CAROLINA. SUBMIT FOR REVIEW SEALED CALCULATIONS FOR ELEMENTS OR SYSTEMS REQUIRING ENGINEERING DESIGN.

2. VERIFY ALL DIMENSIONS AND ELEVATIONS WITH ARCHITECTURAL PLANS. ALL DIMENSIONS AND ASSUMED EXISTING CONDITIONS ARE TO BE VERIFIED IN THE FIELD AND ARE THE RESPONSIBILITY OF THE CONTRACTOR. THE CONTRACTOR SHALL NOTIFY THE ARCHITECT/ENGINEER OF ALL DISCREPANCIES.

3. SEE ARCHITECTURAL PLANS FOR EXACT DIMENSIONS OF OPENINGS IN WALLS, ROOF AND FLOOR SYSTEMS.

4. THE CONTRACTOR SHALL CHECK AND COORDINATE SIZES AND LOCATIONS OF ALL BLOCKOUTS, CONDUIT, PIPE SLEEVES, EMBEDDED ITEMS, ETC. WITH MECHANICAL AND ELECTRICAL CONTRACTORS. NO PIPES, SLEEVES, ETC. SHALL PASS THROUGH BEAMS OR COLUMNS, UNLESS CLEARLY INDICATED ON STRUCTURAL PLANS.

5. DESIGN LOADS

ROOF SNOW LOAD	20 psf
FLOOR LIVE LOADS	
GENERATOR AND ELECTRICAL ROOMS	250 psf
CONTROL ROOM	100 psf
STAIRS	100 psf

WIND LOAD

BASIC WIND SPEED, V = 120 mph
EXPOSURE "D"
IMPORTANCE FACTOR, I= 1.15

SEISMIC CRITERIA

EFFECTIVE PEAK VELOCITY-RELATED ACCELERATION, Av = 0.04
SEISMIC HAZARD EXPOSURE GROUP I
SEISMIC PERFORMANCE CATEGORY A

SEISMIC RESISTING SYSYTEMS:

LOADBEARING REINFORCED CONCRETE SHEAR WALLS
RESPONSE MODIFICATION FACTOR, R = 4.5
DEFLECTION AMPLIFICATION FACTOR, CD = 4

ORDINARY STEEL MOMENT-RESISTING FRAME SUPPORTING ROOF
RESPONSE MODIFICATION FACTOR, R = 4.5
DEFLECTION AMPLIFICATION FACTOR, CD = 4

DEAD LOADS

GENERATOR ROOM	150 psf
ELECTRICAL ROOM	150 psf
CONTROL ROOM	60 psf
ROOF LEVEL	20 psf min

B. STRUCTURAL STEEL

1. ALL STRUCTURAL STEEL SHALL MEET ASTM A572 (GRADE 50), EXCEPT STRUCTURAL TUBING SHALL MEET ASTM A500, GRADE B, FY = 46 KSI, AND STRUCTURAL PIPE SHALL MEET ASTM A501 OR ASTM A53, TYPE E OR S.

2. ALL BOLTED BEAM AND COLUMN CONNECTIONS SHALL BE MADE WITH ASTM A325 BOLTS AND ACCESSORIES, AND ASSUMED TO BE TYPE N, UNLESS OTHERWISE INDICATED.

3. ALL BOLTS SET IN CONCRETE SHALL BE FURNISHED WITH DOUBLE NUTS AND SHALL BE SET WITH A TEMPLATE.

   BOLTS INDICATED AS MACHINE BOLTS (MB) OR ANCHOR BOLTS (AB) SHALL CONFORM TO ASTM A307, UNLESS OTHERWISE NOTED.

   THREADED ROD SHALL BE ASTM F1554, GRADE 36.

4. WELDING SHALL CONFORM TO "STRUCTURAL WELDING CODE", AWS D1.1/D1.1M: 2002. E70XX ELECTRODES SHALL BE USED FOR ALL WELDING.

5. ALL STRUCTURAL STEEL ELEMENTS INCLUDING CONNECTOR ANGLES, BOLTS, NUTS, PLATES, WASHERS, ETC. SHALL BE GALVANIZED PER ASTM A767.

6. METAL FLOOR DECK SHALL BE 2", 20 GAUGE GALVANIZED COMPOSITE DECK
   FLOOR DECK WELDING:
   END LAPS - WELDS PER 36" SHEET
   INTERMEDIATE SUPPORTS - 3 WELDS PER 36" SHEET
   SIDE LAPS - PUDDLE WELD @ 12" OC.
   FLOOR DECK REINFORCING SHALL BE 6X6 W2.9 X W2.9 WELDED WIRE FABRIC.

7. METAL ROOF DECK SHALL BE 1½", WIDE RIBBED TYPE "B", 18 GAUGE GALVANIZED DECK.
   ROOF DECK MINIMUM CONNECTIONS FOR 1½" TYPE "B":
   END LAPS - 4 WELDS PER 36" SHEET
   INTERMEDIATE SUPPORTS - 4 WELDS PER 36" SHEET
   SIDE LAPS -1 - #12 TEK SCREW @ 18" OC
   PARALLED SIDE SUPPORTS - PUDDLE WELDS @ 12" OC

8. ALL PUDDLE (FUSION) WELDS SHALL BE ¾" DIAMETER.

9. MINIMUM ATTACHMENT OF DECK SHALL BE IN ACCORDANCE TO MANUFACTURER'S RECOMMENDATION OR AS INDICATED HEREIN, WHICHEVER IS MORE STRINGENT. DECK SHALL BE A MINIMUM 2-SPAN CONTINUOUS.

C. REINFORCING STEEL

1. ALL MESH REINFORCEMENT SHALL MEET ASTM A185. LAP A MINIMUM OF 6".

2. ALL REINFORCEMENT STEEL SHALL MEET ASTM A615 GRADE 60. ALL CONCRETE REINFORCEMENT SHALL BE EPOXY COATED PER ASTM A775.

D. CAST-IN-PLACE CONCRETE

1. ALL CAST-IN-PLACE CONCRETE SHALL BE NORMAL WEIGHT CONCRETE.

2. CAST-IN-PLACE CONCRETE USED SHALL HAVE THE FOLLOWING MINIMUM COMPRESSIVE STRENGTHS IN 28 DAYS:

STRUCTURAL SLABS	CLASS AA	4500 PSI
CONTROL ROOM LIGHT WEIGHT CONCRETE		4000 PSI
WALLS, COLUMNS, BEAMS	CLASS AA	4500 PSI
ALL OTHERS NOT NOTED	CLASS AA	4500 PSI

3. COARSE AGGREGATE SHALL NOT BE LARGER THAN ¾" NOMINAL SIZE.

4. ALL CONCRETE SHALL BE AIR ENTRAINED TO 6 (1) PERCENT.

5. CONCRETE SLUMP RANGES TO BE AS FOLLOWS:

WALLS, BEAMS, COLUMNS	3" TO 4"
STRUCTURAL SLABS	3" TO 4"

6. CONCRETE SHALL BE IN STRICT CONFORMANCE WITH THE CURRENT "ACI MANUAL OF CONCRETE PRACTICE."

7. NO ALUMINUM ELEMENTS SHALL BE PLACED IN CONCRETE.

8. CHAMFER ALL EXPOSED CONCRETE EDGES ¾". U.N.O. (VERIFY WITH ARCHITECT).

9. SLEEVES, OPENINGS, OR OTHER ATTACHMENTS NOT SHOWN ON DRAWINGS SHALL BE APPROVED BY THE STRUCTURAL ENGINEER PRIOR TO PLACING CONCRETE.

10. WHERE CONSTRUCTION JOINTS ARE INDICATED AT THE INTERFACE OF TWO POURS, THE INTERFACE SHALL BE ROUGHENED TO A FULL AMPLITUDE OF APPROXIMATELY ¼". CONSTRUCTION JOINTS NOT SHOWN AND SHALL BE LOCATED BY THE CONTRACTOR AND APPROVED BY THE ENGINEER, TO LEAST IMPAIR THE STRENGTH OF THE STRUCTURE.

11. WHERE NEW CONCRETE IS DEPOSITED AGAINST CONCRETE THAT IS GREATER THAN 28 DAYS OLD, THOROUGHLY CLEAN EXISTING SURFACE OF LAITANCE AND FOREIGN MATERIAL, AND SATURATE WITH WATER. ALL STANDING WATER SHALL BE REMOVED PRIOR TO PLACEMENT OF NEW CONCRETE, WHERE INDICATED EXISTING SURFACE SHALL BE ROUGHENED TO ¼" AMPLITUDE.

12. CORING OF STRUCTURAL CONCRETE SLABS SHALL BE PERMITTED FOR CORE DIAMETERS OF 4 INCHES OR LESS. ALL SUCH CORING WILL NOT BE PERMITTED UNLESS SPECIFICALLY APPROVED IN ADVANCE BY THE ENGINEER.

13. CLEAR COVER ON REINFORCEMENT SHALL BE AS FOLLOWS, UNLESS OTHERWISE NOTED ON THE DRAWINGS.
    3" CONCRETE EXPOSED TO EARTH OR WEATHER POURED AGAINST FORMS
    1½" BEAMS, COLUMNS AND PILASTERS (TO TIES)
    ¾" SLABS AND WALLS FORMED ABOVE GRADE NOT EXPOSED TO WEATHER.

E. MECHANICAL ANCHORAGES/ ELECTRICAL CONDUITS

1. ELECTRICAL CONDUIT SHALL BE INSTALLED BELOW CONCRETE FLOOR STRUCTURE WHERE POSSIBLE. WHERE CONDUIT MUST BE INSTALLED IN OR WHERE CONDUIT MUST PENETRATE THE CONCRETE STRUCTURE, THE FOLLOWING GUIDELINES MUST BE FOLLOWED:

   A.) CONDUIT LOCATION AND PLACEMENT SHALL BE APPROVED BY THE ENGINEER PRIOR TO PLACING OF CONCRETE.

   B.) USE MAXIMUM ¾" DIA. CONDUIT.

   C.) AT LOCATIONS WHERE CONDUIT ENTERS CONCRETE, USE RIGID CONDUIT.

   D.) WHERE VERTICAL CONDUIT PASSES THROUGH CONCRETE, USE GALVANIZED PIPE SLEEVES ½" LARGER INSIDE DIAMETER THAN THE CONDUIT OUTSIDE DIAMETER EMBEDDED IN THE CONCRETE.

   E.) WHERE CONDUIT INTERFERES W/ HEADED STUDS OR EMBEDDED PLATES. THE CONDUIT SHALL BE MOVED TO CLEAR THE HEADED STUDS BY A MINIMUM OF 6"

   F.) CONDUIT PLACED IN SLABS SHALL BE PLACED IN STRAIGHT LINES (A MINIMUM OF 12" O.C.) AND SHALL CROSS BEAMS PERPENDICULAR TO THEIR SPANS.

   G.) CONDUIT GROUPS RUNNING PARALLELTO BEAMS SHALL BE PLACED A MINIMUM OF 6" FROM THE BEAM SIDES.

   H.) CONDUIT GROUPS (PER NOTE F) RUNNING PERPENDICULAR TO BEAMS SHALL BE PLACED WITHIN THE MIDDLE 1/3 OF THE BEAM SPAN.

2. MECHANICAL ANCHORAGES TO CONCRETE FLOOR STRUCTURE SHALL BE MADE WITH EITHER EMBEDDED OR DRILLED IN ANCHORS. (NO POWDER ACTUATED FASTENERS WILL BE ALLOWED.) ANCHORS DRILLED IN SHALL BE DONE IN THE SIDES OF THE BEAMS ONLY AND SHALL BE LOCATED A MINIMUM OF 6" ABOVE THE BOTTOM OF THE BEAM.

F. MISCELLANEOUS

1. CONTROL HOUSE STRUCTURE SHALL BE ADEQUATELY BRACED FOR WIND AND CONSTRUCTION LOADS UNTIL ALL FLOOR, ROOF AND WALL UNITS HAVE BEEN PERMANENTLY ATTACHED THERETO.

NOTE:

1. FOR LIST OF ABBREVIATIONS, SEE DWG. B100.

PROJECT NO. B-2532
CRAVEN COUNTY
STATION: 31+21.29 -L-

NORTH CAROLINA PROFESSIONAL SEAL 12916 ENGINEER PAUL J. BARBER 12/14/06

STATE OF NORTH CAROLINA
DEPARTMENT OF TRANSPORTATION
RALEIGH, NC

CONTROL HOUSE
GENERAL NOTES

HNTB NORTH CAROLINA, P.C.
343 E. Six Forks Rd., Suite 200, Raleigh, N.C. 27609

DRAWN BY JRE DATE 10/06
CHECKED BY ALB DATE 10/06
DWG. NO. B140

REVISIONS						SHEET NO.
NO.	BY	DATE	NO.	BY	DATE	S-161
1			3			TOTAL SHEETS
2			4			348

slem AT NYDUII
14-Dec-2006 14:50
J:\cadd\42873_Alfred Cunningham\DGN\100% Submission\B2532_SD_B140_CHgennotes.dgn

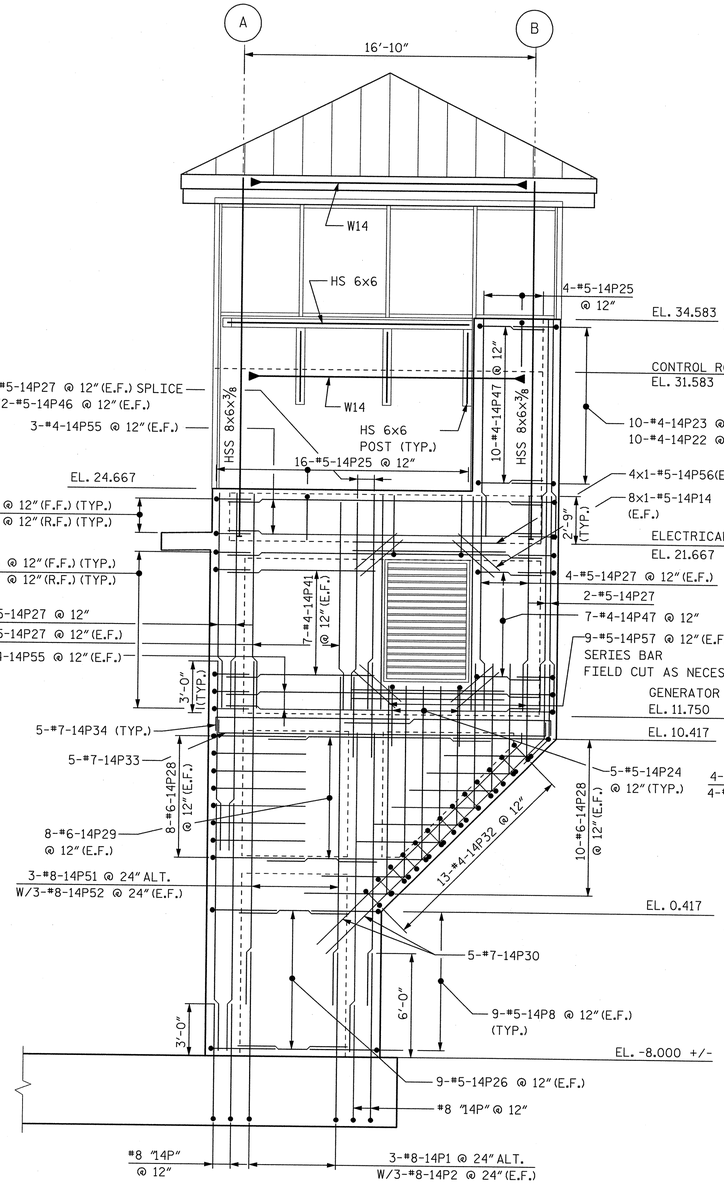

CONTROL HOUSE - SOUTH ELEVATION

(LOOKING NORTH AT FACE OF CONTROL HOUSE)

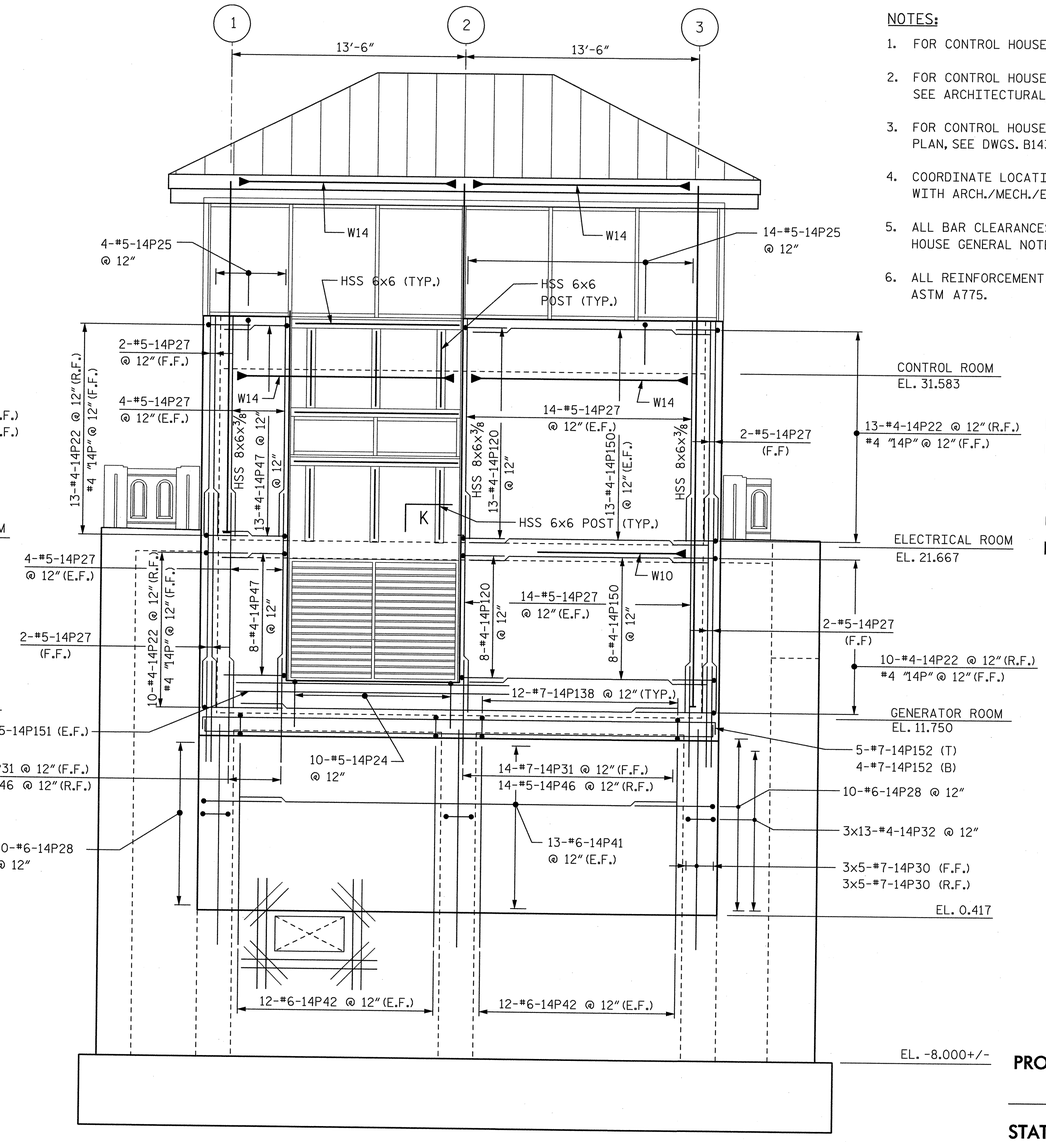

CONTROL HOUSE - EAST ELEVATION

(LOOKING WEST)

NOTES:

1. FOR CONTROL HOUSE GENERAL NOTES, SEE DWG. B140.
2. FOR CONTROL HOUSE DIMENSIONS NOT SHOWN, SEE SEE ARCHITECTURAL DRAWINGS.
3. FOR CONTROL HOUSE STRUCTURAL FLOOR AND ROOF PLAN, SEE DWGS. B143 TO B146.
4. COORDINATE LOCATION AND SIZE OF ALL UTILITY OPENINGS WITH ARCH./MECH./ELECT. DRAWINGS.
5. ALL BAR CLEARANCES SHALL BE AS NOTED ON CONTROL HOUSE GENERAL NOTE D.14 ON DWG. B140.
6. ALL REINFORCEMENT STEEL SHALL BE EPOXY COATED PER ASTM A775.

LEGEND:

F.F.	INDICATES FRONT FACE
R.F.	INDICATES REAR FACE
E.F.	INDICATES EACH FACE
▶	INDICATES MOMENT CONNECTIONS

PROJECT NO. B-2532

CRAVEN COUNTY

STATION: 31+21.29 -L-

STATE OF NORTH CAROLINA
DEPARTMENT OF TRANSPORTATION
RALEIGH, NC

CONTROL HOUSE
SOUTH & EAST ELEVATIONS

NORTH CAROLINA PROFESSIONAL SEAL 12916 ENGINEER PAUL J. BARBER 10/16/06

HNTB NORTH CAROLINA, P.C.
343 E. Six Forks Rd., Suite 200, Raleigh, N.C. 27609

DRAWN BY SL DATE 10/06
CHECKED BY ALB DATE 10/06

DWG. NO. B141

REVISIONS						SHEET NO.
NO.	BY	DATE	NO.	BY	DATE	S-162
1			3			TOTAL SHEETS
2			4			348

slan
USER: AT N70111
DATE: 10/16/2006 1:40:07 PM
J:\cadd\42873 - Alfred Cunningham\DGN\100% Submission\B2532_SD_B141_CHseelevs.dgn

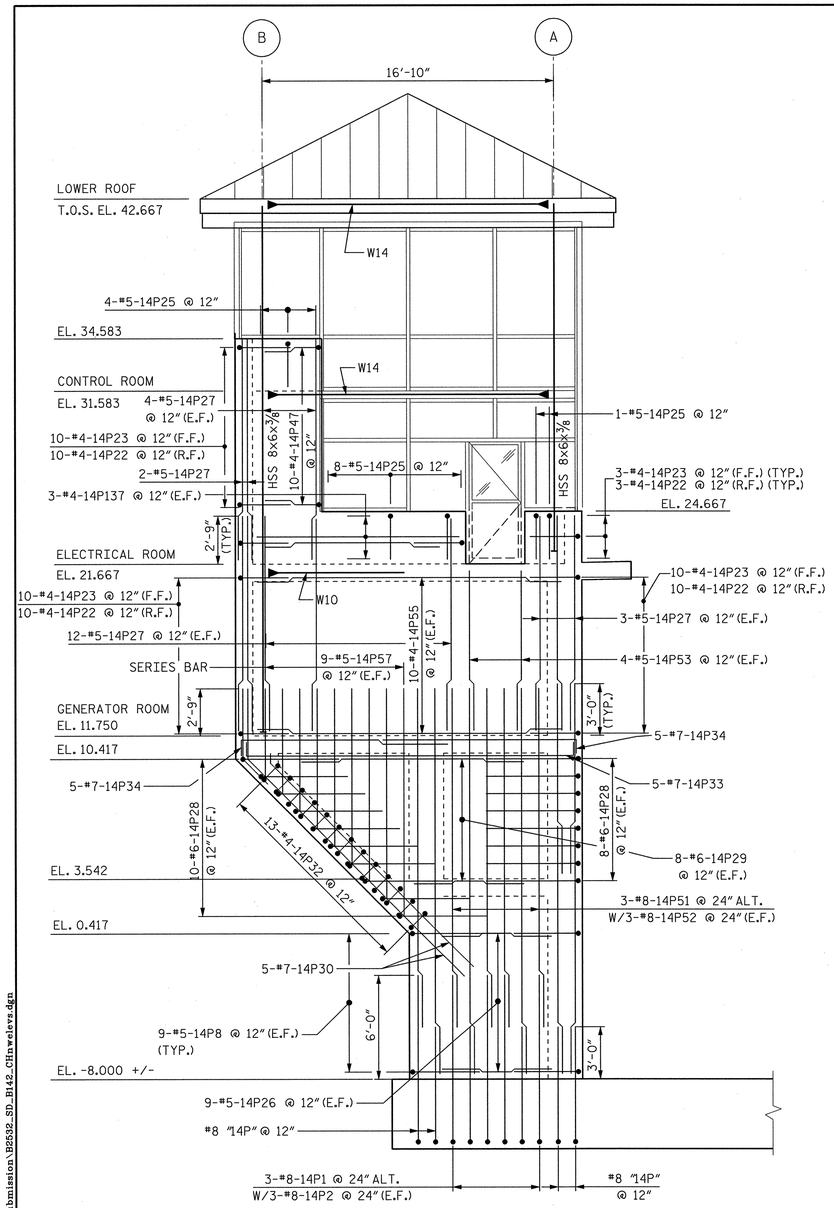

CONTROL HOUSE - NORTH ELEVATION

(LOOKING SOUTH)

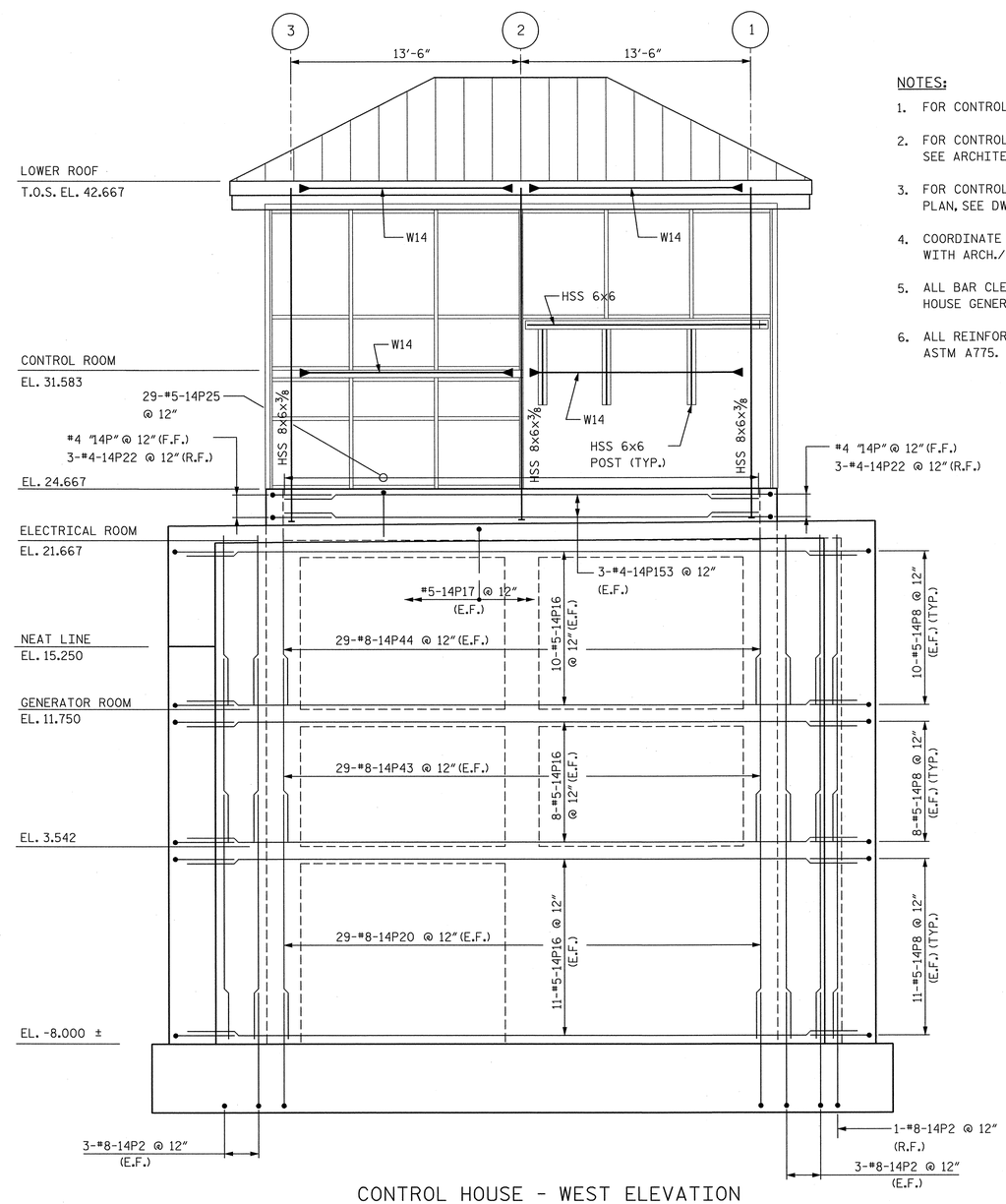

CONTROL HOUSE - WEST ELEVATION

(LOOKING EAST)

NOTES:

1. FOR CONTROL HOUSE GENERAL NOTES, SEE DWG. B140.
2. FOR CONTROL HOUSE DIMENSIONS NOT SHOWN, SEE SEE ARCHITECTURAL DRAWINGS.
3. FOR CONTROL HOUSE STRUCTURAL FLOOR AND ROOF PLAN, SEE DWGS. B143 TO B146.
4. COORDINATE LOCATION AND SIZE OF ALL UTILITY OPENINGS WITH ARCH./MECH./ELECT. DRAWINGS.
5. ALL BAR CLEARANCES SHALL BE AS NOTED ON CONTROL HOUSE GENERAL NOTE D.14.
6. ALL REINFORCEMENT STEEL SHALL BE EPOXY COATED PER ASTM A775.

LEGEND:

F.F.	INDICATES FRONT FACE
R.F.	INDICATES REAR FACE
E.F.	INDICATES EACH FACE
▶—	INDICATES MOMENT CONNECTION

PROJECT NO. B-2532

CRAVEN COUNTY

STATION: 31+21.29 -L-

NORTH CAROLINA PROFESSIONAL SEAL 12916 ENGINEER PAUL J. BARBER 10/16/06

STATE OF NORTH CAROLINA
DEPARTMENT OF TRANSPORTATION
RALEIGH, NC

CONTROL HOUSE
NORTH & WEST ELEVATIONS

HNTB NORTH CAROLINA, P.C.
343 E. Six Forks Rd., Suite 200, Raleigh, N.C. 27609

DRAWN BY SL DATE 10/06
CHECKED BY ALB DATE 10/06

DWG. NO. B142

REVISIONS						SHEET NO.
NO.	BY	DATE	NO.	BY	DATE	S-163
1			3			TOTAL SHEETS
2			4			348

slann AT NYODI11
14-OCT-2006 14:50
J:\cadd\428973_Alfred Cunningham\DGN\002 Submission\B2532_SD_B142_CHnweleva.dgn

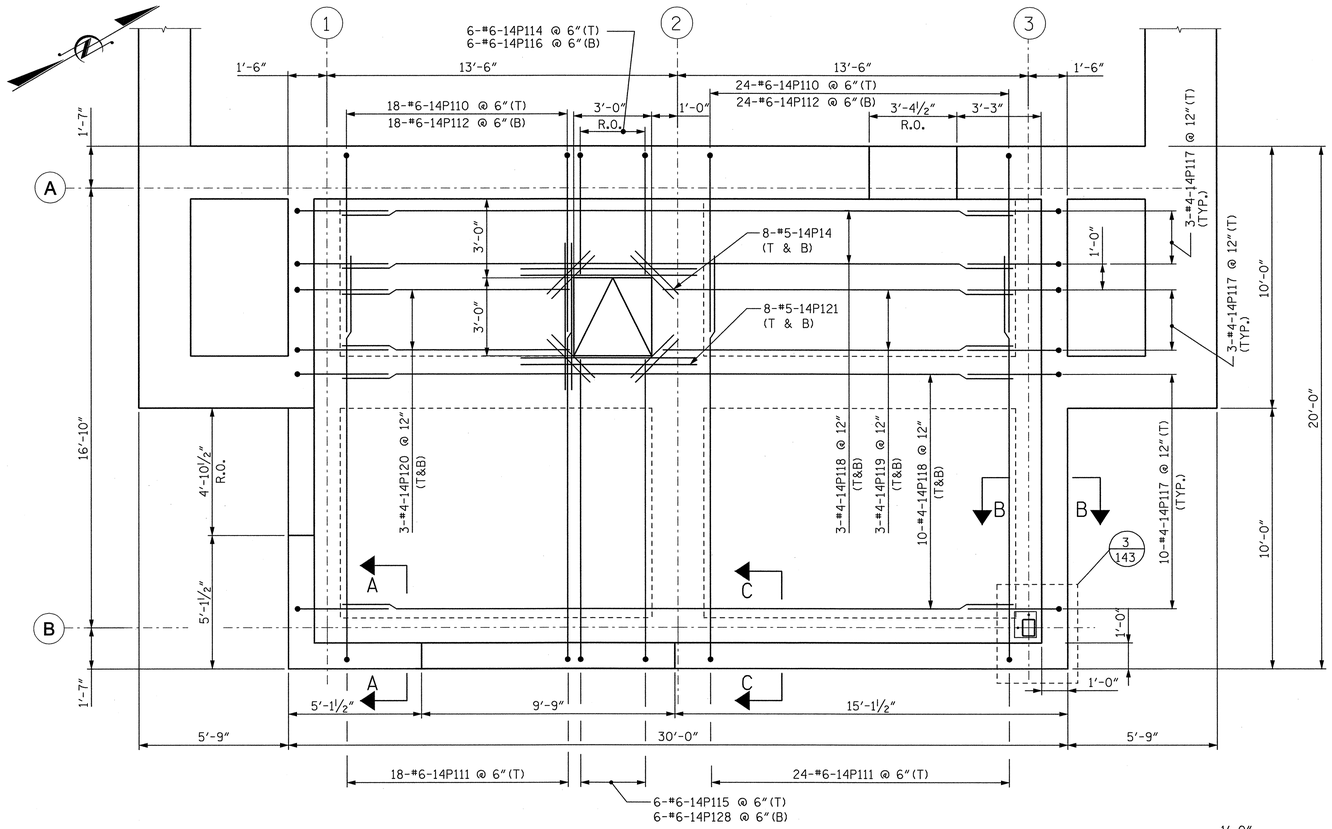

GENERATOR ROOM PLAN AT EL. 11.750

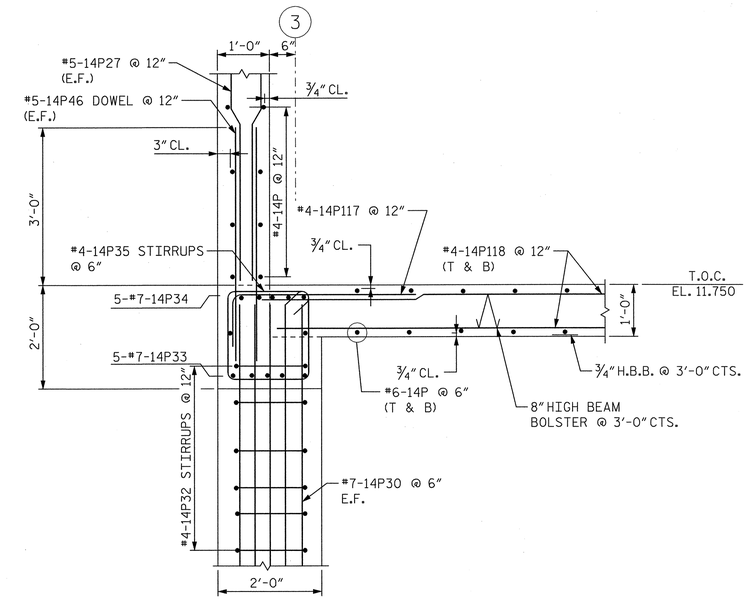

SECTION B-B

NOTES:

1. FOR CONTROL HOUSE ELEVATIONS, SEE DWG NOS. B141 AND B142.
2. FOR CONTROL HOUSE GENERAL NOTES, SEE DWG. NO. B140.
3. TOP OF CONCRETE (T.O.C.) ELEVATION SHALL BE EL. 11.750.
4. ALL REINFORCEMENT BAR CLEARANCES SHALL BE AS NOTED ON DWG. B141 NOTE D.14.
5. ALL REINFORCEMENT STEEL SHALL BE EPOXY COATED PER ASTM A775.

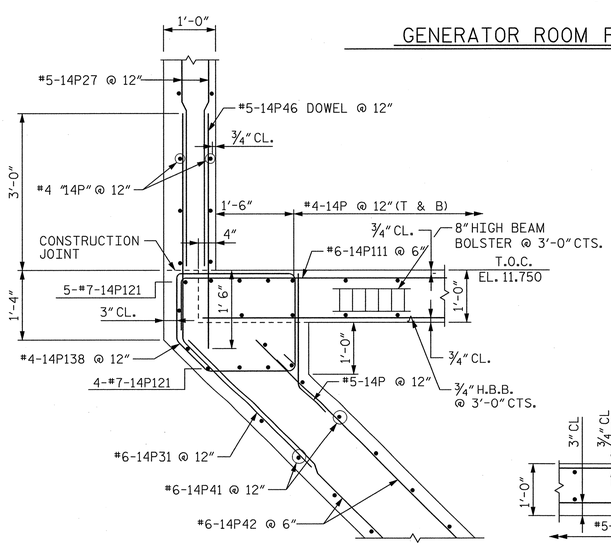

SECTION A-A

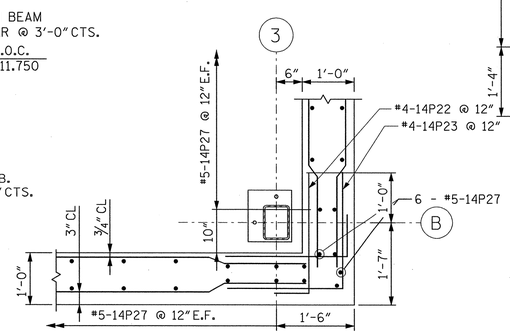

DETAIL 3

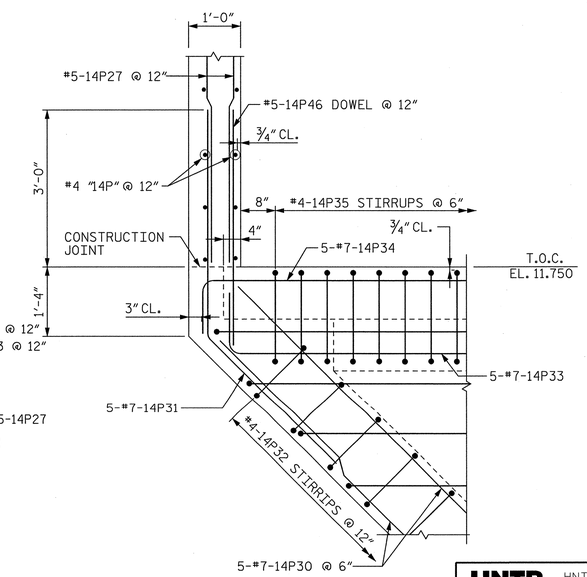

SECTION C-C

PROJECT NO. B-2532

CRAVEN COUNTY

STATION: 31+21.29 -L-

STATE OF NORTH CAROLINA
DEPARTMENT OF TRANSPORTATION
RALEIGH, NC

CONTROL HOUSE
GENERATOR LEVEL
PLAN AND DETAILS

HNTB NORTH CAROLINA, P.C.
343 E. Six Forks Rd., Suite 200, Raleigh, N.C. 27609

DRAWN BY SPL DATE 10/06
CHECKED BY ALB DATE 10/06

DWG. NO. B143

REVISIONS							SHEET NO.
NO.	BY	DATE	NO.	BY	DATE		S-164
1			3				TOTAL SHEETS
2			4				348

NORTH CAROLINA PROFESSIONAL ENGINEER SEAL 12916 PAUL J. BARBER 10/10/06

plan AT NYOD111
18-OCT-2006 14:50
J:\cadd\42673 - Alfred Cunningham\DGN\00/ Submission\B2532_SD_B143_CHgenroom.dgn

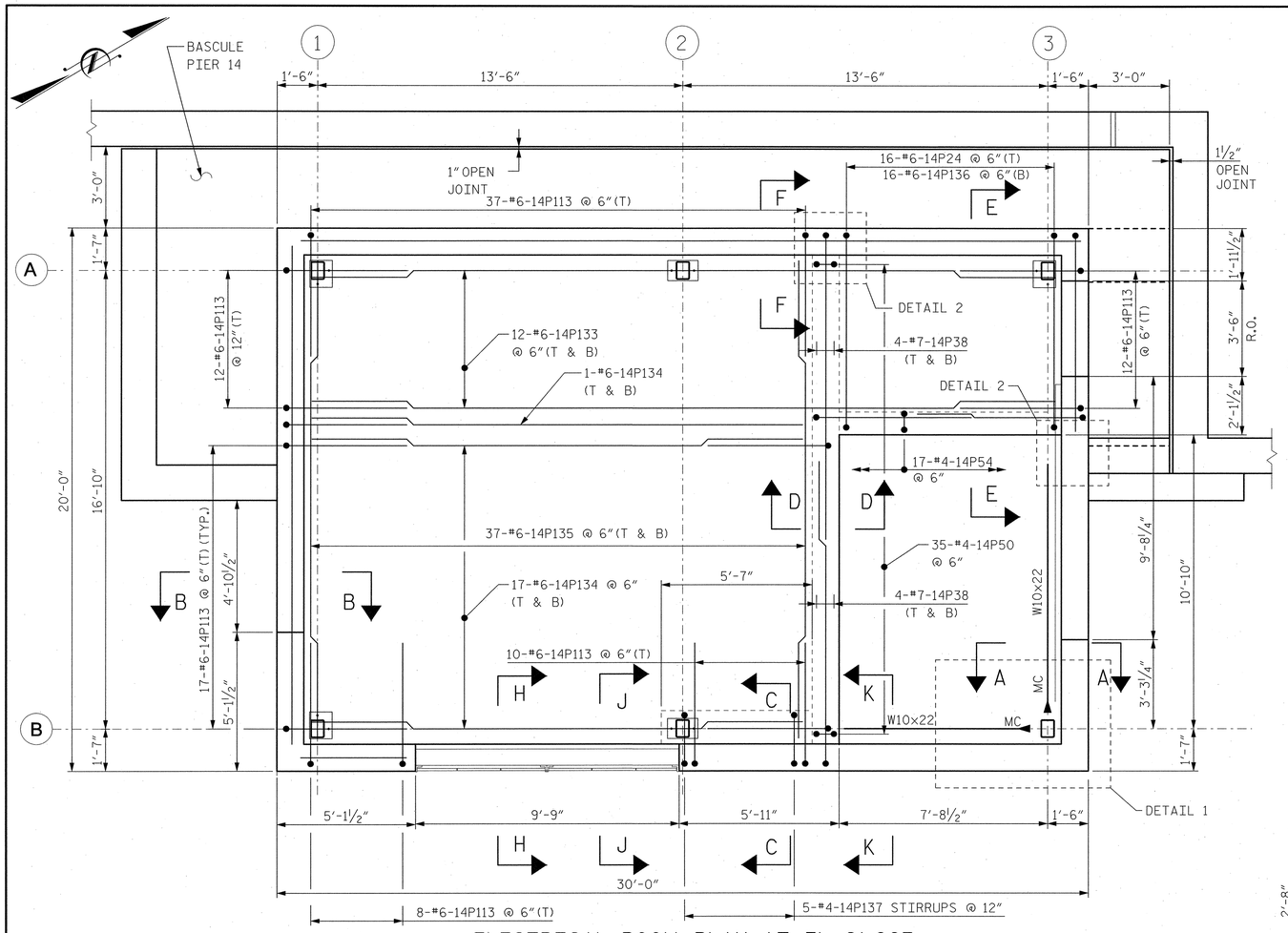

ELECTRICAL ROOM PLAN AT EL. 21.667

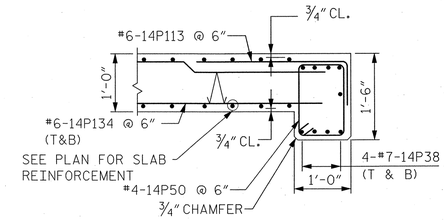

SECTION D-D

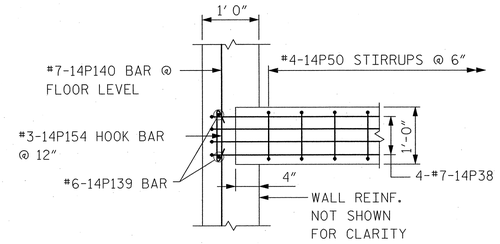

PLAN SECTION G-G

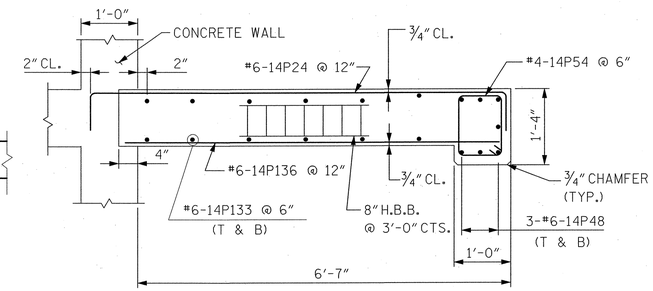

SECTION E-E

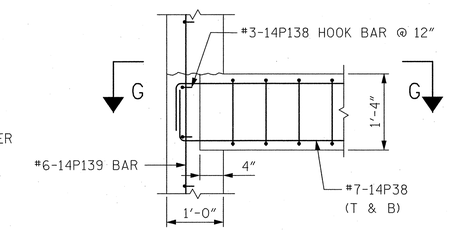

SECTION F- F

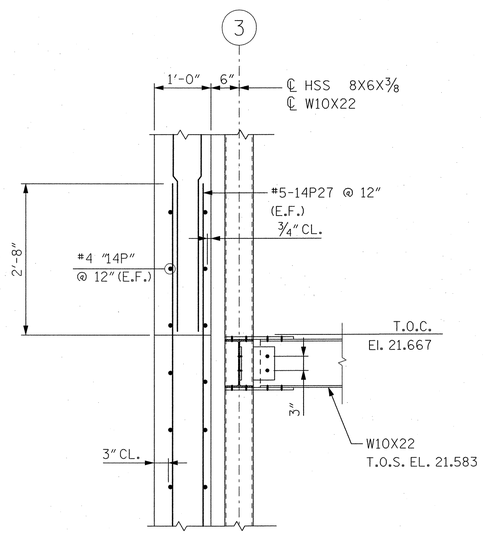

SECTION A-A

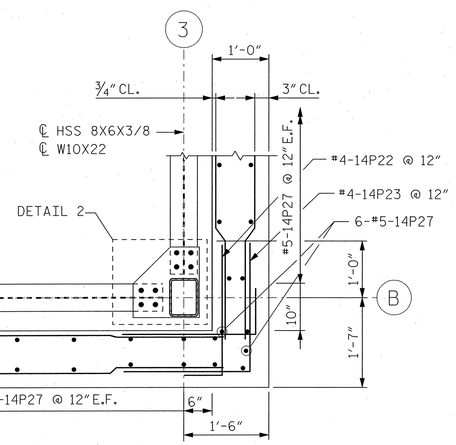

DETAIL 1

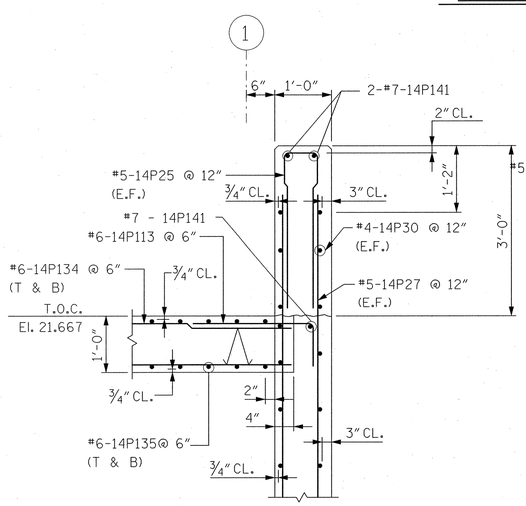

SECTION B-B

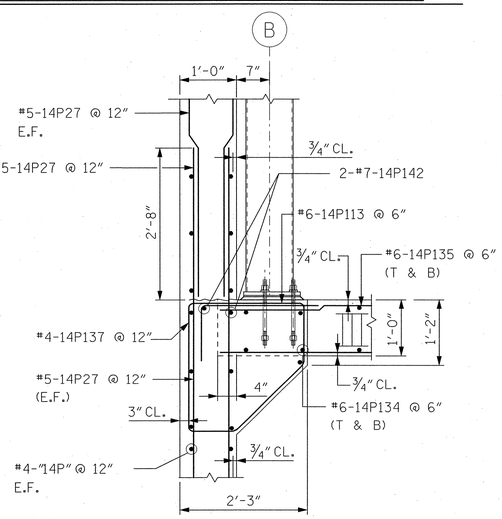

SECTION C-C

NOTES:

1. FOR CONTROL HOUSE ELEVATIONS, SEE DWG. B141 AND B142.
2. FOR CONTROL HOUSE GENERAL NOTES, SEE DWG. B140.
3. TOP OF CONCRETE (T.O.C.) ELEVATION SHALL BE EL. 21.667.
4. ALL REINFORCEMENT BAR CLEARANCES SHALL BE AS NOTED ON B140 NOTE D.14.
5. ALL REINFORCEMENT STEEL SHALL BE EPOXY COATED PER ASTM A775.
6. FOR BASE PLATE AND ANCHOR BOLT DETAILS, SEE DWG. B148.
7. FOR SECTIONS H-H, J-J AND K-K, SEE DWG. B148.

LEGEND:

MC INDICATES MOMENT CONNECTION

PROJECT NO. B-2532

CRAVEN COUNTY

STATION: 31+21.29 -L-

STATE OF NORTH CAROLINA
DEPARTMENT OF TRANSPORTATION
RALEIGH, NC

CONTROL HOUSE
ELECTRICAL ROOM
PLAN AND DETAILS

NORTH CAROLINA PROFESSIONAL ENGINEER SEAL 12916 PAUL J. BARBER 10/20/06

HNTB NORTH CAROLINA, P.C.
343 E. Six Forks Rd., Suite 200, Raleigh, N.C. 27609

DRAWN BY SPL DATE 10/06
CHECKED BY ALB DATE 10/06

DWG. NO. B144

REVISIONS						SHEET NO.
NO.	BY	DATE	NO.	BY	DATE	S-165
1			3			TOTAL SHEETS
2			4			348

Jobno AT W10002
User: 10/20/2006 11:17 AM
J:\2004\42873 - Alfred Cunningham\DGN\100% Submission\B2532_SD_B144_CHeatrylevel.dgn

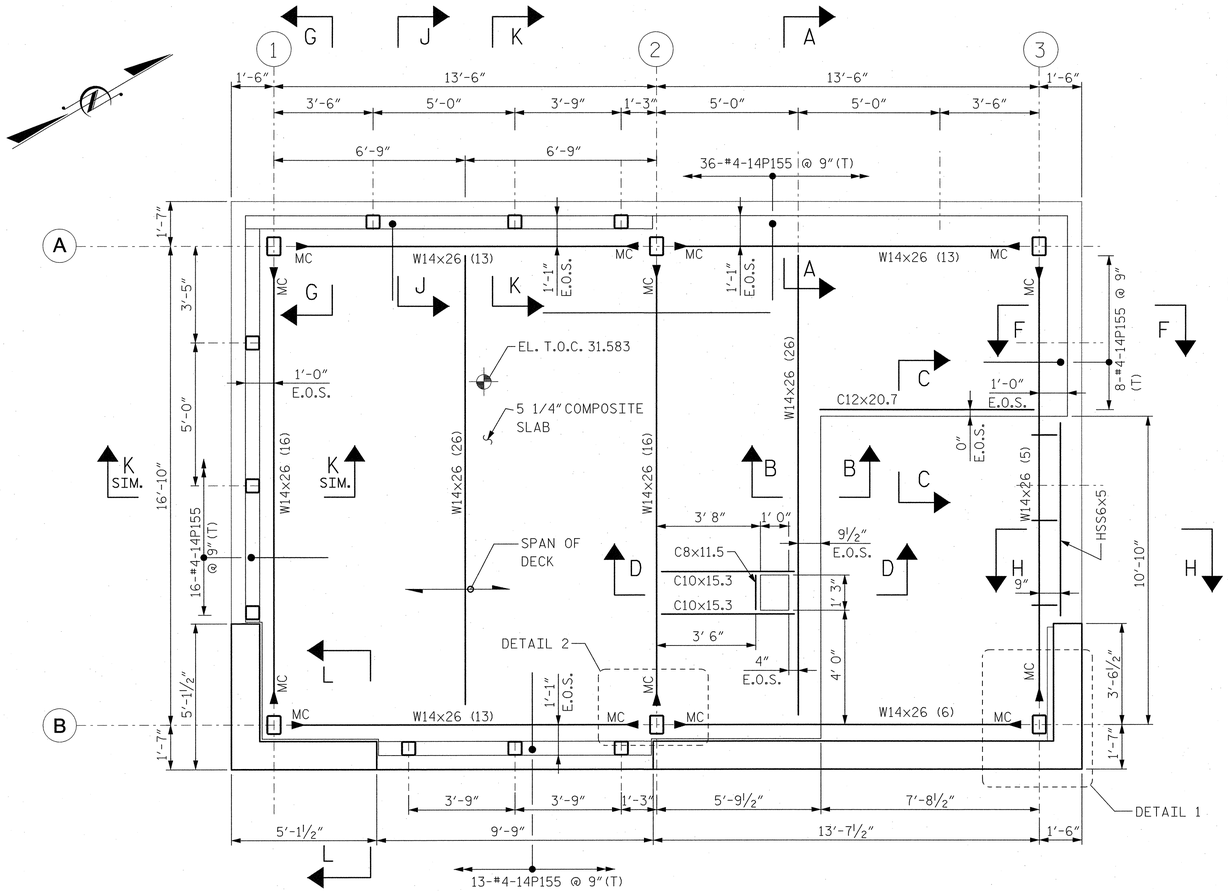

CONTROL ROOM PLAN AT EL. 31.583

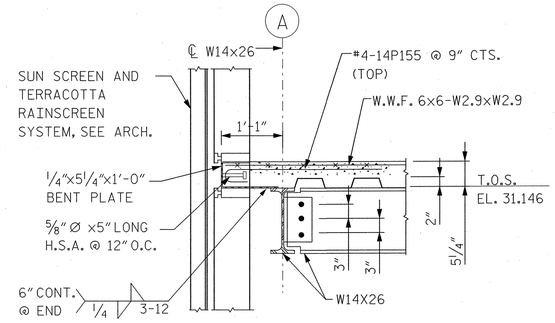

SECTION A-A

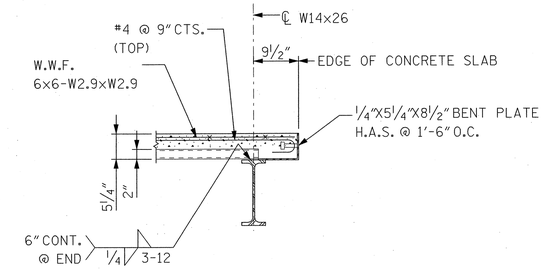

SECTION B-B

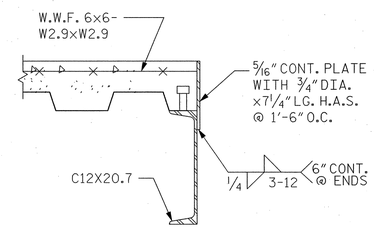

SECTION C-C

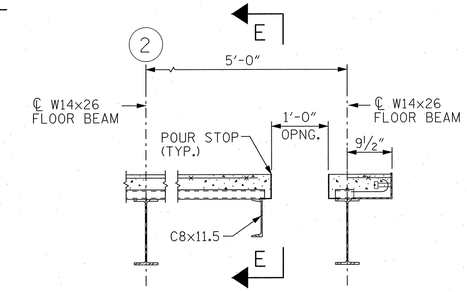

SECTION D-D

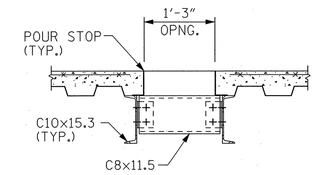

SECTION E-E

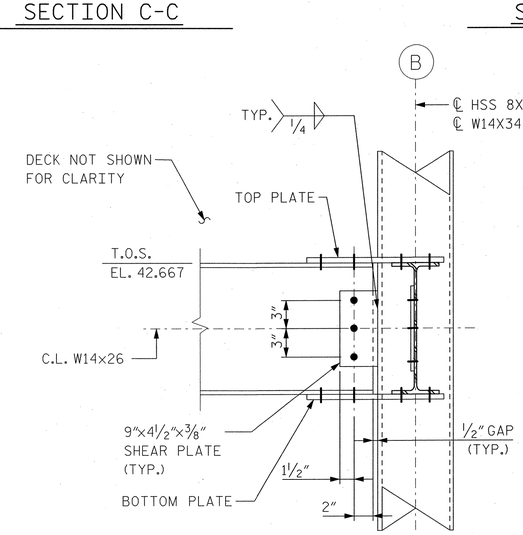

SECTION M-M

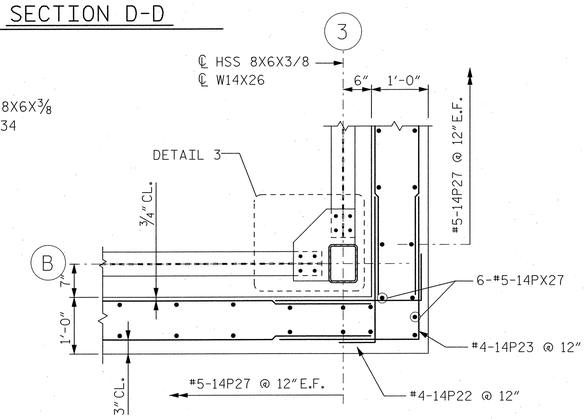

DETAIL 1

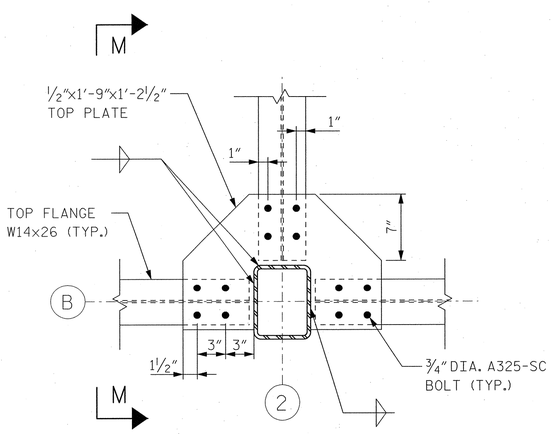

DETAIL 2

AT TOP PLATE (BOTTOM PLATE SIM.)

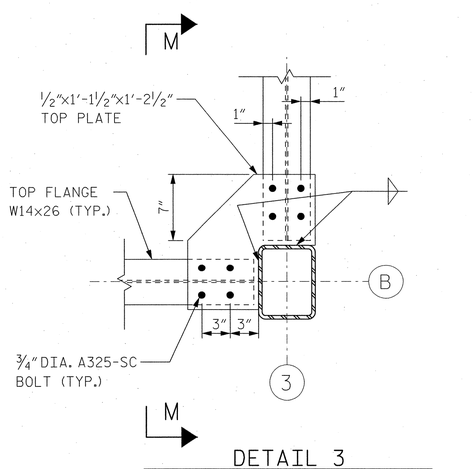

DETAIL 3

AT TOP PLATE (BOTTOM PLATE SIM.)

LEGEND:

► MC INDICATES MOMENT CONNECTION

W14x26 (XX) — INDICATES NUMBER OF SHEAR STUDS

NOTES:

1. TOP OF STEEL (T.O.S.) ELEVATION SHALL BE EL. 31.146.
2. TOP OF CONCRETE (T.O.C.) ELEVATION SHALL BE EL. 31.583.
3. ELEVATED SLAB CONSTRUCTION SHALL BE 3¼" LIGHT WEIGHT CONCRETE OVER 2" - 20 GAUGE GALVANIZED COMPOSITE STEEL DECK (TOTAL THICKNESS 5¼").
4. FOR SECTIONS F-F TO L-L, SEE DWG. NO. B149.

NORTH CAROLINA PROFESSIONAL SEAL 12916 ENGINEER PAUL J. BARBER 10/20/06

PROJECT NO. B-2532

CRAVEN COUNTY

STATION: 31+21.29 -L-

STATE OF NORTH CAROLINA
DEPARTMENT OF TRANSPORTATION
RALEIGH, NC

CONTROL HOUSE
CONTROL ROOM LEVEL
PLAN AND DETAILS

HNTB — HNTB NORTH CAROLINA, P.C.
343 E. Six Forks Rd., Suite 200, Raleigh, N.C. 27609

DRAWN BY SPL DATE 10/06
CHECKED BY ALB DATE 10/06
DWG. NO. B145

REVISIONS						SHEET NO.
NO.	BY	DATE	NO.	BY	DATE	S-166
1			3			TOTAL SHEETS
2			4			348

jallo AT W10072
10/20/2006 12:00:00 PM
J:\cadd\42573 - Alfred Cunningham\OGIN 1002 Submission\B2532_SD_B145_Chcontrol.mdgn

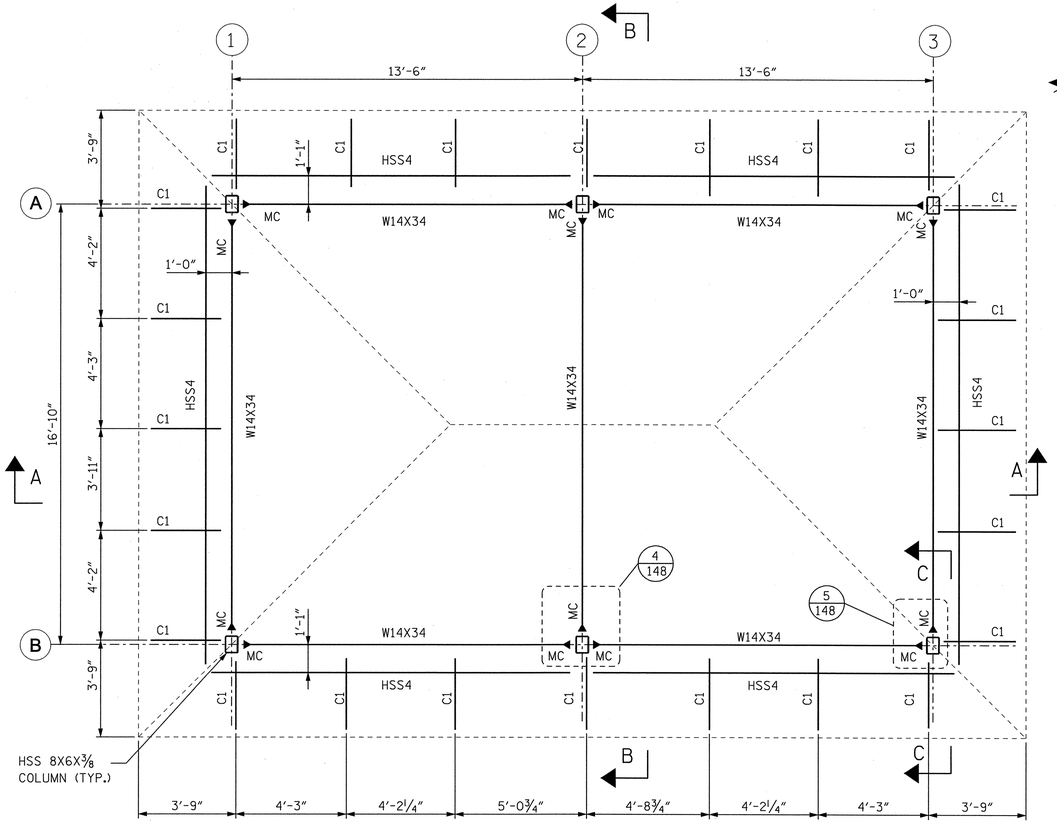

LOWER ROOF PLAN AT T.O.S. EL. 42.667

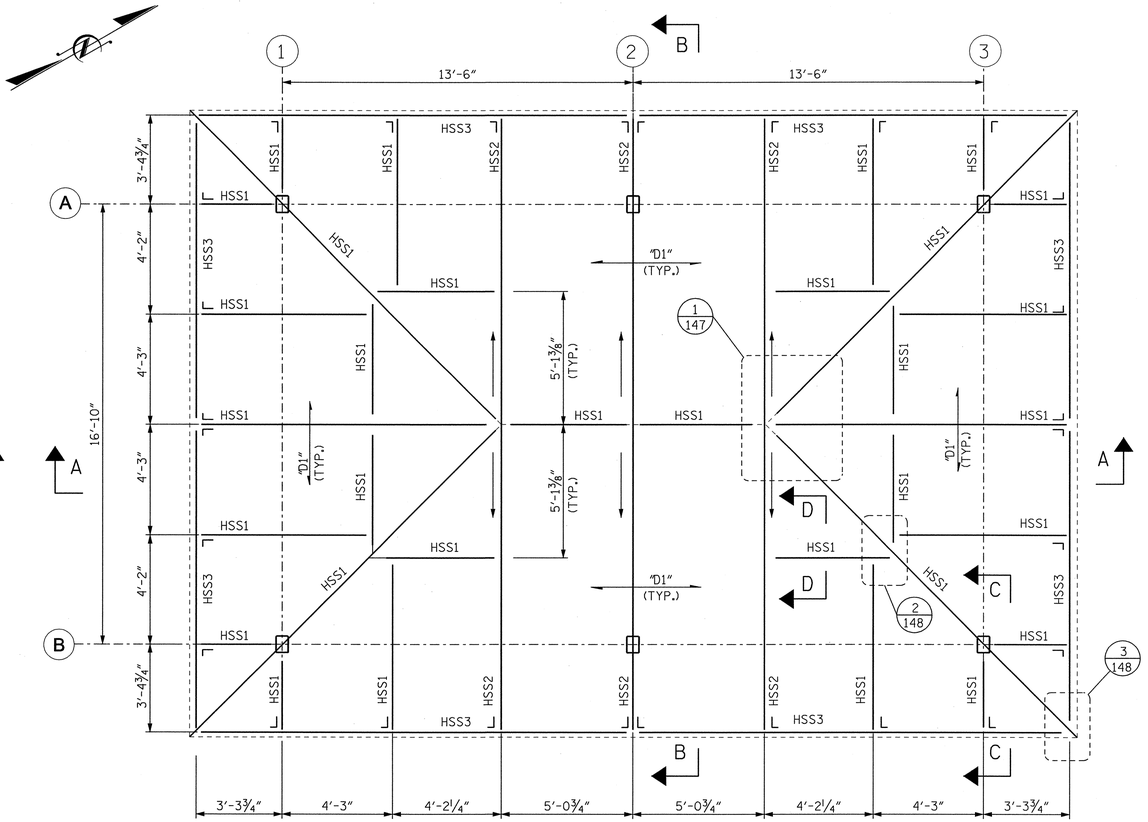

UPPER ROOF PLAN

LEGEND:

▶ MC	INDICATES MOMENT CONNECTION
"D1"	INDICATES 1½" TYPE B, 18 GAUGE METAL ROOF DECK
HSS1	INDICATES HSS 10x4x¼
HSS2	INDICATES HSS 10x4x⅜
HSS3	INDICATES HSS 12x2x3/16
HSS4	INDICATES HSS 12x4x¼
C1	INDICATES C 10x15.3

NOTES:

1. FOR CONTROL HOUSE ELEVATIONS, SEE DWG. B141 AND B142.
2. FOR CONTROL HOUSE GENERAL NOTES, SEE DWG. B140.
3. FOR SECTIONS A-A TO D-D, SEE DWG. B147.

PROJECT NO. B-2532

CRAVEN COUNTY

STATION: 31+21.29 -L-

STATE OF NORTH CAROLINA
DEPARTMENT OF TRANSPORTATION
RALEIGH, NC

CONTROL HOUSE
ROOF FRAMING PLANS

NORTH CAROLINA PROFESSIONAL SEAL 12916 ENGINEER PAUL J. BARBER 10/10/06

HNTB NORTH CAROLINA, P.C.
343 E. Six Forks Rd., Suite 200, Raleigh, N.C. 27609

DRAWN BY SPL DATE 10/06
CHECKED BY ALB DATE 10/06

DWG. NO. B146

REVISIONS						SHEET NO.
NO.	BY	DATE	NO.	BY	DATE	S-167
1			3			TOTAL SHEETS
2			4			348

slam AT NYOD111
18-OCT-2006 14:50
J:\cadd\42673 - Alfred Cunningham\DGN\100% Submission\B2532_SD_B146_CHroofplan.dgn

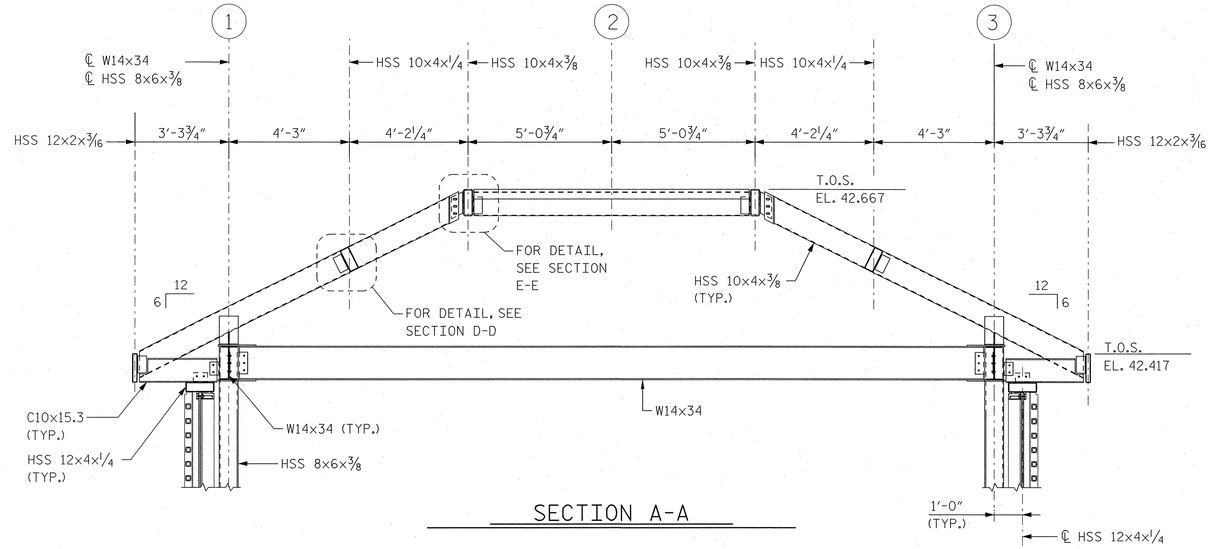

SECTION A-A

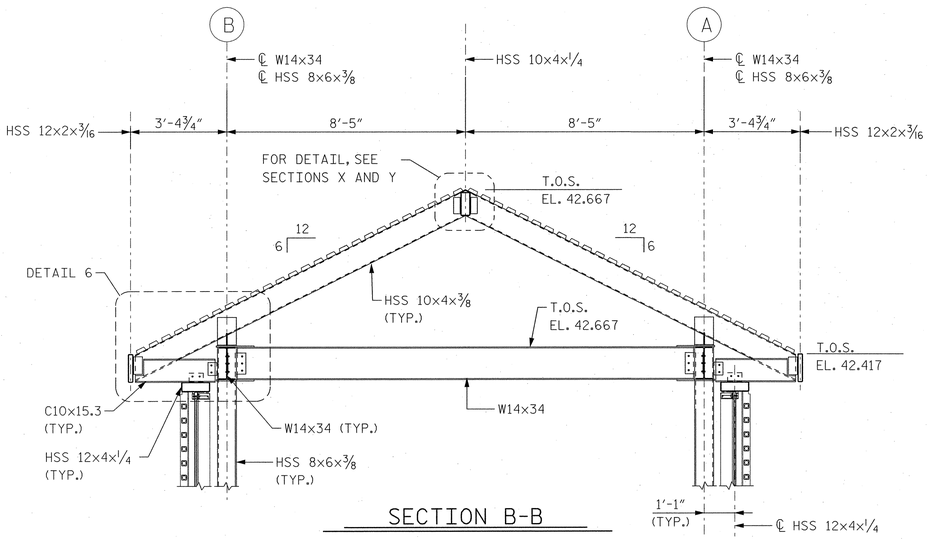

SECTION B-B

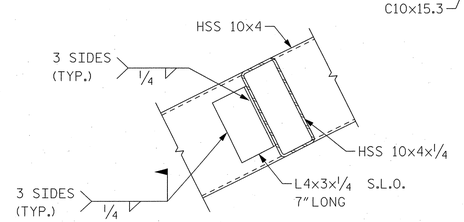

SECTION D-D

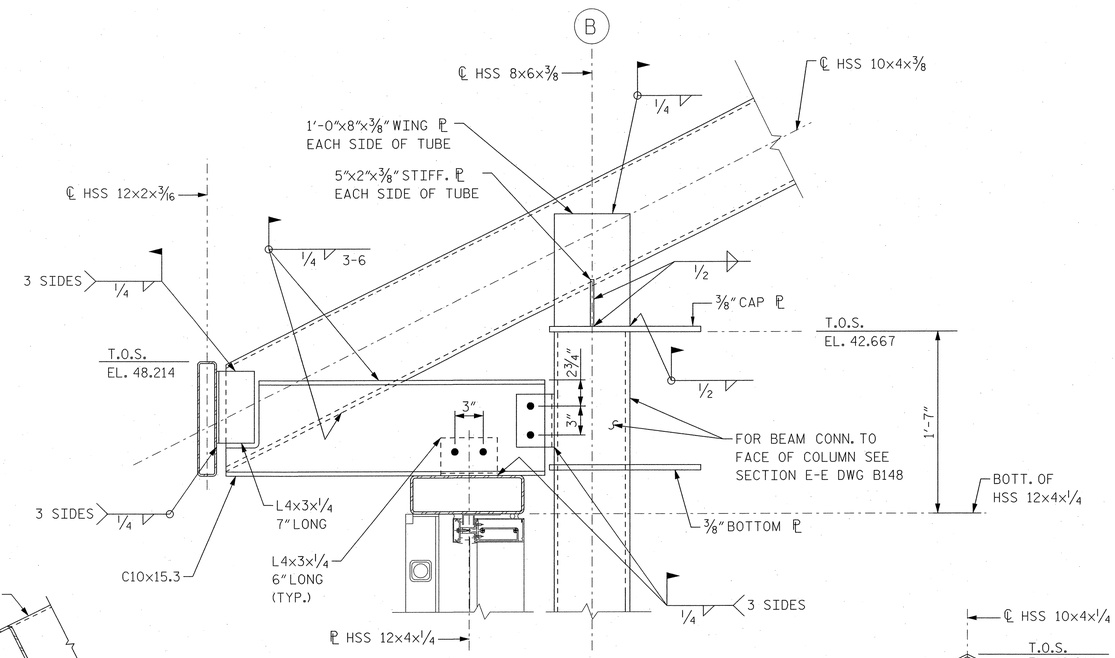

DETAIL 6

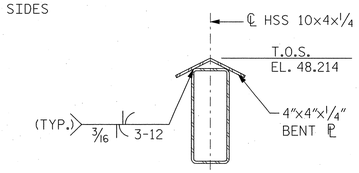

SECTION F-F

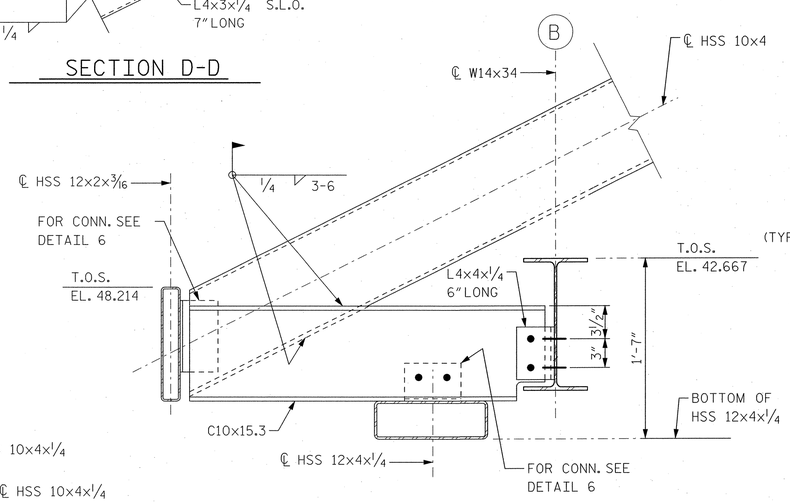

SECTION C-C

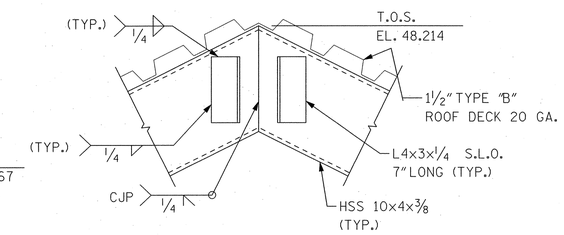

SECTION G-G

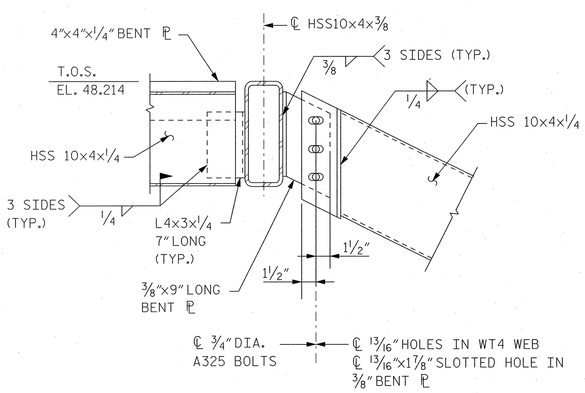

SECTION E-E

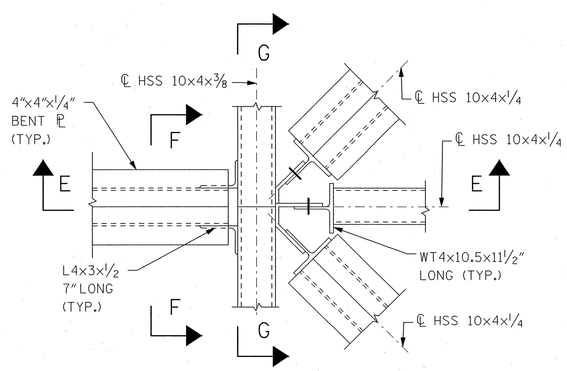

DETAIL 1

NOTES:

1. FOR ROOF FRAMING PLANS, SEE DWG. B146.
2. FOR LOCATION OF SECTIONS A-A TO D-D, SEE DWG. B146.

NORTH CAROLINA PROFESSIONAL SEAL 12916 ENGINEER PAUL J. BARBER 10/29/06

PROJECT NO. B-2532

CRAVEN COUNTY

STATION: 31+21.29 -L-

STATE OF NORTH CAROLINA
DEPARTMENT OF TRANSPORTATION
RALEIGH, NC

CONTROL HOUSE
ROOF FRAMING DETAILS - 1

HNTB NORTH CAROLINA, P.C.
343 E. Six Forks Rd., Suite 200, Raleigh, N.C. 27609

DRAWN BY SPL DATE 10/06
CHECKED BY ALB DATE 10/06

DWG. NO. B147

REVISIONS						SHEET NO.
NO.	BY	DATE	NO.	BY	DATE	S-168
1			3			TOTAL SHEETS
2			4			348

jello ...\T_W10072
ENCT_B2532_SD_B147
J:\cadd\42873 - Alfred Cunningham\OSHA 1002\ Submission\B2532_SD_B147_Chkref del 1.dgn

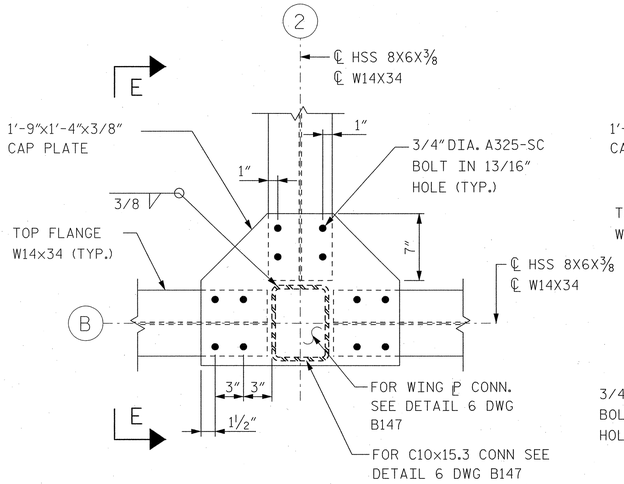

DETAIL 4
AT CAP PLATE

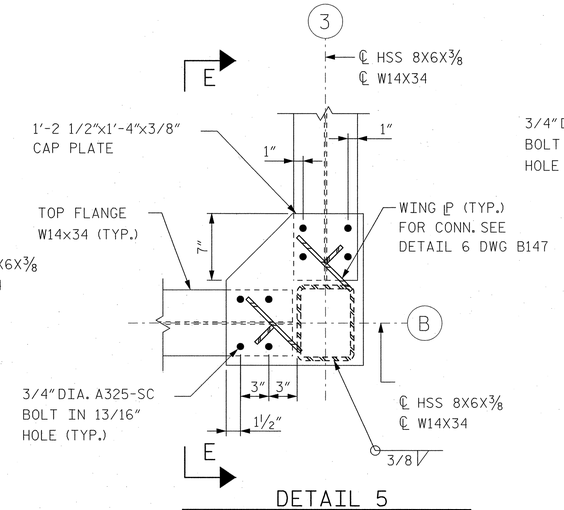

DETAIL 5
AT CAP PLATE

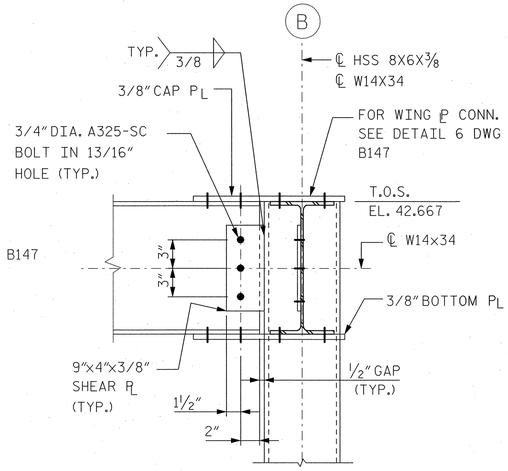

SECTION E-E

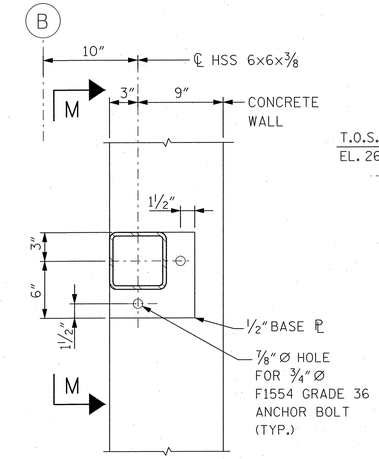

SECTION J-J

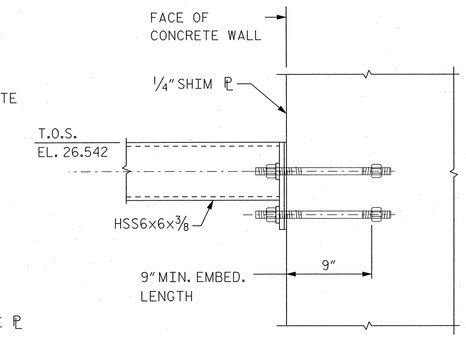

SECTION M-M

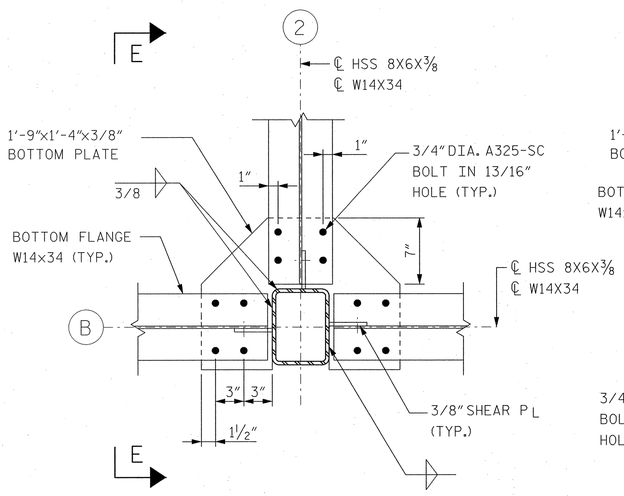

DETAIL 4
AT BOTTOM PLATE

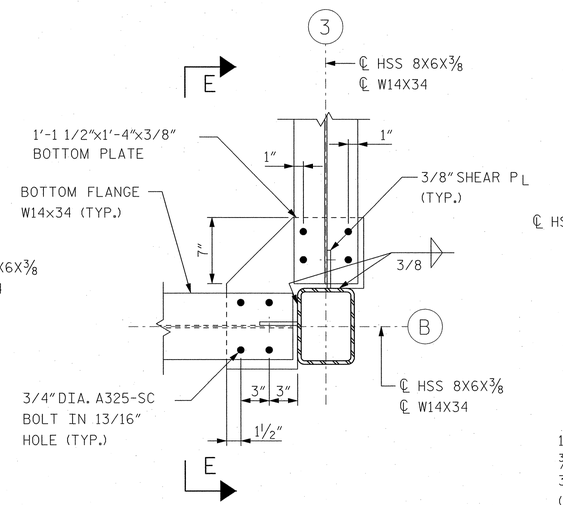

DETAIL 5
AT BOTTOM PLATE

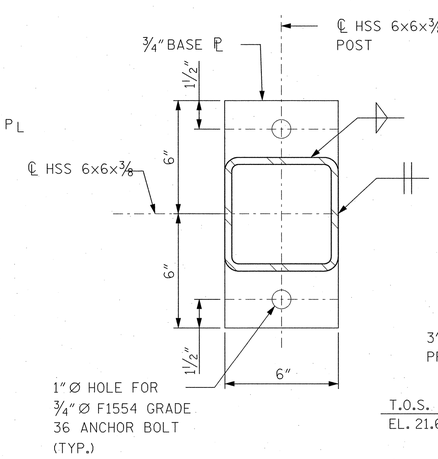

SECTION A-A

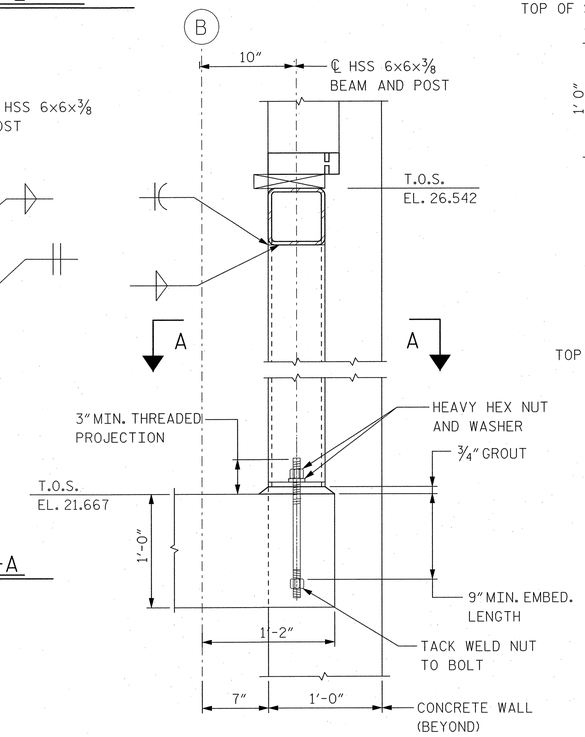

SECTION H-H

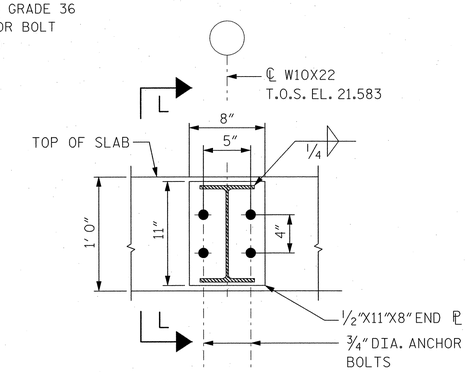

SECTION K-K

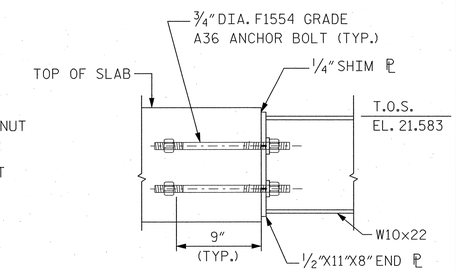

SECTION L-L

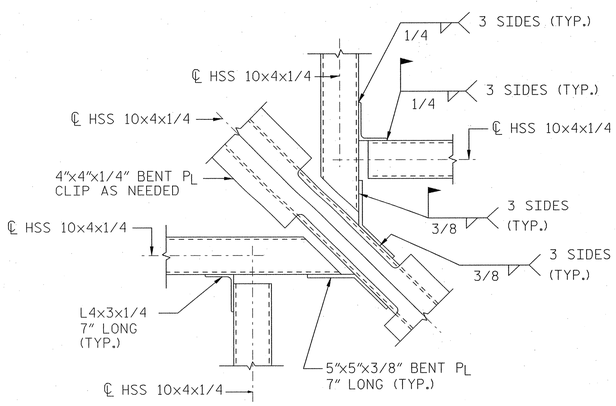

DETAIL 2

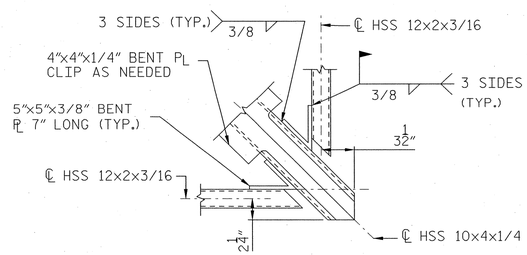

DETAIL 3

NOTES:

1. FOR ROOF FRAMING PLANS, SEE DWG. B146.
2. FOR LOCATION OF DETAILS 2 TO 5, SEE DWG. B146.

NORTH CAROLINA PROFESSIONAL SEAL 12916 ENGINEER PAUL J. DARBER 10/3/06

PROJECT NO. B-2532
CRAVEN COUNTY
STATION: 31+21.29 -L-

STATE OF NORTH CAROLINA
DEPARTMENT OF TRANSPORTATION
RALEIGH, NC

CONTROL HOUSE
STRUCTURAL DETAILS - 1

HNTB
HNTB NORTH CAROLINA, P.C.
343 E. Six Forks Rd., Suite 200, Raleigh, N.C. 27609

DRAWN BY ALB DATE 10/06
CHECKED BY ALB DATE 10/06
DWG. NO. B148

REVISIONS						SHEET NO.
NO.	BY	DATE	NO.	BY	DATE	S-169
1			3			TOTAL SHEETS
2			4			348

Jella AT W10007.2
10/3/2006 2:29:46
U:\cadd\42873_Alfred Cunningham\DGN\1002_Submission\B2532_SD_B148_Chkrd\Det2.dgn

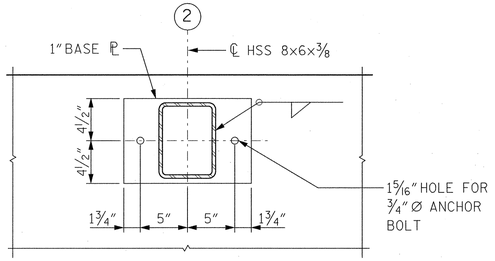

DETAIL 1

BASE PLATE

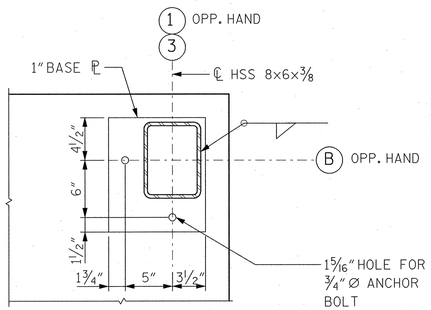

DETAIL 2

BASE PLATE

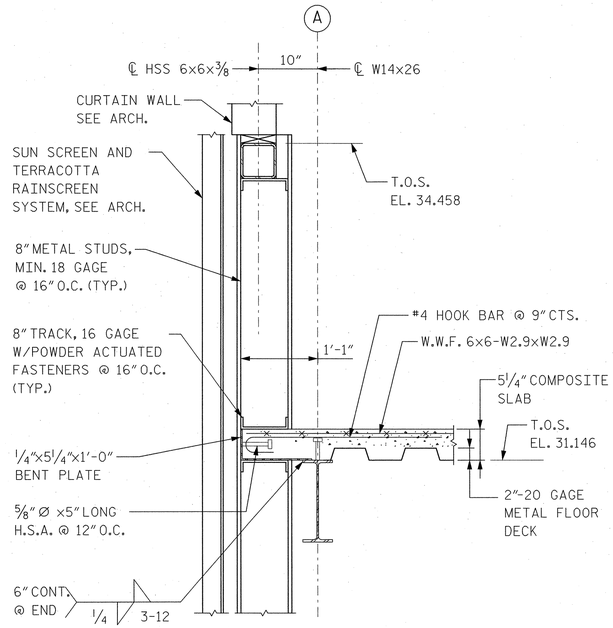

SECTION J-J

AT CANTILEVER SLAB

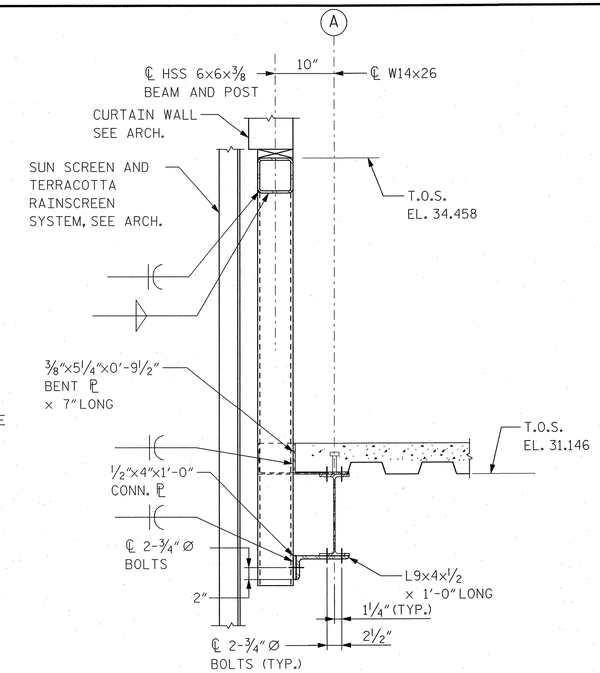

SECTION K-K

AT SUPPORT POST

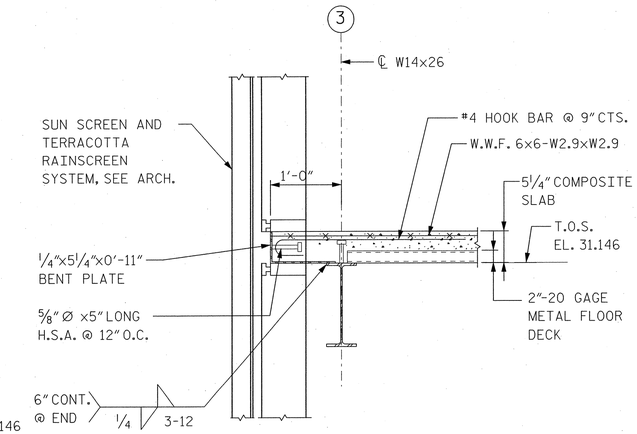

SECTION F-F

AT EDGE OF SLAB

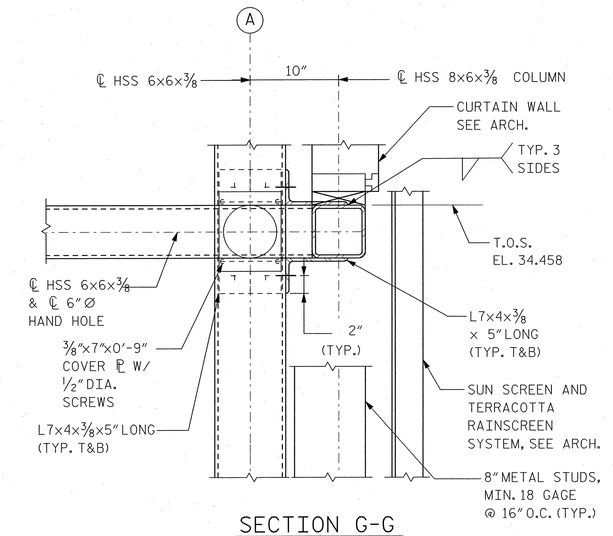

SECTION G-G

AT COLUMN

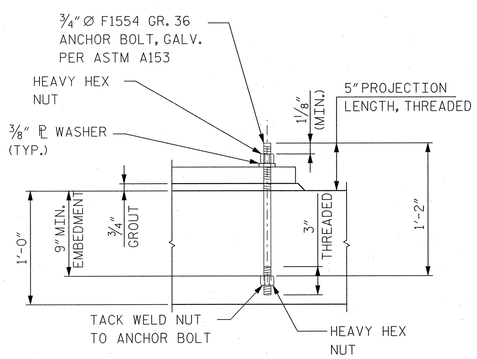

ANCHOR BOLT DETAIL

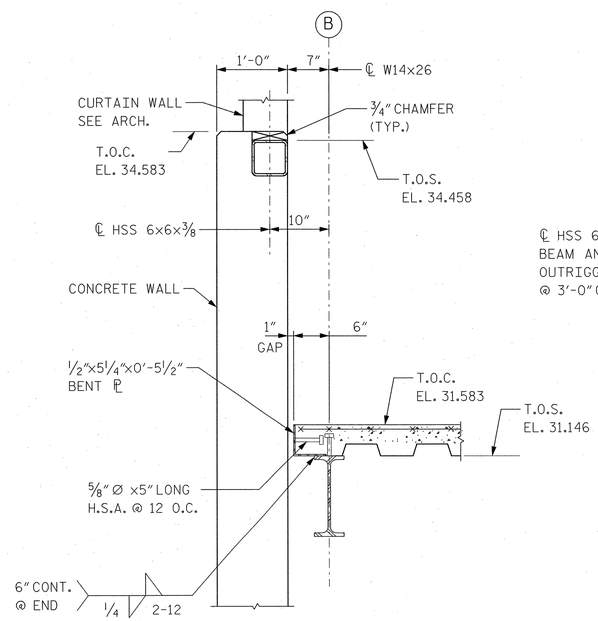

SECTION L-L

AT CONCRETE WALL

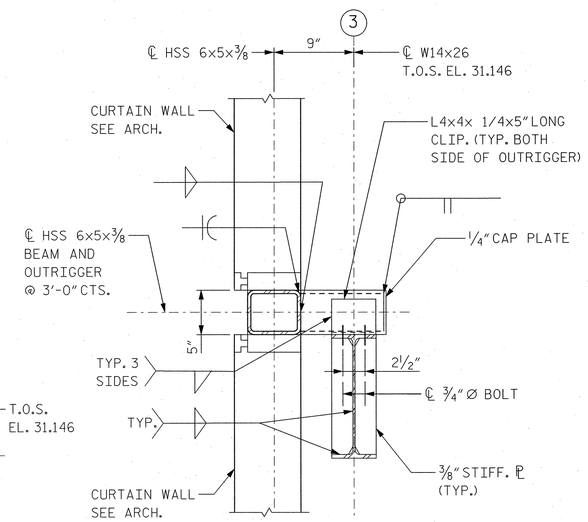

SECTION H-H

AT STAIRWELL

NOTES:

1. FOR CONTROL HOUSE ELEVATIONS, SEE DWG NOS. B141 AND B142.
2. FOR CONTROL HOUSE GENERAL NOTES, SEE DWG. NO. B140.
3. ALL REINFORCEMENT BAR CLEARANCES SHALL BE AS NOTED ON DWG. B141 NOTE D.13.
4. ALL REINFORCEMENT STEEL SHALL BE EPOXY COATED PER ASTM A775.
5. FOR LOCATION OF SECTIONS F-F TO L-L, SEE DWG. NO. B145.

NORTH CAROLINA PROFESSIONAL SEAL 12916 ENGINEER PAUL J. BARBER 12/21/06

PROJECT NO. B-2532

CRAVEN COUNTY

STATION: 31+21.29 -L-

STATE OF NORTH CAROLINA
DEPARTMENT OF TRANSPORTATION
RALEIGH, NC

CONTROL HOUSE
STRUCTURAL DETAILS - 2

HNTB NORTH CAROLINA, P.C.
343 E. Six Forks Rd., Suite 200, Raleigh, N.C. 27609

DRAWN BY SPL DATE 10/06
CHECKED BY ALB DATE 10/06

DWG. NO. B149

REVISIONS						SHEET NO.
NO.	BY	DATE	NO.	BY	DATE	S-170
1			3			TOTAL SHEETS
2			4			348

Jobs - JT_W102072
Proj - CT_B2532_R_TOPS
J:\cadd\42673 - Alfred Cunningham\DGN\1002_Submission\B2532_SD_B149_CrtDetails2.dgn

NOTES

FOR SECTIONS, SEE SHEET 2 OF 3.

FOR ADDITIONAL NOTES, SEE SHEET 3 OF 3.

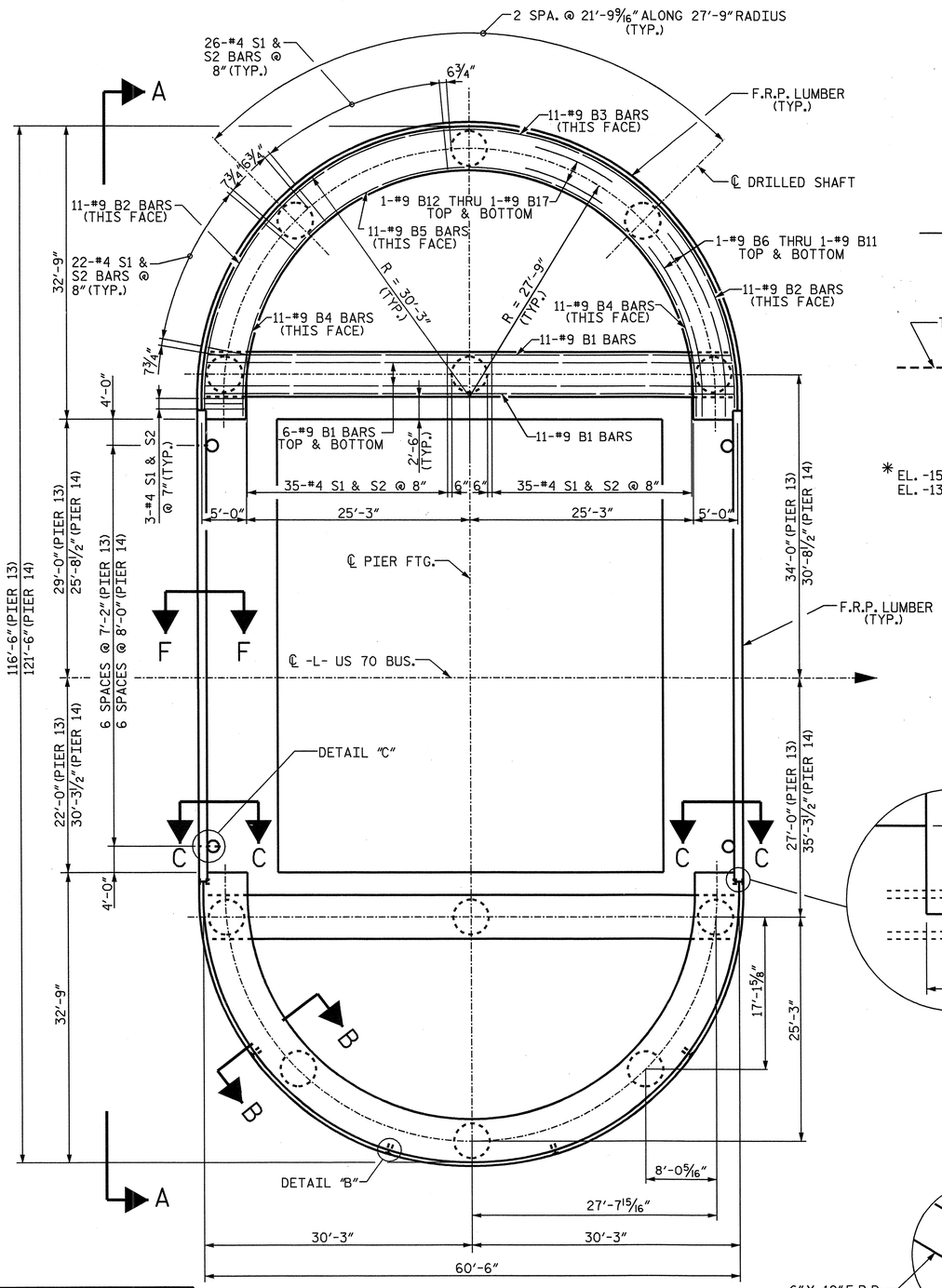

NOTE:
"B" BARS ARE SPLICED 8'-0" MIN.

PIER PROTECTION PLAN

(FOR W.P. AND BASCULE PIER DIMENSIONS SEE DETAIL A)
REINFORCING STEEL IS SYMMETRICAL
ABOUT PIER PROTECTION CENTERLINE

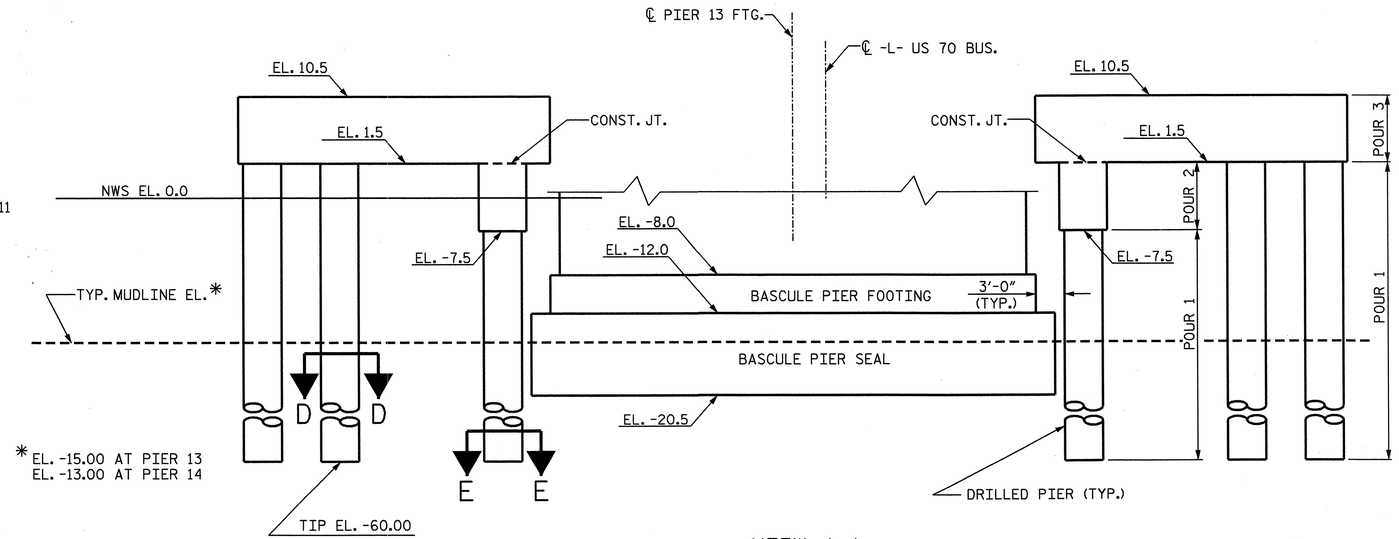

VIEW A-A

(PIER 13 SHOWN PIER 14 SIMILAR)

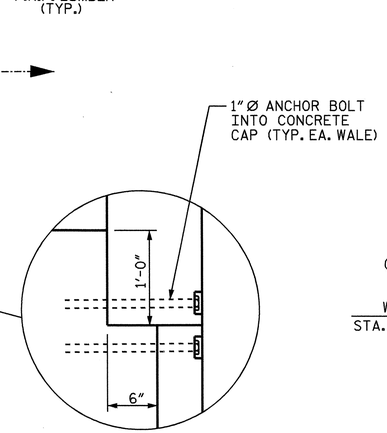

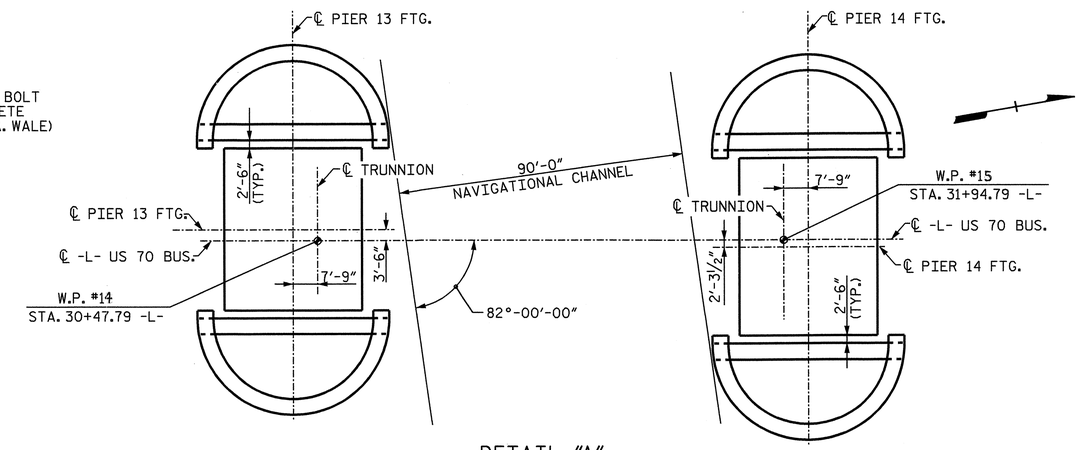

DETAIL "A"

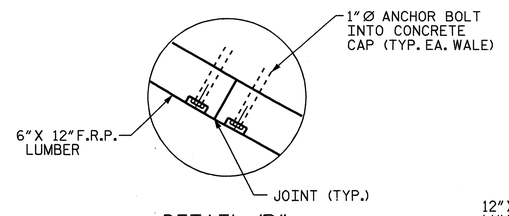

DETAIL "B"

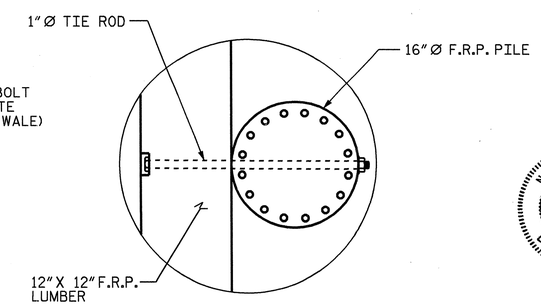

DETAIL "C"

PROJECT NO. B-2532

CRAVEN COUNTY

STATION: 31+21.29 -L-

SHEET 1 OF 3

STATE OF NORTH CAROLINA
DEPARTMENT OF TRANSPORTATION
RALEIGH

BASCULE PIER
FENDER SYSTEM DETAILS
ALFRED CUNNINGHAM
BRIDGE OVER
THE TRENT RIVER

NORTH CAROLINA PROFESSIONAL SEAL 26936 ENGINEER DAVID S. STUTTS 12/7/06

REVISIONS								SHEET NO.
NO.	BY:	DATE:	NO.	BY:	DATE:			S-171
1			3					TOTAL SHEETS
2			4					348

DWG. NO. B-150

DRAWN BY : R. D. MARTIN DATE : 10/06
CHECKED BY : H. A. LUCAS DATE : 12/06

07-DEC-2006 11:22
U:\rory\english\B2532_sd_B*_FenderSystem.dgn
rmartin

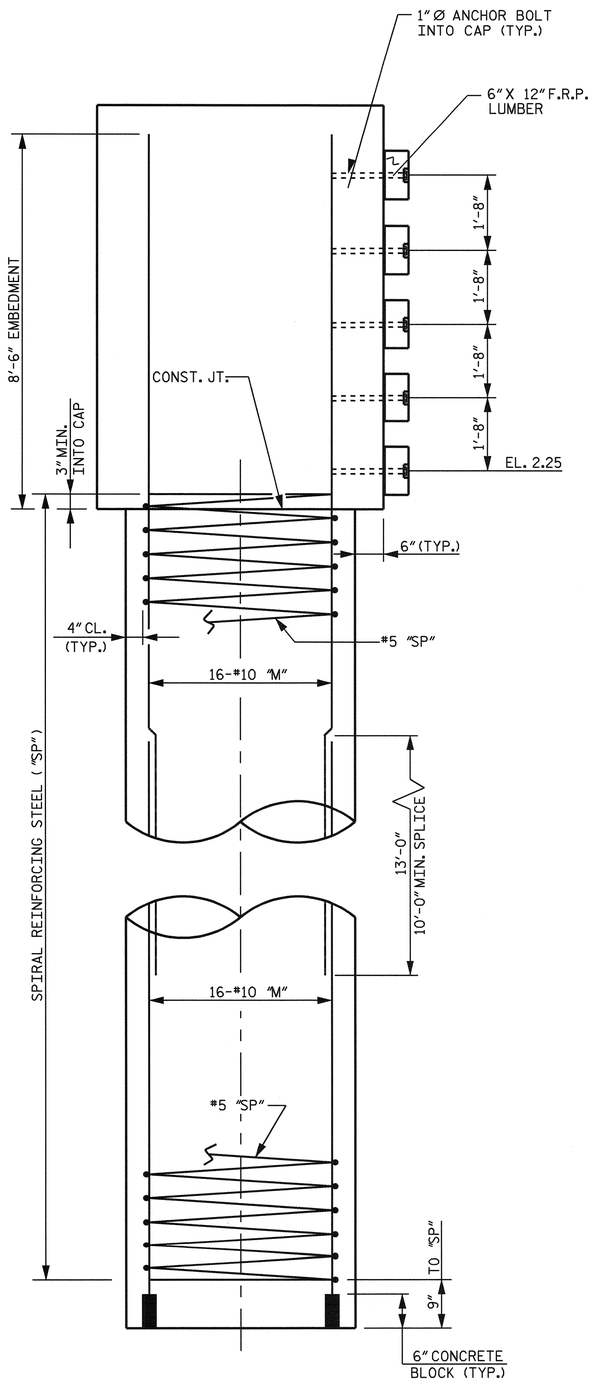

SECTION B-B

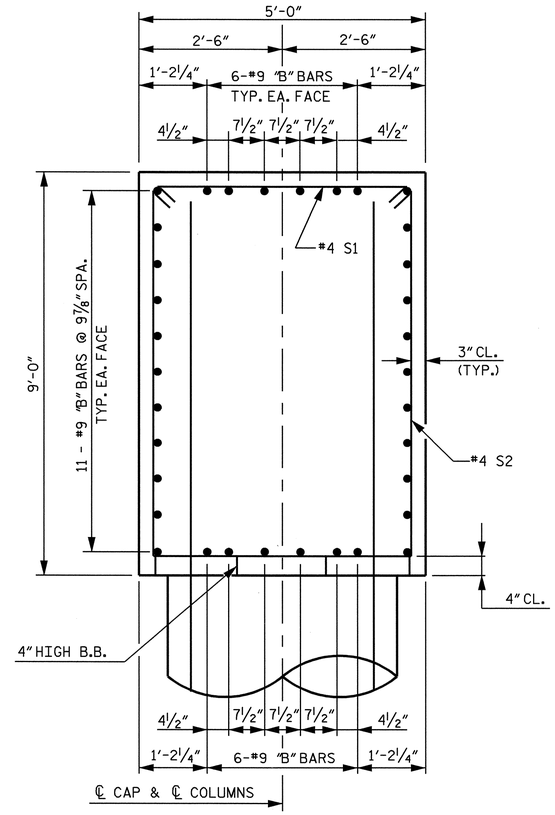

SECTION THRU CAP

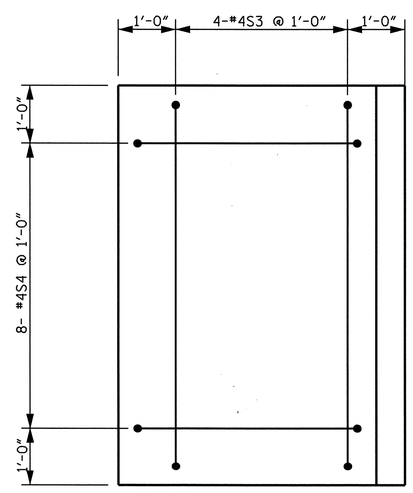

VIEW C-C

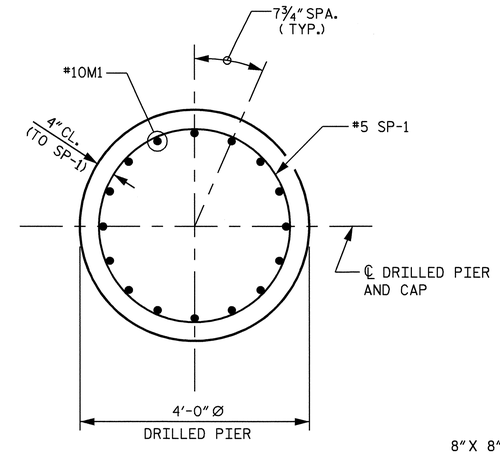

SECTION D-D

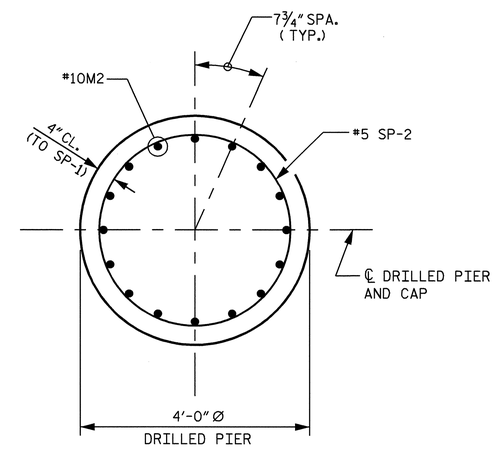

SECTION E-E

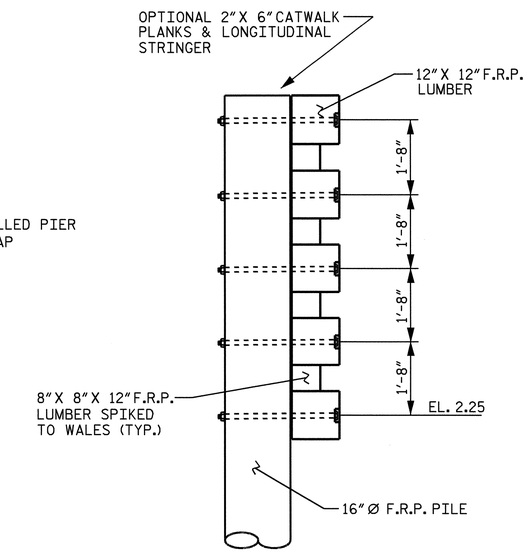

SECTION F-F

PROJECT NO. B-2532

CRAVEN COUNTY

STATION: 31+21.29 -L-

SHEET 2 OF 3

STATE OF NORTH CAROLINA
DEPARTMENT OF TRANSPORTATION
RALEIGH

BASCULE PIER
FENDER SYSTEM DETAILS
ALFRED CUNNINGHAM
BRIDGE OVER
THE TRENT RIVER

NORTH CAROLINA PROFESSIONAL SEAL 26936 ENGINEER DAVID S. STUTTS 12/7/06

REVISIONS						SHEET NO.
NO.	BY:	DATE:	NO.	BY:	DATE:	S-172
1			3			TOTAL SHEETS
2			4			348

DRAWN BY : R. D. MARTIN DATE : 10/06
CHECKED BY : H. A. LUCAS DATE : 12/06

DWG. NO. B-151

07-DEC-2006 11:22
u:\rory\english\B2532_sd_B*_FenderSystem.dgn
rmartin

NOTES

DRILLED PIERS AT BENT 13 & 14 FENDER SYSTEMS ARE DESIGNED FOR BOTH SKIN FRICTION AND END BEARING. CHECK FIELD CONDITIONS FOR THE REQUIRED END BEARING CAPACITY OF 30 TSF.

PERMANENT STEEL CASING IS REQUIRED FOR BENT 13 & 14 FENDER SYSTEMS. DO NOT EXTEND THE CASING BELOW ELEVATION -32 FT. SEE DRILLED PIER SPECIAL PROVISION.

DRILLED PIERS AT BENTS 13 & 14 FENDER SYSTEMS SHALL EXTEND TO AN ELEVATION NO HIGHER THAN -60 FT. AND SATISFY REQUIRED END BEARING CAPACITY.

SLURRY CONSTRUCTION IS REQUIRED FOR DRILLED PIERS AT BENTS 13 & 14 FENDER SYSTEMS, SEE DRILLED PIERS SPECIAL PROVISION.

FOR DRILLED PIERS, SEE DRILLED PIERS SPECIAL PROVISION.

THE SCOUR CRITICAL ELEVATION FOR BENTS 13 & 14 FENDER SYSTEMS IS ELEVATION -40 FT. SCOUR CRITICAL ELEVATIONS ARE USED TO MONITOR POSSIBLE SCOUR PROBLEMS DURING THE LIFE OF THE STRUCTURE.

FOR MASS CONCRETE AT BENT 13 & 14 FENDER SYSTEMS, SEE SPECIAL PROVISIONS.

CLASS AA CONCRETE SHALL BE USED IN ALL CAPS AND SHALL CONTAIN CALCIUM NITRITE CORROSION INHIBITOR.

DRILLED PIER CONCRETE SHALL CONTAIN CALCIUM NITRITE CORROSION INHIBITOR.

SID INSPECTIONS MAY BE REQUIRED TO INSPECT BOTTOM CLEANLINESS OF THE DRILLED PIERS AT BENT 13 & 14 FENDER SYSTEMS, SEE DRILLED PIER SPECIAL PROVISION.

CSL TUBES ARE REQUIRED AND CSL TESTING MAY BE REQUIRED FOR THE DRILLED PIERS. THE ENGINEER WILL DETERMINE THE NEED FOR CSL TESTING. SEE CROSSHOLE SONIC LOGGING SPECIAL PROVISION.

ALL HARDWARE HOTDIPPED GAVANIZED OR STAINLESS STEEL.

FOR FIBERGLASS REINFORCED PLASTIC LUMBER (F.R.P.L.) AND FIBERGLASS REINFORCED PLASTIC PILES (F.R.P.P.), SEE PIER PROTECTION FENDERING SPECIAL PROVISION.

PERMANENT STEEL CASINGS FOR DRILLED PIERS SHALL BE METALLIZED FROM THE TOP OF THE DRILLED PIER TO ELEVATION -3.000 USING AN 8 MIL THICK 1350 ALUMINUM (W-AI-1350) THERMAL SPRAYED COATING WITH A 0.5 MIL THICK SEAL COAT IN ACCORDANCE WITH THE THERMAL SPRAYED COATINGS (METALLIZATION) SPECIAL PROVISION AND SECTION 442 (METALLIZATION) SPECIAL PROVISION AND SECTION 442 OF THE STANDARD SPECIFICATIONS. FOR THERMAL SPRAYED COATINGS (METALLIZATION), SEE SPECIAL PROVISIONS.

INSTALL PERMANENT STEEL CASING BY VIBRATING, SCREWING OR DRIVING THE CASING BEFORE EXCAVATION OR DISTURBING ANY MATERIAL BELOW ELEVATION -20 FT.

FOR FIBERGLASS REINFORCED PLASTIC PILES (F.R.P.P.) SHALL BE DRIVEN TO AN APPROXIMATE TIP ELEVATION OF -32.0 FT.

FOR NAVIGATIONAL LIGHT DETAILS, SEE DWG. NO. E-49 & E-50.

CROSSHOLE SONIC LOGGING, SID INSPECTION AND SPT TESTING QUANTITIES ARE INCLUDED IN THE APPROACH SPAN BILL OF MATERIAL.

BAR TYPES

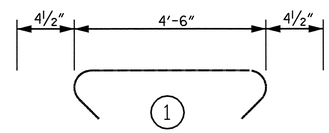

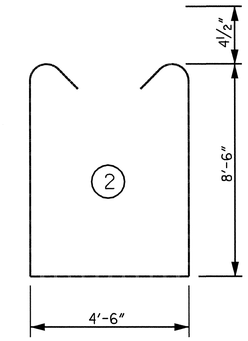

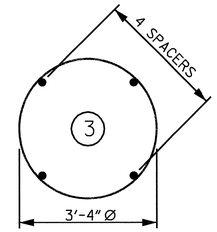

MARK	A	R
B2	34'-2"	29'-10 15/16"
B4	29'-2"	25'-7 1/16"
B6	30'-2"	26'-5 1/4"
B7	30'-7"	26'-9 3/4"
B8	31'-4"	27'-5 1/4"
B9	32'-0"	28'-0 3/4"
B10	32'-9"	28'-8 1/4"
B11	33'-2"	29'-0 3/4"

MARK	B	R
B3	41'-6"	29'-10 15/16"
B5	35'-6"	25'-7 1/16"
B12	36'-9"	26'-5 1/4"
B13	37'-3"	26'-9 3/4"
B14	38'-1"	27'-5 1/4"
B15	39'-0"	28'-0 3/4"
B16	39'-10"	28'-8 1/4"
B17	40'-4"	29'-0 3/4"

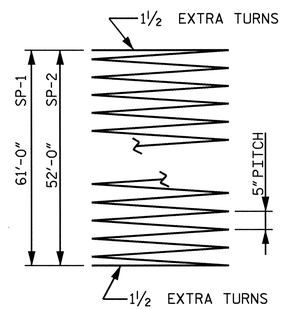

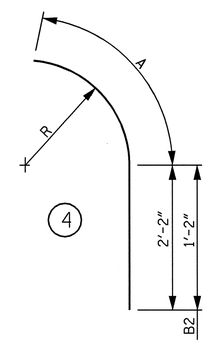

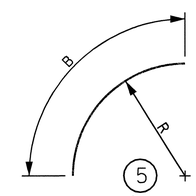

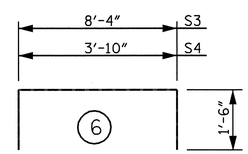

ALL BAR DIMENSIONS ARE OUT TO OUT.

BILL OF MATERIAL

FENDER SYSTEM @ BENTS 13 & 14 (4 REQ'D.)

BAR	NUMBER	SIZE	TYPE	LENGTH	WEIGHT
B1	34	#9	STR	59'-1"	6830
B2	22	#9	4	35'-4"	2643
B3	11	#9	5	41'-6"	1552
B4	22	#9	4	31'-4"	2344
B5	11	#9	5	35'-6"	1328
B6	4	#9	4	32'-4"	440
B7	4	#9	4	32'-9"	445
B8	4	#9	4	33'-6"	456
B9	4	#9	4	34'-2"	465
B10	4	#9	4	34'-11"	475
B11	4	#9	4	35'-4"	481
B12	2	#9	5	36'-9"	250
B13	2	#9	5	37'-3"	253
B14	2	#9	5	38'-1"	259
B15	2	#9	5	39'-0"	265
B16	2	#9	5	39'-10"	271
B17	2	#9	5	40'-4"	274
M1	160	#10	STR	41'-4"	28457
M2	32	#10	STR	36'-9"	5060
S1	172	#4	1	5'-3"	603
S2	172	#4	2	22'-1"	2537
S3	8	#4	6	11'-4"	61
S4	12	#4	6	6'-10"	55
SP-1	3	#5	3	1547'-6"	4842
SP-2	3	#5	3	1324'-8"	4145

EPOXY COATED REINFORCING STEEL (LBS.) 55804

EPOXY COATED SPIRAL COLUMN REINFORCING STEEL (LBS.) 8987

CLASS AA CONCRETE
POUR #2 (C.Y.) 100.4
POUR #3 (C.Y.) 153.6
TOTAL CLASS AA CONCRETE (C.Y.) 254.0

4'-0" Ø CONCRETE DRILLED PIER (LIN. FT.) 342.00

DRILLED PIER CONCRETE
POUR #1 DRILLED PIERS (C.Y.) 159.2

PERMANENT STEEL CASING FOR
4'-0" Ø DRILLED PIER (LIN. FT.) 186.00

PIER PROTECTION FENDERING LUMP SUM

THE "SP" SPIRAL REINFORCING STEEL SHALL BE W31 OR D31 COLD DRAWN WIRE OR #5 PLAIN OR DEFORMED BAR.

PROJECT NO. B-2532
CRAVEN COUNTY
STATION: 31+21.29 -L-

SHEET 3 OF 3

STATE OF NORTH CAROLINA
DEPARTMENT OF TRANSPORTATION
RALEIGH

BASCULE PIER
FENDER SYSTEM DETAILS
ALFRED CUNNINGHAM
BRIDGE OVER
THE TRENT RIVER

NORTH CAROLINA PROFESSIONAL SEAL 26936 ENGINEER DAVID S. STUTTS 12/7/06

REVISIONS						SHEET NO.
NO.	BY:	DATE:	NO.	BY:	DATE:	S-173
1			3			TOTAL SHEETS
2			4			348

DWG. NO. B-152

DRAWN BY : R. D. MARTIN DATE : 10/06
CHECKED BY : H. A. LUCAS DATE : 12/06

07-DEC-2006 11:22
u:\rory\english\B2532_sd_B*_FenderSystem.dgn
rmartin

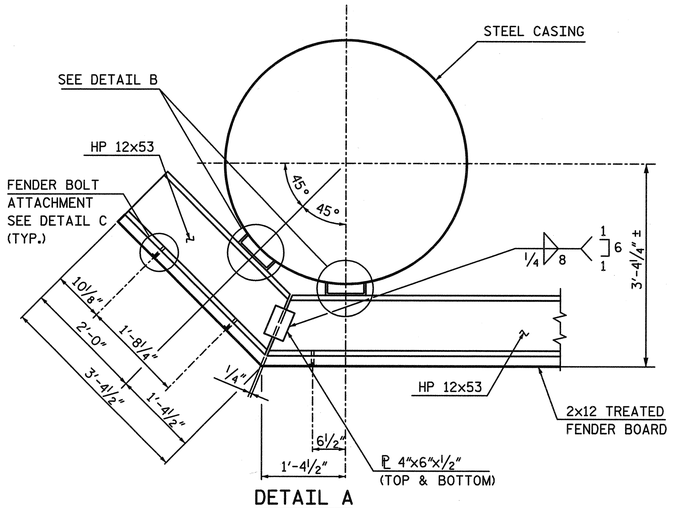

DETAIL A

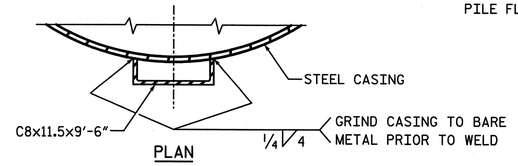

PLAN

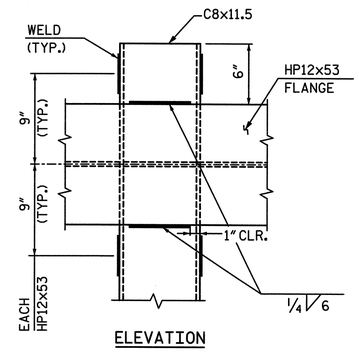

ELEVATION

DETAIL B

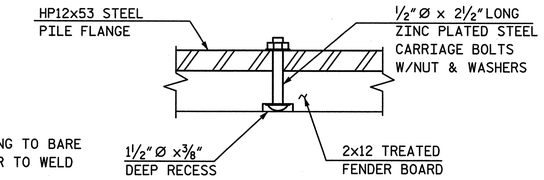

PLAN

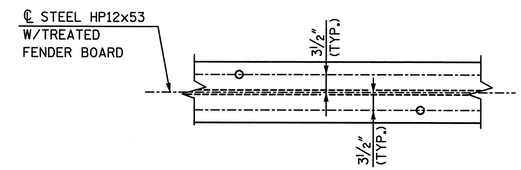

ELEVATION

DETAIL C

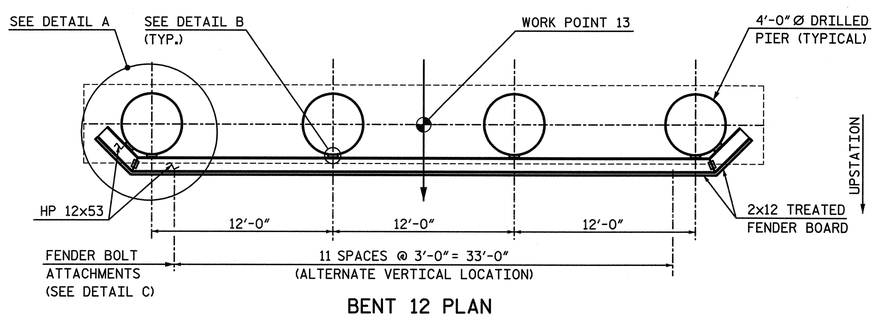

BENT 12 PLAN

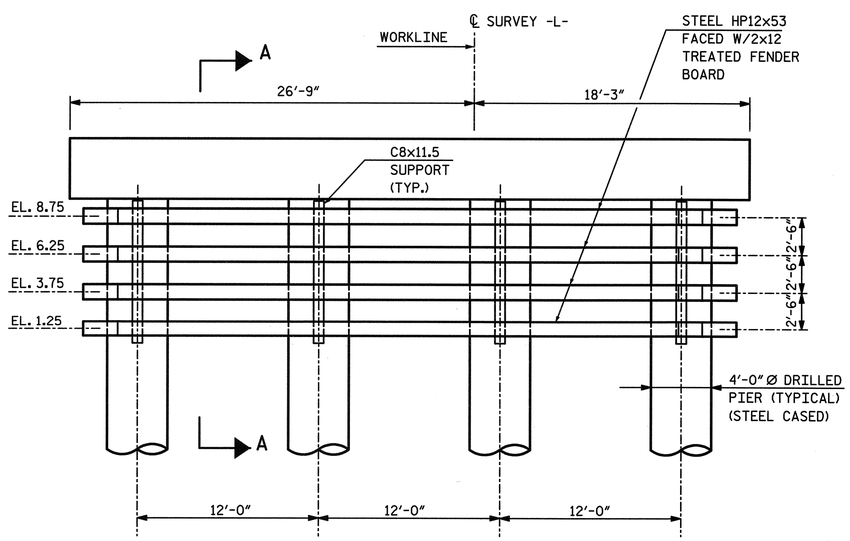

BENT 12 ELEVATION

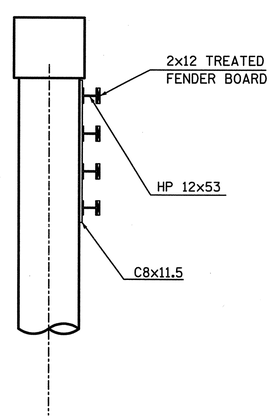

SECTION A-A

NOTES:

THE COST OF THE TEMPORARY FENDER DETAILS SHALL BE CONSIDERED INCIDENTAL TO THE WORK AND INCLUDED IN THE SEVERAL PAY ITEMS FOR THE BRIDGE.

THE HP12x53 AND C8x11.5 STEEL SHAPES AND STEEL PLATES SHALL BE AASHTO M270 GRADE 36.

TREATED LUMBER FOR FENDER SYSTEM SHALL BE IN ACCORDANCE WITH SECTION 1082 OF THE STANDARD SPECIFICATIONS. THE REQUIRED CCA RETENTION SHALL BE 0.04 pcf.

CARRIAGE BOLTS SHALL CONFORM TO ANSI/ASME STANDARD B18.2.1 AND SHALL BE ZINC PLATED.

PROJECT NO. B-2532

CRAVEN COUNTY

STATION: 31+21.29 -L-

NORTH CAROLINA PROFESSIONAL SEAL 12916 ENGINEER PAUL J. BARBER 8/9/06

STATE OF NORTH CAROLINA
DEPARTMENT OF TRANSPORTATION
RALEIGH, NC

BASCULE PIER
TEMPORARY FENDER SYSTEM
ALFRED CUNNINGHAM BRIDGE
OVER THE TRENT RIVER

HNTB NORTH CAROLINA, P.C.
343 E. Six Forks Rd., Suite 200, Raleigh, N.C. 27609

DRAWN BY J. BAYNE DATE 8/06
CHECKED BY D. HAWKINS DATE 8/06

DWG. NO. B153

REVISIONS						SHEET NO.
NO.	BY	DATE	NO.	BY	DATE	S-174
1			3			TOTAL SHEETS
2			4			248

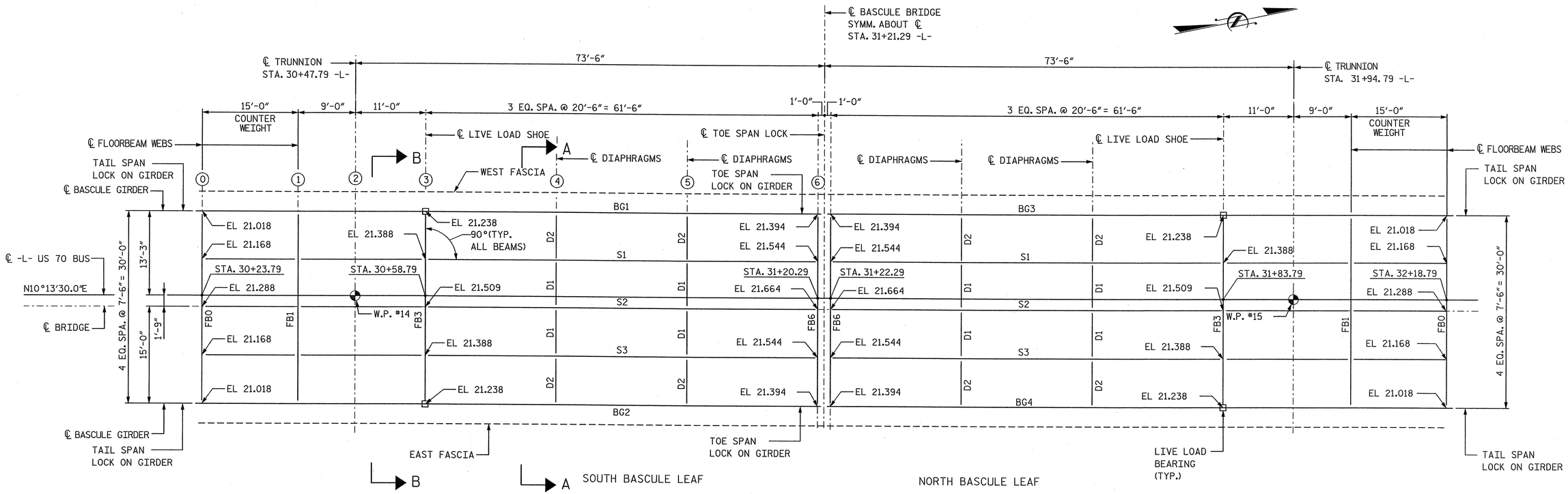

BASCULE SPAN "N" - FRAMING PLAN

STRUCTURAL STEEL NOTES:

1. ALL STRUCTURAL STEEL SHALL BE AASHTO M270 GRADE 50 AND PAINTED IN ACCORDANCE WITH SYSTEM 1 OF ARTICLE 442-7 OF THE STANDARD SPECIFICATIONS UNLESS OTHERWISE NOTED ON THE PLANS.

2. CHARPY V-NOTCH TESTS ARE REQUIRED FOR ALL TOP AND BOTTOM FLANGE PLATES, AND ALL WEB PLATES DENOTED WITH A (T) EXCEPT AS NOTED, AND ALL SPLICE PLATES. IF A PERMITTED SHOP FLANGE SPLICE IS NOT USED, CHARPY V-NOTCH TESTS WILL BE REQUIRED FOR THE ENTIRE FLANGE PLATE. FOR CHARPY V-NOTCH TESTS, SEE ARTICLE 1072-9 OF THE STANDARD SPECIFICATIONS.

3. ALL BOLTS SHALL BE 7/8" DIAMETER, AASHTO M164 (ASTM A325), IN 15/16" DIAMETER HOLES EXCEPT AS NOTED OTHERWISE. CONTACT SURFACES SHALL BE CLASS A EXCEPT FOR STRINGER MOMENT CONNECTIONS @ PP3 AND FOR FLOORBEAM FB3 SHEAR CONNECTION TO BASCULE GIRDER BG1 & BG2 AND LIVE LOAD SHOE CONNECTION PLATE TO BASCULE GIRDER SHALL HAVE A CLASS B CONTACT SURFACE.

4. TENSION ON THE AASHTO M164 BOLTS SHALL BE CALIBRATED USING DIRECT TENSION INDICATOR WASHERS IN ACCORDANCE WITH ARTICLE 440-8 OF THE STANDARD SPECIFICATIONS.

5. WELDING SHALL CONFORM TO THE ANSI/AASHTO/AWS BRIDGE WELDING CODE D1.5 WITH NCDOT AMENDMENTS. WELDING AND NONDESTRUCTIVE TESTING SYMBOLS SHALL CONFORM TO SYMBOLS FOR WELDING, BRAZING AND NONDESTRUCTIVE EXAMINATION AWS A2.4-86.

6. JOINT WELDING PROCEDURES, OVERALL FABRICATION METHODS, AND QUALITY CONTROL INSPECTION PROCEDURE SHALL BE INCLUDED AS WRITTEN PROCEDURE SPECIFICATIONS WITH THE SHOP PLAN SUBMISSION.

7. SHOP SPLICES ARE PERMITTED TO LIMIT THE MAXIMUM REQUIRED FLANGE PIECE LENGTHS TO 60 FEET AND WEB PIECE LENGTHS TO 45 FEET. PERMITTED FLANGE AND WEB SHOP SPLICES SHALL NOT BE LOCATED WITHIN 15 FEET OF MAXIMUM DEAD LOAD DEFLECTION (NOR WITHIN 15 FEET OF TRUNNION BEARING). KEEP 2 FEET MINIMUM BETWEEN WEB AND FLANGE SHOP SPLICES. KEEP 6" MINIMUM BETWEEN CONNECTOR PLATE OR TRANSVERSE STIFFENER WELDS AND WEB OR FLANGE SHOP SPLICES.

8. WHEN FLANGES OR WEBS ARE DETAILED ON THE CONTRACT PLANS AS A SERIES OF VARYING THICKNESS PLATES, THE CONTRACTOR MAY, FOR THE PURPOSE OF ELIMINATING BUTT WELDS, EXTEND THE LENGTH OF THE THICKER PLATE TO THE END OF THE NEXT THINNER PLATE OR TO THE END OF THE MEMBER IF APPROVED BY THE ENGINEER. THE MAXIMUM THICKNESS TRANSITION AT ANY JOINT SHOULD NOT EXCEED A RATIO OF 1 TO 1½. IF THE CONTRACTOR INCREASES THE THICKNESS OF THE BOTTOM FLANGE PLATE AT A BEARING LOCATION, HE SHALL MAINTAIN THE ORIGINAL GIRDER ELEVATION BY MAKING SUITABLE CHANGES IN THE ELEVATION OF THE CONCRETE MASONRY.

9. ALLOWANCES SHALL BE MADE IN THE SHOP FOR SHRINKAGE DUE TO WELDING AND BURNING. IF UNEVEN SHRINKAGE IS ANTICIPATED, CAMBER ORDINATES SHALL BE ADJUSTED ACCORDINGLY.

10. FLANGE AND WEB SHOP SPLICES ARE TO BE COMPLETED AND WELDMENTS INSPECTED BEFORE FITTING AND WELDING FLANGES TO WEBS. FABRICATION METHODS WHICH MAY BE REQUIRED FOR SPECIAL CONDITIONS SHALL BE INCLUDED IN THE WRITTEN WELDING AND PROCEDURE SPECIFICATIONS OF THE SHOP PLANS.

11. ALL DIMENSIONS SHOWN ON THE PLANS ARE HORIZONTAL OR VERTICAL UNLESS OTHERWISE SHOWN OR NOTED. DIMENSIONS ARE SHOWN AT NORMAL TEMPERATURE OF 60°F UNLESS OTHERWISE NOTED.

12. NO WELDING OF FORMS OR FALSEWORK TO TOP FLANGES WILL BE PERMITTED.

13. STUDS ON GIRDERS MAY BE SHIFTED UP TO 1" IF NECESSARY TO CLEAR FLANGE SPLICE WELD.

NOTES:

1. ELEVATIONS SHOWN ON FRAMING PLAN ARE GIVEN AT CENTERLINE OF BEARING AND CENTERLINE OF FLOORBEAM AT TOP OF BEAM, WITH THE SPAN CLOSED.

2. ELEVATIONS SHOWN AT CENTERLINE OF BASCULE GIRDER ARE THEORETICAL TOP OF FLOORBEAM ELEVATIONS.

3. FB1 IS SET LEVEL WITH FBO.

4. FOR SECTIONS A-A AND B-B, SEE DWG. B155.

PROJECT NO. B-2532
CRAVEN COUNTY
STATION: 31+21.29 -L-

NORTH CAROLINA PROFESSIONAL SEAL 12916 ENGINEER PAUL J. BARBER 12/7/06

STATE OF NORTH CAROLINA
DEPARTMENT OF TRANSPORTATION
RALEIGH, NC

BASCULE SPAN "N"
FRAMING PLAN

HNTB
HNTB NORTH CAROLINA, P.C.
343 E. Six Forks Rd., Suite 200, Raleigh, N.C. 27609

DRAWN BY SPL DATE 10/06
CHECKED BY SL DATE 10/06
DWG. NO. B154

REVISIONS						SHEET NO.
NO.	BY	DATE	NO.	BY	DATE	S-175
1			3			TOTAL SHEETS
2			4			348

slam
ATT NYOD111
B-2532C-00073 36-18
P:\nadd\428973 Alfred Cunningham\DGN\100% Submission\B2532_SD_B154_FramingPlan.dgn

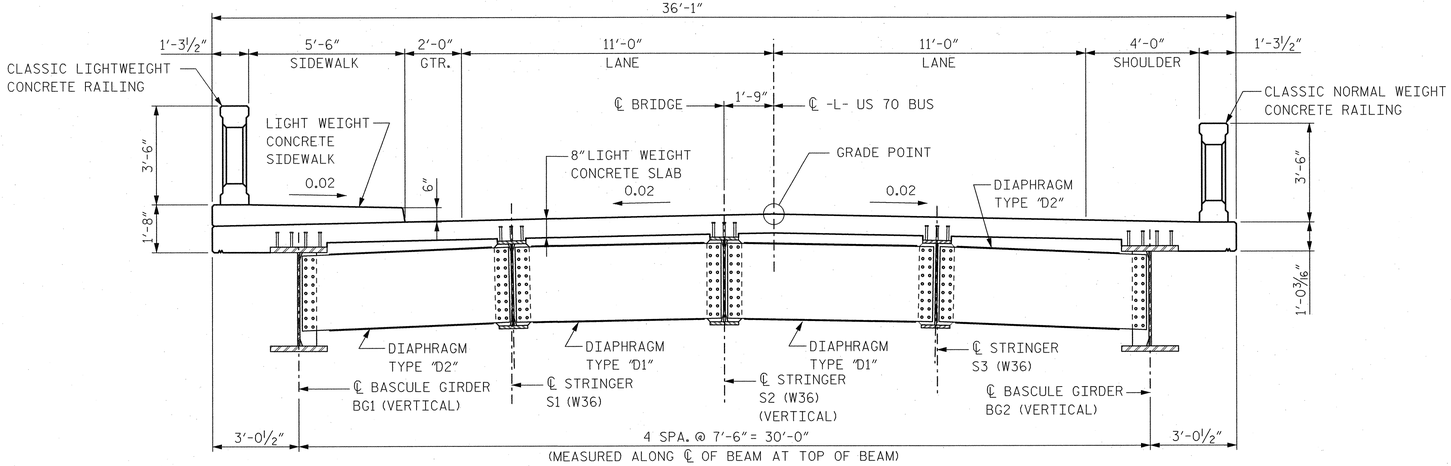

TYPICAL CROSS SECTION A-A

BASCULE SPAN "N" COMPOSITE DECK ON STEEL GIRDERS AT DIAPHRAGM
(LOOKING UPSTATION)

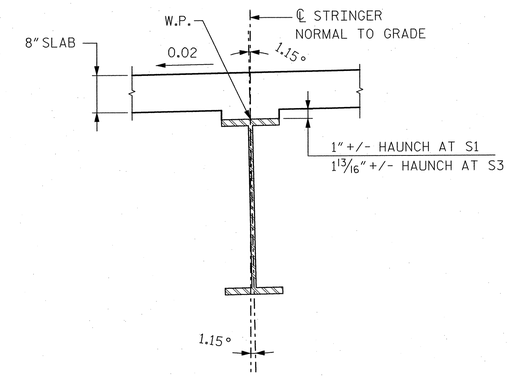

TYPICAL DETAIL

STRINGER

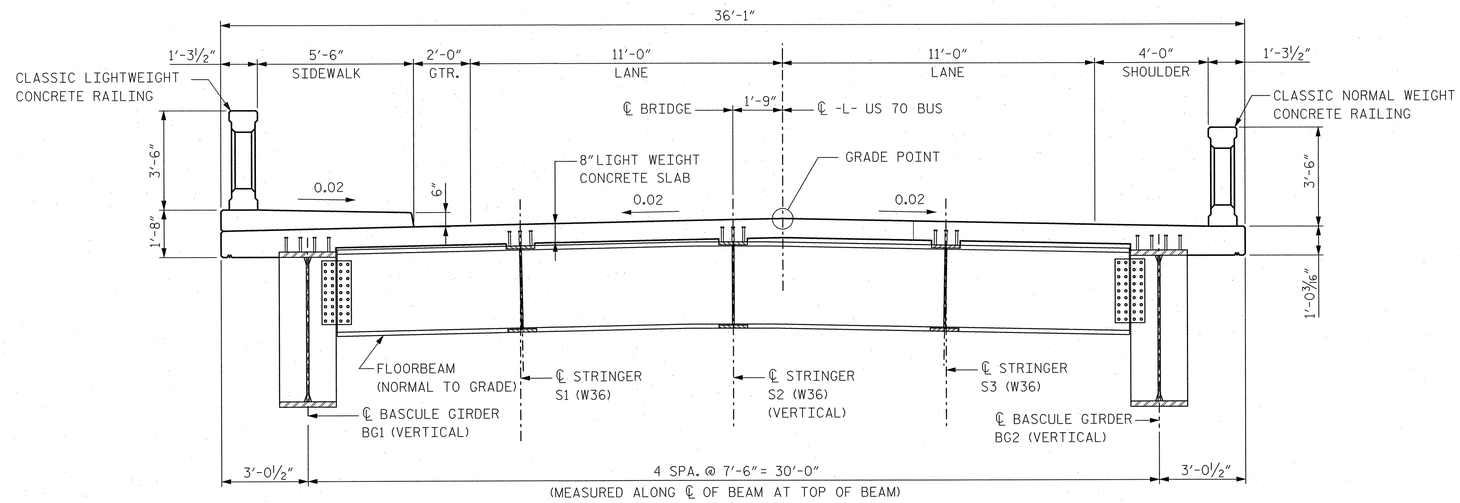

TYPICAL CROSS SECTION B-B

BASCULE SPAN "N" COMPOSITE DECK ON STEEL GIRDERS AT FLOORBEAM
(LOOKING UPSTATION)

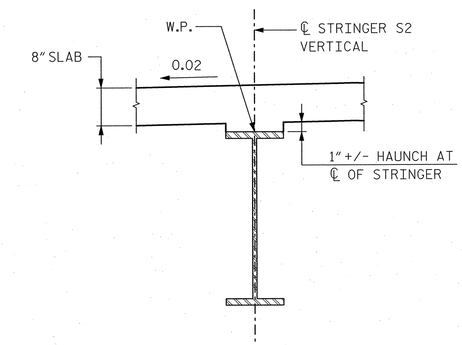

TYPICAL DETAIL

STRINGER S2

NOTES:

1. STRINGERS S1 AND S3 ARE SET PERPENDICULAR TO THE 0.02 CROSS SLOPE. STRINGERS S2 AND BASCULE GIRDERS BG1 & BG2 ARE SET VERTICAL.
2. FOR FRAMING PLAN OF BASCULE SPAN, SEE DWG. B154.
3. FOR LOCATION OF SECTIONS A-A AND B-B, SEE DWG. B154.
4. FOR DIAPHRAGM TYPES "D1" AND "D2" DETAILS, SEE DWG. B176.

NORTH CAROLINA PROFESSIONAL SEAL 12916 ENGINEER PAUL J. BARBER 10/5/06

PROJECT NO. B-2532

CRAVEN COUNTY

STATION: 31+21.29 -L-

STATE OF NORTH CAROLINA
DEPARTMENT OF TRANSPORTATION
RALEIGH, NC

BASCULE SPAN "N"
TYPICAL SECTIONS

HNTB NORTH CAROLINA, P.C.
343 E. Six Forks Rd., Suite 200, Raleigh, N.C. 27609

DRAWN BY JRE DATE 10/06
CHECKED BY SL DATE 10/06

DWG. NO. B155

REVISIONS						SHEET NO.
NO.	BY	DATE	NO.	BY	DATE	S-176
1			3			TOTAL SHEETS
2			4			548

Jello AT NYQUIST
02-OCT-2006 14:25
J:\2006\42873 - Alfred Cunningham\DGN 100% Submission\B2532-SD_B155_typsectlandgn

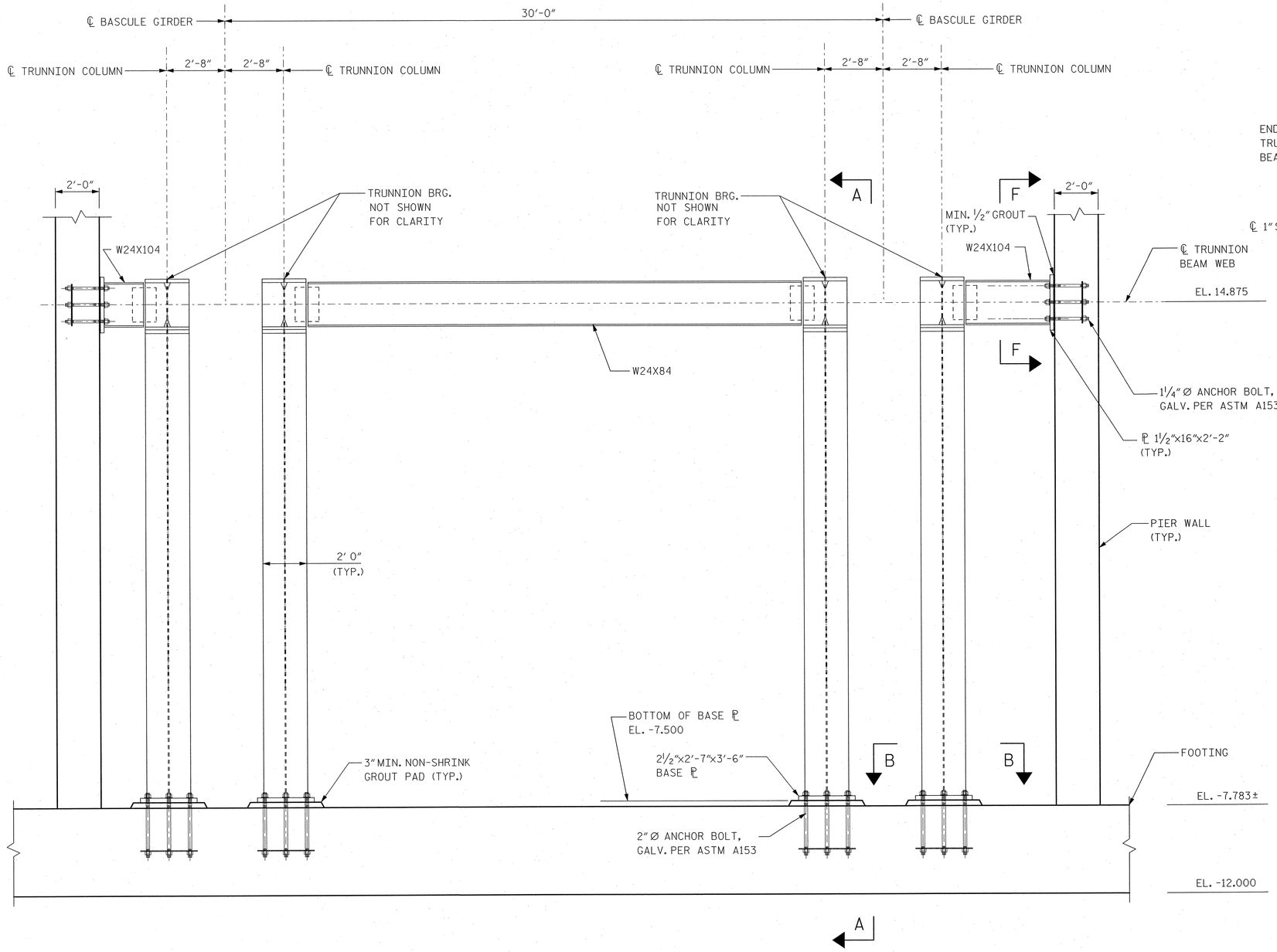

TYPICAL TRUNNION COLUMN ELEVATION

(SOUTH BASCULE SPAN TRUNNION COLUMN SHOWN, NORTH BASCULE SPAN SIMILAR)

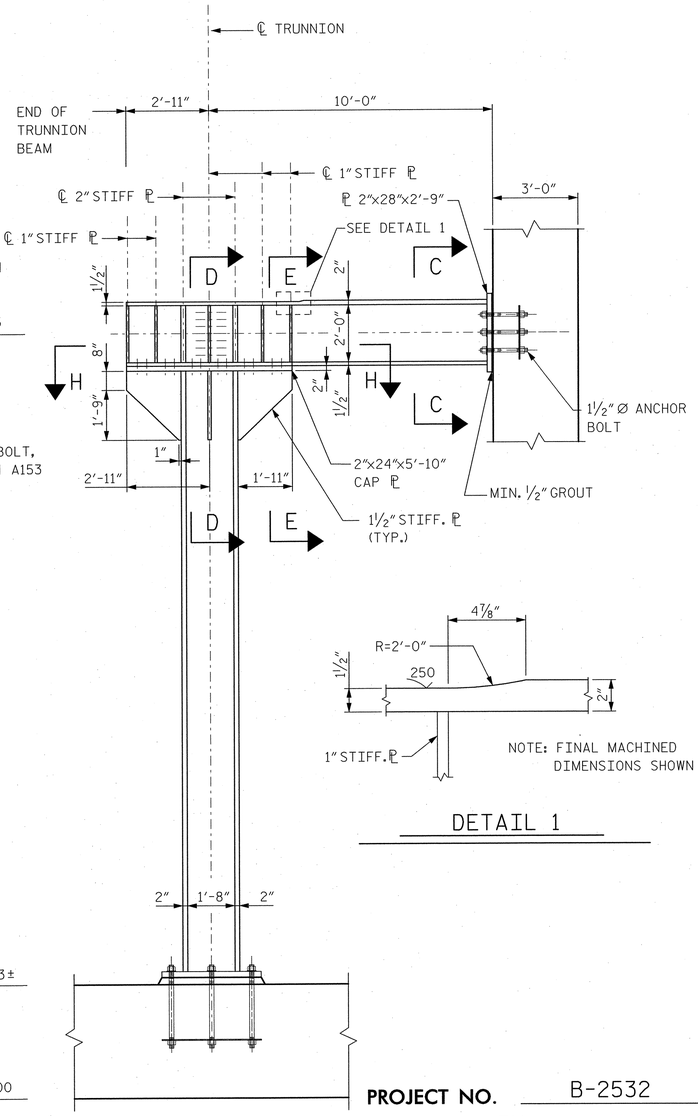

SECTION A-A

DETAIL 1

BILL OF MATERIALS - TRUNNION SUPPORT	
LOCATION	STRUCTURAL STEEL (APPROX. LBS)
PIER 13	80,636
PIER 14	80,636

NOTE: QUANTITIES ARE FOR TRUNNION SUPPORT COLUMNS AND BRACING ONLY.

NOTES:

1. FOR STRUCTURAL STEEL NOTES, SEE DWG. B154.
2. FOR SECTIONS B-B, C-C, D-D, E-E AND F-F, SEE DWG. B157.
3. FOR SECTION H-H, SEE DWG. B158.
4. FOR TRUNNION BEARING DETAILS, SEE DWG. M8.

NORTH CAROLINA PROFESSIONAL SEAL 12916 ENGINEER PAUL J. BARBER 10/3/06

HNTB NORTH CAROLINA, P.C.
343 E. Six Forks Rd., Suite 200, Raleigh, N.C. 27609

DRAWN BY JN DATE 10/06
CHECKED BY SL DATE 10/06

DWG. NO. B156

STATE OF NORTH CAROLINA
DEPARTMENT OF TRANSPORTATION
RALEIGH, NC

BASCULE SPAN "N"
TRUNNION SUPPORT
ELEVATION

REVISIONS						SHEET NO.
NO.	BY	DATE	NO.	BY	DATE	S-177
1			3			TOTAL SHEETS
2			4			348

PROJECT NO. B-2532
CRAVEN COUNTY
STATION: 31+21.29 -L-

jello AT NYDOT2
02-OCT-2006 14:36
J:\0060142813 - Alfred Cunningham\CGN\100% Submission\B2532_SD_B156_trunnionelev.dgn

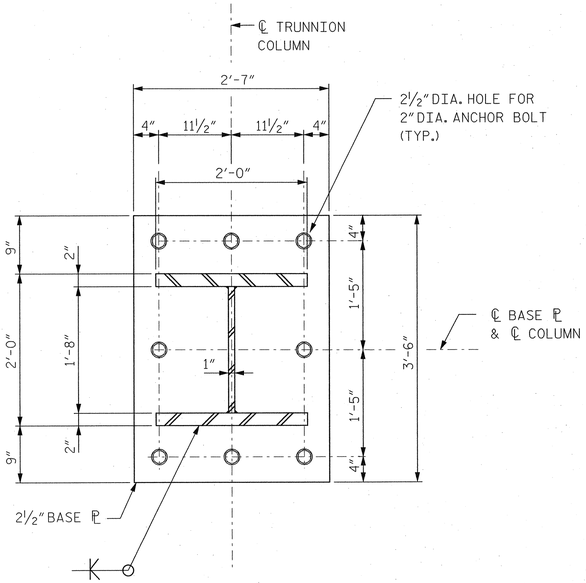

SECTION B-B

BASE PLATE DETAIL

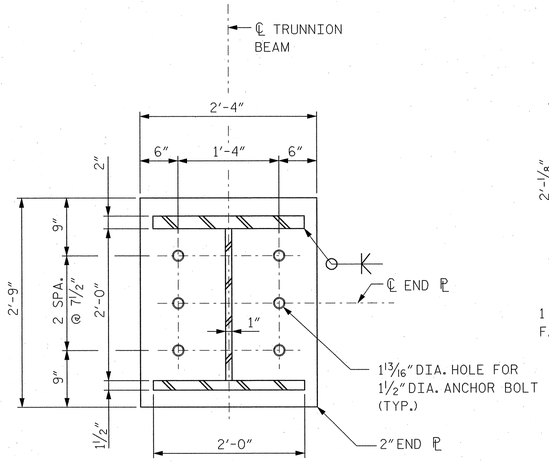

SECTION C-C

END PLATE DETAIL

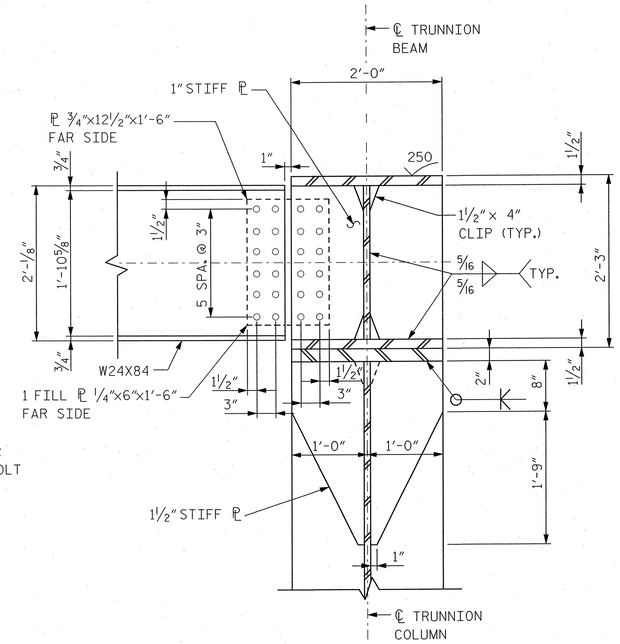

SECTION D-D

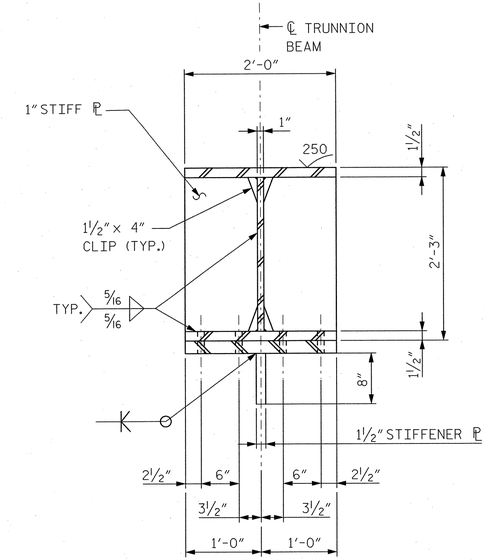

SECTION E-E

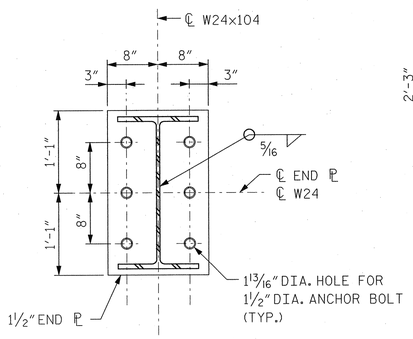

SECTION F-F

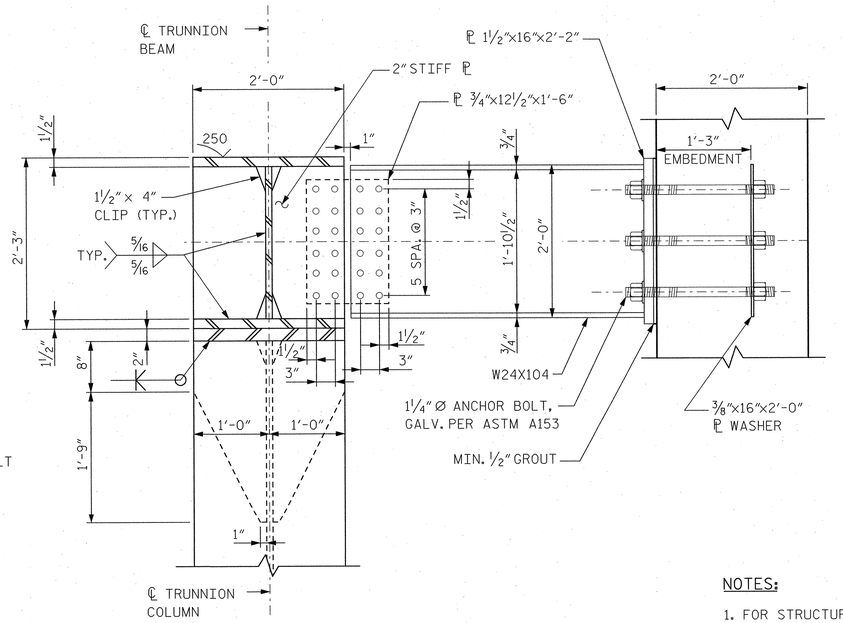

SECTION G-G

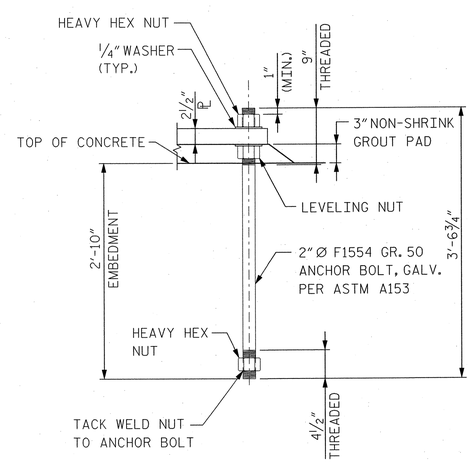

2" DIA. ANCHOR BOLT DETAIL

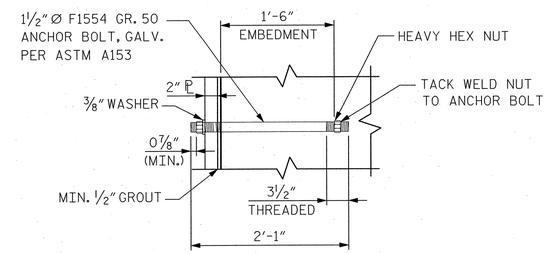

1½" DIA. ANCHOR BOLT DETAIL

PROJECT NO. B-2532

CRAVEN **COUNTY**

STATION: 31+21.29 -L-

NOTES:

1. FOR STRUCTURAL STEEL NOTES, SEE DWG. B154.
2. FOR LOCATION OF SECTIONS B-B, C-C, D-D, E-E AND F-F, SEE DWG. B156.
3. FOR LOCATION OF SECTION G-G, SEE DWG. B158.
4. FOR TYPICAL STIFFENER WELDING DETAIL, SEE DWG. B176.

NORTH CAROLINA PROFESSIONAL ENGINEER SEAL 12916 PAUL J. BARBER

STATE OF NORTH CAROLINA
DEPARTMENT OF TRANSPORTATION
RALEIGH, NC

BASCULE SPAN "N"
TRUNNION SUPPORT DETAILS

HNTB NORTH CAROLINA, P.C.
343 E. Six Forks Rd., Suite 200, Raleigh, N.C. 27609

DRAWN BY JN DATE 10/06
CHECKED BY SL DATE 10/06

DWG. NO. **B157**

REVISIONS						SHEET NO.
NO.	BY	DATE	NO.	BY	DATE	S-178
1			3			TOTAL SHEETS
2			4			348

fatto AT NYDOT72
02-OCT-2006 14:26
J:\0606428\3 - Alfred Cunningham\DGN\100% Submission\B2532_SD_B157_trunnbsumdgn

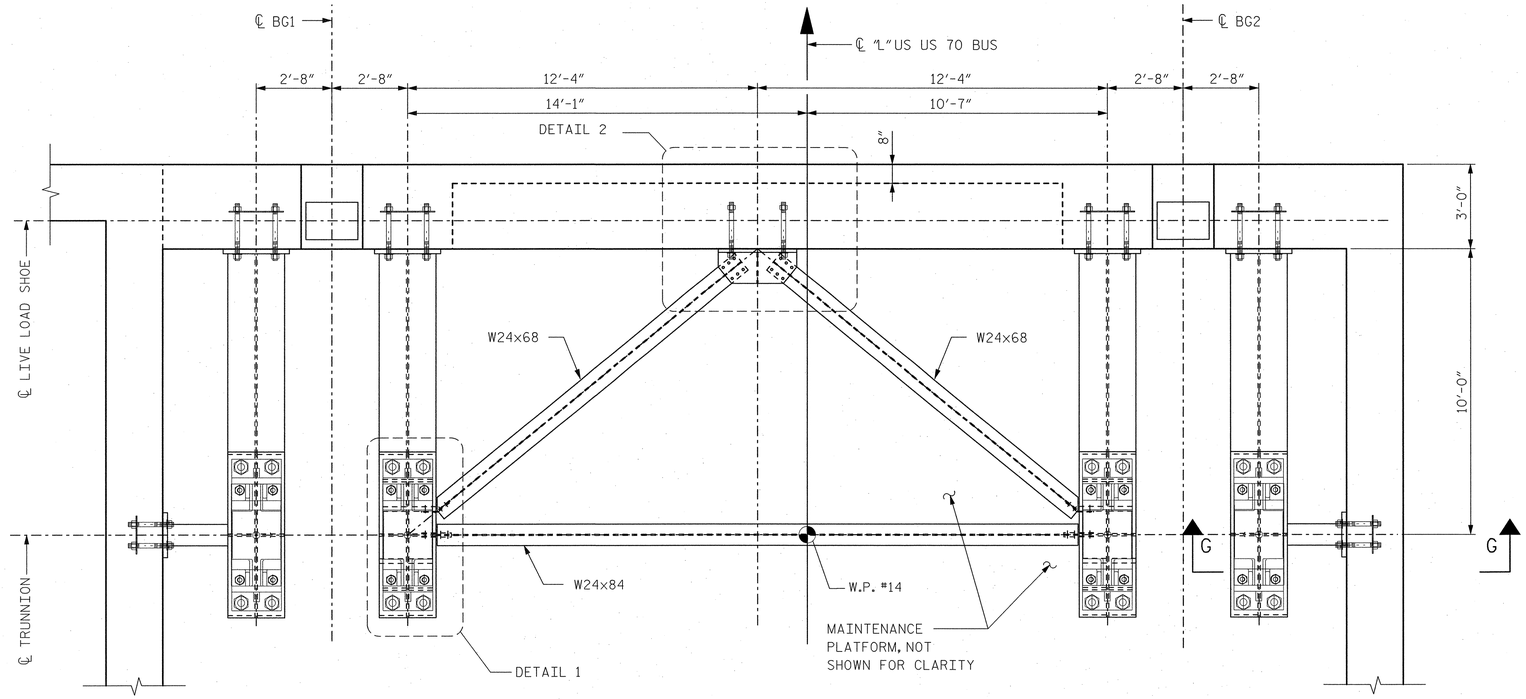

TRUNNION COLUMN BRACING PLAN

(PIER 13 SHOWN, PIER 14 SIMILAR)

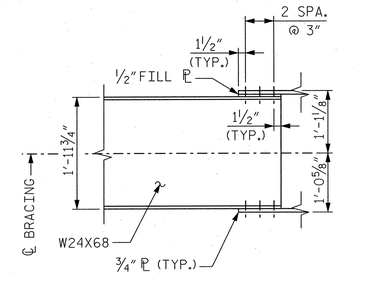

SECTION J-J

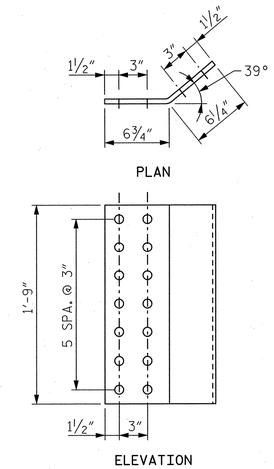

DETAIL 3

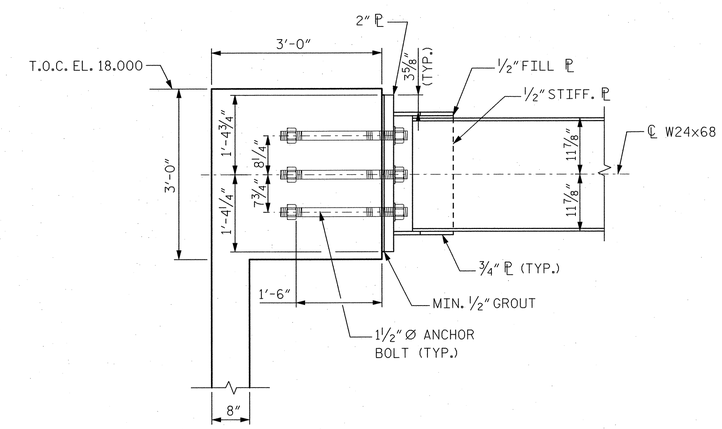

SECTION K-K

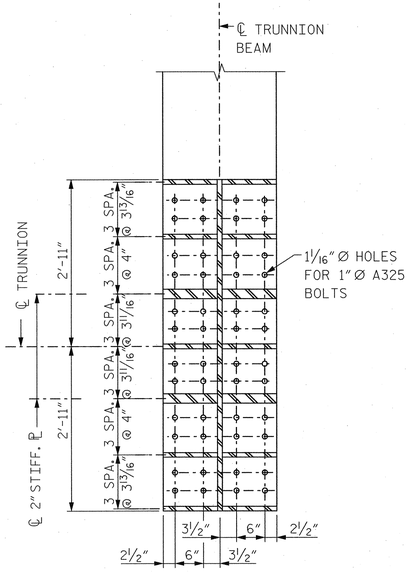

SECTION H-H

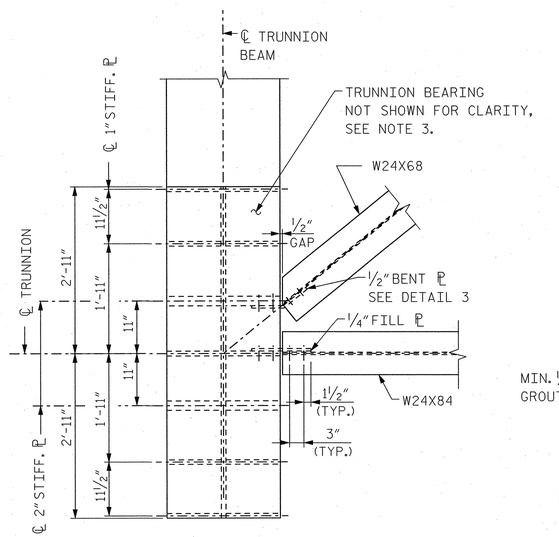

DETAIL 1

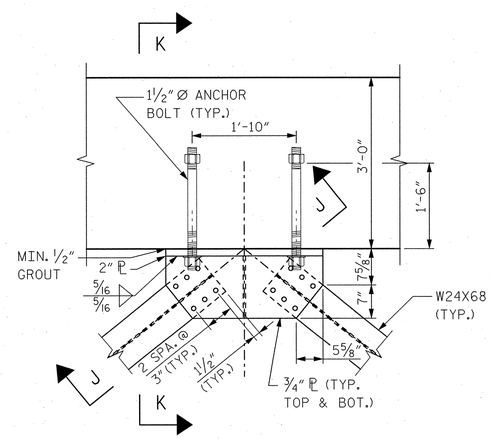

DETAIL 2

NOTES:

1. FOR STRUCTURAL STEEL NOTES, SEE DWG. B154.
2. FOR TRUNNION BEAM CONNECTION DETAILS, SEE DWG. B157.
3. FOR TRUNNION BEARING HOUSING DETAILS, SEE M8.
4. MAINTENANCE PLATFORMS, LADDERS AND RAILING DETAILS, SEE DWGS. B138 AND B139.
5. FOR SECTION G-G, SEE DWG. B157.
6. FOR LOCATION OF SECTION H-H, SEE DWG. B156.

PROJECT NO. B-2532

CRAVEN COUNTY

STATION: 31+21.29 -L-

STATE OF NORTH CAROLINA
DEPARTMENT OF TRANSPORTATION
RALEIGH, NC

BASCULE SPAN "N"
TRUNNION BRACING
DETAILS

NORTH CAROLINA PROFESSIONAL SEAL 12916 ENGINEER PAUL J. BARBER 10/9/06

HNTB NORTH CAROLINA, P.C.
343 E. Six Forks Rd., Suite 200, Raleigh, N.C. 27609

DRAWN BY SPL DATE 10/06
CHECKED BY SL DATE 10/06

DWG. NO. B158

REVISIONS						SHEET NO.
NO.	BY	DATE	NO.	BY	DATE	S-179
1			3			TOTAL SHEETS
2			4			348

file AT N10072
DGN 10-10-2006 15:12
User 42623, Alfred Cunningham\DGN\10072_Submission\B2532_S0_B158_trunnbracing.dgn

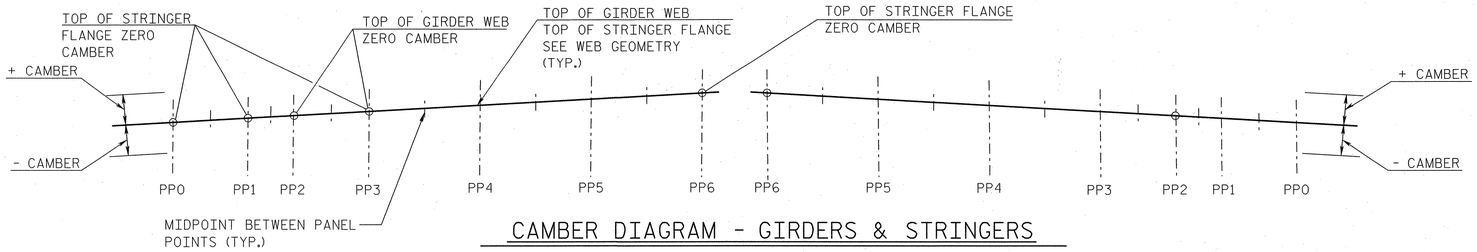

CAMBER DIAGRAM - GIRDERS & STRINGERS

GIRDER AND STRINGER CAMBER TABLE

			PP0	MIDPT	PP1	MIDPT	PP2	MIDPT	PP3	MIDPT	PP4	MIDPT	PP5	MIDPT	PP6
CAMBER (FT.)	BG1	SELFWEIGHT	0.000	0.000	0.000	0.000	0.001	0.001	0.002	0.003	0.004	0.004	0.004	0.002	0.000
		STRUCTURAL STEEL	0.000	0.000	0.000	0.000	0.000	0.000	0.000	0.000	0.000	0.000	0.000	0.000	0.000
		CONCRETE SLAB, SIDEWALK AND CW	0.000	0.001	0.001	0.001	0.002	0.002	0.003	0.005	0.007	0.008	0.007	0.005	0.000
		BDL	-0.029	-0.020	-0.011	-0.005	0.000	0.007	0.014	0.028	0.043	0.060	0.077	0.094	0.112
		TOTAL	-0.029	-0.019	-0.010	-0.004	0.002	0.010	0.018	0.036	0.054	0.072	0.088	0.101	0.112
	BG2	SELFWEIGHT	0.000	0.000	0.000	0.001	0.001	0.001	0.002	0.003	0.004	0.004	0.004	0.002	0.000
		STRUCTURAL STEEL	0.000	0.000	0.000	0.000	0.000	0.000	0.000	0.000	0.000	0.000	0.000	0.000	0.000
		CONCRETE SLAB, SIDEWALK AND CW	0.000	0.001	0.001	0.004	0.001	0.002	0.002	0.004	0.005	0.006	0.005	0.003	0.000
		BDL	-0.031	-0.021	-0.012	-0.005	0.000	0.007	0.015	0.030	0.047	0.065	0.083	0.102	0.121
		TOTAL	-0.031	-0.021	-0.010	0.000	0.002	0.010	0.019	0.037	0.056	0.074	0.092	0.108	0.121
	S1	SELFWEIGHT	0.000	0.000	0.000	0.001	0.002	0.003	0.004	0.009	0.012	0.014	0.013	0.009	0.003
		STRUCTURAL STEEL	0.000	0.000	0.000	0.000	0.000	0.000	0.000	0.000	0.000	0.000	0.000	0.000	0.000
		CONCRETE SLAB, SIDEWALK AND CW	0.003	0.003	0.004	0.005	0.005	0.007	0.010	0.020	0.031	0.037	0.034	0.023	0.006
		BDL	-0.030	-0.020	-0.011	-0.005	0.001	0.008	0.015	0.030	0.045	0.062	0.079	0.096	0.114
		VERTICAL CURVE ORDINATE	0.000	0.000	0.000	0.051	0.060	0.070	0.078	0.085	0.085	0.076	0.059	0.034	0.000
		TOTAL	-0.027	-0.017	-0.007	0.053	0.068	0.088	0.108	0.144	0.174	0.188	0.184	0.161	0.123
	S2	SELFWEIGHT	0.000	0.000	0.000	0.001	0.002	0.004	0.005	0.010	0.014	0.016	0.014	0.010	0.004
		STRUCTURAL STEEL	0.000	0.000	0.000	0.000	0.000	0.000	0.000	0.000	0.000	0.000	0.000	0.000	0.000
		CONCRETE SLAB, SIDEWALK AND CW	0.004	0.004	0.004	0.004	0.007	0.009	0.013	0.024	0.035	0.040	0.037	0.026	0.009
		BDL	-0.030	-0.021	-0.011	-0.005	0.001	0.008	0.016	0.031	0.047	0.063	0.080	0.098	0.116
		VERTICAL CURVE ORDINATE	0.000	0.000	0.000	0.051	0.060	0.070	0.078	0.085	0.085	0.076	0.059	0.034	0.000
		TOTAL	-0.026	-0.016	-0.006	0.051	0.070	0.091	0.112	0.149	0.180	0.195	0.191	0.168	0.129
	S3	SELFWEIGHT	0.000	0.000	0.000	0.000	0.002	0.003	0.004	0.008	0.012	0.014	0.013	0.009	0.003
		STRUCTURAL STEEL	0.000	0.000	0.000	0.000	0.000	0.000	0.000	0.000	0.000	0.000	0.000	0.000	0.000
		CONCRETE SLAB, SIDEWALK AND CW	0.003	0.003	0.004	0.001	0.005	0.007	0.010	0.020	0.031	0.036	0.033	0.023	0.006
		BDL	-0.031	-0.021	-0.011	-0.006	0.001	0.008	0.016	0.031	0.047	0.064	0.082	0.100	0.119
		VERTICAL CURVE ORDINATE	0.000	0.000	0.000	0.051	0.060	0.070	0.078	0.085	0.085	0.076	0.059	0.034	0.000
		TOTAL	-0.028	-0.018	-0.008	0.047	0.067	0.088	0.108	0.144	0.175	0.190	0.187	0.165	0.127

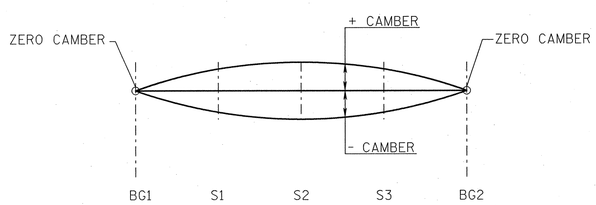

CAMBER DIAGRAM
FLOORBEAMS @ PP0, PP1, PP3 & PP6

FLOORBEAM CAMBER TABLE

			℄ BG1	℄ S1	℄ S2	℄ S3	℄ BG2
CAMBER (FT.)	FB0	SELFWEIGHT	0.000	0.000	0.000	0.000	0.000
		STRUCTURAL STEEL	0.000	0.000	0.000	0.000	0.000
		CONCRETE SLAB, SIDEWALK AND CW	0.000	0.003	0.004	0.003	0.000
		BDL	-0.029	-0.030	-0.030	-0.031	-0.031
		TOTAL	-0.029	-0.027	-0.026	-0.028	-0.031
	FB1	SELFWEIGHT	0.000	0.000	0.000	0.000	0.000
		STRUCTURAL STEEL	0.000	0.000	0.000	0.000	0.000
		CONCRETE SLAB, SIDEWALK AND CW	0.000	0.003	0.004	0.003	0.000
		BDL	-0.011	-0.011	-0.011	-0.011	-0.012
		TOTAL	-0.011	-0.008	-0.007	-0.009	-0.012
	FB3	SELFWEIGHT	0.002	0.004	0.005	0.004	0.002
		STRUCTURAL STEEL	0.000	0.000	0.000	0.000	0.000
		CONCRETE SLAB, SIDEWALK AND CW	0.003	0.010	0.013	0.010	0.002
		BDL	0.014	0.015	0.016	0.016	0.015
		TOTAL	0.018	0.030	0.034	0.030	0.019
	FB6	SELFWEIGHT	0.000	0.003	0.004	0.003	0.000
		STRUCTURAL STEEL	0.000	0.000	0.000	0.000	0.000
		CONCRETE SLAB, SIDEWALK AND CW	0.000	0.006	0.009	0.006	0.000
		BDL	0.112	0.114	0.116	0.119	0.121
		TOTAL	0.112	0.123	0.129	0.127	0.121

CAMBER TABLE NOTES:

1. THE CAMBER LABELED "SELFWEIGHT IN THE TABLE IS THE CAMBER REQUIRED TO OFFSET THE DEFLECTION DUE TO THE DEAD LOAD WEIGHT OF THE MEMBER.
2. THE CAMBER LABELED "STRUCTURAL STEEL" IN THE TABLE IS THE CAMBER REQUIRED TO OFFSET THE DEFLECTION DUE TO THE DEAD LOAD WEIGHT OF THE STEEL, EXCLUDING THE SELFWEIGHT OF THE MEMBERS
3. THE CAMBER LABELED "CONCRETE SLAB AND CW" IN THE TABLE IS THE CAMBER REQUIRED TO OFFSET THE DEFLECTION DUE TO THE DEAD LOAD WEIGHT OF THE CONCRETE SLAB (INCLUDING THE HAUNCHES AND THE COUNTERWEIGHT).
4. THE CAMBER LABELED "BDL" IN THE TABLE IS THE CAMBER REQUIRED TO OFFSET THE DEFLECTION DUE TO SUPERIMPOSED DEAD LOAD WEIGHT OF THE SIDEWALK, CURB AND RAILINGS.
5. POSITIVE CAMBER VALUES DENOTE UPWARD CAMBER. NEGATIVE CAMBER VALUES DENOTE DOWNWARD CAMBER.
6. THE CAMBER ARE TABULATED IN DECIMALS OF A FOOT.
7. THE CAMBER TABLE FOR GIRDERS AND FLOORBEAMS DOES NOT INCLUDE VERTICAL CURVE CAMBER. VERTICAL CURVATURE IS PROVIDED FOR IN THE WEB GEOMETRY.

NOTES:

1. FOR STRUCTURAL STEEL NOTES, SEE DWG. B154.
2. FOR BASCULE GIRDER WEB GEOMETRY, SEE DWG. B164.
3. FOR FLOORBEAM FB3 WEB GEOMETRY, SEE DWG. B168.
4. FOR FLOORBEAM FB6 WEB GEOMETRY, SEE DWG. B169.
5. FOR COUNTERWEIGHT FLOORBEAMS FB0 AND FB1 WEB GEOMETRY, SEE DWGS. B172.

NOTE:
THE CAMBER VALUES SHOWN IN THESE TABLES CORRESPOND TO THE SUGGESTED CONSTRUCTION SEQUENCE DESCRIBED ON DWG. B161. ERECTION SEQUENCE OTHER THAN THAT DESCRIBED ON DWG. B161 MAY REQUIRE RECALCULATION OF THESE CAMBER TABLES.

PROJECT NO. B-2532
CRAVEN COUNTY
STATION: 31+21.29 -L-

NORTH CAROLINA PROFESSIONAL SEAL 12916 ENGINEER PAUL J. BARBER 10/08/06

STATE OF NORTH CAROLINA
DEPARTMENT OF TRANSPORTATION
RALEIGH, NC

BASCULE SPAN "N"
CAMBER TABLES

HNTB NORTH CAROLINA, P.C.
343 E. Six Forks Rd., Suite 200, Raleigh, N.C. 27609

DRAWN BY PE DATE 10/06
CHECKED BY JN DATE 10/06
DWG. NO. B159

REVISIONS						SHEET NO.
NO.	BY	DATE	NO.	BY	DATE	S-180
1			3			TOTAL SHEETS
2			4			348

Jobs AT N100072
DGN/CT_DGN/B2532_B159
J:\Scott\42873 - Alfred Cunningham\DGN 1001 Submission\B2532_S0_B159_Camber.dgn

BALANCE TABLE - SOUTH BASCULE LEAF - SPAN N1

ELEMENTS	WEIGHT (KIPS)	X-ARM TO TRUNNION (FT.)	Mx (KIP-FT.)	Y-ELEV (FT.)	Y-ARM TO TRUNNION (FT.)	My (KIP-FT.)	Z-ARM TO BRIDGE (FT.)	Mz (KIP-FT.)
BASCULE GIRDERS	89.59	31.06	2,782.37	18.18	0.18	15.89	0.03	2.76
TRUNNION SPIDER	4.32	3.52	15.21	16.00	(2.00)	(8.65)	-	-
FLOORBEAM FB6 AT PP6	5.44	72.50	394.57	20.08	2.08	11.32	-	-
FLOORBEAM FB3 AT PP3	9.53	11.00	104.90	20.21	2.21	21.04	-	-
STRINGERS S1 TO S3 FROM PP2 TO PP6	107.25	35.22	3,776.97	20.03	2.03	217.96	0.08	8.96
DIAPHRAGMS	3.05	41.75	127.50	20.17	2.17	6.62	-	-
CONCRETE DECK, LIGHTWEIGHT	230.09	36.76	8,458.30	21.70	3.70	850.33	0.11	25.58
CONCRETE SIDEWALK, LIGHTWEIGHT	34.91	36.59	1,277.23	22.20	4.20	146.44	(14.84)	(518.13)
BRIDGE RAILINGS, LIGHTWEIGHT	39.29	39.18	1,539.21	24.32	6.32	248.26	2.95	115.87
DECK JOINT ARMORING AT PP6	1.21	73.50	88.67	21.85	3.85	4.65	(0.09)	(0.11)
TOE SPAN LOCK	1.64	72.84	119.46	18.00	-	-	-	-
MAINTENANCE PLAYFORM	2.62	66.05	173.15	18.16	0.16	0.41	-	-
LIVE LOAD SHOE	0.76	11.00	8.38	12.13	(5.87)	(4.47)	-	-
PAINT AND BOLTS	1.13	33.67	37.96	19.17	1.17	1.32	0.05	0.06
TOTAL	530.84	35.61	18,903.88	20.85	2.85	1,511.13	(0.688)	(365.01)

BALANCE TABLE - NORTH BASCULE LEAF - SPAN N2

ELEMENTS	WEIGHT (KIPS)	X-ARM TO TRUNNION (FT.)	Mx (KIP-FT.)	Y-ELEV (FT.)	Y-ARM TO TRUNNION (FT.)	My (KIP-FT.)	Z-ARM TO BRIDGE (FT.)	Mz (KIP-FT.)
BASCULE GIRDERS	89.59	31.06	2,782.37	18.18	0.18	15.89	0.03	2.76
TRUNNION SPIDER	4.32	3.52	15.21	16.00	(2.00)	(8.65)	-	-
FLOORBEAM FB6 AT PP6	5.44	72.50	394.57	20.08	2.08	11.32	-	-
FLOORBEAM FB3 AT PP3	9.53	11.00	104.90	20.21	2.21	21.04	-	-
STRINGERS S1 TO S3 FROM PP2 TO PP6	107.25	35.22	3,776.97	20.03	2.03	217.96	0.08	8.96
DIAPHRAGMS	3.05	41.75	127.50	20.17	2.17	6.62	-	-
CONCRETE DECK, LIGHTWEIGHT	230.09	36.76	8,458.30	21.70	3.70	850.33	0.11	25.58
CONCRETE SIDEWALK, LIGHTWEIGHT	34.91	36.59	1,277.23	22.20	4.20	146.44	(14.84)	(518.13)
BRIDGE RAILINGS, LIGHTWEIGHT	42.37	36.75	1,557.27	24.32	6.32	267.76	1.48	62.64
DECK JOINT ARMORING AT PP6	1.21	73.50	88.67	21.85	3.85	4.65	(0.09)	(0.11)
TOE SPAN LOCK	4.88	70.27	342.92	18.00	-	-	-	-
MAINTENANCE PLAYFORM	4.12	66.05	271.94	18.16	0.16	0.65	-	-
LIVE LOAD SHOE	0.76	11.00	8.38	12.13	(5.87)	(4.47)	-	-
PAINT AND BOLTS	1.15	34.38	39.57	19.15	1.15	1.33	0.05	0.06
TOTAL	538.68	35.73	19,245.80	20.84	2.84	1,530.87	(0.776)	(418.24)

BALANCE TABLE - SOUTH BASCULE LEAF - COUNTERWEIGHT

ELEMENTS	CONCRETE DENSITY (PCF)	WEIGHT (KIPS)	X-ARM TO TRUNNION (FT.)	Mx (KIP-FT.)	Y-ELEV (FT.)	Y-ARM TO TRUNNION (FT.)	My (KIP-FT.)	Z-ARM TO BRIDGE (FT.)	Mz (KIP-FT.)
BASCULE GIRDERS		44.26	(12.66)	(560.15)	16.06	(1.94)	(86.03)	0.01	0.49
TRUNNION SPIDER		4.69	(4.62)	(21.67)	16.09	(1.91)	(8.95)	-	-
FLOORBEAM FB0 AT PP0		17.60	(23.97)	(421.87)	16.49	(1.51)	(26.60)	-	-
FLOORBEAM FB1 AT PP1		17.64	(9.03)	(159.25)	17.04	(0.96)	(16.99)	-	-
STRINGERS S1 TO S3 FROM PP0 TO PP2		14.19	(12.08)	(171.40)	19.74	1.74	24.67	0.02	0.34
COUNTERWEIGHT STEEL		174.69	(17.90)	(3,126.32)	15.50	(2.50)	(437.28)	7.27	1,270.65
CONCRETE DECK, LIGHTWEIGHT		67.82	(10.84)	(735.30)	21.54	3.54	239.90	0.24	16.34
CONCRETE SIDEWALK, NORMAL WEIGHT		11.67	(12.23)	(142.68)	22.28	4.28	49.97	(14.84)	(173.12)
BRIDGE RAILINGS, NORMAL WEIGHT		7.67	(12.25)	(93.93)	24.32	6.32	48.45	17.25	132.27
DECK JOINT ARMORING AT PP0		1.29	(24.50)	(31.63)	21.47	3.47	4.49	(0.09)	(0.11)
TAIL SPAN LOCK		4.68	(21.05)	(98.49)	13.50	(4.50)	(21.06)	-	-
COUNTERWEIGHT CONCRETE	210.00	751.46	(16.55)	(12,438.69)	16.37	(1.63)	(1,226.31)	(0.64)	(479.07)
STYROFOAM BLOCK									
BALANCE BLOCK 3.5% (IN-PLACE)		37.53	(17.66)	(662.74)	17.28	(0.72)	(27.15)	0.60	22.71
PAINT AND BOLTS		0.92	(16.45)	(15.15)	15.97	(2.03)	(1.87)	4.56	4.20
TOTAL		1,156.11	(16.16)	(18,679.26)	16.72	(1.28)	(1,484.78)	0.687	794.69

BALANCE TABLE - NORTH BASCULE LEAF - COUNTERWEIGHT

ELEMENTS	CONCRETE DENSITY (PCF)	WEIGHT (KIPS)	X-ARM TO TRUNNION (FT.)	Mx (KIP-FT.)	Y-ELEV (FT.)	Y-ARM TO TRUNNION (FT.)	My (KIP-FT.)	Z-ARM TO BRIDGE (FT.)	Mz (KIP-FT.)
BASCULE GIRDERS		44.26	(12.66)	(560.15)	16.06	(1.94)	(86.03)	0.01	0.49
TRUNNION SPIDER		4.32	(3.52)	(15.21)	16.00	(2.00)	(8.65)	-	-
FLOORBEAM FB0 AT PP0		17.60	(23.97)	(421.87)	16.49	(1.51)	(26.60)	-	-
FLOORBEAM FB1 AT PP1		17.64	(9.03)	(159.25)	17.04	(0.96)	(16.99)	-	-
STRINGERS S1 TO S3 FROM PP0 TO PP2		14.19	(12.08)	(171.40)	19.74	1.74	24.67	0.02	0.34
COUNTERWEIGHT STEEL		174.69	(17.90)	(3,126.32)	15.50	(2.50)	(437.28)	7.27	1,270.65
CONCRETE DECK, LIGHTWEIGHT		67.82	(10.84)	(735.30)	21.54	3.54	239.90	0.24	16.34
CONCRETE SIDEWALK, NORMAL WEIGHT		11.67	(12.23)	(142.68)	22.28	4.28	49.97	(14.84)	(173.12)
BRIDGE RAILINGS, NORMAL WEIGHT		14.12	(12.25)	(173.03)	24.32	6.32	89.25	1.48	20.88
DECK JOINT ARMORING AT PP0		1.29	(24.50)	(31.63)	21.47	3.47	4.49	(0.09)	(0.11)
TAIL SPAN LOCK		4.68	(21.05)	(98.49)	13.50	(4.50)	(21.06)	-	-
COUNTERWEIGHT CONCRETE	215.00	769.35	(16.55)	(12,734.85)	16.37	(1.63)	(1,255.51)	(0.64)	(490.48)
STYROFOAM BLOCK		-	(23.50)	-	18.15	0.15	-	(9.30)	-
BALANCE BLOCK 3.5% (IN-PLACE)		42.63	(15.82)	(674.42)	17.22	(0.78)	(33.32)	5.58	237.86
PAINT AND BOLTS		0.92	(16.45)	(15.15)	15.97	(2.03)	(1.87)	4.56	4.20
TOTAL		1,185.19	(16.08)	(19,059.76)	16.75	(1.25)	(1,479.03)	0.748	887.06

PROJECT NO. B-2532

CRAVEN **COUNTY**

STATION: 31+21.29 -L-

NOTES:

1. BALANCE TABLE SIGN CONVENTION
   WEIGHT - POSITIVE INDICATING DOWNWARD LOAD
   Mx - POSITIVE INDICATING DOWNWARD LONGITUDINAL MOMENT ON SPANSIDE
   NEGATIVE INDICATING DOWNWARD LONGIT. MOMENT ON COUNTERWGT SPAN
   My - POSITIVE INDICATING DOWNWARD VERTICAL BALANCE MOMENT WITH CENTER OF GRAVITY ABOVE THE CL OF TRUNNION
   Mz - POSITIVE INDICATING DOWNWARD TRANSVERSE MOMENT ABOUT CL OF BRIDGE (FACING NORTH, CLOCKWISE IS POSITIVE)
   NEGATIVE VALUES INDICATED THUS (XXX)

2. FOR SUGGESTED CONSTRUCTION SEQUENCE, SEE DWG. B162.

3. FOR BALANCE BLOCK DETAILS, SEE DWG. B174.

4. FOR BALANCE BLOCK LAYOUT, SEE DWG. B175

NORTH CAROLINA PROFESSIONAL SEAL 12916 ENGINEER PAUL J. BARBER 10/2/06

STATE OF NORTH CAROLINA
DEPARTMENT OF TRANSPORTATION
RALEIGH, NC

BASCULE SPAN "N"
BALANCE TABLES

HNTB HNTB NORTH CAROLINA, P.C.
343 E. Six Forks Rd., Suite 200, Raleigh, N.C. 27609

DRAWN BY SPL DATE 10/06
CHECKED BY GT DATE 10/06

DWG. NO. **B160**

REVISIONS						SHEET NO.
NO.	BY	DATE	NO.	BY	DATE	S-181
1			3			TOTAL SHEETS
2			4			348

Iteld - AT WIDOTZ
10/2/2006 1:46:
U:\2006\42573_Alfred Cunningham\DGN\1002_Submission\B2532_SD_B160_Balance.dgn

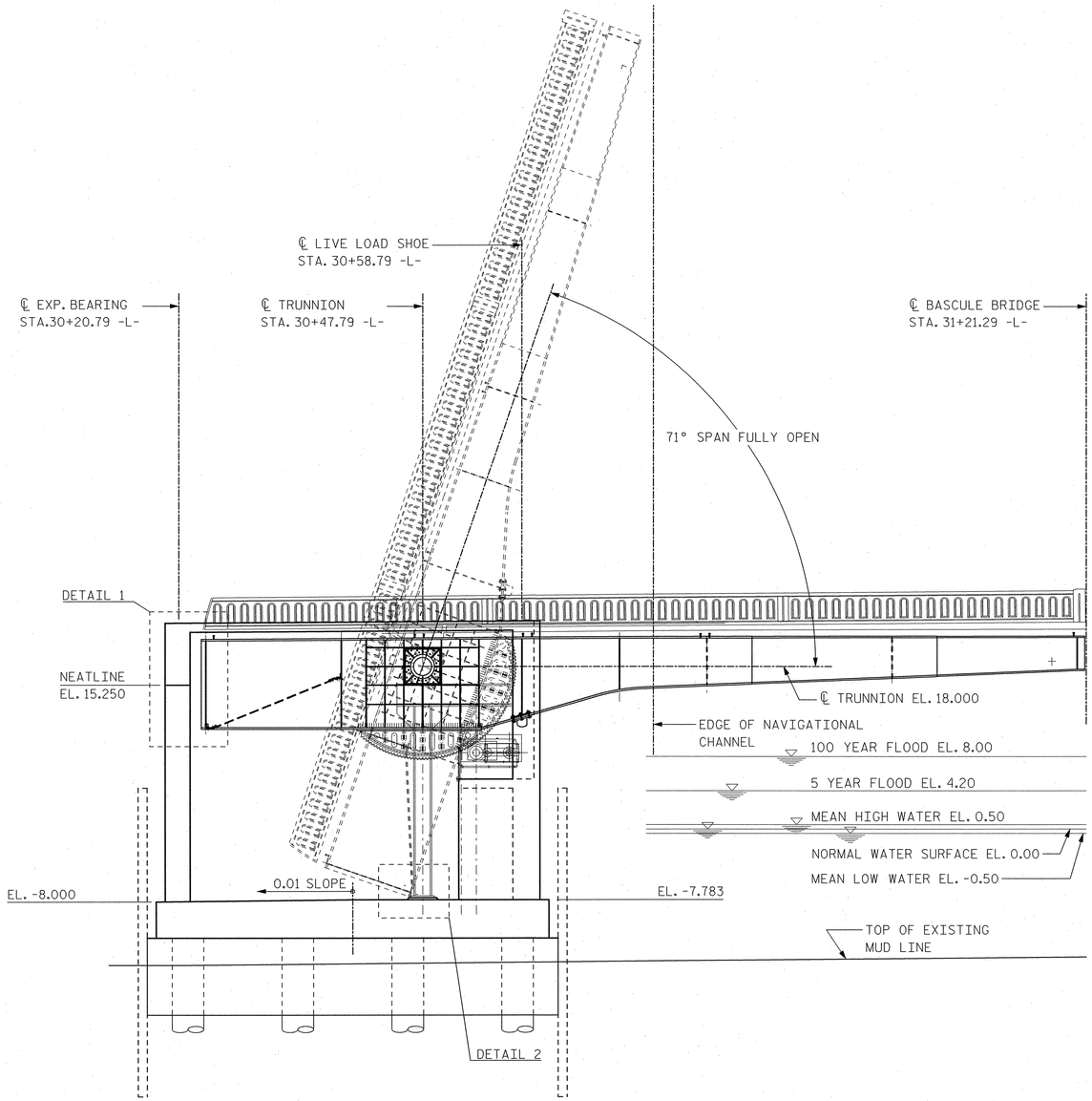

SOUTH BASCULE SPAN - OPENING DIAGRAM

AT PIER 13

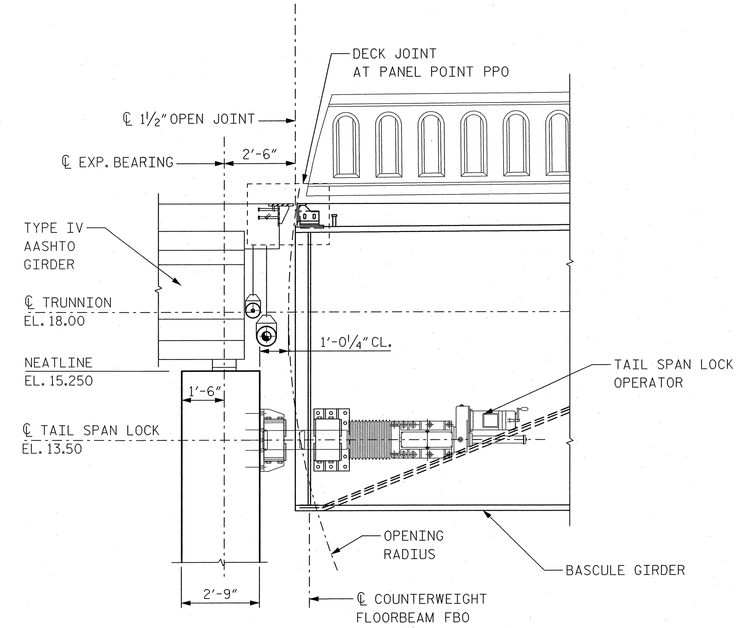

DETAIL 1

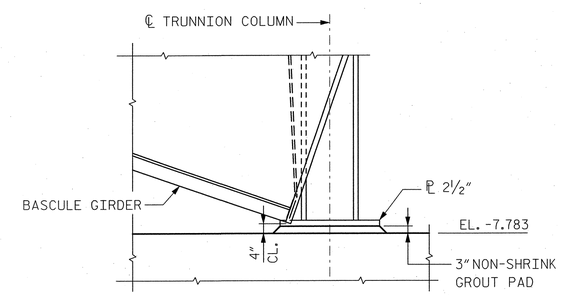

DETAIL 2

PROJECT NO. B-2532

CRAVEN **COUNTY**

STATION: 31+21.29 -L-

NOTES:

1. SOUTH BASCULE SPAN OPENING DIAGRAM SHOWN, NORTH BASCULE SPAN AT PIER 14 SIMILAR.
2. FOR TAIL SPAN LOCK DETAILS, SEE DWGS. B180 AND B181.
3. FOR BASCULE PIER 13 AND 14 FOOTING DETAILS, SEE DWGS. B108 AND B122, RESPECTIVELY.
4. FOR DECK JOINT DETAILS AT PPO, SEE DWG. B177.

NORTH CAROLINA PROFESSIONAL SEAL 12916 ENGINEER PAUL J. BARBER 10/13/06

STATE OF NORTH CAROLINA
DEPARTMENT OF TRANSPORTATION
RALEIGH, NC

BASCULE SPAN "N"
OPENING DIAGRAM

HNTB NORTH CAROLINA, P.C.
343 E. Six Forks Rd., Suite 200, Raleigh, N.C. 27609

DRAWN BY JN DATE 10/06
CHECKED BY SL DATE 10/06

DWG. NO. **B161**

REVISIONS						SHEET NO.
NO.	BY	DATE	NO.	BY	DATE	S-182
1			3			TOTAL SHEETS
2			4			348

/jobs _ AT WYDOT2
/2006-07-06 14:4
J:\odot\42973 - Alfred Cunningham\OSN 10012 Submission\B2532_SD_B161_angdiagram.dgn

SUGGESTED SEQUENCE OF CONSTRUCTION

(BASCULE SPAN SUBSTRUCTURE AND SUPERSTRUCTURE)

1. INSTALL BASCULE PIER COFFERDAMS.
2. INSTALL 3'-6" DIAMETER DRILLED PIERS FOR BASCULE PIER FOUNDATIONS.
3. POUR BASCULE PIER CONCRETE SEALS.
4. POUR BASCULE PIER FOOTINGS.
5. POUR BASCULE PIER CONCRETE WALLS.
6. ERECT TRUNNION SUPPORT COLUMNS AND BEAMS.
7. POUR BASCULE PIER CONCRETE WALLS AND FLOORS TO TRUNNION LEVEL. INSTALL LIVE LOAD SHOE BEARING PADS AND TAIL SPAN LOCK SHOES.
9. INSTALL TEMPORARY BENT ON EXISTING PIVOT PIER.
10. ERECT SOUTH BASCULE LEAF IN CLOSED POSITION.
11. ERECT BASCULE GIRDERS BG1 AND BG2 INCLUDING LIVE LOAD SHOE AT PP3.
12. ERECT FLOORBEAM FB3 AT PP3 WITH PARTIAL CONNECTION AND ENGAGE TAIL SPAN LOCK.
13. ERECT COUNTERWEIGHT FLOORBEAMS FB0 AND FB1.
14. ERECT FLOORBEAM FB6 AT PP6.
15. ERECT STRINGERS S1 THROUGH S3 FROM PP3 TO PP6 AND SPAN SIDE DIAPHRAGMS AT PP4 AND PP5.
16. ERECT STRINGERS S1 THROUGH S3 FROM PP0 TO PP3, COUNTERWEIGHT STEEL INCLUDING CROSS FRAMES, TIE PLATES, BOTTOM PLATE AND PLACING STEEL BALANCING PLATES.
17. MAKE STRINGER MOMENT CONNECTIONS AT PP3 AND COMPLETE CONNECTIONS AT FLOORBEAM FB3.
18. REPEAT STEPS 10 TO 17 FOR NORTH BASCULE LEAF.
19. PLACE LIGHTWEIGHT CONCRETE DECK SLAB ON TOE PORTION OF SPAN (1). FOR LIMITS OF CONCRETE PLACEMENT, SEE DWGS. B185 AND B186.
20. PLACE COUNTERWEIGHT CONCRETE IN LIFTS FOR FULL WIDTH OF COUNTERWEIGHT BOX. SEE COUNTERWEIGHT NOTES ON DWG. B175.
21. PLACE LIGHTWEIGHT CONCRETE DECK SLAB ON TAIL PORTION OF SPAN OVER THE COUNTERWEIGHT (2).
22. PLACE LIGHTWEIGHT CONCRETE DECK SLAB ON REMAINING PORTION OF SPAN (3).
23. PLACE BASCULE PIER AND CONTROL HOUSE CONCRETE WALLS TO ROADWAY LEVEL.
24. PLACE LIGHTWEIGHT CONCRETE FOR SIDEWALK, CURB ON PORTION OF SPAN SIDE. FOR LIMITS OF CONCRETE PLACEMENT, SEE DWG. B185 AND B186.
25. PLACE BALANCE BLOCKS IN COUNTERWEIGHT AS INDICATED ON DWG. B175.
26. PLACE LIGHTWEIGHT CONCRETE FOR SIDEWALK AND CURB ON TAIL PORTION OF SPAN OVER THE COUNTERWEIGHT. FOR LIMITS OF CONCRETE PLACEMENT, SEE DWGS. B185 AND B186.
27. REMOVE TEMPORARY BENT.
28. INSTALL BRIDGE RAILING. PLACE NORMAL CONCRETE FOR EAST SIDE BRIDGE RAILING AND LIGHTWEIGHT CONCRETE FOR WEST SIDE BRIDGE RAILING.
29. ENSURE ALIGNMENT OF BASCULE SPAN. ADJUST SHIMS AT ALL BEARINGS AS REQUIRED.
30. AFTER ALL DEAD LOADS ARE PLACED, INSTALL MECHANICAL SUPPORT BRACKETS AND MAINTENANCE PLATFORMS.
31. COMPLETE CONSTRUCTION OF CONTROL HOUSE.
32. INSTALL TOE SPAN LOCKS AT CENTERSPAN.
33. REMOVE EXISTING PIVOT PIER.

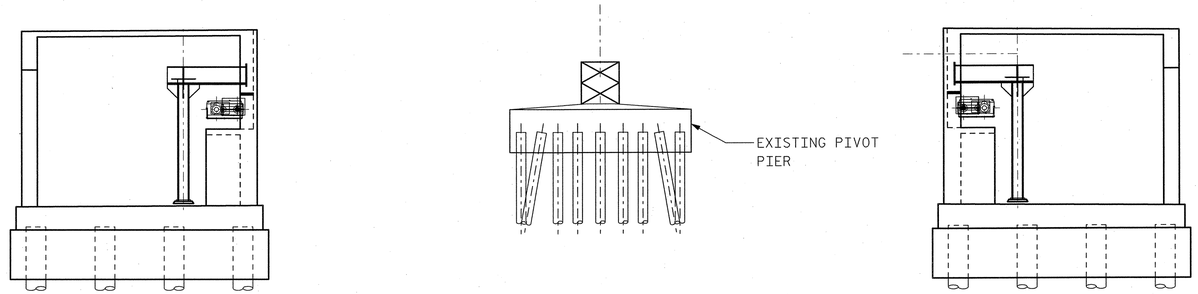

STAGES 1 - 9

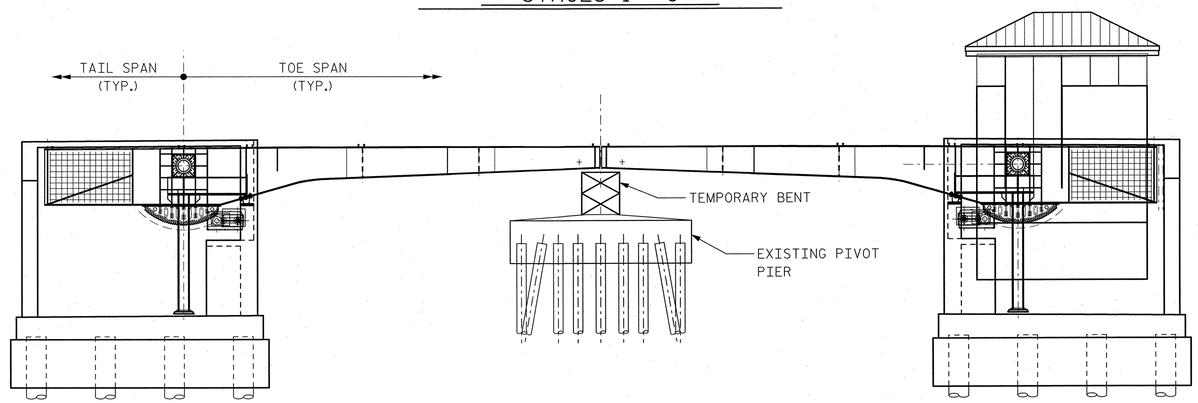

STAGES 10 - 25

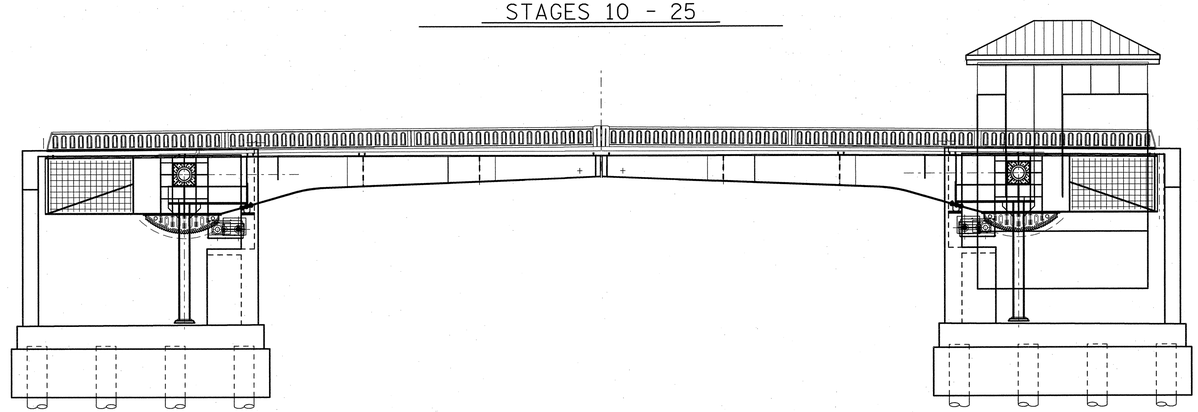

STAGES 26 - 32

PROJECT NO. B-2532

CRAVEN **COUNTY**

STATION: 31+21.29 -L-

NOTES:

1. THE ERECTION SEQUENCE IS SUGGESTED ONLY, THE CONTRACTOR SHALL SUBMIT A PROPOSED PROCEDURE FOR APPROVAL PRIOR TO BEGINNING WORK.

NORTH CAROLINA PROFESSIONAL SEAL 12916 ENGINEER PAUL J. BARBER 10/13/06

HNTB NORTH CAROLINA, P.C.
343 E. Six Forks Rd., Suite 200, Raleigh, N.C. 27609

DRAWN BY SL DATE 10/06
CHECKED BY GT DATE 10/06

DWG. NO. **B162**

STATE OF NORTH CAROLINA
DEPARTMENT OF TRANSPORTATION
RALEIGH, NC

BASCULE SPAN "N"
CONSTRUCTION SEQUENCE

REVISIONS						SHEET NO.
NO.	BY	DATE	NO.	BY	DATE	S-183
1			3			TOTAL SHEETS
2			4			348

field AT NYDOT2
02-OCT-2006 14:37
Useid/Acct: J. Alfred Cunningham/DOA1003; Submission/B2532_SD_B162_ConstrSeqdgn

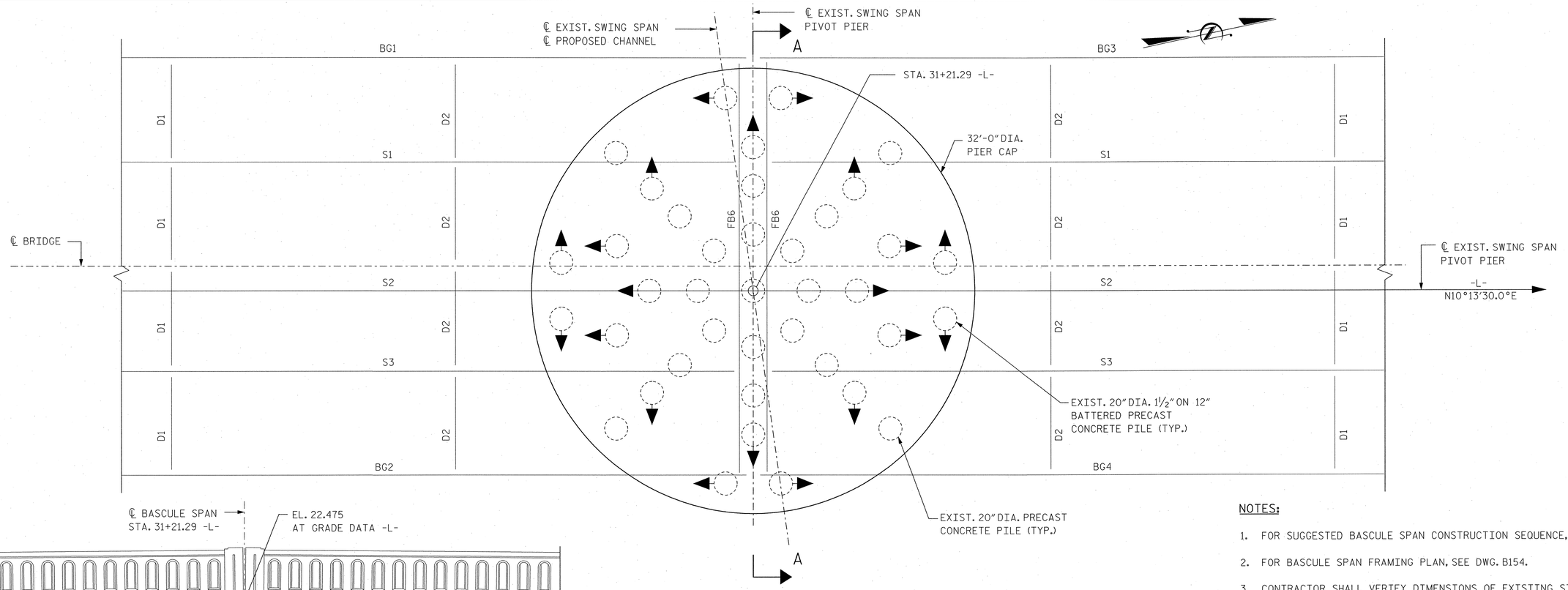

EXISTING PIVOT PIER - PARTIAL PLAN

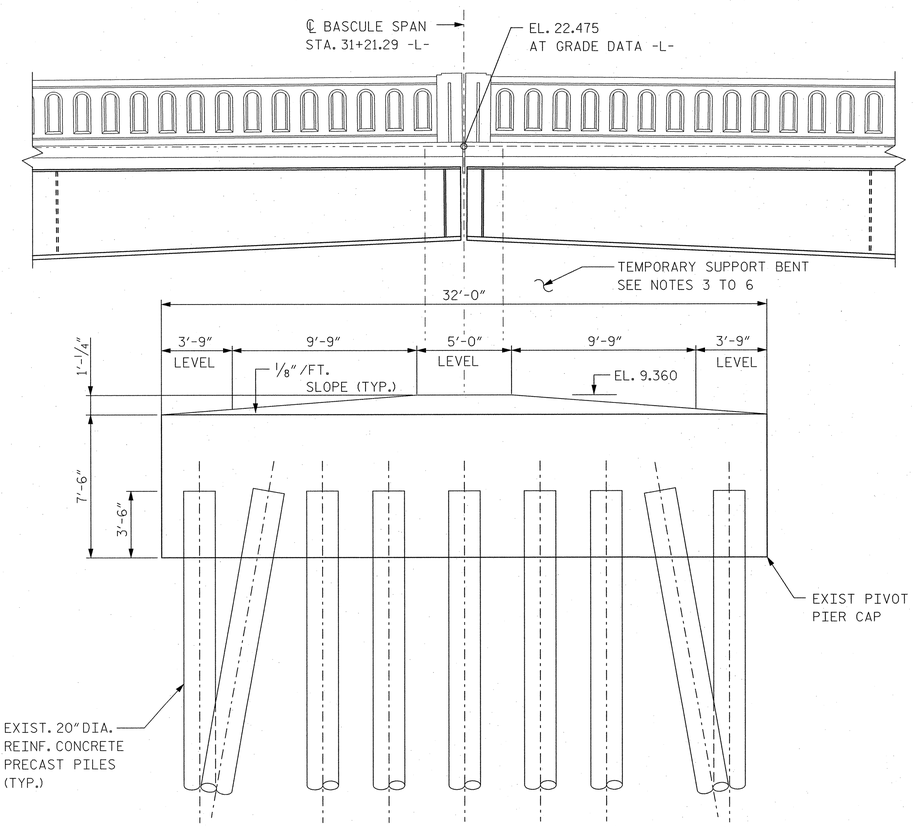

SECTION A-A

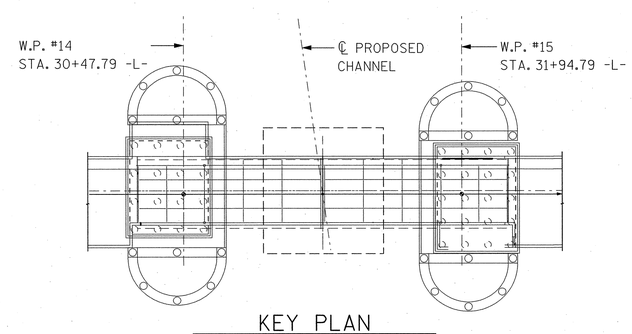

KEY PLAN

N.T.S.

NOTES:

1. FOR SUGGESTED BASCULE SPAN CONSTRUCTION SEQUENCE, SEE DWG. B162.
2. FOR BASCULE SPAN FRAMING PLAN, SEE DWG. B154.
3. CONTRACTOR SHALL VERIFY DIMENSIONS OF EXISTING STRUCTURE BY FIELD SURVEY AND DEVELOP METHOD OF UTILIZING THE EXISTING PIVOT PIER AS A TEMPORARY SUPPORT BENT FOR CONSTRUCTION OF THE BASCULE SPAN.
4. CONTRACTOR SHALL SUBMIT THE TEMPORARY SUPPORT BENT DESIGN AND DETAILS TO THE ENGINEER FOR REVIEW AND APPROVAL.
5. TEMPORARY BENT SHALL PROVIDE SUPPORT AT THE TOE OF EACH BASCULE GIRDER.
6. COSTS FOR TEMPORARY SUPPORT BENT DESIGN, DETAILS, FABRICATION AND INSTALLATION SHALL BE INCLUDED IN SEVERAL PAY ITEMS OF BASCULE SPAN CONSTRUCTION.
7. EXISTING PIVOT PIER SHALL BE DEMOLISHED AFTER CONSTRUCTION OF BASCULE SPAN.
8. COST OF EXISTING PIVOT PIER BE INCLUDED IN PAY ITEM FOR DEMOLITION OF EXISTING BRIDGE.

PROJECT NO. B-2532

CRAVEN **COUNTY**

STATE: 31+21.29 -L-

NORTH CAROLINA PROFESSIONAL ENGINEER SEAL 12916 PAUL J. BARBER 10/5/06

STATE OF NORTH CAROLINA
DEPARTMENT OF TRANSPORTATION
RALEIGH, NC

TEMPORARY SUPPORT BENT FOR BASCULE SPAN "N" CONSTRUCTION

HNTB NORTH CAROLINA, P.C.
343 E. Six Forks Rd., Suite 200, Raleigh, N.C. 27609

DRAWN BY PE DATE 10/06
CHECKED BY SL DATE 10/06

DWG. NO. **B163**

REVISIONS						SHEET NO.
NO.	BY	DATE	NO.	BY	DATE	S-184
1			3			TOTAL SHEETS
2			4			348

/pw/o__AT_NYDOT2
09/06/2006 11:11
J:\odot\HBR3 - Alfred Cunningham\DGN\100X_Submission\B2532_SD_B163_PivotPier.dgn

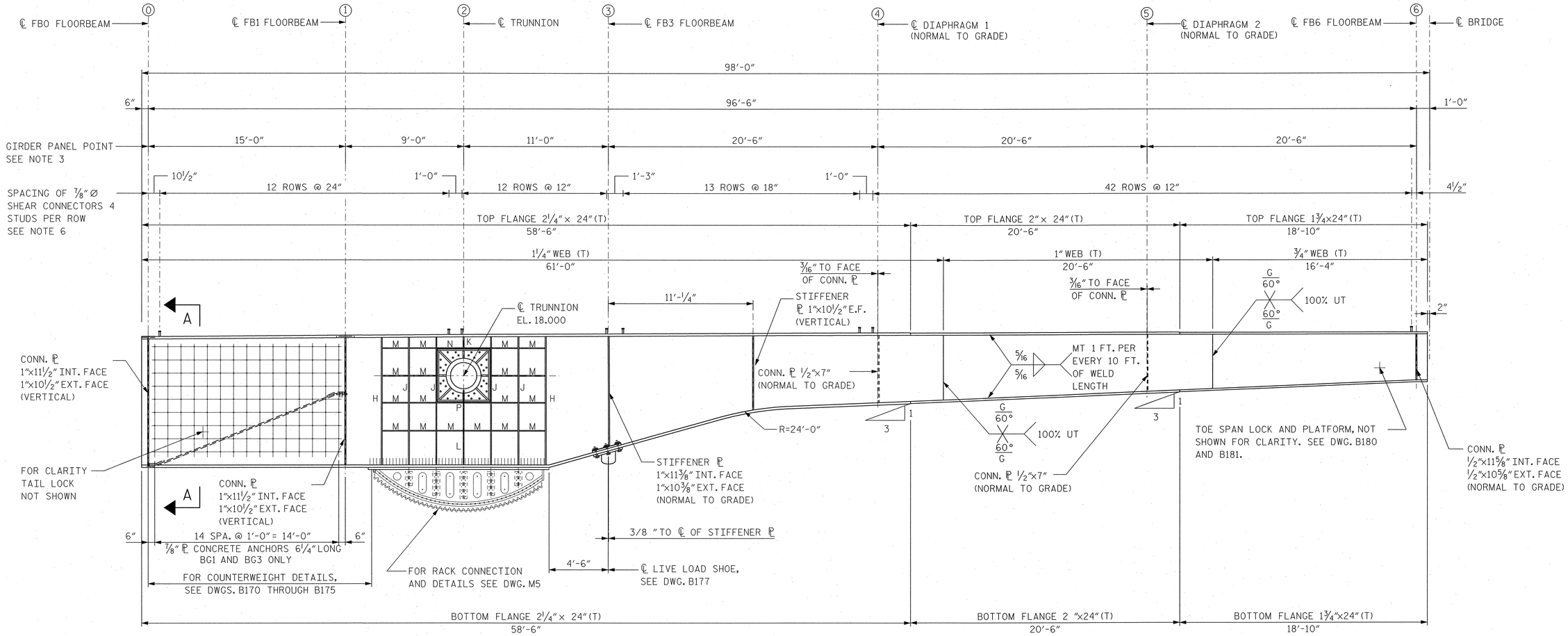

BASCULE GIRDER ELEVATION (BG2 SHOWN)

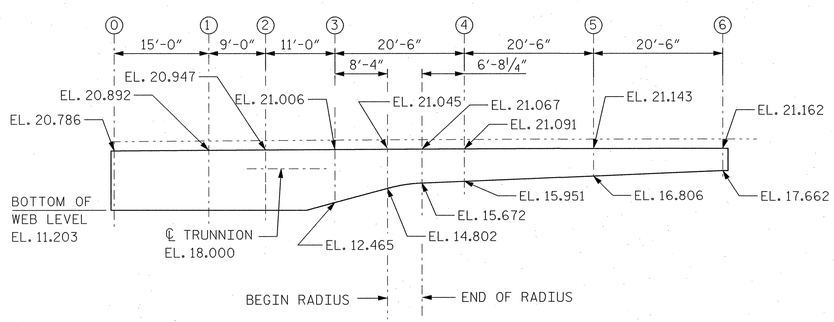

BASCULE GIRDER WEB GEOMETRY

NOTES:

1. FOR STRUCTURAL STEEL NOTES, SEE DWG. B154.
2. GIRDER BG2 SHOWN, GIRDER BG1 SIMILAR.
3. GIRDER PANEL POINTS ARE MEASURED TO THE CENTERLINE OF FLOORBEAM OR DIAPHRAGM WEB, EXCEPT FOR PANEL POINT 2 WHICH IS MEASURED TO THE CENTERLINE OF TRUNNION SPAN CLOSED. GIRDER WEB DEPTHS WHERE INDICATED, ARE MEASURED AT PANEL POINTS, UNLESS OTHERWISE NOTED. SEE GIRDER WEB GEOMETRY.
4. CONNECTION PLATES AND BEARING STIFFENERS SHALL BE TRULY VERTICAL OR NORMAL TO GRADE AS NOTED UNDER FULL DEAD LOAD, WITH SPAN CLOSED.
5. FOR CAMBER TABLE, SEE DWG. B159.
6. FOR SHEAR STUD AND WELDING DETAILS, SEE DWG. B176.
7. THE SPACE BETWEEN THE SPIDER AND THE STIFFENERS SHALL BE SEALED WITH EPOXY RESIN.
8. FOR TOE SPAN LOCK AND PLATFORM DETAILS, SEE DWGS. B180 AND B181.
9. FOR TAIL SPAN LOCK DETAILS, SEE DWG. 179.
10. FOR SECTION A-A, SEE DWG. B165.

BILL OF MATERIALS
BASCULE GIRDERS

LOCATION	STRUCTURAL STEEL (APPROX. LBS)	SHEAR CONNECTORS (UNIT)
SOUTH BASCULE SPAN	124,252	632
NORTH BASCULE SPAN	124,252	632

NOTE: QUANTITIES ARE FOR BASCULE GIRDERS ONLY. RACK AND LIVE LOAD SHOE NOT INCLUDED.

NORTH CAROLINA PROFESSIONAL SEAL 12916 ENGINEER PAUL J. BARBER 10/13/06

PROJECT NO. B-2532
CRAVEN COUNTY
STATION: 31+21.29 -L-

STATE OF NORTH CAROLINA
DEPARTMENT OF TRANSPORTATION
RALEIGH, NC

BASCULE SPAN "N"
BASCULE GIRDER ELEVATION

HNTB NORTH CAROLINA, P.C.
343 E. Six Forks Rd., Suite 200, Raleigh, N.C. 27609

DRAWN BY JRE DATE 10/06
CHECKED BY JN DATE 10/06
DWG. NO. B164

REVISIONS						SHEET NO.
NO.	BY	DATE	NO.	BY	DATE	S-185
1			3			TOTAL SHEETS
2			4			348

jelig AT NYDOT2
10-12-2006 14:33
C:\DOCUMENTS ... Alfred Cunningham\DGN\B2532_SD_B164_GIrderelev.dgn

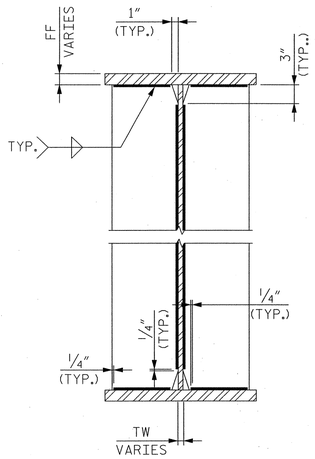

STIFFENER
TYP. WELDING DETAIL

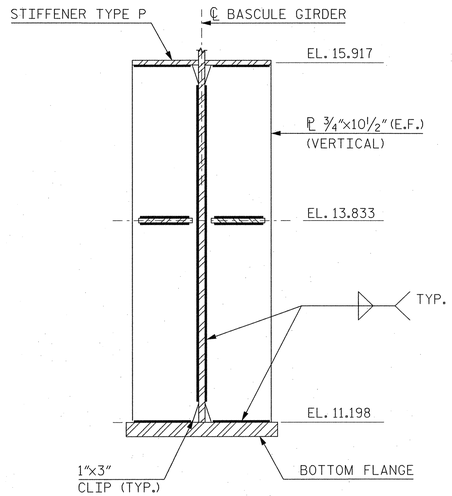

TYPE "L"

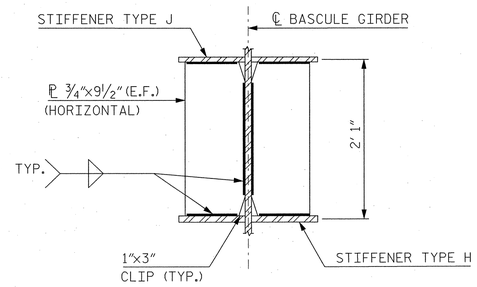

TYPE "M"

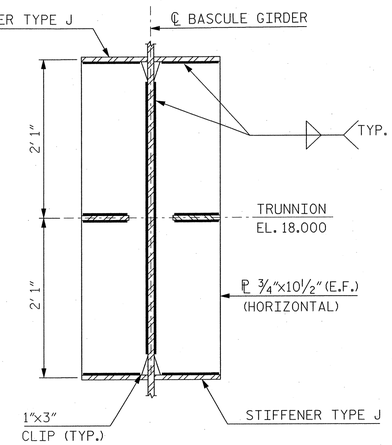

TYPE "N"

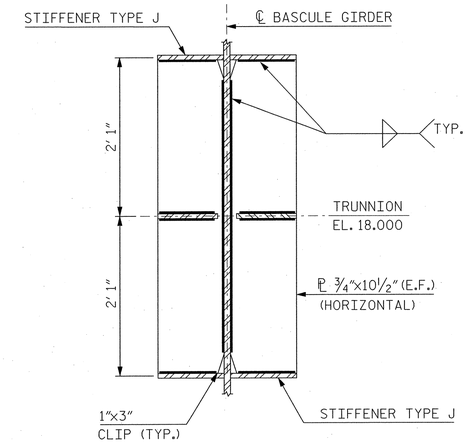

TYPE "P"

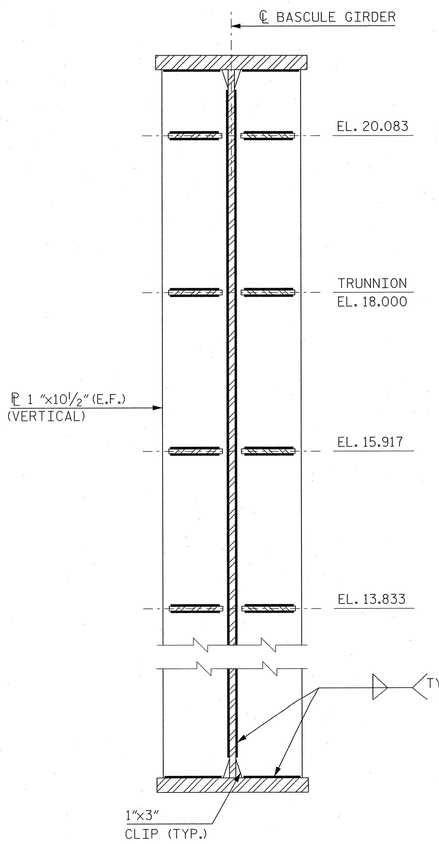

TYPE "H"

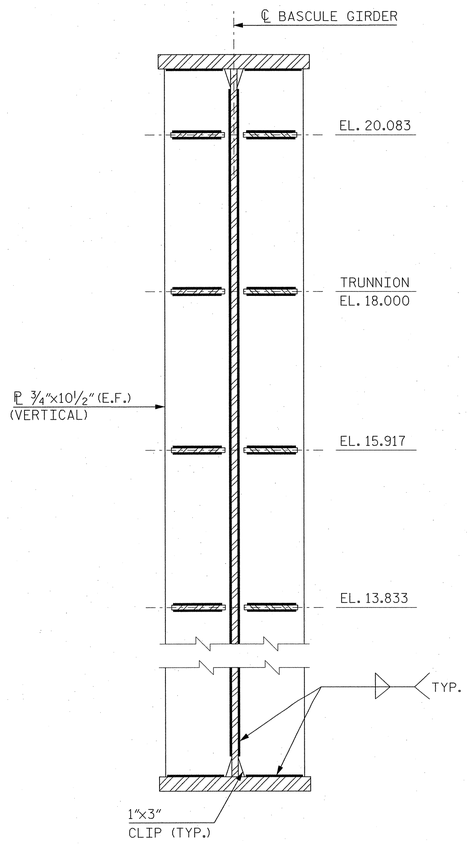

TYPE "J"

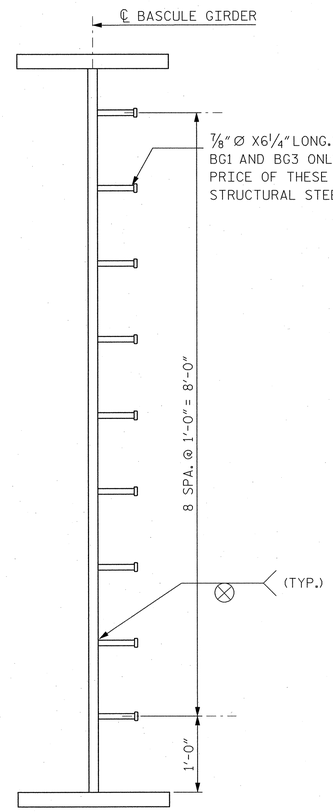

SECTION A-A

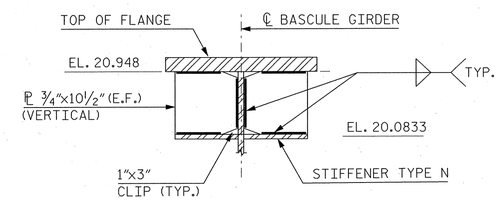

TYPE "K"

NOTES:

1. FOR STRUCTURAL STEEL NOTES, SEE DWG. B154.
2. FOR LOCATION OF 7/8" DIA. x 6 1/4" LONG HEADED STUDS, SEE DWG. B164.
3. FOR LOCATION OF SECTION A-A, SEE DWG. B164.
4. FOR BILL OF MATERIALS OF HEADED STUDS SHOWN IN SECTION A-A, SEE DWG. B174.

NORTH CAROLINA PROFESSIONAL SEAL 12916 ENGINEER PAUL J. BARBER 10/8/06

PROJECT NO. B-2532
CRAVEN COUNTY
STATION: 31+21.29 -L-

STATE OF NORTH CAROLINA
DEPARTMENT OF TRANSPORTATION
RALEIGH, NC

BASCULE SPAN "N"
BASCULE GIRDER DETAILS

HNTB NORTH CAROLINA, P.C.
343 E. Six Forks Rd., Suite 200, Raleigh, N.C. 27609

DRAWN BY PE DATE 10/06
CHECKED BY JN DATE 10/06
DWG. NO. B165

REVISIONS						SHEET NO.
NO.	BY	DATE	NO.	BY	DATE	S-186
1			3			TOTAL SHEETS
2			4			348

jella AT NYD072
02-OCT-2006 14:46
u:\bas\N2532_3 Alfred Cunningham\DGN\1003_Submission\B2532_SD_B165_GirderStiff.dgn

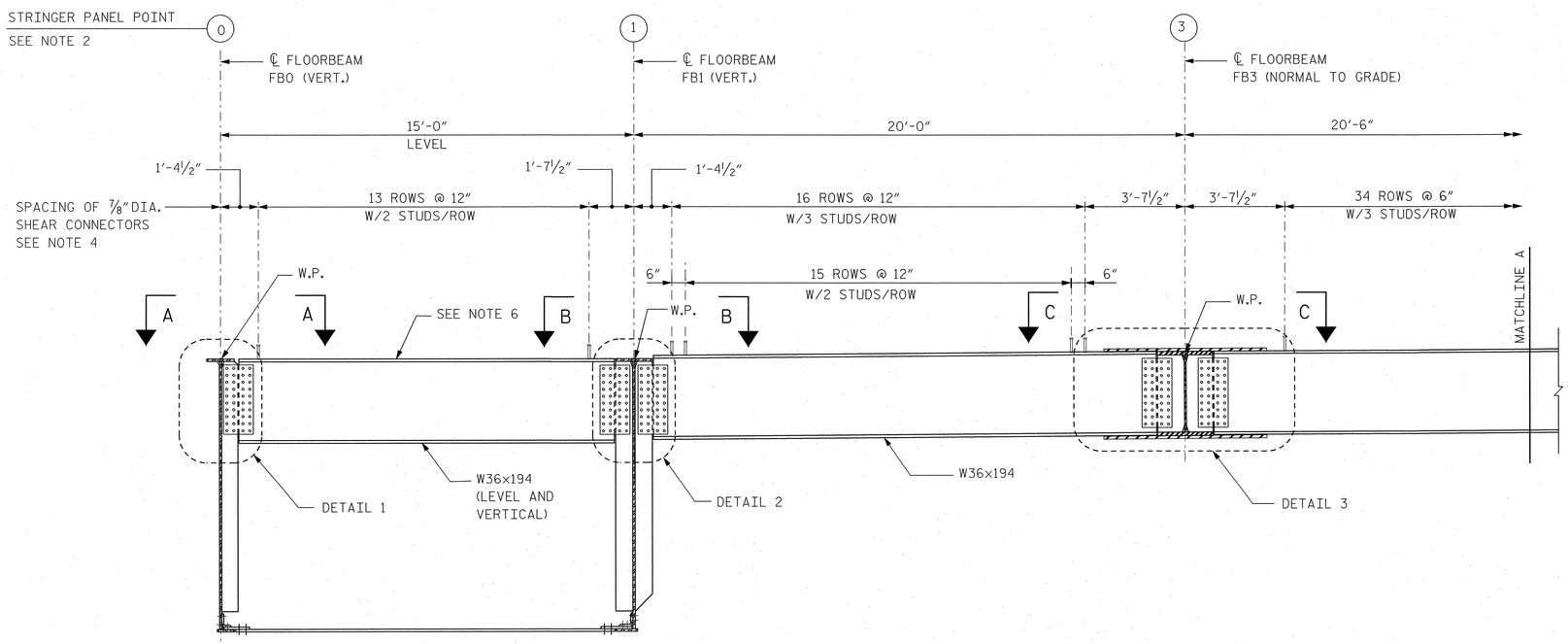

STRINGER S1 THROUGH S3 PARTIAL ELEVATION

TOP FLANGE OF STRINGER ELEVATIONS						
STRINGER	PP0 *	PP1	PP3	PP4	PP5	PP6
S1	21.168	21.274	21.388	21.473	21.525	21.544
S2	21.288	21.395	21.509	21.594	21.645	21.664
S3	21.168	21.274	21.388	21.473	21.525	21.544

NOTE: ELEVATIONS ARE AT ℄ OF WEB AND ℄ OF STRINGER AT TOP OF FLANGE.

* SEE NOTE 5

NOTES:

1. FOR STRUCTURAL STEEL NOTES, SEE DWG. B154.
2. STRINGER PANEL POINTS ARE MEASURED TO THE CENTERLINE OF FLOORBEAM OR DIAPHRAGM WEB.
3. CONNECTION PLATES AND BEARING STIFFENERS SHALL BE TRULY VERTICAL UNDER FULL DEAD LOAD AT STRINGER S3 AND NORMAL TO GRADE WITH THE SPAN CLOSED.
4. FOR SHEAR STUD AND WELDING DETAILS, SEE DWG. B176.
5. STRINGERS BETWEEN PP0 AND PP1 ARE SET VERTICAL AND LEVELED WITH RESPECT TO THE STRINGER TOP FLANGE ELEVATION AT PP0 SET FORTH IN THE TABLE OF FLANGE ELEVATIONS.
6. FOR VIEW A-A, VIEW B-B, VIEW C-C, VIEW D-D AND SECTION E-E, SEE DWG. B167.
7. FOR DETAIL 1, DETAIL 2, DETAIL 3 AND DETAIL 4, SEE DWG. B167.

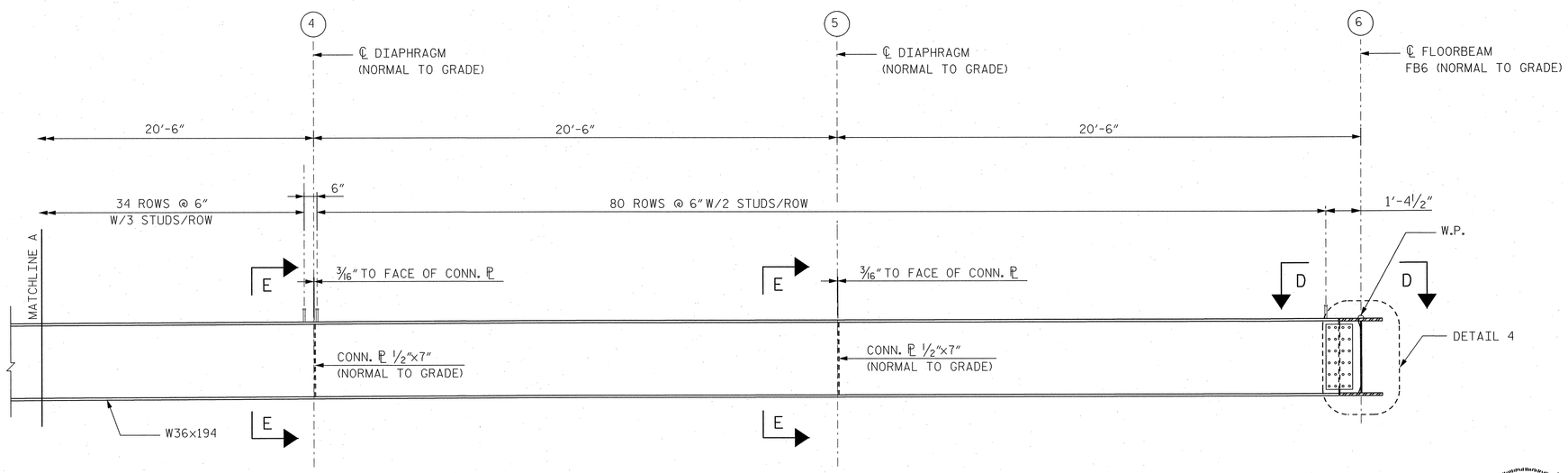

STRINGER S1 THROUGH S3 PARTIAL ELEVATION

BILL OF MATERIALS STRINGERS		
LOCATION	STRUCTURAL STEEL (APPROX. LBS)	SHEAR CONNECTORS (UNIT)
SOUTH BASCULE SPAN	57,446	1,098
NORTH BASCULE SPAN	57,446	1,098

NOTE: QUANTITIES ARE FOR STRINGERS S1 THROUGH S3 ONLY.

PROJECT NO. B-2532

CRAVEN COUNTY

STATION: 31+21.29 -L-

NORTH CAROLINA PROFESSIONAL SEAL 12916 ENGINEER PAUL J. BARBER 10/13/06

STATE OF NORTH CAROLINA
DEPARTMENT OF TRANSPORTATION
RALEIGH, NC

BASCULE SPAN "N"
STRINGER ELEVATION

HNTB NORTH CAROLINA, P.C.
343 E. Six Forks Rd., Suite 200, Raleigh, N.C. 27609

DRAWN BY PE DATE 10/06
CHECKED BY SL DATE 10/06

DWG. NO. B166

REVISIONS						SHEET NO.
NO.	BY	DATE	NO.	BY	DATE	S-187
1			3			TOTAL SHEETS
2			4			348

Julia AT NYDOT2
02-OCT-2006 17:12
User:K0673 - Alfred Cunningham DGN 1001: Submission\B2532_SD_B166_Stringerelev.dgn

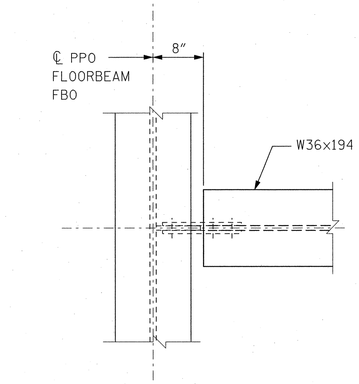

PLAN VIEW A-A

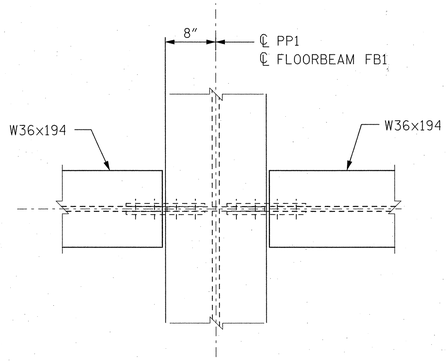

PLAN VIEW B-B

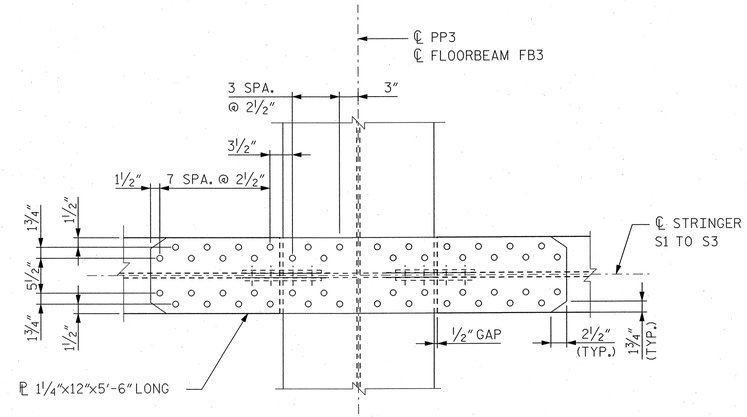

PLAN VIEW C-C

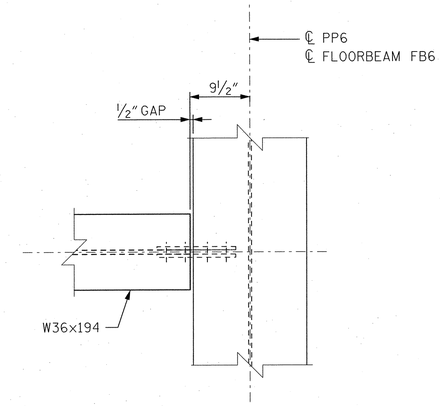

PLAN VIEW D-D

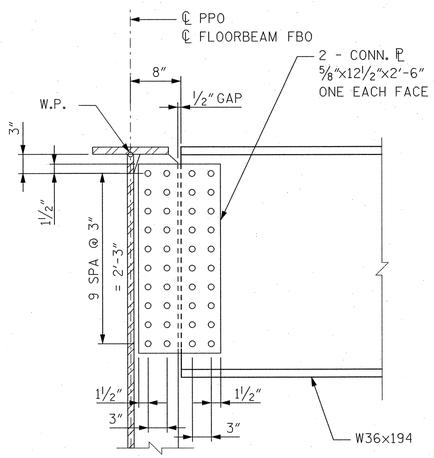

DETAIL 1

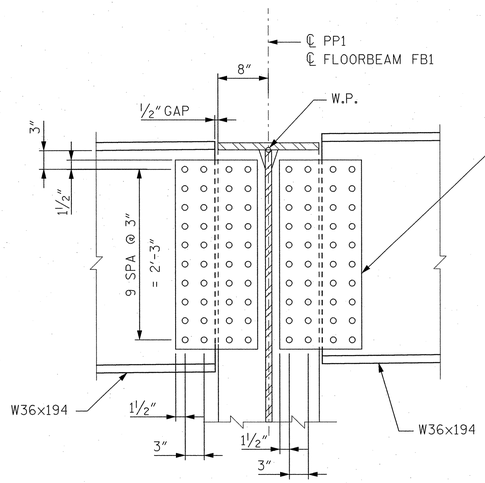

DETAIL 2

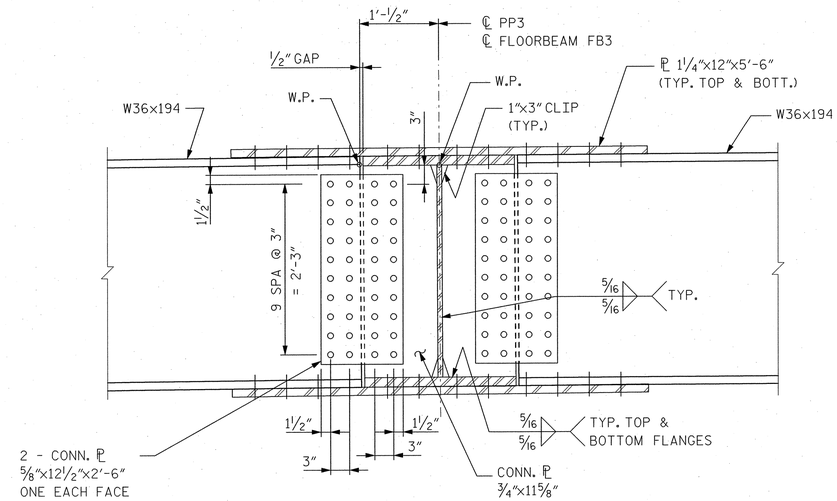

DETAIL 3

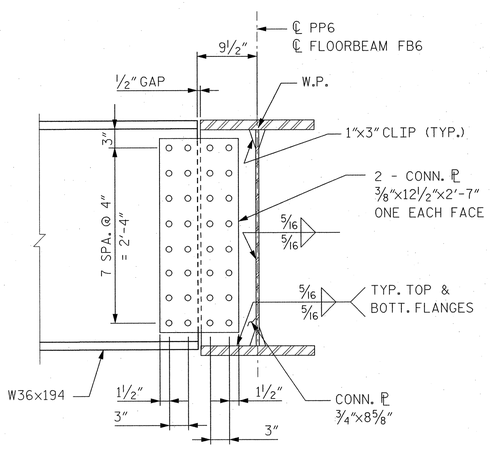

DETAIL 4

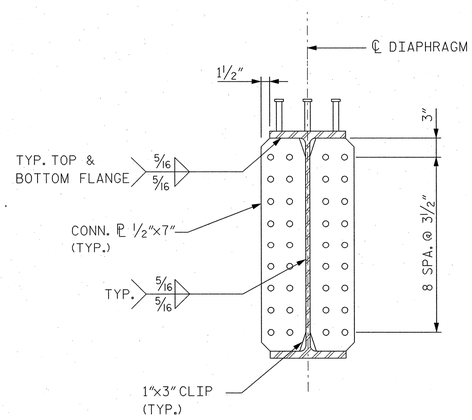

SECTION E-E

NOTES:

1. FOR STRUCTURAL STEEL NOTES, SEE DWG. B154.
2. ALL BOLTS SHALL BE ⅞" DIAMETER, ASTM A325, IN 15/16" DIAMETER HOLES EXCEPT AS NOTED OTHERWISE. CONTACT SURFACES SHALL BE CLASS A EXCEPT FOR STRINGER MOMENT CONNECTIONS @ PP3 AND FOR FLOORBEAM FB3 SHEAR CONNECTION TO BASCULE GIRDERS BG1 & BG2 AND LIVE LOAD SHOE CONNECTION PLATE TO BASCULE GIRDER SHALL HAVE A CLASS B CONTACT SURFACE.
3. FOR LOCATION OF VIEW A-A, VIEW B-B, VIEW C-C, VIEW D-D AND SECTION E-E, SEE DWG. B166.
4. FOR LOCATION OF DETAIL 1, DETAIL 2, DETAIL 3 AND DETAIL 4, SEE DWG. B166.

NORTH CAROLINA PROFESSIONAL SEAL 12916 ENGINEER PAUL J. BARBER 10/3/06

PROJECT NO. B-2532
CRAVEN COUNTY
STATION: 31+21.29 -L-

STATE OF NORTH CAROLINA
DEPARTMENT OF TRANSPORTATION
RALEIGH, NC

BASCULE SPAN "N"
STRINGER DETAILS

HNTB NORTH CAROLINA, P.C.
343 E. Six Forks Rd., Suite 200, Raleigh, N.C. 27609

DRAWN BY SPL DATE 10/06
CHECKED BY SL DATE 10/06
DWG. NO. B167

REVISIONS						SHEET NO.
NO.	BY	DATE	NO.	BY	DATE	S-188
1			3			TOTAL SHEETS
2			4			348

jelia AT NYD072
02-OCT-2006 17:13
J:\2006\42673 - NHTed Cunningham\DGN\1002_Submission\B2532_SD_B167_StringerDetail.dgn

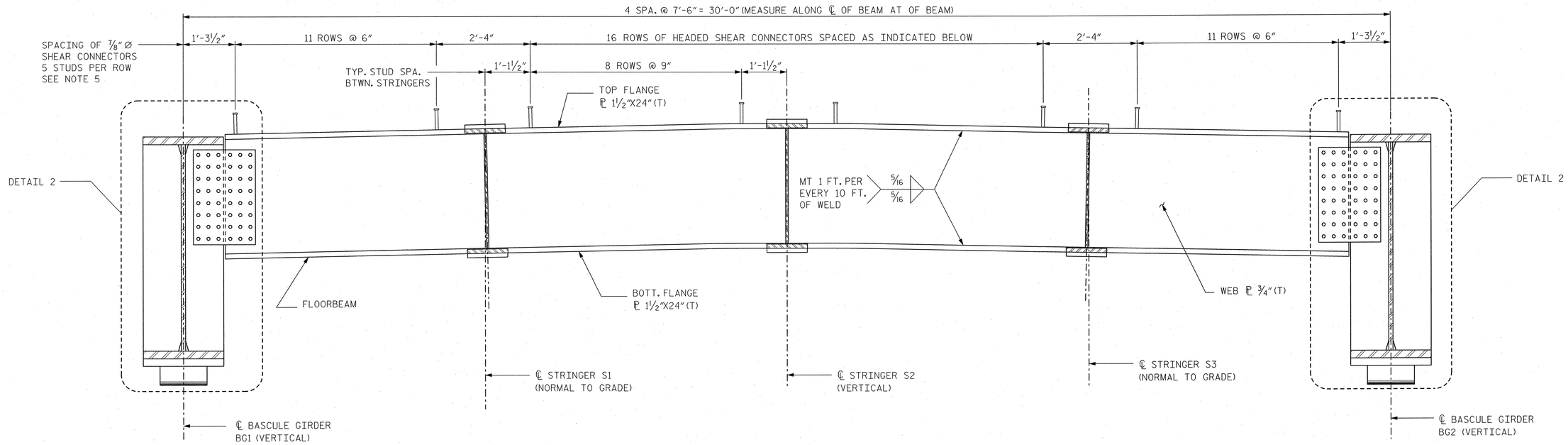

FLOORBEAM FB3 ELEVATION

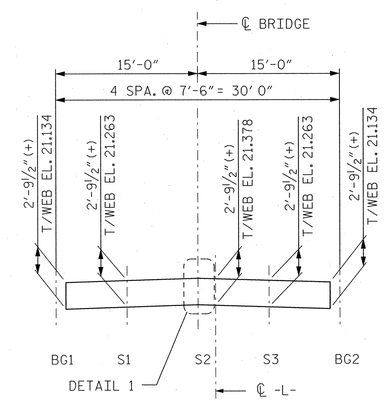

WEB GEOMETRY

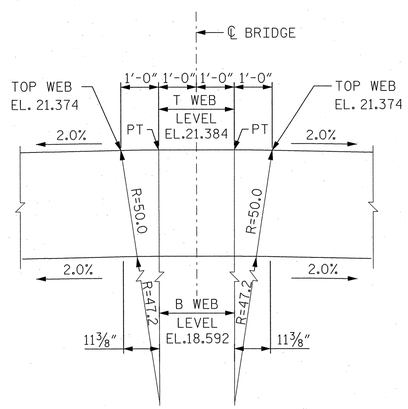

DETAIL 1

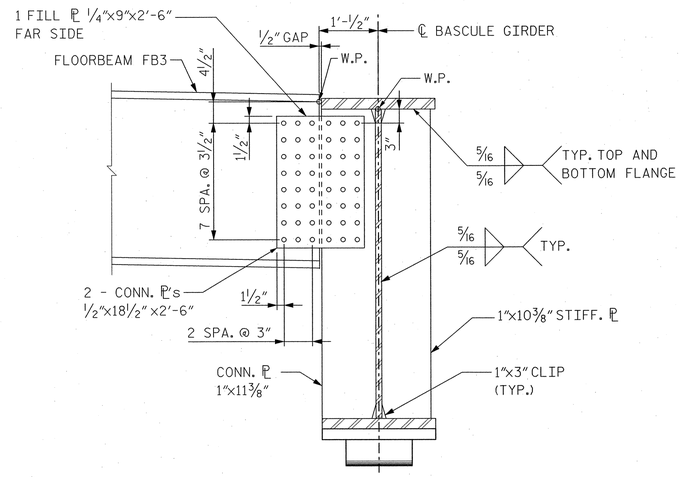

CONNECTION DETAIL 2

NOTES

1. FOR STRUCTURAL STEEL NOTES, SEE DWG. B154.
2. FOR CAMBER TABLE, SEE DWG. B159.
3. PROVIDE A 12-BOLT TEMPORARY FLOORBEAM GIRDER CONNECTION. AFTER INSTALLATION OF ALL STRINGERS, REMOVE TEMPORARY FLOORBEAM SUPPORTS AND ALLOW FLOORBEAM TO DEFLECT. AFTER REMOVAL OF TEMPORARY FLOORBEAM SUPPORTS, PROVIDE PERMANENT FLOORBEAM TO GIRDER CONNECTIONS IN ACCORDANCE WITH THE PLANS AND SPECIFICATIONS.
4. CONNECTION PLATES AND STIFFNERS SHALL BE TRULY VERTICAL OR NORMAL TO GRADE AS NOTED UNDER FULL DEAD LOAD, WITH THE SPAN CLOSED.
5. FOR SHEAR STUD AND WELDING DETAILS, SEE DWG. B176.
6. CONTACT SURFACE FOR FLOORBEAM 3 - GIRDER CONNECTION SHALL BE CLASS B.
7. FOR STRINGER CONNECTION DETAILS, SEE DWG. B167.

BILL OF MATERIALS FLOORBEAM FB3		
LOCATION	STRUCTURAL STEEL (APPROX. LBS.)	SHEAR CONNECTORS (UNIT)
SOUTH BASCULE SPAN	10,772	190
NORTH BASCULE SPAN	10,772	190

NOTE: QUANTITIES ARE FOR FLOORBEAM FB3 ONLY.

PROJECT NO. B-2532
CRAVEN COUNTY
STATION: 31+21.29 -L-

NORTH CAROLINA PROFESSIONAL SEAL 12916 ENGINEER PAUL J. BARBER 10/13/06

STATE OF NORTH CAROLINA
DEPARTMENT OF TRANSPORTATION
RALEIGH, NC

BASCULE SPAN "N"
FLOORBEAM FB3

HNTB NORTH CAROLINA, P.C.
343 E. Six Forks Rd., Suite 200, Raleigh, N.C. 27609

DRAWN BY JRE DATE 10/06
CHECKED BY SL DATE 10/06
DWG. NO. B168

REVISIONS						SHEET NO.
NO.	BY	DATE	NO.	BY	DATE	S-189
1			3			TOTAL SHEETS
2			4			348

Jobs AT NC0072
DATE: 10/13/2006 TIME: 14:41
USER: Cunningham, Alfred
JCode/42973 Cunningham\DGN\100% Submission\B2532_SD_B168_FirbmFB3.dgn

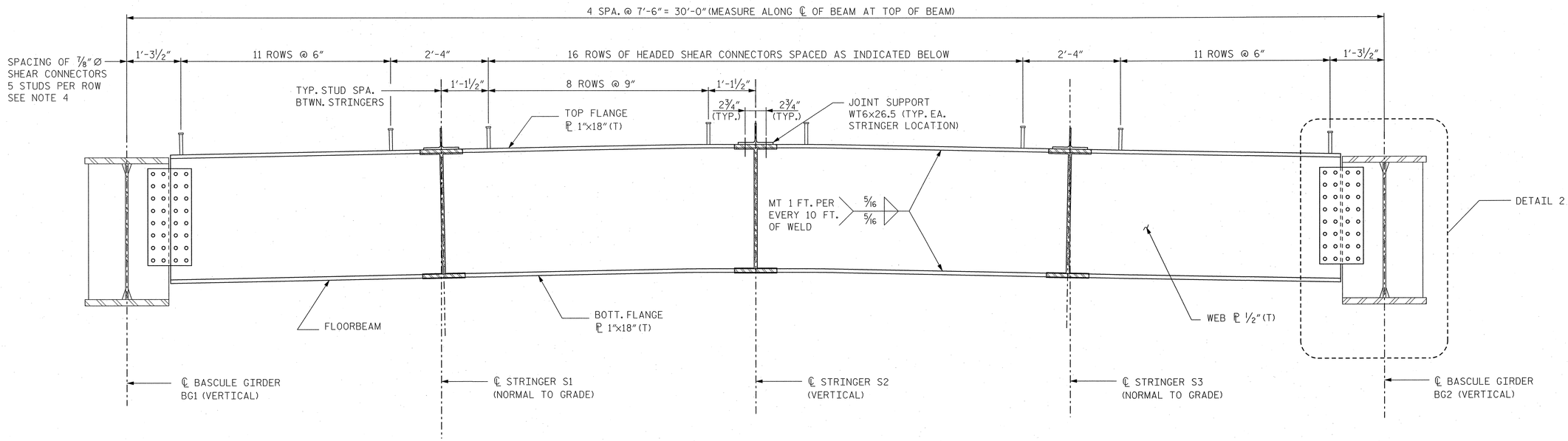

FLOORBEAM FB6 ELEVATION

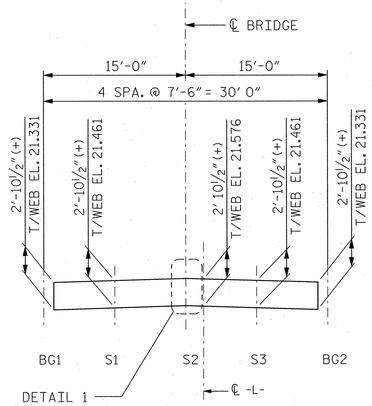

WEB GEOMETRY

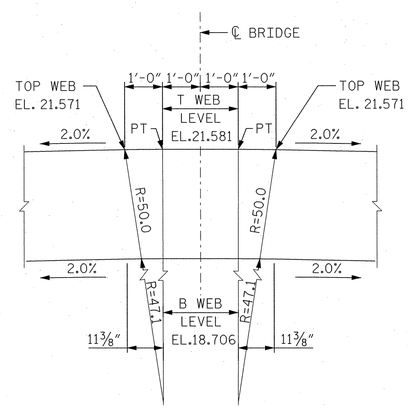

DETAIL 1

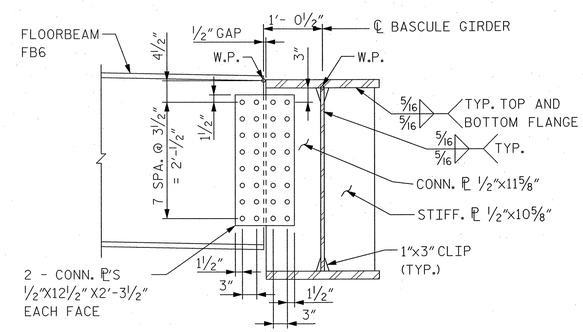

CONNECTION DETAIL 2

NOTES:

1. FOR STRUCTURAL STEEL NOTES, SEE DWG. B154.
2. FOR CAMBER TABLE, SEE DWG. B159.
3. CONNECTION PLATES AND STIFFERNER SHALL BE TRULY VERTICAL OR NORMAL TO GRADE AS NOTED UNDER FULL DEAD LOAD, WITH THE SPAN CLOSED.
4. FOR SHEAR STUD AND WELDING DETAILS, SEE DWG. B176.
5. FOR DECK JOINT ARMOR AT PP6 DETAILS, SEE DWG. B178.
6. FOR TOE SPAN LOCK DETAILS, SEE DWG. B179.

BILL OF MATERIALS FLOORBEAM FB6		
LOCATION	STRUCTURAL STEEL (APPROX. LBS)	SHEAR CONNECTORS (UNIT)
SOUTH BASCULE SPAN	5,818	190
NORTH BASCULE SPAN	5,818	190

NOTE: QUANTITIES ARE FOR FLOORBEAM FB6 ONLY.

PROJECT NO. B-2532

CRAVEN COUNTY

STATION: 31+21.29 -L-

NORTH CAROLINA PROFESSIONAL SEAL 12916 ENGINEER PAUL J. BARBER 10/13/06

STATE OF NORTH CAROLINA
DEPARTMENT OF TRANSPORTATION
RALEIGH, NC

BASCULE SPAN "N"
FLOORBEAM FB6

HNTB NORTH CAROLINA, P.C.
343 E. Six Forks Rd., Suite 200, Raleigh, N.C. 27609

DRAWN BY SPL DATE 10/06
CHECKED BY SL DATE 10/06

DWG. NO. B169

REVISIONS						SHEET NO.
NO.	BY	DATE	NO.	BY	DATE	S-190
1			3			TOTAL SHEETS
2			4			348

bella AT N100472
09/07/2006 14:41
J:\cad\42873 - Alfred Cunningham\DGN\ 100X Submission\B2532_SD_B169_FrbmFB6.dgn

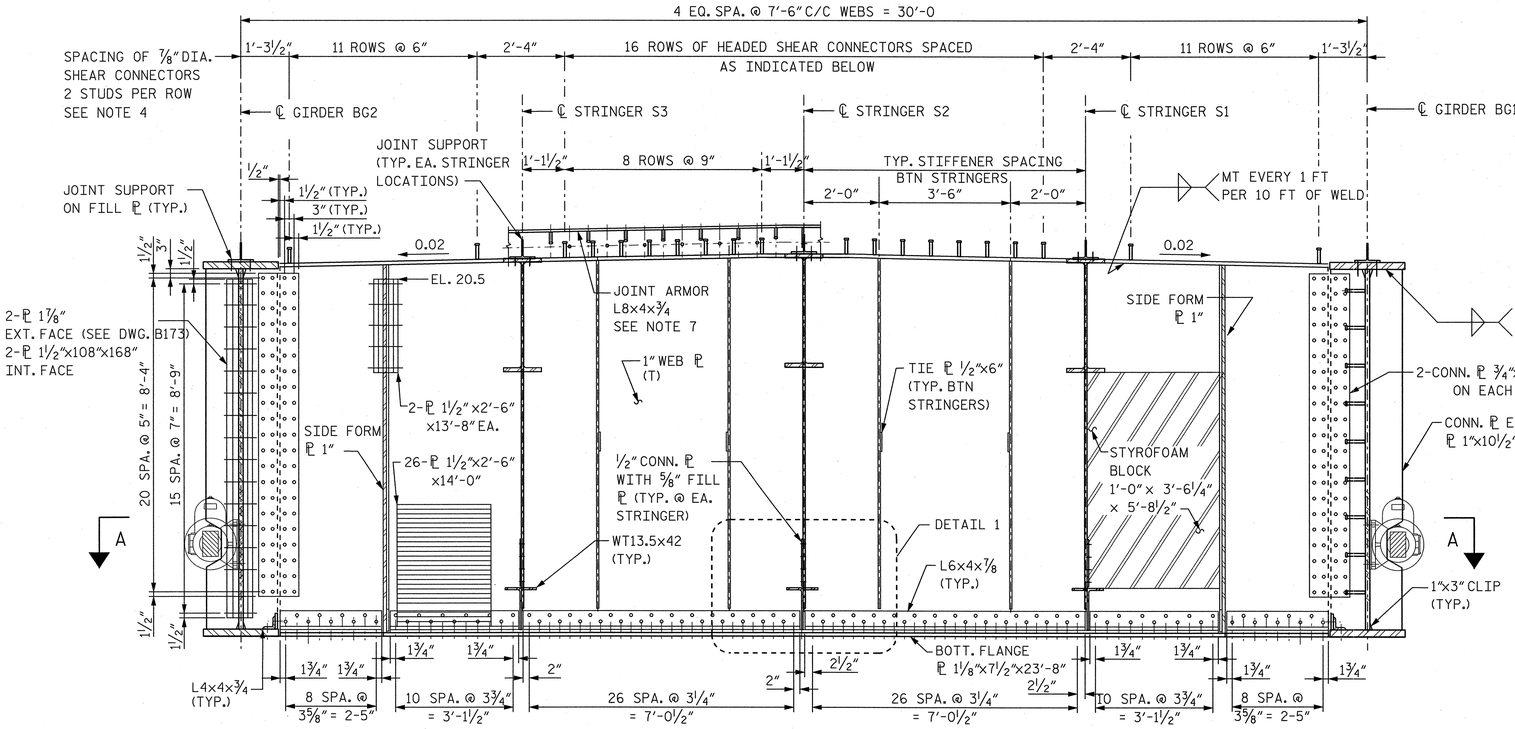

NORTH ELEVATION - FLOORBEAM FBO

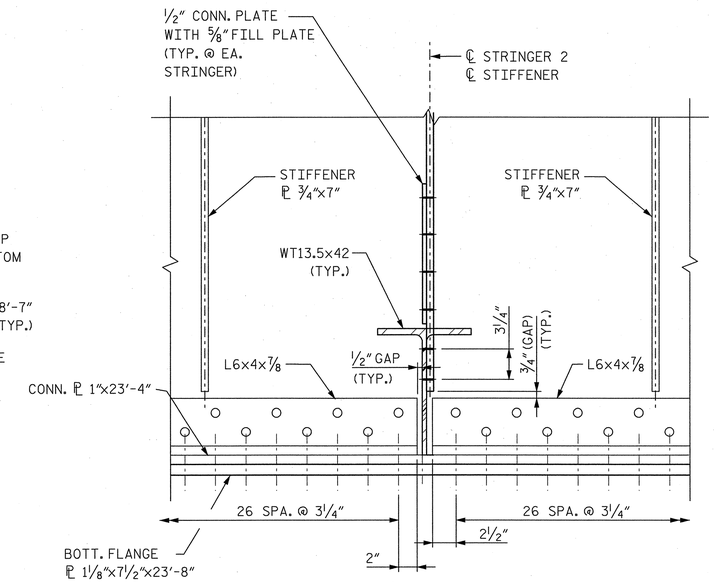

DETAIL 1

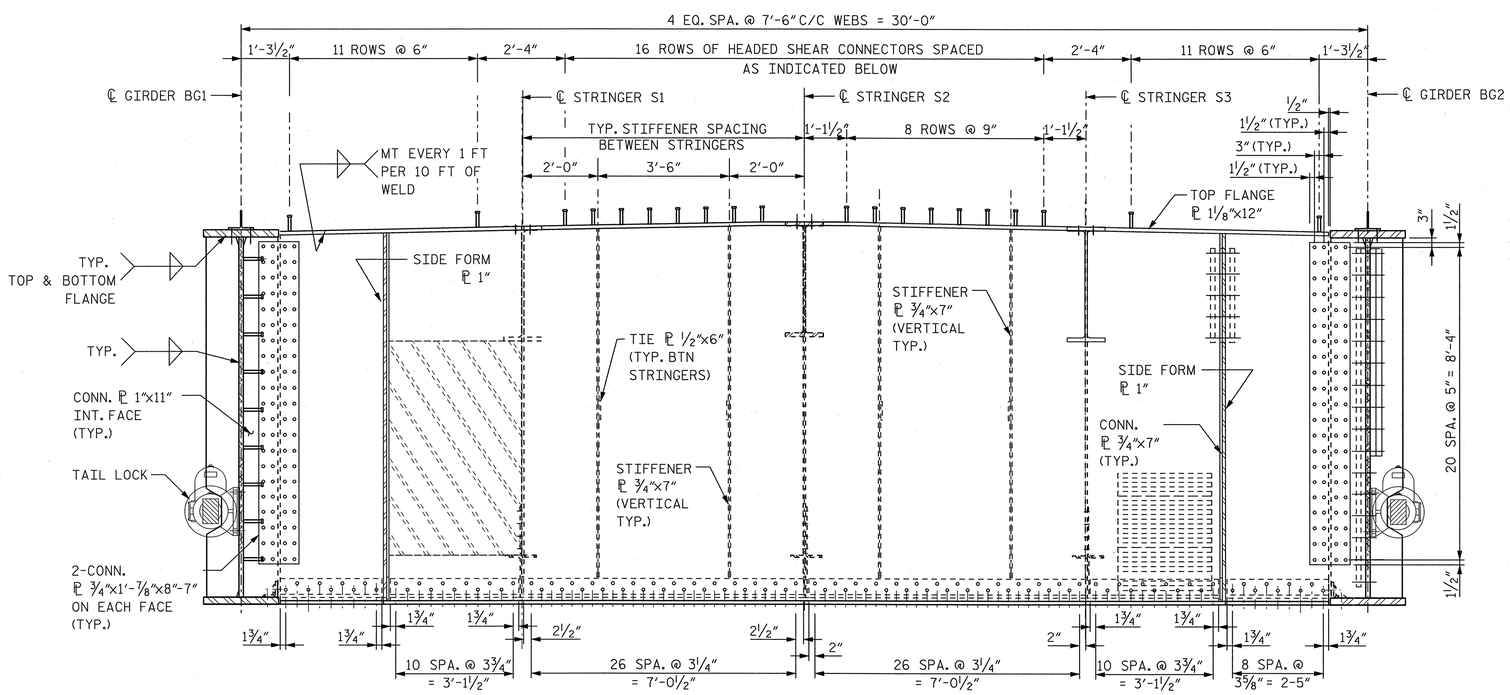

SOUTH ELEVATION - FLOORBEAM FBO

NOTES:

1. FOR STRUCTURAL STEEL NOTES, SEE DWG. B154.
2. FOR WEB GEOMETRY, SEE DWG. B172.
3. FOR COUNTERWEIGHT NOTES, SEE DWG. B175.
4. FOR SHEAR STUDS AND WELDING DETAILS, SEE DWG. B176.
5. FOR SECTION A-A, SEE DWG. B173.
6. FOR DECK JOINT ARMOR AT PPO DETAILS, SEE DWG. B177.
7. FOR BILL OF MATERIALS OF COUNTERWEIGHT AND FLOORBEAM FBO, SEE DWG. B174.

PROJECT NO. B-2532

CRAVEN COUNTY

STATION: 31+21.29 -L-

NORTH CAROLINA PROFESSIONAL SEAL 12916 ENGINEER PAUL J. BARBER 2/12/07

STATE OF NORTH CAROLINA
DEPARTMENT OF TRANSPORTATION
RALEIGH, NC

BASCULE SPAN "N"
FLOORBEAM FBO

HNTB NORTH CAROLINA, P.C.
343 E. Six Forks Rd., Suite 200, Raleigh, N.C. 27609

DRAWN BY SPL DATE 10/06
CHECKED BY JN DATE 10/06

DWG. NO. B170

REVISIONS						
NO.	BY	DATE	NO.	BY	DATE	
1			3			
2			4			

SHEET NO. S-191

TOTAL SHEETS 348

slam AT NYODI11
09-FEB-2007 16:50
dgn c:\odot\428673 - Alfred Cunningham\DGN\100% Submission\B2532_SD_B170_FlrbmFB0.dgn

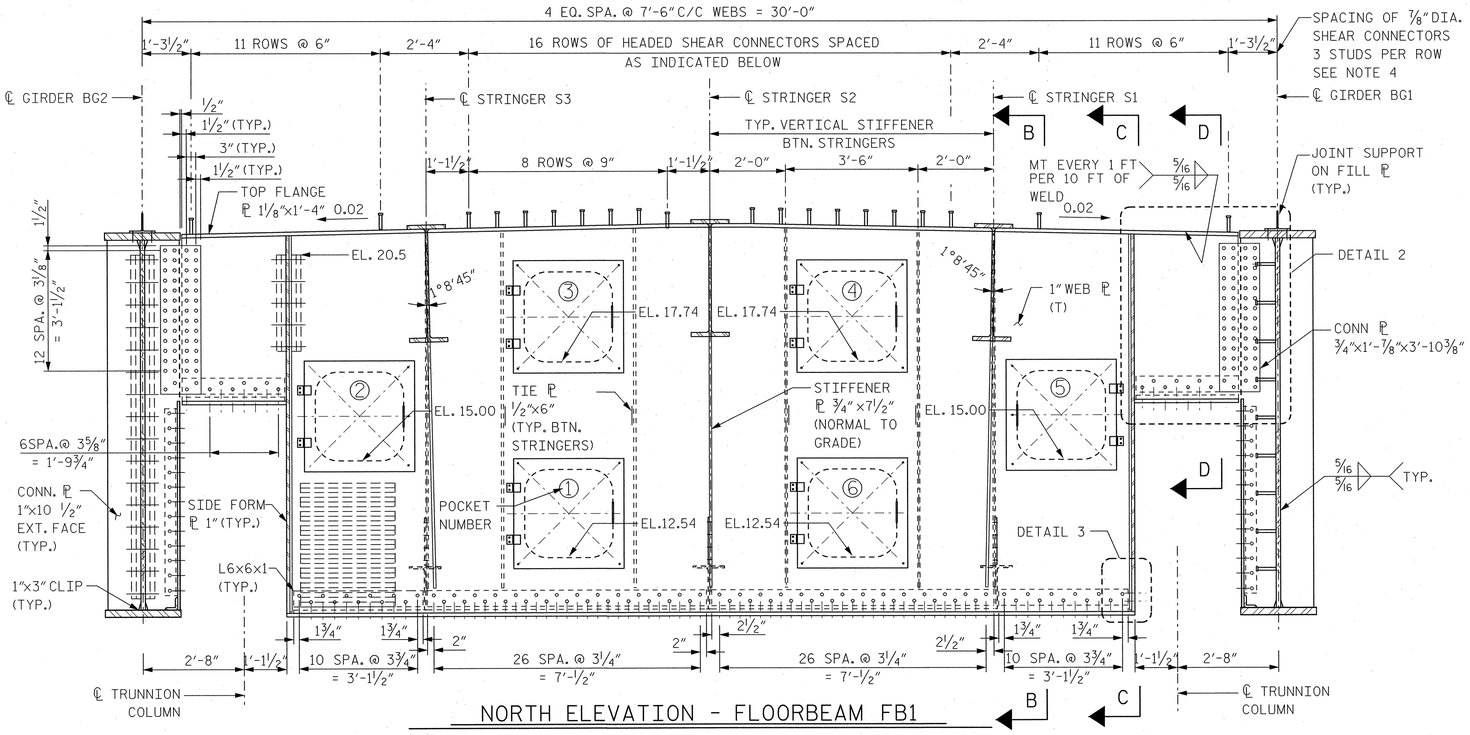

NORTH ELEVATION - FLOORBEAM FB1

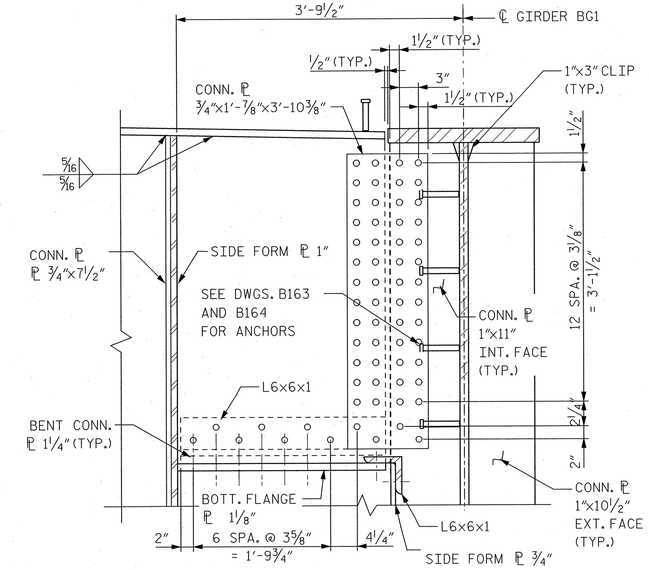

DETAIL 2

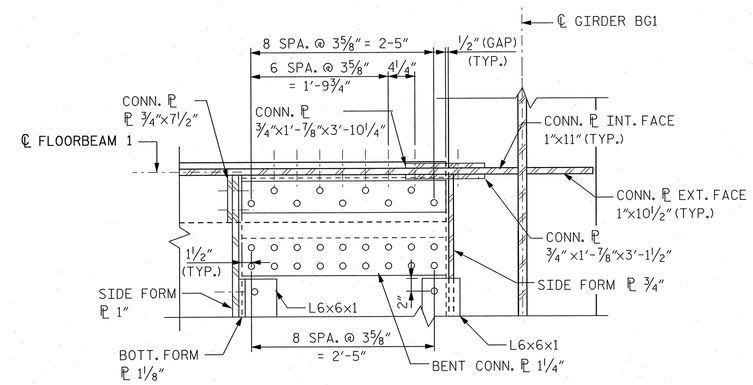

SECTION F-F

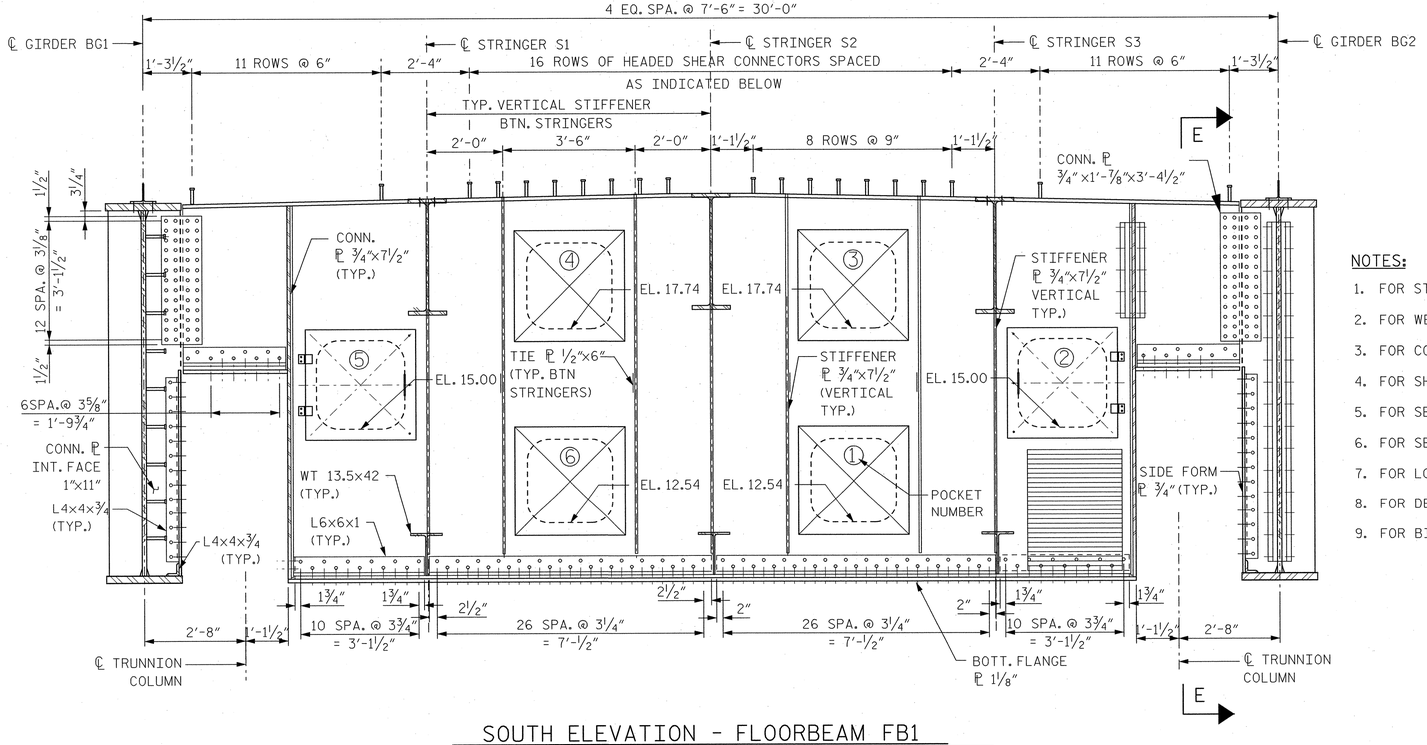

SOUTH ELEVATION - FLOORBEAM FB1

NOTES:

1. FOR STRUCTURAL STEEL NOTES, SEE DWG. B154.
2. FOR WEB GEOMETRY, SEE DWG. B172.
3. FOR COUNTERWEIGHT NOTES, SEE DWG. B175.
4. FOR SHEAR STUDS AND WELDING DETAILS, SEE DWG. B176.
5. FOR SECTIONS B-B AND C-C, SEE DWG. B172.
6. FOR SECTION E-E, SEE DWG. B173.
7. FOR LOCATION OF SECTION F-F, SEE DWG. B172.
8. FOR DETAIL 3, SEE DWG. B174.
9. FOR BILL OF MATERIALS OF COUNTERWEIGHT AND FLOORBEAM FB1, SEE DWG. B174.

PROJECT NO. B-2532

CRAVEN COUNTY

STATION: 31+21.29 -L-

NORTH CAROLINA PROFESSIONAL SEAL 12916 170 ENGINEER PAUL J. BARBER 10/9/06

STATE OF NORTH CAROLINA
DEPARTMENT OF TRANSPORTATION
RALEIGH, NC

BASCULE SPAN "N"
FLOORBEAM FB1

HNTB NORTH CAROLINA, P.C.
343 E. Six Forks Rd., Suite 200, Raleigh, N.C. 27609

DRAWN BY PE DATE 10/06
CHECKED BY JN DATE 10/06

DWG. NO. B171

REVISIONS						SHEET NO.
NO.	BY	DATE	NO.	BY	DATE	S-192
1			3			TOTAL SHEETS
2			4			348

jella AT NYDOT2
02-OCT-2006 14:47
s:\bsds\42813_Alfred Cunningham\DGN\1003_Submission\B2532_STD_B171_FloorFB1.dgn

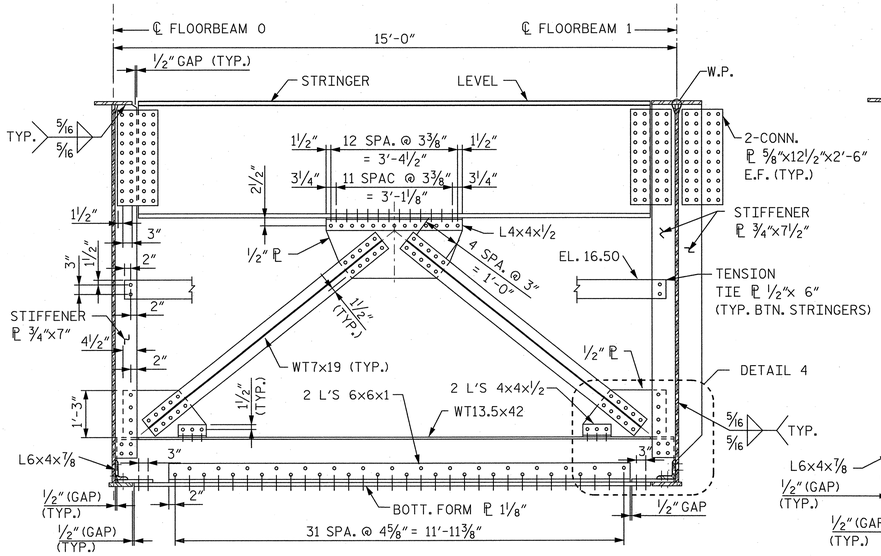

COUNTERWEIGHT SECTION B-B

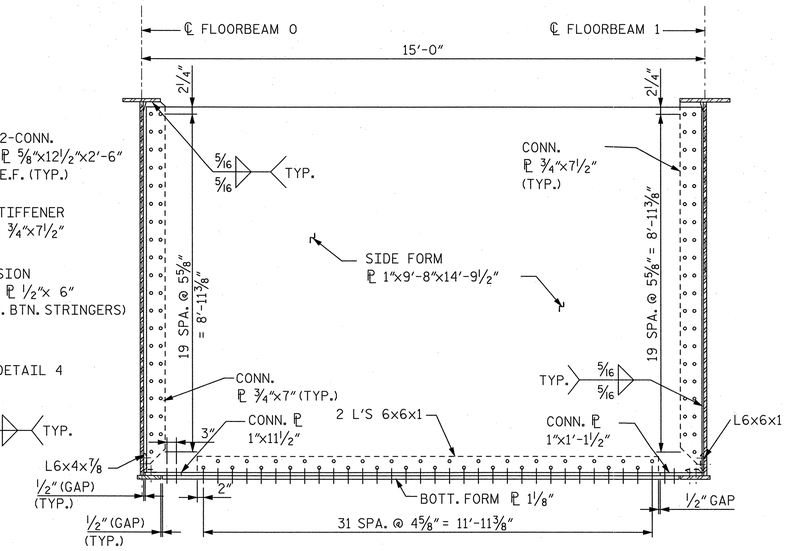

COUNTERWEIGHT SECTION C-C

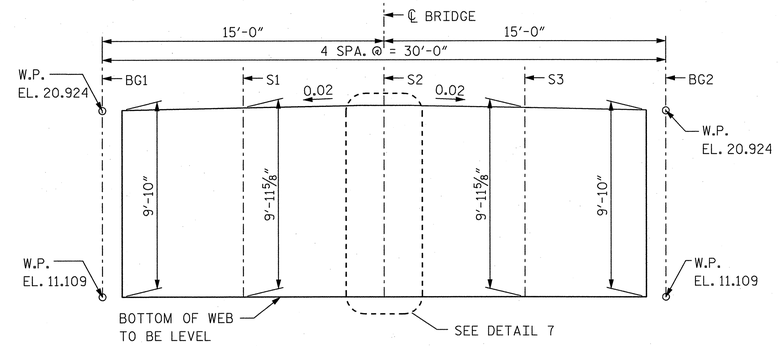

FLOORBEAM FBO WEB GEOMETRY

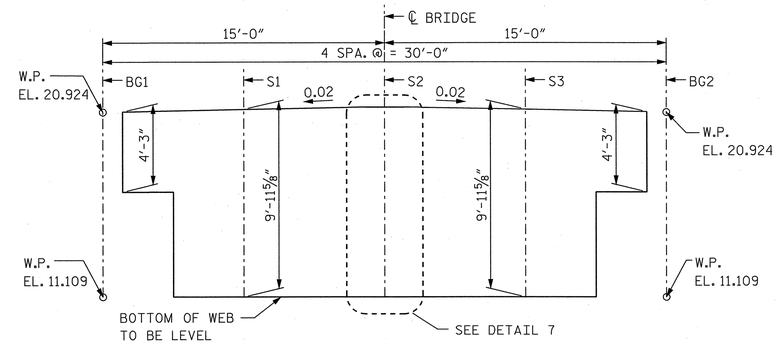

FLOORBEAM FB1 WEB GEOMETRY

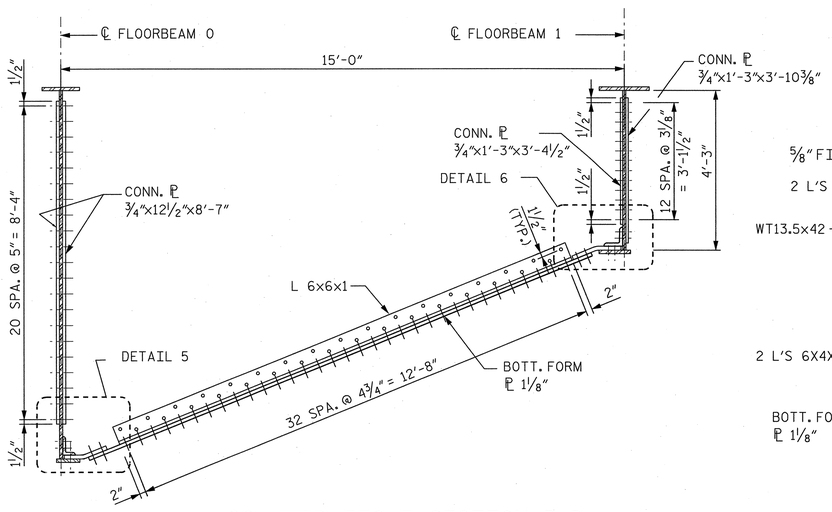

COUNTERWEIGHT SECTION D-D

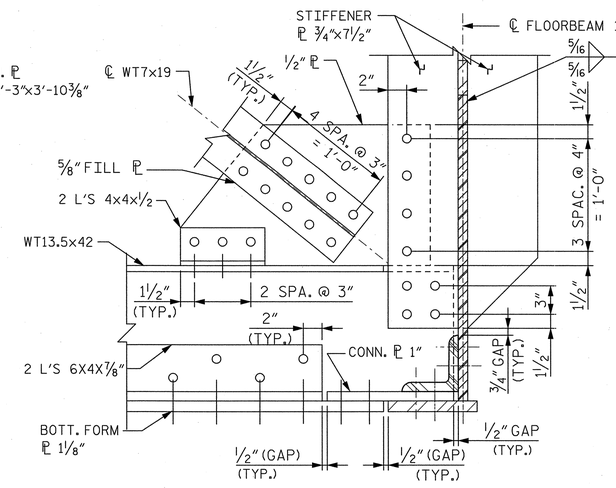

DETAIL 4

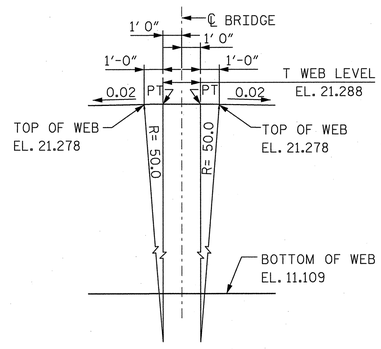

DETAIL 7

NOTES:

1. FOR STRUCTURAL STEEL NOTES, SEE DWG. B154.
2. FOR COUNTERWEIGHT NOTES, SEE DWG. B175.
3. FOR SECTION F-F, SEE DWG. B171.
4. FOR BENT PLATE DETAILS, SEE DWG. B173.

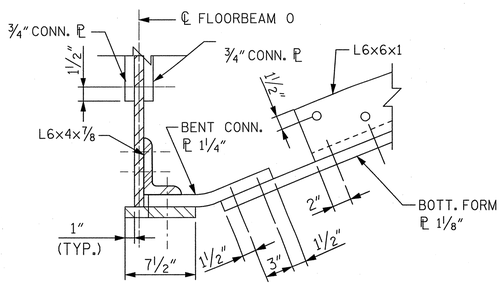

DETAIL 5

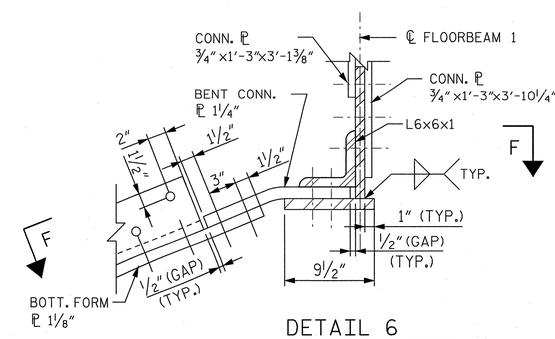

DETAIL 6

PROJECT NO. B-2532

CRAVEN **COUNTY**

STATION: 31+21.29 -L-

STATE OF NORTH CAROLINA
DEPARTMENT OF TRANSPORTATION
RALEIGH, NC

BASCULE SPAN "N"
COUNTERWEIGHT SECTIONS
AND DETAILS

NORTH CAROLINA PROFESSIONAL SEAL 12916 ENGINEER PAUL J. BARBER 2/12/07

HNTB NORTH CAROLINA, P.C.
343 E. Six Forks Rd., Suite 200, Raleigh, N.C. 27609

DRAWN BY PE DATE 10/06
CHECKED BY JN DATE 10/06

DWG. NO. **B172**

REVISIONS						SHEET NO.
NO.	BY	DATE	NO.	BY	DATE	S-193
1			3			TOTAL SHEETS
2			4			348

dgn
08-FEB-2007 16:52
J:\cadd\42873 - Alfred Cunningham\DGN\1007 Submission\B2532_SD_B172_CWgtsect.dgn
AT NY00111

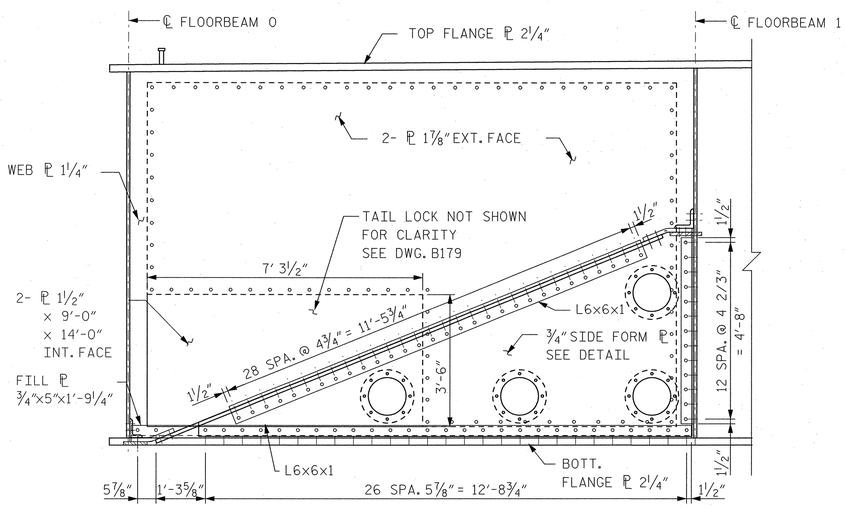

SECTION E-E

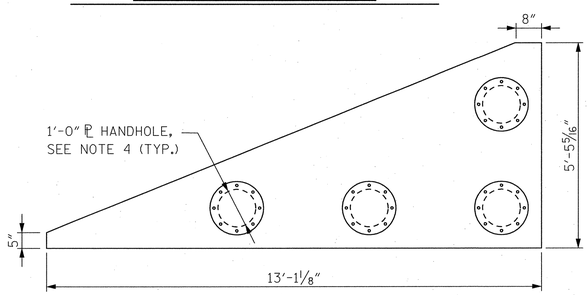

¾" SIDE FORM PLATE

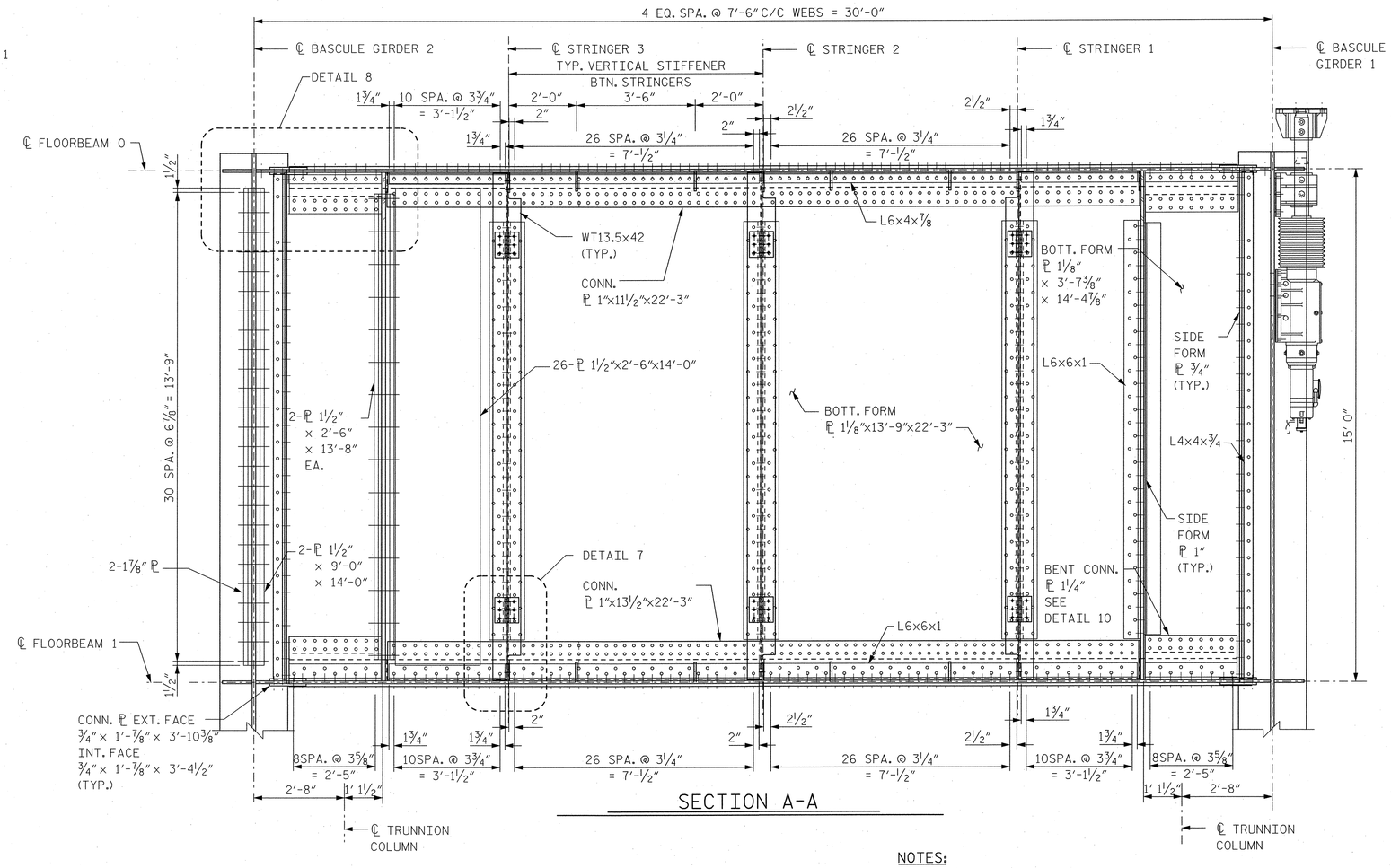

SECTION A-A

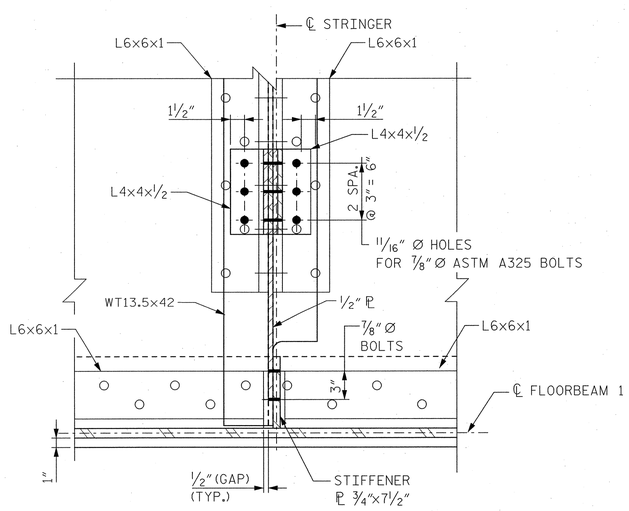

DETAIL 7

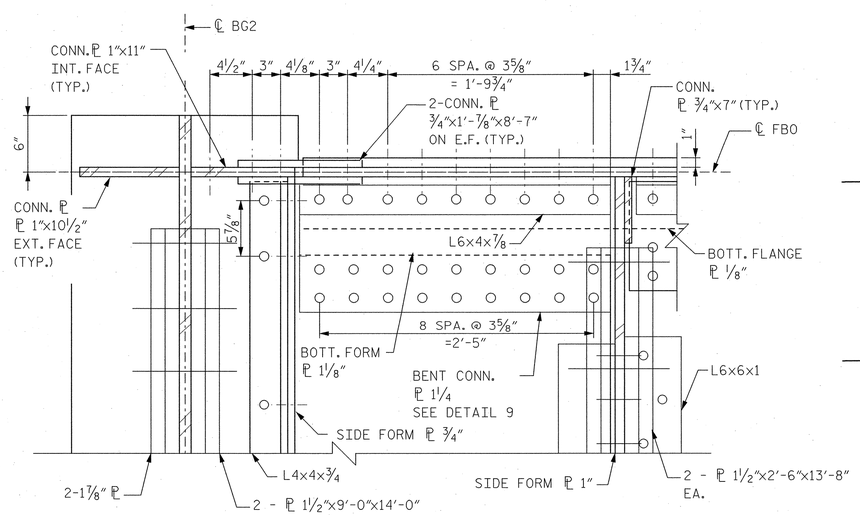

DETAIL 8

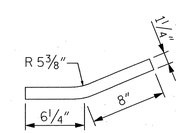

DETAIL 9

BENT. CONN. PLATE AT FBO

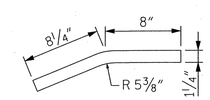

DETAIL 10

BENT. CONN. PLATE AT FB1

NOTES:

1. FOR STRUCTURAL STEEL NOTES, SEE DWG. B154.
2. FOR LOCATION OF SECTION A-A, SEE DWG. B170.
3. FOR LOCATION OF SECTION E-E, SEE DWG. B171.
4. PROVIDE ½" × 17" DIA. COVER ℙ ON OUTSIDE OF HANDHOLE. FASTEN WITH 8 - ¾" DIA. AASHTO M164 TYPE 1 BOLTS SPACED EQUALLY AND TACK WELD NUTS TO INSIDE OF SIDE FORM PLATE.

PROJECT NO. B-2532

CRAVEN **COUNTY**

STATION: 31+21.29 -L-

NORTH CAROLINA PROFESSIONAL SEAL 12916 ENGINEER PAUL J. BARBER 10/24/06

STATE OF NORTH CAROLINA
DEPARTMENT OF TRANSPORTATION
RALEIGH, NC

BASCULE SPAN "N"
COUNTERWEIGHT DETAILS

HNTB NORTH CAROLINA, P.C.
343 E. Six Forks Rd., Suite 200, Raleigh, N.C. 27609

DRAWN BY PE DATE 10/06
CHECKED BY JN DATE 10/06

DWG. NO. **B173**

REVISIONS						SHEET NO.
NO.	BY	DATE	NO.	BY	DATE	S-194
1			3			TOTAL SHEETS
2			4			348

Jobs - AT_W100072
USER: JCOOK, 10/24/2006
J:\2004\42573 - Alfred Cunningham\DGN\100% Submission\B2532_SD_B173_CWpdef1.dgn

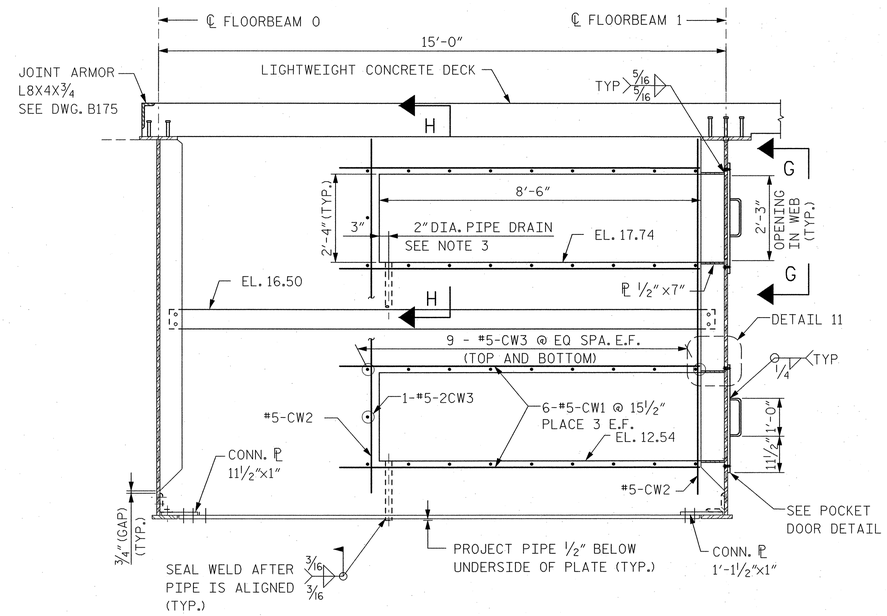

SECTION - POCKET ① AND ③

BILL OF MATERIALS COUNTERWEIGHT

LOCATION	STRUCTURAL STEEL (APPROX. LBS.)	SHEAR CONNECTORS (EA.)	COUNTERWEIGHT CONCRETE HEAVY WEIGHT (CY)	REINFORCING STEEL EPOXY COATED (LBS.)
NORTH BASCULE SPAN	210,880	325	156	1,417
SOUTH BASCULE SPAN	210,880	325	156	1,417

NOTE: QUANTITIES ARE FOR THE COUNTERWEIGHT AND FLOORBEAMS FB0 AND FB1, INCLUDING ALL STELL WITHIN LIMITS OF COUNTERWEIGHT EXCLUDING STRINGERS.

BAR TYPES

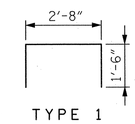

TYPE 1

ALL BAR DIMENSIONS ARE OUT TO OUT

REINFORCING BAR SCHEDULE

MARK	NO.	SIZE	TYPE	LENGTH	WEIGHT
CW1	32	5	STR	9'-4"	312
CW2	50	5	STR	9'-4"	487
CW3	264	5	1	5'-8"	1,560
CW4	32	5	STR	12'-4"	412
CW5	10	5	STR	6'-0"	63

NOTE: QUANTITY OF BARS ARE FOR BOTH SOUTH AND NORTH BASCULE SPAN COUNTERWEIGHTS.

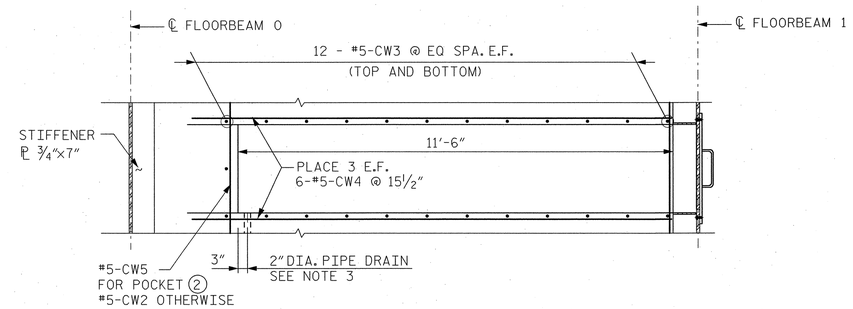

SECTION - OTHER POCKETS

NOTES:

1. FOR STRUCTURAL STEEL NOTES, SEE DWG. B154.
2. FOR LOCATION OF COUNTERWEIGHT POCKETS, SEE DWG. B171 OR B175.
3. PROVIDE 2" Ø SCHEDULE 40 PIPE DRAIN AT EACH COUNTERWEIGHT POCKET. PIPE TO BE GALVANIZED AND PROJECT ½" BELOW BOTTOM PLATE OF COUNTERWEIGHT. COST TO BE INCLUDED UNDER THE STRUCTURAL STEEL PAY ITEM.
4. PROVIDE 2 HEAVYWEIGHT FULL SURFACE HINGES AND ⅜" FILL PLATES. BOLT HINGES AND FILL PLATES TO WEB USING ½" Ø A325 BOLTS, SEE DETAIL 2/B173.
5. PRIOR TO PLACING COUNTERWEIGHT CONCRETE, INSTALL ½" Ø BOLTS, GREASE BOLTS WELL PRIOR TO INSTALATION.
6. SEE COUNTERWEIGHT NOTES, SEE DWG. B175.
7. FOR LOCATION OF DETAIL 3, SEE DWG. B171.

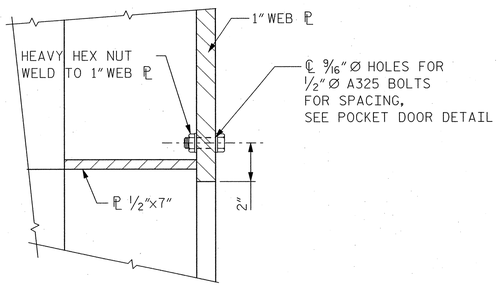

DETAIL 11

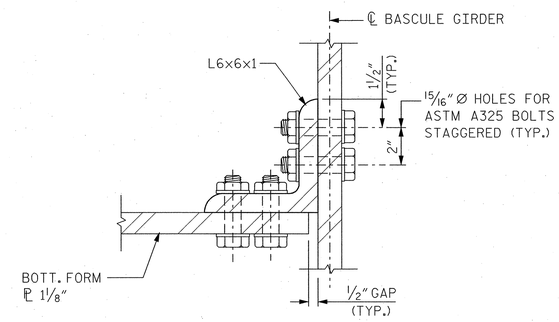

DETAIL 3

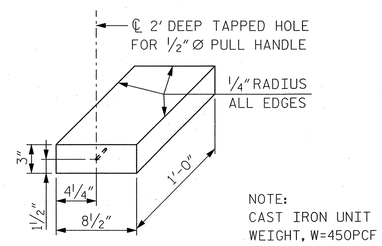

CAST IRON BLOCK

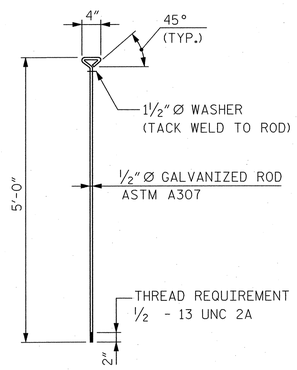

PULL HANDLE DETAIL

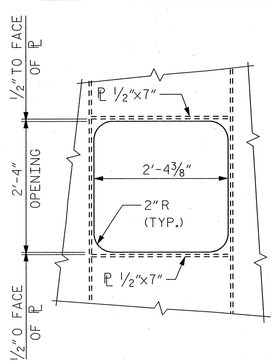

SECTION G-G

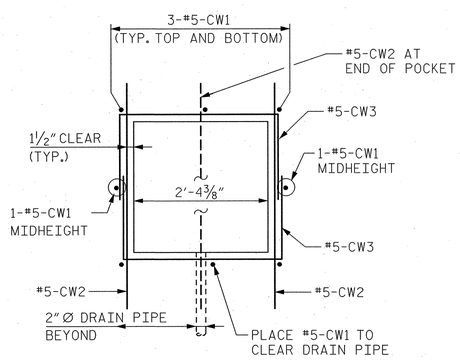

SECTION H-H

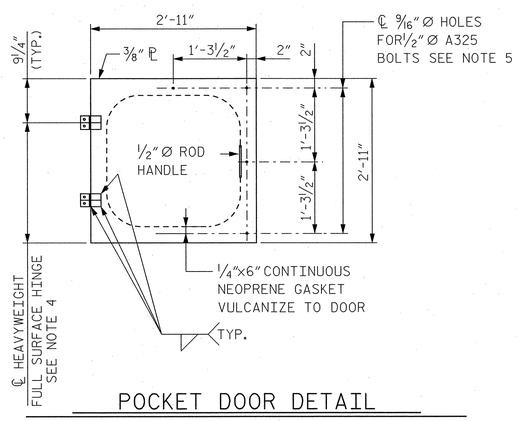

POCKET DOOR DETAIL

PROJECT NO. B-2532

CRAVEN **COUNTY**

STATION: 31+21.29 -L-

STATE OF NORTH CAROLINA
DEPARTMENT OF TRANSPORTATION
RALEIGH, NC

BASCULE SPAN "N"
COUNTERWEIGHT DETAILS

NORTH CAROLINA PROFESSIONAL SEAL 12916 ENGINEER PAUL J. BARBER 10/13/06

HNTB NORTH CAROLINA, P.C.
343 E. Six Forks Rd., Suite 200, Raleigh, N.C. 27609

DRAWN BY PE DATE 10/06
CHECKED BY JN DATE 10/06

DWG. NO. **B174**

REVISIONS						SHEET NO.
NO.	BY	DATE	NO.	BY	DATE	S-195
1			3			TOTAL SHEETS
2			4			348

Jobno = AT NY0072
02-OCT-2006 14:49
s:\bascule\B2532_Alfred Cunningham\DGN\1002_Submission\B2532_SD_B174_CWgrided2.dgn

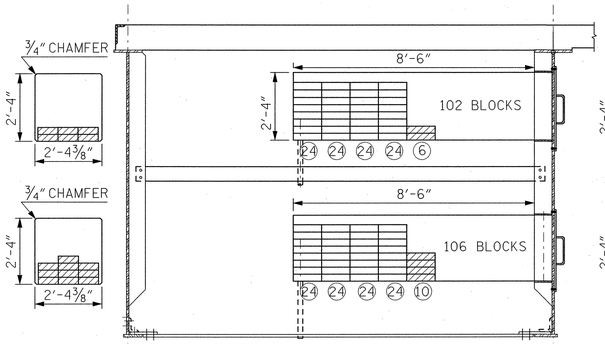

POCKET 1 & 3

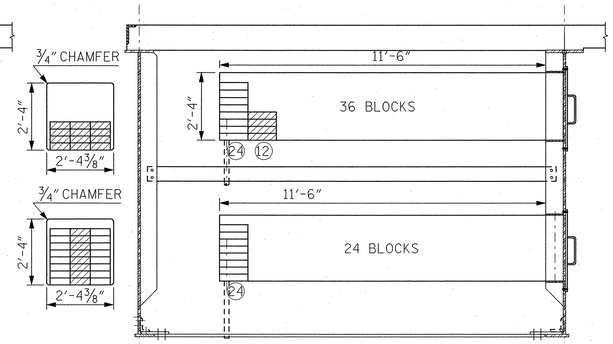

POCKET 4 & 6

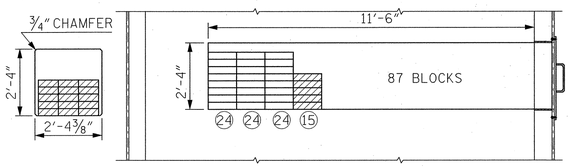

POCKET 2

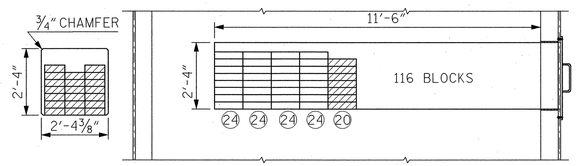

POCKET 5

SOUTH BASCULE SPAN BALANCE BLOCK LAYOUT

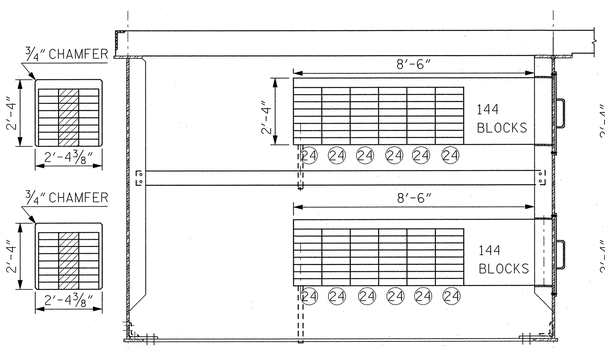

POCKET 1 & 3

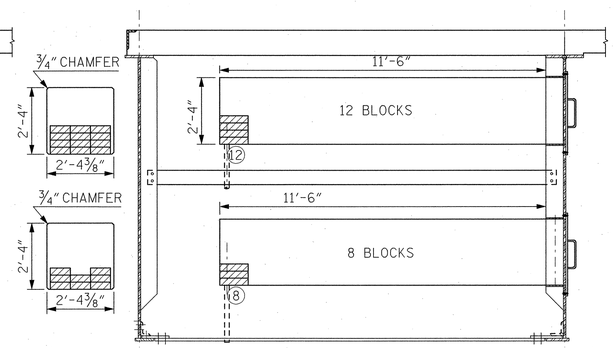

POCKET 4 & 6

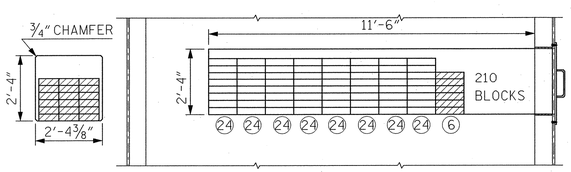

POCKET 2

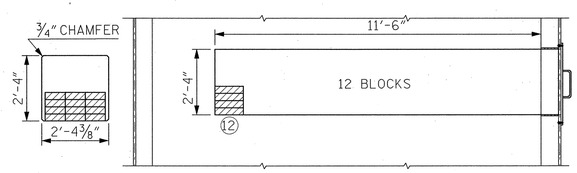

POCKET 5

NORTH BASCULE SPAN BALANCE BLOCK LAYOUT

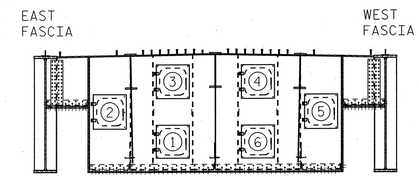

SOUTH BASCULE SPAN

NORTH ELEVATION - FLOORBEAM FB1
(LOOKING SOUTH)

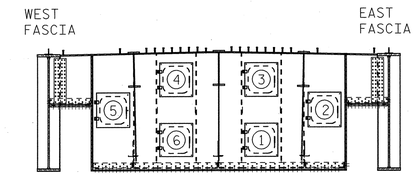

NORTH BASCULE SPAN

SOUTH ELEVATION - FLOORBEAM FB1
(LOOKING NORTH)

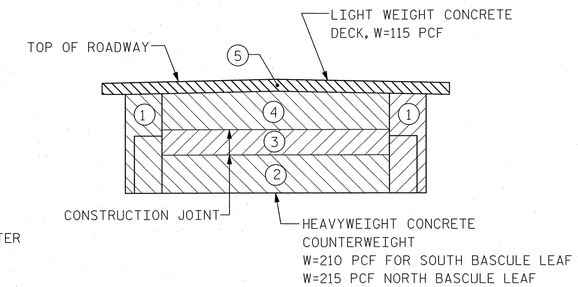

CONCRETE UNIT WEIGHT

COUNTERWEIGHT

COUNTERWEIGHT NOTES:

1. STEEL SURFACES IN CONTACT WITH CONCRETE SHALL BE PRIMED BUT NOT PAINTED.
2. BOLTS CONNECTING THE PARTS OF THE COUNTERWEIGHT BOX SHALL BE INSTALLED WITH THE BOLT HEADS ON THE EXTERIOR OF THE COUNTERWEIGHT BOX.
3. PROVIDE 1 INCH DIAMETER TAPPED HOLES, 4 FEET (+/-) ON CENTER IN EACH DIRECTION IN THE BOTTOM, SIDES AND ENDS OF THE COUNTERWEIGHT BOX. THESE HOLES SHALL BE TEMPORARILY PLUGGED WITH THREADED STEEL PLUGS, WHICH SHALL BE REMOVED AFTER THE INITIAL SET OF THE COUNTERWEIGHT CONCRETE.
4. THE UNIT WEIGHT OF THE COUNTERWEIGHT CONCRETE SHALL BE AS CLOSE AS PRACTICAL TO THE THEORETICAL UNIT WEIGHT OF 210 PCF FOR THE SOUTH LEAF AND 215 PCF FOR THE NORTH LEAF. THE UNIT WEIGHT OF THE LIGHT WEIGHT CONCRETE DECK PLACED ABOVE THE COUNTERWEIGHT SHALL BE 115 PCF.
5. THE CONCRETE IN THE COUNTERWEIGHT BOX SHALL BE PLACED IN LIFTS NOT EXCEEDING 3.5 FT. IN HEIGHT. VIBRATE CONCRETE WELL TO ENSURE THAT NO VOIDS ARE FORMED. EACH LIFT SHALL SET FOR A MINIMUM OF 24 HOURS BEFORE THE SUCCEEDING LIFT IS PLACED. CONCRETE SHALL BE PLACED UNIFORMLY ACROSS THE ENTIRE AREA OF THE COUNTERWEIGHT BOX.
6. BALANCE BLOCKS SHALL BE CAST IRON AND AS DETAILED ON DWG. B174. EACH BALANCE BLOCK SHALL WEIGH NOT LESS THAN 78.5 LBS. NOR MORE THAN 80.5 LBS. THREADS IN THE BALANCE BLOCKS SHALL BE MADE TO ACCEPT THE THREADED PORTION OF THE 1/2 INCH DIAMETER PULL HANDLE.
7. THE COUNTERWEIGHT HAS BEEN SIZED AND WEIGHTED TO BALANCE THE TOTAL SPAN WEIGHT. COUNTERWEIGHT POCKETS HAVE BEEN PROVIDED TO ACCOMMODATE PLACEMENT OF SUFFICIENT AMOUNT OF BALANCE BLOCKS REQUIRED FOR A 3.5% UNDERRUN TO A 5.0% OVERRUN IN THE 100% WEIGHT OF THE SPAN. THE 100% WEIGHT OF THE SPAN IS THE THEORETICAL SPAN WEIGHT AS DETERMINED BY DESIGN ASSUMPTIONS AND IS TO BE VERIFIED BY THE CONTRACTOR. THE CONTRACTOR IS RESPONSIBLE TO BALANCE THE SPAN IN ALL POSITIONS, USING ACTUAL WEIGHTS OF THE SPAN ELEMENTS.
8. FOR BIDDING PURPOSES, 80,080 LBS (37,680 LBS FOR THE SOUTH LEAF AND 42,400 LBS FOR THE NORTH LEAF) OF BALANCE BLOCKS SHALL BE PROVIDED IN THE COUNTERWEIGHT POCKETS PER BALANCE BLOCK PLACEMENT TABLE AND AN ADDITIONAL 16,080 LBS (7,600 LBS FOR THE SOUTH LEAF AND 8,480 LBS FOR THE NORTH LEAF) OF BALANCE BLOCKS TO BE STORED AT THE SITE AS DIRECTED BY THE ENGINEER.

COUNTERWEIGHT BALANCE BLOCKS PLACEMENT

POCKET NUMBER	NUMBER OF BLOCKS	
	SOUTH BASCULE LEAF	NORTH BASCULE LEAF
1	102	144
2	87	210
3	106	144
4	36	12
5	116	12
6	24	8
TOTAL	471	530

(SEE NOTE 7)

BILL OF MATERIALS BALANCE BLOCKS

LOCATION	BALANCE BLOCKS, CAST IRON (EA)
SOUTH BASCULE SPAN	471
PIER 13	95
NORTH BASCULE SPAN	530
PIER 14	106

NORTH CAROLINA PROFESSIONAL SEAL 12916 ENGINEER PAUL J. BARBER 10/20/06

PROJECT NO. B-2532
CRAVEN COUNTY
STATION: 31+21.29 -L-

STATE OF NORTH CAROLINA
DEPARTMENT OF TRANSPORTATION
RALEIGH, NC

BASCULE SPAN
COUNTERWEIGHT
BALANCE BLOCK LAYOUT

HNTB NORTH CAROLINA, P.C.
343 E. Six Forks Rd., Suite 200, Raleigh, N.C. 27609

DRAWN BY PE DATE 10/06
CHECKED BY JN DATE 10/06
DWG. NO. B175

REVISIONS						SHEET NO.
NO.	BY	DATE	NO.	BY	DATE	S-196
1			3			TOTAL SHEETS
2			4			348

jelle AT W10002
$$$$ 20061024
J:\cadd\42873 - Alfred Cunningham\OGW\100% Submission\B2532_SD_B175_LeafBlock.dgn

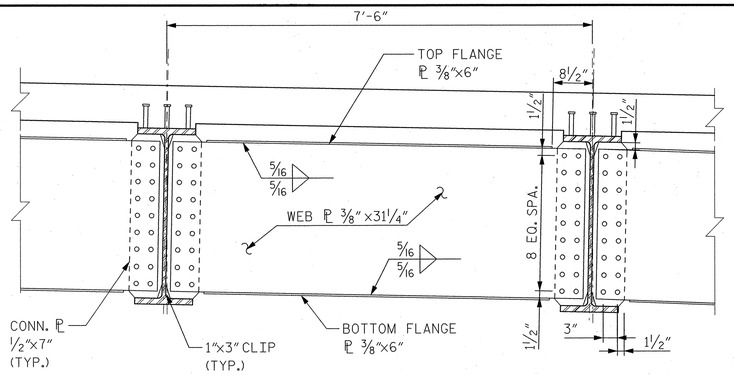

DIAPHRAGM TYPE "D1" DETAIL

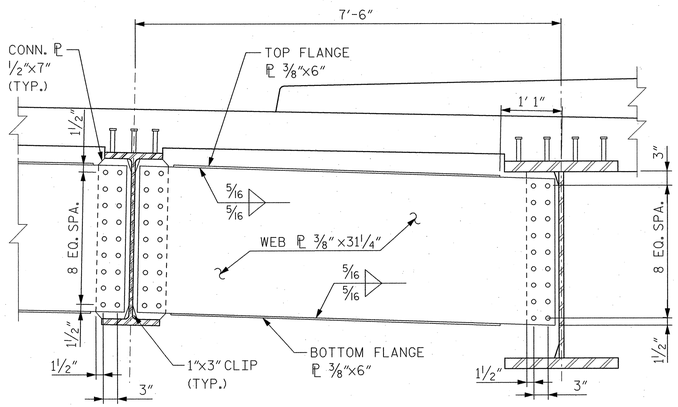

DIAPHRAGM TYPE "D2" DETAIL

BILL OF MATERIALS DIAPHRAGMS	
LOCATION	STRUCTURAL STEEL (APPROX. LBS)
SOUTH BASCULE SPAN	1,905
NORTH BASCULE SPAN	1,905

NOTE: QUANTITIES ARE FOR DIAPHRAGMS ONLY.

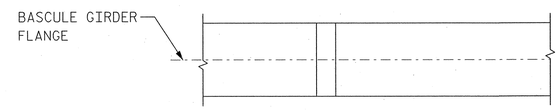

PLAN

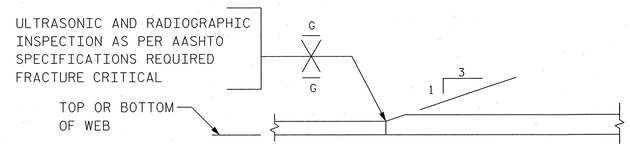

ELEVATION

FLANGE SPLICE DETAIL

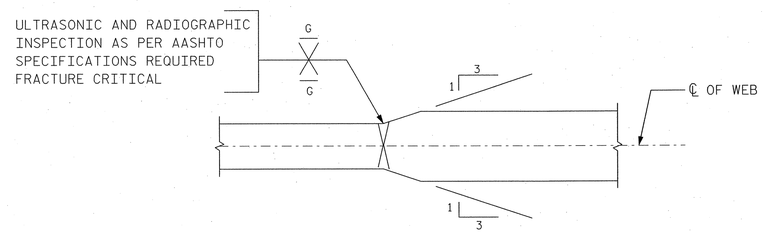

WEB SPLICE DETAIL

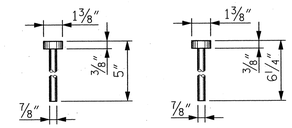

DETAIL OF STUD

(SEE NOTE 3)

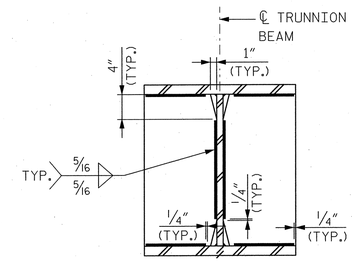

STIFFENER TYP. WELDING DETAIL

NOTES:

1. FOR STRUCTURAL STEEL NOTES, SEE DWG. B154.
2. STUD SHEAR CONNECTORS SHALL BE INSTALLED AFTER STRUCTURAL STEEL HAS BEEN ERECTED PRIOR TO PLACING DECK REINFORCEMENT.
3. STUDS TYPE 1 SHALL BE USED FOR MEMBERS BG1, S1, S2 FB0, FB3 AND FB6.
4. STUDS TYPE 2 SHALL BE USED FOR MEMBERS BG2, S3 AND FB1.
5. FOR LOCATION OF DIAPHRAGM TYPES "D1" AND "D2", SEE BASCULE SPAN FRAMING PLAN ON DWG. B154.

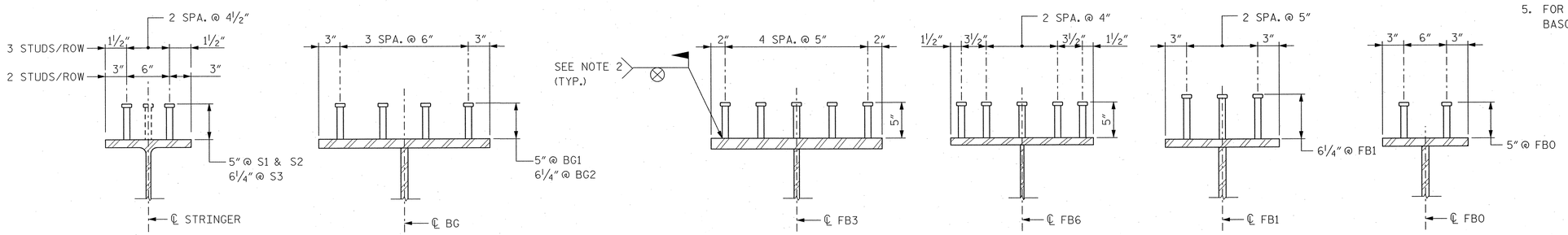

STRINGERS | BASCULE GIRDERS | FLOORBEAM FB3 | FLOORBEAM FB6 | FLOORBEAMS FB1 | FLOORBEAMS FB0

SHEAR CONNECTOR WELDING

PROJECT NO. B-2532

CRAVEN COUNTY

STATION: 31+21.29 -L-

NORTH CAROLINA PROFESSIONAL SEAL 12916 ENGINEER PAUL J. BARBER 10/03/06

STATE OF NORTH CAROLINA
DEPARTMENT OF TRANSPORTATION
RALEIGH, NC

BASCULE SPAN "N"
MISCELLANEOUS
STEEL DETAILS

HNTB NORTH CAROLINA, P.C.
343 E. Six Forks Rd., Suite 200, Raleigh, N.C. 27609

DRAWN BY SPL DATE 10/06
CHECKED BY JN DATE 10/06

DWG. NO. B176

REVISIONS						SHEET NO.
NO.	BY	DATE	NO.	BY	DATE	S-197
1			3			TOTAL SHEETS
2			4			348

Tella - AT WOOD72
02-OCT-2006 14:46
User:cunningham0243 Alfred Cunningham\DGN 1002: Submission\B2532_SD_B176_Miscsfdet.dgn

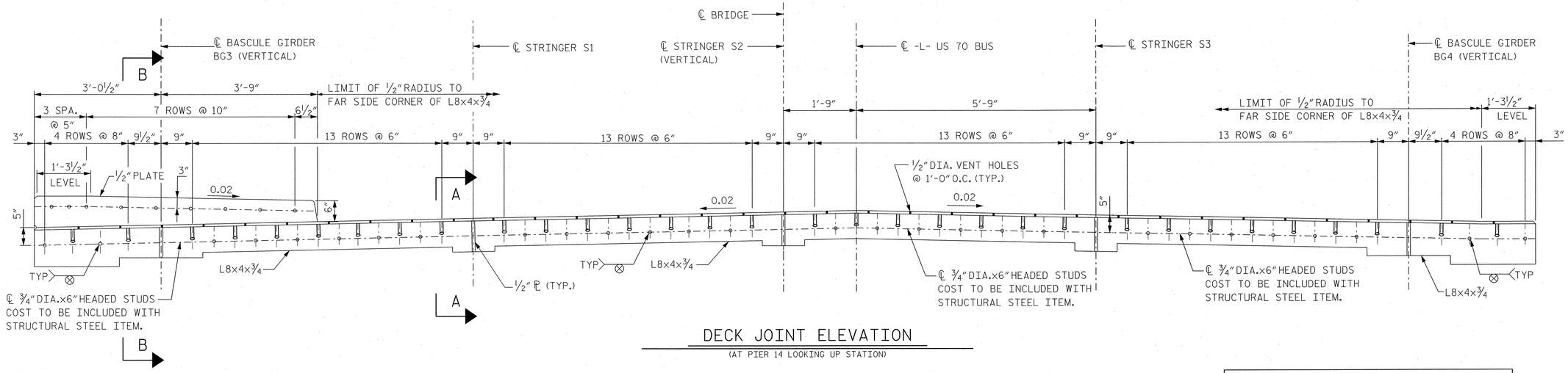

DECK JOINT ELEVATION

(AT PIER 14 LOOKING UP STATION)

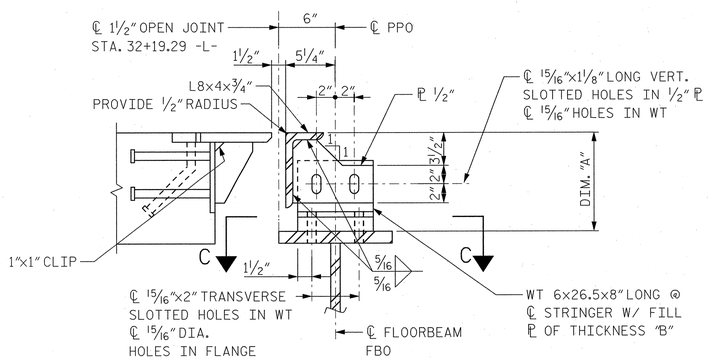

SECTION A-A

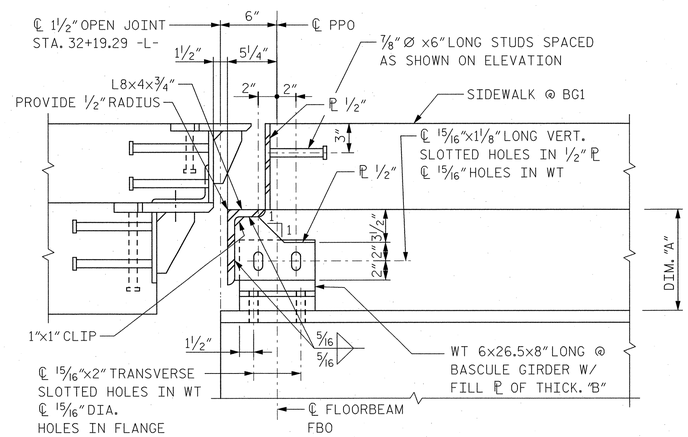

SECTION B-B

DECK JOINT DIMENSIONS		
LOCATION	DIMENSION "A"	THICKNESS "B"
NORTH BASCULE		
S1	9½"	½"
S2	9"	-
S3	9⅜"	⅜"
BG3	9 13/16"	13/16"
BG4	10⅜"	1⅜"
SOUTH BASCULE		
S1	9¾"	¾"
S2	9¼"	¼"
S3	9 9/16"	9/16"
BG1	10 1/16"	1 1/16"
BG2	10⅝"	1⅝"

NOTES:

1. FOR STRUCTURAL STEEL NOTES, SEE DWG. B154.
2. ARMORED DECK JOINT DETAILS FOR NORTH BASCULE SPAN SHOWN, SOUTH BASCULE SPAN BASCULE SPAN SIMILAR.
3. ALL DECK JOINT STEEL SHALL BE BLAST CLEANED AND METALLIZED TO A MIN. THICKNESS OF 8 MILS. SEE SPECIAL PROVISIONS FOR THERMAL SPRAYED COATINGS (METALLIZATION).

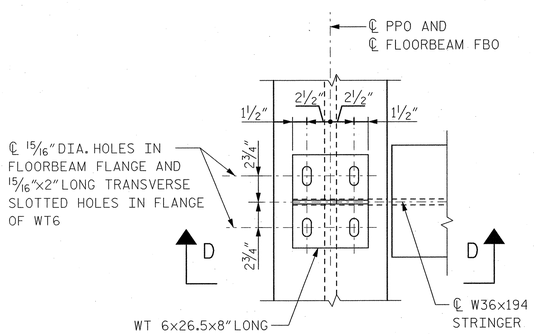

SECTION C-C

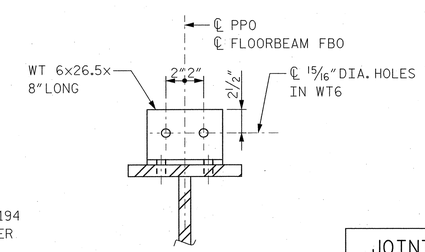

SECTION D-D

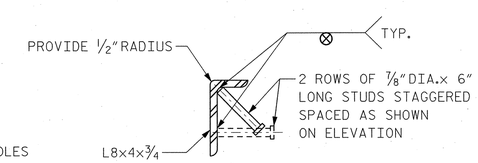

STUD DETAIL

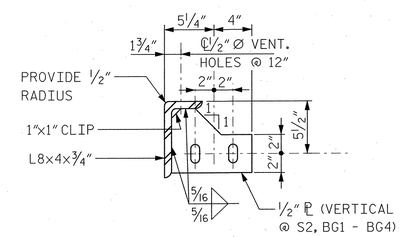

PLATE DETAIL

JOINT OPENING	
TEMPERATURE	OPENING
30°F	1"
60°F	1½"
90°F	1¾"

BILL OF MATERIALS DECK JOINT AT PPO		
LOCATION	STRUCTURAL STEEL (APPROX. LBS)	HEADED STUDS (UNIT)
NORTH BASCULE SPAN	1,316	69
SOUTH BASCULE SPAN	1,343	69

NOTE: QUANTITIES ARE FOR THE DECK JOINT AT PPO ONLY.

PROJECT NO. B-2532

CRAVEN COUNTY

STATION: 31+21.29 -L-

STATE OF NORTH CAROLINA
DEPARTMENT OF TRANSPORTATION
RALEIGH, NC

BASCULE SPAN "N"
DECK JOINT DETAILS AT PPO

NORTH CAROLINA PROFESSIONAL SEAL 12916 ENGINEER PAUL J. BARBER 10/20/06

HNTB NORTH CAROLINA, P.C.
343 E. Six Forks Rd., Suite 200, Raleigh, N.C. 27609

DRAWN BY SPL DATE 10/06
CHECKED BY GT DATE 10/06
DWG. NO. B177

REVISIONS						SHEET NO.
NO.	BY	DATE	NO.	BY	DATE	S-198
1			3			TOTAL SHEETS
2			4			348

jelio AT W10072
10/20/2006 12:06:12 PM
J:\cadd\42873 - Alfred Cunningham\OSHA 100% Submission\B2532_SD_B177_Deck Joint PPO.dgn

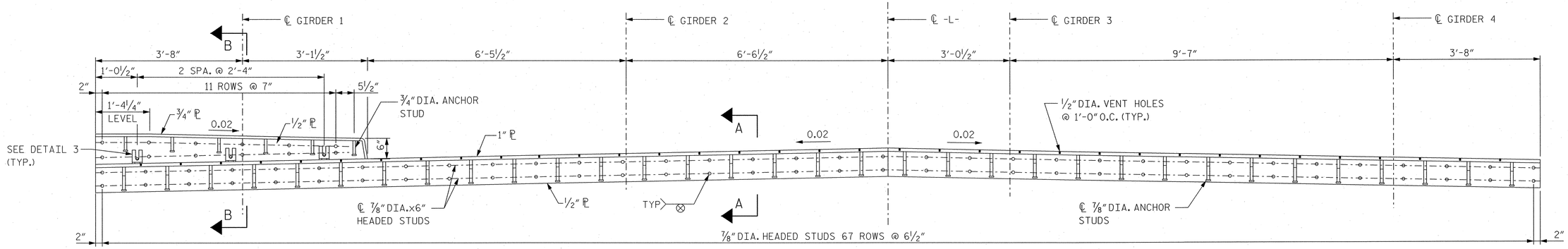

DECK JOINT ELEVATION

(AT PIER 13 LOOKING UP STATION)

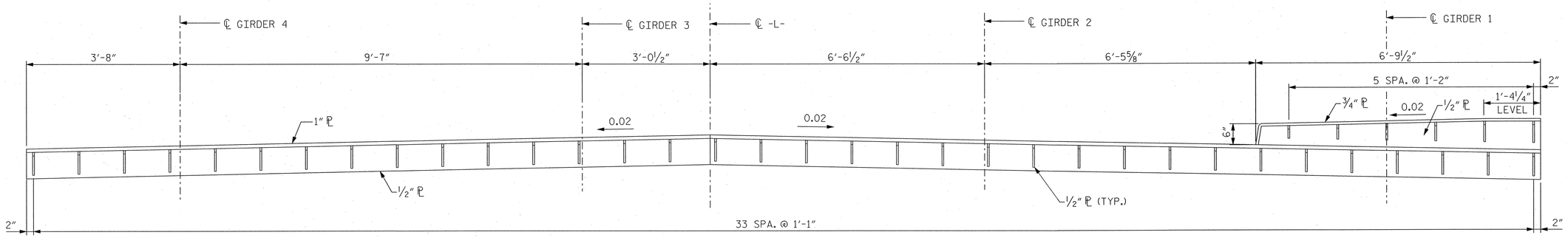

DECK JOINT ELEVATION

(AT PIER 13 LOOKING DOWN STATION)

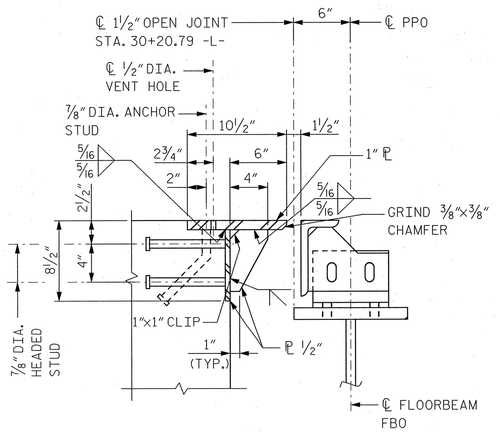

SECTION A-A

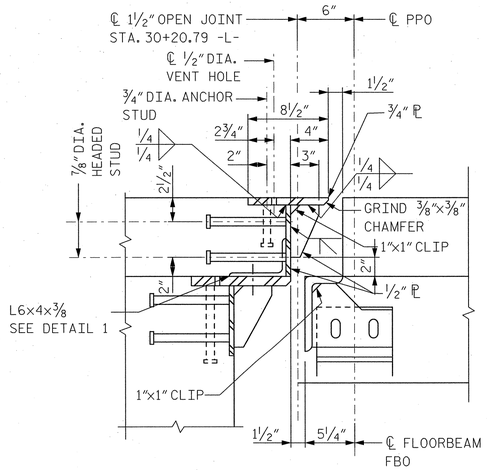

SECTION B-B

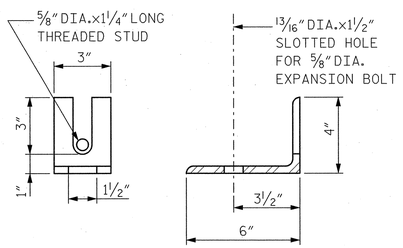

DETAIL 1

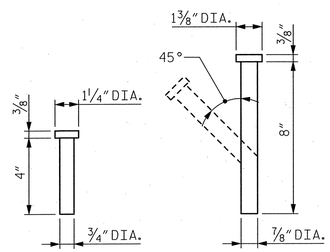

ANCHOR STUD DETAIL

BILL OF MATERIALS DECK JOINT AT PPO		
LOCATION	STRUCTURAL STEEL (APPROX. LBS)	HEADED STUDS (UNIT)
APPROACH SOAN "M"	2,150	119
APPROACH SPAN "O"	2,150	119

NOTES:

1. ALL STEEL SHALL BE AASHTO M270, GRADE 50 (ASTM A709, GRADE 50), BLAST CLEANED AND METALLIZED TO A MIN. THICKNESS OF 8 MILS. SEE SPECIAL PROVISIONS FOR THERMAL SPRAYED COATINGS.
2. AUTOMATIC END-WELDED STUDS SHALL BE INSTALLED PRIOR TO METALLIZATION OF ASSEMBLY.
3. ARMORED DECK JOINT DETAILS FOR SPAN "M" SHOWN, SPAN "O" SIMILAR.

PROJECT NO. B-2532

CRAVEN COUNTY

STATION: 31+21.29 -L-

NORTH CAROLINA PROFESSIONAL SEAL 12916 ENGINEER PAUL J. BARBER 10/13/06

STATE OF NORTH CAROLINA
DEPARTMENT OF TRANSPORTATION
RALEIGH, NC

APPROACH SPANS "M" & "O"
DECK JOINT DETAILS AT PPO

HNTB NORTH CAROLINA, P.C.
343 E. Six Forks Rd., Suite 200, Raleigh, N.C. 27609

DRAWN BY SL DATE 10/06
CHECKED BY GT DATE 10/06
DWG. NO. B177A

REVISIONS						SHEET NO.
NO.	BY	DATE	NO.	BY	DATE	S-199
1			3			TOTAL SHEETS
2			4			348

hello AT NYDOT2
02-OCT-2006 16:42
pw:\\dot4\dot3 - Alfred Cunningham\DSN 1 (X0): Submission\B2532_SD_B177A_ApprDeckJointPPO.dgn

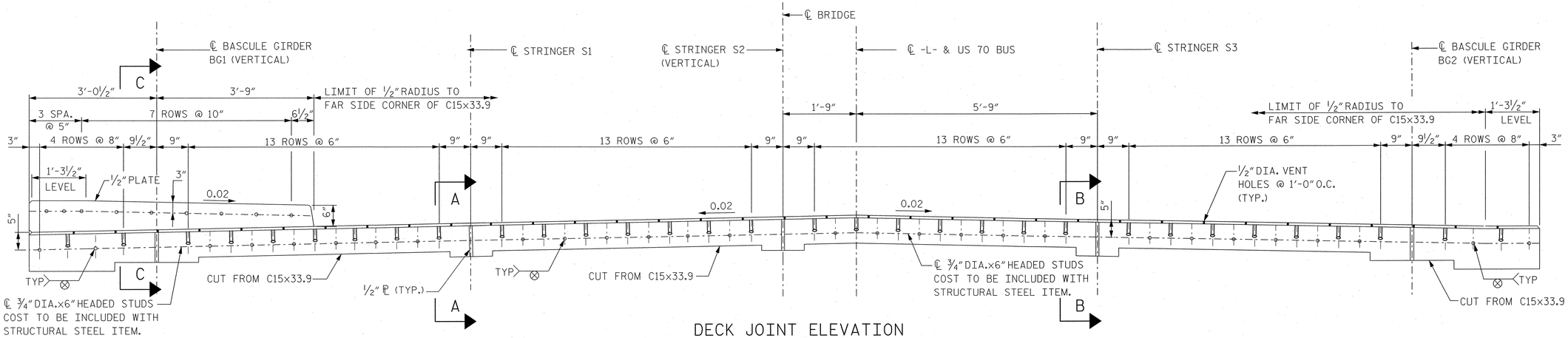

DECK JOINT ELEVATION

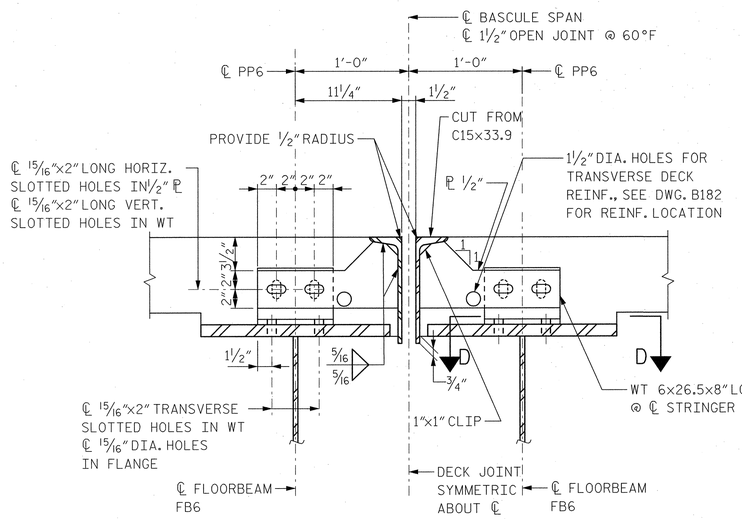

SECTION A-A

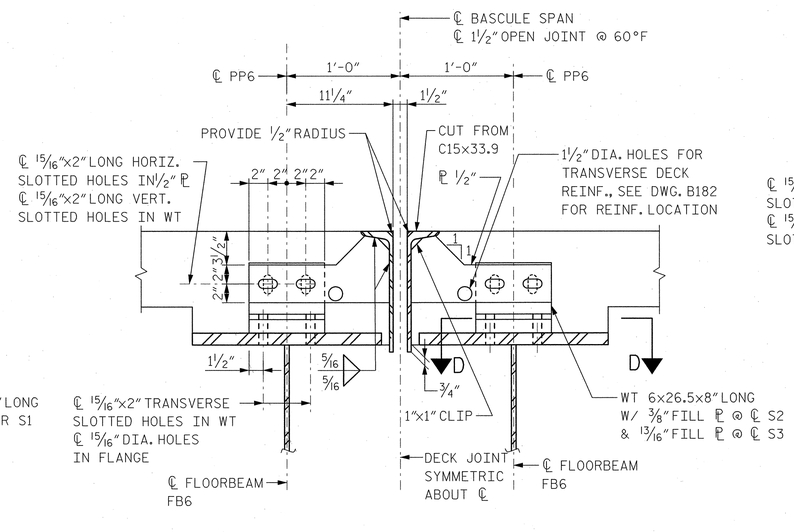

SECTION B-B

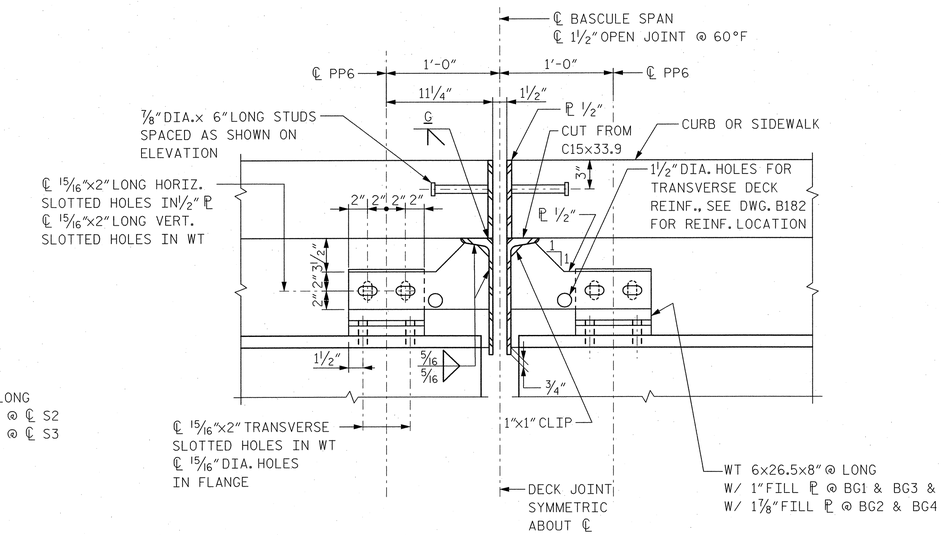

SECTION C-C

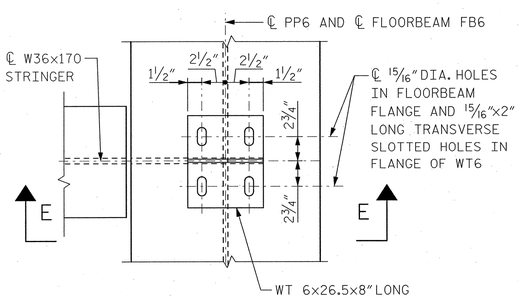

SECTION D-D

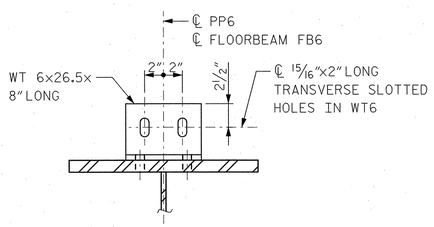

SECTION E-E

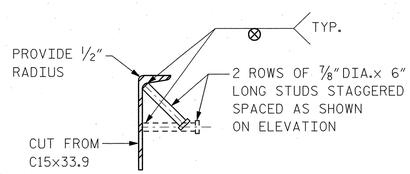

STUD DETAIL

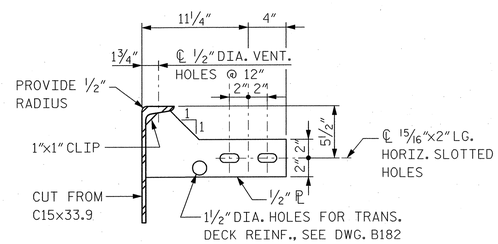

PLATE DETAIL

PROJECT NO. B-2532

CRAVEN **COUNTY**

STATION: 31+21.29 -L-

JOINT OPENING	
TEMPERATURE	OPENING
30°F	1⅛"
60°F	1½"
90°F	1⅞"

BILL OF MATERIALS DECK JOINT AT PP6		
LOCATION	STRUCTURAL STEEL (APPROX. LBS)	HEADED STUDS (UNIT)
NORTH BASCULE SPAN	1,558	69
SOUTH BASCULE SPAN	1,558	69

NOTE: QUANTITIES ARE FOR THE DECK JOINT AT PP6 ONLY.

NOTES:

1. FOR STRUCTURAL STEEL NOTES, SEE DWG. B154.
2. ALL DECK JOINT STEEL SHALL BE BLAST CLEANED ADD METALLIZED TO A MIN. THICKNESS OF 8 MILS. SEE SPECIAL PROVISIONS FOR THERMAL SPRAYED COATINGS (METALLIZATION).

NORTH CAROLINA PROFESSIONAL SEAL 12916 ENGINEER PAUL J. BARGER 10/24/06

STATE OF NORTH CAROLINA
DEPARTMENT OF TRANSPORTATION
RALEIGH, NC

BASCULE SPAN "N"
DECK JOINT DETAILS AT PP6

HNTB NORTH CAROLINA, P.C.
343 E. Six Forks Rd., Suite 200, Raleigh, N.C. 27609

DRAWN BY SPL DATE 10/06
CHECKED BY GT DATE 10/06
DWG. NO. **B178**

REVISIONS						SHEET NO.
NO.	BY	DATE	NO.	BY	DATE	S-200
1			3			TOTAL SHEETS
2			4			348

Jobs JT_N10072
10/24/2006 2:20:26 PM
J:\cadd\42873 - Alfred Cunningham\DGN\100X_Submission\B2532_SD_B178_Deck_JointPP6.dgn

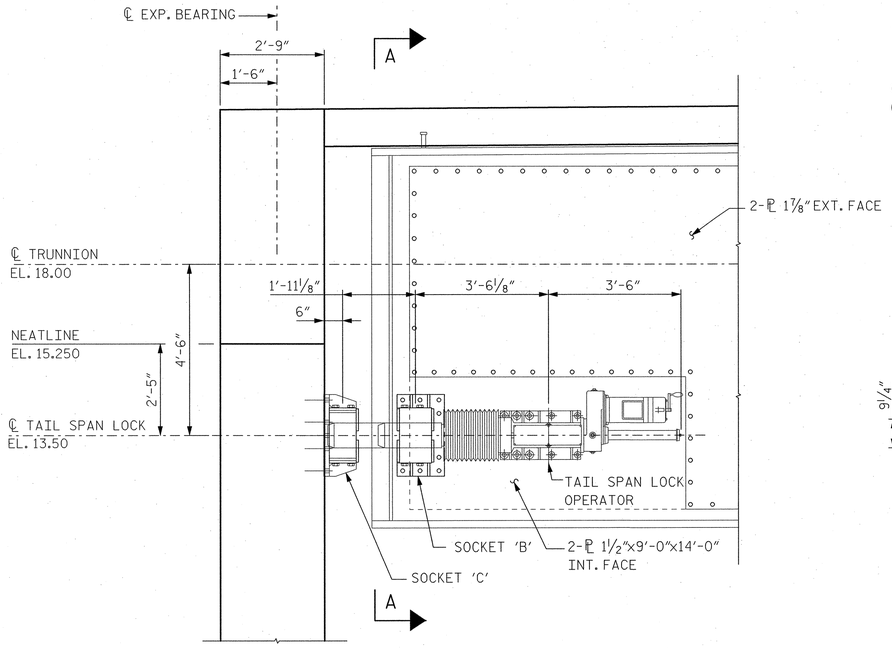

TAIL SPAN LOCK ELEVATION

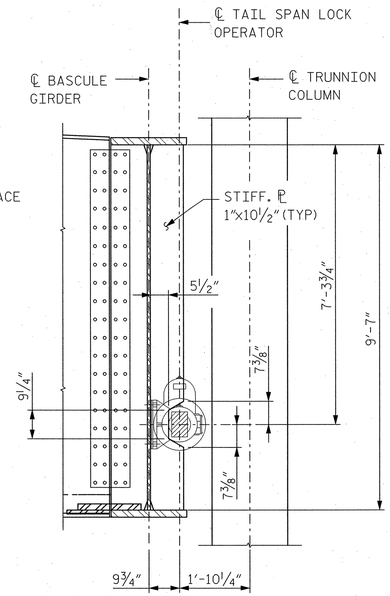

SECTION A-A

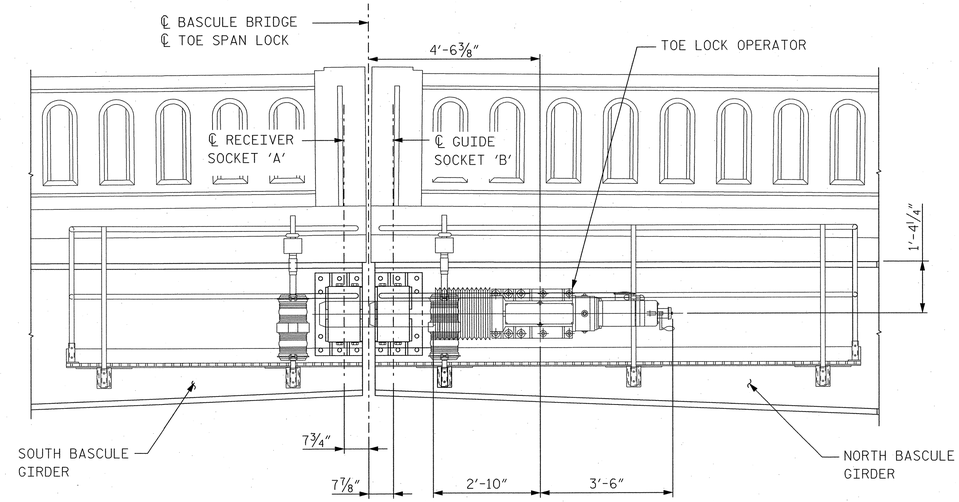

TOE SPAN LOCK ELEVATION

NOTES:

1. FOR STRUCTURAL STEEL NOTES SEE DWG. B153.
2. FOR BASCULE GIRDERS SEE DWG. B162.
3. BOTTOM SURFACES OF ALL BEARINGS AND SHOES TO BE PLANED, STRAIGHTENED OR OTHERWISE TREATED TO OBTAIN A TRUE PLANE SURFACE AS INDICATED. PLATE THICKNESS SHOWN ARE FINISHED DIMENSIONS.
4. INSTALL LIVE LOAD BEARING ASSEMBLY AFTER ALL CONCRETE IN COUNTERWEIGHT DECK, SIDEWALK AND PARAPETS HAVE BEEN POURED.
5. ANCHOR BOLTS SHALL BE ASTM F1554 GRADE 36.
6. PROVIDE SHIM PLATES OF THICKNESS INDICATED, PLUS ADDITIONAL SHIM PACKS MADE UP OF PLATES OF VARYING THICKNESS TO PROVIDE 1/16" VARIATIONS TO SHIM PLATE THICKNESS INDICATED. EACH SHIM PACK TOTAL THICKNESS SHALL EQUAL THE CORRESPONDING SHIM PLATE THICKNESS.
7. COST OF LIVE LOAD BEARING ASSEMBLY TO BE INCLUDED IN PAY ITEM "STRUCTURAL STEEL".

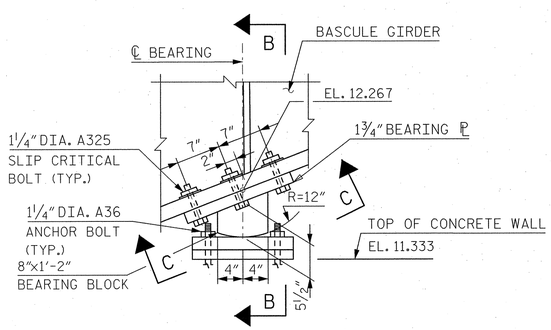

LIVE LOAD BEARING ELEVATION

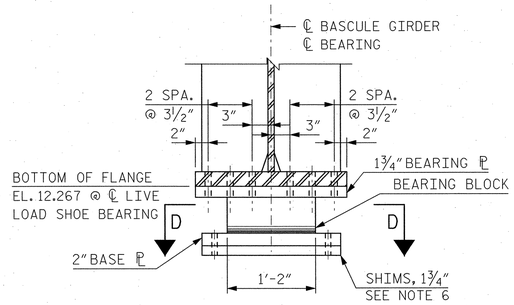

SECTION B-B

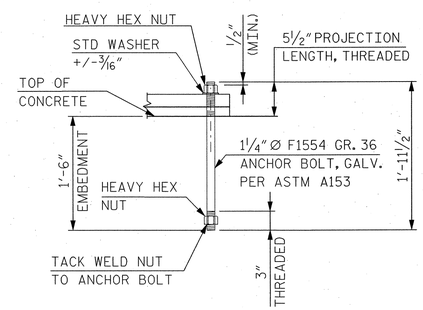

DETAIL 1

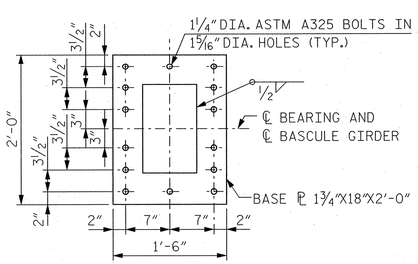

VIEW C-C

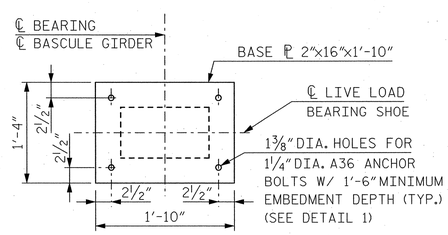

VIEW D-D

BILL OF MATERIALS LIVE LOAD SHOES	
LOCATION	STRUCTURAL STEEL (APPROX. LBS)
SOUTH BASCULE SPAN "N"	1,250
NORTH BASCULE SPAN "N"	1,250

NOTE: QUANTITIES ARE FOR LIVE LOAD SHOES ONLY.

PROJECT NO. B-2532

CRAVEN COUNTY

STATION: 31+21.29 -L-

NORTH CAROLINA PROFESSIONAL SEAL 12916 ENGINEER PAUL J. BARBER 10/3/06

STATE OF NORTH CAROLINA
DEPARTMENT OF TRANSPORTATION
RALEIGH, NC

BASCULE SPAN "N"
SPAN LOCK AND
LIVE LOAD SHOE DETAILS

HNTB NORTH CAROLINA, P.C.
343 E. Six Forks Rd., Suite 200, Raleigh, N.C. 27609

DRAWN BY PE DATE 10/06
CHECKED BY SL DATE 10/06

DWG. NO. B179

REVISIONS						SHEET NO.
NO.	BY	DATE	NO.	BY	DATE	S-201
1			3			TOTAL SHEETS
2			4			348

Tella AT NYQ0072
02-OCT-2006 17:14
J:\0006\42873 - Alfred Cunningham\DGN\1002_Submission\B2532_SD_B179_HnltgsandJK.dgn

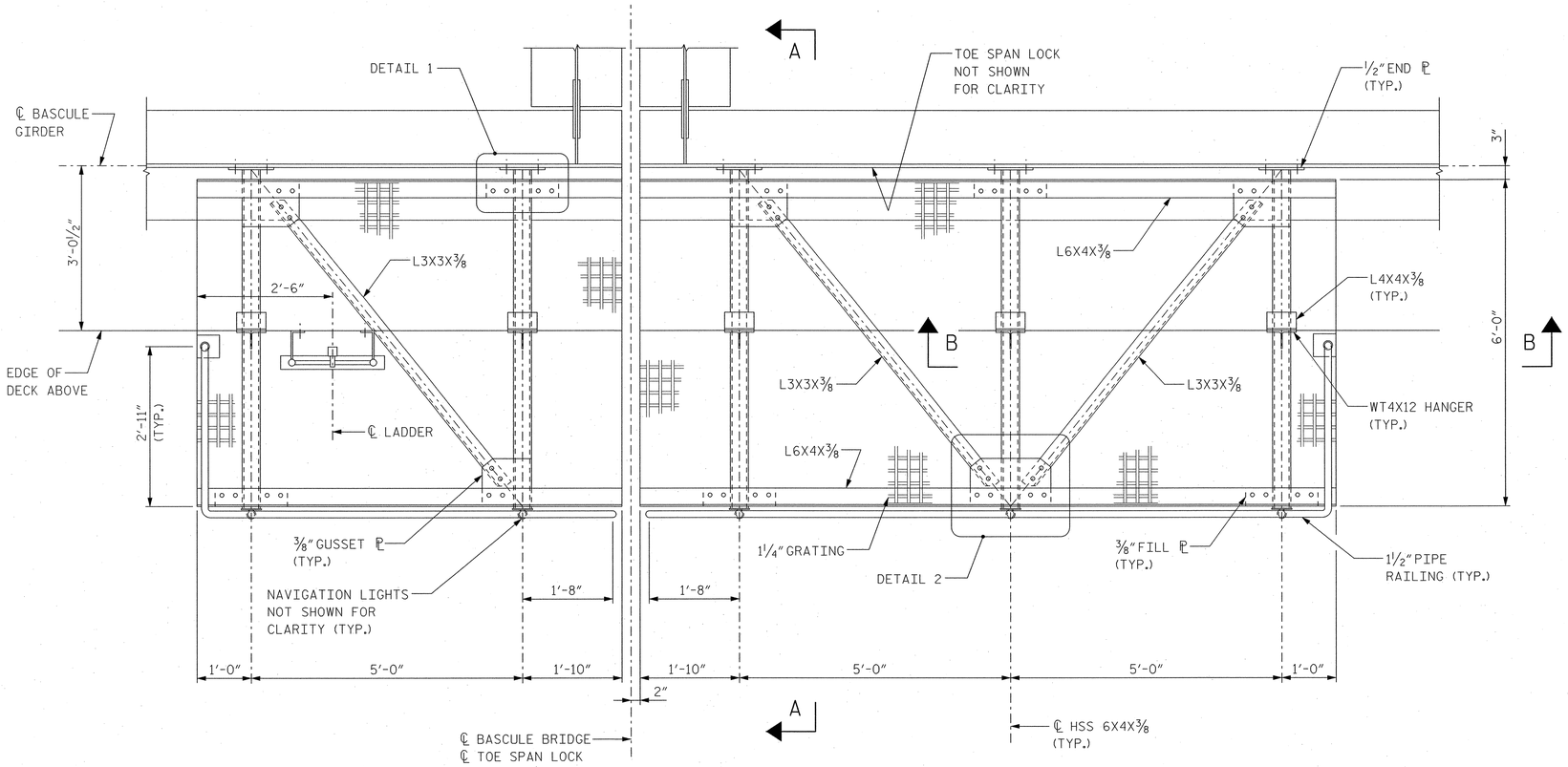

PLAN

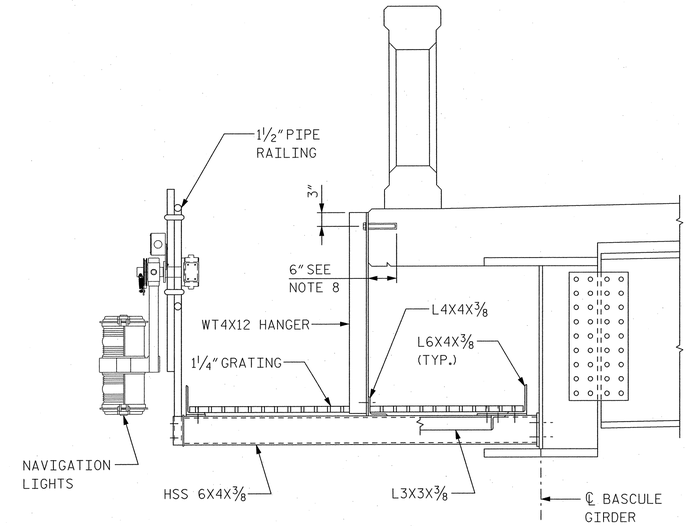

SECTION A-A

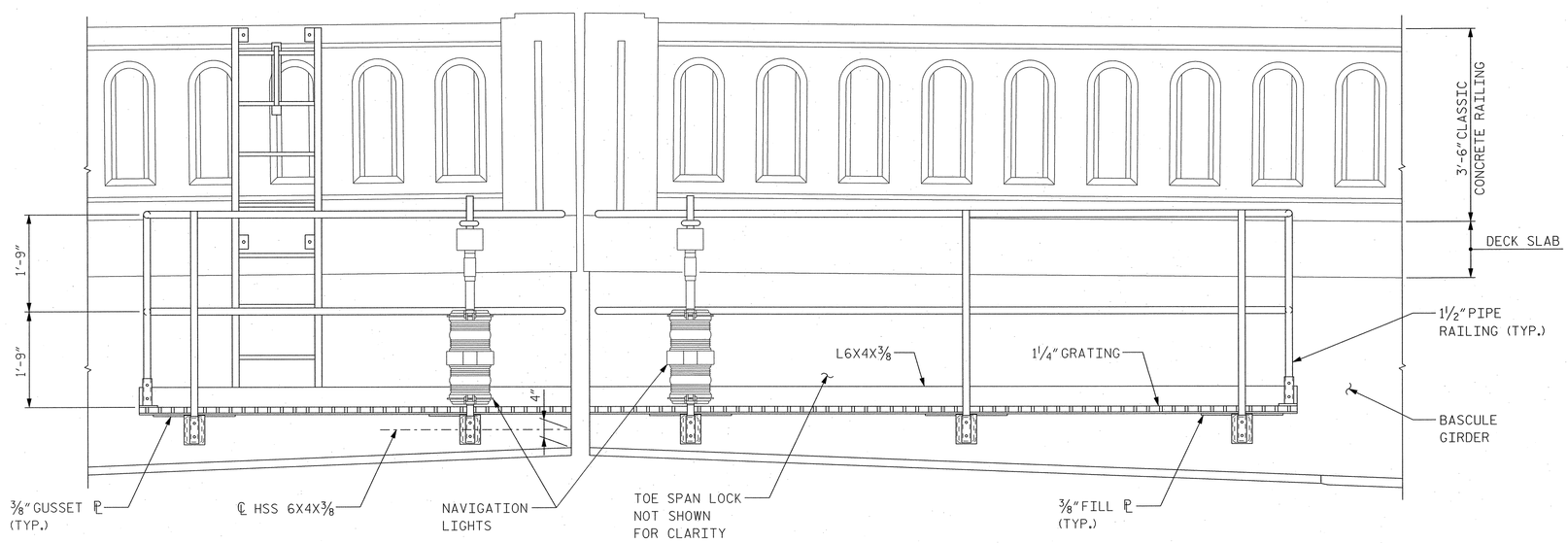

ELEVATION

NOTES:

1. ALL PLATFORM STRUCTURAL STEEL SHALL BE AASHTO M 270 (ASTM A 709), GRADE 50 AND PAINTED.
2. ALL PLATFORM RAILING AND LADDER PIPE SHALL BE 1 1/2" NOMINAL DIAMETER EXTRA STRONG PIPE CONFORMING TO ASTM A53 GRADE B, TYPE S AND PAINTED.
3. ALL PLATFORM TUBULAR STEEL SHALL BE ASTM A500 GRADE B AND PAINTED.
4. ALL PLATFORM BOLTS SHALL BE 3/4" DIA. AASHTO M 164 (ASTM A 325) UNLESS NOTED OTHERWISE.
5. ALL HIGH STRENGTH BOLTS SHALL BE HOT DIP GALVANIZED CONFORMING TO ASTM A 153.
6. PLATFORM GRATING SHALL BE WELDED STEEL GRID GRATING TYPE W/B WITH 1 1/4" x 1/4" BEARING BAR SIZE AT 1 3/16" CENTERS WITH CROSS BARS AT 4" CENTERS.
7. STEEL GRATING SHALL BE GALVANIZED PER ASTM A 123.
8. CORE DRILL 7/8" DIA. X 6" DEEP HOLE FOR 3/4" DIA. ANCHOR BOLT AND GROUT WITH KELIGROUT OR APPROVED EQUAL.
9. TOE SPAN LOCK PLATFORM ON EAST FASCIA SHOWN, PLATFORM ON WEST FASCIA SIMILAR.
10. FOR SECTION B AND DETAILS 1 AND 2, SEE DWG. B181.

PROJECT NO. B-2532

CRAVEN **COUNTY**

STATION: 31+21.29 -L-

NORTH CAROLINA PROFESSIONAL SEAL 12916 ENGINEER PAUL J. BARBER 10/3/06

STATE OF NORTH CAROLINA
DEPARTMENT OF TRANSPORTATION
RALEIGH, NC

BASCULE SPAN "N"
TOE SPAN LOCK
PLATFORM DETAILS - 1

HNTB NORTH CAROLINA, P.C.
343 E. Six Forks Rd., Suite 200, Raleigh, N.C. 27609

DRAWN BY DS DATE 10/06
CHECKED BY GT DATE 10/06
DWG. NO. **B180**

REVISIONS						SHEET NO.
NO.	BY	DATE	NO.	BY	DATE	S-202
1			3			TOTAL SHEETS
2			4			348

jelia AT NYDOT2
02-OCT-2006 14:56
s:\bridge\B2532_MFred Cunningham\DGN\1003_Submission\B2532_SD_B180_toelockplatform.dgn

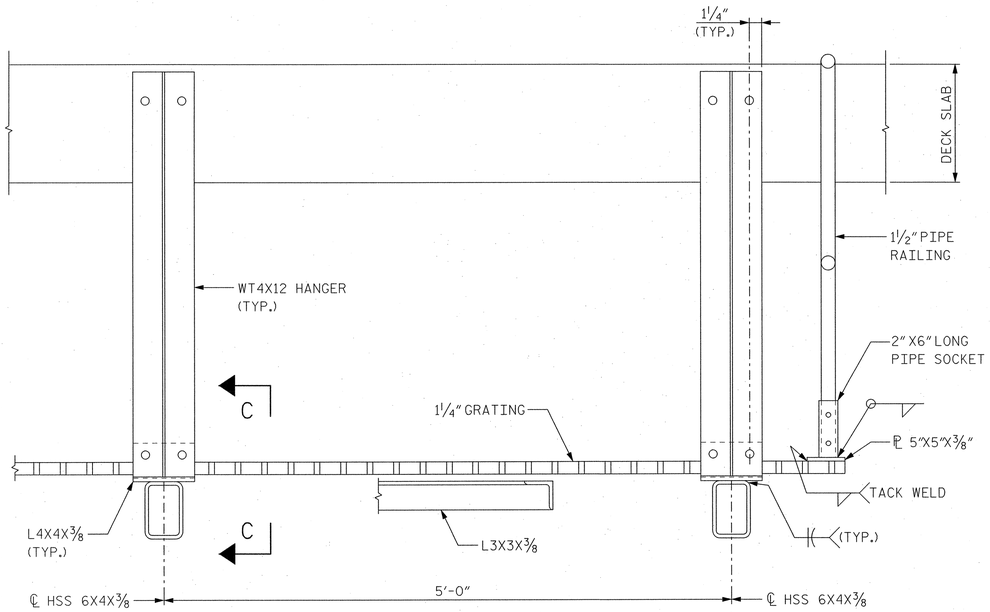

SECTION B-B

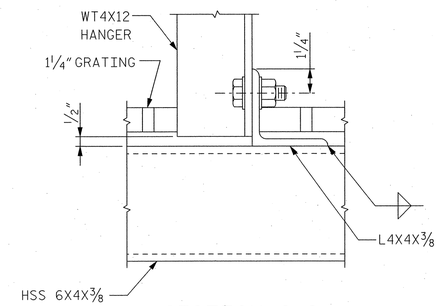

SECTION C-C

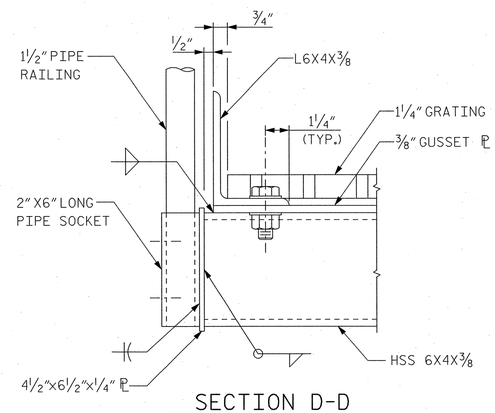

SECTION D-D

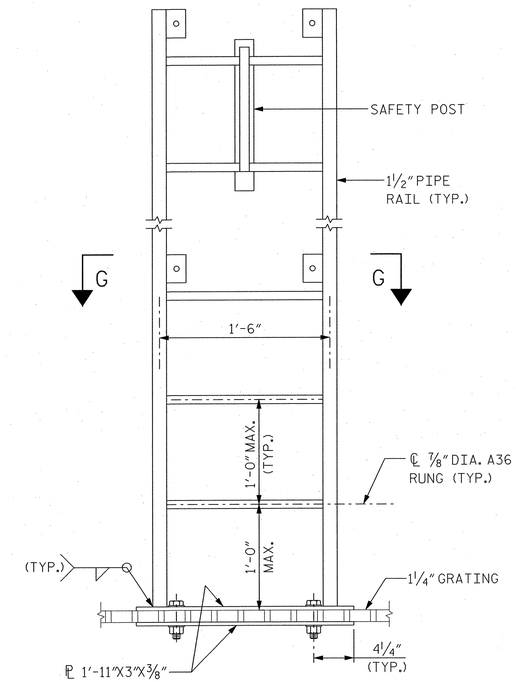

LADDER DETAIL

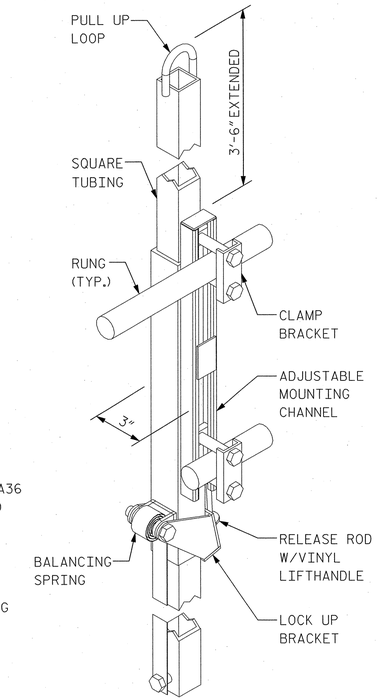

SAFETY POST

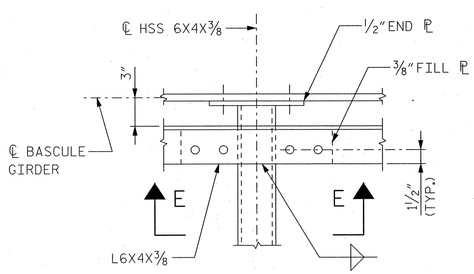

DETAIL 1

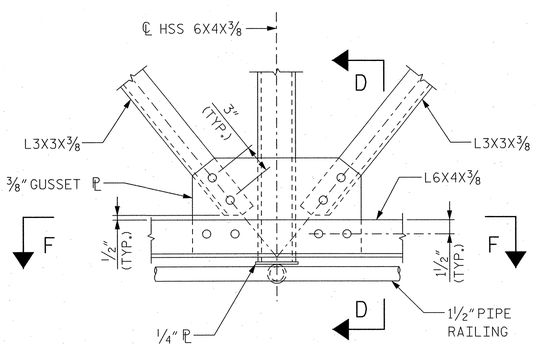

DETAIL 2

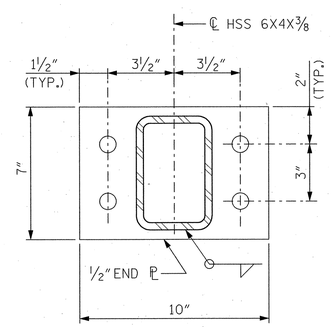

END PLATE DETAIL

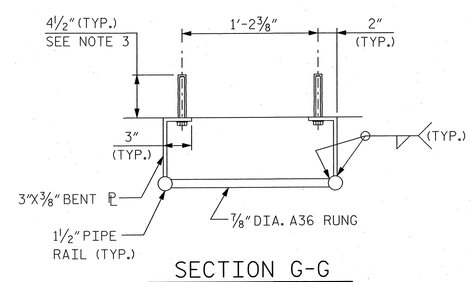

SECTION G-G

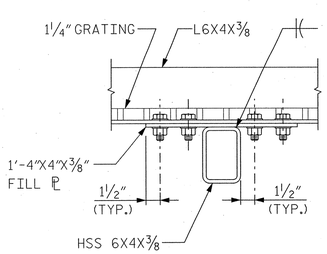

SECTION E-E

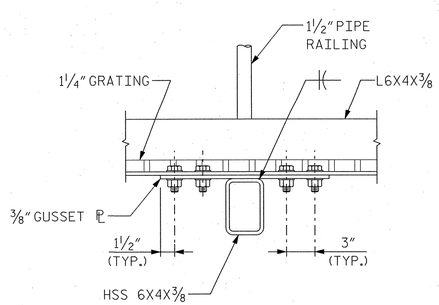

SECTION F-F

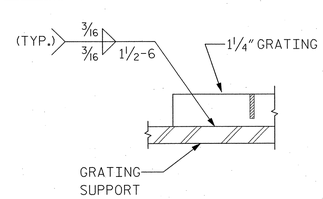

GRATING FASTENER DETAILS

BILL OF MATERIALS TOE PLATFORM	
LOCATION	STRUCTURAL STEEL (APPROX. LBS)
SOUTH BASCULE SPAN	2,544
NORTH BASCULE SPAN	3,990

NOTE: QUANTITIES ARE FOR TOE SPAN LOCK PLATFORMS AND LADDERS AT CENTERLINE OF BASCULE SPAN ONLY.

NOTES:

1. FOR LOCATION OF SECTION B-B AND DETAILS 1 AND 2, SEE DWG. B180.
2. FOR GENERAL PLATFORM NOTES, SEE DWG. B180.
3. CORE DRILL ⅝" DIA. x 4½" DEEP HOLE FOR 1½" DIA. ANCHOR BOLT AND EPOXY PER ADHESIVE ANCHOR SPECIFICATIONS.

NORTH CAROLINA PROFESSIONAL SEAL 12916 ENGINEER PAUL J. BARBER 10/3/06

PROJECT NO. B-2532

CRAVEN COUNTY

STATION: 31+21.29 -L-

STATE OF NORTH CAROLINA
DEPARTMENT OF TRANSPORTATION
RALEIGH, NC

BASCULE SPAN "N"
TOE SPAN LOCK
PLATFORM DETAILS - 2

HNTB
HNTB NORTH CAROLINA, P.C.
343 E. Six Forks Rd., Suite 200, Raleigh, N.C. 27609

DRAWN BY DS DATE 10/06
CHECKED BY GT DATE 10/06
DWG. NO. B181

REVISIONS						SHEET NO.
NO.	BY	DATE	NO.	BY	DATE	S-203
1			3			TOTAL SHEETS
2			4			348

Jello AT NYDOT72
02-OCT-2006 17:14
J:\0001\48873 - Alfred Cunningham\CON 100% Submission\B2532_SD_B181_BeltockPlatform.dgn

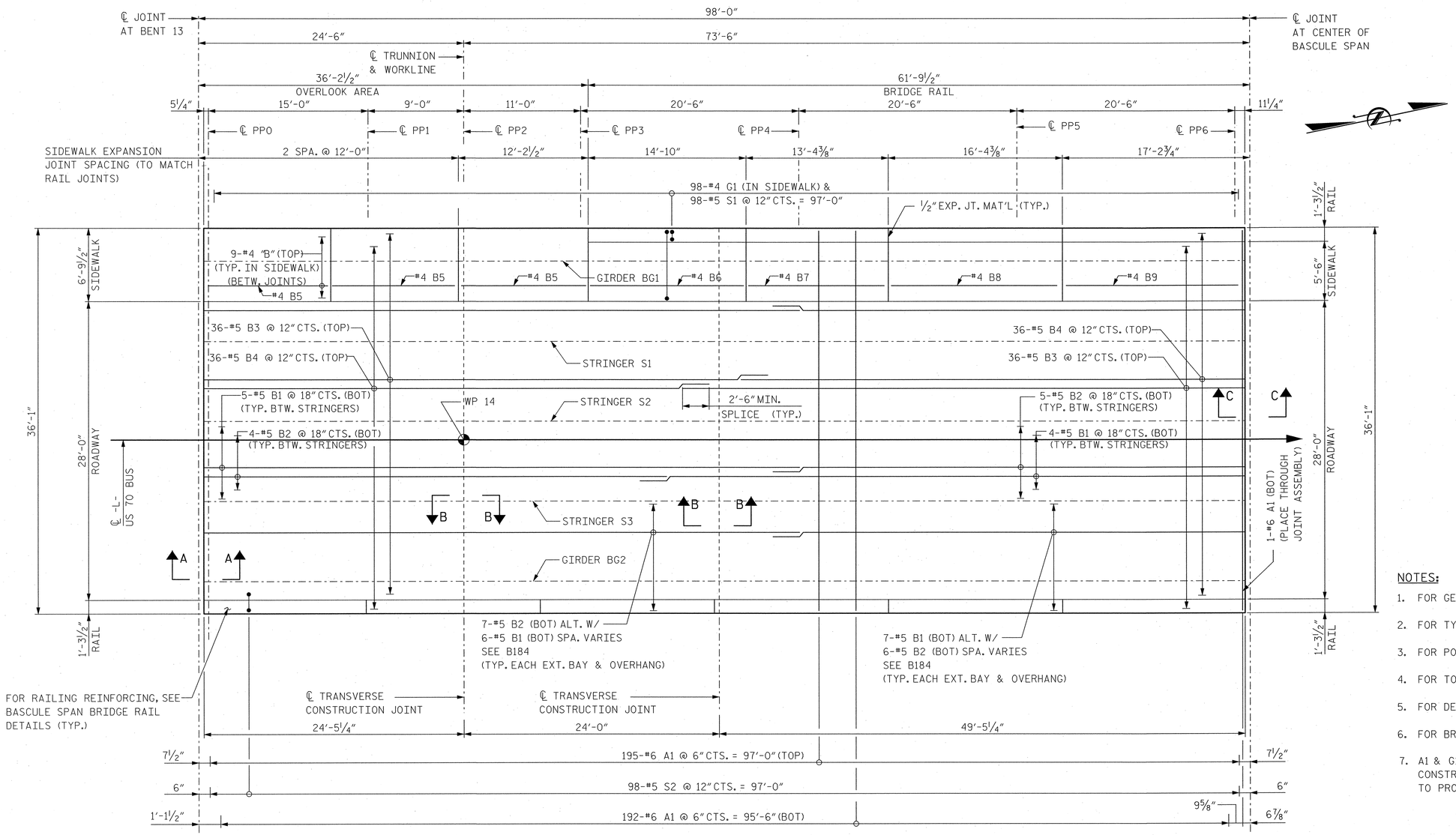

BASCULE PLAN OF SPAN "N" - SOUTH BASCULE LEAF

NOTES:

1. FOR GENERAL NOTES, SEE DWG. B104.
2. FOR TYPICAL DECK CROSS SECTION, SEE DWG. B103.
3. FOR POURING SEQUENCE, SEE DWG. B185.
4. FOR TOP OF SLAB ELEVATIONS, SEE DWG. B185.
5. FOR DECK BAR LIST AND BILL OF MATERIALS, SEE DWG. B198.
6. FOR BRIDGE RAILING DETAILS, SEE DWGS. B186 AND B187.
7. A1 & G1 BARS MAY BE SHIFTED SLIGHTLY AT TRANSVERSE CONSTRUCTION JOINTS OR SIDEWALK CONTRACTION JOINTS TO PROVIDE ADEQUATE CLEARANCE.

PROJECT NO. B-2532

CRAVEN COUNTY

STATION: 31+21.29 -L-

STATE OF NORTH CAROLINA
DEPARTMENT OF TRANSPORTATION
RALEIGH, NC

BASCULE SPAN "N"
SOUTH BASCULE LEAF
DECK PLAN

NORTH CAROLINA PROFESSIONAL ENGINEER SEAL 12916 PAUL J. BARBER 10/27/06

HNTB NORTH CAROLINA, P.C.
343 E. Six Forks Rd., Suite 200, Raleigh, N.C. 27609

DRAWN BY SPL DATE 10/X/2006
CHECKED BY SL DATE 10/X/2006

DWG. NO. B182

REVISIONS						SHEET NO.
NO.	BY	DATE	NO.	BY	DATE	S-204
1			3			TOTAL SHEETS
2			4			348

Tella - AT WY0072
02-OCT-2006 16:52
dgn:d:\SDS_3 - HTrad Cunningham\DGN\100X Submission\B2532_SD_B182_deckplanSBL.dgn

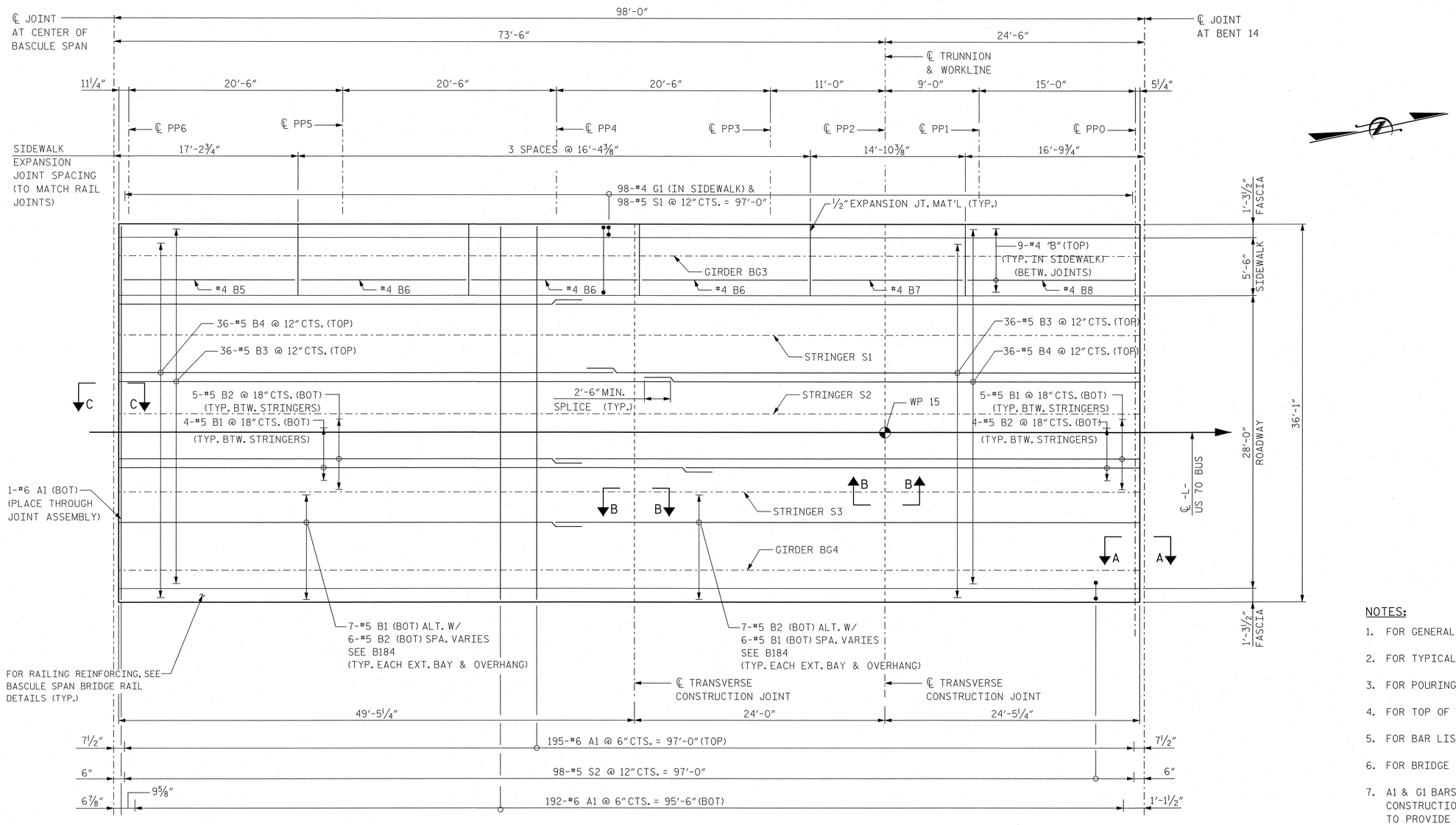

BASCULE PLAN OF SPAN "N" - NORTH BASCULE LEAF

NOTES:

1. FOR GENERAL NOTES, SEE DWG. B104.
2. FOR TYPICAL DECK CROSS SECTION, SEE DWG. B103.
3. FOR POURING SEQUENCE, SEE DWG. B185.
4. FOR TOP OF SLAB ELEVATIONS, SEE DWG. B185.
5. FOR BAR LIST AND BILL OF MATERIALS, SEE DWG. B198.
6. FOR BRIDGE RAILING DETAILS, SEE DWGS. B186 AND B187.
7. A1 & G1 BARS MAY BE SHIFTED SLIGHTLY AT TRANSVERSE CONSTRUCTION JOINTS OR SIDEWALK CONTRACTION JOINTS TO PROVIDE ADEQUATE CLEARANCE.

PROJECT NO. B-2532

CRAVEN **COUNTY**

STATION: 31+21.29 -L-

STATE OF NORTH CAROLINA
DEPARTMENT OF TRANSPORTATION
RALEIGH, NC

BASCULE SPAN "N"
NORTH BASCULE LEAF
DECK PLAN

NORTH CAROLINA PROFESSIONAL SEAL 12916 ENGINEER PAUL J. BARBER 10/20/06

HNTB NORTH CAROLINA, P.C.
343 E. Six Forks Rd., Suite 200, Raleigh, N.C. 27609

DRAWN BY SPL DATE 10/06
CHECKED BY SL DATE 10/06

DWG. NO. **B183**

REVISIONS						SHEET NO.
NO.	BY	DATE	NO.	BY	DATE	S-205
1			3			TOTAL SHEETS
2			4			348

jelly AT NYI0072
19-OCT-2006 17:24
J:\cadd\42873 - Alfred Cunningham\DGN\100% Submission\B2532_SD_B183_deckplanNBL.dgn

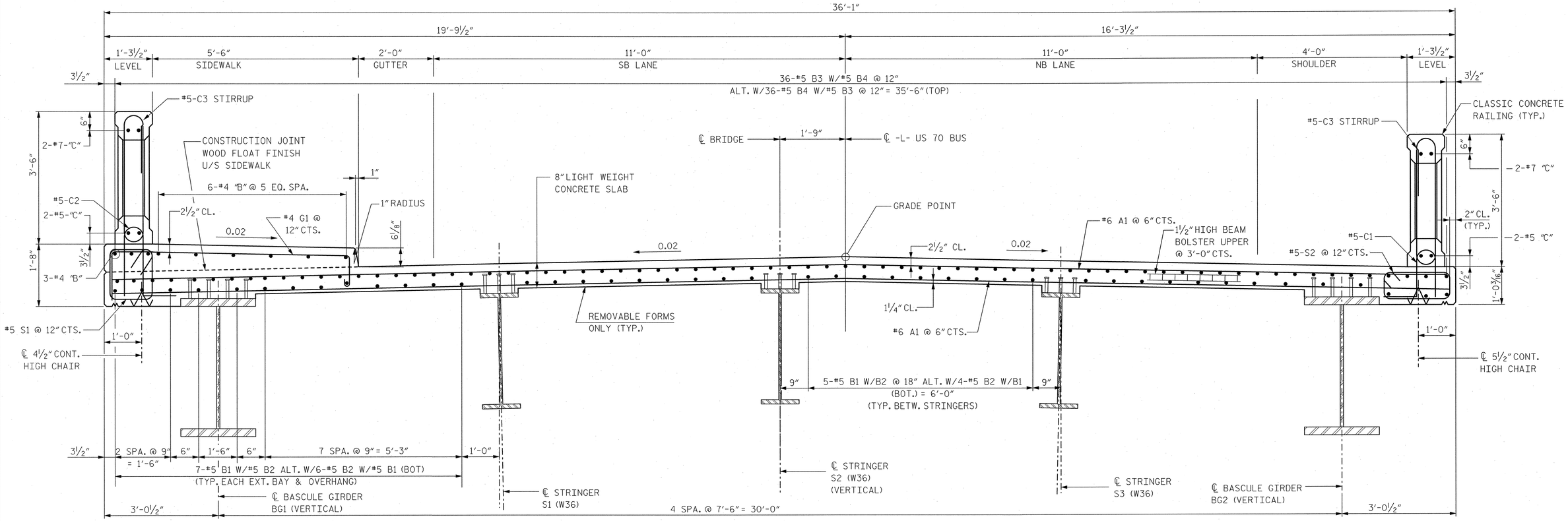

TYPICAL SECTION

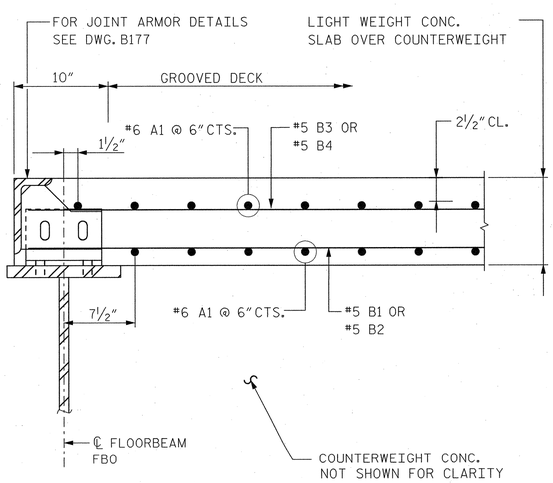

SECTION A-A

AT DECK JOINT PP0

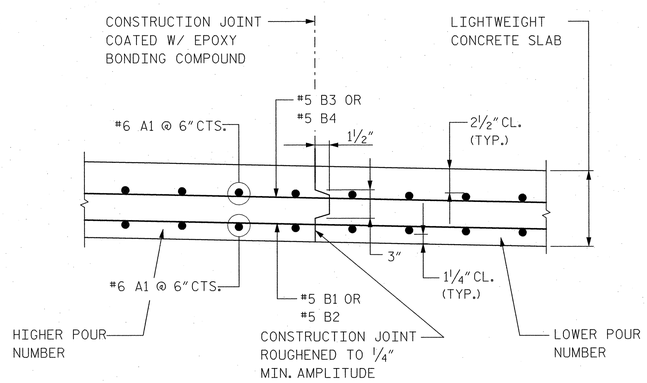

SECTION B-B

AT CONSTRUCTION JOINT

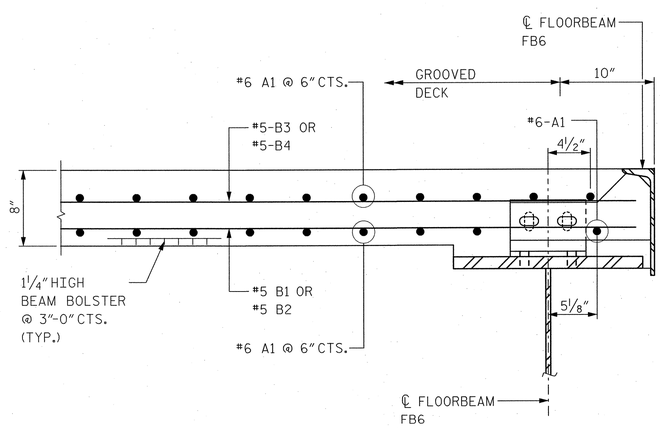

SECTION C-C

AT DECK JOINT PP6

NOTES:

1. FOR SOUTH AND NORTH BASCULE LEAF DECK PLAN, SEE DWGS. B182 AND B183 RESPECTIVELY.
2. FOR LOCATION OF SECTIONS A-A, B-B AND C-C, SEE DWGS. B182 AND B183.
3. FOR ADDITIONAL TYPICAL DECK SLAB DETAILS, SEE DWG. B103.
4. FOR CLASSIC CONCRETE RAILING DETAILS, SEE DWGS. B186 TO B187.
5. PROVIDE CONTINUOUS HIGH CHAIRS AT 3'-0" CENTERS ON TOP OF REMOVABLE FORMS TO SUPPORT BOTTOM MAT OF REINFORCEMENT A CLEAR DISTANCE OF 1 ¼" ABOVE THE TOP OF THE REMOVABLE FORM.

PROJECT NO. B-2532

CRAVEN **COUNTY**

STATION: 31+21.29 -L-

STATE OF NORTH CAROLINA
DEPARTMENT OF TRANSPORTATION
RALEIGH, NC

BASCULE SPAN "N"
DECK CROSS SECTION

NORTH CAROLINA PROFESSIONAL ENGINEER SEAL 12916 PAUL J. BARBER 10/3/16

HNTB NORTH CAROLINA, P.C.
343 E. Six Forks Rd., Suite 200, Raleigh, N.C. 27609

DRAWN BY SPL DATE 10/09/16
CHECKED BY JN DATE 10/09/16
DWG. NO. **B184**

REVISIONS						SHEET NO.
NO.	BY	DATE	NO.	BY	DATE	S-206
1			3			TOTAL SHEETS
2			4			348

jella AT N10072
DGN-CONTROL.dgn
USER(n42873 , Alfred Cunningham)OGN 10/2(Submission\B2532_SD_B184_DeckSection.dgn

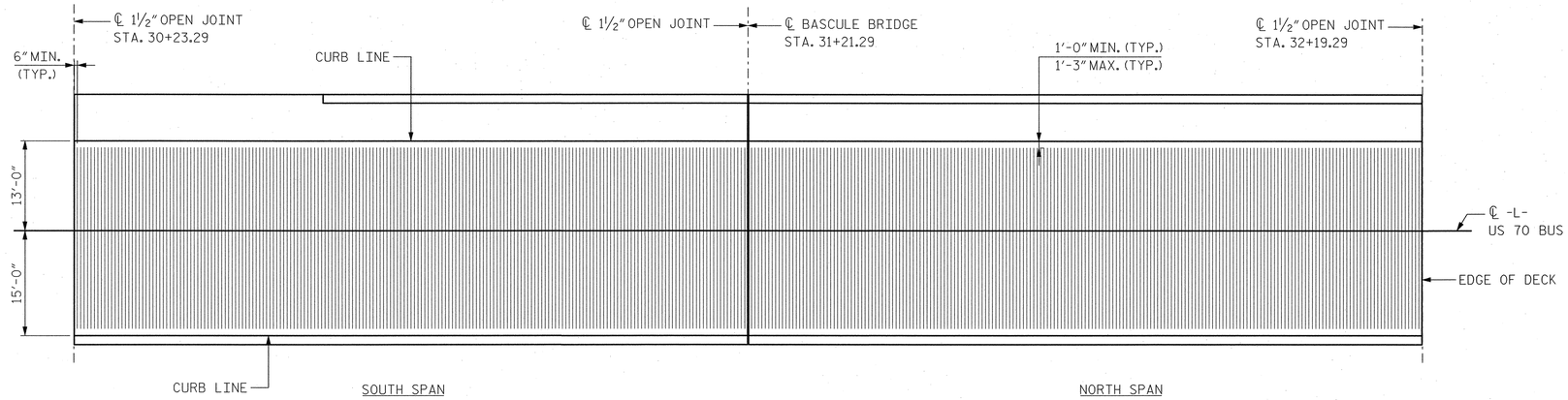

SAWCUT GROOVED DECK SURFACE

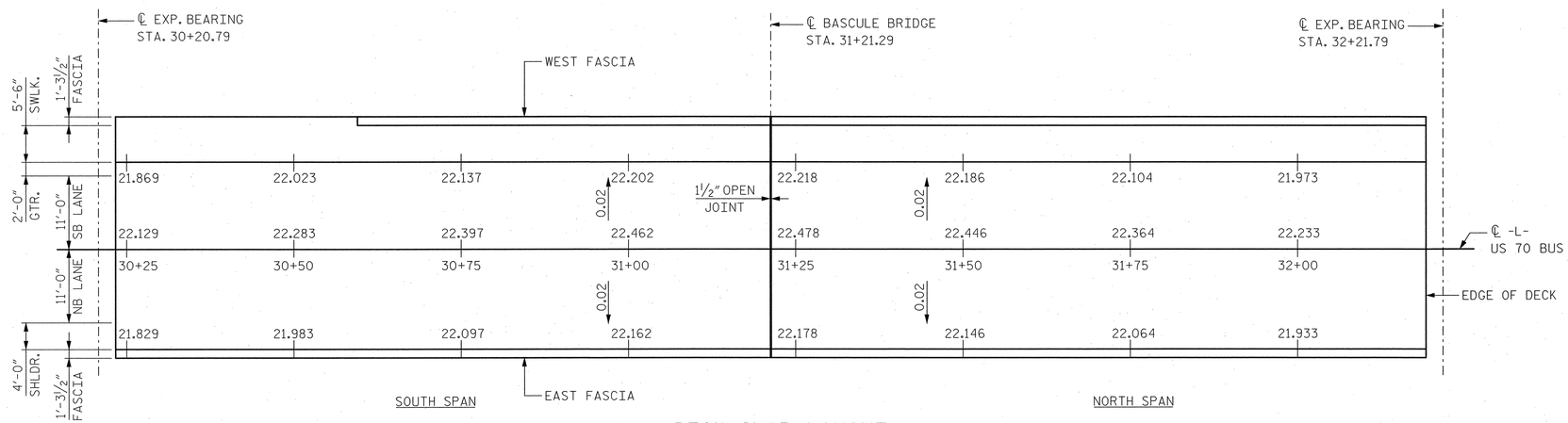

DECK SLAB LAYOUT

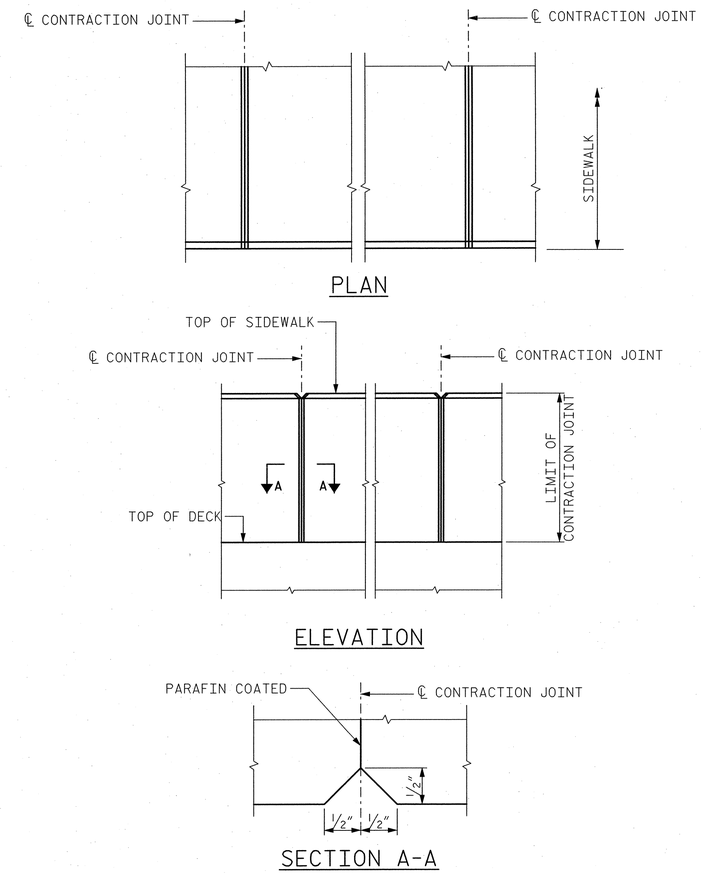

SIDEWALK JOINT DETAILS

NOTES:

1. ELEVATIONS ARE GIVEN AT 25 FT INCREMENTS ALONG THE PROPOSED GRADE DATA -L-.
2. FOR BILL OF MATERIALS AND SUMMARY OF QUANTITIES, SEE DWG. B198.
3. FOR LOCATION OF SIDEWALK CONTRACTION JOINTS, SEE DWGS. B182 AND B183.

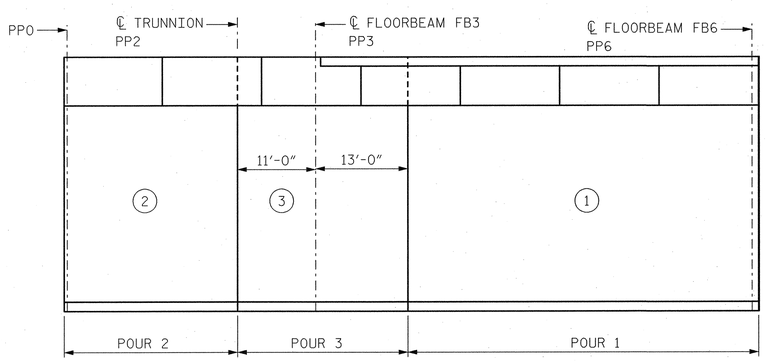

POURING SEQUENCE

SOUTH SPAN SHOWN NORTH SPAN SIMILAR

SPAN N EDGE OF DECK ELEVATIONS

LOCATION (SEE BELOW)	℄ PIER 13 OPEN JOINT	SOUTH BASCULE LEAF ℄ TRUNNION	℄ BRIDGE	NORTH BASCULE LEAF ℄ TRUNNION	℄ PIER 14 OPEN JOINT
A. WEST FASCIA	21.723	21.875	22.083	21.869	21.703
B. WEST CURBLINE	21.858	22.011	22.215	22.005	21.839
C. EDGE OF WEST GUTTER	21.898	22.051	22.259	22.045	21.879
D. ℄ OF BRIDGE	22.083	22.236	22.444	22.230	22.064
E. -L-	22.118	22.271	22.479	22.265	22.099
F. EDGE OF EAST SHLDER	21.898	22.051	22.259	22.045	21.879
G. EAST CURBLINE	21.818	21.971	22.179	21.965	21.799
H. EAST FASCIA	21.818	21.971	22.179	21.965	21.799

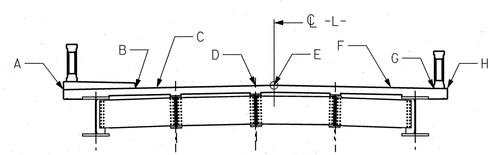

LOOKING NORTH

NORTH CAROLINA PROFESSIONAL SEAL 12916 ENGINEER PAUL J. BARBER 10/13/06

PROJECT NO. B-2532

CRAVEN COUNTY

STATION: 31+21.29 -L-

STATE OF NORTH CAROLINA
DEPARTMENT OF TRANSPORTATION
RALEIGH, NC

BASCULE SPAN "N"
DECK SLAB LAYOUT
AND JOINT DETAILS

HNTB NORTH CAROLINA, P.C.
343 E. Six Forks Rd., Suite 200, Raleigh, N.C. 27609

DRAWN BY SPL DATE 10/06
CHECKED BY SL DATE 10/06

DWG. NO. B185

REVISIONS						SHEET NO.
NO.	BY	DATE	NO.	BY	DATE	S-207
1			3			TOTAL SHEETS
2			4			348

Jella - AT WY0072
02-OCT-2006 14:57
v:\work\B2532_Alfred Cunningham\DGN\100% Submission\B2532_SD_B185_decklayout.dgn

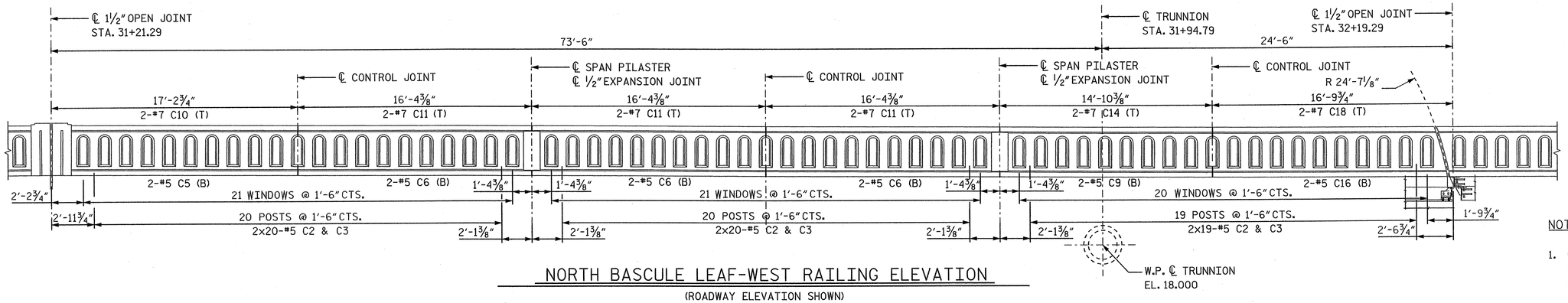

NORTH BASCULE LEAF-WEST RAILING ELEVATION

(ROADWAY ELEVATION SHOWN)

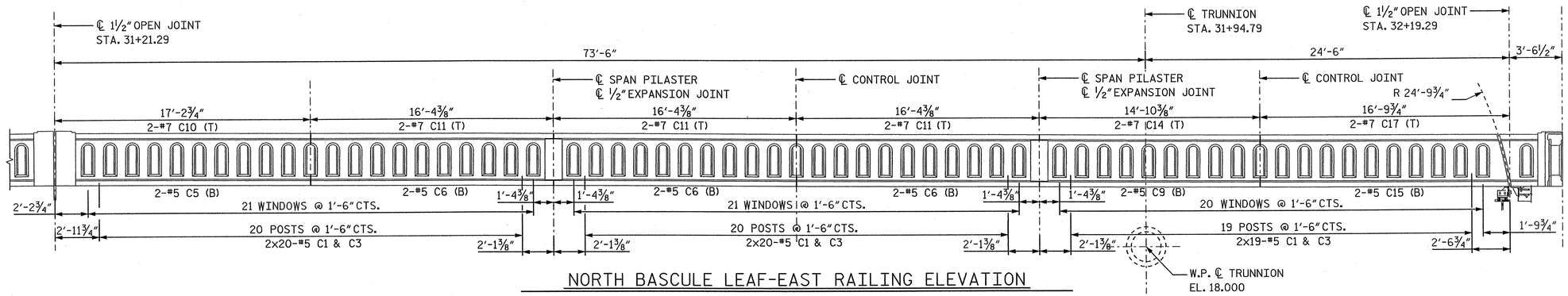

NORTH BASCULE LEAF-EAST RAILING ELEVATION

(EXTERIOR FASCIA ELEVATION SHOWN)

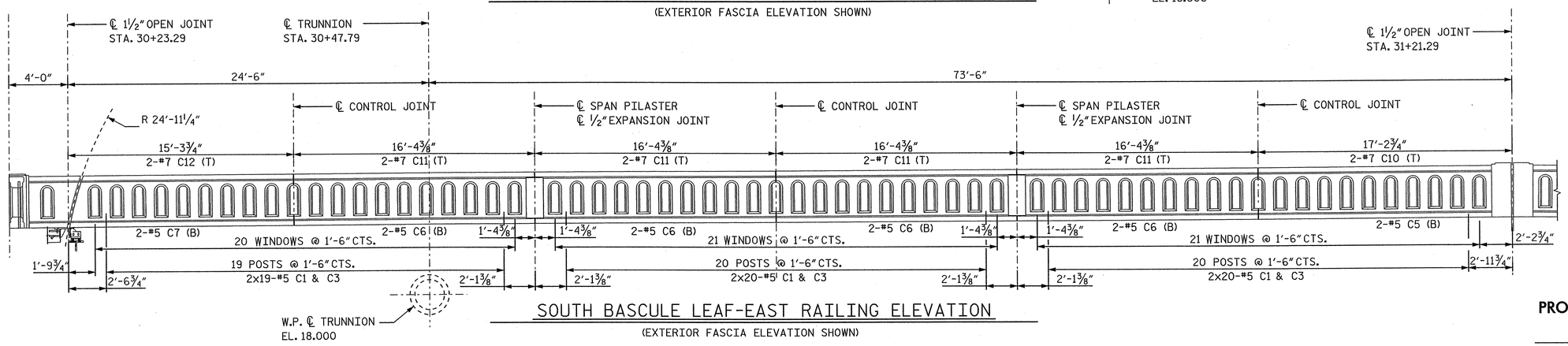

SOUTH BASCULE LEAF-EAST RAILING ELEVATION

(EXTERIOR FASCIA ELEVATION SHOWN)

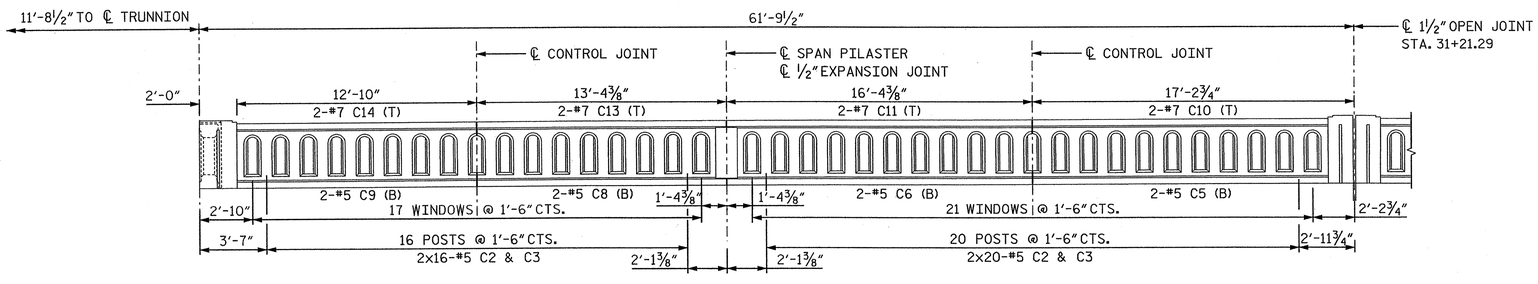

SOUTH BASCULE LEAF-WEST RAILING ELEVATION

(ROADWAY ELEVATION SHOWN)

NOTES:

1. CLASSIC CONCRETE BRIDGE RAILING ON SPAN "N" SHALL BE LIGHT WEIGHT CONCRETE WITH A MIN. COMPRESSIVE YIELD STRENGTH OF 4,500 PSI (*)
2. CLASSIC CONCRETE BRIDGE RAILING ON SPAN "N" SHALL BE NORMAL WEIGHT CLASS AA CONCRETE WITH A MIN. COMPRESSIVE YIELD STRENGTH OF 4,500 PSI (**)
3. ALL REINFORCING STEEL IN THE CLASSIC CONCRETE RAILING SHALL BE EPOXY COATED.
4. CLASSIC CONCRETE BRIDGE RAILING SHALL NOT BE CAST UNTIL ALL SLAB CONCRETE IN THE UNIT HAS BEEN CAST AND HAS REACHED A MINIMUM COMPRESSIVE STRENGTH OF 3,000 PSI.
5. WHEN EVAZOTE JOINT SEAL IS REQUIRED, THE JOINT IN THE DECK SHALL BE SAWED PRIOR TO CASTING OF THE CONCRETE RAIL.
6. FOR TYPICAL RAILING SECTIONS AND DETAILS, SEE DWG. B185.
7. FOR CONCRETE RAILING BAR LIST AND QUANTITIES, SEE DWG. B198.

(*) ON WEST FASCIA RAILINGS ON BOTH NORTH AND SOUTH BASCULE SPANS.

(**) ON EAST FASCIA RAILINGS ON BOTH NORTH AND SOUTH BASCULE SPANS.

PROJECT NO. B-2532

CRAVEN COUNTY

STATION: 31+21.29 -L-

STATE OF NORTH CAROLINA
DEPARTMENT OF TRANSPORTATION
RALEIGH, NC

BASCULE SPAN "N"
CLASSIC CONCRETE
RAILING ELEVATIONS

NORTH CAROLINA PROFESSIONAL SEAL 12916 ENGINEER PAUL J. BARBER 12/7/06

HNTB NORTH CAROLINA, P.C.
343 E. Six Forks Rd., Suite 200, Raleigh, N.C. 27609

DRAWN BY SDY DATE 10/06
CHECKED BY GT DATE 10/06

DWG. NO. B186

REVISIONS						SHEET NO.
NO.	BY	DATE	NO.	BY	DATE	S-208
1			3			TOTAL SHEETS
2			4			348

sian AT NYODIII
01-DEC-2006 15:03
12 \cadd\45973 - Alfred Cunningham\DGN\100% Submission\B2532_SD_B186_texasrailelev.dgn

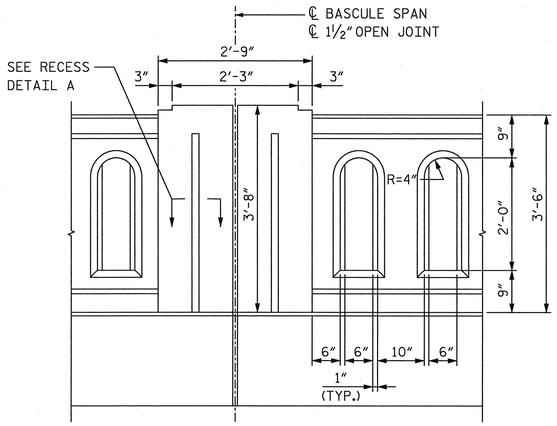

TYPICAL END PILASTER DETAIL

ROADWAY ELEVATION AT TOE

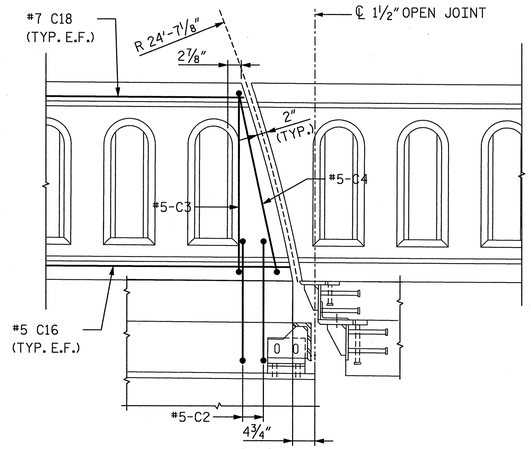

NORTH BASCULE LEAF WEST RAILING DETAIL

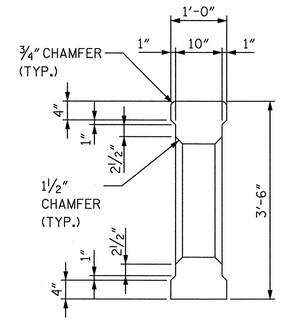

SECTION THRU WINDOW

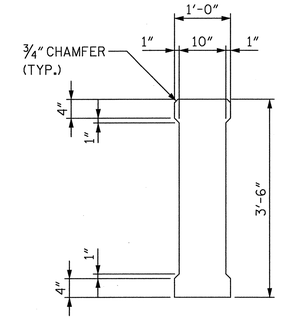

SECTION THRU POST

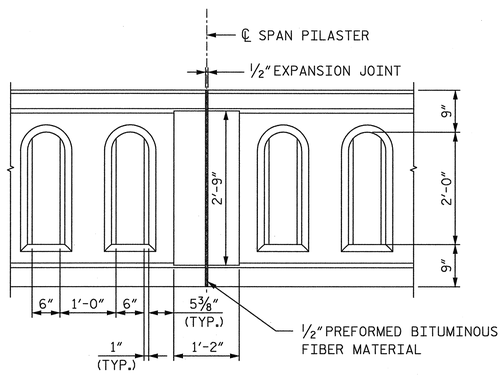

TYPICAL SPAN PILASTER DETAIL

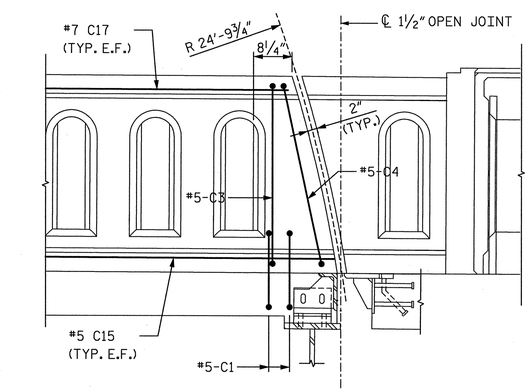

NORTH BASCULE LEAF EAST RAILING DETAIL

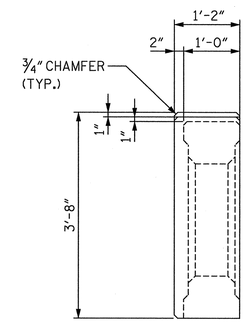

SECTION THRU PILASTER AT TOE

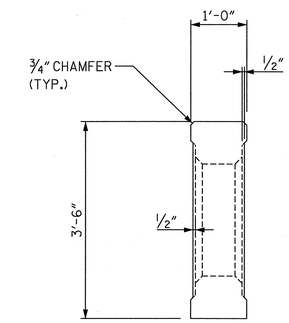

SECTION THRU INTERMEDIATE PILASTER

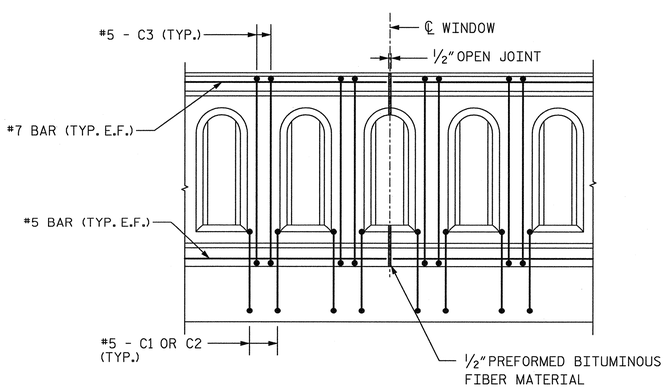

RAILING CONTROL JOINTS

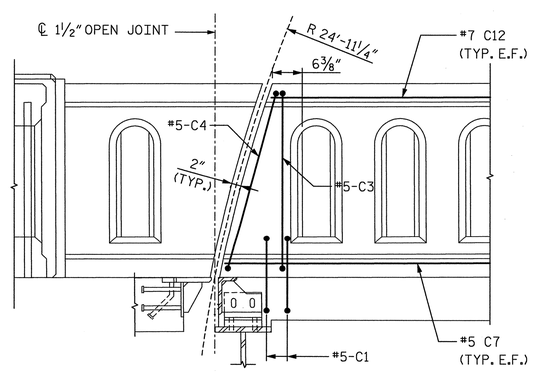

SOUTH BASCULE LEAF EAST RAILING DETAIL

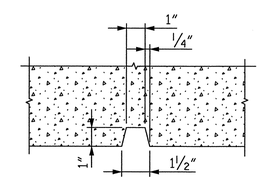

RECESS DETAIL A

NOTES:

1. FOR BASCULE SPAN RAILING ELEVATIONS, SEE DWG. B186.
2. FOR PARTIAL RAILING PLAN SECTIONS, SEE DWG. B189.
3. FOR BRIDGE CONCRETE RAILING BAR LIST AND QUANTITIES, SEE DWG. B196.

PROJECT NO. B-2532

CRAVEN COUNTY

STATION: 31+21.29 -L-

NORTH CAROLINA PROFESSIONAL SEAL 12916 ENGINEER PAUL J. BARBER 10/20/06

STATE OF NORTH CAROLINA
DEPARTMENT OF TRANSPORTATION
RALEIGH, NC

BASCULE SPAN "N"
CLASSIC CONCRETE
RAILING DETAILS

HNTB NORTH CAROLINA, P.C.
343 E. Six Forks Rd., Suite 200, Raleigh, N.C. 27609

DRAWN BY SDY DATE 10/06
CHECKED BY GT DATE 10/06

DWG. NO. B187

REVISIONS						
NO.	BY	DATE	NO.	BY	DATE	
1			3			
2			4			

SHEET NO. S-209

TOTAL SHEETS 348

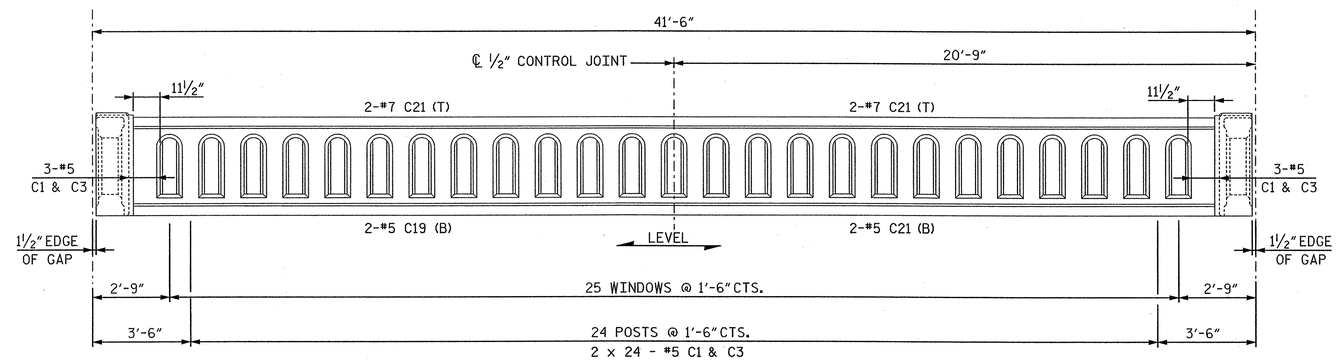

PIER 13 WEST ELEVATION

AT OBSERVATION AREA

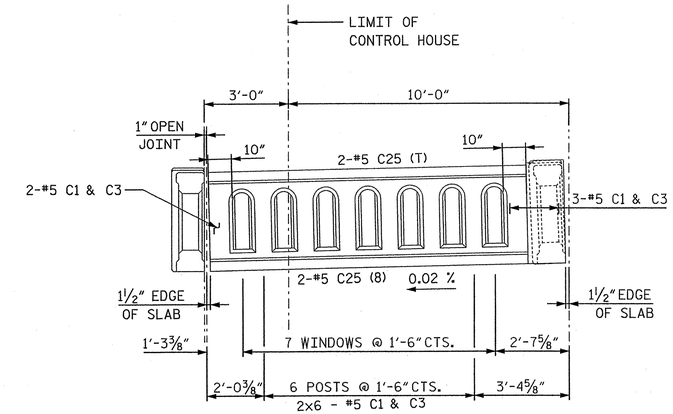

PIER 14 SOUTH ELEVATION

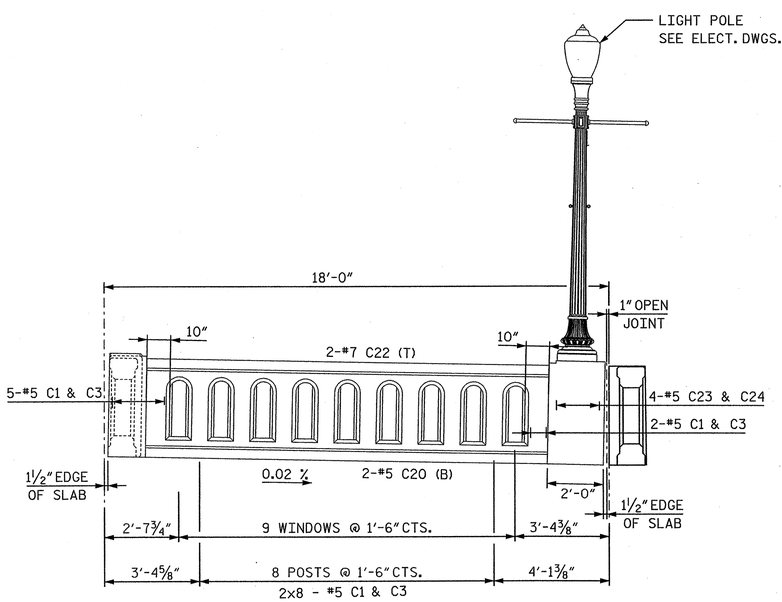

PIER 13 SOUTH ELEVATION

AT OBSERVATION AREA

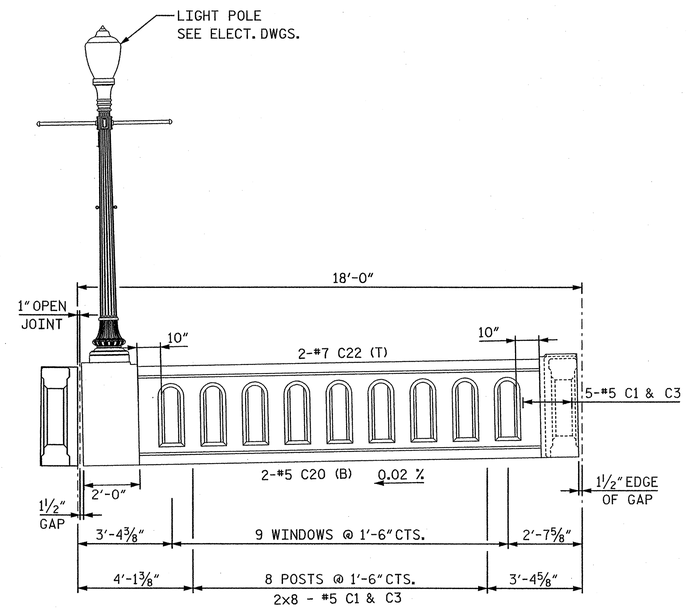

PIER 13 NORTH ELEVATION

AT OBSERVATION AREA

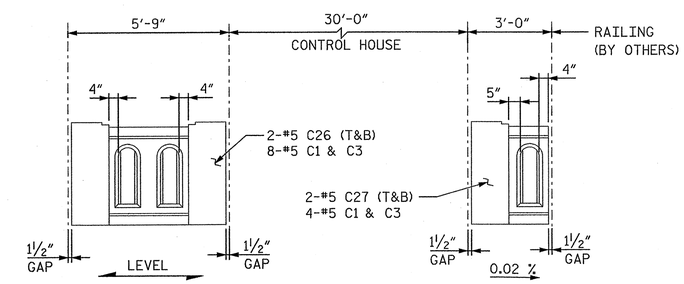

PIER 14 EAST ELEVATION

NOTES:

1. CLASSIC CONCRETE RAILING ON PIERS 13 AND 14 SHALL BE CLASS AA NORMAL WEIGHT CONCRETE WITH A MINIMUM COMPRESSIVE YIELD STRENGTH OF 4,500 PSI.
2. ALL REINFORCING STEEL IN THE CLASSIC CONCRETE RAILING SHALL BE EPOXY COATED.
3. CLASSIC CONCRETE RAILING SHALL NOT BE CAST UNTIL ALL PIER SLAB CONCRETE HAS REACHED A MINIMUM COMPRESSIVE STRENGTH OF 3,000 PSI.
4. FOR TYPICAL RAILING SECTIONS AND DETAILS, SEE DWG. B187.
5. FOR PARTIAL RAILING PLAN SECTIONS, SEE DWG. B189.
6. FOR LIGHT POLE ANCHORAGE DETAIL, SEE DWG. B190.
7. FOR CONCRETE RAILING BAR LIST. SEE PIER 13 AND 14 BAR LISTS ON DWGS. B194 AND B196, RESPECTIVELY.

PROJECT NO. B-2532

CRAVEN COUNTY

STATION: 31+21.29 -L-

NORTH CAROLINA PROFESSIONAL ENGINEER SEAL 12916 PAUL J. BARBER 12/7/06

STATE OF NORTH CAROLINA
DEPARTMENT OF TRANSPORTATION
RALEIGH, NC

BASCULE PIER
CLASSIC CONCRETE
RAILING ELEVATIONS

HNTB NORTH CAROLINA, P.C.
343 E. Six Forks Rd., Suite 200, Raleigh, N.C. 27609

DRAWN BY SDY DATE 10/06
CHECKED BY GT DATE 10/06

DWG. NO. B188

REVISIONS						SHEET NO.
NO.	BY	DATE	NO.	BY	DATE	S-210
1			3			TOTAL SHEETS
2			4			348

sign AT NYODIII
date 12/DEC/2006 15:05
J:\cadd\42673 - Alfred Cunningham\DGN\100% Submission\B2532_SD_B188_pierrailing.dgn

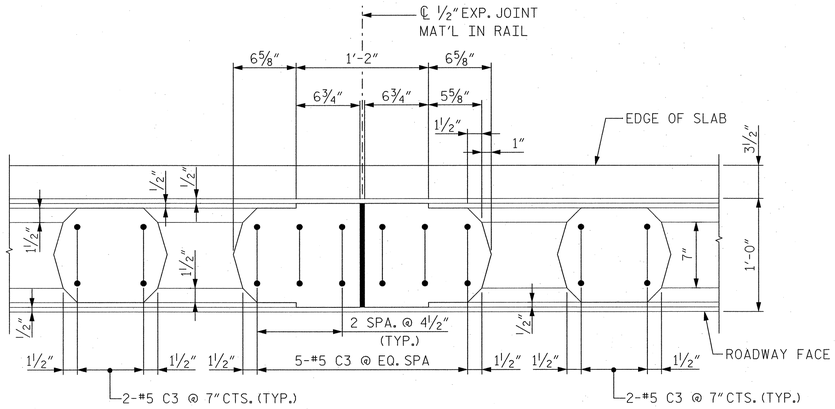

SECTION AT INTERMEDIATE PILASTER

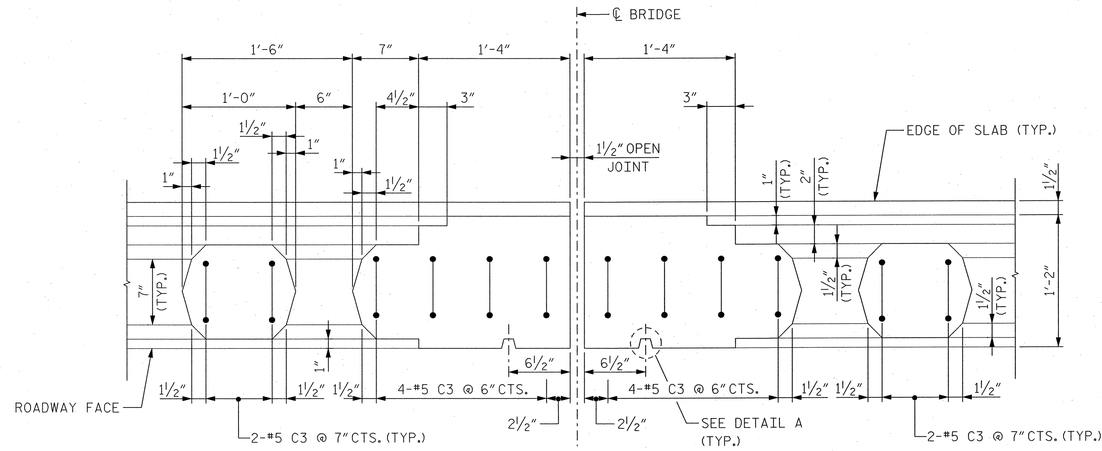

SECTION AT TOE

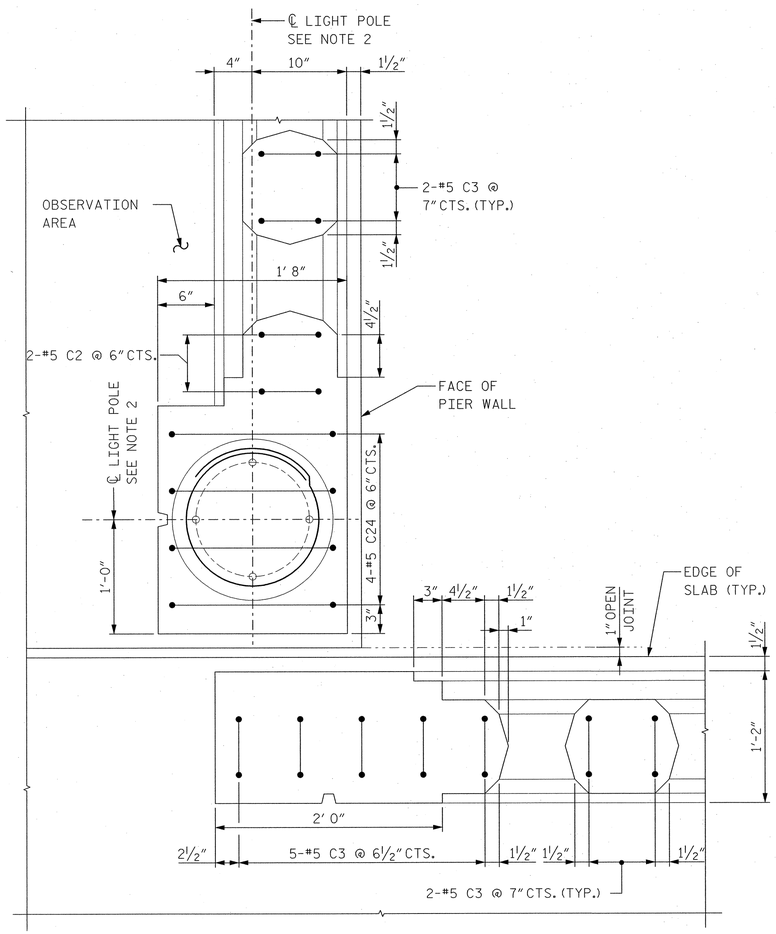

SECTION AT CORNER PILASTER

AT PIER 13 - LIGHT POLE

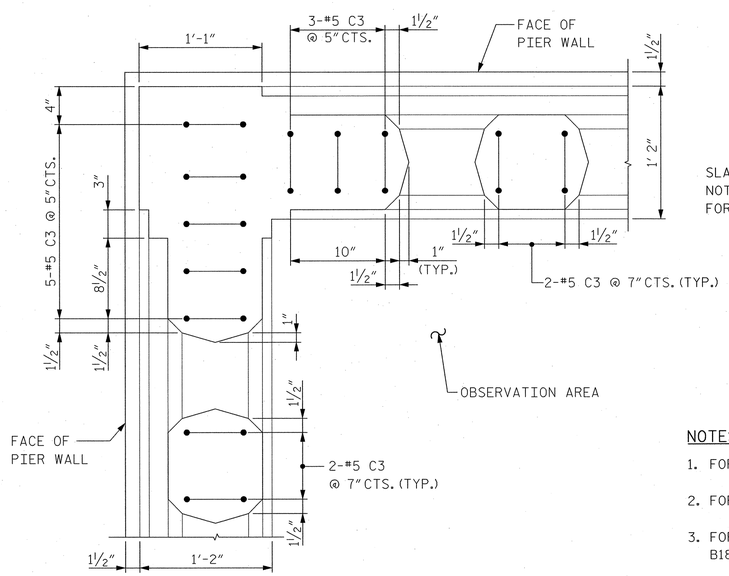

SECTION AT CORNER PILASTER

AT PIER 13 OBSERVATION AREA

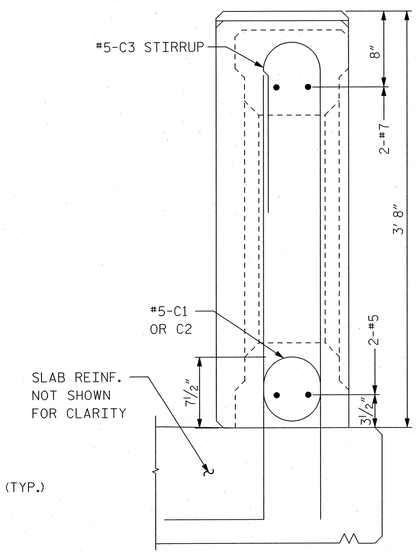

SECTION AT PILASTER

TYP. REINF. DETAIL

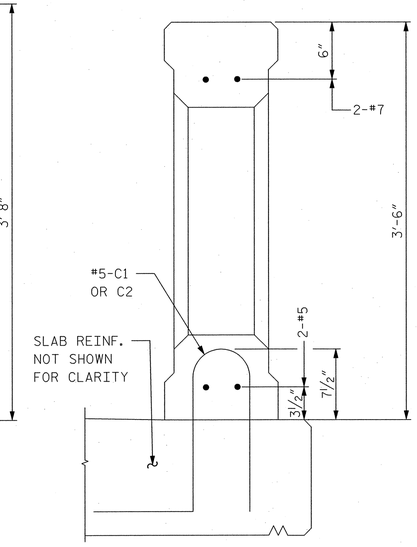

SECTION AT WINDOW

TYP. REINF. DETAIL

NOTES:

1. FOR RECESS DETAIL A, SEE DWG. B187.
2. FOR LIGHT POLE ANCHORAGE DETAILS, SEE DWG. B190.
3. FOR RAILING ELEVATIONS AND DETAILS, SEE DWGS. B186 TO B188.
4. FOR CONCRETE RAILING BAR LIST AND QUANTITIES, SEE DWG. B194, B196 AND B198.

NORTH CAROLINA PROFESSIONAL SEAL 12916 ENGINEER PAUL J. BARBER 1/03/06

PROJECT NO. B-2532

CRAVEN COUNTY

STATION: 31+21.29 -L-

STATE OF NORTH CAROLINA
DEPARTMENT OF TRANSPORTATION
RALEIGH, NC

BASCULE SPAN "N"
CLASSIC CONCRETE
BRIDGE RAILING DETAILS

HNTB NORTH CAROLINA, P.C.
343 E. Six Forks Rd., Suite 200, Raleigh, N.C. 27609

DRAWN BY SDY DATE 10/06
CHECKED BY GT DATE 10/06
DWG. NO. B189

REVISIONS						SHEET NO.
NO.	BY	DATE	NO.	BY	DATE	S-211
1			3			TOTAL SHEETS
2			4			348

fella — AT WY0072
User: Gary Thomas, PE
Updated: 10/03 1:54 PM
Acad v2003 3 ,Alfred Cunningham/OGIN 100% Submissions\B2532_SD_B189_Railing Details.dgn

BAR TYPES

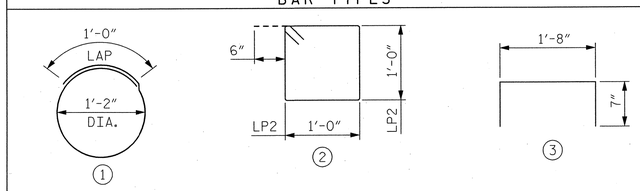

ALL BAR DIMENSIONS ARE OUT TO OUT

REINFORCING BAR SCHEDULE

MARK	NO.	SIZE	TYPE	LENGTH	WEIGHT
LP1	8	#4	1	4'-8"	26
LP2	7	#4	2	5'-0"	23
LP3	4	#5	3	2'-10"	12

BILL OF MATERIALS

LOCATION	REINFORCING STEEL, EPOXY COATED POLE ANCHORAGE (LBS)
PIER 13	13
PIER 14	48

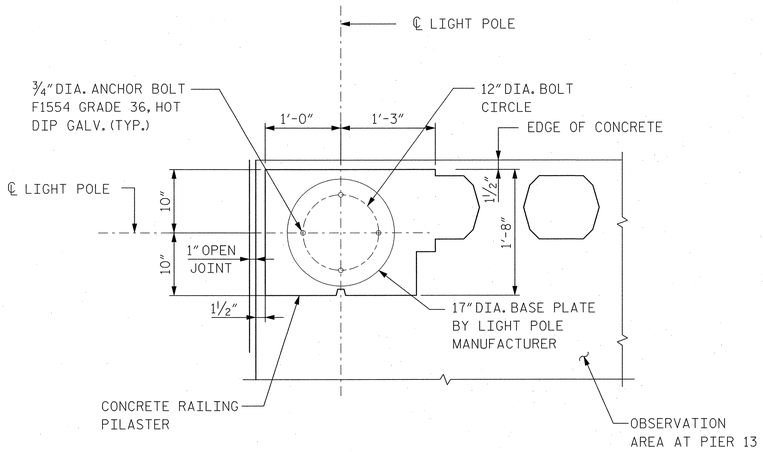

LIGHT POLE ANCHORAGE PLAN

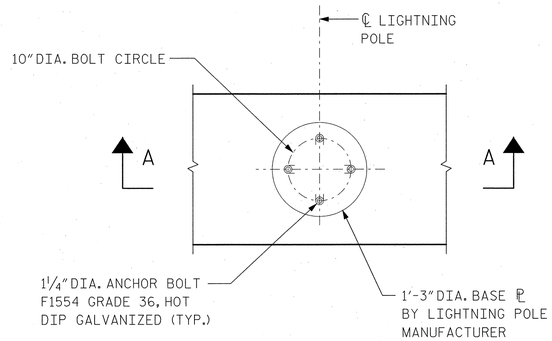

LIGHTNING/FLAG POLE ANCHORAGE PLAN

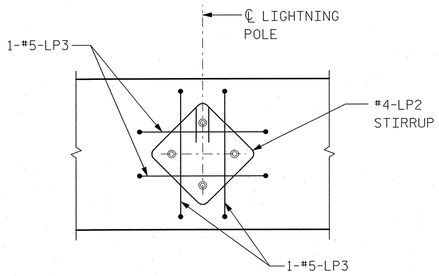

SECTION B-B

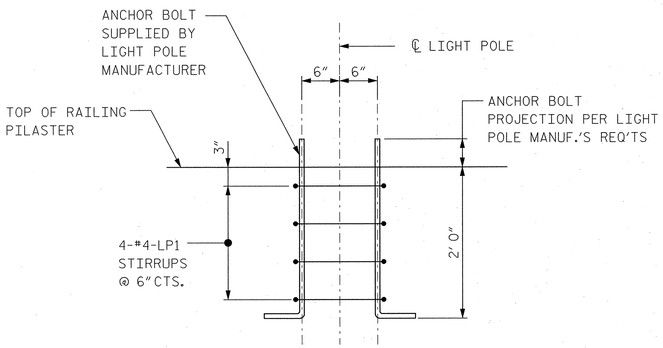

LIGHT POLE ANCHOR BOLT DETAIL

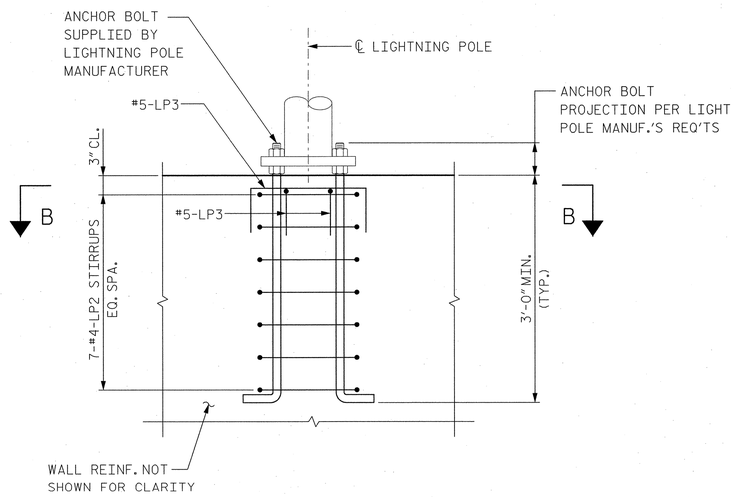

SECTION A-A

NOTES:

1. FOR PLAN LOCATION OF LIGHT AND LIGHTNING POLES, SEE PIER 13 AND PIER 14 ROADWAY LEVEL PLANS ON DWGS. B112 AND B126 RESPECTIVELY.
2. FOR LIGHT AND LIGHTNING POLE DETAILS, SEE ELECTRICAL DRAWINGS.

PROJECT NO. B-2532

CRAVEN **COUNTY**

STATION: 31+21.29 -L-

STATE OF NORTH CAROLINA
DEPARTMENT OF TRANSPORTATION
RALEIGH, NC

BASCULE PIER
UTILITY POLE
ANCHORAGE DETAILS

NORTH CAROLINA PROFESSIONAL SEAL 12916 ENGINEER PAUL J. BARBER 10/20/06

HNTB NORTH CAROLINA, P.C.
343 E. Six Forks Rd., Suite 200, Raleigh, N.C. 27609

DRAWN BY DS DATE 10/06
CHECKED BY GT DATE 10/06

DWG. NO. **B190**

REVISIONS						SHEET NO.
NO.	BY	DATE	NO.	BY	DATE	S-212
1			3			TOTAL SHEETS
2			4			348

Hello - AT WORK!2
J:\B2532_CRAVEN_TIP\B-2532
J:\cadd\426873 - Alfred Cunningham\DGN\1032_Submission\B2532_SD_B190_PoleAnchorage.dgn

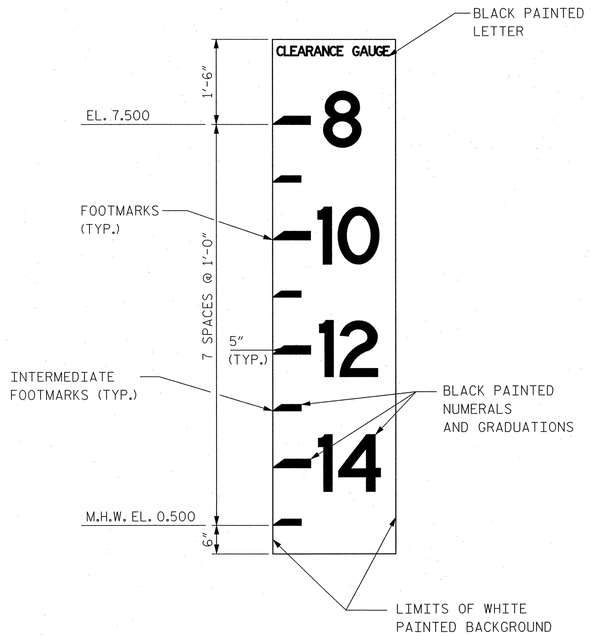

CLEARANCE GAUGE PANEL

(4 REQUIRED)

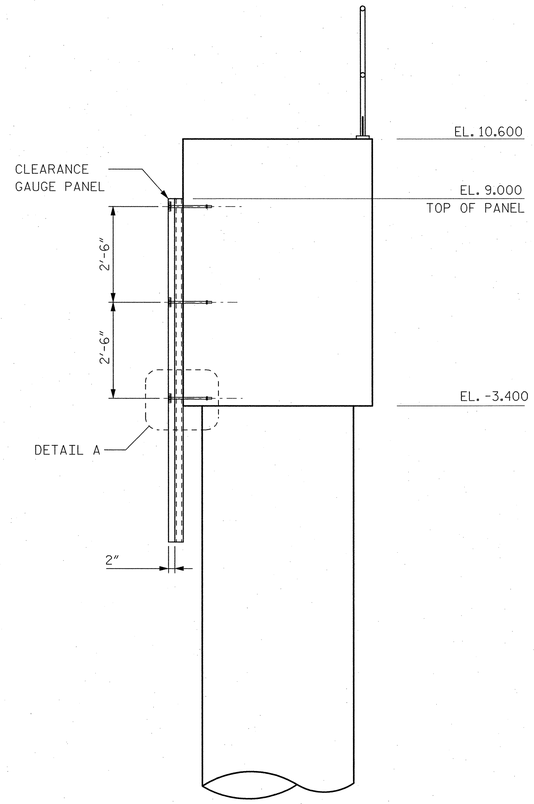

TYPICAL FENDER SECTION

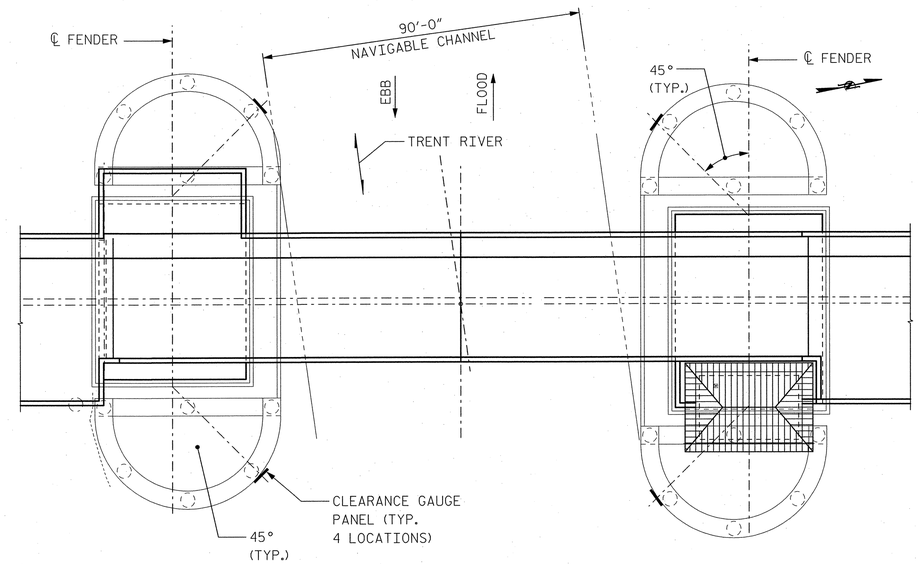

KEY PLAN

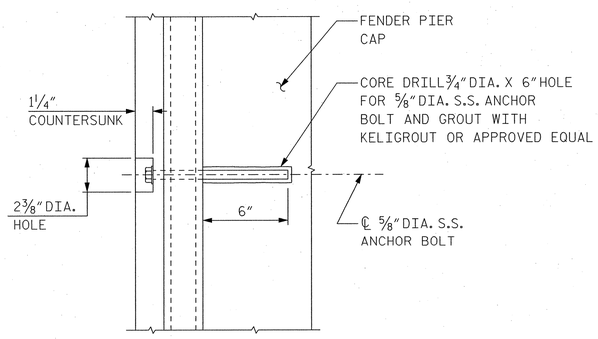

SUGGESTED BOLT DETAIL A

NOTES:

1. VERTICAL CLEARANCE GAUGES WILL BE REQUIRED AT THE NAVIGATIONAL CHANNEL BELOW THE BASCULE SPAN.
2. GAUGES WILL BE FURNISHED AND INSTALLED BY NCDOT DIVISION OF BRIDGE MAINTENANCE FORCES WITHIN 30 DAYS PRIOR TO COMPLETION OF THE BASCULE SPAN.
3. CONTRACTOR SHALL BE RESPONSIBLE FOR NOTIFYING, COORDINATING, AND ARRANGING ACCESS FOR DOT BRIDGE MAINTENANCE PERSONNEL TO COMPLETE THIS WORK.
4. NO SEPARATE PAYMENT WILL BE MADE FOR THE ABOVE WORK. PAYMENT SHALL BE CONSIDERED INCIDENTAL TO CONSTRUCTION OF THE PROJECT.
5. NUMERALS SHOWN ON THE NAVIGATIONAL VERTICAL CLEARANCE GAUGE SHALL INDICATE DISTANCE IN FEET BELOW NAVIGATION SPAN LOW STEEL ELEVATION.
6. HYDROLOGIC DATA

   MEAN LOW WATER = -0.50 FT

   MEAN HIGH WATER = 0.50 FT

   MEAN TIDE LEVEL = 0.00 FT

   100 YEAR FLOOD = 8.00 FT
7. FOR FENDER SYSTEM DETAILS, SEE DWGS. B150 TO B152.

PROJECT NO. B-2532

CRAVEN **COUNTY**

STATION: 31+21.29 -L-

NORTH CAROLINA PROFESSIONAL SEAL 12916 ENGINEER PAUL J. BARBER 10/13/06

STATE OF NORTH CAROLINA
DEPARTMENT OF TRANSPORTATION
RALEIGH, NC

BASCULE SPAN "N"
NAVIGATIONAL
CLEARANCE GAUGE

HNTB NORTH CAROLINA, P.C.
343 E. Six Forks Rd., Suite 200, Raleigh, N.C. 27609

DRAWN BY SPL DATE 10/06
CHECKED BY GT DATE 10/06

DWG. NO. **B191**

REVISIONS						SHEET NO.
NO.	BY	DATE	NO.	BY	DATE	S-213
1			3			TOTAL SHEETS
2			4			348

slam AT NYOD111
02-OCT-2006 17:03
J:\cadd\42073 - Alfred Cunningham\DGN\100% Submission\B2532_SD_B191_Navrgauge.dgn

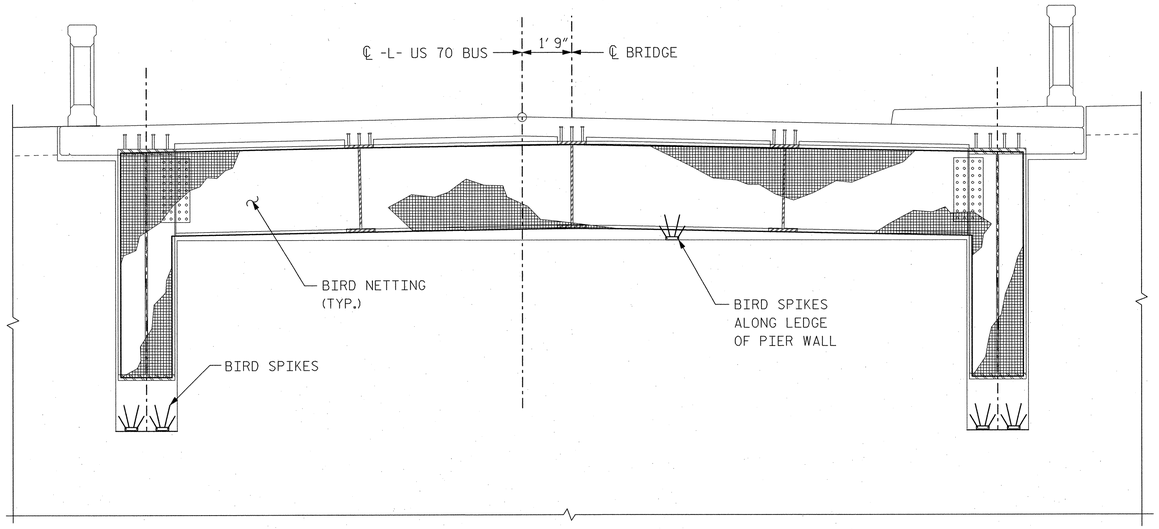

PIER 13 - PARTIAL NORTH ELEVATION

(PIER 14 - SOUTH ELEVATION SIMILAR)

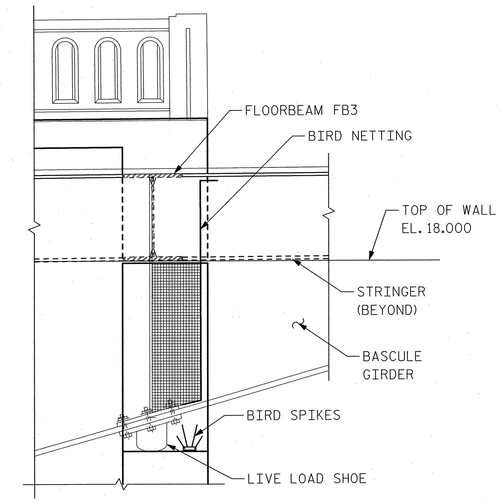

SECTION A-A

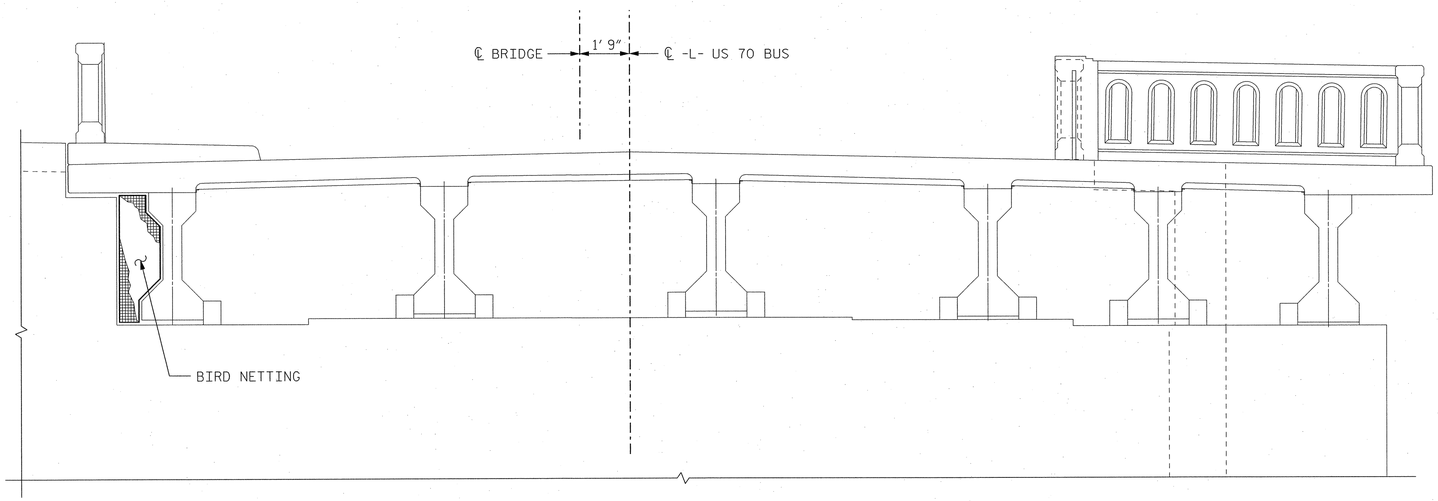

PIER 13 - PARTIAL SOUTH ELEVATION

(PIER 14 - NORTH ELEVATION SIMILAR)

NOTES:

1. BIRD REPELLANT NETTING SHALL HAVE OPENINGS NO LARGER THAN ¾" X ¾", SUCH AS K-NET BIRD NETTING MANUFACTURED BY NIXALITE OF AMERICA INC.; BIRD-B-GONE INC; FLY-BYE OR AN APPROVED EQUAL.
2. BIRD REPELLANT NETTING SHALL BE ATTACHED TO THE STRUCTURE USING TENSIONED STEEL WIRES (TIE LINES) IN ACCORDANCE WITH THE MANUFACTURER'S RECOMMENDATIONS.
3. BIRD SPIKES SHALL BE STAINLESS STEEL, SUCH AS E-SPIKE MODEL 6405 MANUFACTURED BY NIXALITE OF AMERICA INC.; BIRD-B-GONE INC.; BIRD-X INC. OR AN APPROVED EQUAL.
4. COLOR OF THE SPIKES TO BE DETERMINED.
5. ALL HARDWARE FOR STITCHING AND CONNECTION TO STRUCTURE SHALL BE STAINLESS STEEL AND AS RECOMMENDED BY THE MANUFACTURER.
6. SOUTH BASCULE PIER 13 SHOWN, NORTH BASCULE PIER 14 SIMILAR.
7. BIRD NETTING AND SPIKES, INCLUDING ALL WORK AND HARDWARE ASSOCIATED WITH FURNISHING AND INSTALLING THESE ITEMS, SHALL BE PAID FOR IN THE LUMP SUM ITEM FOR "BIRD PROTECTION".

PROJECT NO. B-2532

CRAVEN **COUNTY**

STATION: 31+21.29 -L-

NORTH CAROLINA PROFESSIONAL SEAL 12916 ENGINEER PAUL J. BARBER 10/5/06

STATE OF NORTH CAROLINA
DEPARTMENT OF TRANSPORTATION
RALEIGH, NC

BASCULE PIER
BIRD NETTING

HNTB NORTH CAROLINA, P.C.
343 E. Six Forks Rd., Suite 200, Raleigh, N.C. 27609

DRAWN BY SPL DATE 10/06
CHECKED BY GT DATE 10/06

DWG. NO. **B192**

REVISIONS						SHEET NO.
NO.	BY	DATE	NO.	BY	DATE	S-214
1			3			TOTAL SHEETS
2			4			248

Tella AT W10072
02-OCT-2006 15:04
J:\B2532\B2532_SD_B192_Birdnet.dgn
J:\B2532\B2532_Submission\DGN 100%, Submission, Alfred Cunningham

REINFORCING BAR SCHEDULE

BASCULE PIER 13

MARK	NO.	SIZE	TYPE	LENGTH	WEIGHT (LBS.)
BASCULE PIER 13 - EAST WALL (REF. DWG. B116)					
13P1	39	8	1	11'-6"	1,197
13P2	39	8	1	8'-6"	885
13P3	38	8	STR	26'-8"	2,706
13P4	37	8	STR	29'-6"	2,914
13P5	2	8	STR	23'-0"	123
13P6	1	8	STR	20'-0"	53
13P7	54	5	1	8'-6"	479
13P8	54	5	1	5'-1"	286
13P9	60	5	STR	35'-9"	2,237
13P10	5	5	2	5'-6"	29
BASCULE PIER 13 - WEST VERTICAL WALL (REF. DWG. B119)					
13P1	17	8	1	11'-6"	522
13P2	18	8	1	8'-6"	409
13P8	60	5	1	5'-1"	318
13P9	30	5	STR	35'-9"	1,119
13P11	41	8	1	16'-8"	1,825
13P12	18	8	STR	14'-3"	685
13P13	17	8	STR	11'-3"	511
13P14	70	8	STR	12'-0"	2,243
13P15	70	8	STR	9'-3"	1,729
13P16	35	5	1	7'-9"	283
13P17	70	5	1	3'-7"	262
13P18	35	8	STR	6'-0"	561
13P20	6	5	STR	10'-0"	63
13P57	8	5	STR	3'-0"	25
BASCULE PIER 13 - SOUTH WALL (REF. DWGS. B115, B118)					
13P1	46	8	1	11'-6"	1,412
13P2	45	8	1	8'-6"	1,021
13P5	45	8	STR	23'-0"	2,763
13P6	45	8	STR	20'-0"	2,403
13P7	24	5	1	8'-6"	213
13P8	43	5	1	5'-1"	228
13P19	48	5	STR	42'-9"	2,140
13P20	26	5	STR	10'-0"	271
13P21	6	7	4	14'-6"	178
13P22	6	9	1	14'-10"	303
13P23	22	6	1	10'-3"	339
13P24	15	5	2	10'-3"	160
13P25	11	5	2	20'-3"	232
13P26	2	5	STR	14'-0"	29
13P27	18	5	STR	8'-9"	164
13P28	36	6	1	6'-6"	351
13P29	10	6	STR	8'-0"	120
13P33	5	7	2	16'-9"	171
13P34	10	7	1	10'-8"	218
13P35	12	4	5	7'-9"	62
13P36	14	5	1	10'-6"	153
13P37	11	5	1	6'-6"	75
13P38	11	5	1	4'-1"	47
13P39	22	5	STR	16'-2"	371
13P40	6	5	2	9'-3"	58
13P75	9	5	1	10'-0"	94
BASCULE PIER 13 - WEST INCLINED/VERT. WALL (REF. DWGS. B116, B118)					
13P20	8	5	STR	10'-0"	83
13P28	72	6	1	6'-6"	703
13P29	20	6	STR	8'-0"	240
13P30	40	7	STR	16'-0"	1,308
13P31	20	7	4	8'-4"	341
13P32	52	4	5	6'-7"	229
13P38	22	5	1	4'-1"	94
13P41	20	6	STR	37'-4"	1,121
13P42	68	6	2	11'-0"	1,123
13P43	8	5	STR	11'-0"	92
13P44	36	5	STR	6'-9"	253
13P45	27	6	4	8'-4"	338
13P46	27	5	STR	4'-6"	127
13P47	10	5	2	7'-2"	75
13P48	8	7	1	25'-5"	416
13P49	8	7	1	21'-8"	354
13P50	65	4	2	8'-3"	358
13P51	60	5	STR	10'-3"	641
13P52	7	5	STR	37'-4"	273
13P53	3	6	STR	37'-4"	168
13P54	19	4	2	5'-3"	67
13P55	12	5	STR	8'-6"	106
13P56	12	5	STR	18'-6"	232
13P57	8	5	STR	3'-0"	25
BASCULE PIER 13 - NORTH WALL (REF. DWGS. B114, B118)					
13P1	38	8	1	11'-6"	1,167
13P2	31	8	1	8'-6"	704
13P3	3	8	STR	26'-8"	214
13P4	1	8	STR	29'-6"	79
13P5	4	8	STR	23'-0"	246
13P6	5	8	STR	20'-0"	267
13P7	30	5	1	8'-6"	266
13P8	49	5	1	5'-1"	260
13P19	26	5	STR	42'-9"	1,159
13P20	34	5	STR	10'-0"	355
13P26	2	5	STR	14'-0"	29
13P27	18	5	STR	8'-9"	164
13P28	52	6	1	6'-6"	508
13P29	10	6	STR	8'-0"	120
13P33	5	7	2	16'-9"	171
13P34	10	7	1	10'-8"	218
13P35	12	4	5	7'-9"	62
13P36	14	5	1	10'-6"	153
13P37	11	5	1	6'-6"	75
13P38	11	5	1	4'-1"	47
13P39	22	5	STR	16'-2"	371
13P43	2	5	STR	10'-0"	21
13P57	16	5	STR	3'-0"	50
13P58	8	8	STR	16'-3"	347
13P59	4	8	STR	19'-3"	206
13P60	8	8	STR	16'-6"	352
13P61	8	8	STR	13'-6"	288
13P62	22	8	STR	13'-0"	764
13P63	3	8	STR	12'-7"	101
13P64	3	8	STR	15'-7"	125
13P65	44	9	1	15'-3"	2,281
13P66	44	9	1	10'-6"	1,571
13P67	44	9	STR	25'-10"	3,865
13P68	44	9	STR	21'-1"	3,154
13P69	416	5	5	9'-5"	4,086
13P70	502	5	6	3'-5"	1,789
13P71	16	8	1	18'-9"	801
13P72	16	8	1	15'-0"	641
13P73	43	5	5	10'-11"	490
13P74	9	5	1	10'-0"	94
13P75	34	6	STR	12'-3"	626
13P76	24	5	1	12'-4"	309
13P77	3	5	STR	24'-6"	77
13P78	14	5	STR	10'-6"	153
13P79	30	6	STR	12'-3"	552
13P80	6	5	1	9'-6"	59
13P81	6	4	1	5'-3"	21
13P101	6	6	STR	8'-0"	72
BASCULE PIER 13 - SOUTH WALL (REF. DWG. B120)					
13P81	64	4	2	5'-3"	224
13P82	8	4	STR	7'-7"	41
13P83	8	4	STR	9'-5"	50
13P84	8	4	STR	5'-10"	31
BASCULE PIER 13 - HVAC WALL RECESS (REF. DWG. B111)					
13P85	4	5	STR	3'-8"	15
13P86	5	5	1	4'-4"	23
13P87	7	5	STR	6'-8"	49
13P88	7	5	4	3'-2"	23
13P89	11	5	2	5'-6"	63
13P90	5	6	STR	12'-8"	95
BASCULE PIER 13 - MACHINERY WALL EL. 5.50 (REF. DWG. B109)					
13P2	40	8	1	8'-6"	908
13P8	13	5	1	5'-1"	69
13P91	40	6	STR	13'-0"	781
13P92	13	5	1	8'-4"	113
13P93	26	5	STR	13'-3"	359
13P94	26	5	1	5'-0"	136
13P95	26	5	STR	5'-6"	149
13P96	26	5	1	6'-1"	165

BAR TYPES

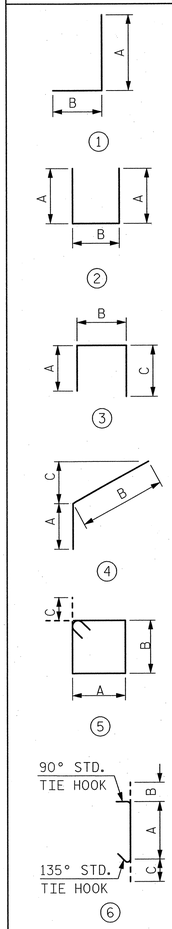

ALL BAR DIMENSIONS ARE OUT TO OUT

TYPE 1

MARK	SIZE	A	B
13P1	8	9'-6"	2'-0"
13P2	8	6'-6"	2'-0"
13P7	5	4'-3"	4'-3"
13P8	5	4'-3"	10"
13P11	8	14'-8"	2'-0"
13P16	5	6'-3"	1'-6"
13P17	5	2'-9"	10"
13P22	9	11'-4"	3'-6"
13P23	6	9'-3"	1'-0"
13P28	6	5'-6"	1'-0"
13P34	7	9'-2"	1'-6"
13P36	5	9'-6"	1'-0"
13P37	5	3'-3"	3'-3"
13P38	5	3'-3"	10"
13P48	7	24'-3"	1'-2"
13P49	7	20'-6"	1'-2"
13P65	9	13'-0"	2'-3"
13P66	9	8'-3"	2'-3"
13P71	8	17'-5"	1'-4"
13P72	8	13'-8"	1'-4"
13P74	5	5'-0"	5'-0"
13P76	5	11'-6"	10"
13P86	5	2'-8"	1'-6"
13P92	5	7'-6"	10"
13P94	5	2'-6"	2'-6"
13P96	5	5'-3"	10"
13P97	6	2'-6"	2'-6"
13P98	6	8'-6"	2'-6"
13P99	6	4'-0"	2'-6"
13P113	6	4'-3"	1'-6"

TYPE 2

MARK	SIZE	A	B
13P10	5	2'-0"	1'-6"
13P24	5	4'-0"	2'-3"
13P25	5	9'-0"	2'-3"
13P33	7	1'-2"	14'-5"
13P40	5	3'-6"	2'-3"
13P47	5	3'-0"	1'-2"
13P80	5	3'-6"	2'-6"
13P81	4	1'-6"	2'-3"
13P89	5	2'-0"	1'-7"
13P105	6	8'-3"	2'-11"
13P106	6	7'-0"	2'-11"
13P107	6	5'-6"	2'-11"
13P108	6	4'-0"	2'-11"
13P109	5	6'-3"	3'-0"
13P120	4	1'-0"	8"

TYPE 3

MARK	SIZE	A	B	C
13P116	6	8"	2'-4"	1'-6"
13P131	5	8"	4'-3"	1'-6"

TYPE 4

MARK	SIZE	A	B	C
13P21	6	3'-6"	11'-0"	7'-9"
13P31	7	4'-10"	3'-6"	3'-3"
13P45	6	4'-10"	3'-6"	3'-3"
13P88	5	8"	2'-6"	1'-9"
13P103	8	3'-6"	3'-6"	3'-3"
13P104	8	4'-9"	8'-9"	2'-10"

TYPE 5

MARK	SIZE	A	B	C
13P32	4	1'-9"	1'-2"	4½"
13P35	4	1'-9"	1'-9"	4½"
13P50	4	2'-0"	1'-9"	4½"
13P54	4	1'-0"	1'-3"	4½"
13P69	5	1'-7"	2'-8"	5½"
13P73	5	2'-6"	2'-6"	5½"

TYPE 6

MARK	SIZE	A	B	C
13P70	5	2'-6"	5½"	5½"
CT1	5	2'-6"	5½"	5½"
CT2	5	2'-3"	5½"	5½"
CT3	5	1'-9"	5½"	5½"
CT4	5	4'-9"	5½"	5½"

SUBSTRUCTURE BILL OF MATERIAL

	CLASS AA CONCRETE	EPOXY COATED REINFORCING STEEL
	(CU.YDS.)	(LBS.)
PIER 13	706	101,490

BAR LEGEND:

BAR LOCATION
13 INDICATES PIER 13
14 INDICATES PIER 14
BAR NUMBER

13 P 1

ELEMENT IDENTIFICATION
DP INDICATES DRILLED PIER
PF INDICATES PIER FOOTING
P INDICATES PIER
C INDICATES CONCRETE RAILING
LP INDICATES LIGHT POLE

NORTH CAROLINA PROFESSIONAL ENGINEER SEAL 12916 PAUL J. BARBER 10/13/06

PROJECT NO. B-2532
CRAVEN **COUNTY**
STATION: 31+21.29 -L-

STATE OF NORTH CAROLINA
DEPARTMENT OF TRANSPORTATION
RALEIGH, NC

BASCULE PIER 13
BAR LIST AND QUANTITIES

HNTB NORTH CAROLINA, P.C.
343 E. Six Forks Rd., Suite 200, Raleigh, N.C. 27609

DRAWN BY SPL DATE 10/06
CHECKED BY GT DATE 10/06
DWG. NO. **B193**

REVISIONS						SHEET NO.
NO.	BY	DATE	NO.	BY	DATE	S-215
1			3			TOTAL SHEETS
2			4			348

jella AT W10072
02-OCT-2006 18:55
dgn/pw48253 Alfred Dunnigham/OGN 100% Submission/B2532_SD_B193_P13bar1st.dgn

REINFORCING BAR SCHEDULE

BASCULE PIER 13

MARK	NO.	SIZE	TYPE	LENGTH	WEIGHT (LBS.)	MARK	NO.	SIZE	TYPE	LENGTH	WEIGHT (LBS.)
BASCULE PIER 13 -MACHINERY SLAB EL. 5.50 (REF. DWG. B111)											
13P97	28	6	1	5′-0″	210						
13P98	42	6	1	11′-0″	694						
13P99	14	6	1	6′-6″	137						
13P100	14	6	STR	13′-3″	279						
13P101	14	6	STR	8′-0″	168						
13P102	16	6	STR	19′-0″	457						
BASCULE PIER 13 - COUNTERWEIGHT BUMPER (REF. DWG. B121)											
13P2	32	8	1	8′-6″	726						
13P103	14	8	4	7′-0″	262						
13P104	14	8	4	13′-6″	505						
13P105	8	6	2	19′-5″	233						
13P106	2	6	2	16′-11″	51						
13P107	2	6	2	13′-11″	42						
13P108	2	6	2	10′-11″	33						
13P109	16	5	2	15′-6″	259						
BASCULE PIER 13 - ELECTRICAL ROOM SLAB (REF. DWGS. B111, B188)											
13P33	10	7	2	16′-9″	342						
13P34	20	7	1	10′-8″	436						
13P35	24	4	5	7′-9″	124						
13P57	8	5	STR	3′-0″	25						
13P110	2	7	STR	12′-4″	50						
13P111	1	7	STR	38′-0″	78						
13P112	1	7	STR	16′-0″	33						
13P113	146	6	1	5′-9″	1,261						
13P114	114	6	STR	12′-1″	2,069						
13P115	6	6	STR	8′-1″	73						
13P116	6	6	3	4′-6″	41						
13P117	18	4	STR	38′-0″	457						
13P118	6	4	STR	27′-8″	111						
13P119	6	4	STR	7′-2″	29						
13P120	6	4	2	2′-8″	11						
13P121	8	5	STR	7′-0″	58						
BASCULE PIER 13 - OBSERVATION AREA SLAB (REF. DWG. B113)											
13P7	2	5	1	8′-6″	18						
13P57	16	5	STR	3′-0″	50						
13P111	1	7	STR	38′-0″	78						
13P112	2	7	STR	16′-0″	65						
13P113	109	6	2	5′-9″	941						
13P122	132	6	STR	16′-0″	3,172						
13P123	18	6	STR	6′-8″	180						
13P124	18	6	STR	4′-9″	128						
13P125	24	4	STR	38′-0″	609						
13P126	10	4	STR	26′-0″	174						
13P127	10	4	STR	7′-6″	50						
13P128	16	6	STR	11′-0″	264						
BASCULE PIER 13 - EAST WALL SLAB (REF. DWG. B113)											
13P7	1	5	1	8′-6″	9						
13P129	39	5	STR	4′-3″	173						
13P130	7	4	STR	38′-3″	179						
13P131	39	5	3	6′-5″	261						
13P132	1	7	STR	35′-9″	73						
BASCULE PIER 13 - CROSS TIES (REF. DWG. B109 AND B118)											
CT1	298	5	6	3′-5″	1,062						
CT2	546	5	6	3′-2″	1,803						

BAR TYPES

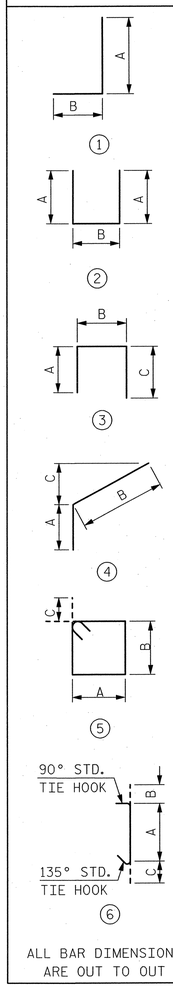

ALL BAR DIMENSIONS ARE OUT TO OUT

TYPE 1

MARK	SIZE	A	B
13P1	8	9′-6″	2′-0″
13P2	8	6′-6″	2′-0″
13P7	5	4′-3″	4′-3″
13P8	5	4′-3″	10″
13P11	8	14′-8″	2′-0″
13P16	5	6′-3″	1′-6″
13P17	5	2′-9″	10″
13P22	9	11′-4″	3′-6″
13P23	6	9′-3″	1′-0″
13P28	6	5′-6″	1′-0″
13P34	7	9′-2″	1′-6″
13P36	5	9′-6″	1′-0″
13P37	5	3′-3″	3′-3″
13P38	5	3′-3″	10″
13P48	7	24′-3″	1′-2″
13P49	7	20′-6″	1′-2″
13P65	9	13′-0″	2′-3″
13P66	9	8′-3″	2′-3″
13P71	8	17′-5″	1′-4″
13P72	8	13′-8″	1′-4″
13P74	5	5′-0″	5′-0″
13P76	5	11′-6″	10″
13P86	5	2′-8″	1′-6″
13P92	5	7′-6″	10″
13P94	5	2′-6″	2′-6″
13P96	5	5′-3″	10″
13P97	6	2′-6″	2′-6″
13P98	6	8′-6″	2′-6″
13P99	6	4′-0″	2′-6″
13P113	6	4′-3″	1′-6″

TYPE 2

MARK	SIZE	A	B
13P10	5	2′-0″	1′-6″
13P24	5	4′-0″	2′-3″
13P25	5	9′-0″	2′-3″
13P33	7	1′-2″	14′-5″
13P40	5	3′-6″	2′-3″
13P47	5	3′-0″	1′-2″
13P80	5	3′-6″	2′-6″
13P81	4	1′-6″	2′-3″
13P89	5	2′-0″	1′-7″
13P105	6	8′-3″	2′-11″
13P106	6	7′-0″	2′-11″
13P107	6	5′-6″	2′-11″
13P108	6	4′-0″	2′-11″
13P109	5	6′-3″	3′-0″
13P120	4	1′-0″	8″

TYPE 3

MARK	SIZE	A	B	C
13P116	6	8″	2′-4″	1′-6″
13P131	5	8″	4′-3″	1′-6″

TYPE 4

MARK	SIZE	A	B	C
13P21	6	3′-6″	11′-0″	7′-9″
13P31	7	4′-10″	3′-6″	3′-3″
13P45	6	4′-10″	3′-6″	3′-3″
13P88	5	8″	2′-6″	1′-9″
13P103	8	3′-6″	3′-6″	3′-3″
13P104	8	4′-9″	8′-9″	2′-10″

TYPE 5

MARK	SIZE	A	B	C
13P32	4	1′-9″	1′-2″	4½″
13P35	4	1′-9″	1′-9″	4½″
13P50	4	2′-0″	1′-9″	4½″
13P54	4	1′-0″	1′-3″	4½″
13P69	5	1′-7″	2′-8″	5½″
13P73	5	2′-6″	2′-6″	5½″

TYPE 6

MARK	SIZE	A	B	C
13P70	5	2′-6″	5½″	5½″
CT1	5	2′-6″	5½″	5½″
CT2	5	2′-3″	5½″	5½″
CT3	5	1′-9″	5½″	5½″
CT4	5	4′-9″	5½″	5½″

NOTES:

1. FOR BASCULE PIER 13
   BILL OF MATERIALS, SEE DWG. B193

BAR LEGEND:

13 P 1

- BAR LOCATION
  - 13 INDICATES PIER 13
  - 14 INDICATES PIER 14
- BAR NUMBER
- ELEMENT IDENTIFICATION
  - DP INDICATES DRILLED PIER
  - PF INDICATES PIER FOOTING
  - P INDICATES PIER
  - C INDICATES CONCRETE RAILING
  - LP INDICATES LIGHT POLE

NORTH CAROLINA PROFESSIONAL SEAL 12916 ENGINEER PAUL J. BARBER 10/3/06

PROJECT NO. B-2532

CRAVEN COUNTY

STATION: 31+21.29 -L-

STATE OF NORTH CAROLINA
DEPARTMENT OF TRANSPORTATION
RALEIGH, NC

BASCULE PIER 13
BAR LIST AND QUANTITIES

HNTB NORTH CAROLINA, P.C.
343 E. Six Forks Rd., Suite 200, Raleigh, N.C. 27609

DRAWN BY SPL DATE 10/06
CHECKED BY GT DATE 10/06

DWG. NO. B194

REVISIONS						SHEET NO.
NO.	BY	DATE	NO.	BY	DATE	S-216
1			3			TOTAL SHEETS
2			4			348

jello AT W10002
0206-07-ROA-01.dgn
JJcad/4/2873 - Alfred Cunningham\DGN 1002: Submission\B2532_SD_B194_P13barlist.dgn

REINFORCING BAR SCHEDULE

BASCULE PIER 14

MARK	NO.	SIZE	TYPE	LENGTH	WEIGHT (LBS.)
BASCULE PIER 14 - WEST WALL (REF. DWG. B130)					
14P1	38	8	1	11'-6"	1,167
14P2	38	8	1	8'-6"	862
14P3	38	8	STR	27'-1"	2,748
14P4	38	8	STR	30'-1"	3,052
14P7	60	5	1	8'-6"	532
14P8	60	5	1	5'-1"	318
14P9	60	5	STR	35'-9"	2,237
BASCULE PIER 14 - EAST VERTICAL WALL (REF. DWG. B130)					
14P1	44	8	1	11'-6"	1,351
14P2	34	8	1	8'-6"	772
14P3	10	8	STR	27'-1"	868
14P4	3	8	STR	30'-1"	241
14P7	55	5	1	8'-6"	488
14P8	87	5	1	5'-1"	461
14P10	26	8	STR	15'-7"	1,082
14P11	28	8	STR	18'-7"	1,389
14P12	8	8	STR	11'-0"	235
14P13	30	5	STR	10'-3"	321
14P14	60	5	STR	3'-0"	188
14P15	22	5	1	4'-8"	107
14P16	38	5	STR	36'-9"	1,457
14P17	62	5	1	3'-7"	232
14P18	3	8	STR	29'-5"	236
BASCULE PIER 14 - NORTH WALL (REF. DWGS. B129)					
14P1	52	8	1	11'-6"	1,597
14P2	52	8	1	8'-6"	1,180
14P5	52	8	STR	23'-0"	3,193
14P6	52	8	STR	20'-0"	2,777
14P7	55	5	1	8'-6"	488
14P8	60	5	1	5'-1"	318
14P19	48	5	STR	49'-10"	2,495
14P36	13	5	1	10'-6"	142
14P40	5	5	2	9'-3"	48
14P57	5	5	2	6'-3"	33
BASCULE PIER 14 - SECTION K-K (REF. DWG. B132)					
14P2	12	8	1	8'-6"	272
14P8	36	5	1	5'-1"	191
14P11	12	8	STR	18'-7"	595
14P26	18	5	STR	6'-0"	113
14P28	36	6	1	6'-6"	351
14P29	8	6	STR	8'-0"	96
14P33	5	7	2	31'-1"	318
14P34	10	7	1	17'-10"	365
14P35	17	4	5	7'-9"	88
14P44	18	5	STR	6'-11"	130
BASCULE PIER 14 - SOUTH WALL (REF. DWGS. B128, B132)					
14P1	43	8	1	11'-6"	1,320
14P2	37	8	1	8'-6"	840
14P3	13	8	STR	27'-1"	940
14P4	11	8	STR	30'-1"	884
14P7	60	5	1	8'-6"	532
14P8	60	5	1	5'-1"	318
14P14	16	5	STR	3'-0"	50
14P19	26	5	STR	49'-10"	1,351
14P28	16	6	1	6'-6"	156
14P58	8	8	STR	16'-3"	347
14P59	4	8	STR	19'-3"	206
14P60	8	8	STR	16'-6"	352
14P61	8	8	STR	13'-6"	288
14P62	22	8	STR	13'-0"	764
14P63	3	8	STR	12'-7"	101
14P64	3	8	STR	15'-7"	125
14P65	44	9	1	15'-3"	2,281
14P66	44	9	1	10'-6"	1,571
14P67	44	9	STR	25'-10"	3,865
14P68	44	9	STR	21'-1"	3,154
14P69	416	5	5	9'-5"	4,086
14P70	502	5	6	3'-5"	1,789
14P71	16	8	1	18'-9"	801
14P72	16	8	1	15'-0"	641
14P73	43	5	5	10'-11"	490
14P75	34	6	STR	12'-3"	626
BASCULE PIER 14 - SOUTH WALL (REF. DWGS. B128, B132) (CONTINUED)					
14P76	28	5	1	12'-4"	360
14P77	3	5	STR	24'-6"	77
14P78	14	5	STR	10'-6"	153
14P79	30	6	STR	12'-3"	552
14P80	8	5	1	9'-6"	79
14P81	6	4	1	5'-3"	21
14P101	6	6	STR	8'-0"	72
BASCULE PIER 14 - NORTH WALL (REF. DWG. B134)					
14P81	64	4	2	5'-3"	224
14P82	8	4	STR	7'-7"	41
14P83	8	4	STR	9'-5"	50
14P84	8	4	STR	5'-10"	31
BASCULE PIER 14 - HVAC WALL RECESS (REF. DWG. B125)					
14P85	8	5	STR	3'-8"	31
14P86	10	5	1	4'-4"	45
14P87	14	5	STR	6'-8"	97
14P88	14	5	4	4'-6"	66
14P89	22	5	2	5'-6"	126
14P90	10	6	STR	10'-6"	158
BASCULE PIER 14 - MACHINERY WALL EL. 5.50 (REF. DWG. B123)					
14P2	40	8	1	8'-6"	908
14P8	26	5	1	5'-1"	138
14P91	40	6	STR	13'-0"	781
14P93	26	5	STR	13'-5"	359
14P94	26	5	1	5'-0"	136
14P95	26	5	STR	5'-6"	149
14P96	26	5	1	6'-1"	165
BASCULE PIER 14 -MACHINERY SLAB EL. 5.50 (REF. DWG. B125)					
14P97	28	6	1	5'-0"	210
14P98	42	6	1	11'-0"	694
14P99	14	6	1	6'-6"	137
14P100	14	6	STR	13'-5"	279
14P101	14	6	STR	8'-0"	168
14P102	16	6	STR	19'-0"	457
BASCULE PIER 14 - COUNTERWEIGHT BUMPER (REF. DWG. B135)					
14P2	32	8	1	8'-6"	726
14P103	14	8	4	7'-0"	262
14P104	14	8	4	13'-6"	505
14P105	8	6	2	19'-5"	233
14P106	2	6	2	16'-11"	51
14P107	2	6	2	13'-11"	42
14P108	2	6	2	10'-11"	33
14P109	16	5	2	15'-6"	259

BAR TYPES

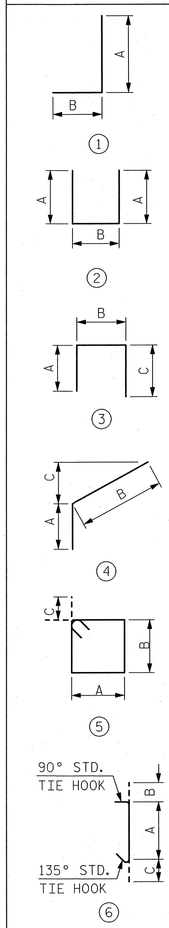

ALL BAR DIMENSIONS ARE OUT TO OUT

TYPE 1

MARK	SIZE	A	B
14P1	8	9'-6"	2'-0"
14P2	8	6'-6"	2'-0"
14P7	5	4'-3"	4'-3"
14P8	5	4'-3"	10"
14P15	5	3'-10"	10"
14P17	5	2'-9"	10"
14P22	4	2'-6"	8"
14P23	4	2'-6"	2'-6"
14P28	6	5'-6"	1'-0"
14P34	7	16'-8"	1'-2"
14P36	5	9'-6"	1'-0"
14P37	5	6'-3"	1'-6"
14P38	5	3'-3"	10"
14P48	7	24'-3"	1'-2"
14P65	9	13'-0"	2'-3"
14P66	9	8'-3"	2'-3"
14P71	8	17'-5"	1'-4"
14P72	8	13'-8"	1'-4"
14P76	5	11'-6"	10"
14P86	5	2'-8"	1'-6"
14P94	5	2'-6"	2'-6"
14P96	5	5'-3"	10"
14P97	6	2'-6"	2'-6"
14P98	6	8'-6"	2'-6"
14P99	6	4'-0"	2'-6"
14P113	6	3'-6"	1'-6"

TYPE 2

MARK	SIZE	A	B
14P24	5	4'-0"	2'-3"
14P33	7	1'-2"	18'-9"
14P40	5	3'-6"	2'-3"
14P57	5	2'-0"	2'-3"
14P80	5	3'-6"	2'-6"
14P81	4	1'-6"	2'-3"
14P89	5	2'-0"	1'-7"
14P105	6	8'-3"	2'-11"
14P106	6	7'-0"	2'-11"
14P107	6	5'-6"	2'-11"
14P108	6	4'-0"	2'-11"
14P109	5	6'-3"	3'-0"
14P120	4	2'-6"	8"
14P152	7	1'-2"	29'-6"

TYPE 3

MARK	SIZE	A	B	C
14P122	5	8"	3'-6"	1'-6"
14P123	5	8"	3'-9"	1'-6"
14P124	5	1'-6"	6'-3"	1'-6"
14P131	5	8"	4'-6"	1'-6"

TYPE 4

MARK	SIZE	A	B	C
14P31	7	4'-10"	3'-6"	3'-3"
14P88	5	2'-0"	2'-6"	1'-9"
14P103	8	3'-6"	3'-6"	3'-3"
14P104	8	4'-9"	8'-9"	2'-10"

TYPE 5

MARK	SIZE	A	B	C
14P32	4	1'-9"	1'-2"	4½"
14P35	4	1'-9"	1'-9"	4½"
14P50	4	2'-0"	1'-9"	4½"
14P54	4	1'-0"	1'-3"	4½"
14P69	5	1'-7"	2'-8"	5½"
14P73	5	2'-6"	2'-6"	5½"

TYPE 6

MARK	SIZE	A	B	C
14P70	5	2'-6"	5½"	5½"
CT1	5	2'-6"	5½"	5½"
CT2	5	2'-3"	5½"	5½"
CT3	5	1'-9"	5½"	5½"
CT4	5	4'-9"	5½"	5½"

SUBSTRUCTURE BILL OF MATERIALS

	CLASS AA CONCRETE	EPOXY COATED REINFORCING STEEL	CLASS AA CONCRETE, WHITE
	(CU.YDS.)	(LBS.)	(CU.YDS.)
PIER 14	700	81,309	74

BAR LEGEND:

14 P 1

- 14 — BAR LOCATION
  - 13 INDICATES PIER 13
  - 14 INDICATES PIER 14
- 1 — BAR NUMBER
- P — ELEMENT IDENTIFICATION
  - DP INDICATES DRILLED PIER
  - PF INDICATES PIER FOOTING
  - P INDICATES PIER
  - C INDICATES CONCRETE RAILING
  - LP INDICATES LIGHT POLE

NORTH CAROLINA PROFESSIONAL ENGINEER SEAL 12916 PAUL J. BARBER 10/26/06

PROJECT NO. B-2532

CRAVEN COUNTY

STATION: 31+21.29 -L-

STATE OF NORTH CAROLINA
DEPARTMENT OF TRANSPORTATION
RALEIGH, NC

BASCULE PIER 14
BAR LIST AND QUANTITIES

HNTB NORTH CAROLINA, P.C.
343 E. Six Forks Rd., Suite 200, Raleigh, N.C. 27609

DRAWN BY SPL DATE 10/06
CHECKED BY GT DATE 10/06

DWG. NO. B195

REVISIONS						SHEET NO.
NO.	BY	DATE	NO.	BY	DATE	S-217
1			3			TOTAL SHEETS
2			4			348

sIPt: "A" WO1080
WS: 0000000 0000
J:\3000\42873 "Alfred Cunningham\OGN 100% Submission\B2532_SD_B195_P14barlist.dgn

REINFORCING BAR SCHEDULE

BASCULE PIER 14

MARK	NO.	SIZE	TYPE	LENGTH	WEIGHT (LBS.)	MARK	NO.	SIZE	TYPE	LENGTH	WEIGHT (LBS.)
BASCULE PIER 14 - EAST WALL SAFETY WALK SLAB (REF. DWG. B127)											
14P7	1	5	1	8'-6''	9						
14P8	1	5	1	5'-1''	5						
14P46	44	5	STR	4'-6''	207						
14P113	12	5	2	5'-9''	72						
14P122	36	5	3	5'-8''	213						
14P123	8	5	3	5'-11''	49						
14P124	8	5	3	9'-3''	77						
14P125	15	4	STR	10'-9''	108						
14P126	6	4	STR	35'-6''	142						
BASCULE PIER 14 - WEST WALL SLAB (REF. DWG. B127)											
14P7	2	5	1	8'-6''	18						
14P129	41	5	STR	4'-6''	192						
14P130	7	4	STR	41'-0''	192						
14P131	41	5	3	6'-8''	285						
14P132	1	7	STR	35'-9''	73						
BASCULE PIER 14 - CROSS TIES (REF. DWG. B123)											
CT1	298	5	6	3'-5''	1,062						
CT2	650	5	6	3'-2''	2,147						
CT3	1512	5	6	2'-8''	4,205						

BAR TYPES

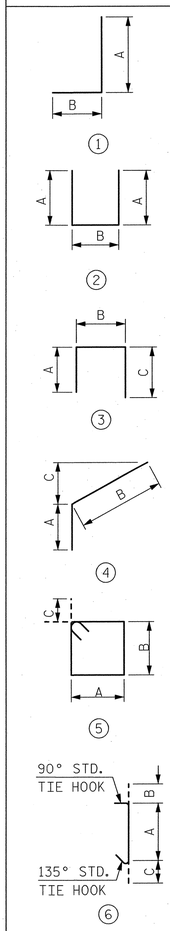

ALL BAR DIMENSIONS ARE OUT TO OUT

TYPE 1

MARK	SIZE	A	B
14P1	8	9'-6"	2'-0"
14P2	8	6'-6"	2'-0"
14P7	5	4'-3"	4'-3"
14P8	5	4'-3"	10"
14P15	5	3'-10"	10"
14P17	5	2'-9"	10"
14P22	4	2'-6"	8"
14P23	4	2'-6"	2'-6"
14P28	6	5'-6"	1'-0"
14P34	7	16'-8"	1'-2"
14P36	5	9'-6"	1'-0"
14P37	5	6'-3"	1'-6"
14P38	5	3'-3"	10"
14P48	7	24'-3"	1'-2"
14P65	9	13'-0"	2'-3"
14P66	9	8'-3"	2'-3"
14P71	8	17'-5"	1'-4"
14P72	8	13'-8"	1'-4"
14P76	5	11'-6"	10"
14P86	5	2'-8"	1'-6"
14P94	5	2'-6"	2'-6"
14P96	5	5'-3"	10"
14P97	6	2'-6"	2'-6"
14P98	6	8'-6"	2'-6"
14P99	6	4'-0"	2'-6"
14P113	6	3'-6"	1'-6"

TYPE 2

MARK	SIZE	A	B
14P24	5	4'-0"	2'-3"
14P33	7	1'-2"	18'-9"
14P40	5	3'-6"	2'-3"
14P57	5	2'-0"	2'-3"
14P80	5	3'-6"	2'-6"
14P81	4	1'-6"	2'-3"
14P89	5	2'-0"	1'-7"
14P105	6	8'-3"	2'-11"
14P106	6	7'-0"	2'-11"
14P107	6	5'-6"	2'-11"
14P108	6	4'-0"	2'-11"
14P109	5	6'-3"	3'-0"
14P120	4	2'-6"	8"
14P152	7	1'-2"	29'-6"

TYPE 3

MARK	SIZE	A	B	C
14P122	5	8"	3'-6"	1'-6"
14P123	5	8"	3'-9"	1'-6"
14P124	5	1'-6"	6'-3"	1'-6"
14P131	5	8"	4'-6"	1'-6"

TYPE 4

MARK	SIZE	A	B	C
14P31	7	4'-10"	3'-6"	3'-3"
14P88	5	2'-0"	2'-6"	1'-9"
14P103	8	3'-6"	3'-6"	3'-3"
14P104	8	4'-9"	8'-9"	2'-10"

TYPE 5

MARK	SIZE	A	B	C
14P32	4	1'-9"	1'-2"	4½"
14P35	4	1'-9"	1'-9"	4½"
14P50	4	2'-0"	1'-9"	4½"
14P54	4	1'-0"	1'-3"	4½"
14P69	5	1'-7"	2'-8"	5½"
14P73	5	2'-6"	2'-6"	5½"

TYPE 6

MARK	SIZE	A	B	C
14P70	5	2'-6"	5½"	5½"
CT1	5	2'-6"	5½"	5½"
CT2	5	2'-3"	5½"	5½"
CT3	5	1'-9"	5½"	5½"
CT4	5	4'-9"	5½"	5½"

BAR LEGEND:

14 P 1

- BAR LOCATION
  - 13 INDICATES PIER 13
  - 14 INDICATES PIER 14
- BAR NUMBER
- ELEMENT IDENTIFICATION
  - DP INDICATES DRILLED PIER
  - PF INDICATES PIER FOOTING
  - P INDICATES PIER
  - C INDICATES CONCRETE RAILING
  - LP INDICATES LIGHT POLE

NORTH CAROLINA PROFESSIONAL SEAL 12916 ENGINEER PAUL J. BARBER 10/20/06

PROJECT NO. B-2532

CRAVEN COUNTY

STATION: 31+21.29 -L-

STATE OF NORTH CAROLINA
DEPARTMENT OF TRANSPORTATION
RALEIGH, NC

BASCULE PIER 14
BAR LIST AND QUANTITIES

HNTB NORTH CAROLINA, P.C.
343 E. Six Forks Rd., Suite 200, Raleigh, N.C. 27609

DRAWN BY SPL DATE 10/06
CHECKED BY GT DATE 10/06

DWG. NO. B196

REVISIONS						SHEET NO.
NO.	BY	DATE	NO.	BY	DATE	S-218
1			3			TOTAL SHEETS
2			4			348

sfn_ AT 10/20/2006
11:06:07 AM EDT
J:\cadd\43573 - Alfred Cunningham\DGN 100% Submission\B2532_SD_B196_P14barlistat.dgn

REINFORCING BAR SCHEDULE

PIER 14 - CONTROL HOUSE

MARK	NO.	SIZE	TYPE	LENGTH	WEIGHT (LBS.)
BASCULE PIER 14 - GENERATOR ROOM SLAB (REF. DWGS. B143)					
14P14	16	5	STR	3'-0"	50
14P110	42	6	1	9'-6"	599
14P111	42	6	1	16'-6"	1,041
14P112	42	6	STR	17'-6"	1,104
14P114	6	6	1	7'-0"	63
14P115	6	6	1	12'-6"	113
14P116	6	6	STR	3'-3"	29
14P117	32	4	1	4'-6"	96
14P118	26	4	STR	25'-10"	449
14P119	6	4	STR	13'-4"	53
14P120	6	4	STR	8'-10"	35
14P121	16	5	STR	7'-0"	117
14P128	6	6	STR	11'-6"	104
BASCULE PIER 14 - ELECTRICAL ROOM SLAB (REF. DWGS. B144)					
14P24	16	6	2	9'-3"	222
14P38	16	7	1	17'-10"	583
14P48	12	6	1	7'-9"	140
14P50	35	4	5	4'-9"	111
14P54	17	4	5	4'-5"	50
14P113	115	6	1	5'-0"	864
14P133	24	6	STR	28'-6"	1,027
14P134	36	6	STR	18'-0"	973
14P135	74	6	STR	19'-6"	2,167
14P136	16	6	STR	6'-8"	160
14P137	5	4	7	9'-5"	31
14P139	2	6	STR	10'-0"	30
14P140	2	7	STR	29'-6"	121
14P141	4	7	STR	19'-6"	159
14P142	4	7	STR	8'-0"	65
14P154	10	3	8	1'-7"	6
BASCULE PIER 14 - CONTROL ROOM SLAB (REF. DWG. B145) 3'-5"					
14P155	73	4	9		167
BASCULE PIER 14 - CONTROL HOUSE SOUTH WALL (REF. DWGS. B141)					
14P1	6	8	1	8'-6"	184
14P2	6	8	1	5'-1"	136
14P8	36	5	1	3'-0"	191
14P14	16	5	STR	3'-2"	50
14P22	36	4	1	5'-0"	76
14P23	36	4	1	4'-8"	120
14P24	10	5	2	6'-2"	49
14P25	20	5	2	6'-0"	129
14P26	18	5	STR	12'-8"	113
14P27	42	5	STR	6'-6"	555
14P28	36	6	1	8'-0"	351
14P29	16	6	STR	21'-1"	192
14P33	5	7	2	17'-10"	215
14P34	10	7	1	8'-6"	365
14P41	14	4	STR	4'-6"	79
14P46	4	5	STR	8'-2"	19
14P47	17	4	2	22'-6"	93
14P51	6	8	STR	19'-6"	360
14P52	6	8	STR	17'-10"	312
14P55	10	4	STR	9'-0"	119
14P56	8	5	STR	9'-0"	75
14P57	18	5	STR		169
BASCULE PIER 14 - CONTROL HOUSE EAST WALL (REF. DWGS. B141)					
14P24	10	5	2	6'-2"	49
14P25	18	5	2	12'-8"	116
14P27	80	5	STR	16'-0"	1,057
14P30	30	7	STR	6'-7"	981
14P32	39	4	5	25'-10"	172
14P41	26	6	STR	16'-0"	1,009
14P42	48	6	2	3'-2"	1,154
14P22	46	4	1	8'-2"	97
14P47	21	4	STR	8'-4"	115
14P31	22	7	STR	4'-6"	375
14P46	22	5	STR	5'-8"	103
14P120	21	4	2	8'-7"	79
14P138	24	7	7	14'-0"	421
14P150	42	4	STR	14'-0"	393
14P151	2	5	STR	32'-1"	29
14P152	9	7	2		590

MARK	NO.	SIZE	TYPE	LENGTH	WEIGHT (LBS.)
BASCULE PIER 14 - CONTROL HOUSE NORTH WALL (REF. DWGS. B142)					
14P1	6	8	1	11'-6"	184
14P2	6	8	1	8'-6"	136
14P8	36	5	1	5'-1"	191
14P14	16	5	STR	3'-0"	50
14P22	36	4	1	3'-2"	76
14P23	36	4	1	5'-0"	120
14P25	14	5	2	6'-2"	90
14P26	18	5	STR	6'-0"	113
14P27	42	5	STR	12'-8"	555
14P28	36	6	1	6'-6"	351
14P29	16	6	STR	8'-0"	192
14P33	5	7	2	21'-1"	215
14P34	10	7	1	17'-10"	365
14P47	13	4	2	8'-2"	71
14P51	6	8	STR	22'-6"	360
14P52	6	8	STR	19'-6"	312
14P53	8	5	STR	9'-8"	81
14P55	20	4	STR	17'-10"	238
14P57	18	5	STR	9'-0"	169
14P137	6	4	STR	11'-0"	44
BASCULE PIER 14 - CONTROL HOUSE WEST WALL (REF. DWGS. B132, B142)					
14P2	71	8	1	8'-6"	1,611
14P8	116	5	1	5'-1"	615
14P16	58	5	STR	36'-9"	2,223
14P17	71	5	1	3'-7"	265
14P20	71	8	STR	14'-4"	2,717
14P22	6	4	2	3'-2"	13
14P25	29	5	STR	6'-2"	187
14P37	72	5	1	7'-9"	582
14P43	71	8	STR	8'-0"	1,517
14P44	71	8	STR	8'-6"	1,611
14P153	6	4	STR	27'-10"	112

BAR TYPES

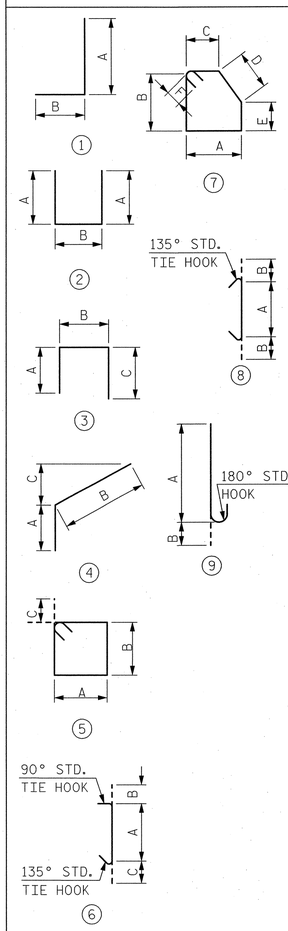

ALL BAR DIMENSIONS ARE OUT TO OUT

TYPE 1

MARK	SIZE	A	B
14P1	8	9'-6"	2'-0"
14P2	8	6'-6"	2'-0"
14P7	5	4'-3"	4'-3"
14P8	5	4'-3"	10"
14P15	5	3'-10"	10"
14P17	5	2'-9"	10"
14P22	4	2'-6"	8"
14P23	4	2'-6"	2'-6"
14P28	6	5'-6"	1'-0"
14P34	7	16'-8"	1'-2"
14P36	5	9'-6"	1'-0"
14P37	5	6'-3"	1'-6"
14P38	5	3'-3"	10"
14P48	7	24'-3"	1'-2"
14P65	9	13'-0"	2'-3"
14P66	9	8'-3"	2'-3"
14P71	8	17'-5"	1'-4"
14P72	8	13'-8"	1'-4"
14P76	5	11'-6"	10"
14P86	5	2'-8"	1'-6"
14P94	5	2'-6"	2'-6"
14P96	5	5'-3"	10"
14P97	6	2'-6"	2'-6"
14P98	6	8'-6"	2'-6"
14P99	6	4'-0"	2'-6"
14P113	6	3'-6"	1'-6"

TYPE 2

MARK	SIZE	A	B
14P24	5	4'-0"	2'-3"
14P33	7	1'-2"	18'-9"
14P40	5	3'-6"	2'-3"
14P57	5	2'-0"	2'-3"
14P80	5	3'-6"	2'-6"
14P81	4	1'-6"	2'-3"
14P89	5	2'-0"	1'-7"
14P105	6	8'-3"	2'-11"
14P106	6	7'-0"	2'-11"
14P107	6	5'-6"	2'-11"
14P108	6	4'-0"	2'-11"
14P109	5	6'-3"	3'-0"
14P120	4	2'-6"	8"
14P152	7	1'-2"	29'-6"

TYPE 3

MARK	SIZE	A	B	C
14P122	5	8"	3'-6"	1'-6"
14P123	5	8"	3'-9"	1'-6"
14P124	5	1'-6"	6'-3"	1'-6"
14P131	5	8"	4'-6"	1'-6"

TYPE 4

MARK	SIZE	A	B	C
14P31	7	4'-10"	3'-6"	3'-3"
14P88	5	2'-0"	2'-6"	1'-9"
14P103	8	3'-6"	3'-6"	3'-3"
14P104	8	4'-9"	8'-9"	2'-10"

TYPE 5

MARK	SIZE	A	B	C
14P32	4	1'-9"	1'-2"	4½"
14P35	4	1'-9"	1'-9"	4½"
14P50	4	2'-0"	1'-9"	4½"
14P54	4	1'-0"	1'-3"	4½"
14P69	5	1'-7"	2'-8"	5½"
14P73	5	2'-6"	2'-6"	5½"

TYPE 6

MARK	SIZE	A	B	C
14P70	5	2'-6"	5½"	5½"
CT1	5	2'-6"	5½"	5½"
CT2	5	2'-3"	5½"	5½"
CT3	5	1'-9"	5½"	5½"
CT4	5	4'-9"	5½"	5½"

TYPE 8

MARK	SIZE	A	B
14P154	3	10½"	4"

TYPE 9

MARK	SIZE	A	B
14P155	4	2'-11"	6"

TYPE 7

MARK	SIZE	A	B	C	D	E	F
14P137	4	2'-11"	2'-3"	10"	1'-7"	1'-1"	4½"
14P138	7	2'-4"	1'-10"	1'-8"	9"	1'-3"	9"

BILL OF MATERIALS - CONTROL HOUSE / ELECTRICAL ROOM - STRUCTURE (LUMP SUM PAY ITEM)

	CLASS AA CONCRETE	CLASS AA CONCRETE (SAND LIGHWEIGHT)	EPOXY COATED REINFORCING STEEL	STRUCTURAL STEEL	FLOOR METAL DECK	ROOF METAL DECK
	(CY)	(CY)	(LBS.)	(LBS.)	(SF)	(SF)
CONTROL HOUSE	37	7	36,791	APPROX. 42,000	513	942

BAR LEGEND:

14 P 1

- BAR LOCATION
  - 13 INDICATES PIER 13
  - 14 INDICATES PIER 14
- BAR NUMBER
- ELEMENT IDENTIFICATION
  - DP INDICATES DRILLED PIER
  - PF INDICATES PIER FOOTING
  - P INDICATES PIER
  - C INDICATES CONCRETE RAILING
  - LP INDICATES LIGHT POLE

NORTH CAROLINA PROFESSIONAL SEAL 12916 ENGINEER PAUL J. BARBER 10-12-06

PROJECT NO. B-2532

CRAVEN **COUNTY**

STATION: 31+21.29 -L-

STATE OF NORTH CAROLINA
DEPARTMENT OF TRANSPORTATION
RALEIGH, NC

CONTROL HOUSE REINFORCEMENT AND QUANTITIES

HNTB NORTH CAROLINA, P.C.
343 E. Six Forks Rd., Suite 200, Raleigh, N.C. 27609

DRAWN BY SPL DATE 10/06
CHECKED BY GT DATE 10/06

DWG. NO. **B197**

REVISIONS					
NO.	BY	DATE	NO.	BY	DATE
1			3		
2			4		

SHEET NO. S-219

TOTAL SHEETS 348

jwing JT NYDOT2
10/OCT/2006
J:\cadd\42873 - Alfred Cunningham\DGN\100% Submission\B2532_SD_B197_CHbarlist.dgn

REINFORCING BAR SCHEDULE

SPAN "N" - SOUTH BASCULE LEAF

DECK SLAB

MARK	NO.	SIZE	TYPE	LENGTH	WEIGHT (LBS.)
A1	388	#6	STR	35'-9"	20,834
B1	44	#5	STR	44'-0"	2,019
B2	44	#5	STR	56'-0"	2,570
B3	72	#5	STR	52'-6"	3,943
B4	72	#5	STR	47'-6"	3,567
B5	27	#4	STR	11'-7"	209
B6	9	#4	STR	14'-5"	87
B7	9	#4	STR	12'-11"	78
B8	9	#4	STR	15'-11"	96
B9	9	#4	STR	16'-9"	101
G1	98	#4	4	9'-1"	595
S1	98	#5	3	5'-10"	596
S2	98	#5	3	5'-10"	596

CLASSIC CONCRETE RAILING

MARK	NO.	SIZE	TYPE	LENGTH	WEIGHT (LBS.)
C1	136	#5	1	4'-6"	638
C2	87	#5	1	5'-8"	514
C3	222	#5	2	8'-6"	1,968
C4	1	#5	2	8'-8"	9
C5	4	#5	STR	16'-11"	71
C6	10	#5	STR	16'-1"	168
C7	2	#5	STR	15'-1"	31
C8	2	#5	STR	13'-1"	27
C9	2	#5	STR	14'-7"	30
C10	4	#7	STR	16'-11"	138
C11	10	#7	STR	16'-1"	329
C12	2	#7	STR	14'-1"	58
C13	2	#7	STR	13'-1"	53
C14	2	#7	STR	14'-7"	60

SPAN "N" - NORTH BASCULE LEAF

DECK SLAB

MARK	NO.	SIZE	TYPE	LENGTH	WEIGHT (LBS.)
A1	388	#6	STR	35'-9"	20,834
B1	44	#5	STR	44'-0"	2,019
B2	44	#5	STR	56'-0"	2,570
B3	72	#5	STR	52'-6"	3,943
B4	72	#5	STR	47'-6"	3,567
B5	9	#4	STR	16'-9"	101
B6	27	#4	STR	15'-11"	287
B7	9	#4	STR	14'-5"	87
B8	9	#4	STR	16'-4"	98
G1	98	#4	4	9'-1"	595
S1	98	#5	3	5'-10"	596
S2	98	#5	3	5'-10"	596

CLASSIC CONCRETE RAILING

MARK	NO.	SIZE	TYPE	LENGTH	WEIGHT (LBS.)
C1	135	#5	1	4'-6"	634
C2	135	#5	1	5'-8"	798
C3	268	#5	2	8'-6"	2,376
C4	2	#5	2	8'-8"	18
C5	4	#5	STR	16'-11"	71
C6	12	#5	STR	16'-1"	201
C9	4	#5	STR	14'-7"	61
C10	4	#7	STR	16'-11"	138
C11	12	#7	STR	16'-1"	394
C14	4	#7	STR	14'-7"	119
C15	2	#5	STR	16'-6"	34
C16	2	#5	STR	16'-2"	34
C17	2	#7	STR	15'-11"	65
C18	2	#7	STR	15'-3"	62

NOTE:

ALL REINFORCING STEEL IS EPOXY COATED

SUMMARY OF QUANTITIES CONCRETE DECK SLABS

POUR	CUBIC YARDS (CY)
1	48.1
2	26.6
3	23.3

SUMMARY OF QUANTITIES CONCRETE SIDEWALKS

POUR	CUBIC YARDS (CY)
1 TO 6	2.6

GROOVING BRIDGE FLOORS

SOUTH BASCULE SPAN "N"	2,501	SQ.FT.
NORTH BASCULE SPAN "N"	2,501	SQ.FT.
TOTAL	5,002	SQ.FT.

SUMMARY OF QUANTITIES CLASSIC CONCRETE BRIDGE RAILING

CLASSIC CONCRETE BRIDGE RAILING (CY)	CLASSIC CONCRETE BRIDGE RAILING, (SAND LIGHTWEIGHT) (CY)	EPOXY COATED REINFORCING STEEL, CONCRETE RAIL (LBS)
8.2	12.8	4,095
13.0	13.0	5,006
21.2	15.8	9,101

BAR TYPES

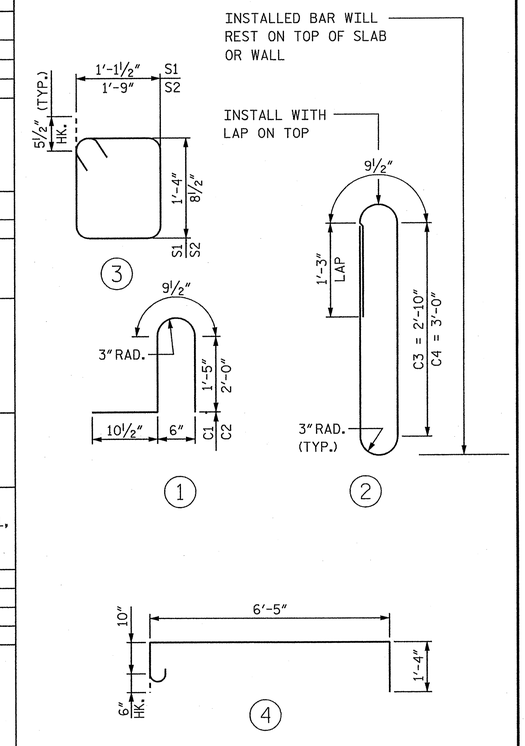

ALL BAR DIMENSIONS ARE OUT TO OUT

SUPERSTRUCTURE BILL OF MATERIAL

LOCATION	CONCRETE SAND LIGHTWEIGHT DECK SLABS (CY)	CONCRETE SAND LIGHTWEIGHT SIDEWALKS (CY)	EPOXY COATED REINFORCING STEEL (LBS)	GROOVING BRIDGE FLOORS (SF)	CLASSIC CONCRETE BRIDGE RAIL (LF)	CLASSIC CONCRETE BRIDGE RAIL (SAND LIGHTWEIGHT) (LF)
SOUTH BASCULE SPAN "N"	98.0	15.3	35,291	2,501	62.0	98.0
NORTH BASCULE SPAN "N"	98.0	15.3	35,293	2,501	98.0	98.0
TOTAL	196.0	30.6	70,584	5,002	160.0	196.0

SUPERSTRUCTURE REINFORCING STEEL LENGTHS ARE BASED ON THE FOLLOWING MINIMUM SPLICE LENGTHS

BAR SIZE	SUPERSTRUCTURE		PARAPET AND BARRIER RAIL
	EPOXY COATED	UNCOATED	
#4	2'-0'	1'-9"	2'-9"
#5	2'-6"	2'-2"	3'-5"
#6	3'-0"	2'-7"	4'-4"
#7	5'-3"	3'-6"	
#8	6'-10"	4'-7"	

PROJECT NO. B-2532

CRAVEN COUNTY

STATION: 31+21.29 -L-

NORTH CAROLINA PROFESSIONAL SEAL 12916 ENGINEER PAUL J. BARBER 12/7/06

HNTB NORTH CAROLINA, P.C.
343 E. Six Forks Rd., Suite 200, Raleigh, N.C. 27609

DRAWN BY SPL DATE 10/06
CHECKED BY GT DATE 10/06

DWG. NO. B198

STATE OF NORTH CAROLINA
DEPARTMENT OF TRANSPORTATION
RALEIGH, NC

BASCULE SPAN "N"
DECK SLAB AND
CONCRETE RAILING
BAR LIST AND QUANTITIES

REVISIONS						SHEET NO.
NO.	BY	DATE	NO.	BY	DATE	S-220
1			3			TOTAL SHEETS
2			4			348

sle=_____AT NYCD111
ofile=DC-2004 1.533
J:\cadd\42676 - Alfred Cunningham\DGN\100% Submission\B2532_SD_B198_Deckbarlist.dgn