STATE	STATE PROJECT REFERENCE NO.	SHEET NO.	TOTAL SHEETS
N.C.	B-2532		

STATE PROJ. NO.	F. A. PROJ. NO.	DESCRIPTION
32649.1.1	BRSTP-070B(4)	PE
32649.2.1	BRSTP-070B(4)	R /W & UTIL
32649.3.1	BRSTP-070B(4)	CONST

STATE OF NORTH CAROLINA
DIVISION OF HIGHWAYS

CRAVEN COUNTY

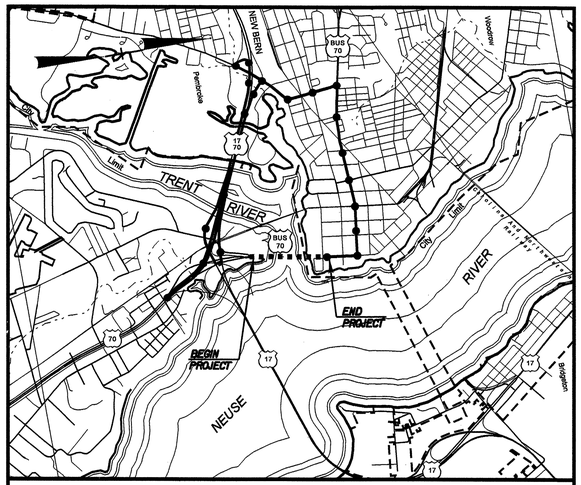

VICINITY MAP
DETOUR

LOCATION: *Bridge No. 60 Over Trent River on US 70 BUSINESS*

TYPE OF WORK: *Grading, Drainage, Paving, Structures & Signals.*

VOLUME 1 OF 3: *Bridge Approach Spans & Retaining Walls*

VOLUME 2 OF 3: *Bascule Span Bridge Drawings*

VOLUME 3 OF 3: *Architectural, Mechanical and Electrical Drawings*

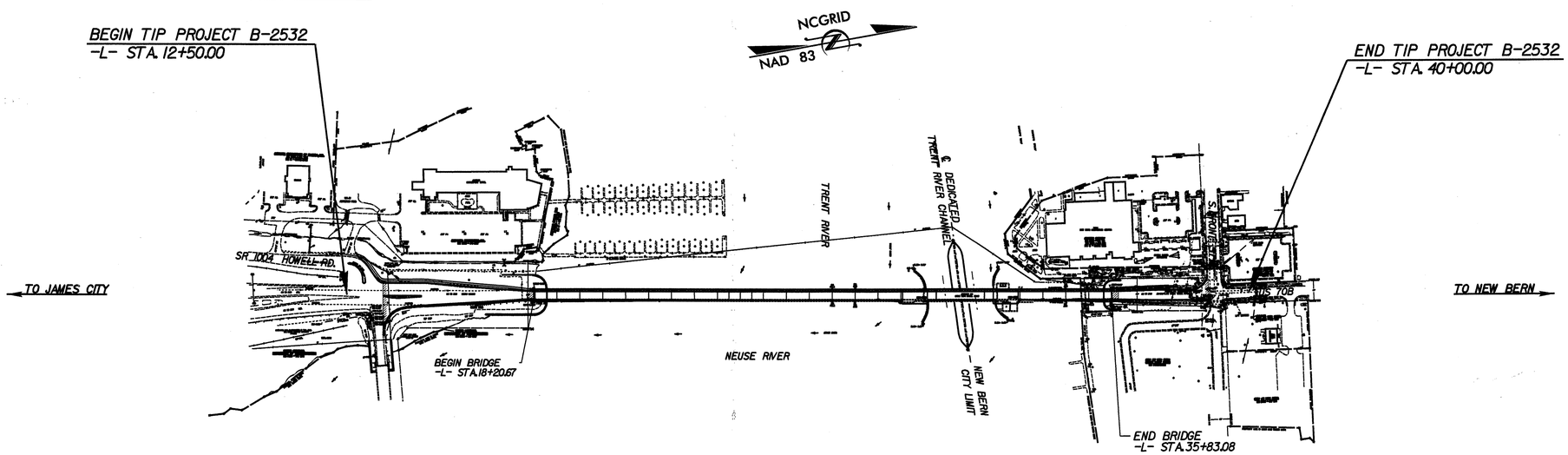

VOLUME 1 OF 3
BRIDGE APPROACH SPANS & RETAINING WALLS

TIP PROJECT: B-2532

CONTRACT: C201581

STRUCTURES

STATE OF NORTH CAROLINA DEPARTMENT OF TRANSPORTATION

DESIGN DATA

ADT 2004 = 16,200
ADT 2030 = 30,600
DHV = 10 %
D = 65 %
T = 3 % *
V = 40 MPH
FUNCTIONAL CLASS:
LOCAL URBAN
* TTST 1% DUAL 2%

PROJECT LENGTH

LENGTH ROADWAY TIP PROJECT B-2532 =	0.19 MI.
LENGTH STRUCTURE TIP PROJECT B-2532 =	0.33 MI.
TOTAL LENGTH TIP PROJECT B-2532 =	0.52 MI.

Prepared In the Office of:
DIVISION OF HIGHWAYS

2006 STANDARD SPECIFICATIONS

LETTING DATE:
FEBRUARY 20, 2007

R. M. GIROLAMI, P.E.
PROJECT ENGINEER

L.E. SUTTON, P.E.
PROJECT DESIGN ENGINEER

STRUCTURE DESIGN UNIT
1000 BIRCH RIDGE DR.
RALEIGH, N.C. 27610

DIVISION OF HIGHWAYS
STATE OF NORTH CAROLINA

P.E.
STATE DESIGN ENGINEER

DEPARTMENT OF TRANSPORTATION
FEDERAL HIGHWAY ADMINISTRATION

APPROVED
DIVISION ADMINISTRATOR DATE

09/08/99
24-OCT-2006 15:01
$$$$$$$$$$$$$$$$DGN$$$$$$$$$$$$$$$$$$$$
LSUTTON

VOLUME 1 OF 3

BRIDGE APPROACH SPANS & RETAINING WALLS

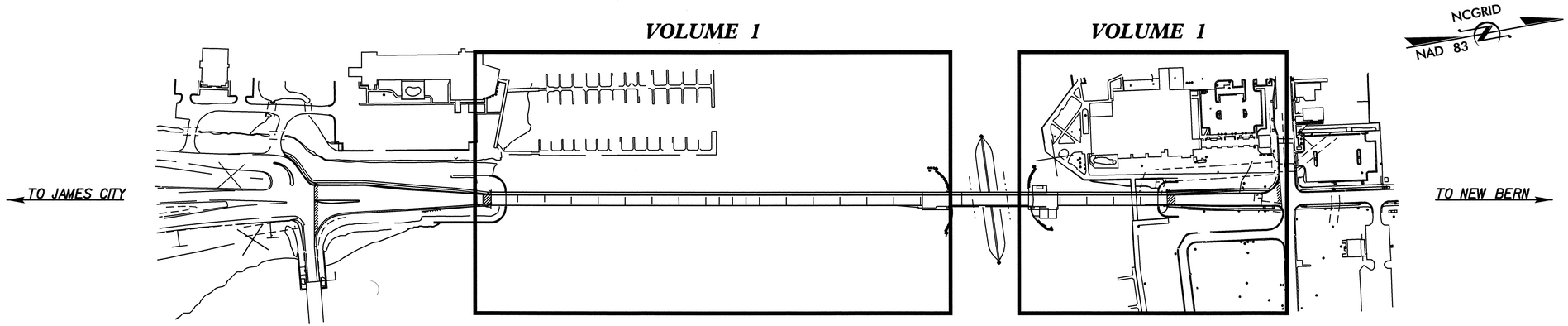

VOLUME 1	Bridge Approach Spans & Retaining Walls	S-1 thru S-118 & W-1 thru W-3
VOLUME 2	Bascule Span Bridge Drawings	S-119 thru S-220
VOLUME 3	Architectural, Mechanical and Electrical Drawings	S-221 thru S-348

INDEX OF SELECTED SHEETS	SHEET(S)
BRIDGE APPROACH SPANS TOTAL BILL OF MATERIAL	S-8
CONSTRUCTION STAGING (BASCULE SPAN)	S-119 & S-120
BASCULE SPAN INDEX OF DRAWINGS	S-121
BASCULE SPAN, ARCHITECTURAL, MECHANICAL, AND ELECTRIC TOTAL BILL OF MATERIAL	S-126
INDEX OF ARCHITECTURAL DRAWINGS	S-221
INDEX OF MECHANICAL DRAWINGS	S-244
INDEX OF ELECTRICAL DRAWINGS	S-262

PROJECT NO. B-2532
CRAVEN COUNTY
STATION:

STATE OF NORTH CAROLINA
DEPARTMENT OF TRANSPORTATION
RALEIGH

INDEX

REVISIONS

NO.	BY:	DATE:	NO.	BY:	DATE:
1			3		
2			4		

DRAWN BY : W.D. CRUTCHER DATE : 12-07-06
CHECKED BY : T.P GARRETT DATE : 12-07-06

07-DEC-2006 15:20
S:\PGS\Darrell\B-2532_sd_INDEX.dgn
dcrutcher

F.A. PROJECT NO. BRSTP-070B (4)

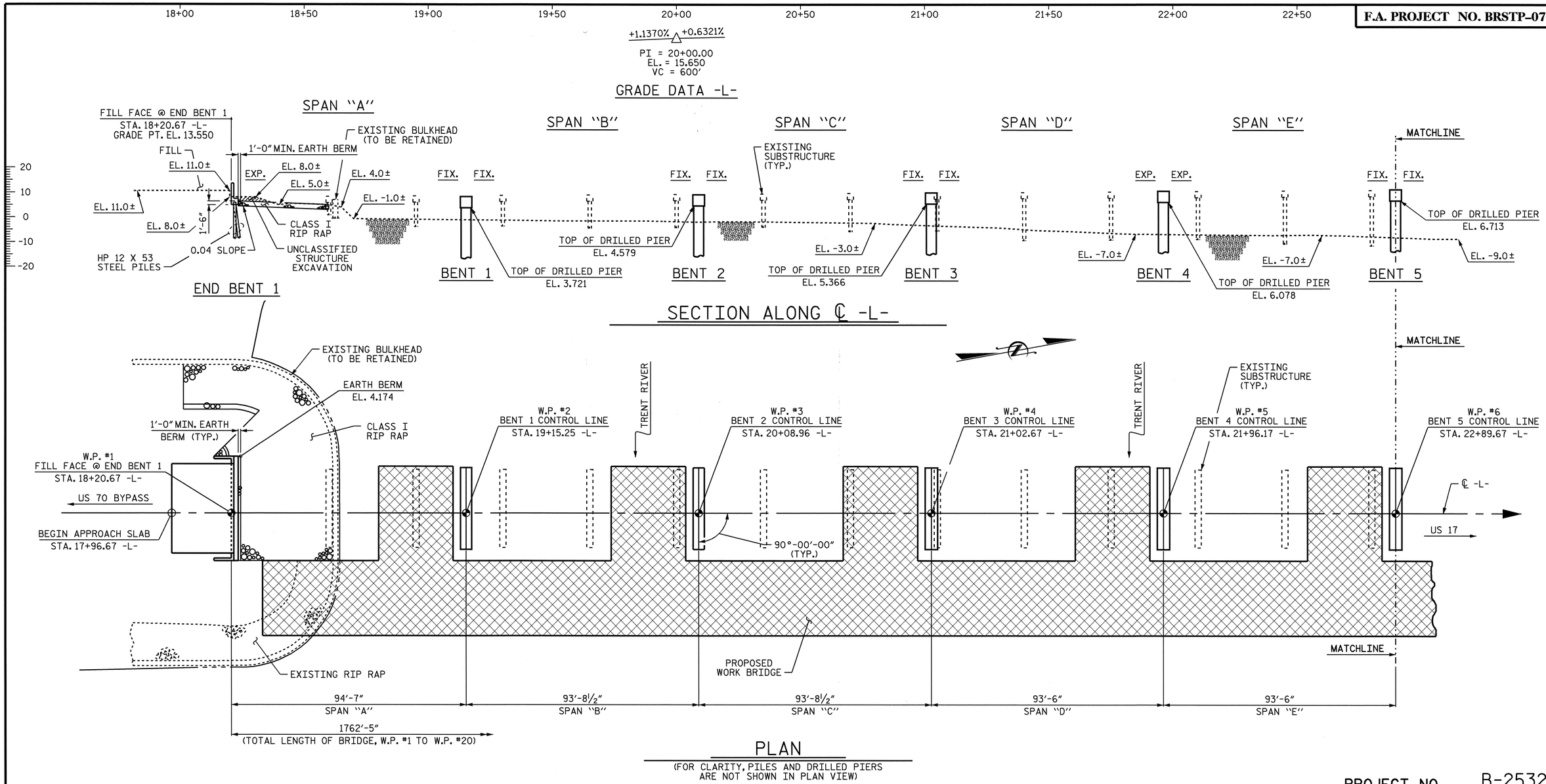

SECTION ALONG ℄ -L-

PLAN

(FOR CLARITY, PILES AND DRILLED PIERS ARE NOT SHOWN IN PLAN VIEW)

NEUSE RIVER

NEUSE RIVER

PROJECT NO. B-2532

CRAVEN COUNTY

STATION: 31+21.29 -L-

SHEET 1 OF 8 REPLACES BRIDGE #60

STATE OF NORTH CAROLINA
DEPARTMENT OF TRANSPORTATION
RALEIGH

GENERAL DRAWING

APPROACH SPANS FOR ALFRED CUNNINGHAM BRIDGE OVER TRENT RIVER ON US 70 BUSINESS BETWEEN US 70 BYPASS AND US 17

NORTH CAROLINA PROFESSIONAL SEAL 9804 ENGINEER ROY M. GIROLAMI 11-30-06

NORTH CAROLINA PROFESSIONAL SEAL 21638 ENGINEER LAURA E. SUTTON 11/30/06

REVISIONS						SHEET NO.
NO.	BY:	DATE:	NO.	BY:	DATE:	S-1
1			3			TOTAL SHEETS
2			4			348

DRAWN BY : P.C. BREWER DATE : 8/23/06
CHECKED BY : A.S. CALLAWAY DATE : 9/12/06

30-NOV-2006 11:53
r:\Structures\pbrewer\Microstation\B2532_sd_GD_01.dgn
lsutton

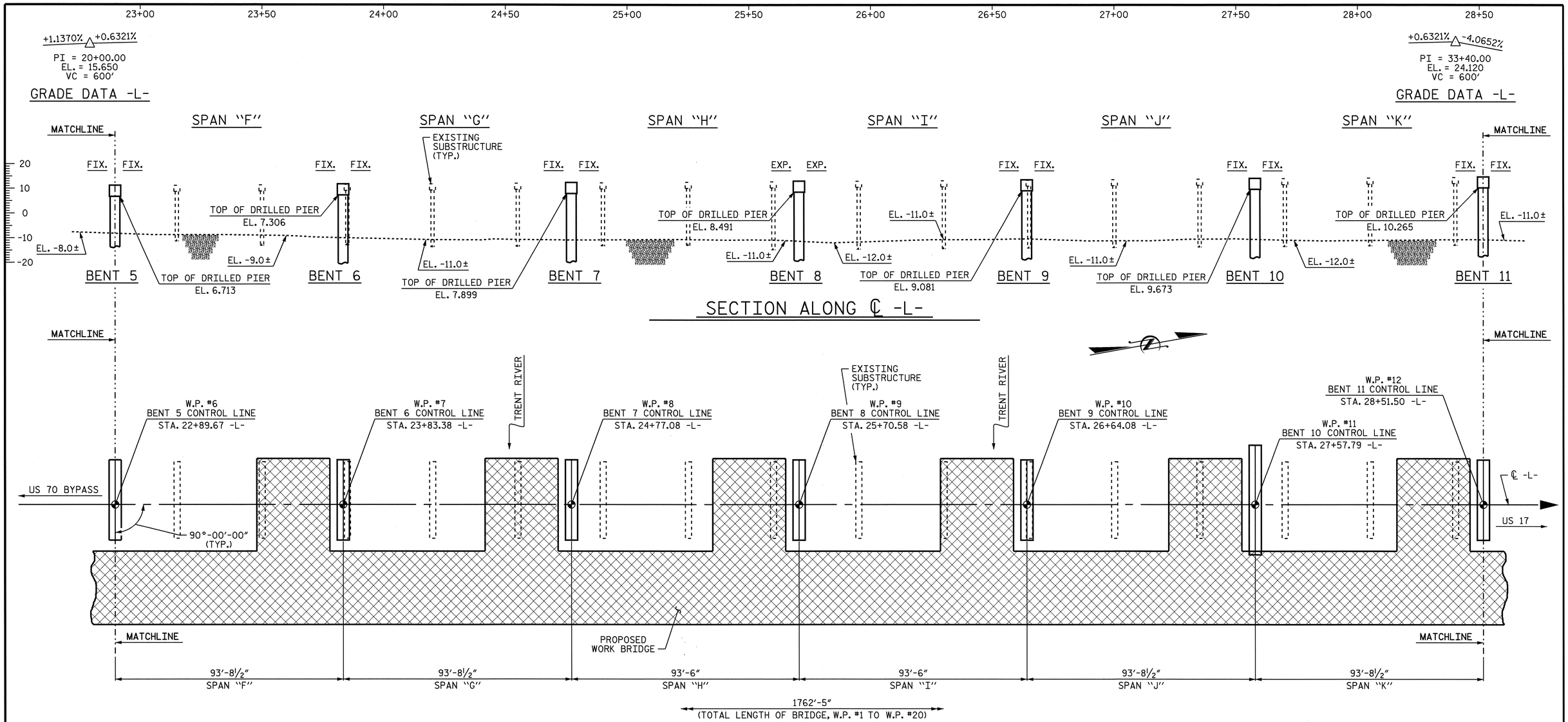

PROJECT NO. B-2532

CRAVEN COUNTY

STATION: 31+21.29 -L-

SHEET 2 OF 8

STATE OF NORTH CAROLINA
DEPARTMENT OF TRANSPORTATION
RALEIGH

GENERAL DRAWING

APPROACH SPANS FOR ALFRED CUNNINGHAM BRIDGE OVER TRENT RIVER ON US 70 BUSINESS BETWEEN US 70 BYPASS AND US 17

NORTH CAROLINA PROFESSIONAL SEAL 21638 ENGINEER LAURA E. SUTTON
11/30/06

REVISIONS						SHEET NO.
NO.	BY:	DATE:	NO.	BY:	DATE:	S-2
1			3			TOTAL SHEETS
2			4			348

DRAWN BY : P.C. BREWER DATE : 8/23/06
CHECKED BY : A.S. CALLAWAY DATE : 9/12/06

30-NOV-2006 11:53
r:\Structures\pbrewer\Microstation\B2532_sd_GD_01.dgn
lsutton

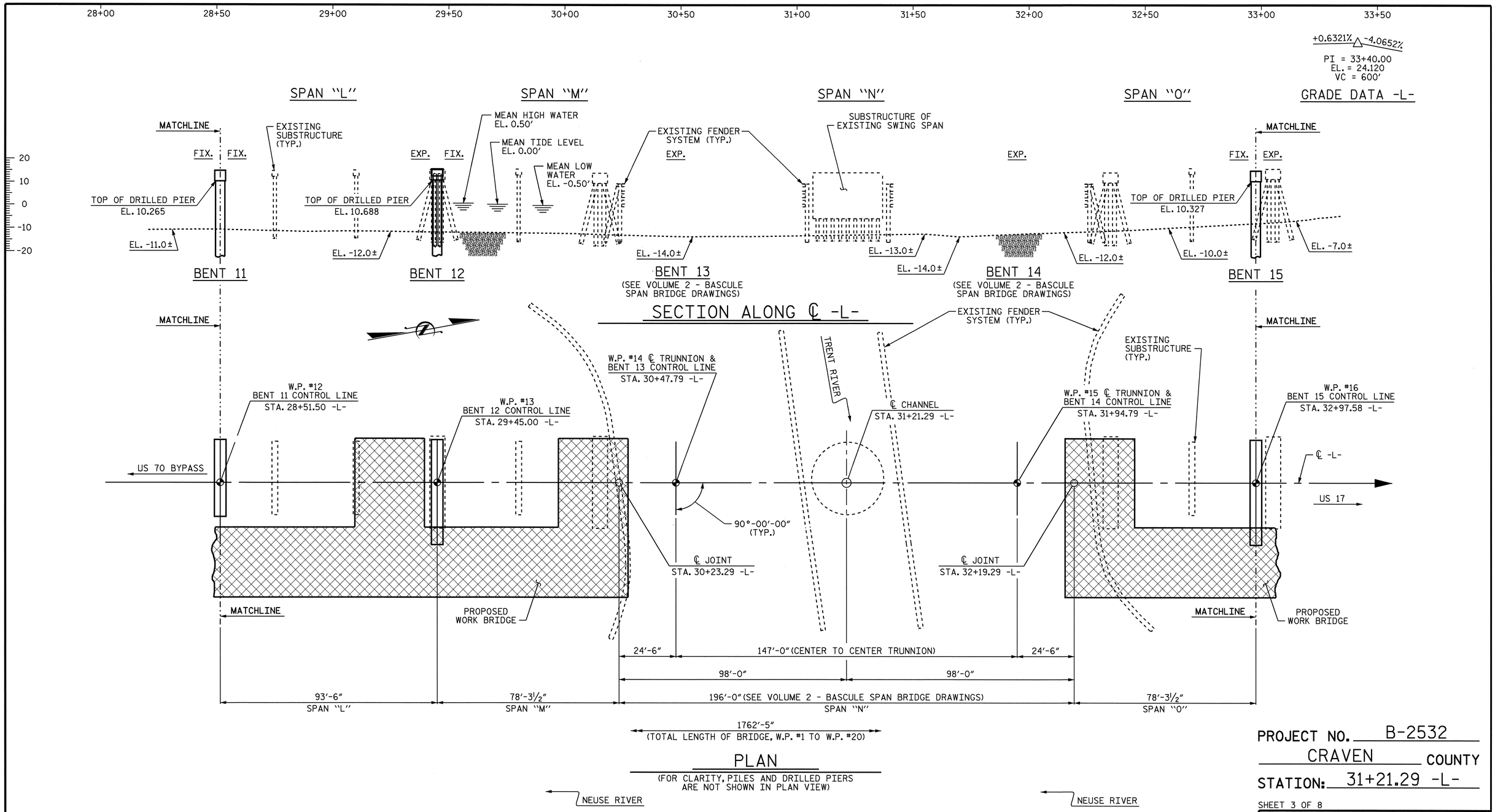

PROJECT NO. B-2532

CRAVEN COUNTY

STATION: 31+21.29 -L-

SHEET 3 OF 8

STATE OF NORTH CAROLINA
DEPARTMENT OF TRANSPORTATION
RALEIGH

GENERAL DRAWING

APPROACH SPANS FOR ALFRED CUNNINGHAM BRIDGE OVER TRENT RIVER ON US 70 BUSINESS BETWEEN US 70 BYPASS AND US 17

NORTH CAROLINA PROFESSIONAL SEAL 21638 ENGINEER LAURA E. SUTTON
11/20/06

REVISIONS						SHEET NO.
NO.	BY:	DATE:	NO.	BY:	DATE:	S-3
1			3			TOTAL SHEETS
2			4			348

DRAWN BY : P.C. BREWER DATE : 8/23/06
CHECKED BY : A.S. CALLAWAY DATE : 9/12/06

30-NOV-2006 11:52
r:\Structures\pbrewer\Microstation\B2532_sd_GD_01.dgn
lsutton

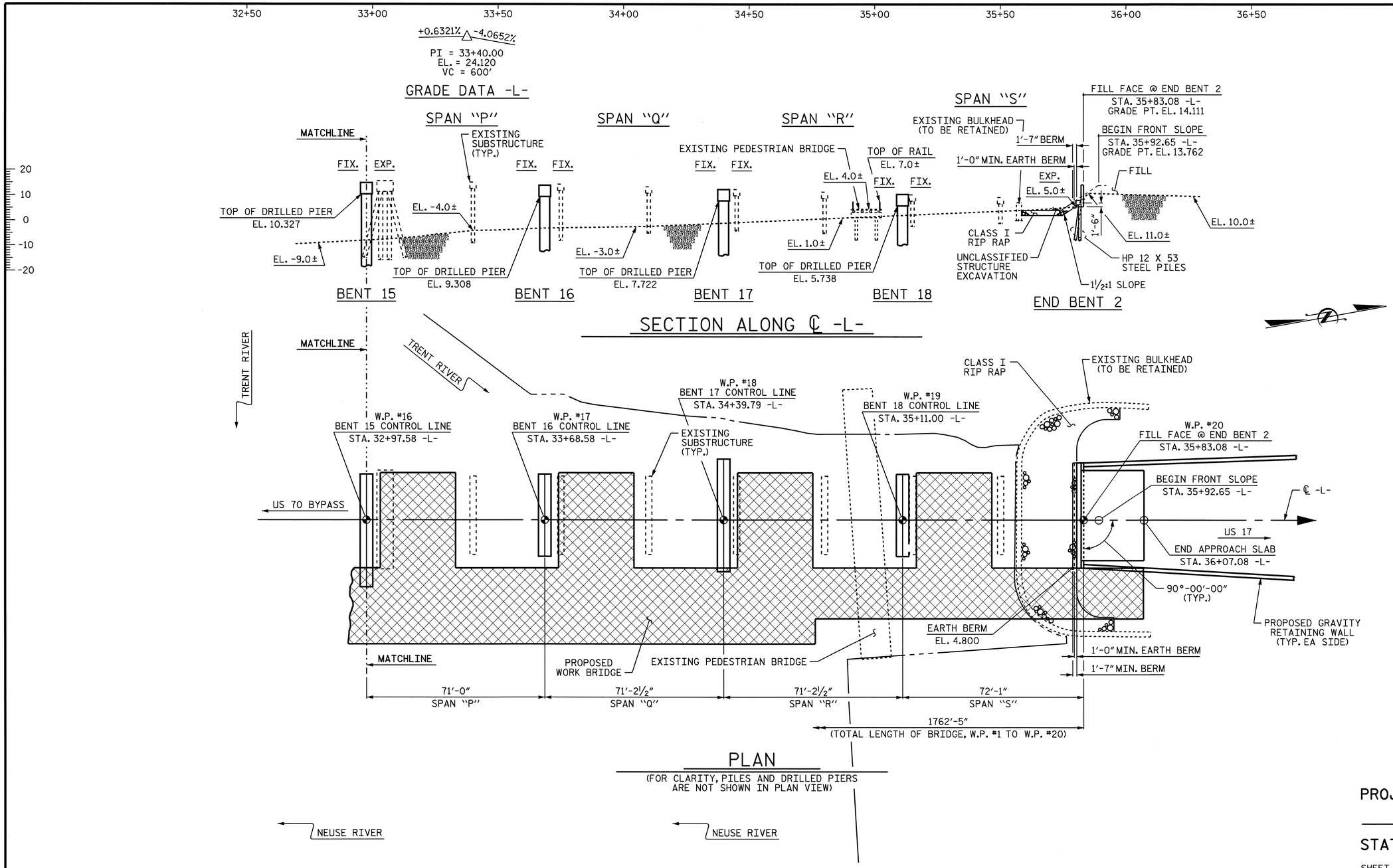

PROJECT NO. B-2532

CRAVEN COUNTY

STATION: 31+21.29 -L-

SHEET 4 OF 8

STATE OF NORTH CAROLINA
DEPARTMENT OF TRANSPORTATION
RALEIGH

GENERAL DRAWING

APPROACH SPANS FOR ALFRED CUNNINGHAM BRIDGE OVER TRENT RIVER ON US 70 BUSINESS BETWEEN US 70 BYPASS AND US 17

NORTH CAROLINA PROFESSIONAL SEAL 21638 ENGINEER LAURA E. SUTTON
11/30/06

REVISIONS						SHEET NO.
NO.	BY:	DATE:	NO.	BY:	DATE:	3-4
1			3			TOTAL SHEETS
2			4			348

DRAWN BY : P.C. BREWER DATE : 8/23/06
CHECKED BY : A.S. CALLAWAY DATE : 9/12/06

30-NOV-2006 11:52
r:\Structures\pbrewer\Microstation\B2532_sd_GD_01.dgn
lsutton

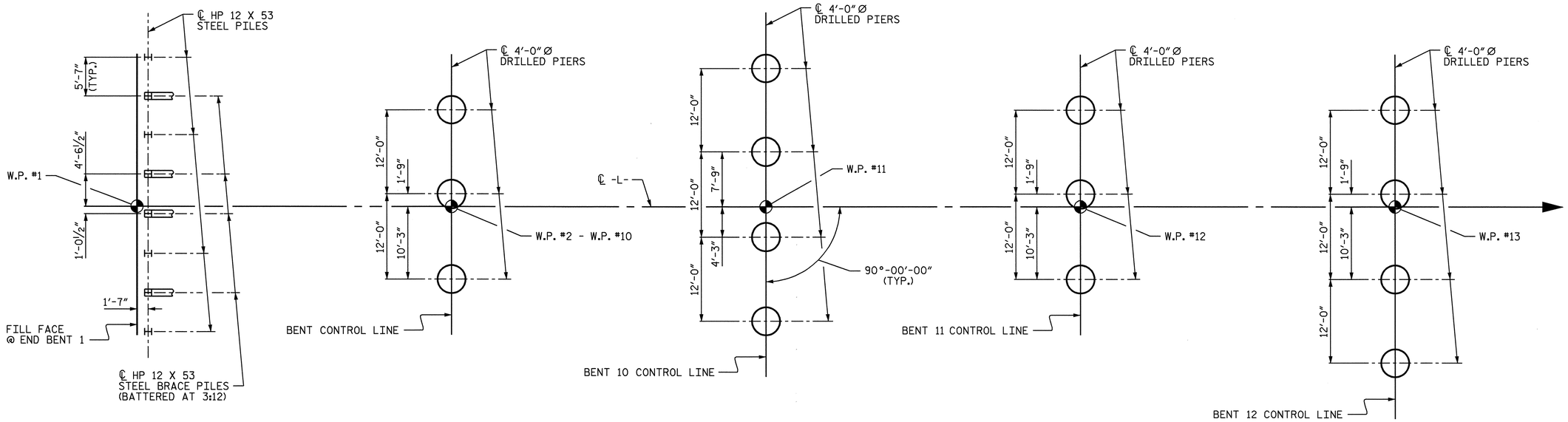

END BENT 1 | BENTS 1-9 | BENT 10 | BENT 11 | BENT 12

FOUNDATION LAYOUT

(LOCATION OF PILES AND DRILLED PIERS ARE SHOWN TO THE PILE OR DRILLED PIER CENTERLINE AT THE BOTTOM OF THE CAP.)

NOTES:

DRIVE PILES AT END BENT 1 TO A REQUIRED BEARING CAPACITY OF 150 TONS PER PILE. THE REQUIRED BEARING CAPACITY IS EQUAL TO THE ALLOWABLE BEARING CAPACITY WITH A MINIMUM FACTOR OF SAFETY OF TWO.

DRIVE PILES AT END BENT 2 TO A REQUIRED BEARING CAPACITY OF 120 TONS PER PILE. THE REQUIRED BEARING CAPACITY IS EQUAL TO THE ALLOWABLE BEARING CAPACITY WITH A MINIMUM FACTOR OF SAFETY OF TWO.

THE ALLOWABLE BEARING CAPACITY FOR PILES AT END BENT 1 IS 75 TONS PER PILE.

THE ALLOWABLE BEARING CAPACITY FOR PILES AT END BENT 2 IS 60 TONS PER PILE.

TESTING PILES WITH THE PILE DRIVING ANALYZER (PDA) DURING DRIVING, RESTRIKING OR REDRIVING MAY BE REQUIRED. THE ENGINEER WILL DETERMINE THE NEED FOR PDA TESTING. SEE PILE DRIVING ANALYZER SPECIAL PROVISION.

IT HAS BEEN ESTIMATED THAT A HAMMER WITH AN EQUIVALENT RATED ENERGY IN THE RANGE OF 33,000 FT-LBS TO 60,000 FT-LBS PER BLOW WILL BE REQUIRED TO DRIVE PILES AT END BENT 1 AND END BENT 2. THIS ESTIMATED ENERGY RANGE DOES NOT RELEASE THE CONTRACTOR FROM ARTICLE 450-5 OF THE STANDARD SPECIFICATIONS.

DRILLED PIERS AT BENT 1 THROUGH BENT 12 AND BENT 15 THROUGH BENT 18 ARE DESIGNED FOR BOTH SKIN FRICTION AND END BEARING. CHECK FIELD CONDITIONS FOR THE REQUIRED END BEARING CAPACITY OF 30 TSF.

DRILLED PIERS AT BENT 1 THROUGH BENT 3 ARE DESIGNED FOR AN APPLIED LOAD OF 285 TONS EACH AT THE TOP OF THE COLUMN.

DRILLED PIERS AT BENT 4 THROUGH BENT 6 AND BENT 15 THROUGH BENT 18 ARE DESIGNED FOR AN APPLIED LOAD OF 295 TONS EACH AT THE TOP OF COLUMN.

DRILLED PIERS AT BENT 7 THROUGH BENT 12 ARE DESIGNED FOR AN APPLIED LOAD OF 310 TONS EACH AT THE TOP OF THE COLUMN.

PERMANENT STEEL CASING IS REQUIRED FOR DRILLED PIERS AT BENT 1 THROUGH BENT 12 AND BENT 15 THROUGH BENT 18. WITHOUT PRIOR APPROVAL FROM THE ENGINEER, DO NOT EXTEND THE CASING BELOW:

ELEVATION -25 FT. FOR BENT 1 AND 2
ELEVATION -30 FT. FOR BENT 16, 17, AND 18
ELEVATION -32 FT. FOR BENT 15
ELEVATION -34 FT. FOR BENT 3, 4, 5, AND 6
ELEVATION -38 FT. FOR BENT 7, 8, 9, AND 12
ELEVATION -44 FT. FOR BENT 10 AND 11

SEE DRILLED PIERS SPECIAL PROVISION.

INSTALL PERMANENT STEEL CASING AT BENT 1 THROUGH BENT 12 AND BENT 15 THROUGH BENT 18 BY VIBRATING, SCREWING OR DRIVING THE CASING BEFORE EXCAVATING OR DISTURBING ANY MATERIAL BELOW:

ELEVATION -10 FT. FOR BENT 1, 2, 3, 16, 17, AND 18
ELEVATION -18 FT. FOR BENT 4, 5, 6, AND 15
ELEVATION -20 FT. FOR BENT 7, 8, 9, 10, 11, AND 12

PERMANENT STEEL CASINGS FOR DRILLED PIERS SHALL BE METALLIZED FROM THE TOP OF THE DRILLED PIER TO ELEVATION -3.000 USING AN 8 MIL THICK 1350 ALUMINUM (W-AI-1350) THERMAL SPRAYED COATING WITH A 0.5 MIL THICK SEAL COAT IN ACCORDANCE WITH THE THERMAL SPRAYED COATINGS (METALLIZATION) SPECIAL PROVISION AND SECTION 442 OF THE STANDARD SPECIFICATIONS. FOR THERMAL SPRAYED COATINGS (METALLIZATION), SEE SPECIAL PROVISIONS.

DRILLED PIERS AT BENT 1 THROUGH BENT 6 SHALL EXTEND TO AN ELEVATION NO HIGHER THAN -62 FT. AND SATISFY THE REQUIRED END BEARING CAPACITY.

DRILLED PIERS AT BENT 7 AND BENT 15 SHALL EXTEND TO AN ELEVATION NO HIGHER THAN -65 FT. AND SATISFY THE REQUIRED END BEARING CAPACITY.

DRILLED PIERS AT BENT 8 THROUGH BENT 12 SHALL EXTEND TO AN ELEVATION NO HIGHER THAN -68 FT. AND SATISFY THE REQUIRED END BEARING CAPACITY.

DRILLED PIERS AT BENT 16 THROUGH BENT 18 SHALL EXTEND TO AN ELEVATION NO HIGHER THAN -60 FT. AND SATISFY THE REQUIRED END BEARING CAPACITY.

THE SCOUR CRITICAL ELEVATION IS:

ELEVATION -30 FT. FOR BENT 1, 2, 3, 16, 17, AND 18
ELEVATION -35 FT. FOR BENT 4, 5, AND 6
ELEVATION -40 FT. FOR BENT 7, 8, 9, 10, 11, 12 AND 15

SCOUR CRITICAL ELEVATIONS ARE USED TO MONITOR POSSIBLE SCOUR PROBLEMS DURING THE LIFE OF THE STRUCTURE.

SLURRY CONSTRUCTION IS REQUIRED FOR DRILLED PIERS AT BENT 1 THROUGH BENT 12 AND BENT 15 THROUGH BENT 18. SEE DRILLED PIERS SPECIAL PROVISION.

SID INSPECTIONS MAY BE REQUIRED TO INSPECT THE BOTTOM CLEANLINESS OF THE DRILLED PIERS AT BENT 1 THROUGH BENT 12 AND BENT 15 THROUGH BENT 18. SEE DRILLED PIERS SPECIAL PROVISION.

CSL TUBES ARE REQUIRED AND CSL TESTING MAY BE REQUIRED FOR THE DRILLED PIERS. THE ENGINEER WILL DETERMINE THE NEED FOR CSL TESTING. SEE CROSSHOLE SONIC LOGGING SPECIAL PROVISION.

SPT TESTING MAY BE REQUIRED TO DETERMINE THE END BEARING REQUIREMENT OF THE DRILLED PIERS AT BENT 1 THROUGH BENT 12 AND BENT 15 THROUGH BENT 18. THE ENGINEER WILL DETERMINE THE NEED FOR SPT TESTING. SEE DRILLED PIERS SPECIAL PROVISION.

FOR DRILLED PIERS, SEE DRILLED PIERS SPECIAL PROVISION.

FOR MONITORING VIBRATIONS, SEE ROADWAY PLANS AND THE CONTROL OF VIBRATION SPECIAL PROVISION.

CONTINUED ON SHEET 7 OF 8.

NORTH CAROLINA PROFESSIONAL SEAL 21638 ENGINEER LAURA E. SUTTON
Laura E. Sutton
11/30/06

PROJECT NO. B-2532
CRAVEN COUNTY
STATION: 31+21.29 -L-

SHEET 5 OF 8

STATE OF NORTH CAROLINA
DEPARTMENT OF TRANSPORTATION
RALEIGH

GENERAL DRAWING
APPROACH SPANS FOR
ALFRED CUNNINGHAM BRIDGE
OVER TRENT RIVER ON
US 70 BUSINESS BETWEEN
US 70 BYPASS AND US 17

REVISIONS						SHEET NO.
NO.	BY:	DATE:	NO.	BY:	DATE:	S-5
1			3			TOTAL SHEETS
2			4			348

DRAWN BY : P.C. BREWER DATE : 8/23/06
CHECKED BY : A.S. CALLAWAY DATE : 9/12/06

30-NOV-2006 11:52
r:\Structures\pbrewer\Microstation\B2532_sd_GD_01.dgn
lsutton

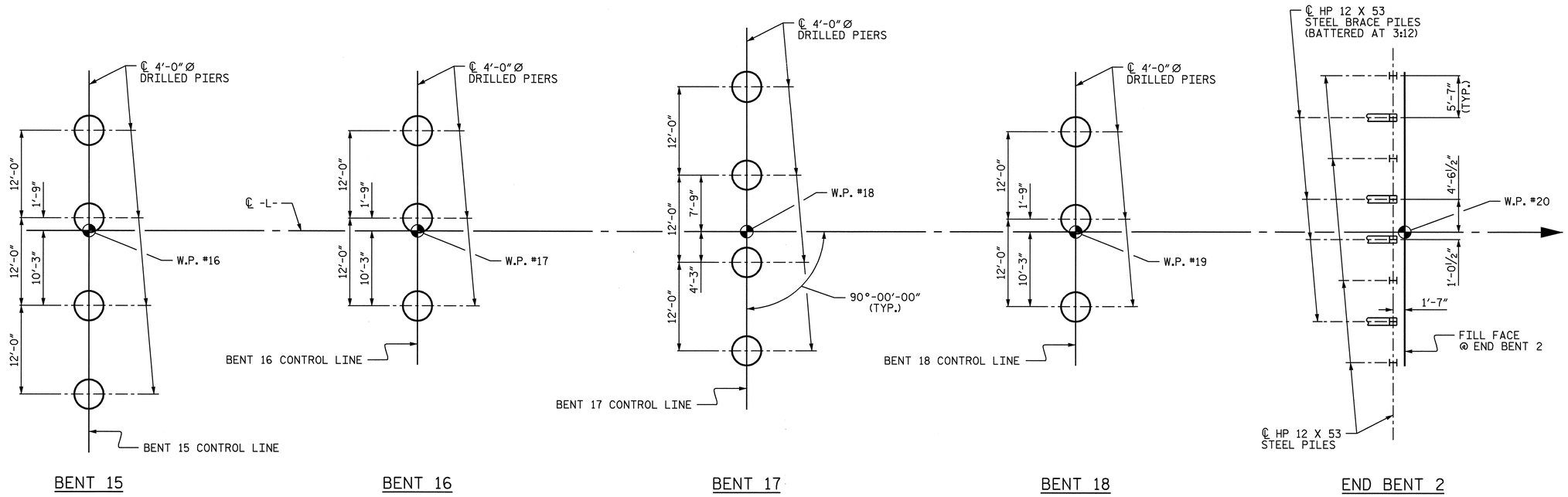

FOUNDATION LAYOUT

(LOCATION OF PILES AND DRILLED PIERS ARE SHOWN TO THE PILE OR DRILLED PIER CENTERLINE AT THE BOTTOM OF THE CAP.)

PROJECT NO. B-2532

CRAVEN COUNTY

STATION: 31+21.29 -L-

SHEET 6 OF 8

STATE OF NORTH CAROLINA
DEPARTMENT OF TRANSPORTATION
RALEIGH

GENERAL DRAWING
APPROACH SPANS FOR
ALFRED CUNNINGHAM BRIDGE
OVER TRENT RIVER ON
US 70 BUSINESS BETWEEN
US 70 BYPASS AND US 17

NORTH CAROLINA PROFESSIONAL SEAL 21638 ENGINEER LAURA E. SUTTON
11/30/06

REVISIONS						SHEET NO.
NO.	BY:	DATE:	NO.	BY:	DATE:	S-6
1			3			TOTAL SHEETS
2			4			348

DRAWN BY : P.C. BREWER DATE : 8/23/06
CHECKED BY : A.S. CALLAWAY DATE : 9/12/06

30-NOV-2006 11:52
r:\Structures\pbrewer\Microstation\B2532_sd_GD_01.dgn
lsutton

BENCH MARK: RR SPIKE IN SOUTHWEST CORNER OF PARKING AREA IN NORTHWEST QUADRANT OF FRONT ST. AND TRYON PALACE DR. INTERSECTION, EL. 5.82

HYDRAULIC DATA	
DESIGN DISCHARGE	= N/A
FREQUENCY OF DESIGN FLOOD	= 50 YRS.
DESIGN HIGH WATER ELEVATION	= 7.200
DRAINAGE AREA	= 497 SQ. MI.
BASIC DISCHARGE (Q100)	= N/A
BASIC HIGH WATER ELEVATION	= 8.000

OVERTOPPING FLOOD DATA	
OVERTOPPING DISCHARGE	= N/A
FREQUENCY OF OVERTOPPING FLOOD	= 5+ YRS.
OVERTOPPING FLOOD ELEVATION	= 4.500

NOTE: OVERTOPPING OCCURS NORTH OF THE BRIDGE CROSSING ALONG FRONT STREET.

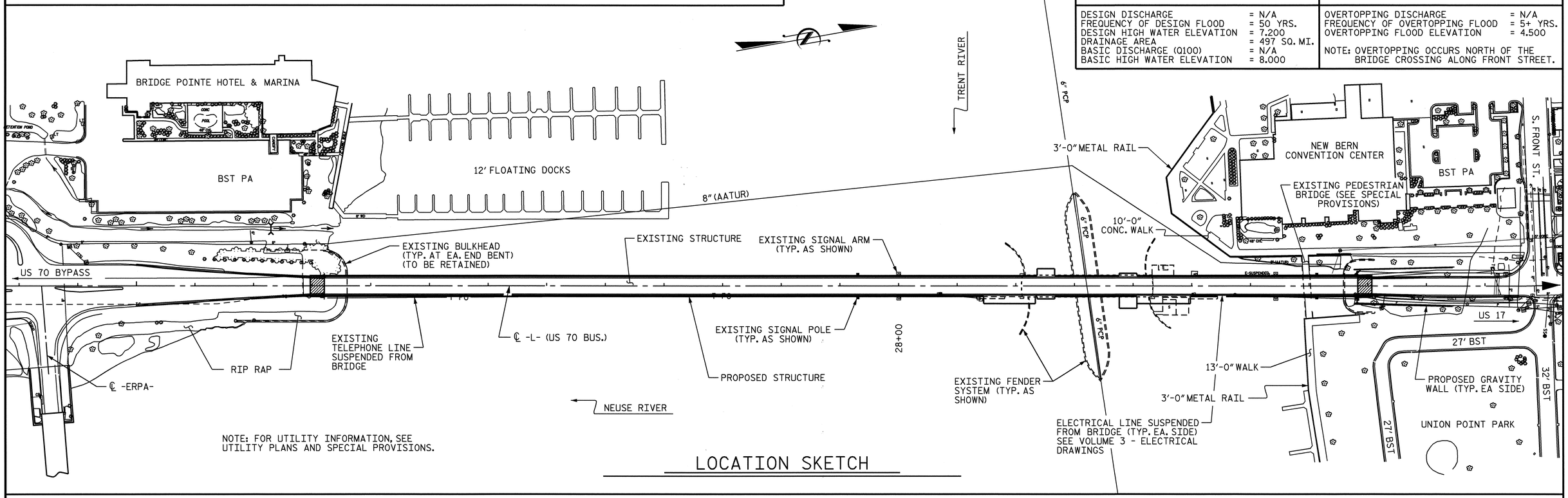

NOTE: FOR UTILITY INFORMATION, SEE UTILITY PLANS AND SPECIAL PROVISIONS.

LOCATION SKETCH

NOTES:

(CONTINUES FROM SHEET 5 OF 8)

ASSUMED LIVE LOAD = HS20 OR ALTERNATE LOADING.

FOR OTHER DESIGN DATA AND GENERAL NOTES, SEE SHEET SN.

FOR EROSION CONTROL MEASURES, SEE EROSION CONTROL PLANS.

THIS BRIDGE HAS BEEN DESIGNED BY THE STRENGTH DESIGN METHOD AS SPECIFIED IN AASHTO STANDARD SPECIFICATIONS.

THIS BRIDGE HAS BEEN DESIGNED IN ACCORDANCE WITH AASHTO'S "GUIDE SPECIFICATION AND COMMENTARY FOR VESSEL COLLISION DESIGN OF HIGHWAY BRIDGES", USING REGULAR IMPORTANCE CLASSIFICATION, METHOD I CRITERIA. TRANSVERSE AND LONGITUDINAL VESSEL FORCES ARE NOT APPLIED SIMULTANEOUSLY. VESSEL DESIGN FORCES ARE AS FOLLOWS:

BRIDGE ELEMENT	TRANSVERSE FORCE (PARALLEL TO BENT)	LONGITUDINAL FORCE (PERPENDICULAR TO BENT)	APPLIED AT ELEVATION
SUPERSTRUCTURE	100 kips	-	8.000
BENTS 1-12	134 kips	67 kips	8.000
BENTS 15-18	134 kips	67 kips	8.000

REMOVABLE FORMS MAY BE USED IN LIEU OF METAL STAY-IN-PLACE FORMS IN ACCORDANCE WITH ARTICLE 420-3 OF THE STANDARD SPECIFICATIONS.

THE EXISTING STRUCTURE, WITH A CLEAR ROADWAY WIDTH OF 28'-0", CONSISTS OF 17 SPANS OF REINFORCED CONCRETE DECK ON STEEL BEAMS AND A STEEL THROUGH TRUSS OVER THE CHANNEL AND SUBSTRUCTURE CONSISTING OF REINFORCED CONCRETE CAP AND PILES AND LOCATED AT THE SITE OF THE PROPOSED STRUCTURE SHALL BE REMOVED. THE EXISTING FENDER SYSTEM SHALL ALSO BE REMOVED. THE EXISTING BRIDGE IS PRESENTLY POSTED BELOW THE LEGAL LOAD LIMIT. SHOULD THE STRUCTURAL INTEGRITY OF THE BRIDGE FURTHER DETERIORATE, THIS LOAD LIMITATION MAY BE REDUCED AS FOUND NECESSARY DURING THE LIFE OF THE PROJECT. SEE SPECIAL PROVISIONS FOR "REMOVAL OF EXISTING STRUCTURE AT STATION 31+21.29 -L-"..

REMOVAL OF THE EXISTING BRIDGE SHALL BE PERFORMED SO AS NOT TO ALLOW DEBRIS TO FALL INTO THE WATER. THE CONTRACTOR SHALL REMOVE THE BRIDGE AND SUBMIT PLANS FOR DEMOLITION IN ACCORDANCE WITH ARTICLE 402-2 OF THE STANDARD SPECIFICATIONS.

THE MATERIAL SHOWN IN THE CROSS-HATCHED AREA SHALL BE EXCAVATED FOR A DISTANCE OF 30 FT. EACH SIDE OF CENTERLINE ROADWAY AS DIRECTED BY THE ENGINEER. THIS WORK WILL BE PAID FOR AT THE CONTRACT LUMP SUM PRICE FOR UNCLASSIFIED STRUCTURE EXCAVATION.

THE SUBSTRUCTURE OF THE EXISTING BRIDGE INDICATED ON THE PLANS IS FROM THE BEST INFORMATION AVAILABLE. SINCE THIS INFORMATION IS SHOWN FOR THE CONVENIENCE OF THE CONTRACTOR, THE CONTRACTOR SHALL HAVE NO CLAIM WHATSOEVER AGAINST THE DEPARTMENT OF TRANSPORTATION FOR ANY DELAYS OR ADDITIONAL COST INCURRED BASED ON DIFFERENCES BETWEEN THE EXISTING BRIDGE SUBSTRUCTURE SHOWN ON THE PLANS AND THE ACTUAL CONDITIONS AT THE PROJECT SITE.

THIS STRUCTURE HAS BEEN DESIGNED IN ACCORDANCE WITH HEC 18, "EVALUATING SCOUR AT BRIDGES", MAY, 2001.

THIS BRIDGE HAS BEEN DESIGNED IN ACCORDANCE WITH THE REQUIREMENTS OF THE AASHTO STANDARD SPECIFICATIONS FOR SEISMIC DESIGN OF HIGHWAY BRIDGES FOR SEISMIC PERFORMANCE CATEGORY A.

THE CONTRACTOR WILL BE REQUIRED TO CONSTRUCT, MAINTAIN, AND AFTERWARDS REMOVE A TEMPORARY ACCESS AT STATION 31+21.29 -L- FOR USE DURING CONSTRUCTION OF THE PROPOSED STRUCTURE. SEE SPECIAL PROVISIONS FOR CONSTRUCTION, MAINTENANCE, AND REMOVAL OF TEMPORARY ACCESS.

THIS STRUCTURE CONTAINS THE NECESSARY CORROSION PROTECTION REQUIRED FOR A CORROSIVE SITE.

THE CLASS AA CONCRETE IN THE BRIDGE DECK SHALL CONTAIN FLY ASH OR GROUND GRANULATED BLAST FURNACE SLAG AT THE SUBSTITUTION RATE SPECIFIED IN ARTICLE 1024-1 AND IN ACCORDANCE WITH ARTICLES 1024-5 AND 1024-6 OF THE STANDARD SPECIFICATIONS. NO PAYMENT WILL BE MADE FOR THIS SUBSTITUTION AS IT IS CONSIDERED INCIDENTAL TO THE COST OF THE REINFORCED CONCRETE DECK SLAB.

CLASS AA CONCRETE SHALL BE USED IN ALL CAST-IN-PLACE END BENT CAPS AND BENT CAPS AND SHALL CONTAIN CALCIUM NITRITE CORROSION INHIBITOR.

ALL BAR SUPPORTS USED IN THE CLASSIC CONCRETE BRIDGE RAIL, SIDEWALK, DECK, END BENT CAPS, BENT CAPS, DRILLED PIERS AND ALL INCIDENTAL REINFORCING STEEL SHALL BE EPOXY COATED IN ACCORDANCE WITH THE STANDARD SPECIFICATIONS.

NEEDLE BEAMS WILL NOT BE ALLOWED UNLESS OTHERWISE CALLED FOR ON THE PLANS OR APPROVED BY THE ENGINEER.

ALL PAVEMENT MARKING WILL BE IN ACCORDANCE WITH THE PAVEMENT MARKING PLANS AND SHALL PROVIDE FOR BICYCLES.

THE CONTRACTOR SHALL PROVIDE INDEPENDENT ASSURANCE SAMPLES OF REINFORCING STEEL AS FOLLOWS: FOR PROJECTS REQUIRING UP TO 400 TONS OF REINFORCING STEEL, ONE 30 INCH SAMPLE OF EACH SIZE BAR USED, AND FOR PROJECTS REQUIRING OVER 400 TONS OF REINFORCING STEEL, TWO 30 INCH SAMPLES OF EACH SIZE BAR USED. THE BARS FROM WHICH THE SAMPLES ARE TAKEN MUST THEN BE SPLICED WITH REPLACEMENT BARS OF THE SIZE AND LENGTH OF THE SAMPLE, PLUS A MINIMUM LAP SPLICE OF THIRTY BAR DIAMETERS.

ALL METALLIZED SURFACES SHALL RECEIVE A SEAL COATING AS SPECIFIED IN THE SPECIAL PROVISION FOR THERMAL SPRAYED COATINGS (METALLIZATION).

INASMUCH AS THE PAINT SYSTEM ON THE EXISTING STRUCTURAL STEEL CONTAINS LEAD, THE CONTRACTOR'S ATTENTION IS DIRECTED TO ARTICLE 107-1 OF THE STANDARD SPECIFICATIONS. ANY COSTS RESULTING FROM COMPLIANCE WITH APPLICABLE STATE OR FEDERAL REGULATIONS PERTAINING TO HANDLING OF MATERIALS CONTAINING LEAD BASED PAINT SHALL BE INCLUDED IN THE BID PRICE FOR "REMOVAL OF EXISTING STRUCTURE AT STATION 31+21.29 -L-".

FOR SECURING OF VESSELS, SEE SPECIAL PROVISIONS.

FOR SUBMITTAL OF WORKING DRAWINGS, SEE SPECIAL PROVISIONS.

FOR FALSEWORK AND FORMWORK, SEE SPECIAL PROVISIONS.

FOR CRANE SAFETY, SEE SPECIAL PROVISIONS.

FOR GROUT FOR STRUCTURES, SEE SPECIAL PROVISIONS.

FOR EXISTING PEDESTRIAN BRIDGE, SEE SPECIAL PROVISIONS.

NORTH CAROLINA PROFESSIONAL SEAL 21638 ENGINEER LAURA E. SUTTON
Laura E. Sutton 11/30/06

PROJECT NO. B-2532
CRAVEN COUNTY
STATION: 31+21.29 -L-

SHEET 7 OF 8

STATE OF NORTH CAROLINA
DEPARTMENT OF TRANSPORTATION
RALEIGH

GENERAL DRAWING
APPROACH SPANS FOR ALFRED CUNNINGHAM BRIDGE OVER TRENT RIVER ON US 70 BUSINESS BETWEEN US 70 BYPASS AND US 17

REVISIONS						SHEET NO.
NO.	BY:	DATE:	NO.	BY:	DATE:	S-7
1			3			TOTAL SHEETS
2			4			348

DRAWN BY : P.C. BREWER DATE : 8/23/06
CHECKED BY : A.S. CALLAWAY DATE : 9/12/06

30-NOV-2006 11:52
r:\Structures\pbrewer\Microstation\B2532_sd_GD_01.dgn
lsutton

TOTAL BILL OF MATERIAL - APPROACH SPANS ONLY

	CONSTRUCTION, MAINTENANCE, AND REMOVAL OF TEMPORARY ACCESS	REMOVAL OF EXISTING STRUCTURE	PERMANENT STEEL CASING FOR 4'-0" Ø DRILLED PIER	PDA TESTING	PDA ASSISTANCE	SID INSPECTION	SPT TESTING	CROSSHOLE SONIC LOGGING	UNCLASSIFIED STRUCTURE EXCAVATION	REINFORCED CONCRETE DECK SLAB	GROOVING BRIDGE FLOORS	CLASS AA CONCRETE	BRIDGE APPROACH SLABS	EPOXY COATED REINFORCING STEEL	EPOXY COATED SPIRAL COLUMN REINFORCING STEEL	54" PRESTRESSED CONCRETE GIRDERS		HP 12 X 53 STEEL PILES		PILE REDRIVES
	LUMP SUM	LUMP SUM	LIN. FT.	EACH	EACH	EACH	EACH	EACH	LUMP SUM	SQ. FT.	SQ. FT.	CU. YDS.	LUMP SUM	LBS.	LBS.	NO.	LIN. FT.	NO.	LIN. FT.	EACH
SUPERSTRUCTURE										58,324	41,928					76	6,499.50			
END BENT 1												23.9		3,624				8	400	8
BENT 1			86.16									26.3		27,040	5,197					
BENT 2			88.74									26.3		27,255	5,262					
BENT 3			118.10									26.3		27,470	5,327					
BENT 4			120.23									26.3		27,686	5,359					
BENT 5			122.14									26.3		27,901	5,423					
BENT 6			123.92									26.3		28,044	5,456					
BENT 7			137.70									26.3		29,048	5,746					
BENT 8			139.47									26.3		30,124	6,037					
BENT 9			141.24									26.3		30,268	6,069					
BENT 10			214.69									38.2		28,052	8,178					
BENT 11			162.80									26.3		30,626	6,166					
BENT 12			194.75									36.7		28,348	8,264					
BENT 15			169.31									36.7		27,455	7,920					
BENT 16			117.92									26.3		27,561	5,456					
BENT 17			150.89									38.2		25,502	7,145					
BENT 18			107.21									26.3		26,557	5,197					
END BENT 2												19.9		3,096				8	480	8
TOTAL	LUMP SUM	LUMP SUM	2,195.27	1	1	22	20	7	LUMP SUM	58,324	41,928	509.2	LUMP SUM	455,657	98,202	76	6,499.50	16	880	16

	RIP RAP CLASS I	FILTER FABRIC FOR DRAINAGE	ELASTOMERIC BEARINGS	EVAZOTE JOINT SEALS	CLASSIC CONCRETE BRIDGE RAIL	4'-0" Ø DRILLED PIERS
	TONS	SQ. YDS.	LUMP SUM	LUMP SUM	LIN. FT.	LIN. FT.
SUPERSTRUCTURE			LUMP SUM	LUMP SUM	3,172.86	
END BENT 1	320	355				
BENT 1						198.00
BENT 2						200.25
BENT 3						202.50
BENT 4						204.75
BENT 5						207.00
BENT 6						208.50
BENT 7						219.00
BENT 8						230.25
BENT 9						231.75
BENT 10						312.00
BENT 11						235.50
BENT 12						316.00
BENT 15						302.00
BENT 16						208.50
BENT 17						272.00
BENT 18						198.00
END BENT 2	185	205				
TOTAL	505	560	LUMP SUM	LUMP SUM	3,172.86	3,746.00

PROJECT NO. B-2532

CRAVEN COUNTY

STATION: 31+21.29 -L-

SHEET 8 OF 8

STATE OF NORTH CAROLINA
DEPARTMENT OF TRANSPORTATION
RALEIGH

GENERAL DRAWING
APPROACH SPANS FOR
ALFRED CUNNINGHAM BRIDGE
OVER TRENT RIVER ON
US 70 BUSINESS BETWEEN
US 70 BYPASS AND US 17

NORTH CAROLINA PROFESSIONAL SEAL 21638 ENGINEER LAURA E. SUTTON
11/30/06

REVISIONS						SHEET NO.
NO.	BY:	DATE:	NO.	BY:	DATE:	S-8
1			3			TOTAL SHEETS
2			4			348

DRAWN BY : P.C. BREWER DATE : 8/23/06
CHECKED BY : A.S. CALLAWAY DATE : 9/12/06

30-NOV-2006 11:52
R:\Structures\pbrewer\Microstation\B2532_sd_GD_01.dgn
lsutton

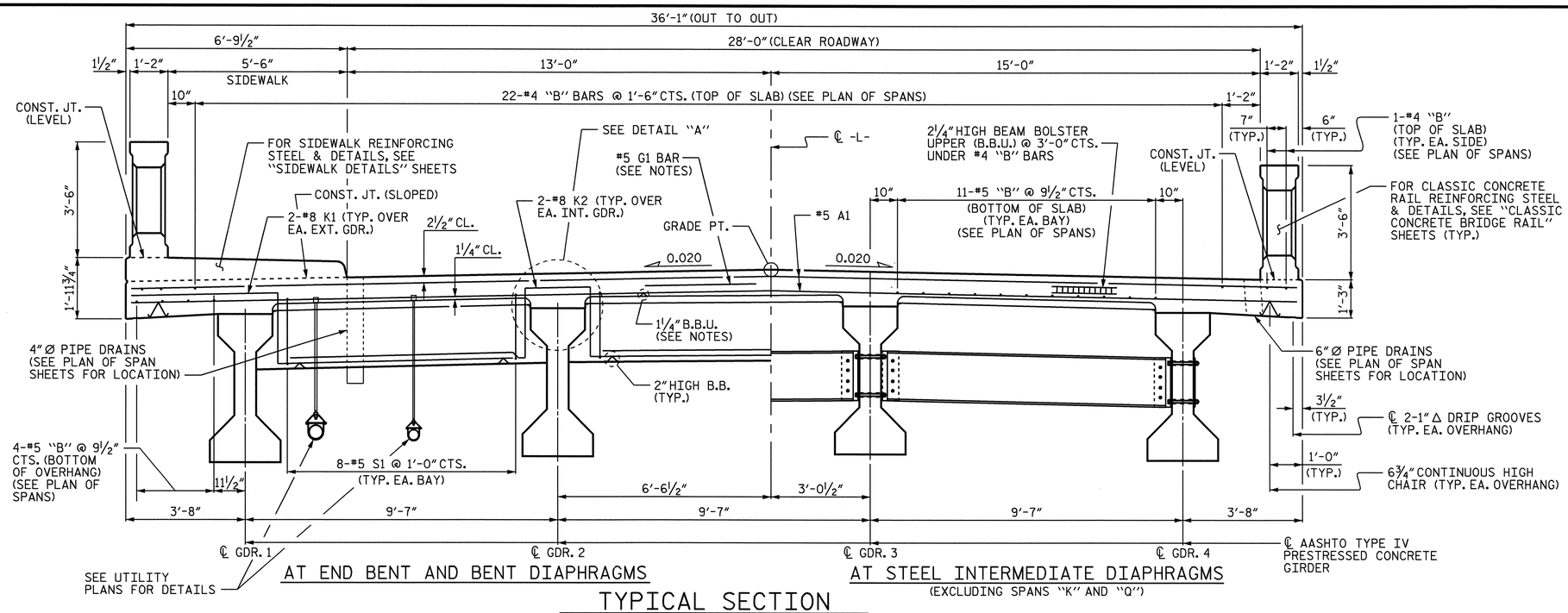

TYPICAL SECTION

(FOR SPANS "A" THROUGH "L" AND "P" THROUGH "S")
(UTILITIES IN SPANS "P" THROUGH "S" ONLY)

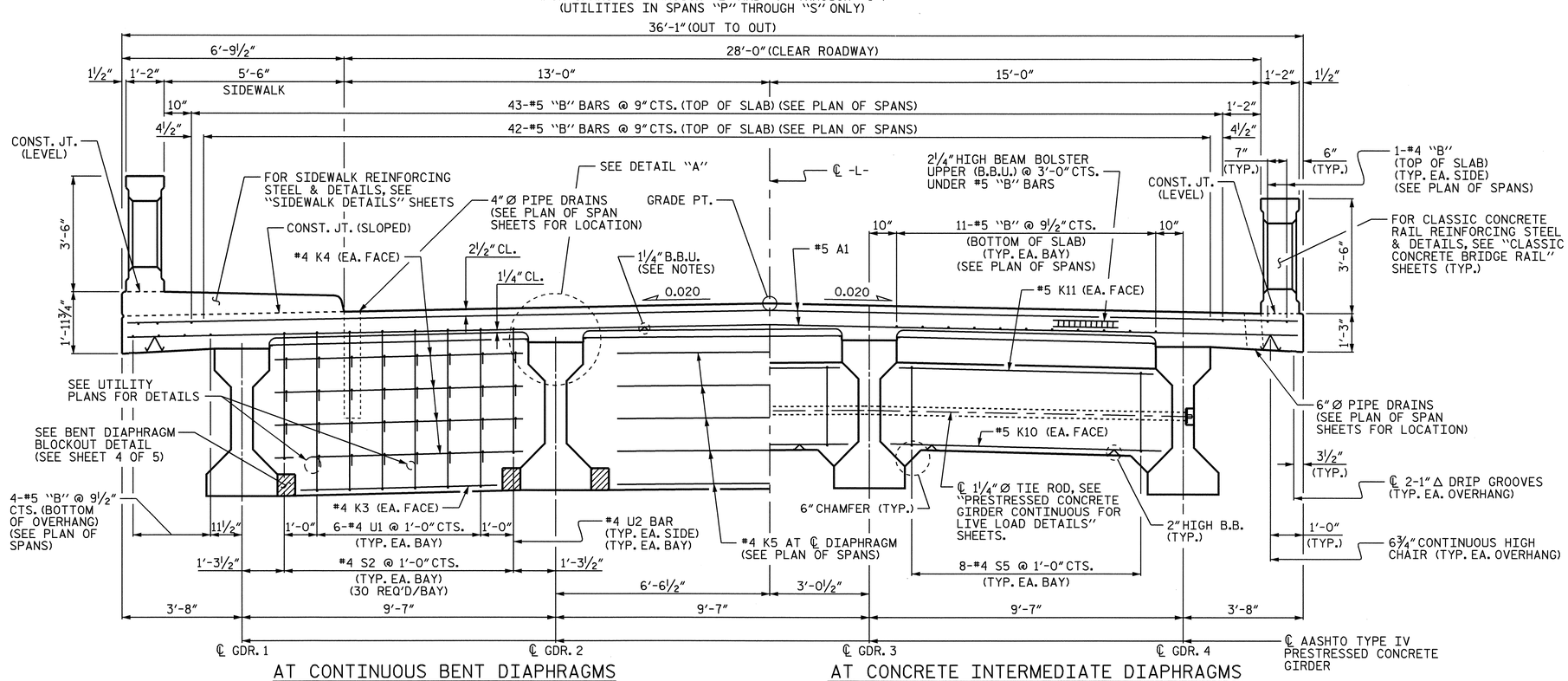

TYPICAL SECTION

(FOR SPANS "A" THROUGH "L" AND "P" THROUGH "S")
(UTILITIES IN SPANS "P" THROUGH "S" ONLY)

NOTES:

PROVIDE 1¼" HIGH BEAM BOLSTERS UPPER AT 4'-0" CTS. ATOP THE METAL STAY-IN-PLACE FORMS TO SUPPORT THE BOTTOM MAT OF "A" BARS. WHEN USING REMOVABLE FORMS, PROVIDE CONTINUOUS HIGH CHAIRS FOR METAL DECK (C.H.C.M.) @ 4'-0" CTS. WITH A HEIGHT TO SUPPORT THE BOTTOM MAT OF "A" BARS A CLEAR DISTANCE OF 2½" ABOVE THE TOP OF THE REMOVABLE FORM.

LONGITUDINAL STEEL MAY BE SHIFTED SLIGHTLY, AS NECESSARY, TO AVOID INTERFERENCE WITH STIRRUPS IN PRESTRESSED CONCRETE GIRDERS.

PREVIOUSLY CAST CONCRETE IN A CONTINUOUS UNIT SHALL HAVE ATTAINED A MINIMUM COMPRESSIVE STRENGTH OF 3,000 PSI BEFORE ADDITIONAL CONCRETE IS CAST IN THE UNIT.

CLASSIC CONCRETE BRIDGE RAIL IN A CONTINUOUS UNIT SHALL NOT BE CAST UNTIL ALL SLAB CONCRETE IN THE UNIT HAS BEEN CAST AND HAS REACHED A MINIMUM COMPRESSIVE STRENGTH OF 3,000 PSI.

#5 G1 AND G2 BARS MAY BE SHIFTED SLIGHTLY, AS NECESSARY, TO CLEAR REINFORCING STEEL AND STIRRUPS.

FOR INTERMEDIATE DIAPHRAGM DETAILS, SEE "INTERMEDIATE STEEL DIAPHRAGMS FOR TYPE IV PRESTRESSED CONCRETE GIRDERS" SHEET.

ALL REINFORCING STEEL IN CLASSIC CONCRETE BRIDGE RAIL SHALL BE EPOXY COATED.

TEMPORARY STRUTS SHALL BE PLACED BETWEEN PRESTRESSED GIRDERS ADJACENT TO THE INTERMEDIATE CONCRETE DIAPHRAGMS, AND THE NUTS ON THE 1¼" DIA. TIE RODS SHALL BE FULLY TIGHTENED BEFORE THE DIAPHRAGMS ARE CAST. STRUTS SHALL REMAIN IN PLACE 3 DAYS AFTER CONCRETE IS PLACED. THE TIE RODS SHALL BE RE-TIGHTENED AFTER THE STRUTS HAVE BEEN REMOVED.

CENTER UTILITY IN BLOCKOUT AND FILL ANNULAR SPACE AROUND UTILITY PIPE WITH JOINT FILLER IN ACCORDANCE WITH STANDARD SPECIFICATION ARTICLE 1028-1. SEE UTILITY PLANS FOR DETAILS.

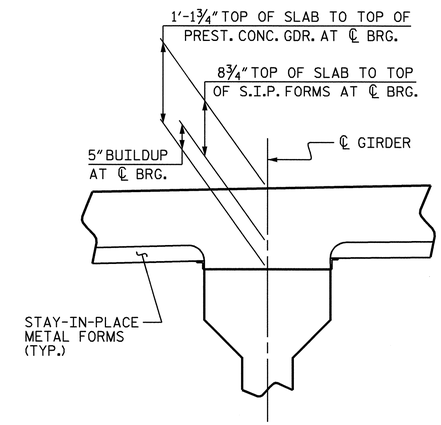

DETAIL "A"

(TYP. EA. GIRDER)

PROJECT NO. B-2532

CRAVEN COUNTY

STATION: 31+21.29 -L-

SHEET 1 OF 5

STATE OF NORTH CAROLINA
DEPARTMENT OF TRANSPORTATION
RALEIGH

SUPERSTRUCTURE

TYPICAL SECTIONS

NORTH CAROLINA PROFESSIONAL SEAL 21638 ENGINEER LAURA E. SUTTON
11/30/06

REVISIONS						SHEET NO.
NO.	BY:	DATE:	NO.	BY:	DATE:	8-9
1			3			TOTAL SHEETS
2			4			348

DRAWN BY : P.C. BREWER DATE : 7/26/06
CHECKED BY : A.S. CALLAWAY DATE : 9/18/06

30-NOV-2006 11:52
r:\Structures\pbrewer\Microstation\B2532_sd_TS_01.dgn
lsutton

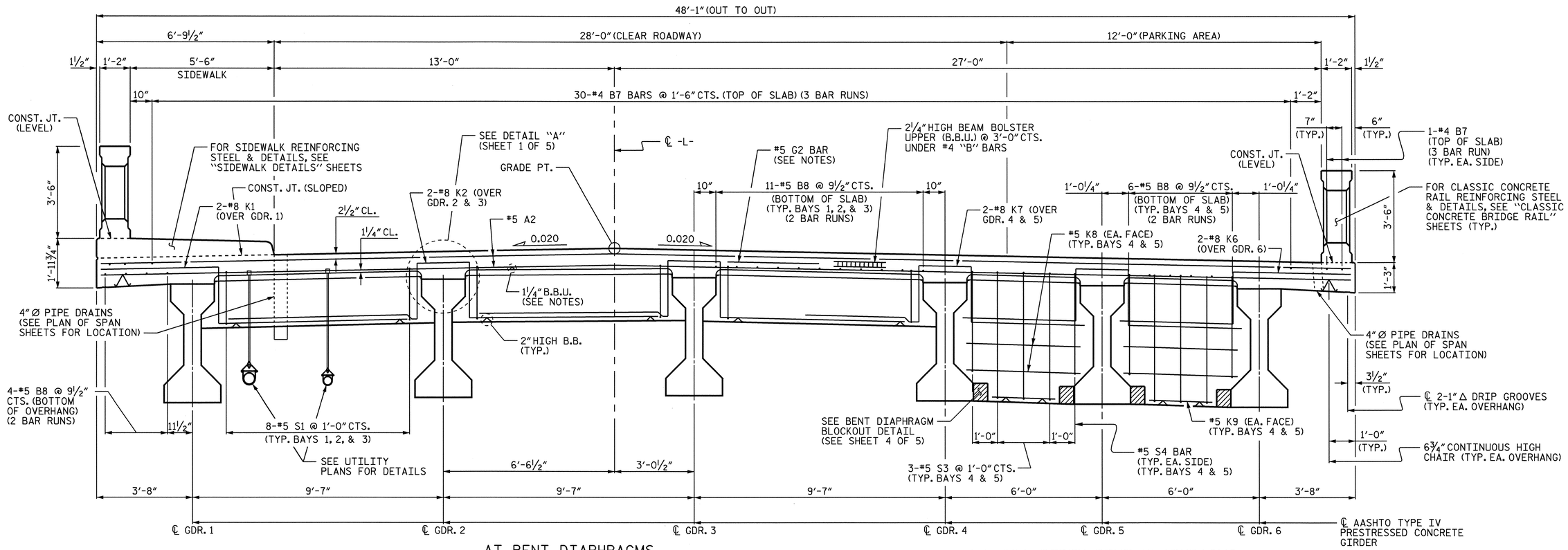

AT BENT DIAPHRAGMS

AT FULL-DEPTH BENT DIAPHRAGMS

TYPICAL SECTION

(FOR SPANS "M" & "O")
(UTILITIES IN SPAN "O" ONLY)

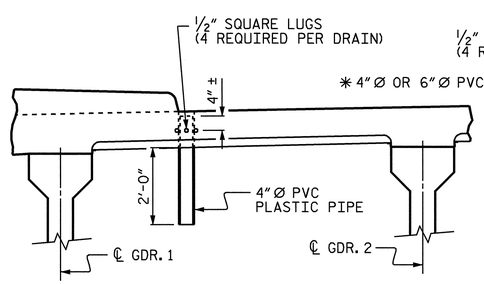

LEFT SIDE ELEVATION
(169-4" Ø DRAINS REQ'D)

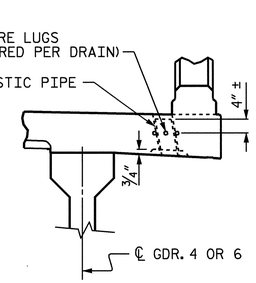

RIGHT SIDE ELEVATION
(84-6" Ø DRAINS REQ'D)
(14-4" Ø DRAINS REQ'D)

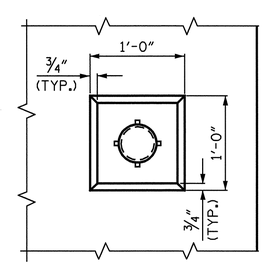

PLAN OF RECESS

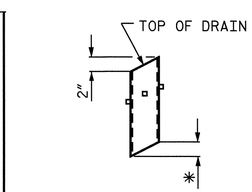

* TO BE SET TO MATCH SLOPE OF BOTTOM OF OVERHANG

PIPE DETAIL

TOP OF FLOOR DRAINS TO BE SET ⅜" BELOW SURFACE OF SLAB.

4-½" SQUARE LUGS TO BE GLUED TO THE PVC PLASTIC PIPE AT EQUAL SPACES AROUND THE PIPE DRAIN APPROXIMATELY 4" FROM THE TOP OF THE PIPE.

THE 4" Ø AND 6" Ø PVC PLASTIC PIPE AND FITTINGS SHALL BE SCHEDULE 40 AND CONFORM TO ASTM D1785.

DRAIN DETAILS

(SEE PLAN OF SPANS FOR LOCATION)
* NOTE: 4" Ø DRAINS, ON RIGHT SIDE, IN SPANS "M" AND "O" ONLY.

PROJECT NO. B-2532
CRAVEN COUNTY
STATION: 31+21.29 -L-

SHEET 2 OF 5

STATE OF NORTH CAROLINA
DEPARTMENT OF TRANSPORTATION
RALEIGH

SUPERSTRUCTURE

TYPICAL SECTIONS

NORTH CAROLINA PROFESSIONAL SEAL 21638 ENGINEER LAURA E. SUTTON
11/30/06

REVISIONS						SHEET NO.
NO.	BY:	DATE:	NO.	BY:	DATE:	S-10
1			3			TOTAL SHEETS
2			4			348

DRAWN BY : P.C. BREWER DATE : 7/26/06
CHECKED BY : A.S. CALLAWAY DATE : 9/18/06

30-NOV-2006 11:52
r:\Structures\pbrewer\Microstation\B2532_sd_TS_01.dgn
lsutton

NOTE:
FOR LOCATION OF SECTIONS, SEE "PLAN OF SPAN" SHEETS.

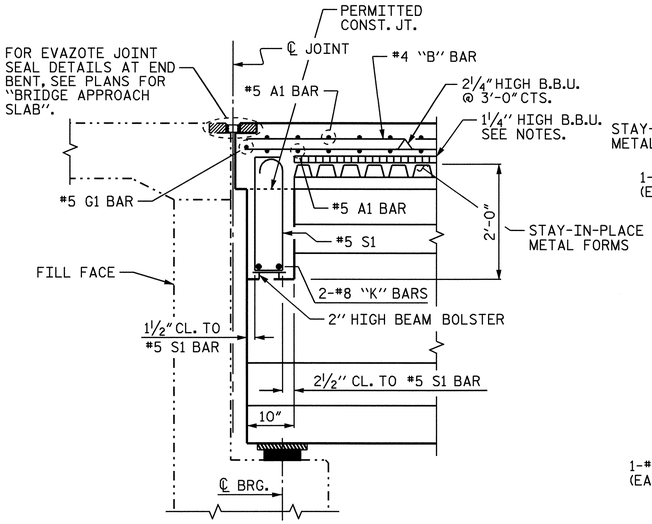

SECTION A-A

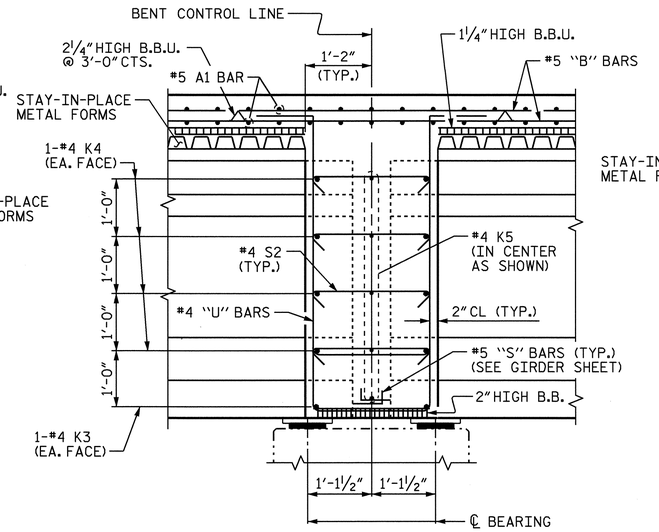

SECTION B-B

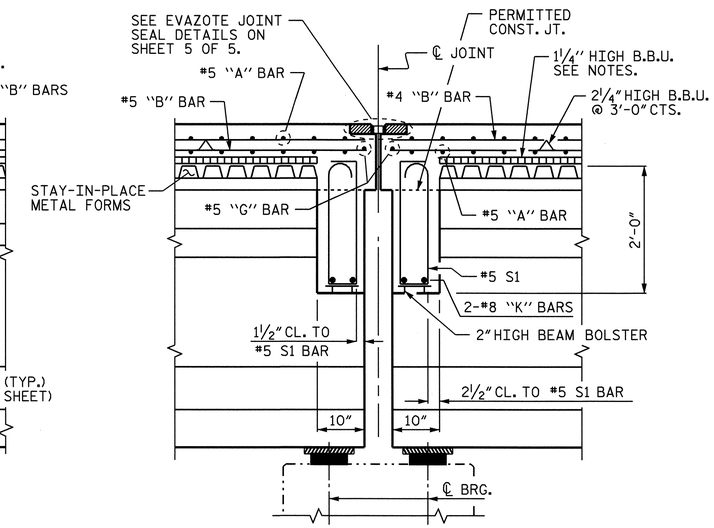

SECTION C-C

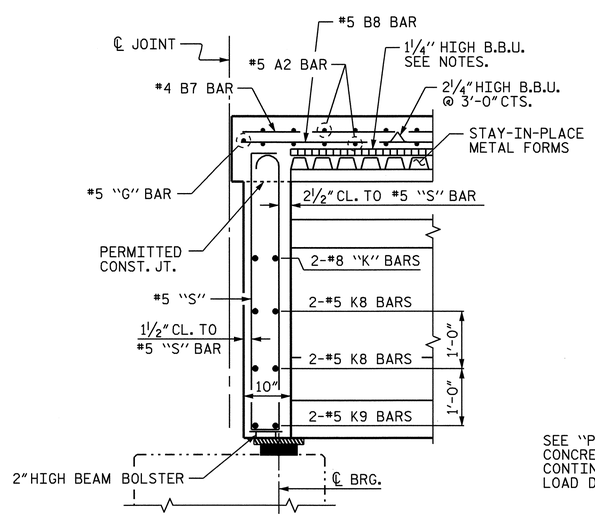

SECTION D-D

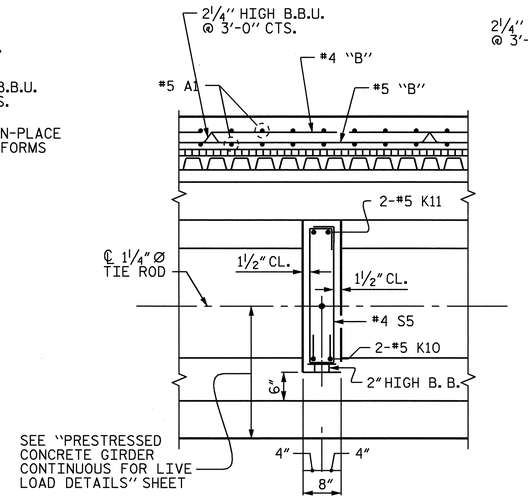

SECTION E-E

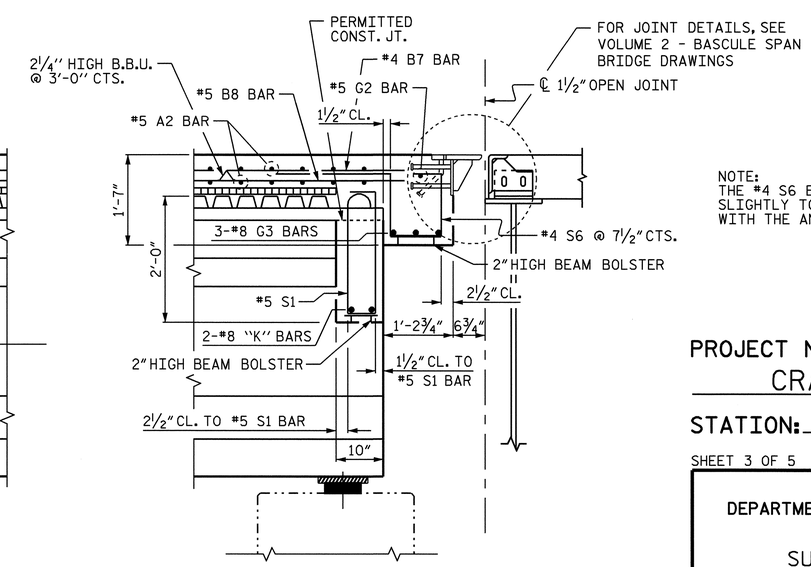

SECTION F-F

NOTE:
THE #4 S6 BARS MAY BE SHIFTED SLIGHTLY TO AVOID INTERFERENCE WITH THE ANCHOR STUDS.

PROJECT NO. B-2532
CRAVEN COUNTY
STATION: 31+21.29 -L-

SHEET 3 OF 5

STATE OF NORTH CAROLINA
DEPARTMENT OF TRANSPORTATION
RALEIGH

SUPERSTRUCTURE

TYPICAL SECTIONS

NORTH CAROLINA PROFESSIONAL SEAL 21638 ENGINEER LAURA E. SUTTON
11/30/06

REVISIONS						SHEET NO.
NO.	BY:	DATE:	NO.	BY:	DATE:	S-11
1			3			TOTAL SHEETS
2			4			348

DRAWN BY : P.C. BREWER DATE : 7/26/06
CHECKED BY : A.S. CALLAWAY DATE : 9/18/06

30-NOV-2006 11:52
r:\Structures\pbrewer\Microstation\B2532_sd_TS_01.dgn
lsutton

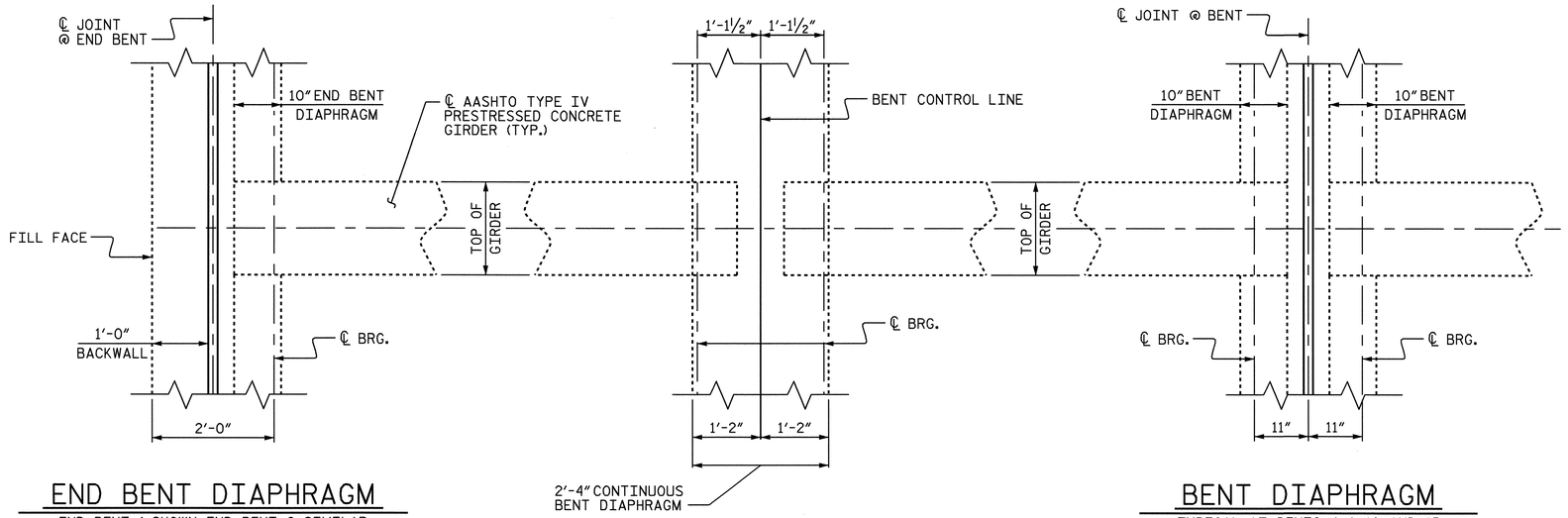

END BENT DIAPHRAGM

END BENT 1 SHOWN, END BENT 2 SIMILAR

CONTINUOUS BENT DIAPHRAGM

TYPICAL AT BENTS 1, 2, 3, 5, 6, 7, 9, 10, 11, 16, 17, AND 18

BENT DIAPHRAGM

TYPICAL AT BENTS 4, 8, 12, AND 15

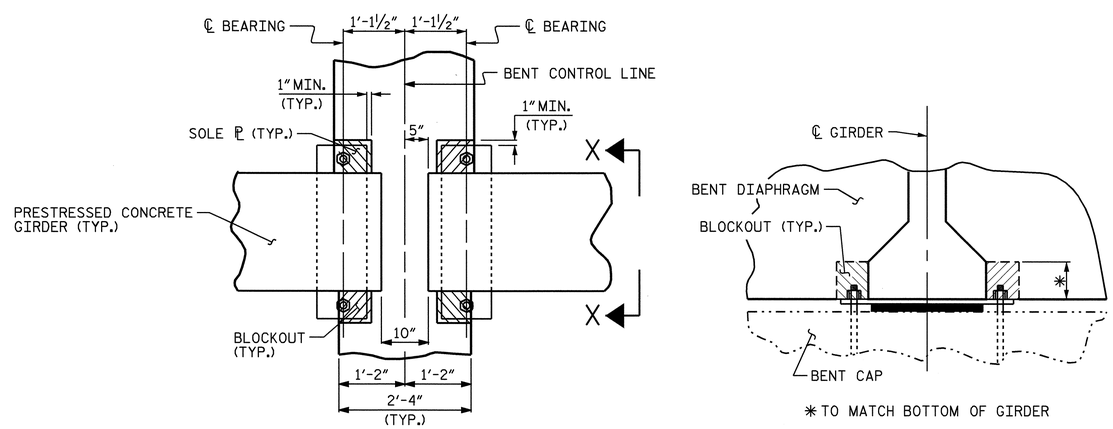

PLAN

SECTION X-X

BENT DIAPHRAGM BLOCKOUT DETAIL

(CONTINUOUS BENT DIAPHRAGM SHOWN, FULL-DEPTH DIAPHRAGM SIMILAR)

PROJECT NO. B-2532

CRAVEN COUNTY

STATION: 31+21.29 -L-

SHEET 4 OF 5

STATE OF NORTH CAROLINA
DEPARTMENT OF TRANSPORTATION
RALEIGH

SUPERSTRUCTURE

TYPICAL SECTIONS

NORTH CAROLINA PROFESSIONAL SEAL 21638 ENGINEER LAURA E. SUTTON
11/30/06

REVISIONS						SHEET NO.
NO.	BY:	DATE:	NO.	BY:	DATE:	S-12
1			3			TOTAL SHEETS
2			4			348

DRAWN BY : P.C. BREWER DATE : 7/26/06
CHECKED BY : A.S. CALLAWAY DATE : 9/18/06

30-NOV-2006 11:52
r:\Structures\pbrewer\Microstation\B2532_sd_TS_01.dgn
lsutton

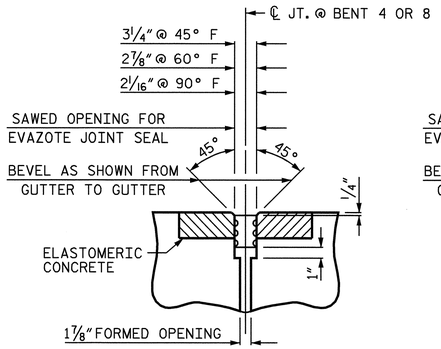

SECTION E-E
EVAZOTE JOINT SEAL

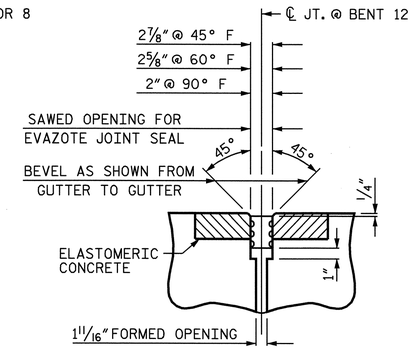

SECTION E-E
EVAZOTE JOINT SEAL

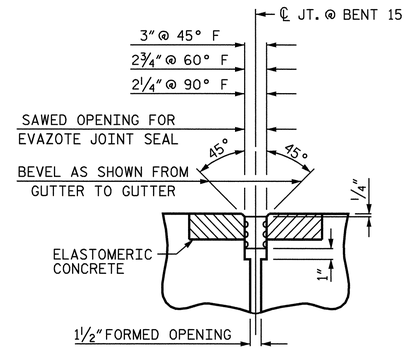

SECTION E-E
EVAZOTE JOINT SEAL

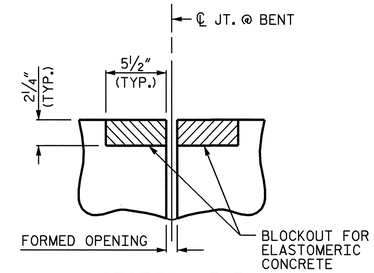

SECTION E-E
EVAZOTE JOINT SEAL
(PRE-SAWED ELASTOMERIC CONCRETE DIMENSIONS)

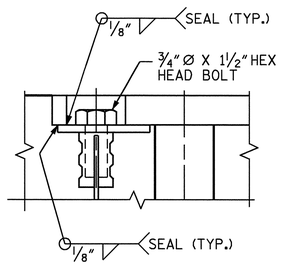

DETAIL "B"

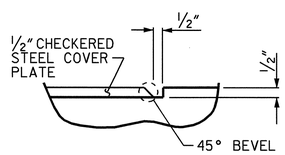

DETAIL "C"

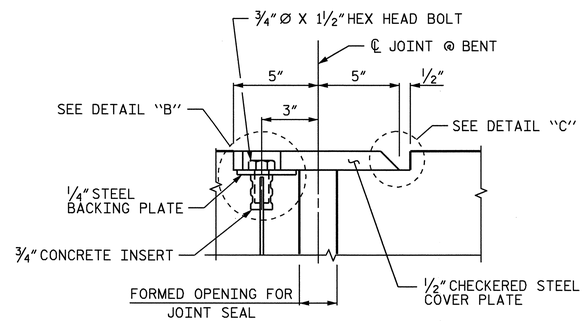

SECTION C-C

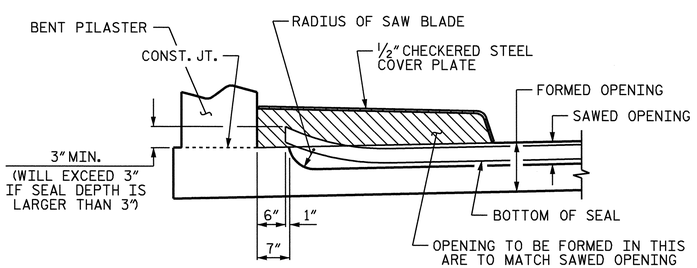

SECTION D-D

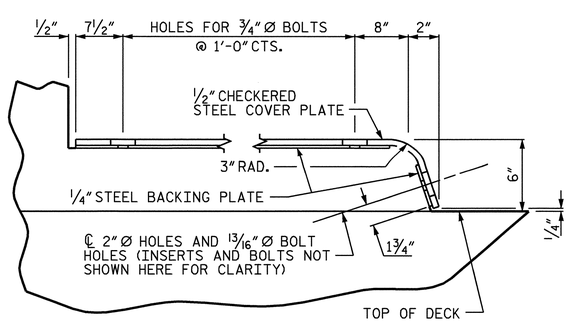

SECTION D-D

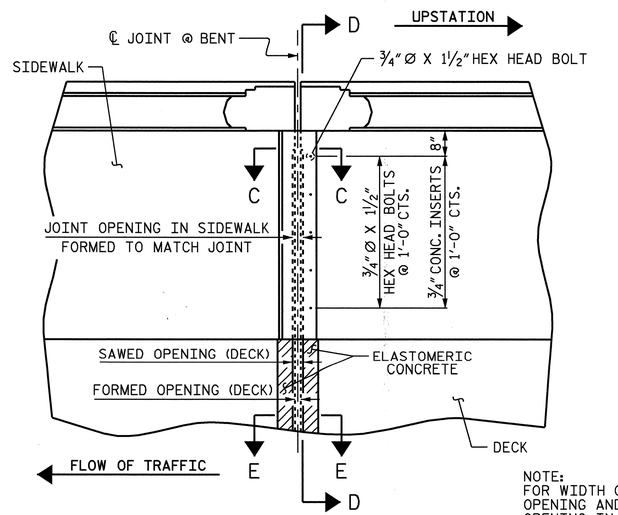

PLAN OF LEFT SIDE

NOTE:
FOR WIDTH OF SAWED OPENING AND FORMED OPENING IN DECK, SEE SECTION E-E.

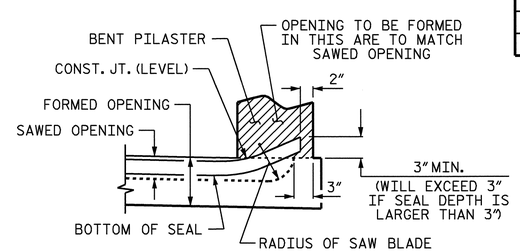

SECTION F-F

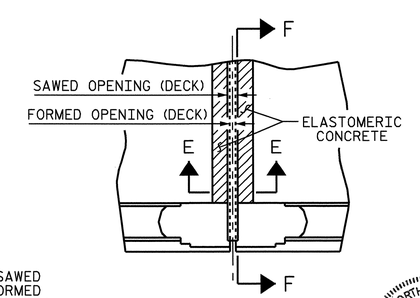

PLAN OF RIGHT SIDE

NOTES:

THE STEEL PLATES SHALL CONFORM TO AASHTO M270 GRADE 36 OR APPROVED EQUAL. AFTER FABRICATION, THE PLATES SHALL BE COMMERCIALLY BLAST CLEANED AND COATED WITH A MINIMUM THICKNESS OF 4 MILS (DRY) OF ZINC RICH PAINT IN ACCORDANCE WITH THE STANDARD SPECIFICATIONS. AT THE CONTRACTORS OPTION, THESE SURFACES MAY BE METALLIZED TO A MINIMUM THICKNESS OF 6 MILS. SEE SPECIAL PROVISIONS FOR THERMAL SPRAYED COATINGS (METALLIZATION).

THE ¾" DIAMETER HEX HEAD BOLTS SHALL CONFORM TO ASTM F593 ALLOY 304 STAINLESS STEEL.

THE ¾" CONCRETE INSERTS SHALL BE CLOSED-END FERRULES WITH LOOPED WIRE STRUTS ATTACHED TO THEM. THE INSERTS SHALL CONFORM TO AASHTO M169, GRADE 12L14 AND SHALL HAVE A TENSILE WORKING LOAD CAPACITY OF 3000 LBS.

NO SEPARATE PAYMENT WILL BE MADE FOR FURNISHING AND INSTALLING THE COVER PLATE. THE ENTIRE COST OF THIS WORK SHALL BE INCLUDED IN THE LUMP SUM PRICE FOR "EVAZOTE JOINT SEALS".

THE JOINT IN THE DECK SHALL BE SAWED PRIOR TO THE CASTING OF THE SIDEWALK AND CLASSIC CONCRETE BRIDGE RAIL.

DURING THE JOINT INSTALLATION PROCEDURE, THE JOINT AND SURROUNDING AREA SHALL BE KEPT CLEAN AND FREE OF DEBRIS.

THE NOMINAL UNCOMPRESSED SEAL WIDTH OF THE EVAZOTE JOINT SEAL SHALL BE 4" AT BENT 4 AND BENT 8 AND 3½" AT BENT 12 AND BENT 15. FOR EVAZOTE JOINT SEALS, SEE SPECIAL PROVISIONS.

FOR ELASTOMERIC CONCRETE, SEE SPECIAL PROVISIONS.

ELASTOMERIC CONCRETE	
BENT	ELASTOMERIC CONCRETE * (CU. FT.)
4	4.8
8	4.8
12	4.8
15	4.8
TOTAL	19.2

* BASED ON THE MINIMUM BLOCKOUT SHOWN.

PROJECT NO. B-2532
CRAVEN COUNTY
STATION: 31+21.29 -L-

SHEET 5 OF 5

STATE OF NORTH CAROLINA
DEPARTMENT OF TRANSPORTATION
RALEIGH

SUPERSTRUCTURE
TYPICAL SECTIONS

NORTH CAROLINA PROFESSIONAL SEAL 21638 ENGINEER LAURA E. SUTTON
11/30/06

REVISIONS						SHEET NO.
NO.	BY:	DATE:	NO.	BY:	DATE:	S-13
1			3			TOTAL SHEETS
2			4			348

JOINT SEAL DETAILS AT BENT

DRAWN BY : P.C. BREWER DATE : 7/26/06
CHECKED BY : A.S. CALLAWAY DATE : 9/18/06

24-OCT-2006 14:59
r:\Structures\pbrewer\Microstation\B2532_sd_TS_01.dgn
LSUTTON

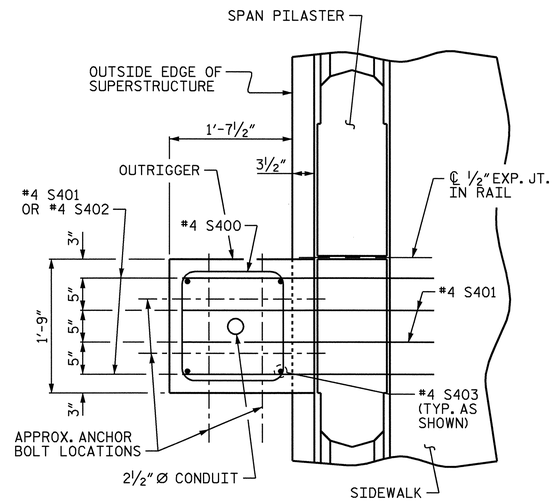

PLAN

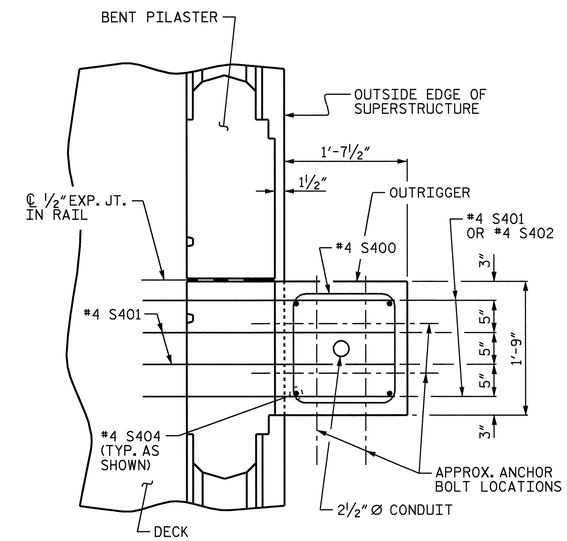

PLAN

FOR LOCATION OF LIGHTING OUTRIGGERS, SEE "PLAN OF SPANS".

BAR TYPES

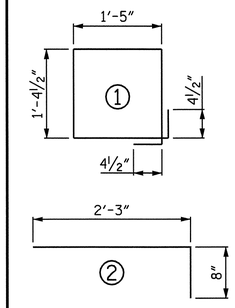

ALL BAR DIMENSIONS ARE OUT TO OUT.

BILL OF MATERIAL FOR ONE OUTRIGGER

LEFT SIDE (18 REQ'D)

BAR	NO.	SIZE	TYPE	LENGTH	WEIGHT
✱S400	7	4	1	6'-4"	30
✱S401	10	4	2	2'-11"	19
✱S402	6	4	STR	3'-7"	14
✱S403	4	4	STR	5'-1"	14
✱EPOXY COATED REINFORCING STEEL					77 LBS.
CLASS AA CONCRETE					0.6 CU. YDS.

RIGHT SIDE (8 REQ'D)

BAR	NO.	SIZE	TYPE	LENGTH	WEIGHT
✱S400	6	4	1	6'-4"	25
✱S401	10	4	2	2'-11"	19
✱S402	4	4	STR	3'-7"	10
✱S404	4	4	STR	4'-7"	12
✱EPOXY COATED REINFORCING STEEL					66 LBS.
CLASS AA CONCRETE					0.5 CU. YDS.

NOTES:

SEE VOLUME 3 - ELECTRICAL DRAWINGS FOR LIGHTING DETAILS, INCLUDING ANCHOR BOLT PATTERNS, MOUNTING HARDWARE, AND CONDUIT INSTALLATION.

PAYMENT FOR THE ENTIRE COST OF THE LIGHTING OUTRIGGERS SHALL BE CONSIDERED INCIDENTAL TO THE SQUARE FOOT PRICE BID FOR "REINFORCED CONCRETE DECK SLAB".

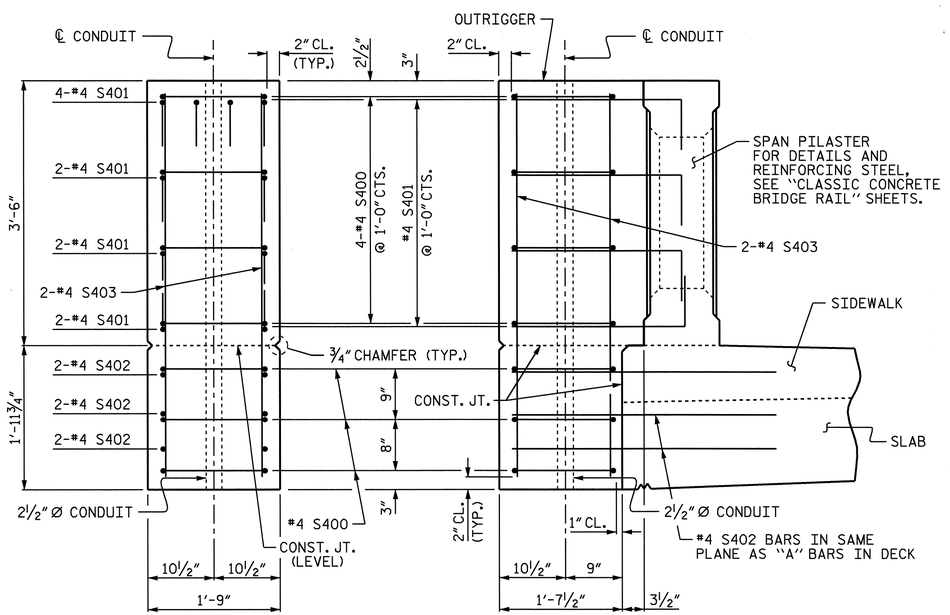

END VIEW ELEVATION

LEFT SIDE OUTRIGGER DETAILS

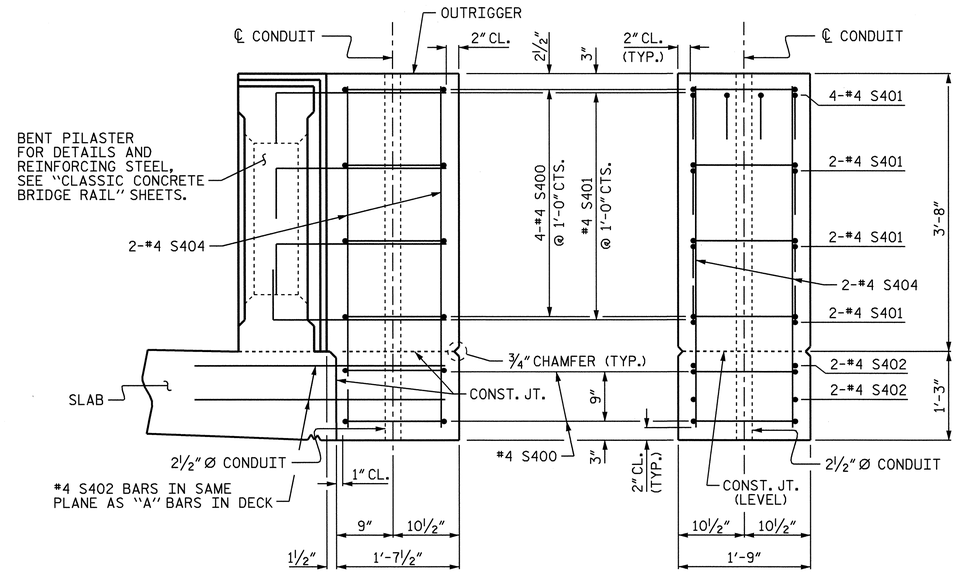

ELEVATION END VIEW

RIGHT SIDE OUTRIGGER DETAILS

PROJECT NO. B-2532

CRAVEN COUNTY

STATION: 31+21.29 -L-

STATE OF NORTH CAROLINA
DEPARTMENT OF TRANSPORTATION
RALEIGH

SUPERSTRUCTURE

LIGHTING OUTRIGGER

NORTH CAROLINA PROFESSIONAL SEAL 21638 ENGINEER LAURA E. SUTTON
11/30/06

REVISIONS								SHEET NO.
NO.	BY:	DATE:	NO.	BY:	DATE:			S-14
1			3					TOTAL SHEETS
2			4					348

DRAWN BY : P.C. BREWER DATE : 7/26/06
CHECKED BY : A.S. CALLAWAY DATE : 9/19/06

30-NOV-2006 11:51
r:\Structures\pbrewer\Microstation\B2532_sd_OR_01.dgn
lsutton

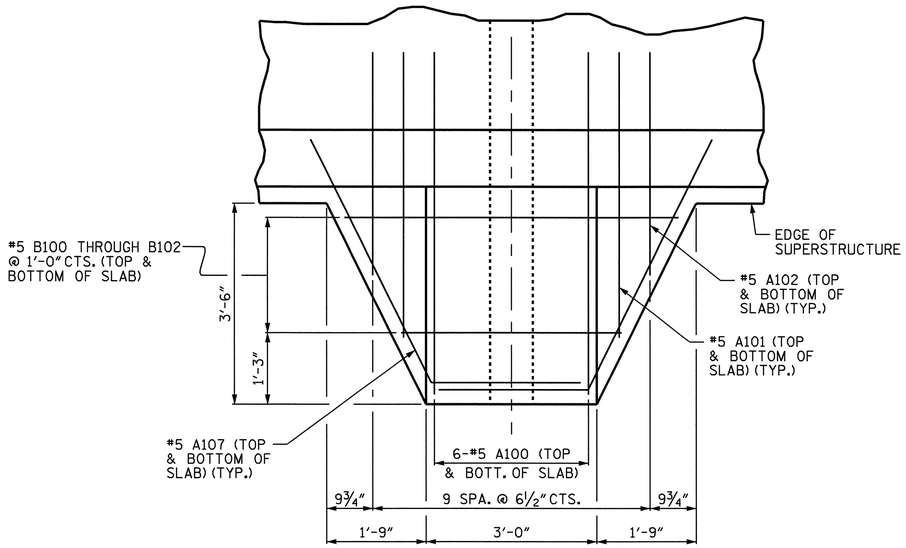

PLAN OF GATE OUTRIGGER

FOR LOCATION OF TRAFFIC GATE OUTRIGGERS, SEE "PLAN OF SPANS".

BAR TYPES

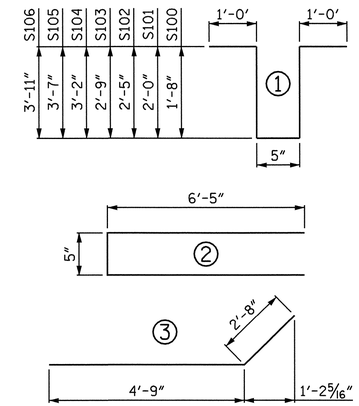

ALL BAR DIMENSIONS ARE OUT TO OUT.

BILL OF MATERIAL

FOR ONE OUTRIGGER (8 REQ'D)

BAR	NO.	SIZE	TYPE	LENGTH	WEIGHT
* A100	14	5	STR	6'-0"	88
* A101	4	5	STR	5'-0"	21
* A102	4	5	STR	3'-11"	16
* A103	2	5	STR	5'-8"	12
* A104	2	5	STR	3'-11"	8
* A105	2	5	STR	2'-2"	5
* A106	1	5	2	13'-3"	14
* A107	4	5	3	7'-5"	31
* B100	2	5	STR	5'-10"	12
* B101	2	5	STR	4'-10"	10
* B102	2	5	STR	3'-10"	8
* S100	1	5	1	5'-9"	6
* S101	1	5	1	6'-5"	7
* S102	1	5	1	7'-3"	8
* S103	1	5	1	7'-11"	8
* S104	1	5	1	8'-9"	9
* S105	1	5	1	9'-7"	10
* S106	1	5	1	10'-3"	11
* EPOXY COATED REINFORCING STEEL					284 LBS.
CLASS AA CONCRETE					1.2 CU. YDS.

NOTES:

SEE VOLUME 3 - ELECTRICAL DRAWINGS FOR WARNING GATE AND BARRIER/RESISTANCE GATE DETAILS, INCLUDING ANCHOR BOLT PATTERNS, MOUNTING HARDWARE, SLEEVE LOCATION, AND CONDUIT LOCATION AND INSTALLATION.

THE CONTRACTOR IS RESPONSIBLE FOR ENSURING THAT THE OUTRIGGER IS OF SUFFICIENT SIZE TO ACCOMMODATE BOTH THE WARNING GATE AND BARRIER/RESISTANCE GATE. ANY MODIFICATIONS OF THE OUTRIGGERS SHALL BE SUBMITTED TO THE ENGINEER FOR APPROVAL PRIOR TO CONSTRUCTION OF THE DECK SLAB.

THE HEIGHT OF THE LEVELING PAD, IF REQUIRED, SHALL BE ADJUSTED AS NECESSARY TO MEET THE MANUFACTURERS RECOMMENDED HEIGHT REQUIREMENTS FOR THE WARNING GATE AND RESISTANCE BARRIER. IF THE HEIGHT OF THE LEVELING PAD EXCEEDS 3 INCHES, THE CONTRACTOR SHALL SUBMIT REINFORCING STEEL DETAILS TO THE ENGINEER FOR APPROVAL PRIOR TO INSTALLATION OF THE GATES.

PAYMENT FOR THE ENTIRE COST OF THE TRAFFIC GATE OUTRIGGERS SHALL BE CONSIDERED INCIDENTAL TO THE SQUARE FOOT PRICE BID FOR "REINFORCED CONCRETE DECK SLAB".

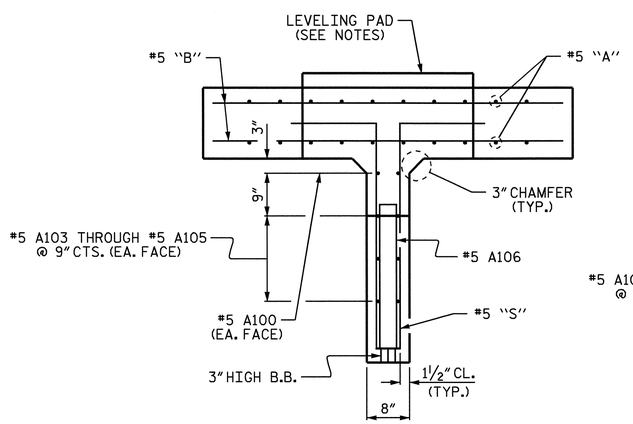

SECTION A-A

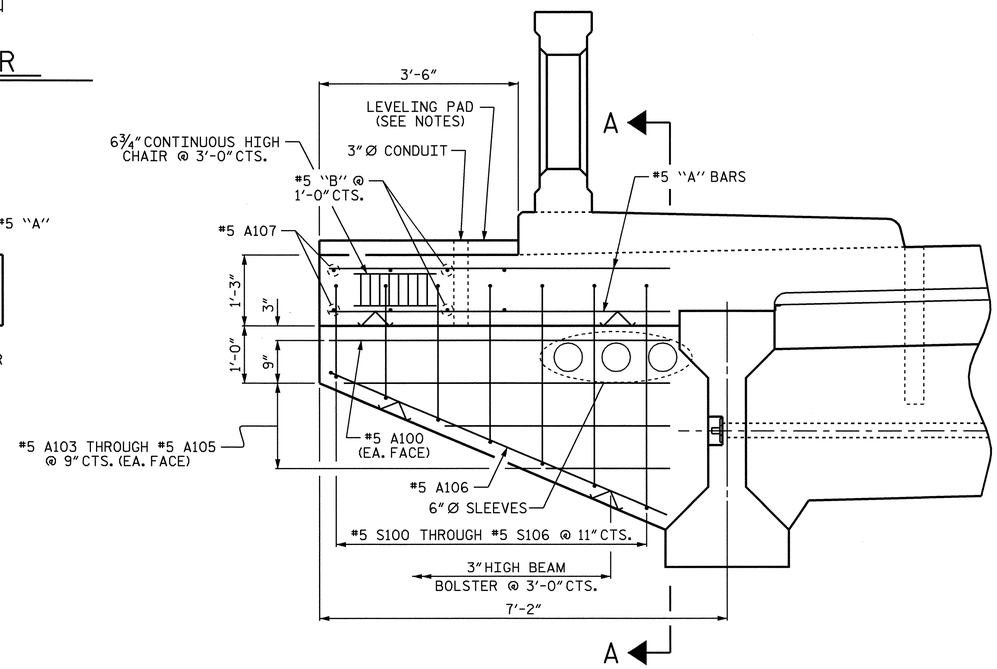

ELEVATION OF GATE OUTRIGGER

(LEFT SIDE SHOWN, RIGHT SIDE SIMILAR EXCEPT OMIT SIDEWALK)

PROJECT NO. B-2532

CRAVEN COUNTY

STATION: 31+21.29 -L-

STATE OF NORTH CAROLINA
DEPARTMENT OF TRANSPORTATION
RALEIGH

SUPERSTRUCTURE

TRAFFIC GATE OUTRIGGER

NORTH CAROLINA PROFESSIONAL SEAL 21638 ENGINEER LAURA E. SUTTON
11/30/06

REVISIONS						SHEET NO.
NO.	BY:	DATE:	NO.	BY:	DATE:	S-15
1			3			TOTAL SHEETS
2			4			348

DRAWN BY : P.C. BREWER DATE : 7/26/06
CHECKED BY : A.S. CALLAWAY DATE : 9/19/06

30-NOV-2006 11:51
r:\Structures\pbrewer\Microstation\B2532_sd_OR_01.dgn
lsutton

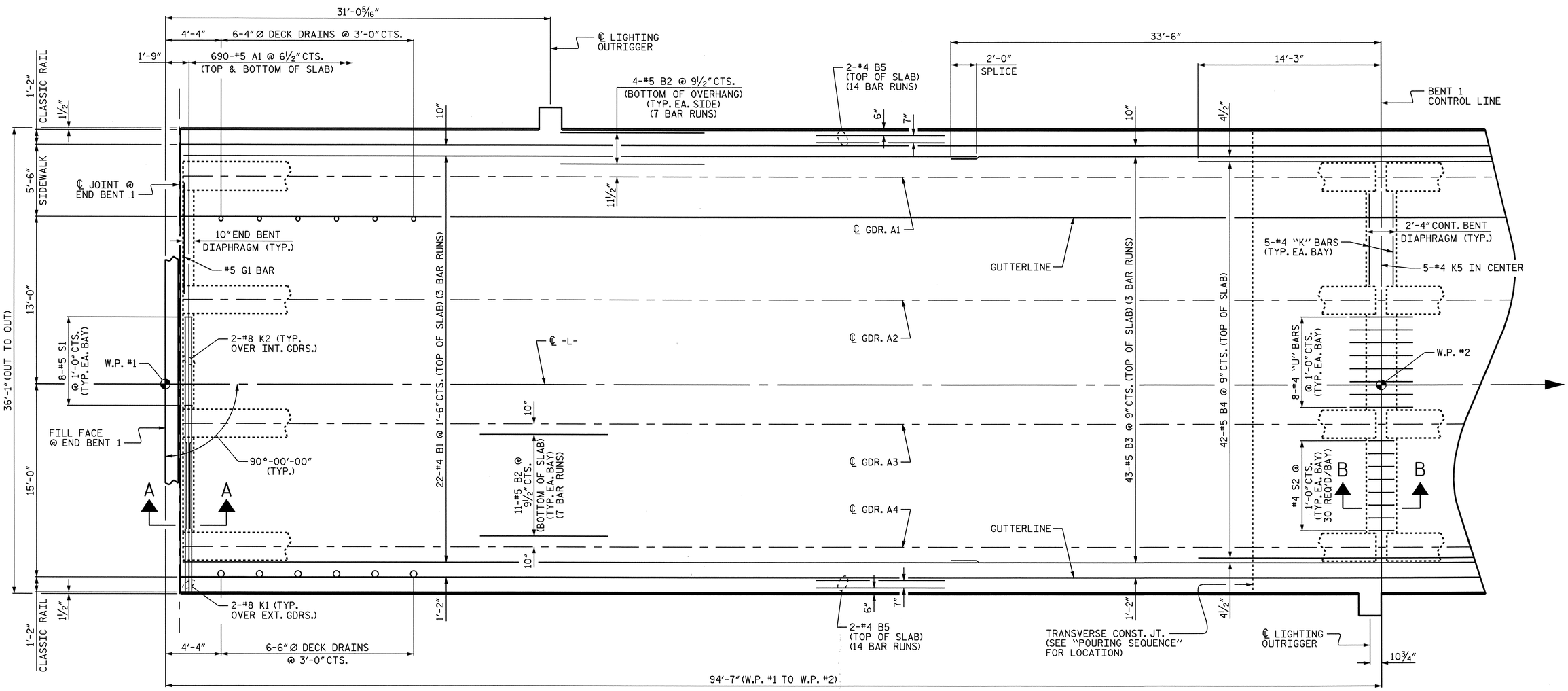

SPAN "A"

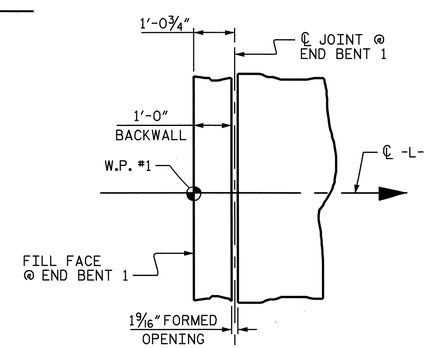

END BENT DETAIL

FOR JOINT DETAILS AT END BENT, SEE "BRIDGE APPROACH SLAB" SHEETS.

NOTES:

FOR SECTIONS, SEE "TYPICAL SECTIONS", SHEET 3 OF 5.

FOR CLASSIC CONCRETE BRIDGE RAIL REINFORCING STEEL AND DETAILS, SEE "CLASSIC CONCRETE BRIDGE RAIL" SHEETS.

FOR SIDEWALK REINFORCING STEEL AND DETAILS, SEE "SIDEWALK DETAILS" SHEETS.

PROJECT NO. B-2532

CRAVEN COUNTY

STATION: 31+21.29 -L-

SHEET 1 OF 18

STATE OF NORTH CAROLINA
DEPARTMENT OF TRANSPORTATION
RALEIGH

SUPERSTRUCTURE

PLAN OF SPAN "A"

NORTH CAROLINA PROFESSIONAL SEAL 21638 ENGINEER LAURA E. SUTTON
11/30/06

REVISIONS						SHEET NO.
NO.	BY:	DATE:	NO.	BY:	DATE:	S-16
1			3			TOTAL SHEETS
2			4			348

DRAWN BY : P.C. BREWER DATE : 7/26/06
CHECKED BY : A.S. CALLAWAY DATE : 9/18/06

24-OCT-2006 14:59
r:\Structures\pbrewer\Microstation\B2532_sd_PS_01.dgn
LSUTTON

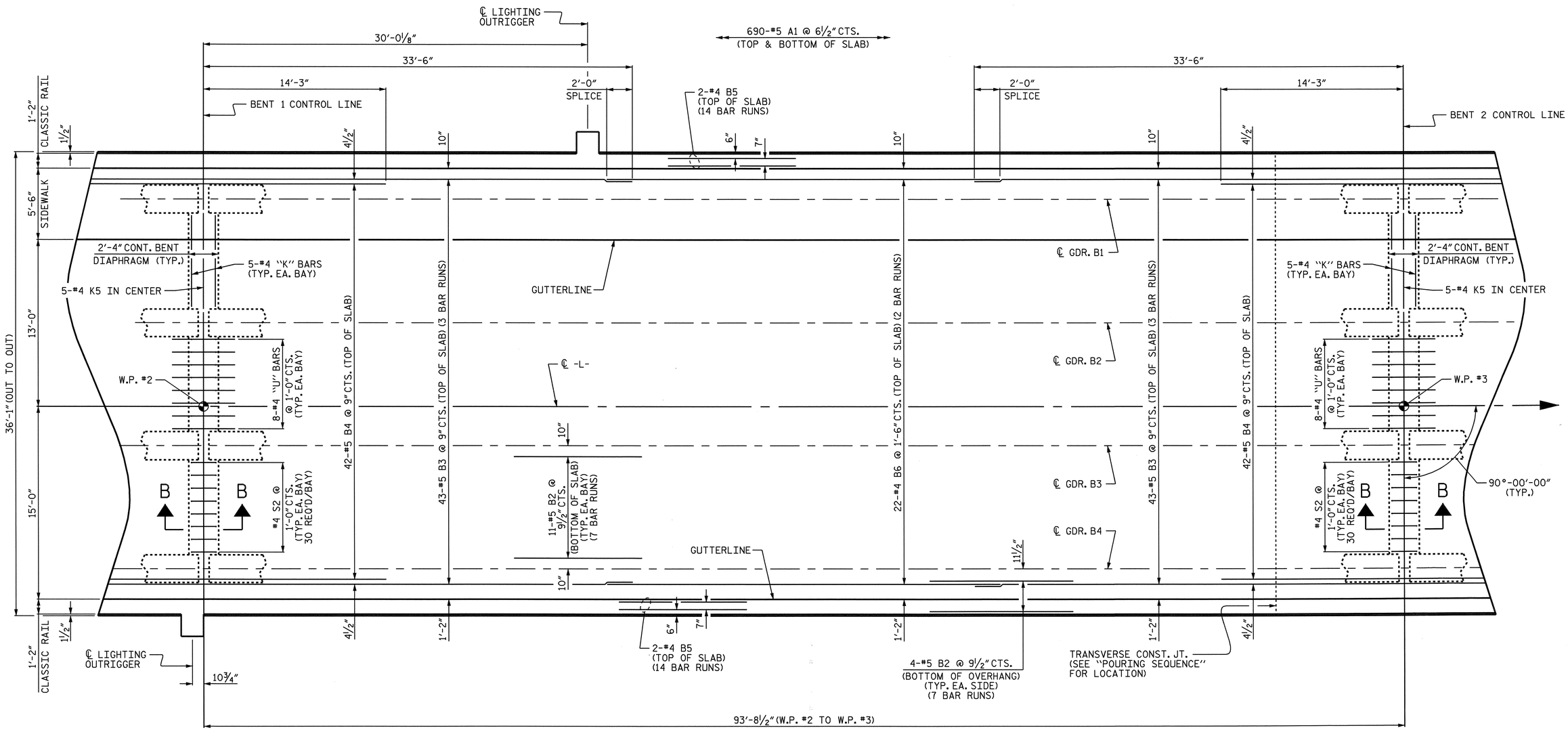

SPAN "B"

PROJECT NO. B-2532

CRAVEN COUNTY

STATION: 31+21.29 -L-

SHEET 2 OF 18

NOTES:

FOR SECTIONS, SEE "TYPICAL SECTIONS", SHEET 3 OF 5.

FOR CLASSIC CONCRETE BRIDGE RAIL REINFORCING STEEL AND DETAILS, SEE "CLASSIC CONCRETE BRIDGE RAIL" SHEETS.

FOR SIDEWALK REINFORCING STEEL AND DETAILS, SEE "SIDEWALK DETAILS" SHEETS.

NORTH CAROLINA PROFESSIONAL SEAL 21638 ENGINEER LAURA E. SUTTON

11/30/06

STATE OF NORTH CAROLINA
DEPARTMENT OF TRANSPORTATION
RALEIGH

SUPERSTRUCTURE

PLAN OF SPAN "B"

REVISIONS						SHEET NO.
NO.	BY:	DATE:	NO.	BY:	DATE:	S-17
1			3			TOTAL SHEETS
2			4			348

DRAWN BY : P.C. BREWER DATE : 7/26/06
CHECKED BY : A.S. CALLAWAY DATE : 9/18/06

24-OCT-2006 14:59
r:\Structures\pbrewer\Microstation\B2532_sd_PS_01.dgn
LSUTTON

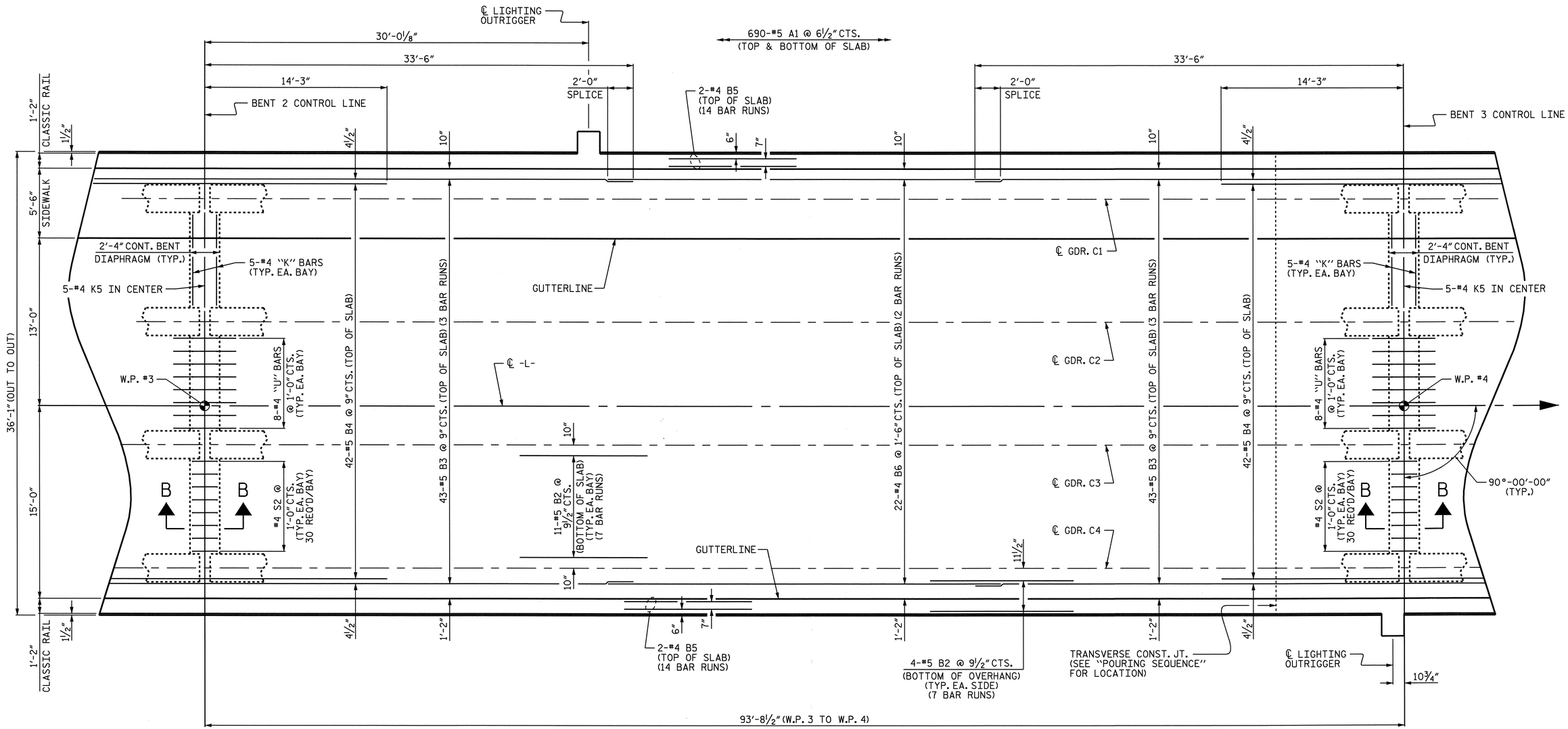

SPAN "C"

PROJECT NO. B-2532

CRAVEN COUNTY

STATION: 31+21.29 -L-

SHEET 3 OF 18

NOTES:

FOR SECTIONS, SEE "TYPICAL SECTIONS", SHEET 3 OF 5.

FOR CLASSIC CONCRETE BRIDGE RAIL REINFORCING STEEL AND DETAILS, SEE "CLASSIC CONCRETE BRIDGE RAIL" SHEETS.

FOR SIDEWALK REINFORCING STEEL AND DETAILS, SEE "SIDEWALK DETAILS" SHEETS.

NORTH CAROLINA PROFESSIONAL SEAL 21638 ENGINEER LAURA E. SUTTON
11/30/06

STATE OF NORTH CAROLINA
DEPARTMENT OF TRANSPORTATION
RALEIGH

SUPERSTRUCTURE

PLAN OF SPAN "C"

REVISIONS						SHEET NO.
NO.	BY:	DATE:	NO.	BY:	DATE:	S-18
1			3			TOTAL SHEETS
2			4			348

DRAWN BY : P.C. BREWER DATE : 7/26/06
CHECKED BY : A.S. CALLAWAY DATE : 9/18/06

24-OCT-2006 14:59
r:\Structures\pbrewer\Microstation\B2532_sd_PS_01.dgn
LSUTTON

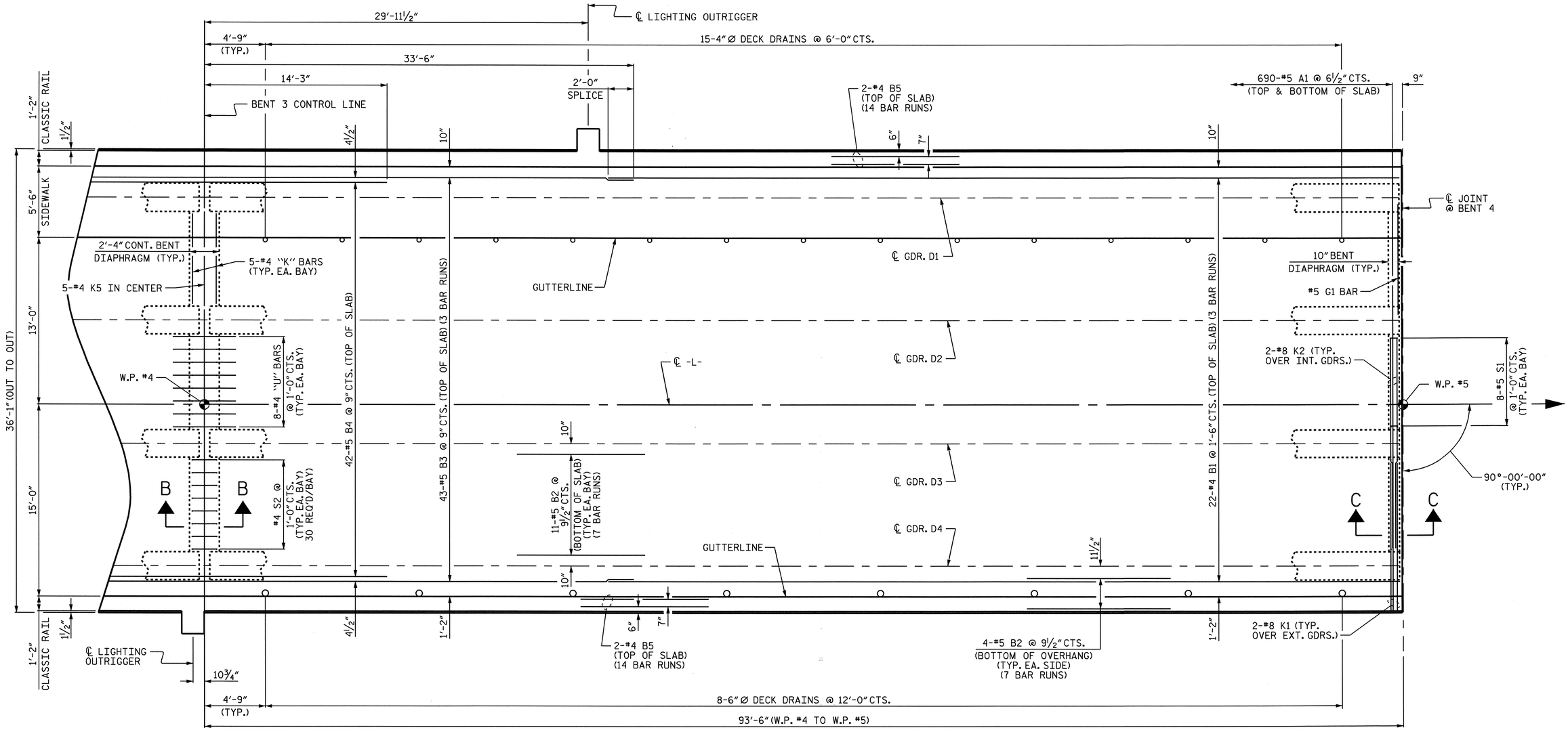

SPAN "D"

PROJECT NO. B-2532

CRAVEN COUNTY

STATION: 31+21.29 -L-

SHEET 4 OF 18

NOTES:

FOR JOINT DETAILS AT BENT 4, SEE "TYPICAL SECTIONS", SHEET 5 OF 5.

FOR SECTIONS, SEE "TYPICAL SECTIONS", SHEET 3 OF 5.

FOR CLASSIC CONCRETE BRIDGE RAIL REINFORCING STEEL AND DETAILS, SEE "CLASSIC CONCRETE BRIDGE RAIL" SHEETS.

FOR SIDEWALK REINFORCING STEEL AND DETAILS, SEE "SIDEWALK DETAILS" SHEETS.

NORTH CAROLINA PROFESSIONAL SEAL 21638 ENGINEER LAURA E. SUTTON

11/30/06

STATE OF NORTH CAROLINA
DEPARTMENT OF TRANSPORTATION
RALEIGH

SUPERSTRUCTURE

PLAN OF SPAN "D"

REVISIONS						SHEET NO.
NO.	BY:	DATE:	NO.	BY:	DATE:	S-19
1			3			TOTAL SHEETS
2			4			348

DRAWN BY : P.C. BREWER DATE : 7/26/06
CHECKED BY : A.S. CALLAWAY DATE : 9/18/06

24-OCT-2006 14:59
r:\Structures\pbrewer\Microstation\B2532_sd_PS_01.dgn
LSUTTON

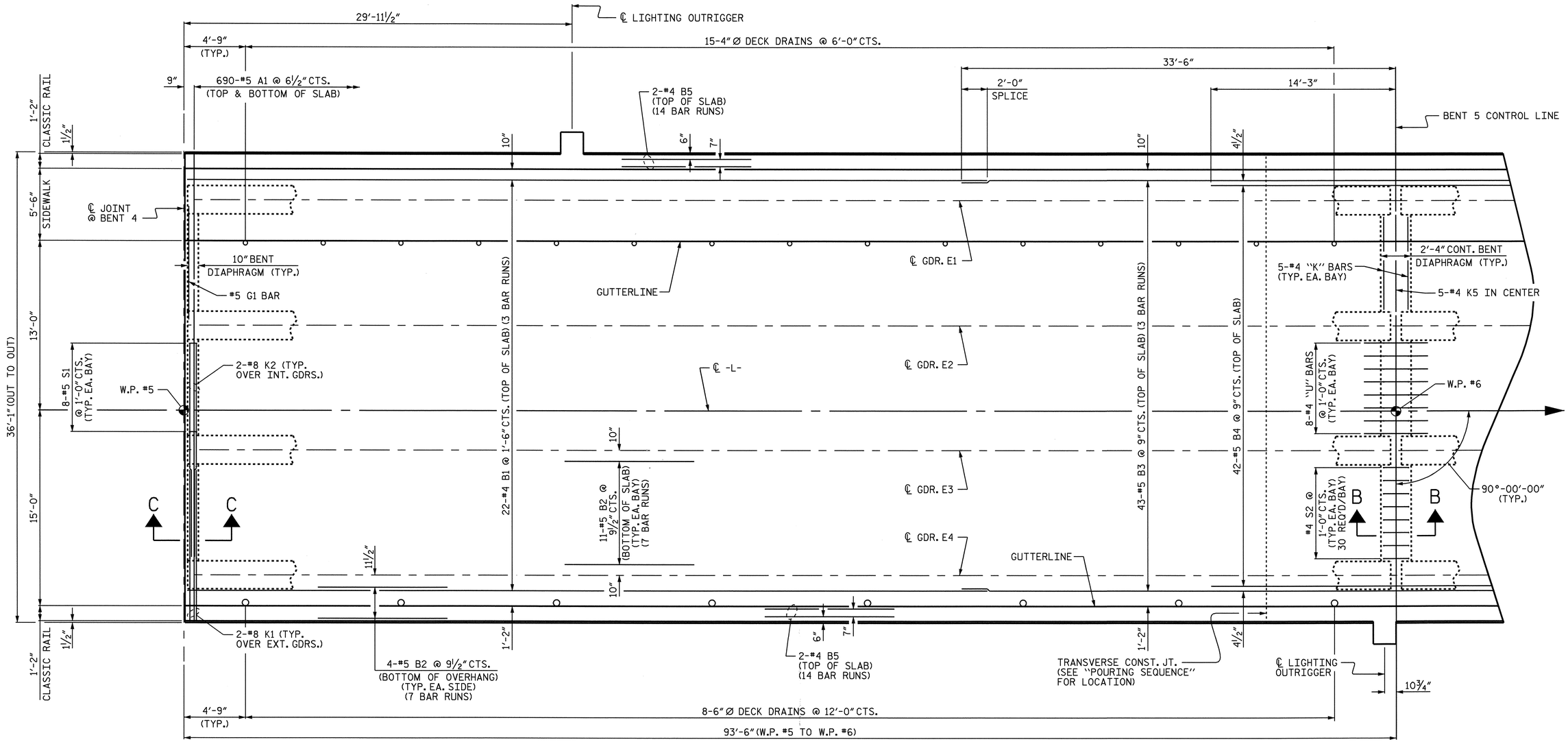

SPAN "E"

PROJECT NO. B-2532

CRAVEN COUNTY

STATION: 31+21.29 -L-

SHEET 5 OF 18

NOTES:

FOR JOINT DETAILS AT BENT 4, SEE "TYPICAL SECTIONS", SHEET 5 OF 5.

FOR SECTIONS, SEE "TYPICAL SECTIONS", SHEET 3 OF 5.

FOR CLASSIC CONCRETE BRIDGE RAIL REINFORCING STEEL AND DETAILS, SEE "CLASSIC CONCRETE BRIDGE RAIL" SHEETS.

FOR SIDEWALK REINFORCING STEEL AND DETAILS, SEE "SIDEWALK DETAILS" SHEETS.

NORTH CAROLINA PROFESSIONAL SEAL 21638 ENGINEER LAURA E. SUTTON

11/30/06

STATE OF NORTH CAROLINA
DEPARTMENT OF TRANSPORTATION
RALEIGH

SUPERSTRUCTURE

PLAN OF SPAN "E"

REVISIONS						SHEET NO.
NO.	BY:	DATE:	NO.	BY:	DATE:	S-20
1			3			TOTAL SHEETS
2			4			348

DRAWN BY : P.C. BREWER DATE : 7/26/06
CHECKED BY : A.S. CALLAWAY DATE : 9/18/06

24-OCT-2006 14:59
r:\Structures\pbrewer\Microstation\B2532_sd_PS_01.dgn
LSUTTON

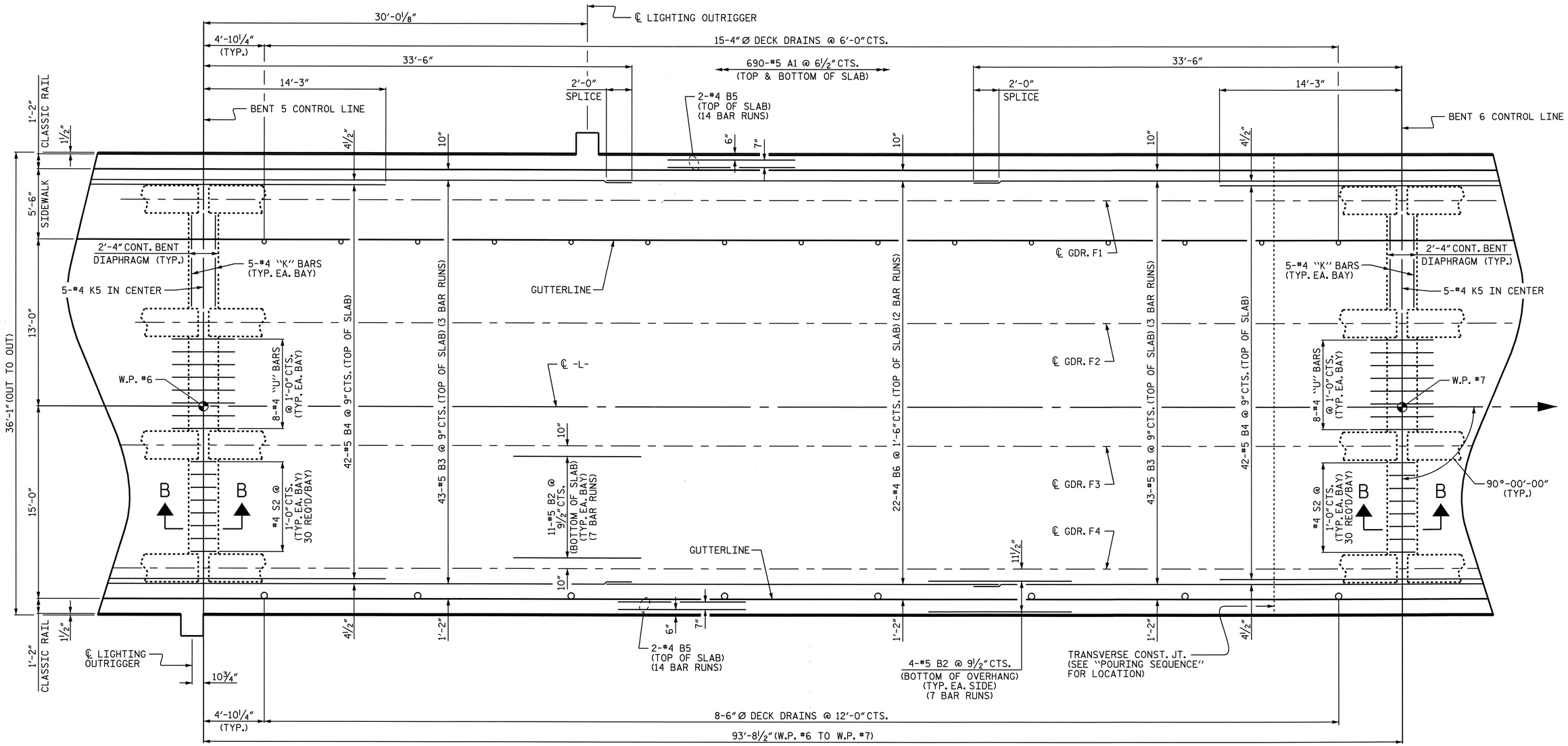

SPAN "F"

PROJECT NO. B-2532

CRAVEN COUNTY

STATION: 31+21.29 -L-

SHEET 6 OF 18

NOTES:

FOR SECTIONS, SEE "TYPICAL SECTIONS", SHEET 3 OF 5.

FOR CLASSIC CONCRETE BRIDGE RAIL REINFORCING STEEL AND DETAILS, SEE "CLASSIC CONCRETE BRIDGE RAIL" SHEETS.

FOR SIDEWALK REINFORCING STEEL AND DETAILS, SEE "SIDEWALK DETAILS" SHEETS.

NORTH CAROLINA PROFESSIONAL SEAL 21638 ENGINEER LAURA E. SUTTON
11/30/06

STATE OF NORTH CAROLINA
DEPARTMENT OF TRANSPORTATION
RALEIGH

SUPERSTRUCTURE

PLAN OF SPAN "F"

REVISIONS						SHEET NO.
NO.	BY:	DATE:	NO.	BY:	DATE:	8-21
1			3			TOTAL SHEETS
2			4			348

DRAWN BY : P.C. BREWER DATE : 7/26/06
CHECKED BY : A.S. CALLAWAY DATE : 9/18/06

24-OCT-2006 14:58
r:\Structures\pbrewer\Microstation\B2532_sd_PS_01.dgn
LSUTTON

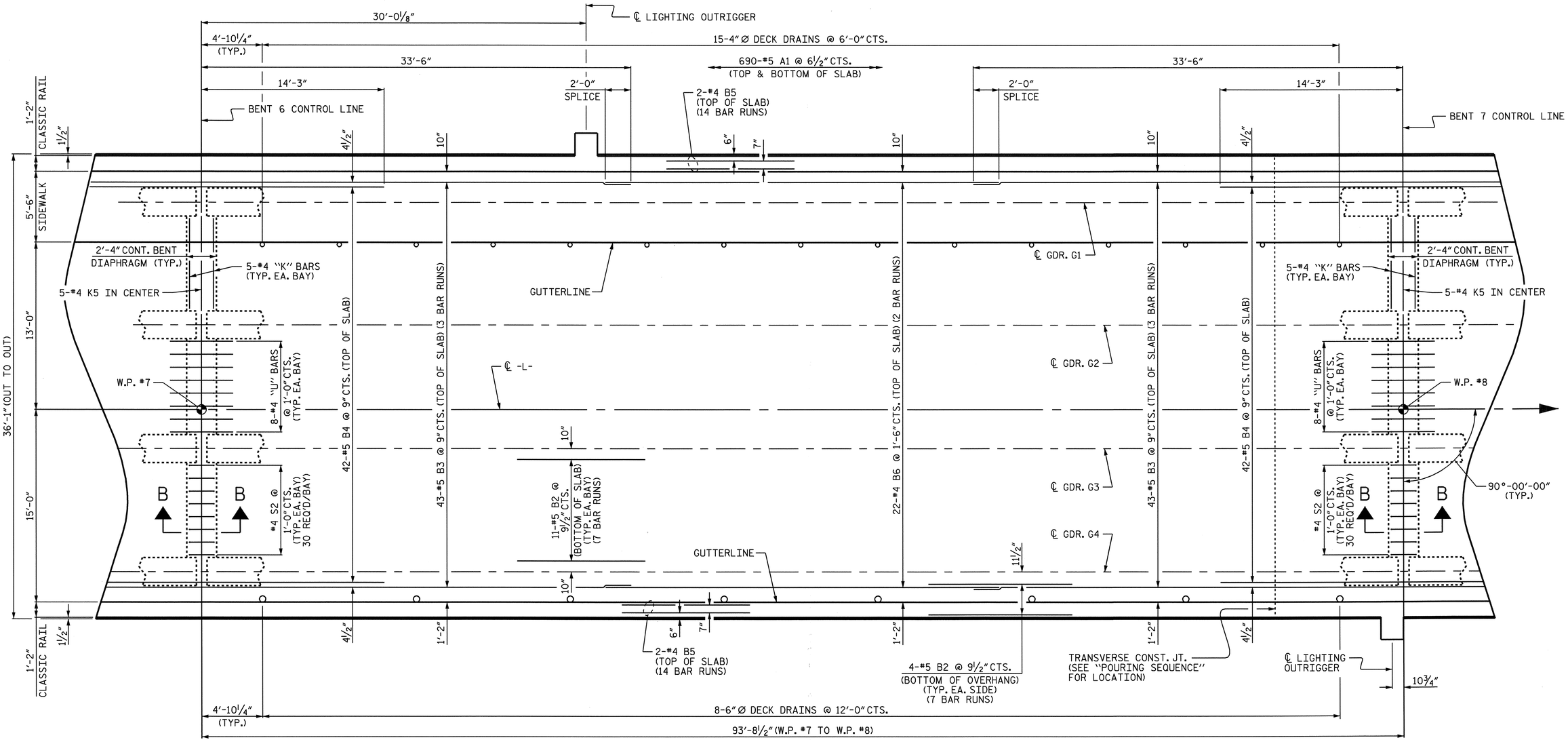

SPAN "G"

PROJECT NO. B-2532

CRAVEN COUNTY

STATION: 31+21.29 -L-

SHEET 7 OF 18

NOTES:

FOR SECTIONS, SEE "TYPICAL SECTIONS", SHEET 3 OF 5.

FOR CLASSIC CONCRETE BRIDGE RAIL REINFORCING STEEL AND DETAILS, SEE "CLASSIC CONCRETE BRIDGE RAIL" SHEETS.

FOR SIDEWALK REINFORCING STEEL AND DETAILS, SEE "SIDEWALK DETAILS" SHEETS.

NORTH CAROLINA PROFESSIONAL SEAL 21638 ENGINEER LAURA E. SUTTON

11/30/06

STATE OF NORTH CAROLINA
DEPARTMENT OF TRANSPORTATION
RALEIGH

SUPERSTRUCTURE

PLAN OF SPAN "G"

REVISIONS						SHEET NO.
NO.	BY:	DATE:	NO.	BY:	DATE:	S-22
1			3			TOTAL SHEETS
2			4			348

DRAWN BY : P.C. BREWER DATE : 7/26/06
CHECKED BY : A.S. CALLAWAY DATE : 9/18/06

24-OCT-2006 14:58
r:\Structures\pbrewer\Microstation\B2532_sd_PS_01.dgn
LSUTTON

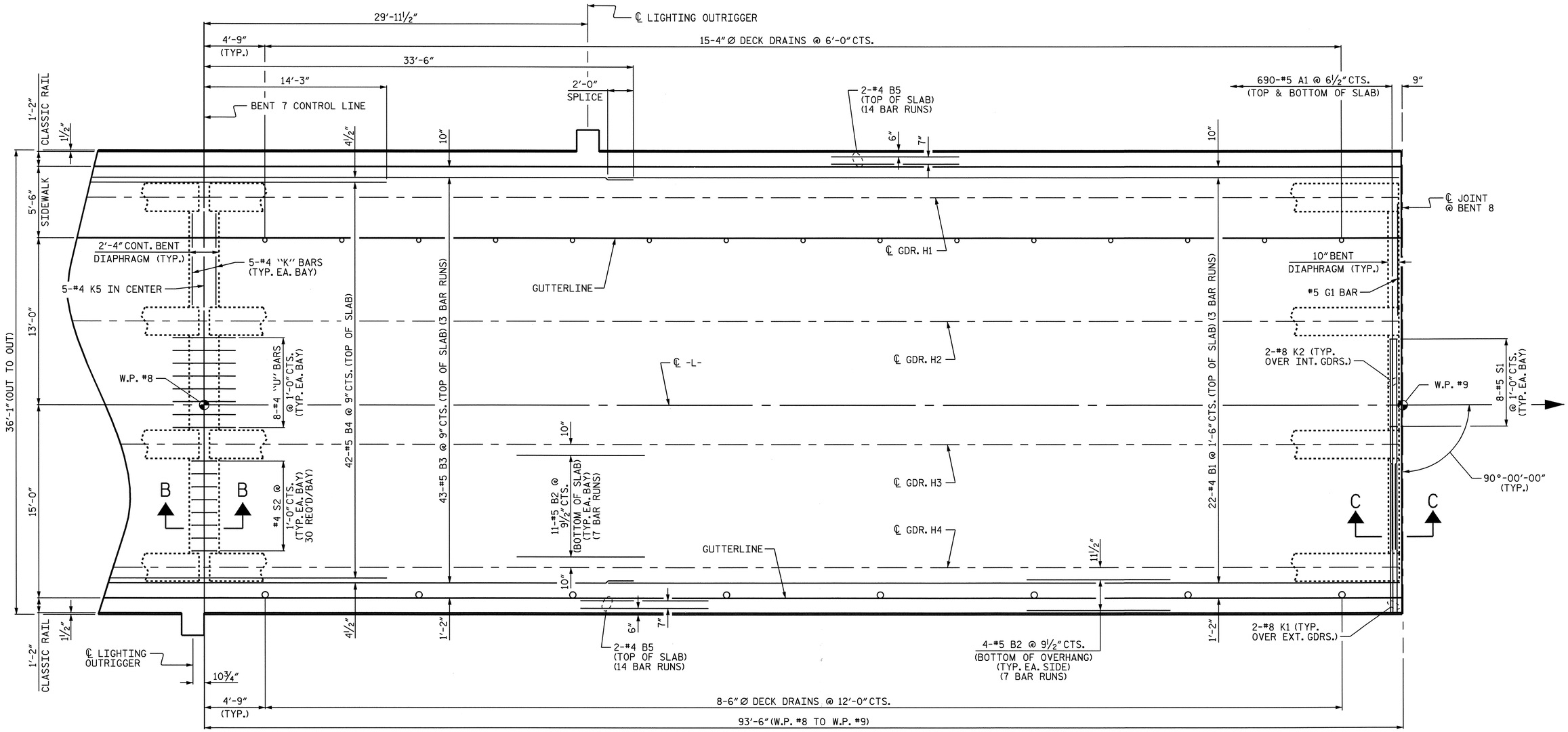

SPAN "H"

PROJECT NO. B-2532

CRAVEN COUNTY

STATION: 31+21.29 -L-

SHEET 8 OF 18

NOTES:

FOR JOINT DETAILS AT BENT 8, SEE "TYPICAL SECTIONS", SHEET 5 OF 5.

FOR SECTIONS, SEE "TYPICAL SECTIONS", SHEET 3 OF 5.

FOR CLASSIC CONCRETE BRIDGE RAIL REINFORCING STEEL AND DETAILS, SEE "CLASSIC CONCRETE BRIDGE RAIL" SHEETS.

FOR SIDEWALK REINFORCING STEEL AND DETAILS, SEE "SIDEWALK DETAILS" SHEETS.

NORTH CAROLINA PROFESSIONAL SEAL 21638 ENGINEER LAURA E. SUTTON

11/30/06

STATE OF NORTH CAROLINA
DEPARTMENT OF TRANSPORTATION
RALEIGH

SUPERSTRUCTURE

PLAN OF SPAN "H"

REVISIONS						SHEET NO.
NO.	BY:	DATE:	NO.	BY:	DATE:	S-23
1			3			TOTAL SHEETS
2			4			348

DRAWN BY : P.C. BREWER DATE : 7/26/06
CHECKED BY : A.S. CALLAWAY DATE : 9/18/06

24-OCT-2006 14:58
r:\Structures\pbrewer\Microstation\B2532_sd_PS_01.dgn
LSUTTON

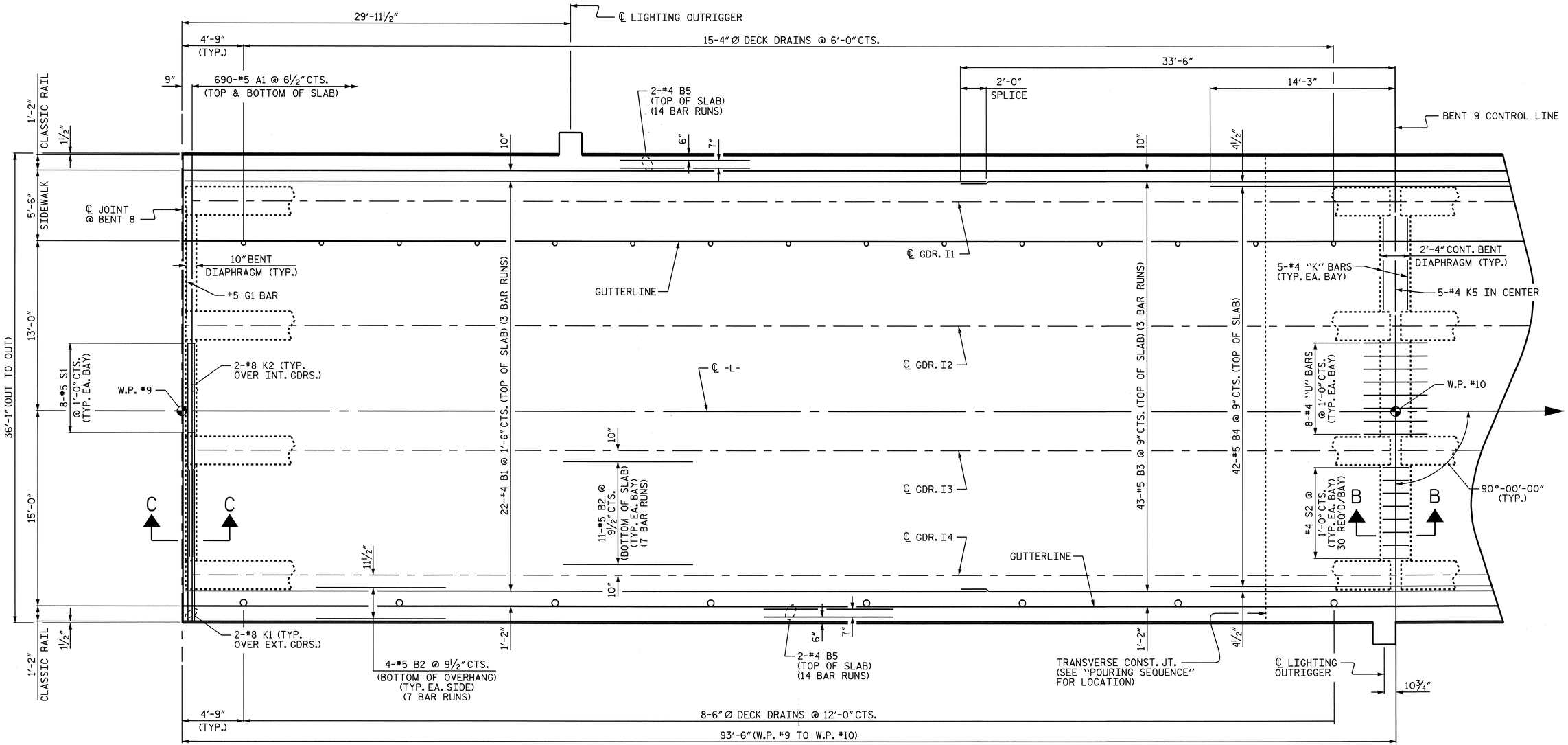

SPAN "I"

NOTES:

FOR JOINT DETAILS AT BENT 8, SEE "TYPICAL SECTIONS", SHEET 5 OF 5.

FOR SECTIONS, SEE "TYPICAL SECTIONS", SHEET 3 OF 5.

FOR CLASSIC CONCRETE BRIDGE RAIL REINFORCING STEEL AND DETAILS, SEE "CLASSIC CONCRETE BRIDGE RAIL" SHEETS.

FOR SIDEWALK REINFORCING STEEL AND DETAILS, SEE "SIDEWALK DETAILS" SHEETS.

PROJECT NO. B-2532

CRAVEN COUNTY

STATION: 31+21.29 -L-

SHEET 9 OF 18

STATE OF NORTH CAROLINA
DEPARTMENT OF TRANSPORTATION
RALEIGH

SUPERSTRUCTURE

PLAN OF SPAN "I"

NORTH CAROLINA PROFESSIONAL SEAL 21638 ENGINEER LAURA E. SUTTON
Laura E. Sutton 11/30/06

REVISIONS						SHEET NO.
NO.	BY:	DATE:	NO.	BY:	DATE:	S-24
1			3			TOTAL SHEETS
2			4			348

DRAWN BY : P.C. BREWER DATE : 7/26/06
CHECKED BY : A.S. CALLAWAY DATE : 9/18/06

24-OCT-2006 14:58
r:\Structures\pbrewer\Microstation\B2532_sd_PS_01.dgn
LSUTTON

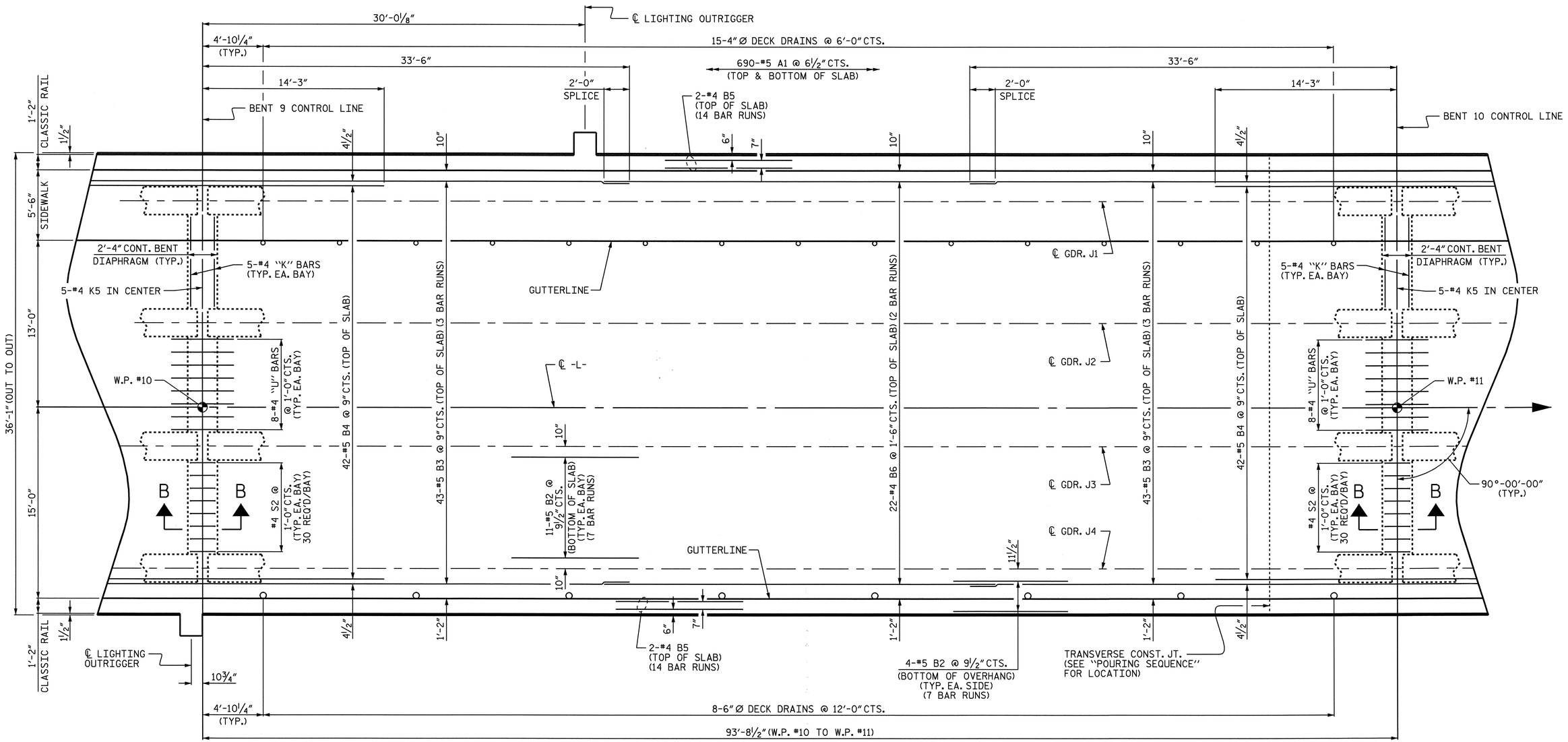

SPAN "J"

PROJECT NO. B-2532

CRAVEN COUNTY

STATION: 31+21.29 -L-

SHEET 10 OF 18

NOTES:

FOR SECTIONS, SEE "TYPICAL SECTIONS", SHEET 3 OF 5.

FOR CLASSIC CONCRETE BRIDGE RAIL REINFORCING STEEL AND DETAILS, SEE "CLASSIC CONCRETE BRIDGE RAIL" SHEETS.

FOR SIDEWALK REINFORCING STEEL AND DETAILS, SEE "SIDEWALK DETAILS" SHEETS.

NORTH CAROLINA PROFESSIONAL SEAL 21638 ENGINEER LAURA E. SUTTON

11/20/06

STATE OF NORTH CAROLINA
DEPARTMENT OF TRANSPORTATION
RALEIGH

SUPERSTRUCTURE

PLAN OF SPAN "J"

REVISIONS						SHEET NO.
NO.	BY:	DATE:	NO.	BY:	DATE:	S-25
1			3			TOTAL SHEETS
2			4			348

DRAWN BY : P.C. BREWER DATE : 7/26/06
CHECKED BY : A.S. CALLAWAY DATE : 9/18/06

24-OCT-2006 14:58
r:\Structures\pbrewer\Microstation\B2532_sd_PS_01.dgn
LSUTTON

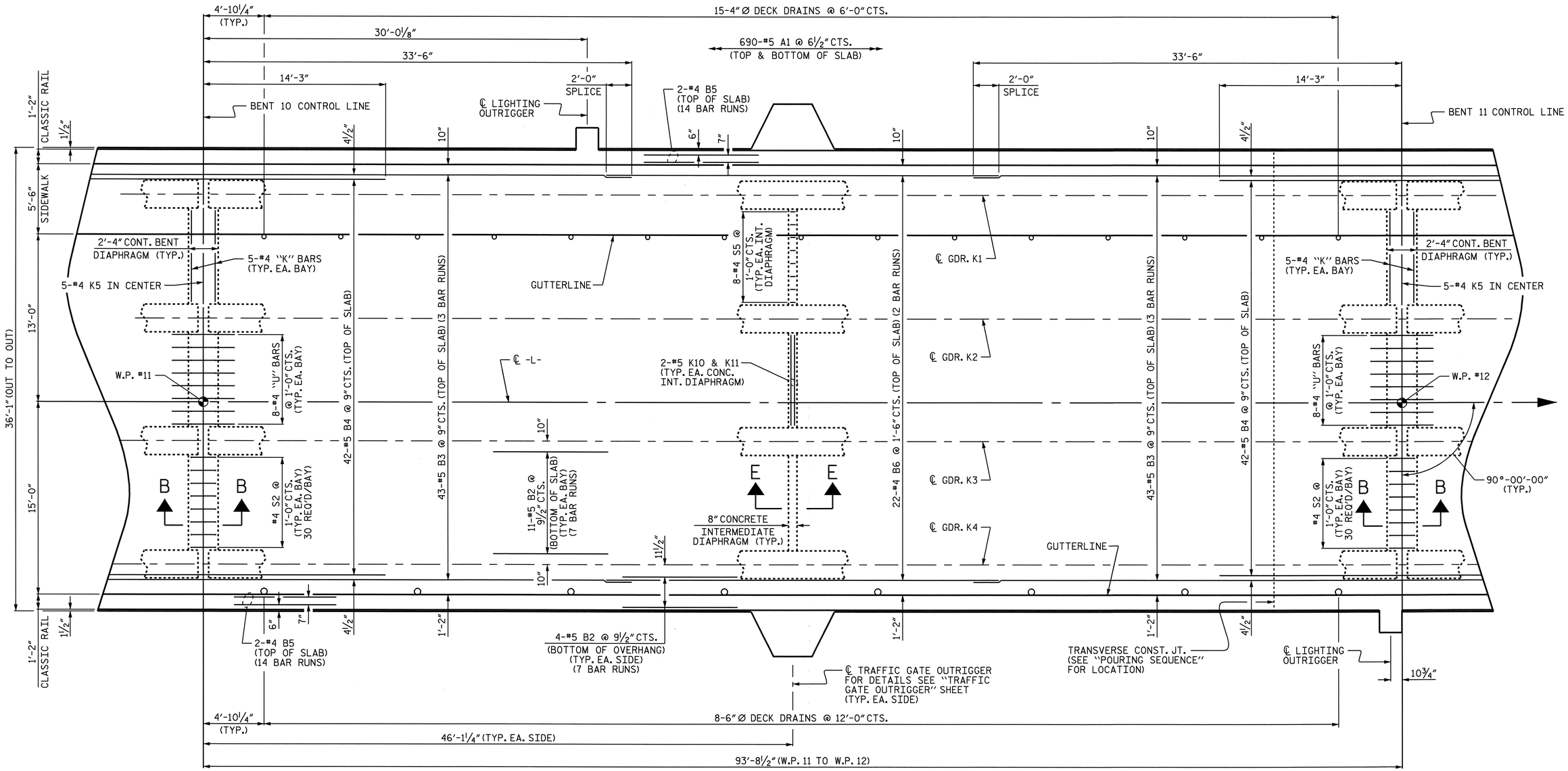

SPAN "K"

PROJECT NO. B-2532

CRAVEN COUNTY

STATION: 31+21.29 -L-

SHEET 11 OF 18

STATE OF NORTH CAROLINA
DEPARTMENT OF TRANSPORTATION
RALEIGH

SUPERSTRUCTURE

PLAN OF SPAN "K"

NOTES:

FOR SECTIONS, SEE "TYPICAL SECTIONS", SHEET 3 OF 5.

FOR CLASSIC CONCRETE BRIDGE RAIL REINFORCING STEEL AND DETAILS, SEE "CLASSIC CONCRETE BRIDGE RAIL" SHEETS.

FOR SIDEWALK REINFORCING STEEL AND DETAILS, SEE "SIDEWALK DETAILS" SHEETS.

NORTH CAROLINA PROFESSIONAL SEAL 21638 ENGINEER LAURA E. SUTTON
11/30/06

REVISIONS						SHEET NO.
NO.	BY:	DATE:	NO.	BY:	DATE:	S-26
1			3			TOTAL SHEETS
2			4			348

DRAWN BY : P.C. BREWER DATE : 7/26/06
CHECKED BY : A.S. CALLAWAY DATE : 9/18/06

24-OCT-2006 14:58
r:\Structures\pbrewer\Microstation\B2532_sd_PS_01.dgn
LSUTTON

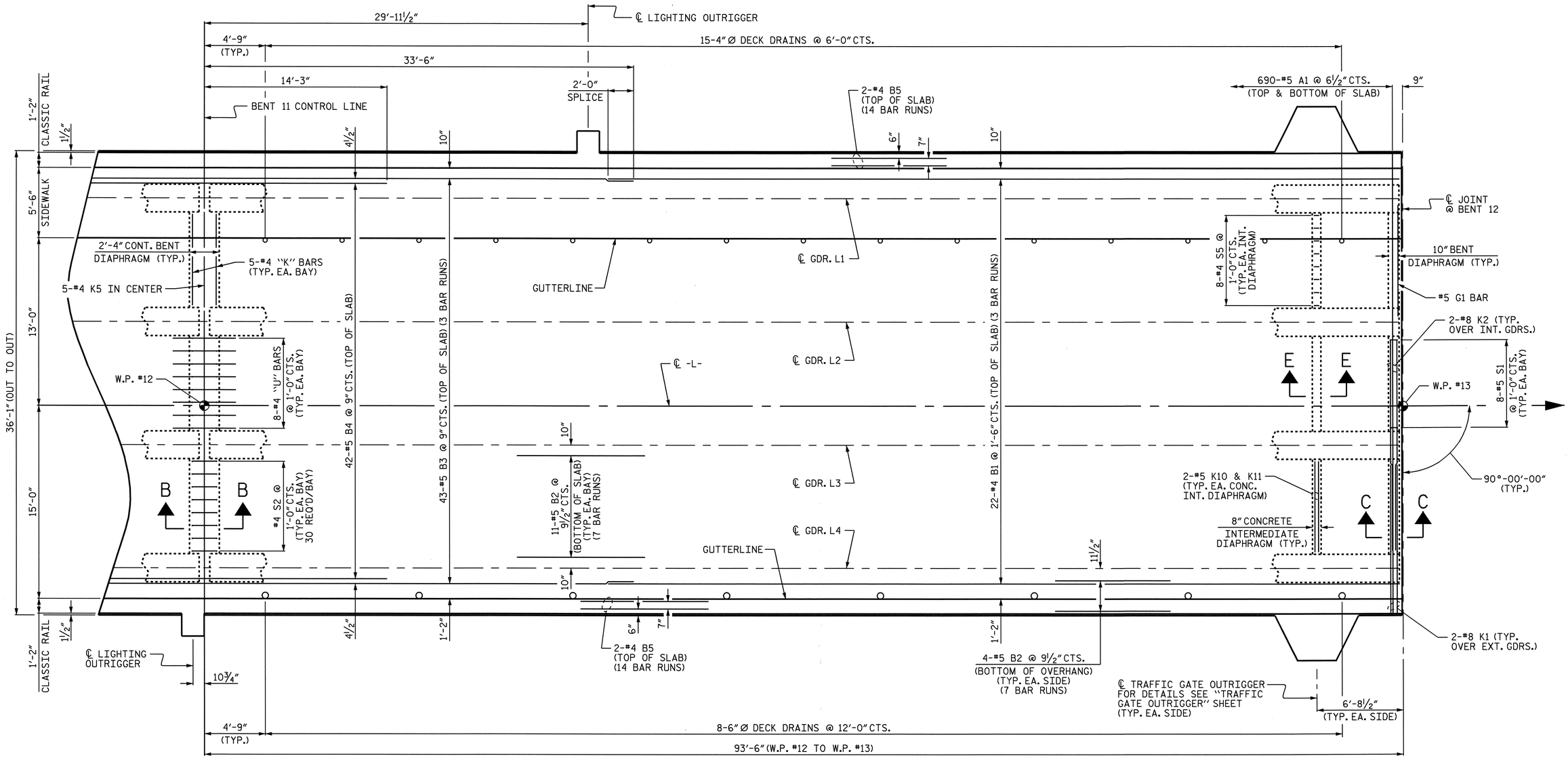

SPAN "L"

PROJECT NO. B-2532

CRAVEN COUNTY

STATION: 31+21.29 -L-

SHEET 12 OF 18

NOTES:

FOR JOINT DETAILS AT BENT 12, SEE "TYPICAL SECTIONS", SHEET 5 OF 5.

FOR SECTIONS, SEE "TYPICAL SECTIONS", SHEET 3 OF 5.

FOR CLASSIC CONCRETE BRIDGE RAIL REINFORCING STEEL AND DETAILS, SEE "CLASSIC CONCRETE BRIDGE RAIL" SHEETS.

FOR SIDEWALK REINFORCING STEEL AND DETAILS, SEE "SIDEWALK DETAILS" SHEETS.

NORTH CAROLINA PROFESSIONAL SEAL 21638 ENGINEER LAURA E. SUTTON

11/29/06

STATE OF NORTH CAROLINA
DEPARTMENT OF TRANSPORTATION
RALEIGH

SUPERSTRUCTURE

PLAN OF SPAN "L"

REVISIONS						SHEET NO.
NO.	BY:	DATE:	NO.	BY:	DATE:	S-27
1			3			TOTAL SHEETS
2			4			348

DRAWN BY : P.C. BREWER DATE : 7/26/06
CHECKED BY : A.S. CALLAWAY DATE : 9/18/06

24-OCT-2006 14:58
r:\Structures\pbrewer\Microstation\B2532_sd_PS_01.dgn
LSUTTON

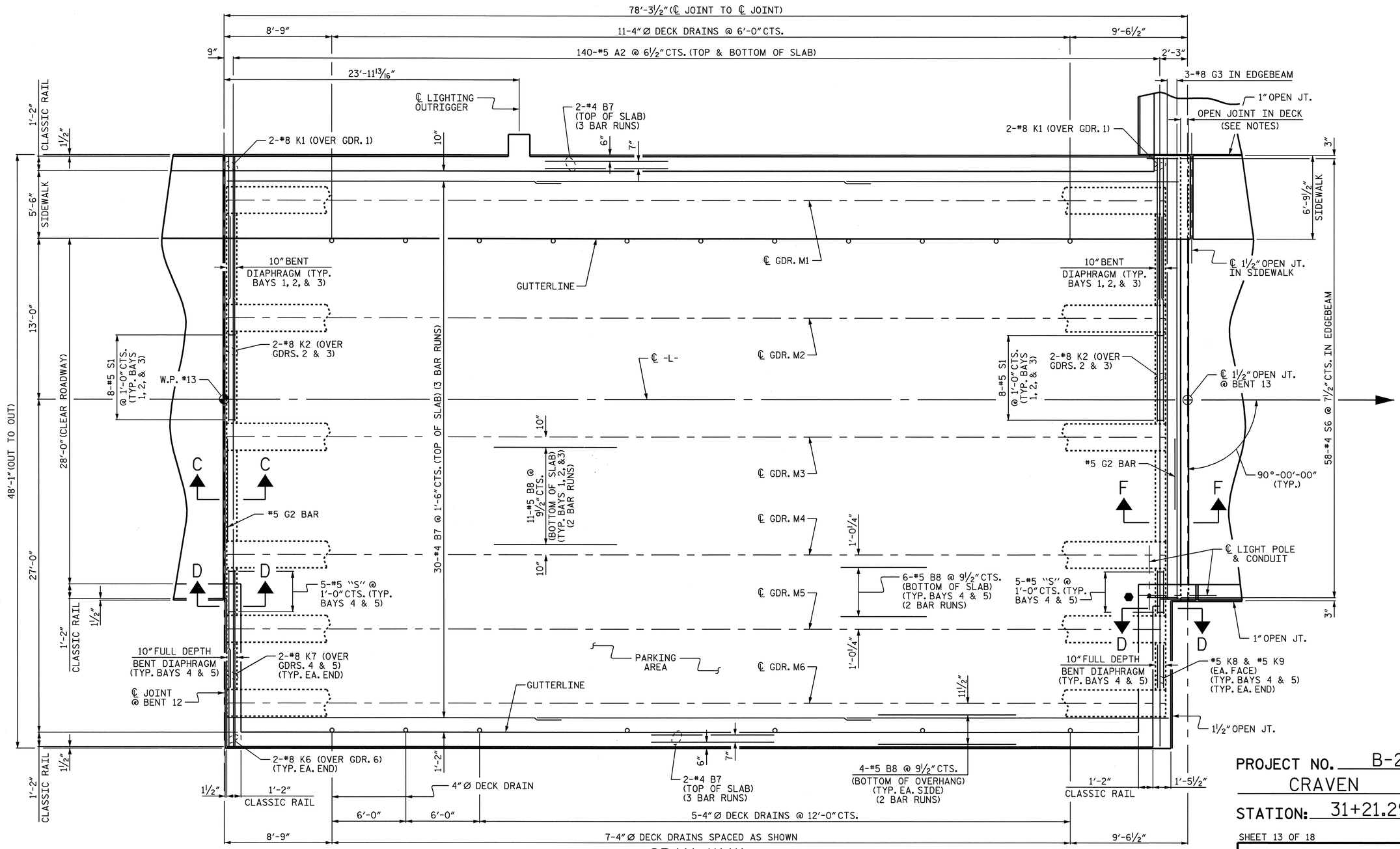

SPAN "M"

NOTES:

FOR JOINT DETAILS AT BENT 12, SEE "TYPICAL SECTIONS", SHEET 5 OF 5.

FOR JOINT DETAILS AT BENT 13, SEE VOLUME 2 - BASCULE SPAN BRIDGE DRAWINGS.

FOR SECTIONS, SEE "TYPICAL SECTIONS", SHEET 3 OF 5.

FOR CLASSIC CONCRETE BRIDGE RAIL REINFORCING STEEL AND DETAILS, SEE "CLASSIC CONCRETE BRIDGE RAIL" SHEETS.

FOR SIDEWALK REINFORCING STEEL AND DETAILS, SEE "SIDEWALK DETAILS" SHEETS.

⬢ LOCATION OF PERMANENT IMPACT ATTENUATOR. ROADWAY PAY ITEM AND DETAIL.

NORTH CAROLINA PROFESSIONAL SEAL 21638 ENGINEER LAURA E. SUTTON
2/9/07

PROJECT NO. B-2532
CRAVEN COUNTY
STATION: 31+21.29 -L-

SHEET 13 OF 18

STATE OF NORTH CAROLINA
DEPARTMENT OF TRANSPORTATION
RALEIGH

SUPERSTRUCTURE

PLAN OF SPAN "M"

REVISIONS						SHEET NO.
NO.	BY:	DATE:	NO.	BY:	DATE:	S-28
1			3			TOTAL SHEETS
2			4			348

DRAWN BY : P.C. BREWER DATE : 7/26/06
CHECKED BY : A.S. CALLAWAY DATE : 9/18/06

08-FEB-2007 16:15
R:\Structures\pbrewer\Microstation\B2532_sd_PS_01.dgn
LSUTTON

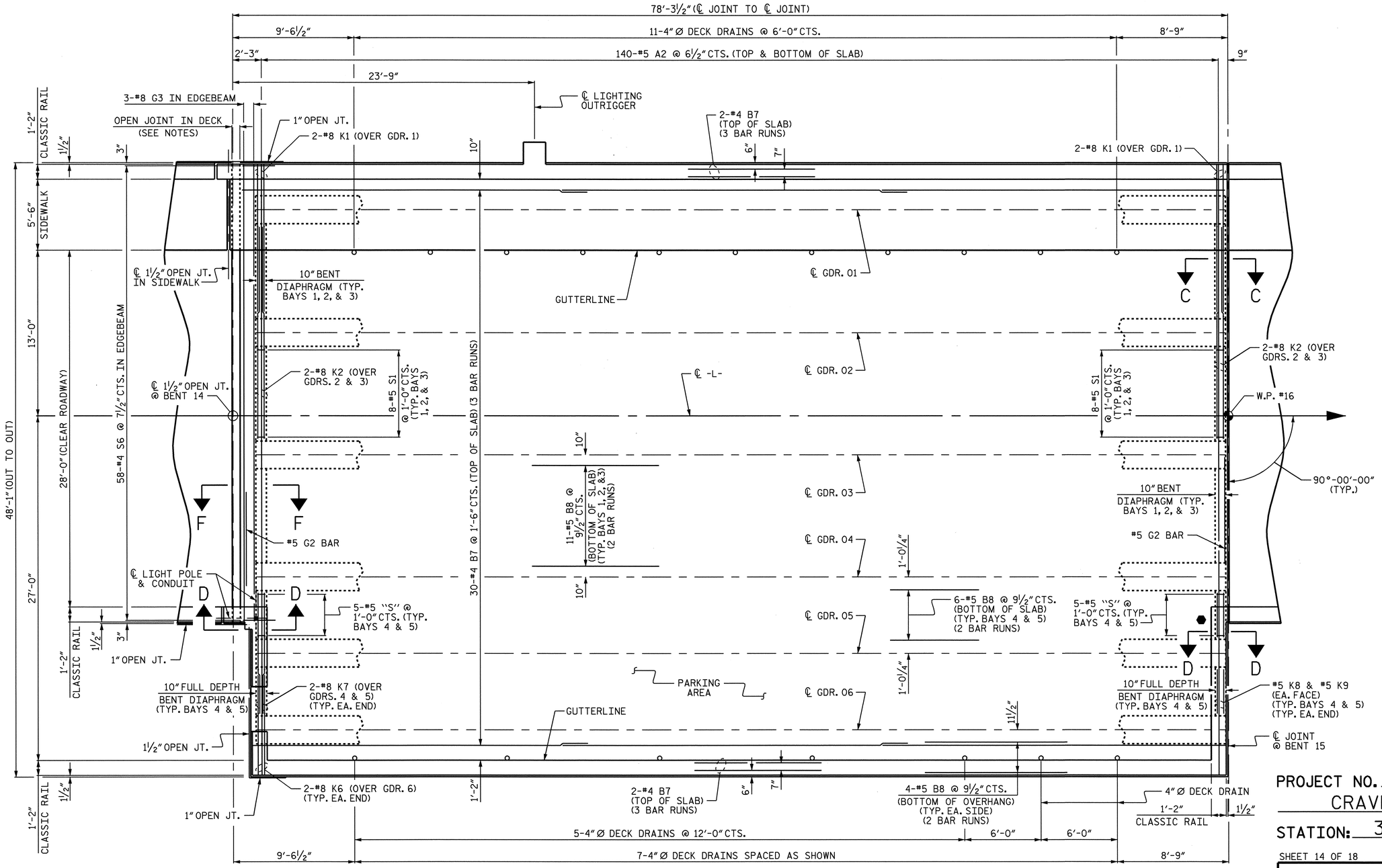

SPAN "O"

PROJECT NO. B-2532

CRAVEN COUNTY

STATION: 31+21.29 -L-

SHEET 14 OF 18

STATE OF NORTH CAROLINA
DEPARTMENT OF TRANSPORTATION
RALEIGH

SUPERSTRUCTURE

PLAN OF SPAN "O"

NOTES:

FOR JOINT DETAILS AT BENT 14, SEE VOLUME 2 - BASCULE SPAN BRIDGE DRAWINGS.

FOR JOINT DETAILS AT BENT 15, SEE "TYPICAL SECTIONS", SHEET 5 OF 5.

FOR SECTIONS, SEE "TYPICAL SECTIONS", SHEET 3 OF 5.

FOR CLASSIC CONCRETE BRIDGE RAIL REINFORCING STEEL AND DETAILS, SEE "CLASSIC CONCRETE BRIDGE RAIL" SHEETS.

FOR SIDEWALK REINFORCING STEEL AND DETAILS, SEE "SIDEWALK DETAILS" SHEETS.

● LOCATION OF PERMANENT IMPACT ATTENUATOR. ROADWAY PAY ITEM AND DETAIL.

NORTH CAROLINA PROFESSIONAL SEAL 21638 ENGINEER LAURA E. SUTTON
2/9/07

REVISIONS								SHEET NO.
NO.	BY:	DATE:	NO.	BY:	DATE:			S-29
1			3					TOTAL SHEETS
2			4					348

DRAWN BY : P.C. BREWER DATE : 7/26/06
CHECKED BY : A.S. CALLAWAY DATE : 9/18/06

08-FEB-2007 16:15
R:\Structures\pbrewer\Microstation\B2532_sd_PS_01.dgn
LSUTTON

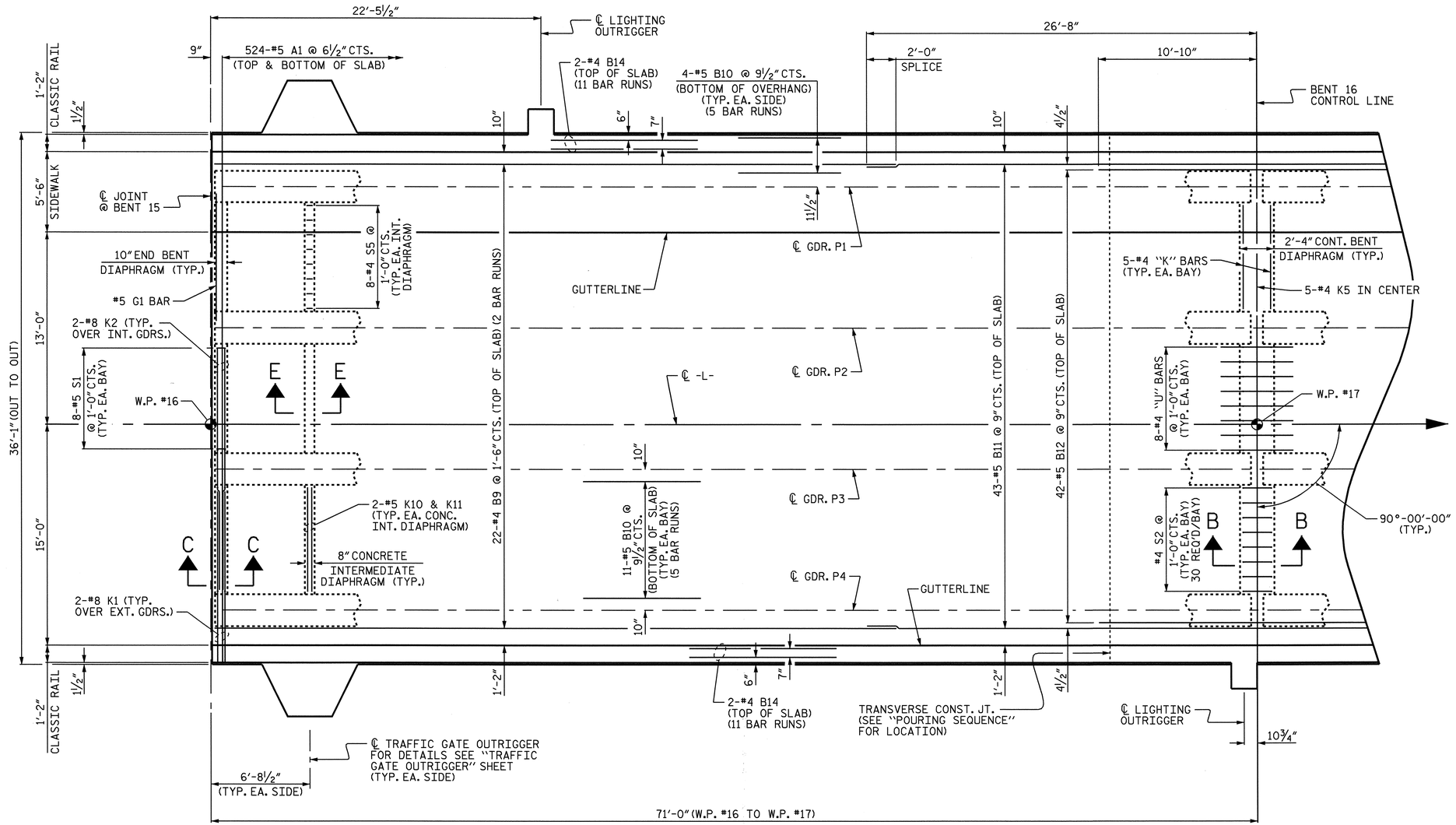

SPAN "P"

PROJECT NO. B-2532
CRAVEN COUNTY
STATION: 31+21.29 -L-

SHEET 15 OF 18

NOTES:

FOR JOINT DETAILS AT BENT 15, SEE "TYPICAL SECTIONS", SHEET 5 OF 5.

FOR SECTIONS, SEE "TYPICAL SECTIONS", SHEET 3 OF 5.

FOR CLASSIC CONCRETE BRIDGE RAIL REINFORCING STEEL AND DETAILS, SEE "CLASSIC CONCRETE BRIDGE RAIL" SHEETS.

FOR SIDEWALK REINFORCING STEEL AND DETAILS, SEE "SIDEWALK DETAILS" SHEETS.

NORTH CAROLINA PROFESSIONAL SEAL 21638 ENGINEER LAURA E. SUTTON
Laura E. Sutton 11/30/06

STATE OF NORTH CAROLINA
DEPARTMENT OF TRANSPORTATION
RALEIGH

SUPERSTRUCTURE

PLAN OF SPAN "P"

REVISIONS						SHEET NO.
NO.	BY:	DATE:	NO.	BY:	DATE:	S-30
1			3			TOTAL SHEETS
2			4			348

DRAWN BY : P.C. BREWER DATE : 7/26/06
CHECKED BY : A.S. CALLAWAY DATE : 9/18/06

24-OCT-2006 14:57
r:\Structures\pbrewer\Microstation\B2532_sd_PS_01.dgn
LSUTTON

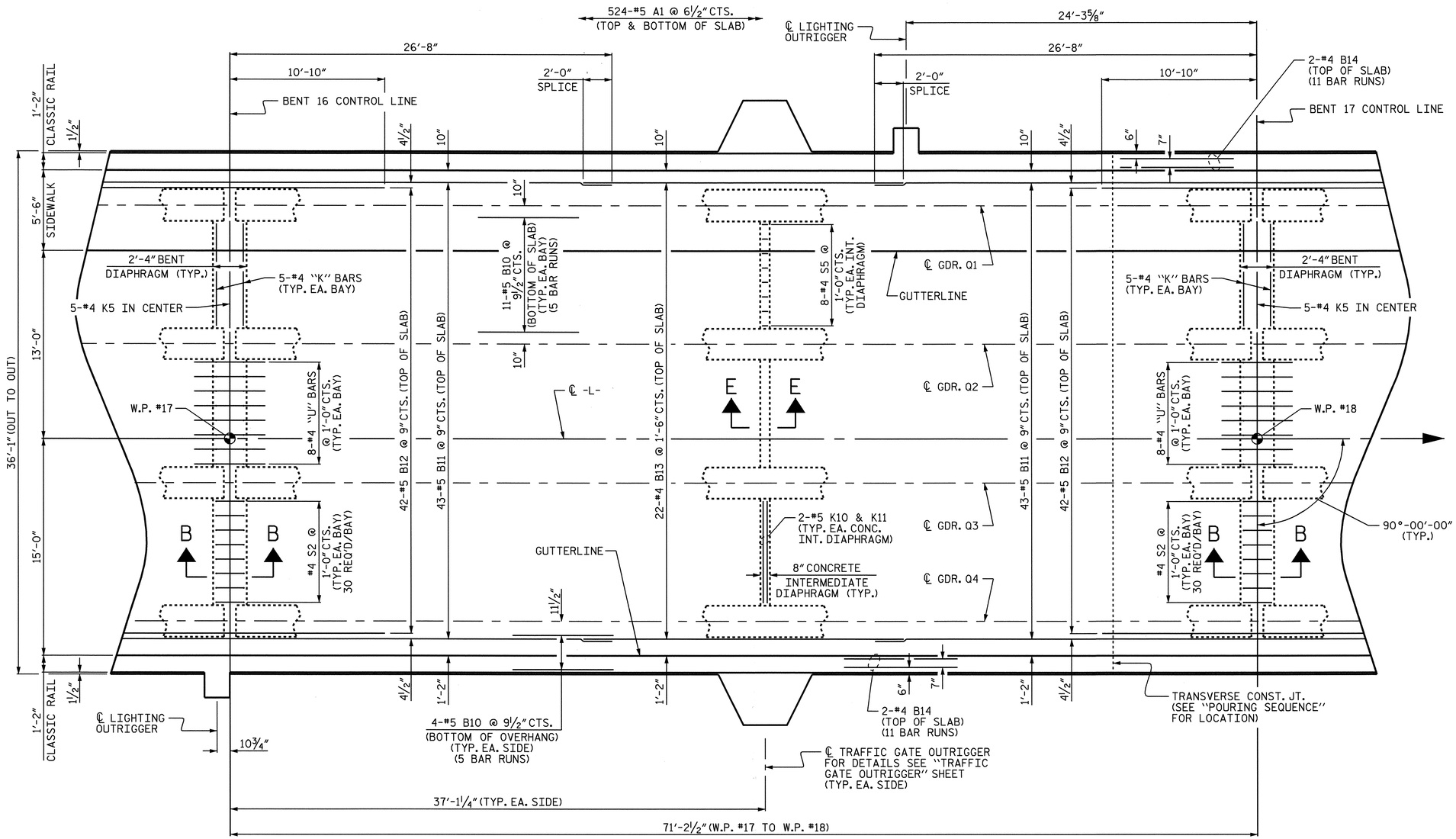

SPAN "Q"

PROJECT NO. B-2532
CRAVEN COUNTY
STATION: 31+21.29 -L-

SHEET 16 OF 18

NOTES:

FOR SECTIONS, SEE "TYPICAL SECTIONS", SHEET 3 OF 5.

FOR CLASSIC CONCRETE BRIDGE RAIL REINFORCING STEEL AND DETAILS, SEE "CLASSIC CONCRETE BRIDGE RAIL" SHEETS.

FOR SIDEWALK REINFORCING STEEL AND DETAILS, SEE "SIDEWALK DETAILS" SHEETS.

NORTH CAROLINA PROFESSIONAL SEAL 21638 ENGINEER LAURA E. SUTTON
11/30/06

STATE OF NORTH CAROLINA
DEPARTMENT OF TRANSPORTATION
RALEIGH

SUPERSTRUCTURE

PLAN OF SPAN "Q"

REVISIONS						SHEET NO.
NO.	BY:	DATE:	NO.	BY:	DATE:	S-31
1			3			TOTAL SHEETS
2			4			348

DRAWN BY : P.C. BREWER DATE : 7/26/06
CHECKED BY : A.S. CALLAWAY DATE : 9/18/06

24-OCT-2006 14:57
r:\Structures\pbrewer\Microstation\B2532_sd_PS_01.dgn
LSUTTON

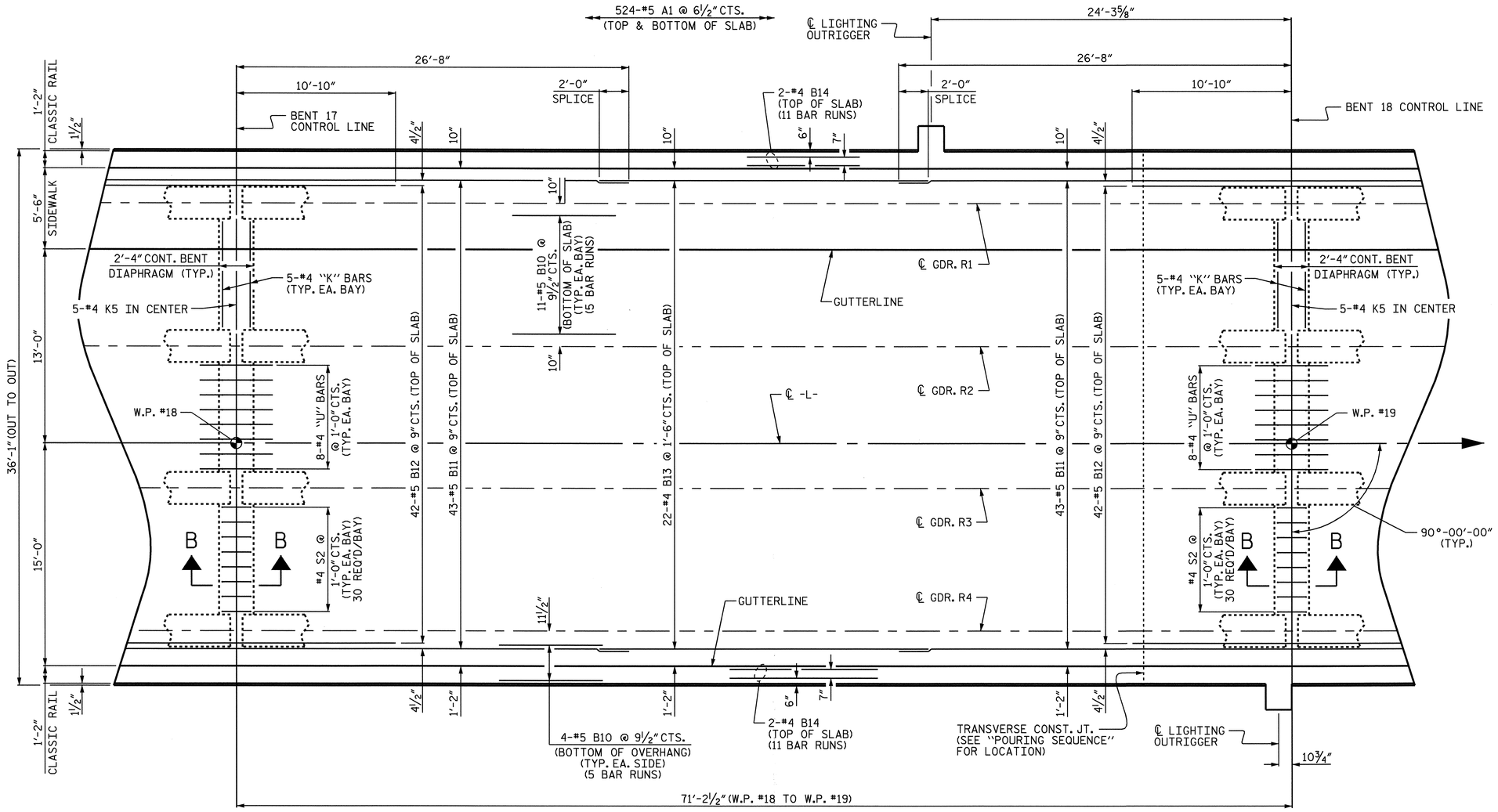

SPAN "R"

PROJECT NO. B-2532

CRAVEN COUNTY

STATION: 31+21.29 -L-

SHEET 17 OF 18

NOTES:

FOR SECTIONS, SEE "TYPICAL SECTIONS", SHEET 3 OF 5.

FOR CLASSIC CONCRETE BRIDGE RAIL REINFORCING STEEL AND DETAILS, SEE "CLASSIC CONCRETE BRIDGE RAIL" SHEETS.

FOR SIDEWALK REINFORCING STEEL AND DETAILS, SEE "SIDEWALK DETAILS" SHEETS.

NORTH CAROLINA PROFESSIONAL SEAL 21638 ENGINEER LAURA E. SUTTON
11/30/06

STATE OF NORTH CAROLINA
DEPARTMENT OF TRANSPORTATION
RALEIGH

SUPERSTRUCTURE

PLAN OF SPAN "R"

REVISIONS						SHEET NO.
NO.	BY:	DATE:	NO.	BY:	DATE:	S-32
1			3			TOTAL SHEETS
2			4			348

DRAWN BY : P.C. BREWER DATE : 7/26/06
CHECKED BY : A.S. CALLAWAY DATE : 9/18/06

24-OCT-2006 14:57
r:\Structures\pbrewer\Microstation\B2532_sd_PS_01.dgn
LSUTTON

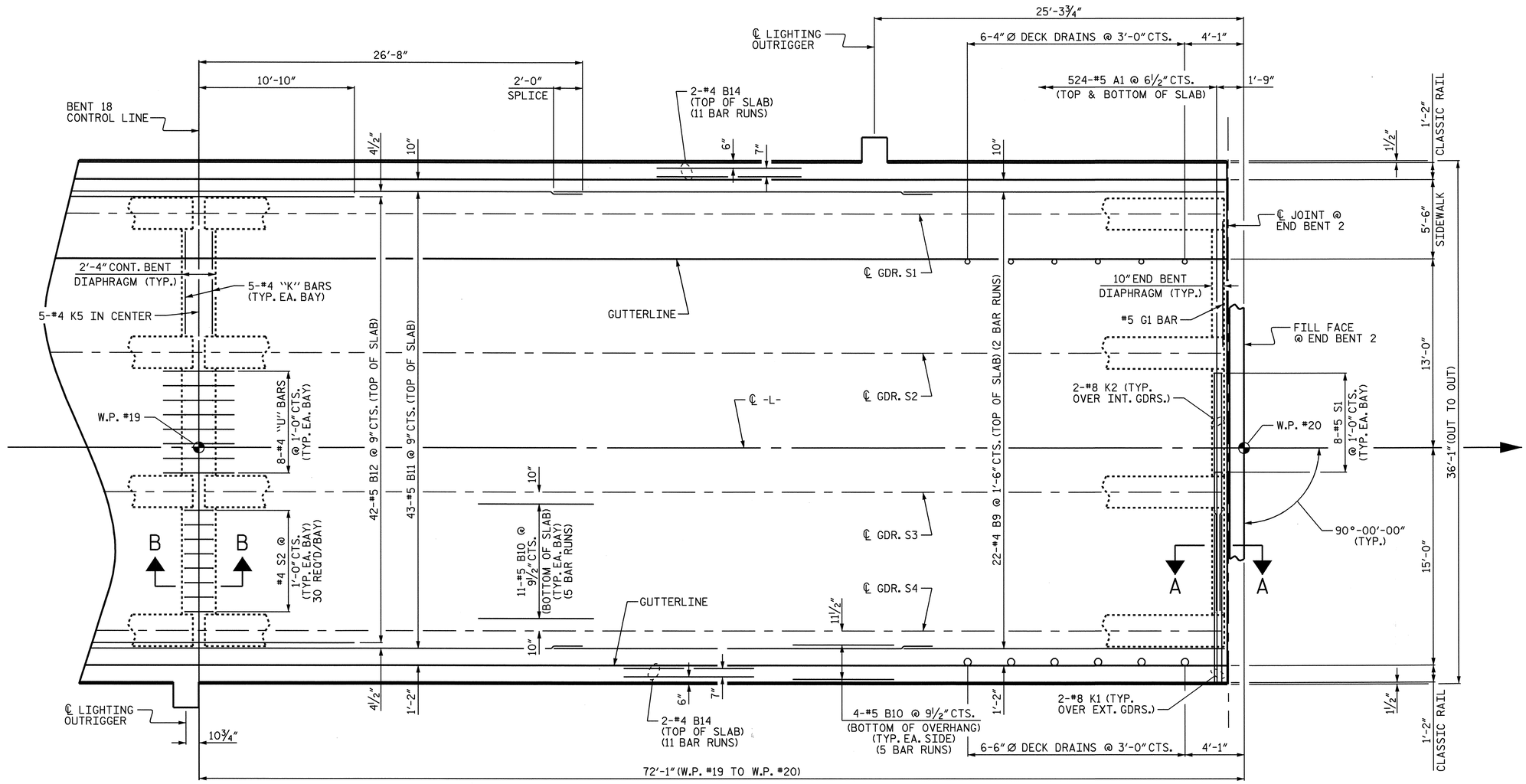

SPAN "S"

NOTES:

FOR SECTIONS, SEE "TYPICAL SECTIONS", SHEET 3 OF 5.

FOR CLASSIC CONCRETE BRIDGE RAIL REINFORCING STEEL AND DETAILS, SEE "CLASSIC CONCRETE BRIDGE RAIL" SHEETS.

FOR SIDEWALK REINFORCING STEEL AND DETAILS, SEE "SIDEWALK DETAILS" SHEETS.

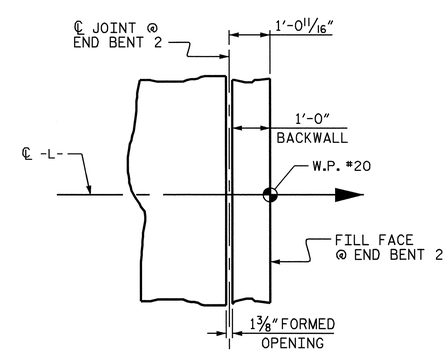

END BENT DETAIL

FOR JOINT DETAILS AT END BENT, SEE "BRIDGE APPROACH SLAB" SHEETS.

NORTH CAROLINA PROFESSIONAL SEAL 21638 ENGINEER LAURA E. SUTTON
11/30/06

PROJECT NO. B-2532
CRAVEN COUNTY
STATION: 31+21.29 -L-

SHEET 18 OF 18

STATE OF NORTH CAROLINA
DEPARTMENT OF TRANSPORTATION
RALEIGH

SUPERSTRUCTURE

PLAN OF SPAN "S"

REVISIONS						SHEET NO.
NO.	BY:	DATE:	NO.	BY:	DATE:	S-33
1			3			TOTAL SHEETS
2			4			348

DRAWN BY : P.C. BREWER DATE : 7/26/06
CHECKED BY : A.S. CALLAWAY DATE : 9/18/06

24-OCT-2006 14:57
r:\Structures\pbrewer\Microstation\B2532_sd_PS_01.dgn
LSUTTON

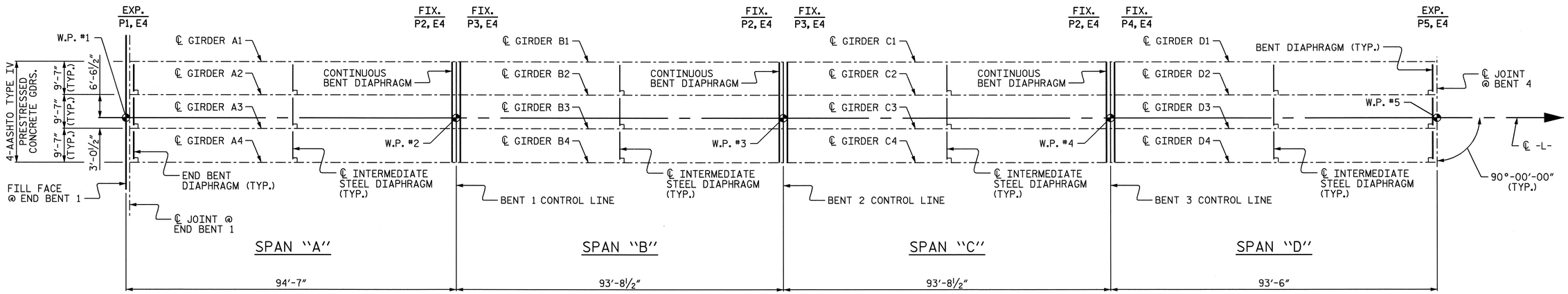

GIRDER LAYOUT SPANS "A" THROUGH "D"

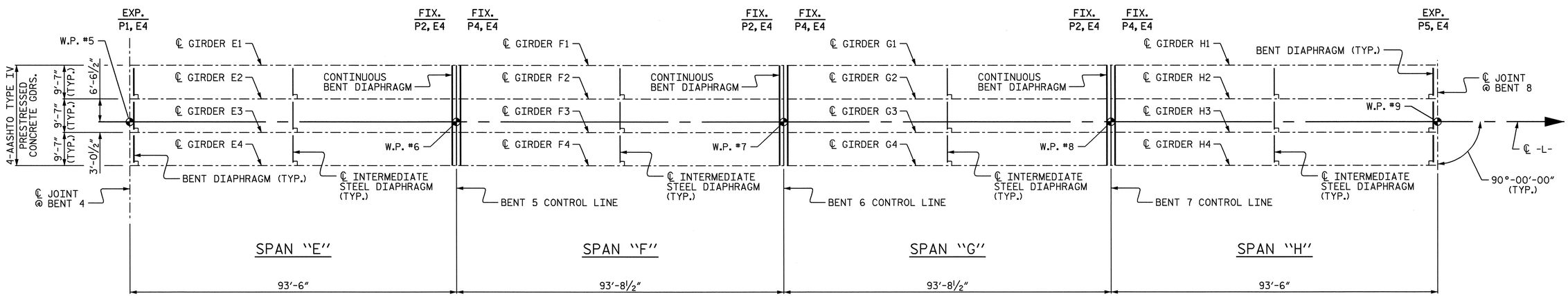

GIRDER LAYOUT SPANS "E" THROUGH "H"

PROJECT NO. B-2532

CRAVEN COUNTY

STATION: 31+21.29 -L-

SHEET 1 OF 2

STATE OF NORTH CAROLINA
DEPARTMENT OF TRANSPORTATION
RALEIGH

SUPERSTRUCTURE

GIRDER LAYOUT

NORTH CAROLINA PROFESSIONAL SEAL 21638 ENGINEER LAURA E. SUTTON
11/20/06

REVISIONS						SHEET NO.
NO.	BY:	DATE:	NO.	BY:	DATE:	3-34
1			3			TOTAL SHEETS
2			4			348

DRAWN BY : P.C. BREWER DATE : 7/26/06
CHECKED BY : A.S. CALLAWAY DATE : 9/14/06

30-NOV-2006 11:51
r:\Structures\pbrewer\Microstation\B2532_sd_FP_01.dgn
lsutton

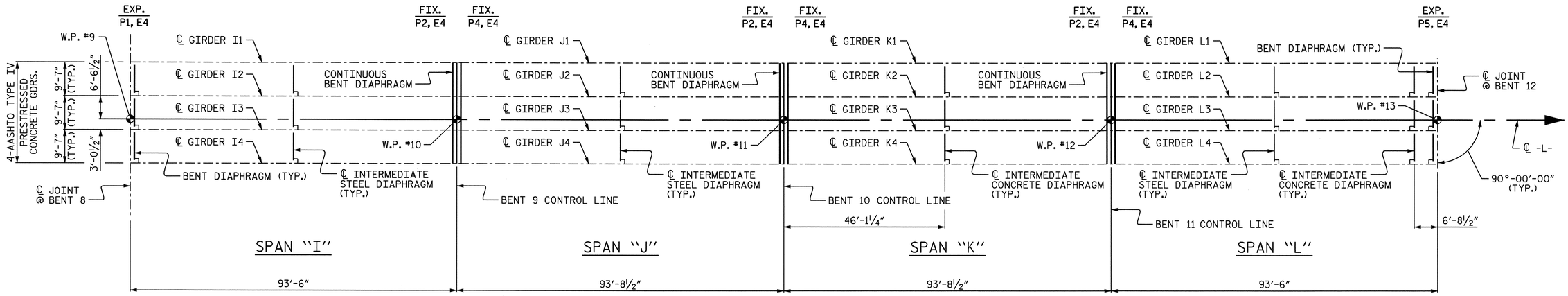

GIRDER LAYOUT SPANS "I" THROUGH "L"

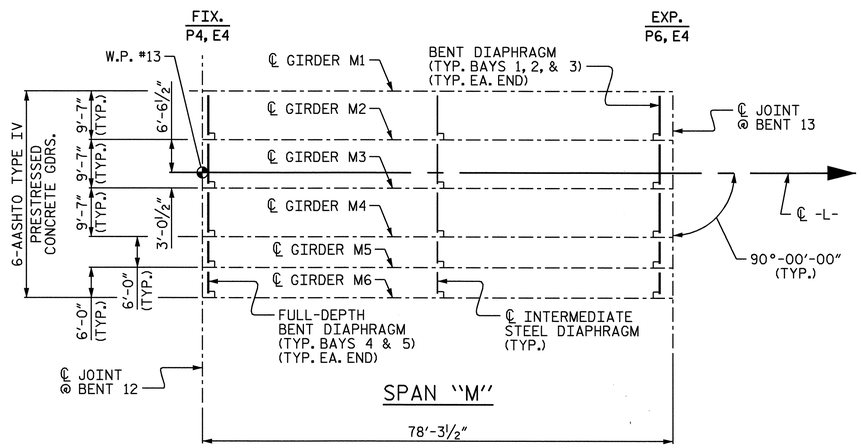

GIRDER LAYOUT SPAN "M"

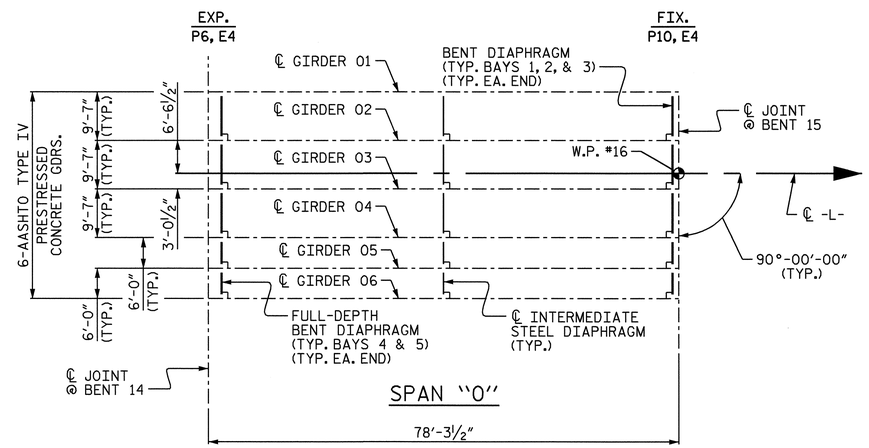

GIRDER LAYOUT SPAN "O"

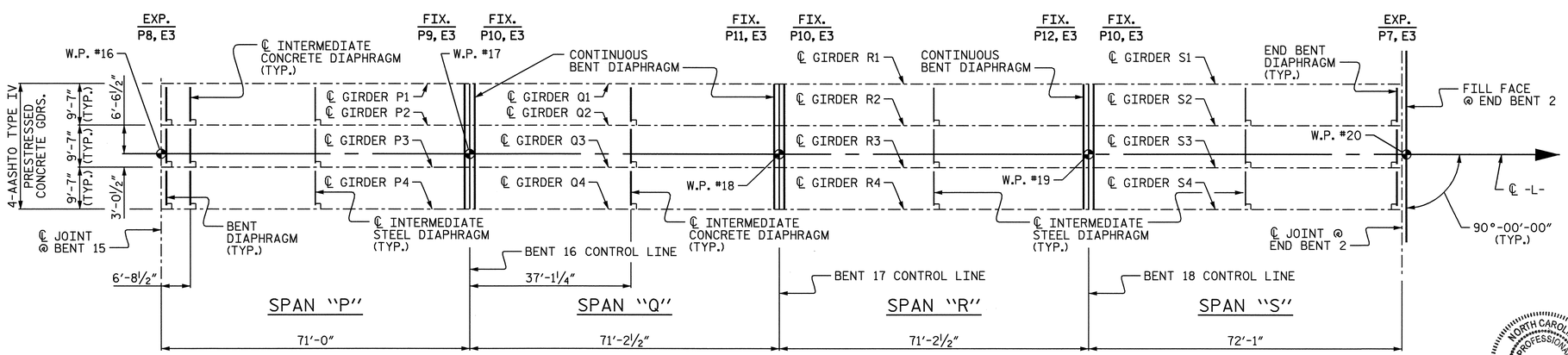

GIRDER LAYOUT SPANS "P" THROUGH "S"

PROJECT NO. B-2532
CRAVEN COUNTY
STATION: 31+21.29 -L-

SHEET 2 OF 2

STATE OF NORTH CAROLINA
DEPARTMENT OF TRANSPORTATION
RALEIGH

SUPERSTRUCTURE
GIRDER LAYOUT

NORTH CAROLINA PROFESSIONAL SEAL 21638 ENGINEER LAURA E. SUTTON
11/30/06

REVISIONS						SHEET NO.
NO.	BY:	DATE:	NO.	BY:	DATE:	S-35
1			3			TOTAL SHEETS
2			4			348

DRAWN BY : P.C. BREWER DATE : 7/26/06
CHECKED BY : A.S. CALLAWAY DATE : 9/14/06

30-NOV-2006 11:51
r:\Structures\pbrewer\Microstation\B2532_sd_FP_01.dgn
lsutton

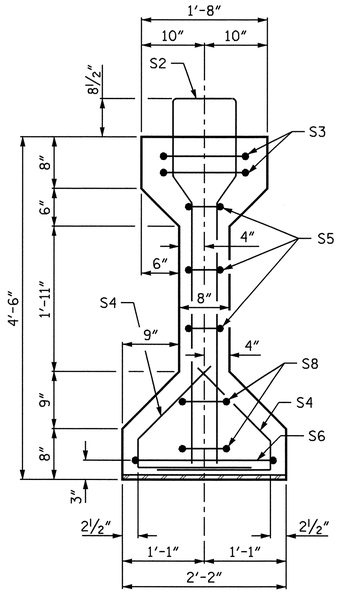

SECTION A-A

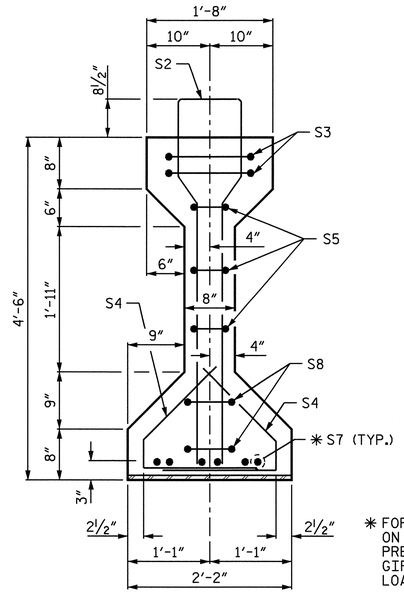

SECTION B-B

✱ FOR S7 BARS, SEE DETAIL "A" ON "AASHTO TYPE IV PRESTRESSED CONCRETE GIRDER CONTINUOUS FOR LIVE LOAD DETAILS" SHEET

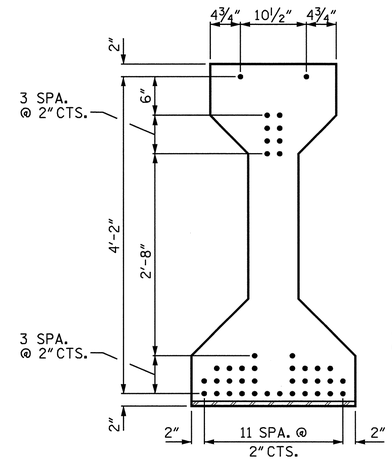

AT END OF GIRDER

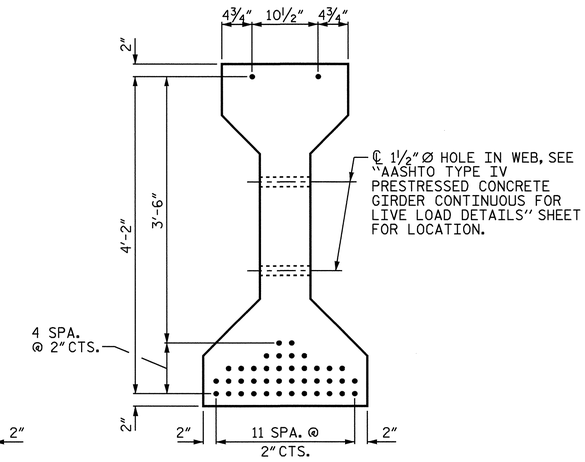

AT ℄ OF GIRDER

0.6"Ø LOW RELAXATION STRAND LAYOUT

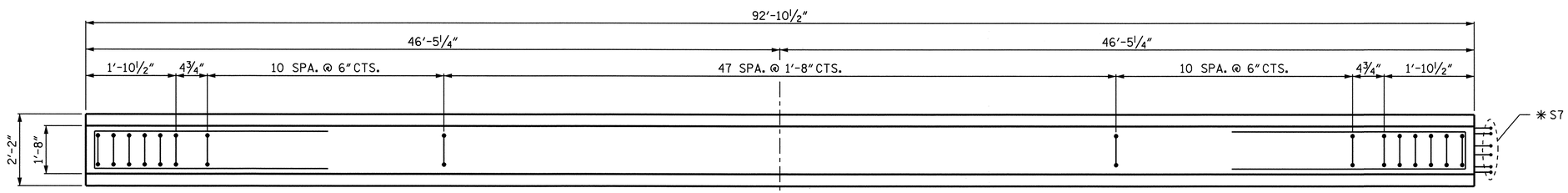

PLAN OF GIRDER

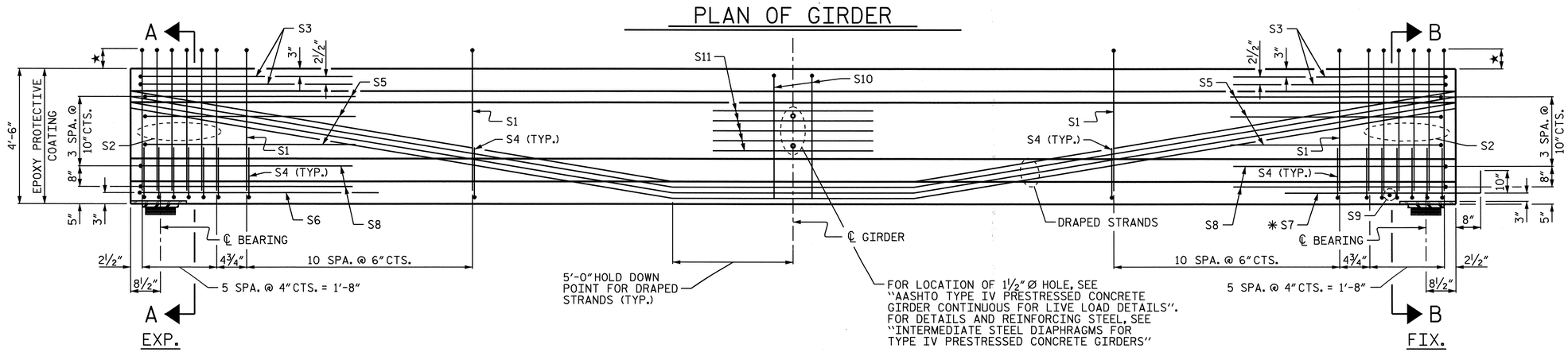

ELEVATION OF GIRDER

★ THE HEIGHT THAT THE S1 AND S2 BARS EXTEND ABOVE THE TOP OF THE GIRDER VARIES FROM 8½" AT THE END OF THE GIRDER TO 6" AT THE ℄ OF GIRDER.

THE UPLIFT FORCE DUE TO DRAPED STRANDS IS 25.4 KIPS.

NORTH CAROLINA PROFESSIONAL SEAL 21638 ENGINEER LAURA E. SUTTON 11/30/06

0.6"Ø L. R. GRADE 270 STRANDS

AREA (SQUARE INCHES)	ULTIMATE STRENGTH (LBS. PER STRAND)	APPLIED PRESTRESS (LBS. PER STRAND)
0.217	58,600	43,950

REINFORCING STEEL FOR ONE GIRDER

BAR	NUMBER	SIZE	TYPE	LENGTH	WEIGHT
S1	68	#4	1	10'-8"	485
S2	12	#6	1	11'-1"	200
S3	4	#4	2	9'-1"	24
S4	68	#4	3	3'-5"	155
S5	6	#4	2	8'-5"	34
S6	1	#4	2	9'-11"	7
✱ S7	6	#5	STR	3'-8"	23
S8	4	#4	2	8'-7"	23
S9	1	#3	STR	1'-10"	1
S10	2	#5	2	8'-8"	18
S11	5	#4	STR	7'-0"	23

✱ NOTE: S7 BARS SHALL BE BENT AFTER GIRDER FABRICATION AND BEFORE SHIPMENT. HEAT BENDING SHALL NOT BE ALLOWED.

BAR TYPES

ALL BAR DIMENSIONS ARE OUT TO OUT.

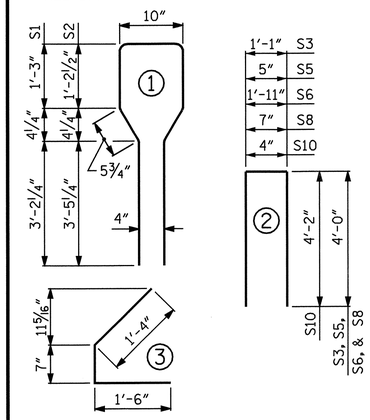

QUANTITIES FOR ONE GIRDER

	REINFORCING STEEL	9000 PSI CONCRETE	0.6"Ø L.R. STRANDS
	LB.	C.Y.	No.
	993	18.8	42

GIRDERS REQUIRED PER SPAN

NUMBER	LENGTH	TOTAL LENGTH
4	92'-10½"	371.50

PROJECT NO. B-2532

CRAVEN COUNTY

STATION: 31+21.29 -L-

SHEET 1 OF 16

STATE OF NORTH CAROLINA
DEPARTMENT OF TRANSPORTATION
RALEIGH

AASHTO TYPE IV PRESTRESSED CONCRETE GIRDER CONTINUOUS FOR LIVE LOAD SPANS "A", "E", & "I"

REVISIONS						SHEET NO.
NO.	BY:	DATE:	NO.	BY:	DATE:	8-36
1			3			TOTAL SHEETS
2			4			348

DRAWN BY : P.C. BREWER DATE : 7/26/06
CHECKED BY : A.S. CALLAWAY DATE : 9/14/06

24-OCT-2006 14:57
r:\Structures\pbrewer\Microstation\B2532_sd_G1_01.dgn
LSUTTON

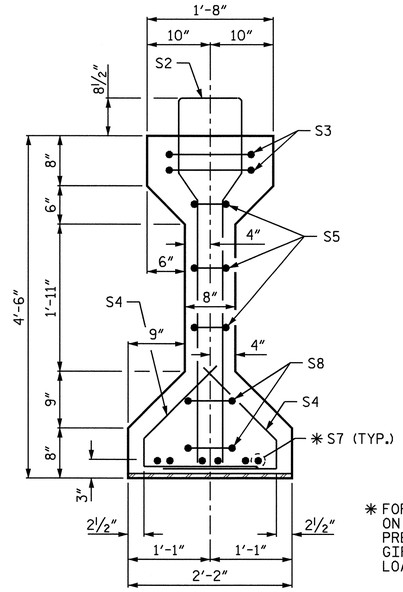

✱ FOR S7 BARS, SEE DETAIL "A" ON "AASHTO TYPE IV PRESTRESSED CONCRETE GIRDER CONTINUOUS FOR LIVE LOAD DETAILS" SHEET

SECTION B-B

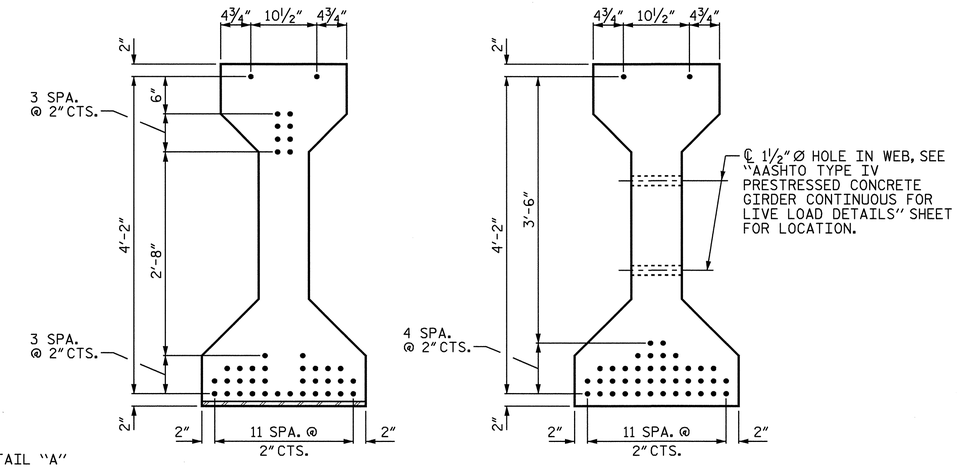

AT END OF GIRDER

AT ℄ OF GIRDER

0.6" Ø LOW RELAXATION STRAND LAYOUT

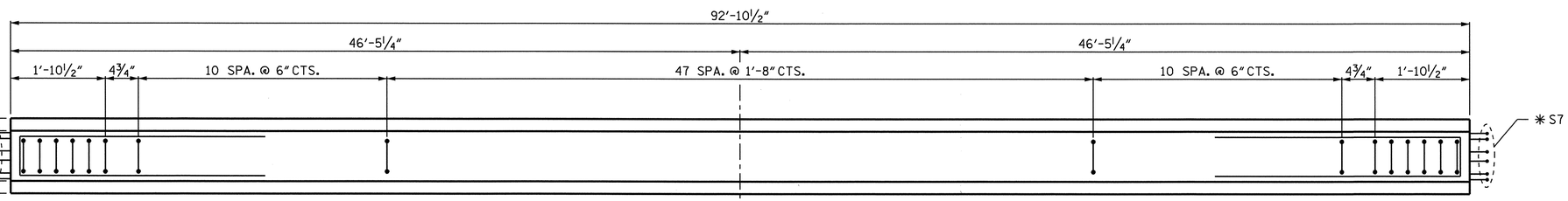

PLAN OF GIRDER

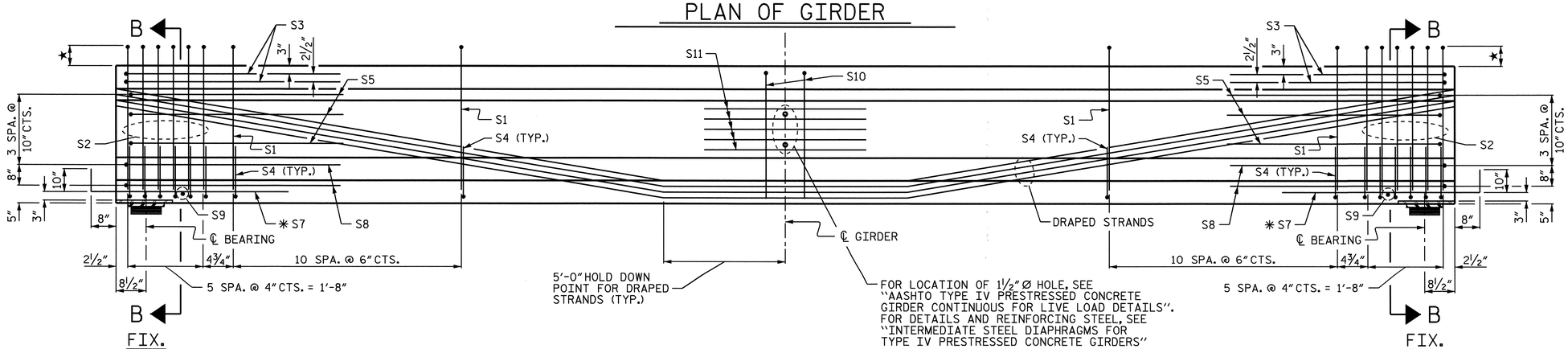

ELEVATION OF GIRDER

★ THE HEIGHT THAT THE S1 AND S2 BARS EXTEND ABOVE THE TOP OF THE GIRDER VARIES FROM 8½" AT THE END OF THE GIRDER TO 6" AT THE ℄ OF GIRDER.

THE UPLIFT FORCE DUE TO DRAPED STRANDS IS 25.4 KIPS.

0.6" Ø L. R. GRADE 270 STRANDS

AREA (SQUARE INCHES)	ULTIMATE STRENGTH (LBS. PER STRAND)	APPLIED PRESTRESS (LBS. PER STRAND)
0.217	58,600	43,950

REINFORCING STEEL FOR ONE GIRDER

BAR	NUMBER	SIZE	TYPE	LENGTH	WEIGHT
S1	68	#4	1	10'-8"	485
S2	12	#6	1	11'-1"	200
S3	4	#4	2	9'-1"	24
S4	68	#4	3	3'-5"	155
S5	6	#4	2	8'-5"	34
✱ S7	12	#5	STR	3'-8"	46
S8	4	#4	2	8'-7"	23
S9	2	#3	STR	1'-10"	1
S10	2	#5	2	8'-8"	18
S11	5	#4	STR	7'-0"	23

✱ NOTE: S7 BARS SHALL BE BENT AFTER GIRDER FABRICATION AND BEFORE SHIPMENT. HEAT BENDING SHALL NOT BE ALLOWED.

BAR TYPES

ALL BAR DIMENSIONS ARE OUT TO OUT.

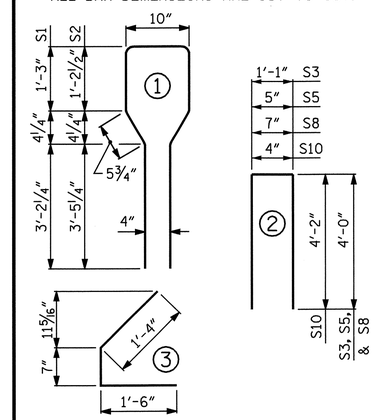

QUANTITIES FOR ONE GIRDER

	REINFORCING STEEL	9000 PSI CONCRETE	0.6" Ø L.R. STRANDS
	LB.	C.Y.	No.
	1,009	18.8	42

GIRDERS REQUIRED PER SPAN

NUMBER	LENGTH	TOTAL LENGTH
4	92'-10½"	371.50

PROJECT NO. B-2532

CRAVEN COUNTY

STATION: 31+21.29 -L-

SHEET 2 OF 16

STATE OF NORTH CAROLINA
DEPARTMENT OF TRANSPORTATION
RALEIGH

AASHTO TYPE IV PRESTRESSED CONCRETE GIRDER CONTINUOUS FOR LIVE LOAD SPANS "B", "C", "F", "G", & "J"

NORTH CAROLINA PROFESSIONAL SEAL 21638 ENGINEER LAURA E. SUTTON
11/30/06

REVISIONS						SHEET NO.
NO.	BY:	DATE:	NO.	BY:	DATE:	S-37
1			3			TOTAL SHEETS
2			4			348

DRAWN BY : P.C. BREWER DATE : 7/26/06
CHECKED BY : A.S. CALLAWAY DATE : 9/14/06

24-OCT-2006 14:56
r:\Structures\pbrewer\Microstation\B2532_sd_G1_01.dgn
LSUTTON

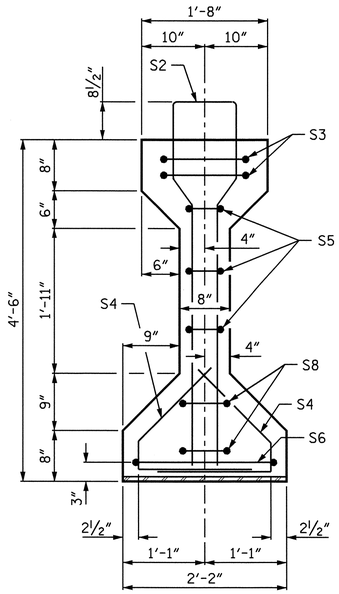

SECTION A-A

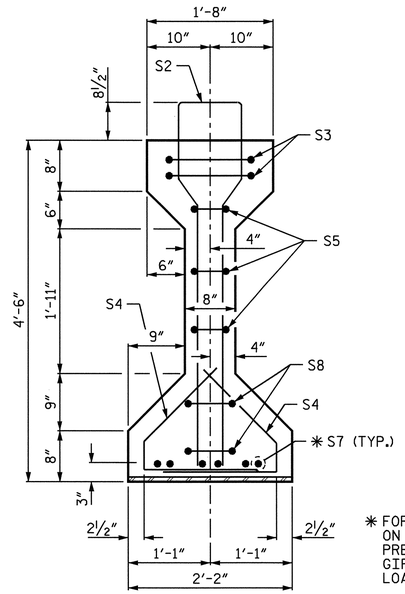

SECTION B-B

✱ FOR S7 BARS, SEE DETAIL "A" ON "AASHTO TYPE IV PRESTRESSED CONCRETE GIRDER CONTINUOUS FOR LIVE LOAD DETAILS" SHEET

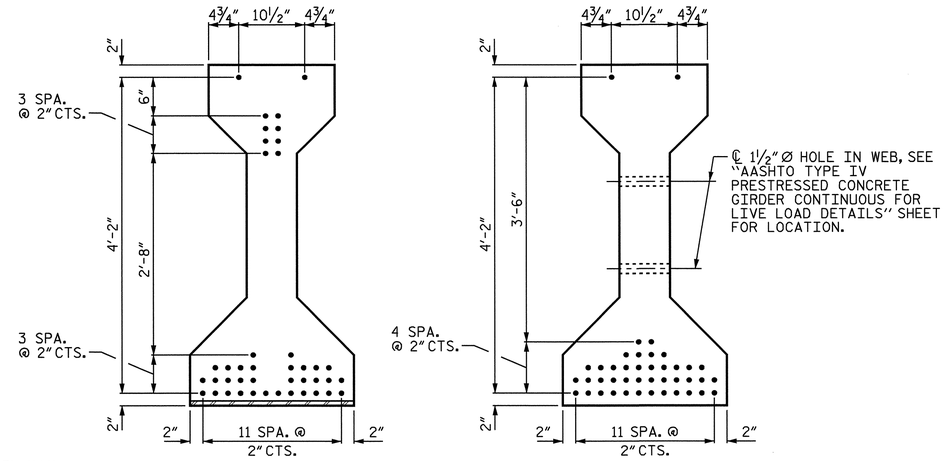

AT END OF GIRDER

AT ℄ OF GIRDER

0.6" Ø LOW RELAXATION STRAND LAYOUT

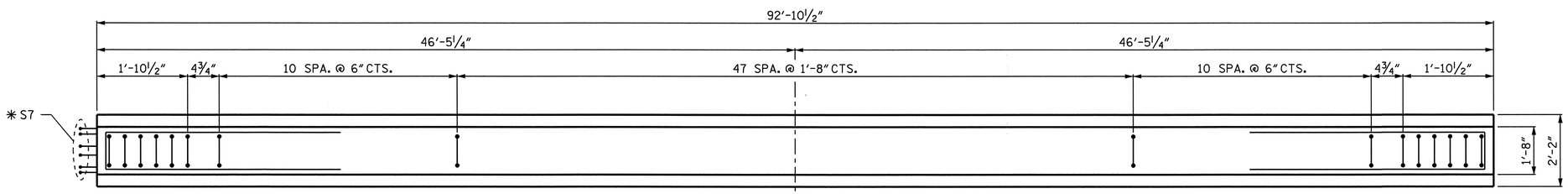

PLAN OF GIRDER

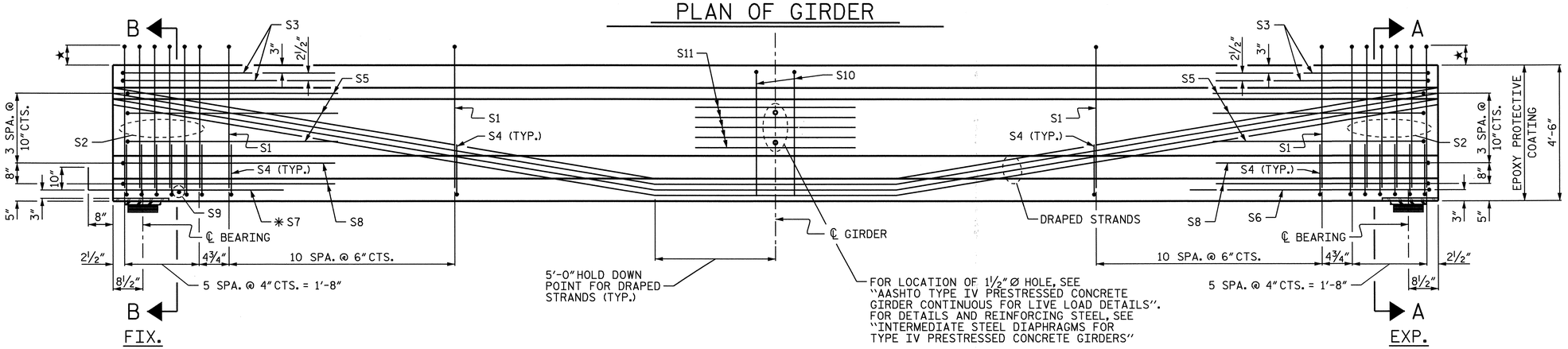

ELEVATION OF GIRDER

★ THE HEIGHT THAT THE S1 AND S2 BARS EXTEND ABOVE THE TOP OF THE GIRDER VARIES FROM 8½" AT THE END OF THE GIRDER TO 6" AT THE ℄ OF GIRDER.

THE UPLIFT FORCE DUE TO DRAPED STRANDS IS 25.4 KIPS.

0.6" Ø L. R. GRADE 270 STRANDS

AREA (SQUARE INCHES)	ULTIMATE STRENGTH (LBS. PER STRAND)	APPLIED PRESTRESS (LBS. PER STRAND)
0.217	58,600	43,950

REINFORCING STEEL FOR ONE GIRDER

BAR	NUMBER	SIZE	TYPE	LENGTH	WEIGHT
S1	68	#4	1	10'-8"	485
S2	12	#6	1	11'-1"	200
S3	4	#4	2	9'-1"	24
S4	68	#4	3	3'-5"	155
S5	6	#4	2	8'-5"	34
S6	1	#4	2	9'-11"	7
✱ S7	6	#5	STR	3'-8"	23
S8	4	#4	2	8'-7"	23
S9	1	#3	STR	1'-10"	1
S10	2	#5	2	8'-8"	18
S11	5	#4	STR	7'-0"	23

✱ NOTE: S7 BARS SHALL BE BENT AFTER GIRDER FABRICATION AND BEFORE SHIPMENT. HEAT BENDING SHALL NOT BE ALLOWED.

BAR TYPES

ALL BAR DIMENSIONS ARE OUT TO OUT.

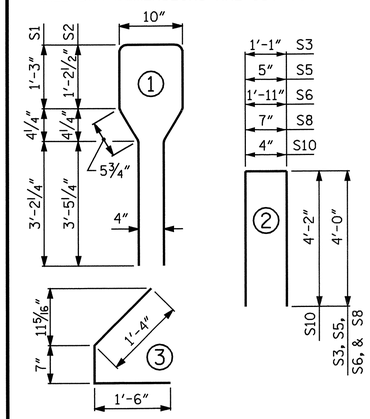

QUANTITIES FOR ONE GIRDER

	REINFORCING STEEL	9000 PSI CONCRETE	0.6" Ø L.R. STRANDS
	LB.	C.Y.	No.
	993	18.8	42

GIRDERS REQUIRED PER SPAN

NUMBER	LENGTH	TOTAL LENGTH
4	92'-10½"	371.50

PROJECT NO. B-2532

CRAVEN COUNTY

STATION: 31+21.29 -L-

SHEET 3 OF 16

STATE OF NORTH CAROLINA
DEPARTMENT OF TRANSPORTATION
RALEIGH

AASHTO TYPE IV PRESTRESSED CONCRETE GIRDER CONTINUOUS FOR LIVE LOAD SPANS "D" & "H"

NORTH CAROLINA PROFESSIONAL SEAL 21638 ENGINEER LAURA E. SUTTON
11/30/06

REVISIONS						SHEET NO.
NO.	BY:	DATE:	NO.	BY:	DATE:	S-38
1			3			TOTAL SHEETS
2			4			318

DRAWN BY : P.C. BREWER DATE : 7/26/06
CHECKED BY : A.S. CALLAWAY DATE : 9/14/06

24-OCT-2006 14:56
r:\Structures\pbrewer\Microstation\B2532_sd_G1_01.dgn
LSUTTON

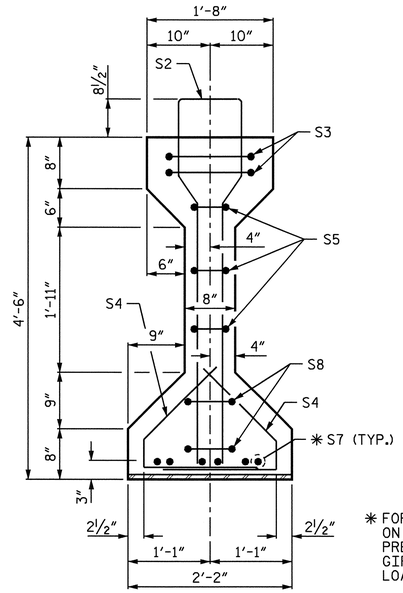

✱ FOR S7 BARS, SEE DETAIL "A" ON "AASHTO TYPE IV PRESTRESSED CONCRETE GIRDER CONTINUOUS FOR LIVE LOAD DETAILS" SHEET

SECTION B-B

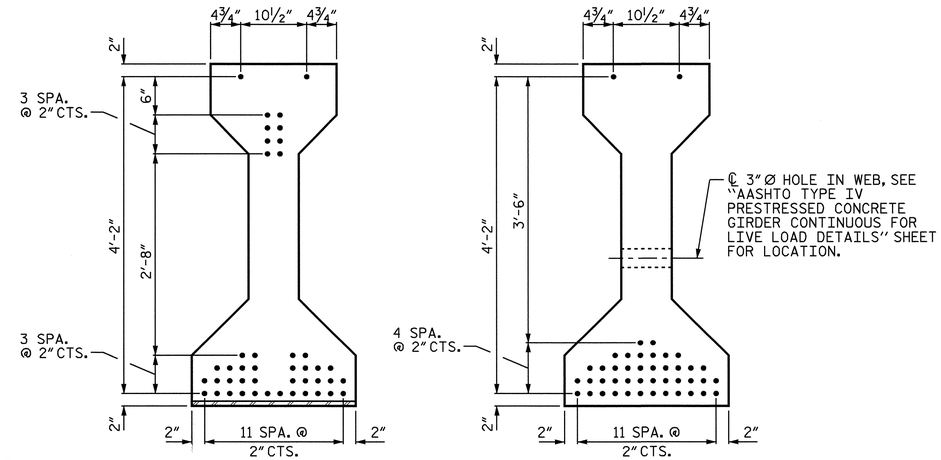

AT END OF GIRDER

AT ℄ OF GIRDER

0.6" Ø LOW RELAXATION STRAND LAYOUT

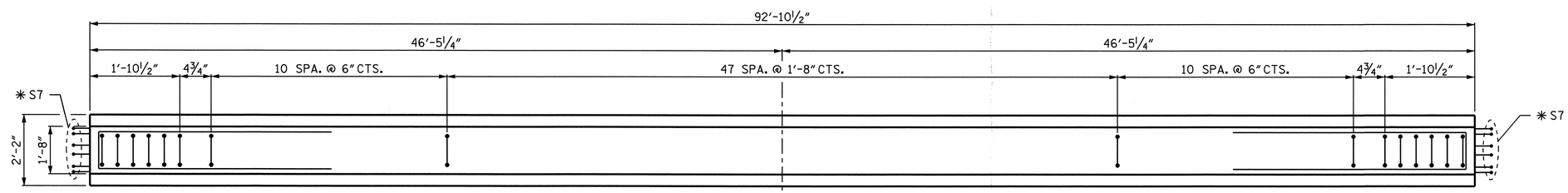

PLAN OF GIRDER

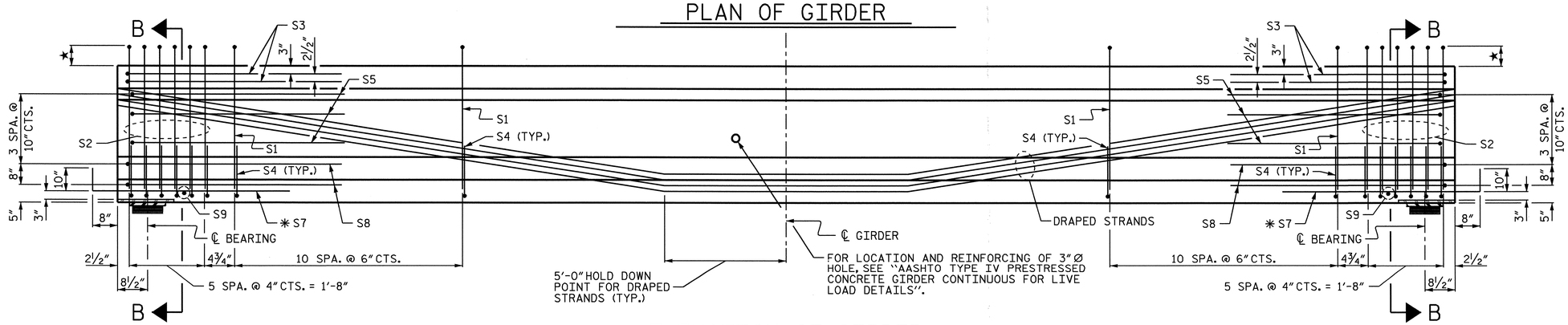

ELEVATION OF GIRDER

★ THE HEIGHT THAT THE S1 AND S2 BARS EXTEND ABOVE THE TOP OF THE GIRDER VARIES FROM 8½" AT THE END OF THE GIRDER TO 6" AT THE ℄ OF GIRDER.

THE UPLIFT FORCE DUE TO DRAPED STRANDS IS 25.4 KIPS.

0.6" Ø L. R. GRADE 270 STRANDS

AREA (SQUARE INCHES)	ULTIMATE STRENGTH (LBS. PER STRAND)	APPLIED PRESTRESS (LBS. PER STRAND)
0.217	58,600	43,950

REINFORCING STEEL FOR ONE GIRDER

BAR	NUMBER	SIZE	TYPE	LENGTH	WEIGHT
S1	68	#4	1	10'-8"	485
S2	12	#6	1	11'-1"	200
S3	4	#4	2	9'-1"	24
S4	68	#4	3	3'-5"	155
S5	6	#4	2	8'-5"	34
✱ S7	12	#5	STR	3'-8"	46
S8	4	#4	2	8'-7"	23
S9	2	#3	STR	1'-10"	1

✱ NOTE: S7 BARS SHALL BE BENT AFTER GIRDER FABRICATION AND BEFORE SHIPMENT. HEAT BENDING SHALL NOT BE ALLOWED.

BAR TYPES

ALL BAR DIMENSIONS ARE OUT TO OUT.

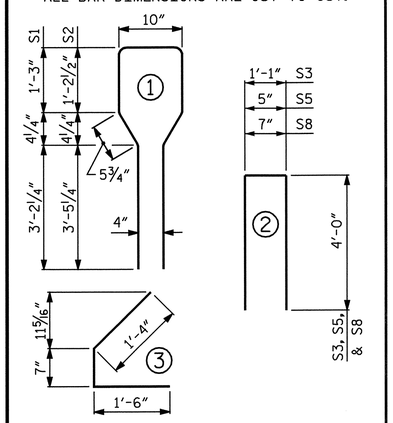

QUANTITIES FOR ONE GIRDER

	REINFORCING STEEL	9000 PSI CONCRETE	0.6" Ø L.R. STRANDS
	LB.	C.Y.	No.
	968	18.8	44

GIRDERS REQUIRED PER SPAN

NUMBER	LENGTH	TOTAL LENGTH
4	92'-10½"	371.50

PROJECT NO. B-2532

CRAVEN COUNTY

STATION: 31+21.29 -L-

SHEET 4 OF 16

STATE OF NORTH CAROLINA
DEPARTMENT OF TRANSPORTATION
RALEIGH

AASHTO TYPE IV PRESTRESSED CONCRETE GIRDER CONTINUOUS FOR LIVE LOAD SPAN "K"

NORTH CAROLINA PROFESSIONAL SEAL 21638 ENGINEER LAURA E. SUTTON
11/30/06

REVISIONS						SHEET NO.
NO.	BY:	DATE:	NO.	BY:	DATE:	S-39
1			3			TOTAL SHEETS
2			4			348

DRAWN BY : P.C. BREWER DATE : 7/26/06
CHECKED BY : A.S. CALLAWAY DATE : 9/14/06

24-OCT-2006 14:56
r:\Structures\pbrewer\Microstation\B2532_sd_G1_01.dgn
LSUTTON

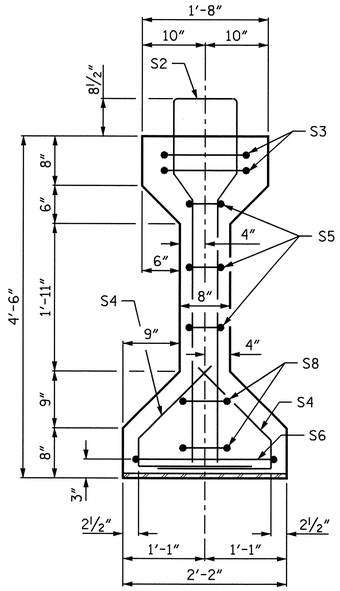

SECTION A-A

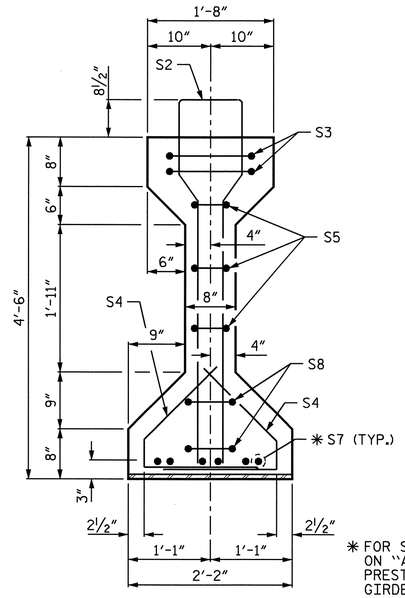

SECTION B-B

✱ FOR S7 BARS, SEE DETAIL "A" ON "AASHTO TYPE IV PRESTRESSED CONCRETE GIRDER CONTINUOUS FOR LIVE LOAD DETAILS" SHEET

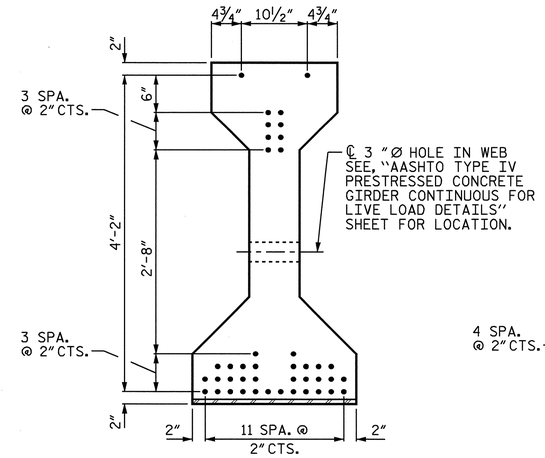

AT END OF GIRDER

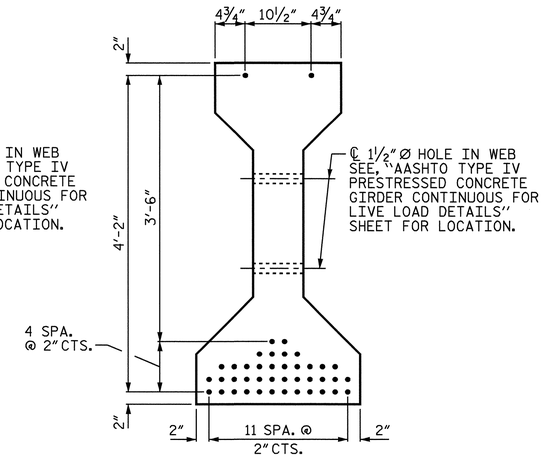

AT ℄ OF GIRDER

0.6"Ø LOW RELAXATION STRAND LAYOUT

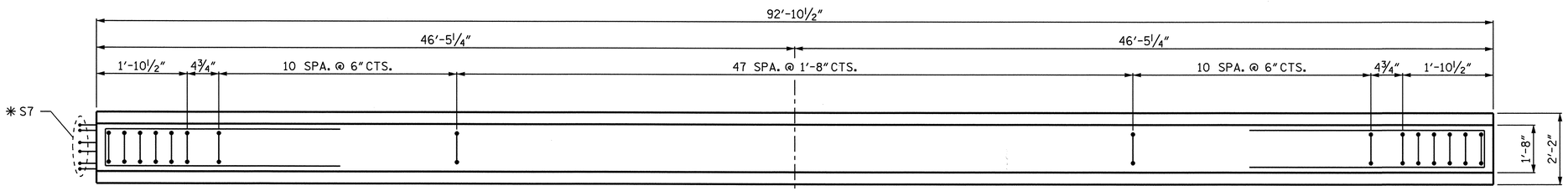

PLAN OF GIRDER

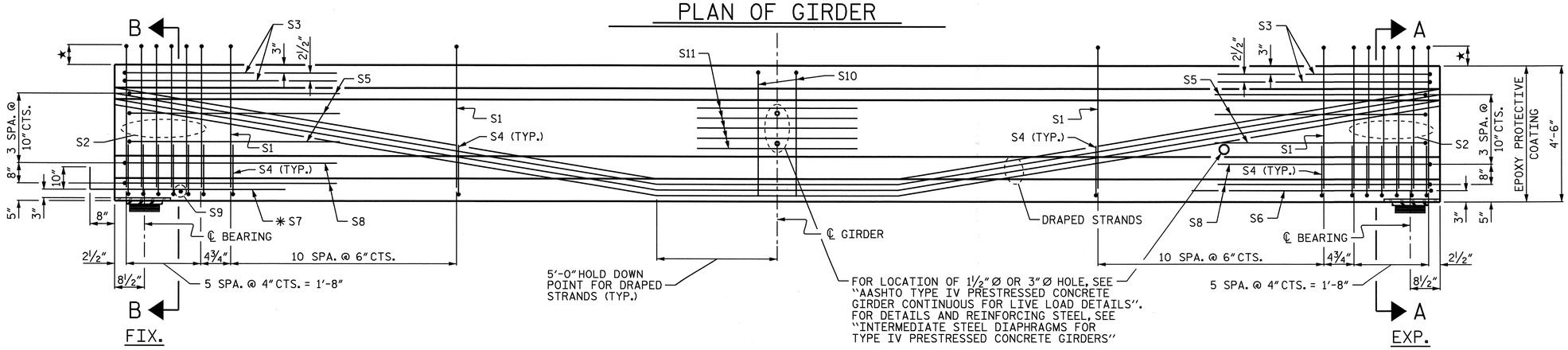

ELEVATION OF GIRDER

★ THE HEIGHT THAT THE S1 AND S2 BARS EXTEND ABOVE THE TOP OF THE GIRDER VARIES FROM 8½" AT THE END OF THE GIRDER TO 6" AT THE ℄ OF GIRDER.

THE UPLIFT FORCE DUE TO DRAPED STRANDS IS 25.4 KIPS.

0.6"Ø L. R. GRADE 270 STRANDS

AREA (SQUARE INCHES)	ULTIMATE STRENGTH (LBS. PER STRAND)	APPLIED PRESTRESS (LBS. PER STRAND)
0.217	58,600	43,950

REINFORCING STEEL FOR ONE GIRDER

BAR	NUMBER	SIZE	TYPE	LENGTH	WEIGHT
S1	68	#4	1	10'-8"	485
S2	12	#6	1	11'-1"	200
S3	4	#4	2	9'-1"	24
S4	68	#4	3	3'-5"	155
S5	6	#4	2	8'-5"	34
S6	1	#4	2	9'-11"	7
✱ S7	6	#5	STR	3'-8"	23
S8	4	#4	2	8'-7"	23
S9	1	#3	STR	1'-10"	1
S10	2	#5	2	8'-8"	18
S11	5	#4	STR	7'-0"	23

✱ NOTE: S7 BARS SHALL BE BENT AFTER GIRDER FABRICATION AND BEFORE SHIPMENT. HEAT BENDING SHALL NOT BE ALLOWED.

BAR TYPES

ALL BAR DIMENSIONS ARE OUT TO OUT.

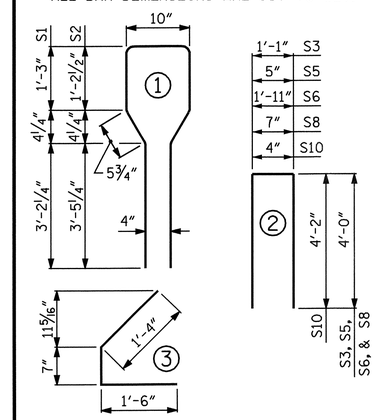

QUANTITIES FOR ONE GIRDER

	REINFORCING STEEL	9000 PSI CONCRETE	0.6"Ø L.R. STRANDS
	LB.	C.Y.	No.
	993	18.8	42

GIRDERS REQUIRED PER SPAN

NUMBER	LENGTH	TOTAL LENGTH
4	92'-10½"	371.50

PROJECT NO. B-2532

CRAVEN COUNTY

STATION: 31+21.29 -L-

SHEET 5 OF 16

STATE OF NORTH CAROLINA
DEPARTMENT OF TRANSPORTATION
RALEIGH

AASHTO TYPE IV PRESTRESSED CONCRETE GIRDER CONTINUOUS FOR LIVE LOAD SPAN "L"

NORTH CAROLINA PROFESSIONAL SEAL 21638 ENGINEER LAURA E. SUTTON
11/20/06

REVISIONS						SHEET NO.
NO.	BY:	DATE:	NO.	BY:	DATE:	S-40
1			3			TOTAL SHEETS
2			4			348

DRAWN BY : P.C. BREWER DATE : 7/26/06
CHECKED BY : A.S. CALLAWAY DATE : 9/14/06

24-OCT-2006 14:56
r:\Structures\pbrewer\Microstation\B2532_sd_G1_01.dgn
LSUTTON

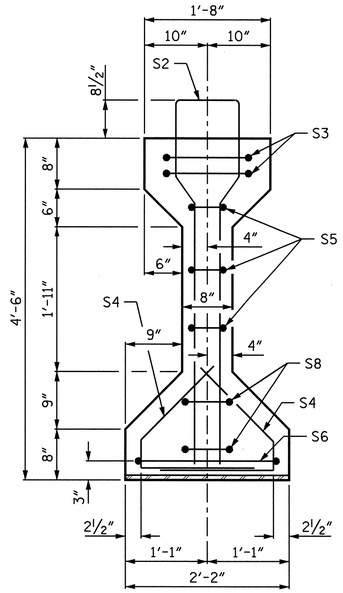

SECTION A-A

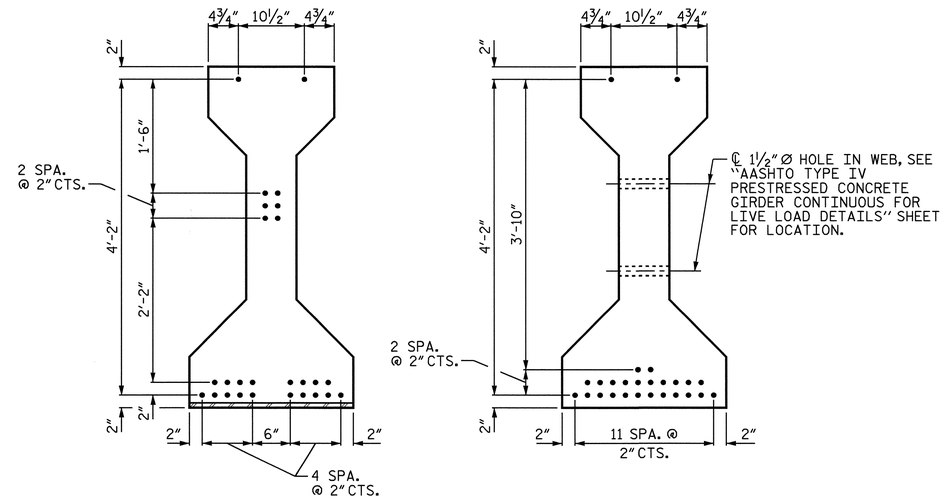

AT END OF GIRDER

AT ℄ OF GIRDER

0.6"Ø LOW RELAXATION STRAND LAYOUT

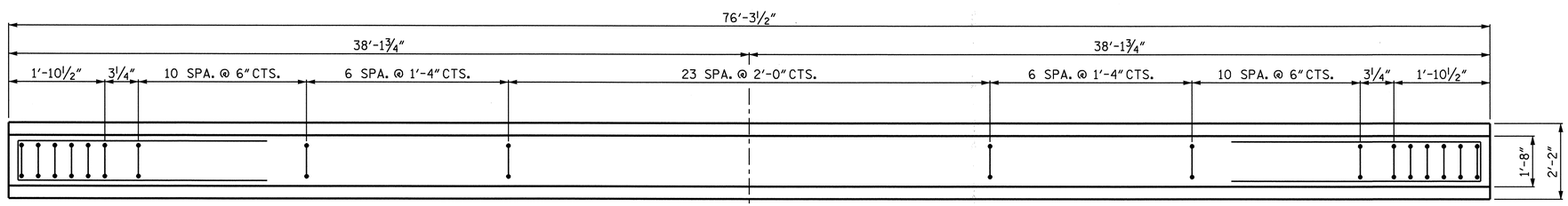

PLAN OF GIRDER

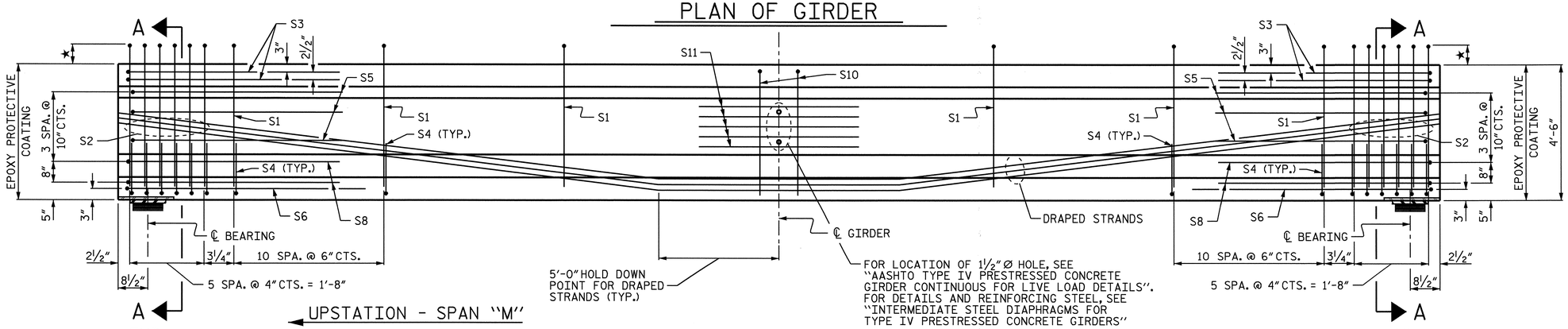

ELEVATION OF GIRDER

★ THE HEIGHT THAT THE S1 AND S2 BARS EXTEND ABOVE THE TOP OF THE GIRDER VARIES FROM 8½" AT THE END OF THE GIRDER TO 6" AT THE ℄ OF GIRDER.

0.6"Ø L. R. GRADE 270 STRANDS

AREA (SQUARE INCHES)	ULTIMATE STRENGTH (LBS. PER STRAND)	APPLIED PRESTRESS (LBS. PER STRAND)
0.217	58,600	43,950

REINFORCING STEEL FOR ONE GIRDER

BAR	NUMBER	SIZE	TYPE	LENGTH	WEIGHT
S1	56	#4	1	10'-8"	399
S2	12	#6	1	11'-1"	200
S3	4	#4	2	9'-1"	24
S4	68	#4	3	3'-5"	155
S5	6	#4	2	8'-5"	34
S6	2	#4	2	9'-11"	13
S8	4	#4	2	8'-7"	23
S10	2	#5	2	8'-8"	18
S11	5	#4	STR	7'-0"	23

BAR TYPES

ALL BAR DIMENSIONS ARE OUT TO OUT.

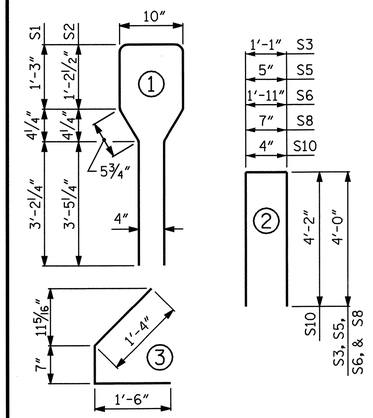

QUANTITIES FOR ONE GIRDER

	REINFORCING STEEL	6500 PSI CONCRETE	0.6"Ø L.R. STRANDS
	LB.	C.Y.	No.
	889	15.5	26

GIRDERS REQUIRED PER SPAN

NUMBER	LENGTH	TOTAL LENGTH
6	76'-3½"	457.75

PROJECT NO. B-2532

CRAVEN COUNTY

STATION: 31+21.29 -L-

SHEET 6 OF 16

STATE OF NORTH CAROLINA
DEPARTMENT OF TRANSPORTATION
RALEIGH

AASHTO TYPE IV PRESTRESSED CONCRETE GIRDER CONTINUOUS FOR LIVE LOAD SPANS "M" & "O"

NORTH CAROLINA PROFESSIONAL SEAL 21638 ENGINEER LAURA E. SUTTON
Laura E. Sutton 11/20/06

REVISIONS						SHEET NO.
NO.	BY:	DATE:	NO.	BY:	DATE:	S-41
1			3			TOTAL SHEETS
2			4			348

DRAWN BY : P.C. BREWER DATE : 7/26/06
CHECKED BY : A.S. CALLAWAY DATE : 9/14/06

24-OCT-2006 14:56
r:\Structures\pbrewer\Microstation\B2532_sd_G1_01.dgn
LSUTTON

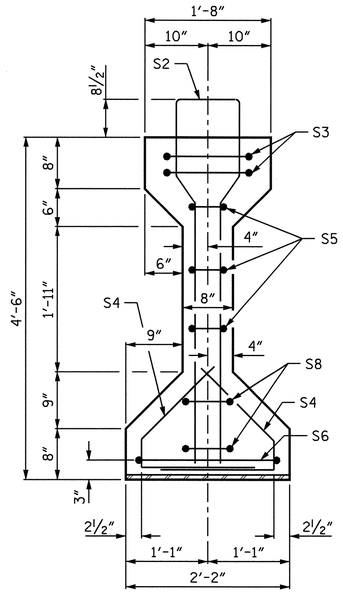

SECTION A-A

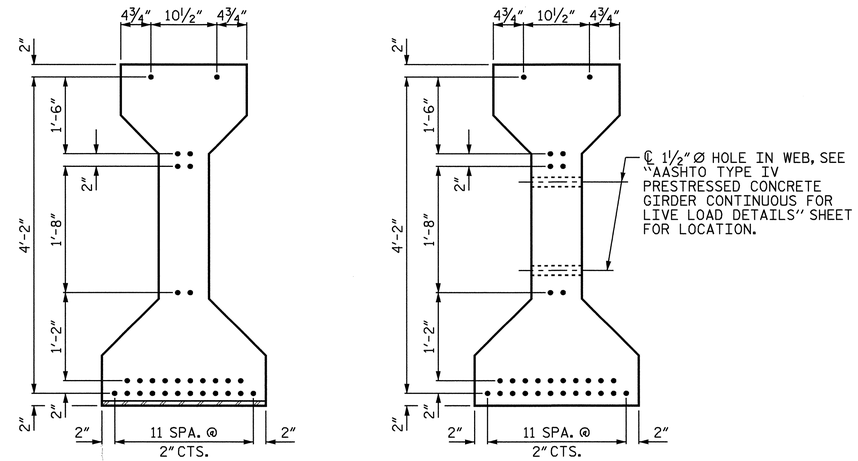

AT END OF GIRDER

AT ℄ OF GIRDER

0.6" Ø LOW RELAXATION STRAND LAYOUT

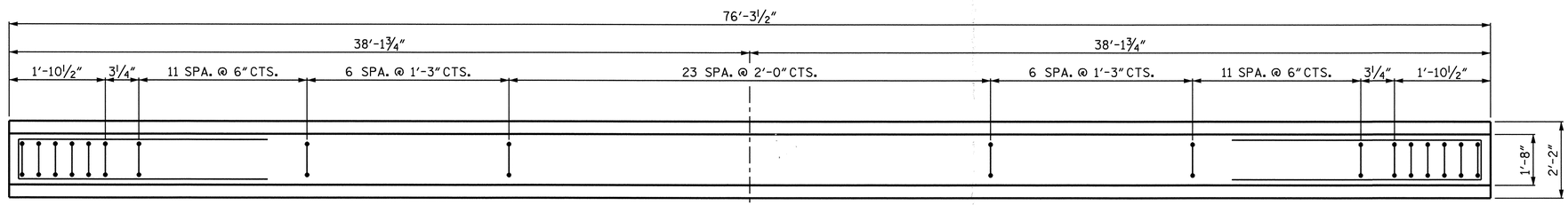

PLAN OF GIRDER

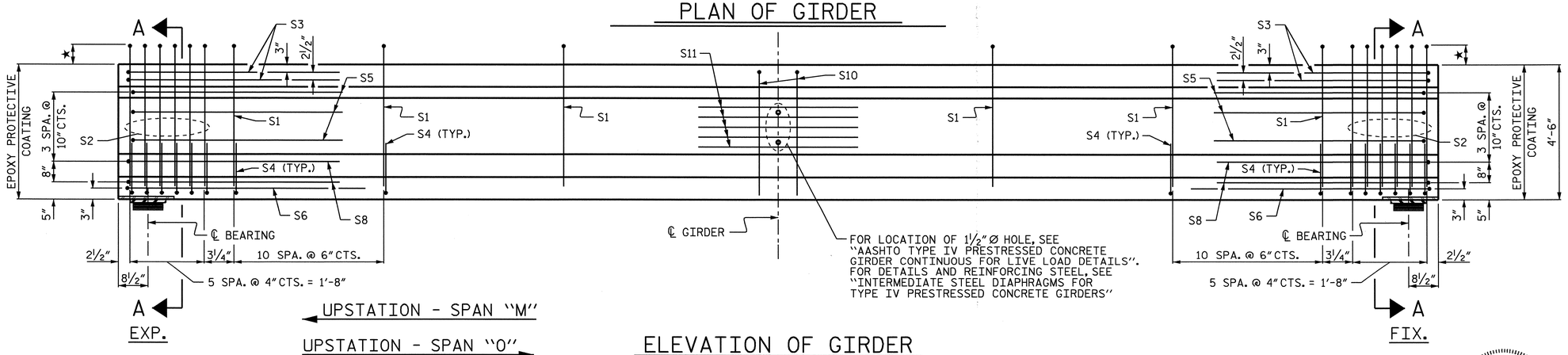

UPSTATION - SPAN "M"

UPSTATION - SPAN "O"

EXP.

FIX.

ELEVATION OF GIRDER

★ THE HEIGHT THAT THE S1 AND S2 BARS EXTEND ABOVE THE TOP OF THE GIRDER VARIES FROM 8½" AT THE END OF THE GIRDER TO 6" AT THE ℄ OF GIRDER.

0.6" Ø L. R. GRADE 270 STRANDS

AREA (SQUARE INCHES)	ULTIMATE STRENGTH (LBS. PER STRAND)	APPLIED PRESTRESS (LBS. PER STRAND)
0.217	58,600	43,950

REINFORCING STEEL FOR ONE GIRDER

BAR	NUMBER	SIZE	TYPE	LENGTH	WEIGHT
S1	58	#4	1	10'-8"	413
S2	12	#6	1	11'-1"	200
S3	4	#4	2	9'-1"	24
S4	72	#4	3	3'-5"	164
S5	6	#4	2	8'-5"	34
S6	2	#4	2	9'-11"	13
S8	4	#4	2	8'-7"	23
S10	2	#5	2	8'-8"	18
S11	5	#4	STR	7'-0"	23

BAR TYPES

ALL BAR DIMENSIONS ARE OUT TO OUT.

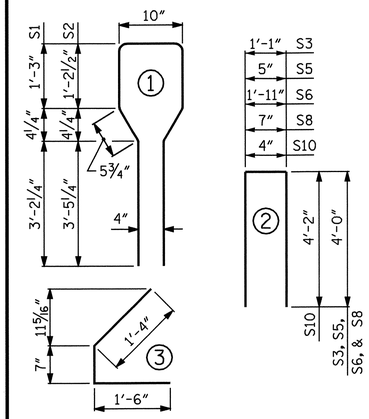

QUANTITIES FOR ONE GIRDER

	REINFORCING STEEL	7000 PSI CONCRETE	0.6" Ø L.R. STRANDS
	LB.	C.Y.	No.
	912	15.5	30

GIRDERS REQUIRED PER SPAN

NUMBER	LENGTH	TOTAL LENGTH
6	76'-3½"	457.75

PROJECT NO. B-2532

CRAVEN COUNTY

STATION: 31+21.29 -L-

SHEET 7 OF 16

STATE OF NORTH CAROLINA
DEPARTMENT OF TRANSPORTATION
RALEIGH

AASHTO TYPE IV PRESTRESSED CONCRETE GIRDER CONTINUOUS FOR LIVE LOAD SPANS "M" & "O" (STRAIGHT STRAND OPTION)

NORTH CAROLINA PROFESSIONAL SEAL 21638 ENGINEER LAURA E. SUTTON
11/30/06

REVISIONS							SHEET NO.
NO.	BY:	DATE:	NO.	BY:	DATE:		S-42
1			3				TOTAL SHEETS
2			4				348

DRAWN BY : P.C. BREWER DATE : 7/26/06
CHECKED BY : A.S. CALLAWAY DATE : 9/14/06

24-OCT-2006 14:56
r:\Structures\pbrewer\Microstation\B2532_sd_G1_01.dgn
LSUTTON

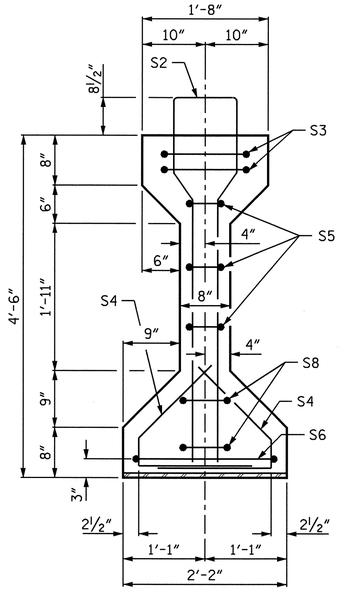

SECTION A-A

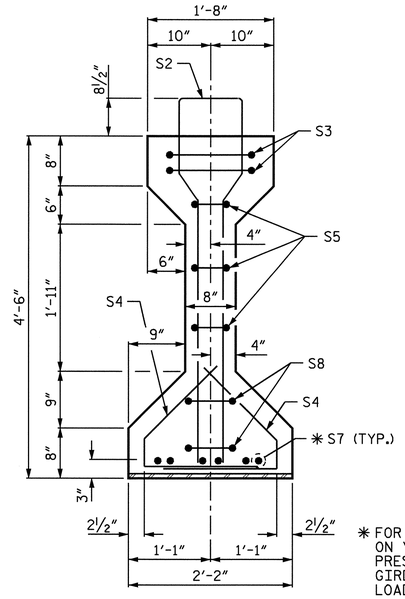

✱ FOR S7 BARS, SEE DETAIL "A" ON "AASHTO TYPE IV PRESTRESSED CONCRETE GIRDER CONTINUOUS FOR LIVE LOAD DETAILS" SHEET

SECTION B-B

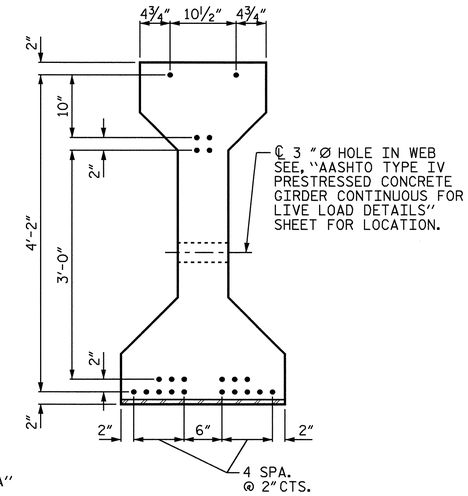

AT END OF GIRDER

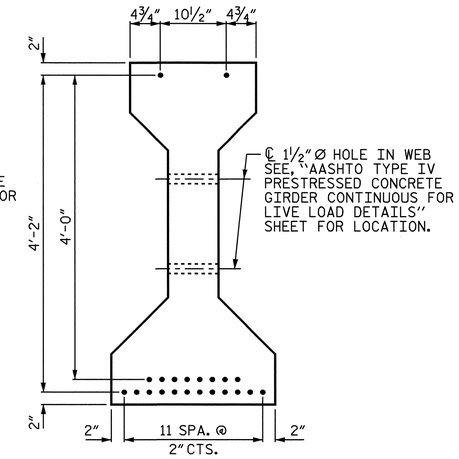

AT ℄ OF GIRDER

0.6"Ø LOW RELAXATION STRAND LAYOUT

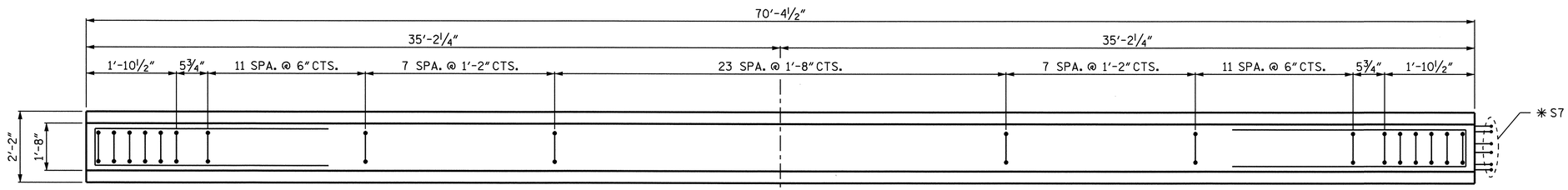

PLAN OF GIRDER

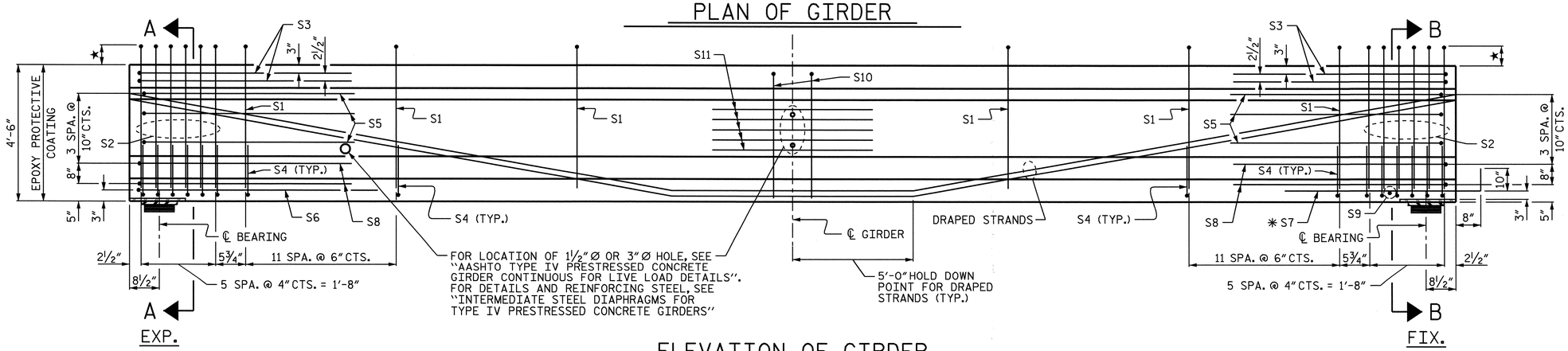

ELEVATION OF GIRDER

★ THE HEIGHT THAT THE S1 AND S2 BARS EXTEND ABOVE THE TOP OF THE GIRDER VARIES FROM 8½" AT THE END OF THE GIRDER TO 6" AT THE ℄ OF GIRDER.

0.6"Ø L. R. GRADE 270 STRANDS

AREA (SQUARE INCHES)	ULTIMATE STRENGTH (LBS. PER STRAND)	APPLIED PRESTRESS (LBS. PER STRAND)
0.217	58,600	43,950

REINFORCING STEEL FOR ONE GIRDER

BAR	NUMBER	SIZE	TYPE	LENGTH	WEIGHT
S1	60	#4	1	10'-8"	428
S2	12	#6	1	11'-1"	200
S3	4	#4	2	9'-1"	24
S4	72	#4	3	3'-5"	164
S5	6	#4	2	8'-5"	34
S6	1	#4	2	9'-11"	7
✱ S7	6	#5	STR	3'-8"	23
S8	4	#4	2	8'-7"	23
S9	1	#3	STR	1'-10"	1
S10	2	#5	2	8'-8"	18
S11	5	#4	STR	7'-0"	23

✱ NOTE: S7 BARS SHALL BE BENT AFTER GIRDER FABRICATION AND BEFORE SHIPMENT. HEAT BENDING SHALL NOT BE ALLOWED.

BAR TYPES

ALL BAR DIMENSIONS ARE OUT TO OUT.

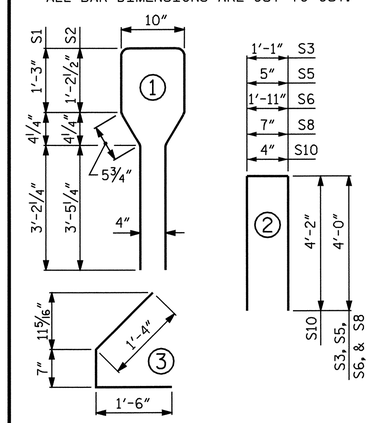

QUANTITIES FOR ONE GIRDER

	REINFORCING STEEL	5000 PSI CONCRETE	0.6"Ø L.R. STRANDS
	LB.	C.Y.	No.
	945	14.3	22

GIRDERS REQUIRED

NUMBER	LENGTH	TOTAL LENGTH
4	70'-4½"	281.50

PROJECT NO. B-2532

CRAVEN COUNTY

STATION: 31+21.29 -L-

SHEET 8 OF 16

STATE OF NORTH CAROLINA
DEPARTMENT OF TRANSPORTATION
RALEIGH

AASHTO TYPE IV PRESTRESSED CONCRETE GIRDER CONTINUOUS FOR LIVE LOAD SPAN "P"

NORTH CAROLINA PROFESSIONAL SEAL 21638 ENGINEER LAURA E. SUTTON
11/20/06

REVISIONS						SHEET NO.
NO.	BY:	DATE:	NO.	BY:	DATE:	S-43
1			3			TOTAL SHEETS
2			4			348

DRAWN BY : P.C. BREWER DATE : 7/26/06
CHECKED BY : A.S. CALLAWAY DATE : 9/14/06

24-OCT-2006 14:56
r:\Structures\pbrewer\Microstation\B2532_sd_G1_01.dgn
LSUTTON

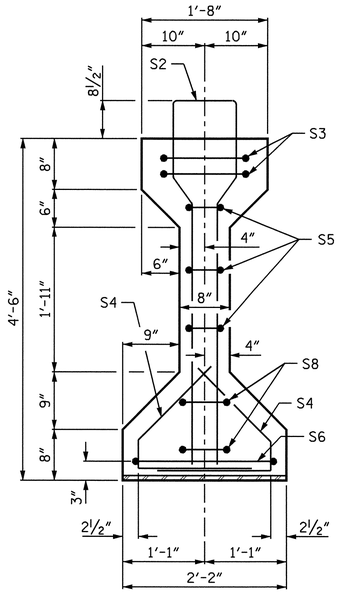

SECTION A-A

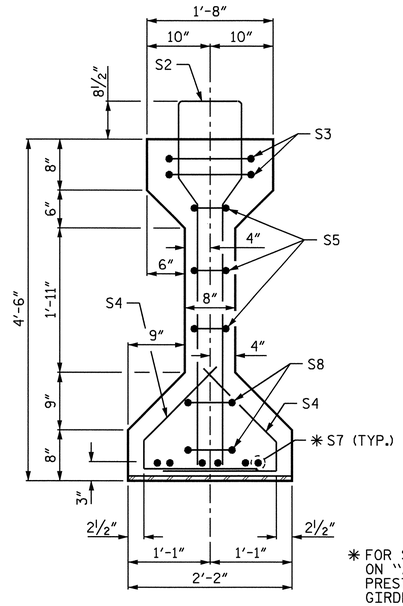

SECTION B-B

✱ FOR S7 BARS, SEE DETAIL "A" ON "AASHTO TYPE IV PRESTRESSED CONCRETE GIRDER CONTINUOUS FOR LIVE LOAD DETAILS" SHEET

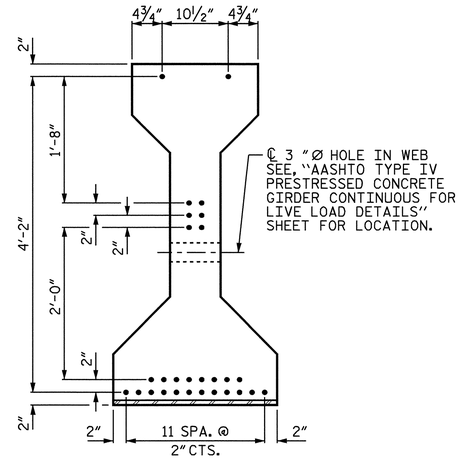

AT END OF GIRDER

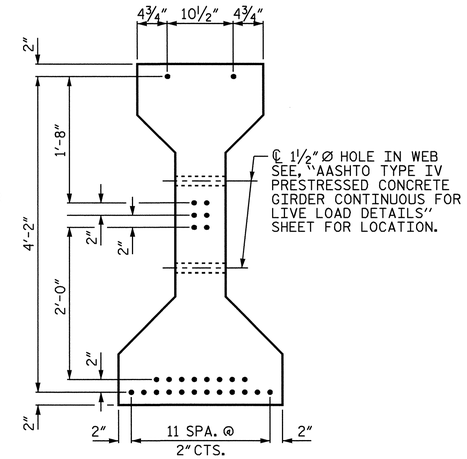

AT ℄ OF GIRDER

0.6"Ø LOW RELAXATION STRAND LAYOUT

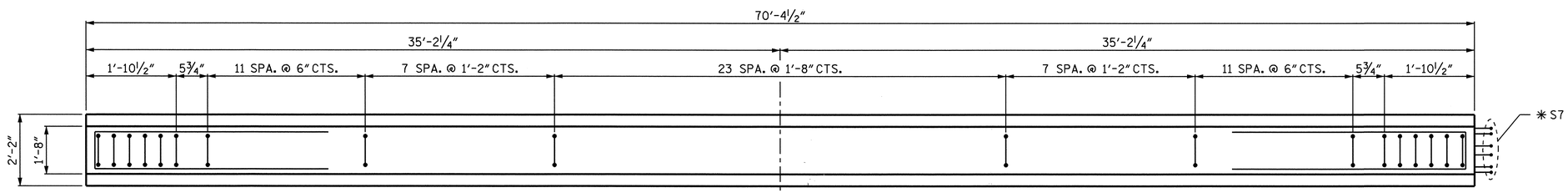

PLAN OF GIRDER

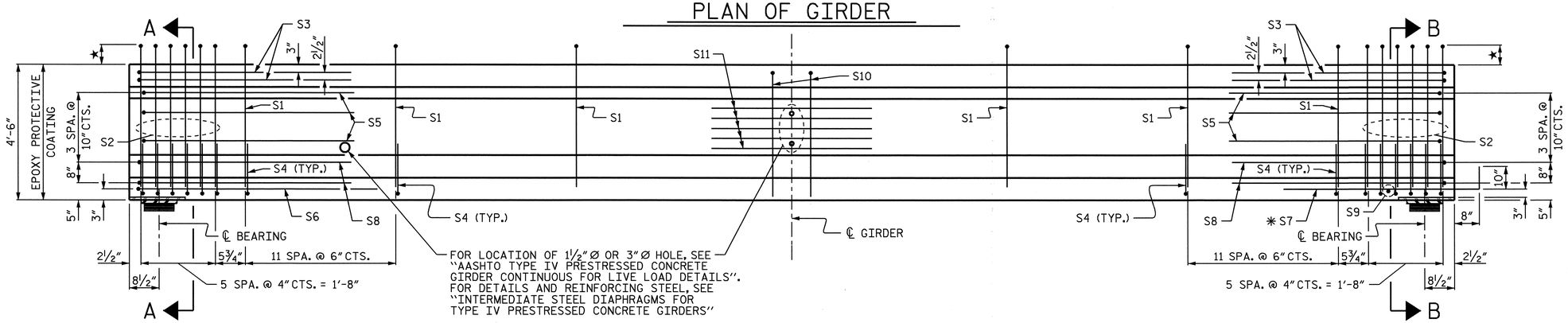

ELEVATION OF GIRDER

★ THE HEIGHT THAT THE S1 AND S2 BARS EXTEND ABOVE THE TOP OF THE GIRDER VARIES FROM 8½" AT THE END OF THE GIRDER TO 6" AT THE ℄ OF GIRDER.

0.6"Ø L. R. GRADE 270 STRANDS

AREA (SQUARE INCHES)	ULTIMATE STRENGTH (LBS. PER STRAND)	APPLIED PRESTRESS (LBS. PER STRAND)
0.217	58,600	43,950

REINFORCING STEEL FOR ONE GIRDER

BAR	NUMBER	SIZE	TYPE	LENGTH	WEIGHT
S1	60	#4	1	10'-8"	428
S2	12	#6	1	11'-1"	200
S3	4	#4	2	9'-1"	24
S4	72	#4	3	3'-5"	164
S5	6	#4	2	8'-5"	34
S6	1	#4	2	9'-11"	7
✱ S7	6	#5	STR	3'-8"	23
S8	4	#4	2	8'-7"	23
S9	1	#3	STR	1'-10"	1
S10	2	#5	2	8'-8"	18
S11	5	#4	STR	7'-0"	23

✱ NOTE: S7 BARS SHALL BE BENT AFTER GIRDER FABRICATION AND BEFORE SHIPMENT. HEAT BENDING SHALL NOT BE ALLOWED.

BAR TYPES

ALL BAR DIMENSIONS ARE OUT TO OUT.

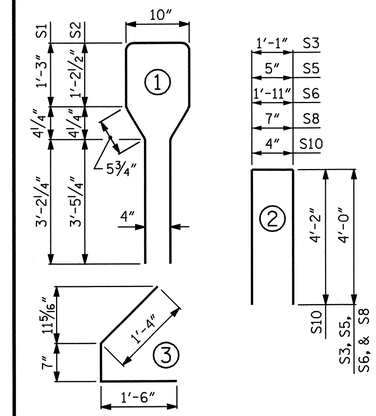

QUANTITIES FOR ONE GIRDER

	REINFORCING STEEL	6500 PSI CONCRETE	0.6"Ø L.R. STRANDS
	LB.	C.Y.	No.
	945	14.3	28

GIRDERS REQUIRED

NUMBER	LENGTH	TOTAL LENGTH
4	70'-4½"	281.50

PROJECT NO. B-2532

CRAVEN COUNTY

STATION: 31+21.29 -L-

SHEET 9 OF 16

STATE OF NORTH CAROLINA
DEPARTMENT OF TRANSPORTATION
RALEIGH

AASHTO TYPE IV PRESTRESSED CONCRETE GIRDER CONTINUOUS FOR LIVE LOAD SPAN "P" (STRAIGHT STRAND OPTION)

NORTH CAROLINA PROFESSIONAL SEAL 21638 ENGINEER LAURA E. SUTTON
11/20/06

REVISIONS						SHEET NO.
NO.	BY:	DATE:	NO.	BY:	DATE:	S-44
1			3			TOTAL SHEETS
2			4			348

DRAWN BY : P.C. BREWER DATE : 7/26/06
CHECKED BY : A.S. CALLAWAY DATE : 9/14/06

24-OCT-2006 14:56
r:\Structures\pbrewer\Microstation\B2532_sd_G1_01.dgn
LSUTTON

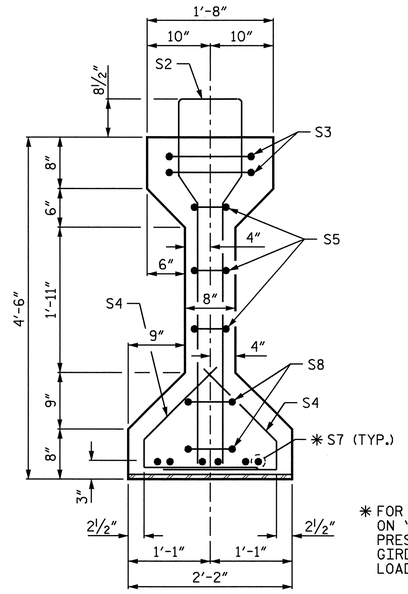

✱ FOR S7 BARS, SEE DETAIL "A" ON "AASHTO TYPE IV PRESTRESSED CONCRETE GIRDER CONTINUOUS FOR LIVE LOAD DETAILS" SHEET

SECTION B-B

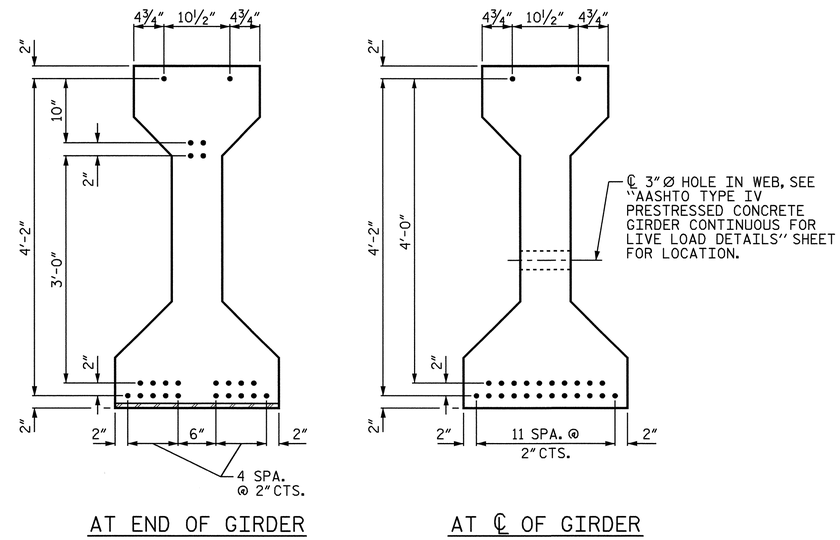

AT END OF GIRDER

AT ℄ OF GIRDER

0.6" Ø LOW RELAXATION STRAND LAYOUT

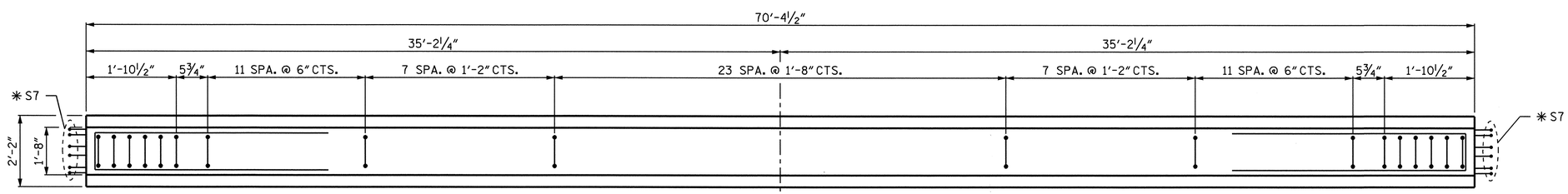

PLAN OF GIRDER

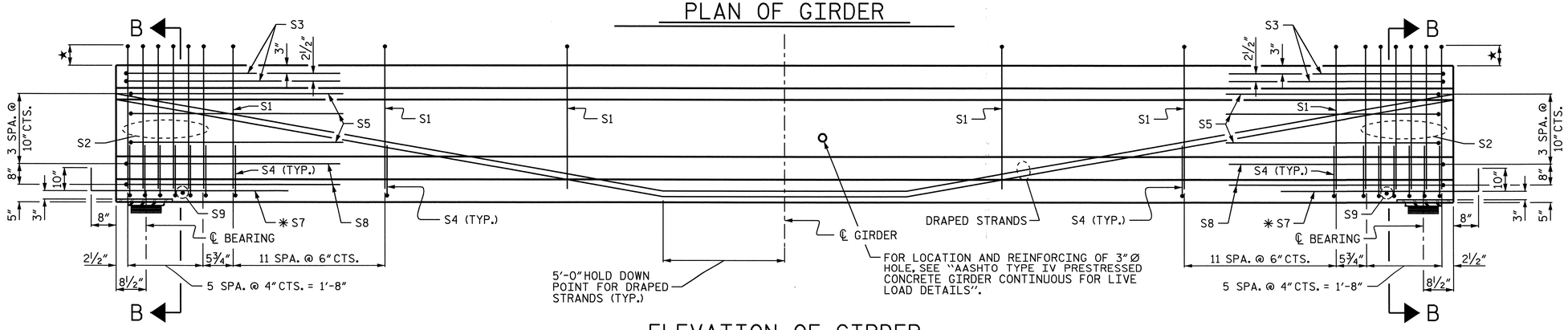

ELEVATION OF GIRDER

★ THE HEIGHT THAT THE S1 AND S2 BARS EXTEND ABOVE THE TOP OF THE GIRDER VARIES FROM 8½" AT THE END OF THE GIRDER TO 6" AT THE ℄ OF GIRDER.

0.6" Ø L. R. GRADE 270 STRANDS

AREA (SQUARE INCHES)	ULTIMATE STRENGTH (LBS. PER STRAND)	APPLIED PRESTRESS (LBS. PER STRAND)
0.217	58,600	43,950

REINFORCING STEEL FOR ONE GIRDER

BAR	NUMBER	SIZE	TYPE	LENGTH	WEIGHT
S1	60	#4	1	10'-8"	428
S2	12	#6	1	11'-1"	200
S3	4	#4	2	9'-1"	24
S4	72	#4	3	3'-5"	164
S5	6	#4	2	8'-5"	34
✱ S7	12	#5	STR	3'-8"	46
S8	4	#4	2	8'-7"	23
S9	2	#3	STR	1'-10"	1

✱ NOTE: S7 BARS SHALL BE BENT AFTER GIRDER FABRICATION AND BEFORE SHIPMENT. HEAT BENDING SHALL NOT BE ALLOWED.

BAR TYPES

ALL BAR DIMENSIONS ARE OUT TO OUT.

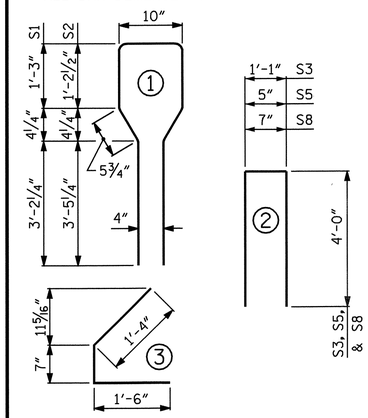

QUANTITIES FOR ONE GIRDER

	REINFORCING STEEL	5000 PSI CONCRETE	0.6" Ø L.R. STRANDS
	LB.	C.Y.	No.
	920	14.3	24

GIRDERS REQUIRED PER SPAN

NUMBER	LENGTH	TOTAL LENGTH
4	70'-4½"	281.50

PROJECT NO. B-2532

CRAVEN COUNTY

STATION: 31+21.29 -L-

SHEET 10 OF 16

STATE OF NORTH CAROLINA
DEPARTMENT OF TRANSPORTATION
RALEIGH

AASHTO TYPE IV PRESTRESSED CONCRETE GIRDER CONTINUOUS FOR LIVE LOAD SPAN "Q"

NORTH CAROLINA PROFESSIONAL SEAL 21638 ENGINEER LAURA E. SUTTON
11/30/06

REVISIONS						SHEET NO.
NO.	BY:	DATE:	NO.	BY:	DATE:	S-45
1			3			TOTAL SHEETS
2			4			348

DRAWN BY : P.C. BREWER DATE : 7/26/06
CHECKED BY : A.S. CALLAWAY DATE : 9/14/06

24-OCT-2006 14:56
r:\Structures\pbrewer\Microstation\B2532_sd_G1_01.dgn
LSUTTON

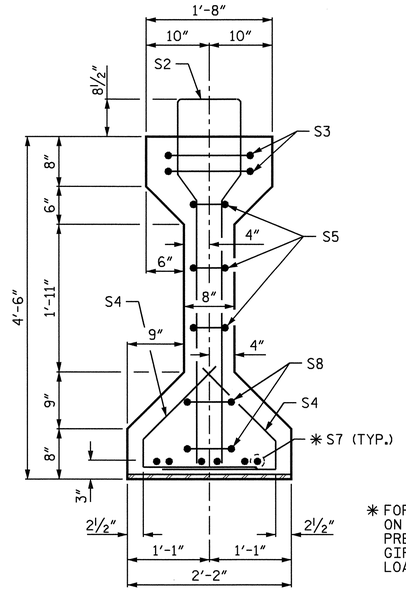

* FOR S7 BARS, SEE DETAIL "A" ON "AASHTO TYPE IV PRESTRESSED CONCRETE GIRDER CONTINUOUS FOR LIVE LOAD DETAILS" SHEET

SECTION B-B

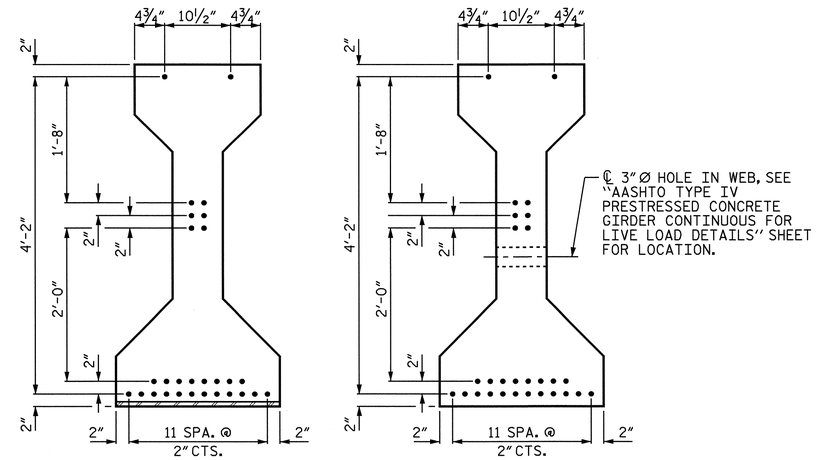

AT END OF GIRDER — AT ℄ OF GIRDER

0.6"Ø LOW RELAXATION STRAND LAYOUT

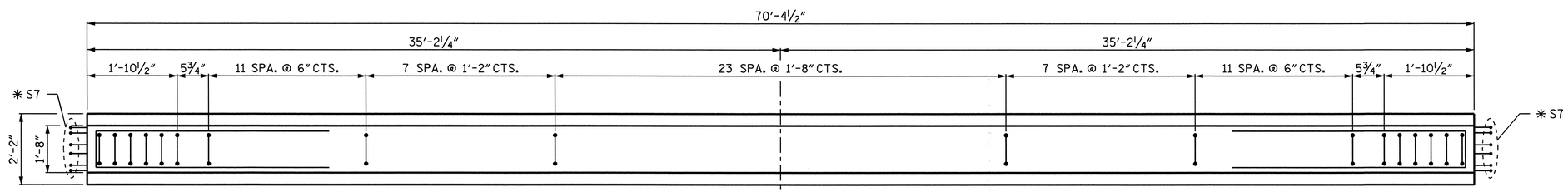

PLAN OF GIRDER

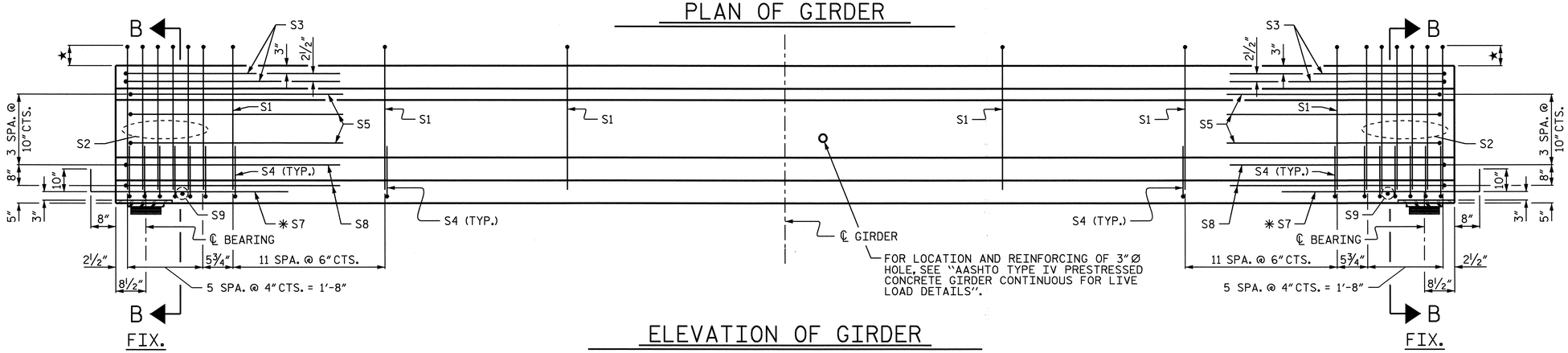

ELEVATION OF GIRDER

★ THE HEIGHT THAT THE S1 AND S2 BARS EXTEND ABOVE THE TOP OF THE GIRDER VARIES FROM 8½" AT THE END OF THE GIRDER TO 6" AT THE ℄ OF GIRDER.

0.6"Ø L. R. GRADE 270 STRANDS

AREA (SQUARE INCHES)	ULTIMATE STRENGTH (LBS. PER STRAND)	APPLIED PRESTRESS (LBS. PER STRAND)
0.217	58,600	43,950

REINFORCING STEEL FOR ONE GIRDER

BAR	NUMBER	SIZE	TYPE	LENGTH	WEIGHT
S1	60	#4	1	10'-8"	428
S2	12	#6	1	11'-1"	200
S3	4	#4	2	9'-1"	24
S4	72	#4	3	3'-5"	164
S5	6	#4	2	8'-5"	34
* S7	12	#5	STR	3'-8"	46
S8	4	#4	2	8'-7"	23
S9	2	#3	STR	1'-10"	1

* NOTE: S7 BARS SHALL BE BENT AFTER GIRDER FABRICATION AND BEFORE SHIPMENT. HEAT BENDING SHALL NOT BE ALLOWED.

BAR TYPES

ALL BAR DIMENSIONS ARE OUT TO OUT.

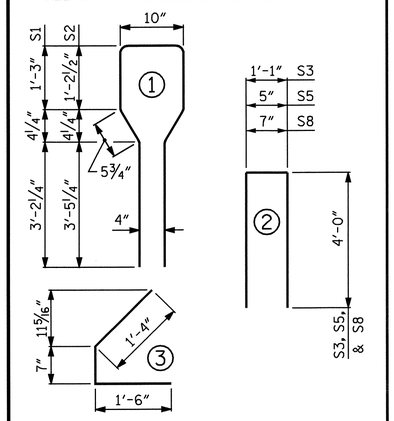

QUANTITIES FOR ONE GIRDER

	REINFORCING STEEL	6500 PSI CONCRETE	0.6"Ø L.R. STRANDS
	LB.	C.Y.	No.
	920	14.3	28

GIRDERS REQUIRED PER SPAN

NUMBER	LENGTH	TOTAL LENGTH
4	70'-4½"	281.50

PROJECT NO. B-2532

CRAVEN COUNTY

STATION: 31+21.29 -L-

SHEET 11 OF 16

STATE OF NORTH CAROLINA
DEPARTMENT OF TRANSPORTATION
RALEIGH

AASHTO TYPE IV PRESTRESSED CONCRETE GIRDER CONTINUOUS FOR LIVE LOAD SPAN "Q" (STRAIGHT STRAND OPTION)

NORTH CAROLINA PROFESSIONAL SEAL 21638 ENGINEER LAURA E. SUTTON
11/30/06

REVISIONS						SHEET NO.
NO.	BY:	DATE:	NO.	BY:	DATE:	S-46
1			3			TOTAL SHEETS
2			4			348

DRAWN BY : P.C. BREWER DATE : 7/26/06
CHECKED BY : A.S. CALLAWAY DATE : 9/14/06

24-OCT-2006 14:55
r:\Structures\pbrewer\Microstation\B2532_sd_G1_01.dgn
LSUTTON

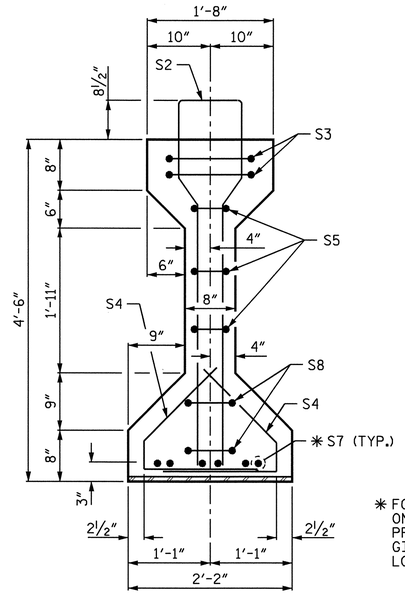

✱ FOR S7 BARS, SEE DETAIL "A" ON "AASHTO TYPE IV PRESTRESSED CONCRETE GIRDER CONTINUOUS FOR LIVE LOAD DETAILS" SHEET

SECTION B-B

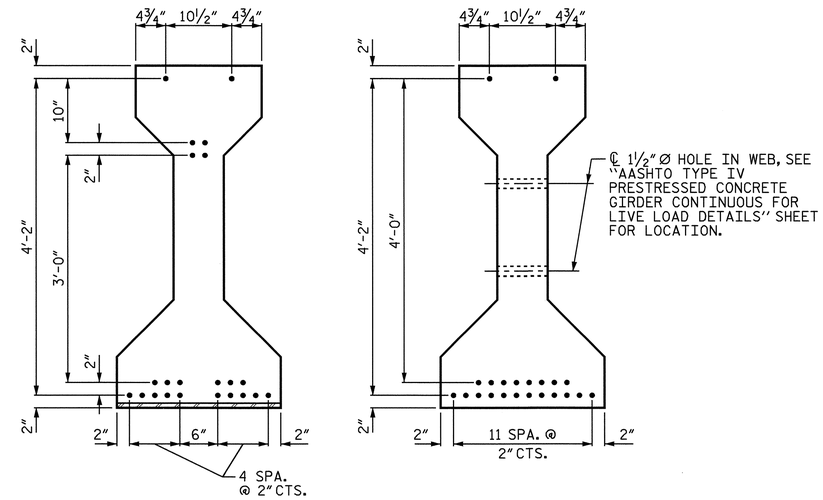

AT END OF GIRDER — AT ℄ OF GIRDER

0.6"Ø LOW RELAXATION STRAND LAYOUT

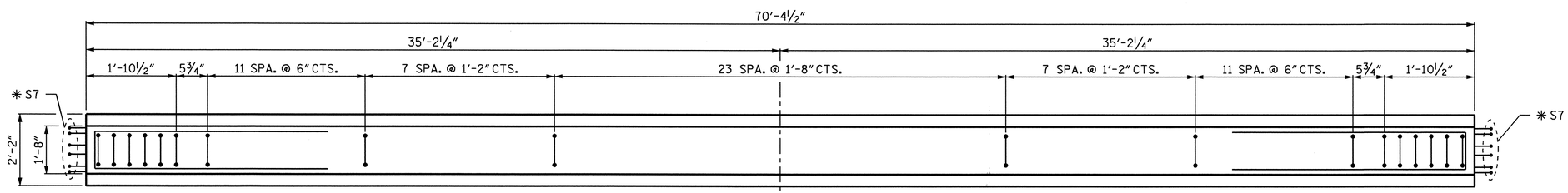

PLAN OF GIRDER

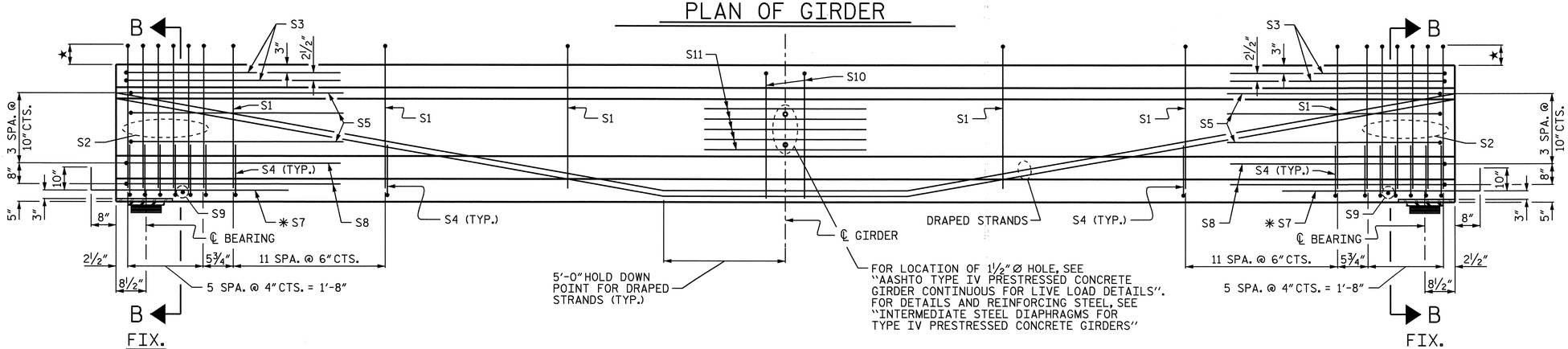

ELEVATION OF GIRDER

★ THE HEIGHT THAT THE S1 AND S2 BARS EXTEND ABOVE THE TOP OF THE GIRDER VARIES FROM 8½" AT THE END OF THE GIRDER TO 6" AT THE ℄ OF GIRDER.

0.6"Ø L. R. GRADE 270 STRANDS

AREA (SQUARE INCHES)	ULTIMATE STRENGTH (LBS. PER STRAND)	APPLIED PRESTRESS (LBS. PER STRAND)
0.217	58,600	43,950

REINFORCING STEEL FOR ONE GIRDER

BAR	NUMBER	SIZE	TYPE	LENGTH	WEIGHT
S1	60	#4	1	10'-8"	428
S2	12	#6	1	11'-1"	200
S3	4	#4	2	9'-1"	24
S4	72	#4	3	3'-5"	164
S5	6	#4	2	8'-5"	34
✱ S7	12	#5	STR	3'-8"	46
S8	4	#4	2	8'-7"	23
S9	2	#3	STR	1'-10"	1
S10	2	#5	2	8'-8"	18
S11	5	#4	STR	7'-0"	23

✱ NOTE: S7 BARS SHALL BE BENT AFTER GIRDER FABRICATION AND BEFORE SHIPMENT. HEAT BENDING SHALL NOT BE ALLOWED.

BAR TYPES

ALL BAR DIMENSIONS ARE OUT TO OUT.

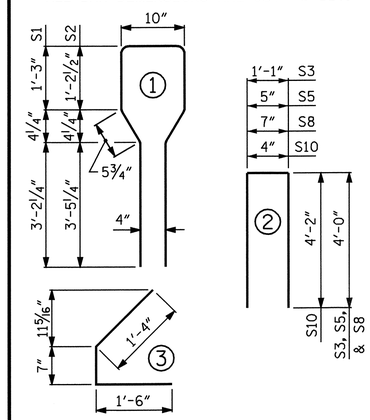

QUANTITIES FOR ONE GIRDER

	REINFORCING STEEL	5000 PSI CONCRETE	0.6"Ø L.R. STRANDS
	LB.	C.Y.	No.
	961	14.3	22

GIRDERS REQUIRED PER SPAN

NUMBER	LENGTH	TOTAL LENGTH
4	70'-4½"	281.50

PROJECT NO. B-2532

CRAVEN COUNTY

STATION: 31+21.29 -L-

SHEET 12 OF 16

STATE OF NORTH CAROLINA
DEPARTMENT OF TRANSPORTATION
RALEIGH

AASHTO TYPE IV PRESTRESSED CONCRETE GIRDER CONTINUOUS FOR LIVE LOAD SPAN "R"

NORTH CAROLINA PROFESSIONAL SEAL 21638 ENGINEER LAURA E. SUTTON
11/30/06

REVISIONS						SHEET NO.
NO.	BY:	DATE:	NO.	BY:	DATE:	S-47
1			3			TOTAL SHEETS
2			4			348

DRAWN BY : P.C. BREWER DATE : 7/26/06
CHECKED BY : A.S. CALLAWAY DATE : 9/14/06

24-OCT-2006 14:55
r:\Structures\pbrewer\Microstation\B2532_sd_G1_01.dgn
LSUTTON

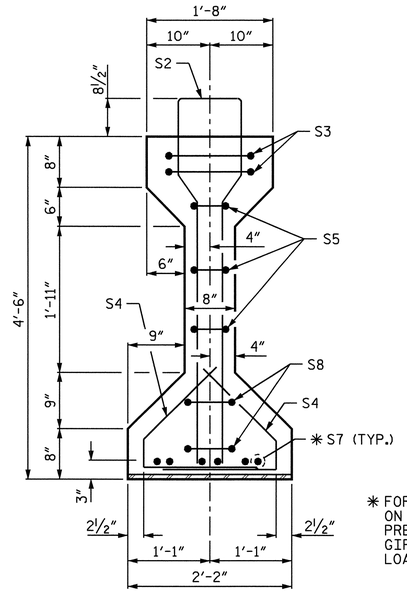

✱ FOR S7 BARS, SEE DETAIL "A" ON "AASHTO TYPE IV PRESTRESSED CONCRETE GIRDER CONTINUOUS FOR LIVE LOAD DETAILS" SHEET

SECTION B-B

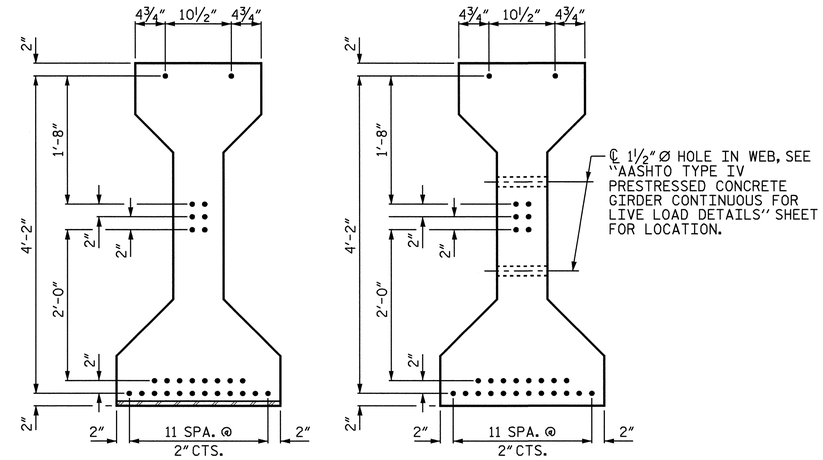

AT END OF GIRDER

AT ℄ OF GIRDER

0.6"Ø LOW RELAXATION STRAND LAYOUT

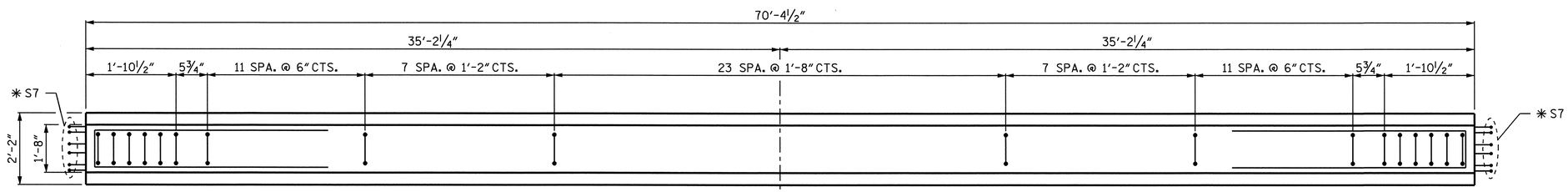

PLAN OF GIRDER

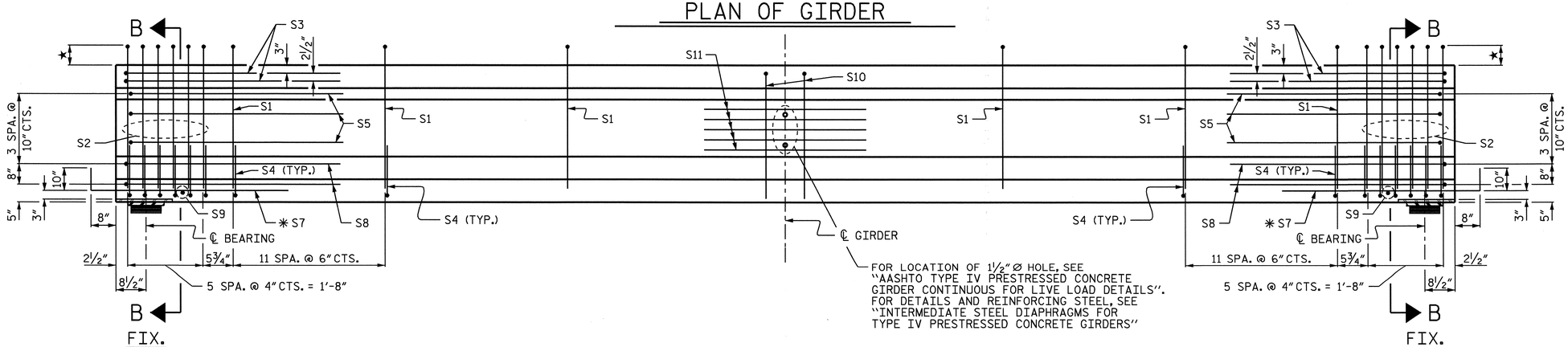

FOR LOCATION OF 1½"Ø HOLE, SEE "AASHTO TYPE IV PRESTRESSED CONCRETE GIRDER CONTINUOUS FOR LIVE LOAD DETAILS". FOR DETAILS AND REINFORCING STEEL, SEE "INTERMEDIATE STEEL DIAPHRAGMS FOR TYPE IV PRESTRESSED CONCRETE GIRDERS"

ELEVATION OF GIRDER

★ THE HEIGHT THAT THE S1 AND S2 BARS EXTEND ABOVE THE TOP OF THE GIRDER VARIES FROM 8½" AT THE END OF THE GIRDER TO 6" AT THE ℄ OF GIRDER.

0.6"Ø L. R. GRADE 270 STRANDS

AREA (SQUARE INCHES)	ULTIMATE STRENGTH (LBS. PER STRAND)	APPLIED PRESTRESS (LBS. PER STRAND)
0.217	58,600	43,950

REINFORCING STEEL FOR ONE GIRDER

BAR	NUMBER	SIZE	TYPE	LENGTH	WEIGHT
S1	60	#4	1	10'-8"	428
S2	12	#6	1	11'-1"	200
S3	4	#4	2	9'-1"	24
S4	72	#4	3	3'-5"	164
S5	6	#4	2	8'-5"	34
✱ S7	12	#5	STR	3'-8"	46
S8	4	#4	2	8'-7"	23
S9	2	#3	STR	1'-10"	1
S10	2	#5	2	8'-8"	18
S11	5	#4	STR	7'-0"	23

✱ NOTE: S7 BARS SHALL BE BENT AFTER GIRDER FABRICATION AND BEFORE SHIPMENT. HEAT BENDING SHALL NOT BE ALLOWED.

BAR TYPES

ALL BAR DIMENSIONS ARE OUT TO OUT.

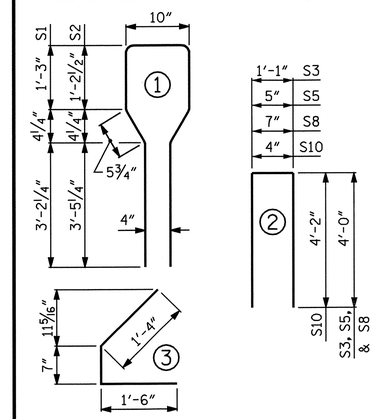

QUANTITIES FOR ONE GIRDER

	REINFORCING STEEL	6500 PSI CONCRETE	0.6"Ø L.R. STRANDS
	LB.	C.Y.	No.
	961	14.3	28

GIRDERS REQUIRED PER SPAN

NUMBER	LENGTH	TOTAL LENGTH
4	70'-4½"	281.50

PROJECT NO. B-2532

CRAVEN COUNTY

STATION: 31+21.29 -L-

SHEET 13 OF 16

STATE OF NORTH CAROLINA
DEPARTMENT OF TRANSPORTATION
RALEIGH

AASHTO TYPE IV PRESTRESSED CONCRETE GIRDER CONTINUOUS FOR LIVE LOAD SPAN "R" (STRAIGHT STRAND OPTION)

NORTH CAROLINA PROFESSIONAL SEAL 21638 ENGINEER LAURA E. SUTTON
11/30/06

REVISIONS						SHEET NO.
NO.	BY:	DATE:	NO.	BY:	DATE:	S-48
1			3			TOTAL SHEETS
2			4			348

DRAWN BY : P.C. BREWER DATE : 7/26/06
CHECKED BY : A.S. CALLAWAY DATE : 9/14/06

24-OCT-2006 14:55
r:\Structures\pbrewer\Microstation\B2532_sd_G1_01.dgn
LSUTTON

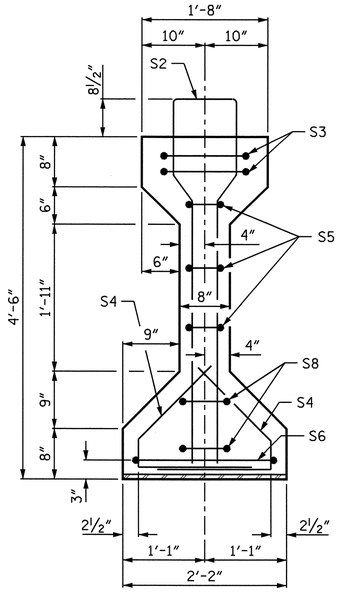

SECTION A-A

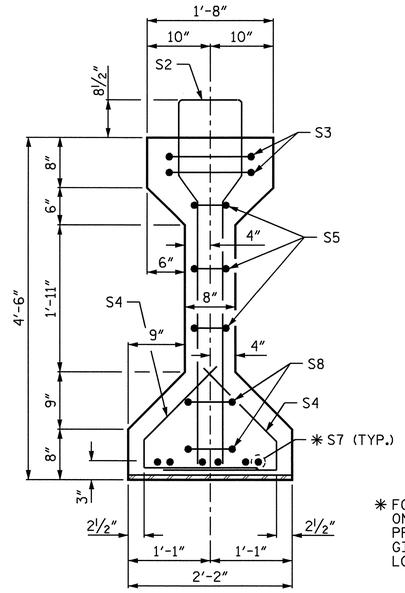

SECTION B-B

✱ FOR S7 BARS, SEE DETAIL "A" ON "AASHTO TYPE IV PRESTRESSED CONCRETE GIRDER CONTINUOUS FOR LIVE LOAD DETAILS" SHEET

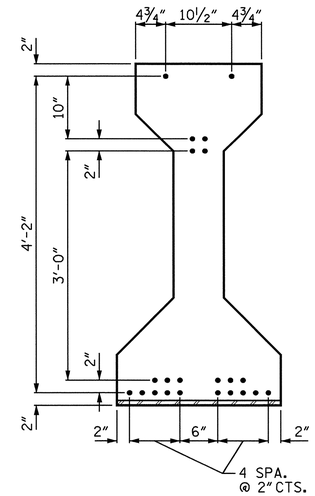

AT END OF GIRDER

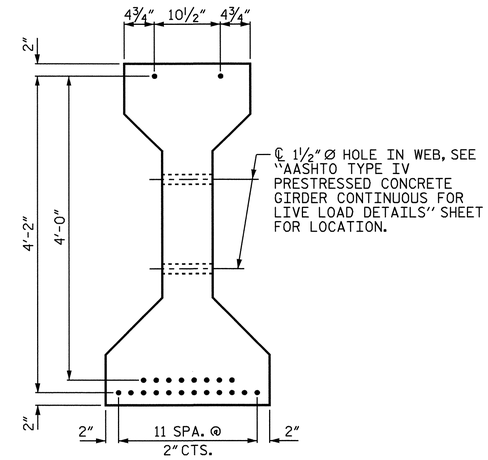

AT ℄ OF GIRDER

0.6"Ø LOW RELAXATION STRAND LAYOUT

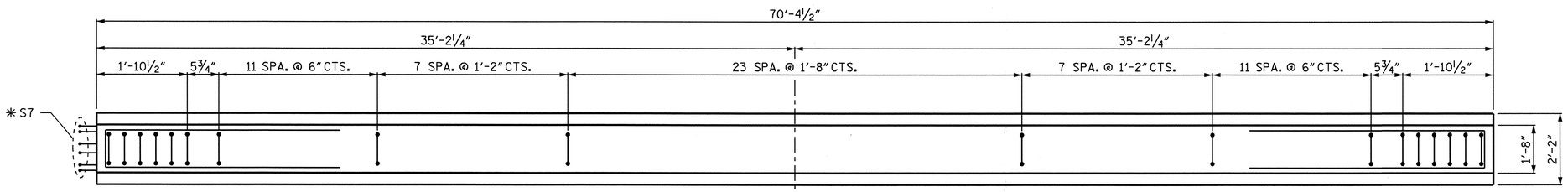

PLAN OF GIRDER

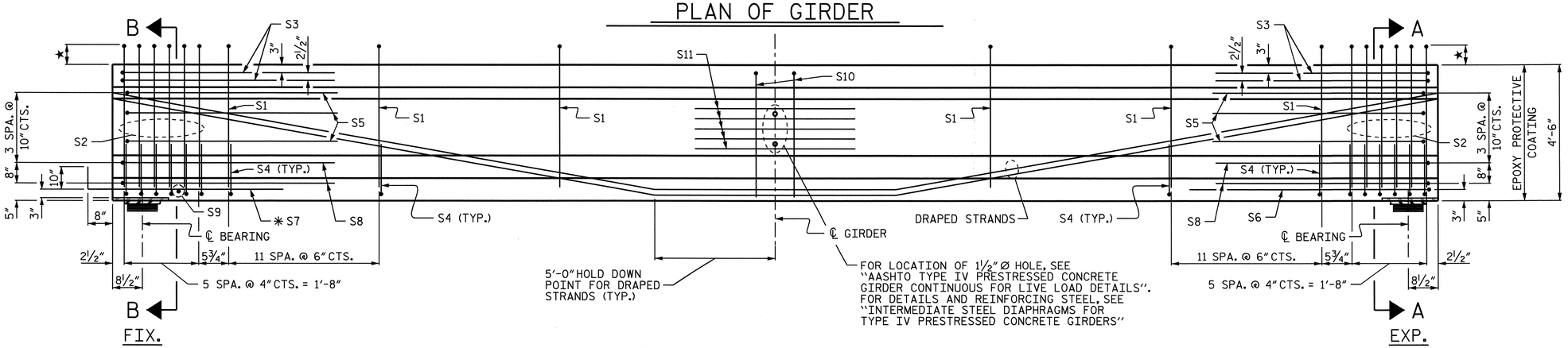

ELEVATION OF GIRDER

★ THE HEIGHT THAT THE S1 AND S2 BARS EXTEND ABOVE THE TOP OF THE GIRDER VARIES FROM 8½" AT THE END OF THE GIRDER TO 6" AT THE ℄ OF GIRDER.

0.6"Ø L. R. GRADE 270 STRANDS

AREA (SQUARE INCHES)	ULTIMATE STRENGTH (LBS. PER STRAND)	APPLIED PRESTRESS (LBS. PER STRAND)
0.217	58,600	43,950

REINFORCING STEEL FOR ONE GIRDER

BAR	NUMBER	SIZE	TYPE	LENGTH	WEIGHT
S1	60	#4	1	10'-8"	428
S2	12	#6	1	11'-1"	200
S3	4	#4	2	9'-1"	24
S4	72	#4	3	3'-5"	164
S5	6	#4	2	8'-5"	34
S6	1	#4	2	9'-11"	7
✱ S7	6	#5	STR	3'-8"	23
S8	4	#4	2	8'-7"	23
S9	1	#3	STR	1'-10"	1
S10	2	#5	2	8'-8"	18
S11	5	#4	STR	7'-0"	23

✱ NOTE: S7 BARS SHALL BE BENT AFTER GIRDER FABRICATION AND BEFORE SHIPMENT. HEAT BENDING SHALL NOT BE ALLOWED.

BAR TYPES

ALL BAR DIMENSIONS ARE OUT TO OUT.

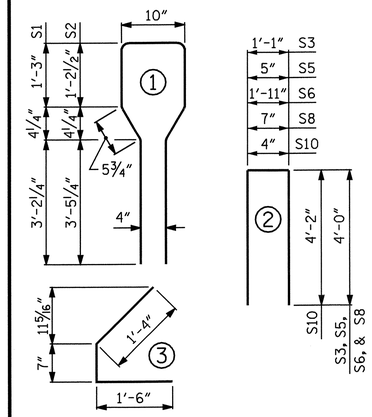

QUANTITIES FOR ONE GIRDER

	REINFORCING STEEL	5000 PSI CONCRETE	0.6"Ø L.R. STRANDS
	LB.	C.Y.	No.
	945	14.3	22

GIRDERS REQUIRED

NUMBER	LENGTH	TOTAL LENGTH
4	70'-4½"	281.50

PROJECT NO. B-2532

CRAVEN COUNTY

STATION: 31+21.29 -L-

SHEET 14 OF 16

STATE OF NORTH CAROLINA
DEPARTMENT OF TRANSPORTATION
RALEIGH

AASHTO TYPE IV PRESTRESSED CONCRETE GIRDER CONTINUOUS FOR LIVE LOAD SPAN "S"

NORTH CAROLINA PROFESSIONAL SEAL 21638 ENGINEER LAURA E. SUTTON
11/30/06

REVISIONS						SHEET NO.
NO.	BY:	DATE:	NO.	BY:	DATE:	S-49
1			3			TOTAL SHEETS
2			4			348

DRAWN BY : P.C. BREWER DATE : 7/26/06
CHECKED BY : A.S. CALLAWAY DATE : 9/14/06

24-OCT-2006 14:55
r:\Structures\pbrewer\Microstation\B2532_sd_G1_01.dgn
LSUTTON

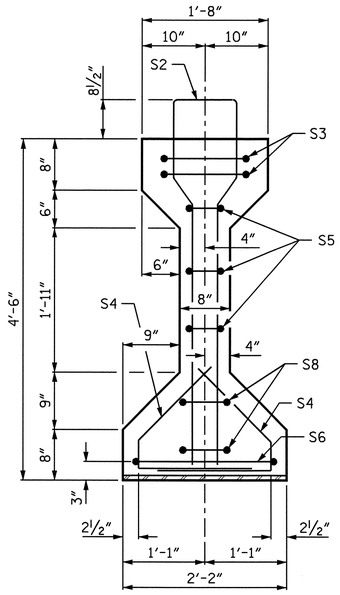

SECTION A-A

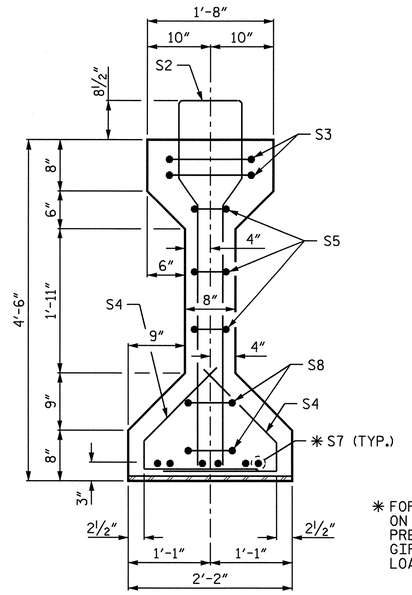

SECTION B-B

✱ FOR S7 BARS, SEE DETAIL "A" ON "AASHTO TYPE IV PRESTRESSED CONCRETE GIRDER CONTINUOUS FOR LIVE LOAD DETAILS" SHEET

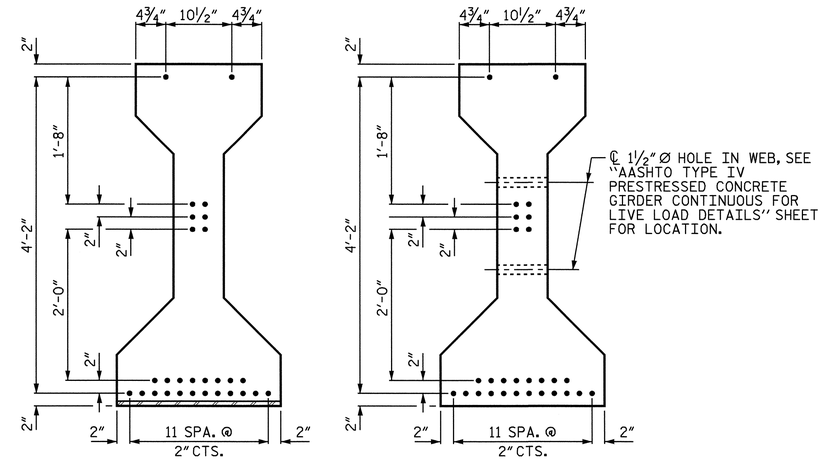

AT END OF GIRDER — AT ℄ OF GIRDER

0.6"Ø LOW RELAXATION STRAND LAYOUT

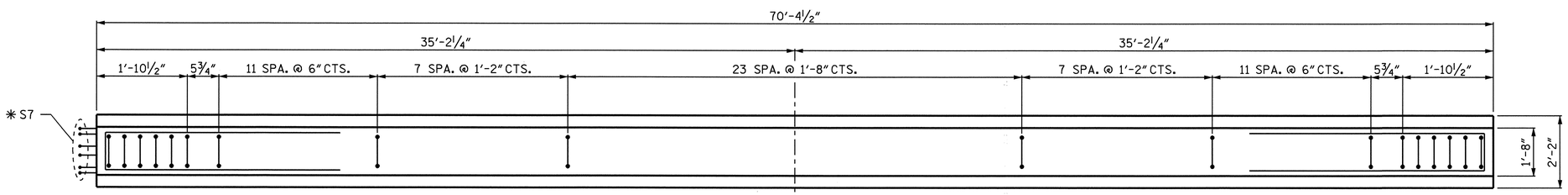

PLAN OF GIRDER

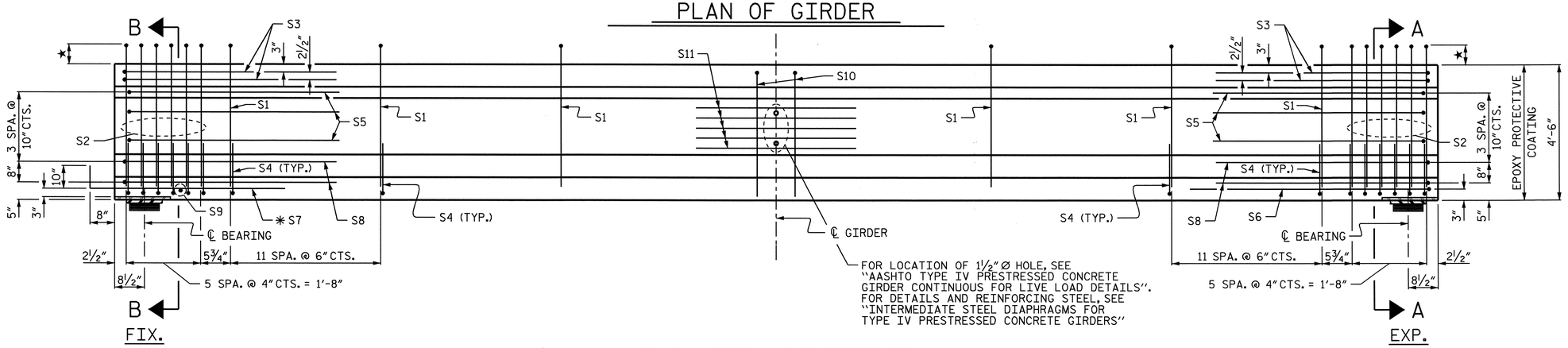

FOR LOCATION OF 1½"Ø HOLE, SEE "AASHTO TYPE IV PRESTRESSED CONCRETE GIRDER CONTINUOUS FOR LIVE LOAD DETAILS". FOR DETAILS AND REINFORCING STEEL, SEE "INTERMEDIATE STEEL DIAPHRAGMS FOR TYPE IV PRESTRESSED CONCRETE GIRDERS"

ELEVATION OF GIRDER

★ THE HEIGHT THAT THE S1 AND S2 BARS EXTEND ABOVE THE TOP OF THE GIRDER VARIES FROM 8½" AT THE END OF THE GIRDER TO 6" AT THE ℄ OF GIRDER.

0.6"Ø L. R. GRADE 270 STRANDS

AREA (SQUARE INCHES)	ULTIMATE STRENGTH (LBS. PER STRAND)	APPLIED PRESTRESS (LBS. PER STRAND)
0.217	58,600	43,950

REINFORCING STEEL FOR ONE GIRDER

BAR	NUMBER	SIZE	TYPE	LENGTH	WEIGHT
S1	60	#4	1	10'-8"	428
S2	12	#6	1	11'-1"	200
S3	4	#4	2	9'-1"	24
S4	72	#4	3	3'-5"	164
S5	6	#4	2	8'-5"	34
S6	1	#4	2	9'-11"	7
✱ S7	6	#5	STR	3'-8"	23
S8	4	#4	2	8'-7"	23
S9	1	#3	STR	1'-10"	1
S10	2	#5	2	8'-8"	18
S11	5	#4	STR	7'-0"	23

✱ NOTE: S7 BARS SHALL BE BENT AFTER GIRDER FABRICATION AND BEFORE SHIPMENT. HEAT BENDING SHALL NOT BE ALLOWED.

BAR TYPES

ALL BAR DIMENSIONS ARE OUT TO OUT.

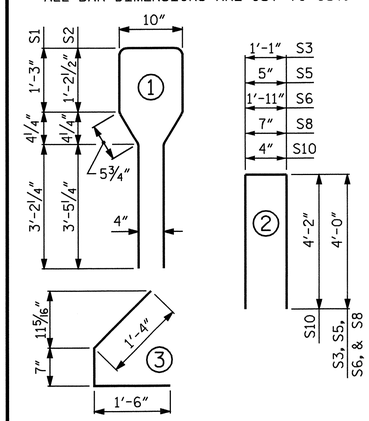

QUANTITIES FOR ONE GIRDER

	REINFORCING STEEL	6500 PSI CONCRETE	0.6"Ø L.R. STRANDS
	LB.	C.Y.	No.
	945	14.3	28

GIRDERS REQUIRED

NUMBER	LENGTH	TOTAL LENGTH
4	70'-4½"	281.50

PROJECT NO. B-2532

CRAVEN COUNTY

STATION: 31+21.29 -L-

SHEET 15 OF 16

STATE OF NORTH CAROLINA
DEPARTMENT OF TRANSPORTATION
RALEIGH

AASHTO TYPE IV PRESTRESSED CONCRETE GIRDER CONTINUOUS FOR LIVE LOAD SPAN "S" (STRAIGHT STRAND OPTION)

NORTH CAROLINA PROFESSIONAL SEAL 21638 ENGINEER LAURA E. SUTTON
11/30/06

REVISIONS						SHEET NO.
NO.	BY:	DATE:	NO.	BY:	DATE:	S-50
1			3			TOTAL SHEETS
2			4			348

DRAWN BY : P.C. BREWER DATE : 7/26/06
CHECKED BY : A.S. CALLAWAY DATE : 9/14/06

24-OCT-2006 14:55
r:\Structures\pbrewer\Microstation\B2532_sd_G1_01.dgn
LSUTTON

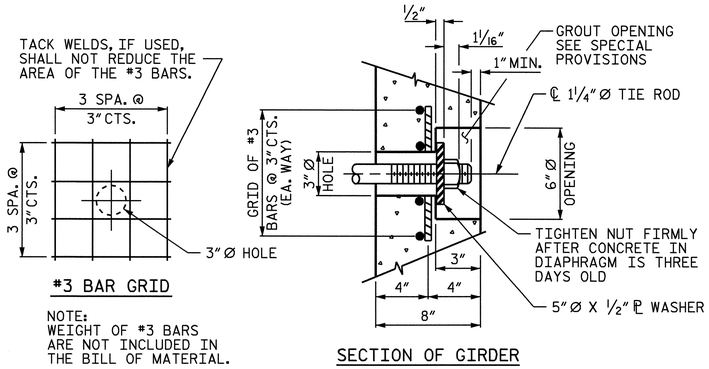

GROUTED RECESS FOR END OF TIE ROD

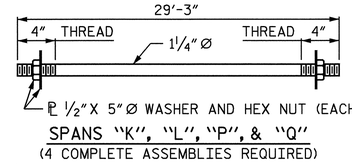

1 1/4" Ø TIE ROD ASSEMBLY

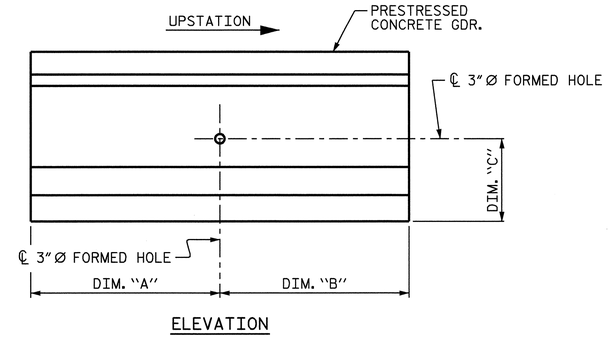

TIE ROD PLACEMENT DETAILS

(FOR CONCRETE INTERMEDIATE DIAPHRAGMS)

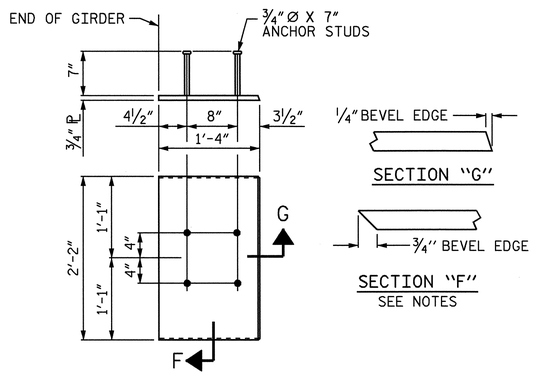

EMBEDDED PLATE "B-1" DETAILS FOR AASHTO TYPE IV GIRDER

TIE ROD PLACEMENT TABLE							
SPAN "K"				SPAN "L"			
	DIM. "A"	DIM. "B"	DIM. "C"		DIM. "A"	DIM. "B"	DIM. "C"
GIRDER 1	45'-8 1/4"	47'-2 1/4"	2'-1"	GIRDER 1	86'-4 1/2"	6'-6"	2'-1"
GIRDER 2	45'-8 1/4"	47'-2 1/4"	1'-10 11/16"	GIRDER 2	86'-4 1/2"	6'-6"	1'-10 11/16"
GIRDER 3	45'-8 1/4"	47'-2 1/4"	1'-9 7/8"	GIRDER 3	86'-4 1/2"	6'-6"	1'-9 7/8"
GIRDER 4	45'-8 1/4"	47'-2 1/4"	2'-0 3/16"	GIRDER 4	86'-4 1/2"	6'-6"	2'-0 3/16"
SPAN "P"				SPAN "Q"			
	DIM. "A"	DIM. "B"	DIM. "C"		DIM. "A"	DIM. "B"	DIM. "C"
GIRDER 1	6'-6"	63'-10 1/2"	2'-1"	GIRDER 1	36'-8 1/4"	33'-8 1/4"	2'-1"
GIRDER 2	6'-6"	63'-10 1/2"	1'-10 11/16"	GIRDER 2	36'-8 1/4"	33'-8 1/4"	1'-10 11/16"
GIRDER 3	6'-6"	63'-10 1/2"	1'-9 7/8"	GIRDER 3	36'-8 1/4"	33'-8 1/4"	1'-9 7/8"
GIRDER 4	6'-6"	63'-10 1/2"	2'-0 3/16"	GIRDER 4	36'-8 1/4"	33'-8 1/4"	2'-0 3/16"

NOTES:

ALL PRESTRESSING STRANDS SHALL BE 7-WIRE LOW-RELAXATION GRADE 270 STRANDS AND SHALL CONFORM TO AASHTO M203 EXCEPT FOR SAMPLING REQUIREMENTS WHICH SHALL BE IN ACCORDANCE WITH THE STANDARD SPECIFICATIONS.

TIE ROD ASSEMBLY SHALL BE AASHTO M270 GRADE 36 STRUCTURAL STEEL.

ALL REINFORCING STEEL SHALL BE GRADE 60.

APPLY EPOXY PROTECTIVE COATING TO END OF GIRDER SURFACES INDICATED IN ELEVATION VIEW.

EMBEDDED PLATE "B-1" SHALL BE GALVANIZED IN ACCORDANCE WITH THE STANDARD SPECIFICATIONS. BEVEL EDGES OF PLATE "B-1" TO GIVE CLOSE FIT BUT NOT TIGHT FIT TO STEEL CASTING FORM.

ANCHOR STUDS SHALL CONFORM TO AASHTO M169 GRADES 1010 THROUGH 1020 OR APPROVED EQUAL, AND SHALL MEET THE TYPE "B" REQUIREMENTS OF SUBSECTION 7.3 OF THE ANSI/AASHTO/AWS D1.5 BRIDGE WELDING CODE.

AT ENDS OF GIRDERS TO BE EMBEDDED IN CONCRETE DIAPHRAGMS, PRESTRESSING STRANDS MAY EXTEND A MAXIMUM OF 2" BEYOND THE GIRDER ENDS. OTHERWISE, PRESTRESSING STRANDS SHALL BE CUT FLUSH WITH THE GIRDER ENDS.

THE TRANSFER OF LOAD FROM THE ANCHORAGES TO THE GIRDER SHALL BE DONE WHEN CONCRETE HAS REACHED A COMPRESSIVE STRENGTH OF NOT LESS THAN:

6600 PSI FOR SPAN "A" THROUGH SPAN "J"
6900 PSI FOR SPAN "K" AND SPAN "L"
4100 PSI FOR SPAN "M" AND SPAN "O"
4000 PSI FOR SPAN "P" THROUGH SPAN "S"

FOR THE STRAIGHT STRAND OPTIONS, THE TRANSFER OF LOAD FROM THE ANCHORAGES TO THE GIRDER SHALL BE DONE WHEN CONCRETE HAS REACHED A COMPRESSIVE STRENGTH OF NOT LESS THAN:

5100 PSI FOR SPAN "M" AND SPAN "O"
4700 PSI FOR SPAN "P" THROUGH SPAN "S"

DEPENDING ON THE TYPE OF SYSTEM USED TO SUPPORT THE DECK SLAB FORMS, PRESET ANCHORS MAY BE NECESSARY IN THE PRESTRESSED CONCRETE GIRDER.

THE TOP SURFACE OF THE GIRDER, EXCLUDING THE OUTSIDE 4", SHALL BE RAKED TO A DEPTH OF 1/4".

WHEN DRAPED STRANDS ARE DETAILED, THE LONGITUDINAL LOCATION OF THE HOLD DOWN DEVICES SHALL BE WITHIN 6" OF THE LOCATION SHOWN AND THE CENTER OF GRAVITY OF THE GROUP OF DRAPED STRANDS SHALL BE LOCATED WITHIN 1/2" OF THE THEORETICAL LOCATION SHOWN.

FOR CRACK REPAIR OF PRESTRESSED CONCRETE GIRDERS, SEE SPECIAL PROVISIONS.

PRESTRESSED CONCRETE GIRDERS ARE DESIGNED FOR 3 f'c PSI TENSION IN THE PRECOMPRESSED TENSILE ZONE UNDER ALL LOADING CONDITIONS.

PRESTRESSED CONCRETE GIRDERS SHALL CONTAIN CALCIUM NITRITE CORROSION INHIBITOR.

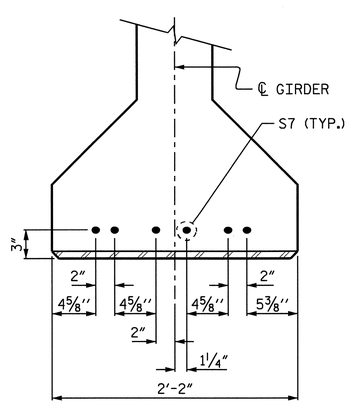

DETAIL "A"

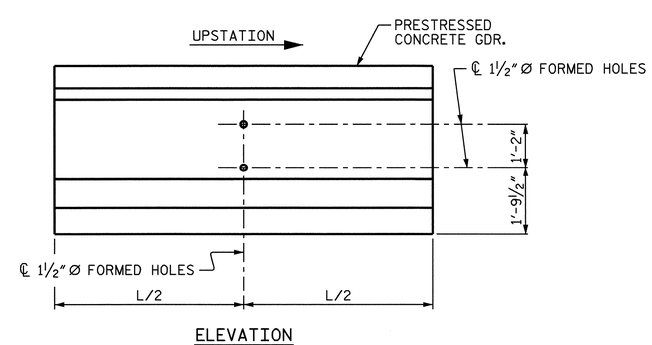

BOLT HOLE PLACEMENT DETAILS

(FOR STEEL INTERMEDIATE DIAPHRAGMS)

PROJECT NO. B-2532
CRAVEN COUNTY
STATION: 31+21.29 -L-

SHEET 16 OF 16

STATE OF NORTH CAROLINA
DEPARTMENT OF TRANSPORTATION
RALEIGH

AASHTO TYPE IV PRESTRESSED CONCRETE GIRDER CONTINUOUS FOR LIVE LOAD DETAILS

NORTH CAROLINA PROFESSIONAL SEAL 21638 ENGINEER LAURA E. SUTTON
11/30/06

REVISIONS						SHEET NO.
NO.	BY:	DATE:	NO.	BY:	DATE:	S-51
1			3			TOTAL SHEETS
2			4			348

DRAWN BY : P.C. BREWER DATE : 7/26/06
CHECKED BY : A.S. CALLAWAY DATE : 9/14/06

30-NOV-2006 11:51
r:\Structures\pbrewer\Microstation\B2532_sd_G1_01.dgn
lsutton

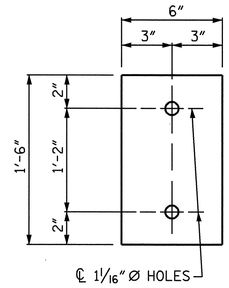

PLATE DETAILS

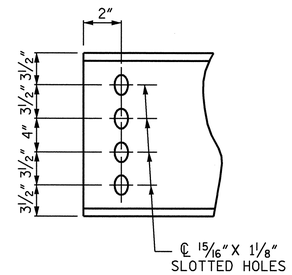

CHANNEL END

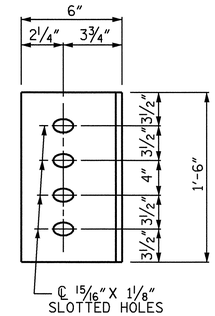

DIAPHRAGM FACE

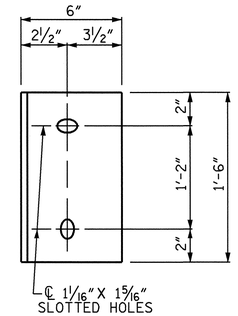

WEB FACE

CONNECTOR PLATE DETAILS

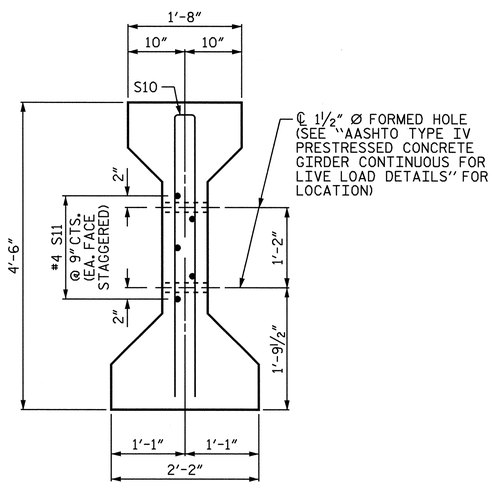

SECTION C-C

(S1 BARS NOT SHOWN)

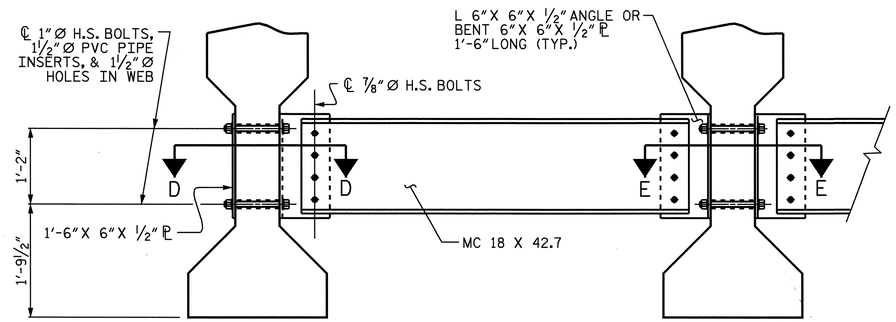

EXTERIOR GIRDER

INTERIOR GIRDER

PART SECTION AT INTERMEDIATE DIAPHRAGM

STRUCTURAL STEEL NOTES:

ALL INTERMEDIATE DIAPHRAGM STEEL, CONNECTOR PLATES AND PLATE WASHERS SHALL BE AASHTO M270 GRADE 50 OR APPROVED EQUAL.

TENSION ON THE AASHTO M164 BOLTS THROUGH THE CHANNEL MEMBER SHALL BE CALIBRATED USING DIRECT TENSION INDICATOR WASHERS IN ACCORDANCE WITH ARTICLE 440-8 OF THE STANDARD SPECIFICATIONS.

TENSION ON THE AASHTO M164 BOLTS THROUGH THE GIRDER WEB SHALL BE SNUG TIGHTENED FOLLOWED BY AN ADDITIONAL 1/4 TURN.

THE CHANNELS, ANGLES, BOLTS, WASHERS, PLATE WASHERS AND DIRECT TENSION INDICATORS SHALL BE GALVANIZED IN ACCORDANCE WITH THE STANDARD SPECIFICATIONS, OR METALLIZED. FOR THERMAL SPRAYED COATING (METALLIZATION), SEE SPECIAL PROVISIONS.

USE A MINIMUM 7/16" THICK PLATE WASHER WITH STANDARD HOLES UNDER EACH BOLT HEAD AND NUT. THE PLATE WASHERS SHALL HAVE SUFFICIENT SIZE TO COVER THE HOLES AFTER INSTALLATION. DIRECT TENSION INDICATORS ARE TO BE USED IN CONJUNCTION WITH THE PLATE WASHERS.

PROVIDE SUFFICIENT LENGTH OF ALL BOLTS TO ACCOMMODATE WASHERS, DIRECT TENSION INDICATORS, THE THICKNESS OF CONNECTING MEMBER PLUS AT LEAST 1/4" PROJECTION BEYOND THE NUT.

INTERMEDIATE DIAPHRAGM ASSEMBLY SHALL COMPLY WITH SECTION 1072 OF THE STANDARD SPECIFICATIONS.

CONTRACTOR SHALL SUBMIT TWO SETS OF WORKING DRAWINGS FOR THE INTERMEDIATE DIAPHRAGM ASSEMBLY FOR REVIEW, COMMENTS AND ACCEPTANCE. AFTER REVIEW, COMMENTS, AND ACCEPTANCE, SUBMIT SEVEN SETS FOR DISTRIBUTION.

IN THE EXTERIOR BAYS, TEMPORARY STRUTS SHALL BE PLACED BETWEEN PRESTRESSED GIRDERS ADJACENT TO THE STEEL DIAPHRAGMS. STRUTS SHALL REMAIN IN PLACE 3 DAYS AFTER CONCRETE IS PLACED. ALL AASHTO M164 H.S. BOLTS SHALL BE FULLY TIGHTENED AFTER THE STRUTS HAVE BEEN REMOVED.

THE COST OF THE STEEL DIAPHRAGMS AND ASSEMBLIES SHALL BE INCLUDED IN THE UNIT PRICE BID FOR PRESTRESSED CONCRETE GIRDERS.

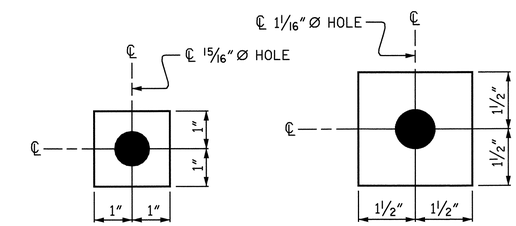

W1

ℙ 7/16" X 2" X 2"

USE WITH 7/8" Ø HVY. HEX NUTS & DIRECT TENSION INDICATOR WASHERS AT DIAPHRAGM CHANNEL TO CONNECTOR PLATE CONNECTIONS

W2

ℙ 7/16" X 3" X 3"

USE WITH 1" Ø HVY. HEX NUTS & DIRECT TENSION INDICATOR WASHERS AT CONNECTOR PLATE TO GIRDER CONNECTIONS

WASHER DETAILS

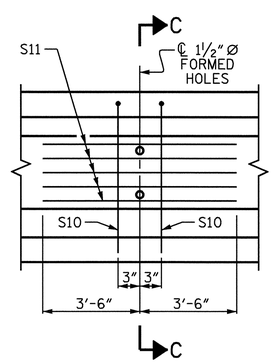

PARTIAL ELEVATION

SHOWING INTERMEDIATE STEEL DIAPHRAGM REINFORCING STEEL (TYP. EA. GIRDER)

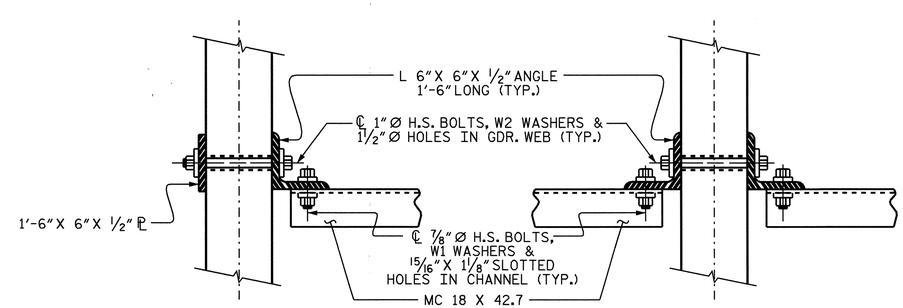

SECTION D-D

SECTION E-E

CONNECTION DETAILS

PROJECT NO. B-2532

CRAVEN COUNTY

STATION: 31+21.29 -L-

STATE OF NORTH CAROLINA
DEPARTMENT OF TRANSPORTATION
RALEIGH

INTERMEDIATE STEEL DIAPHRAGMS FOR TYPE IV PRESTRESSED CONCRETE GIRDERS

NORTH CAROLINA PROFESSIONAL SEAL 21638 ENGINEER LAURA E. SUTTON
11/30/06

REVISIONS						SHEET NO.
NO.	BY:	DATE:	NO.	BY:	DATE:	S-52
1			3			TOTAL SHEETS
2			4			348

ASSEMBLED BY : P.C. BREWER	DATE : 7/26/06
CHECKED BY : A.S. CALLAWAY	DATE : 9/14/06
DRAWN BY : TLA 6/05	ADDED 10/21/05
CHECKED BY : VC 6/05	REV. 5/1/06 TLA/GM

24-OCT-2006 14:55
r:\Structures\pbrewer\Microstation\B2532_sd_G1_01.dgn
LSUTTON

STD.No.PCG12

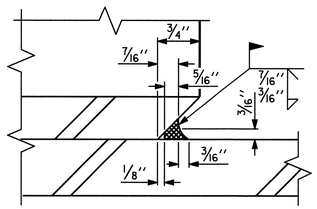

DETAIL "A"

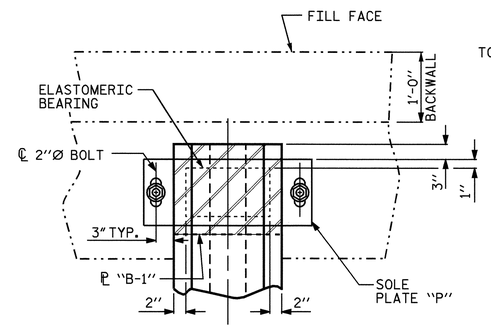

PLAN VIEW AT END BENTS

(EXPANSION)

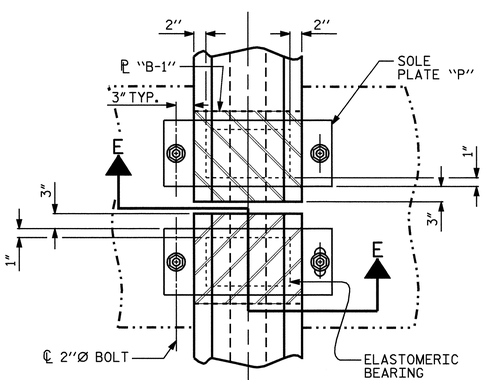

TYPICAL HALF-PLAN (SHOWING CONTINUOUS BENT)

TYPICAL HALF-PLAN (SHOWING SIMPLE SPAN BENT)

PLAN VIEW AT BENTS

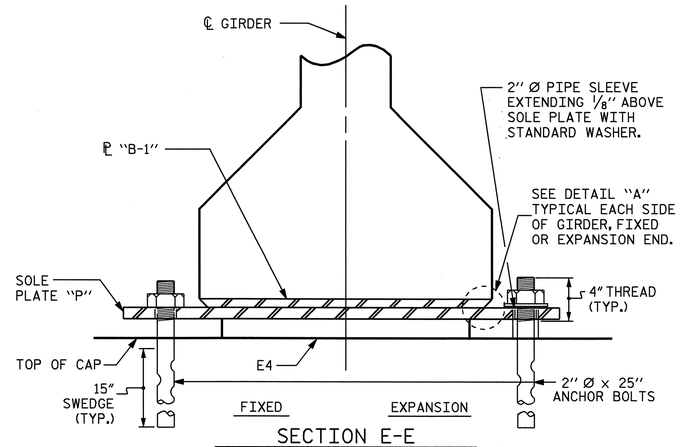

SECTION E-E

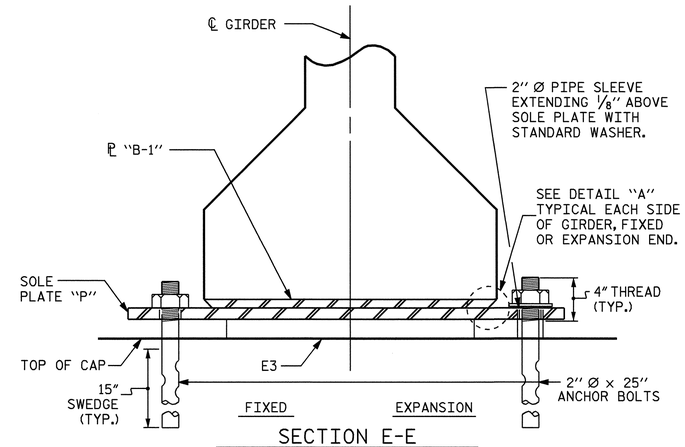

SECTION E-E

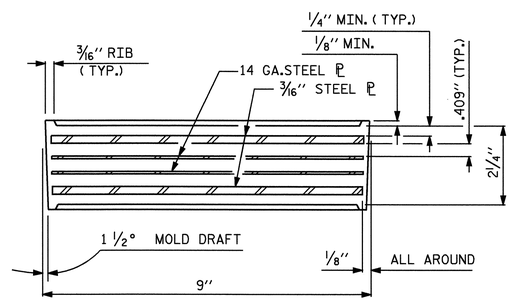

TYPICAL SECTION OF ELASTOMERIC BEARINGS

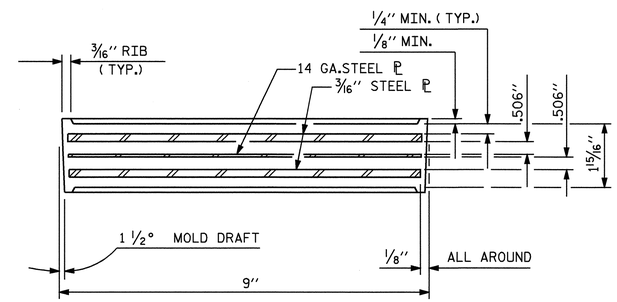

TYPICAL SECTION OF ELASTOMERIC BEARINGS

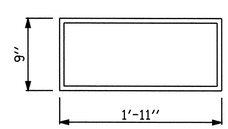

E4 (120 REQ'D)

PLAN VIEW OF ELASTOMERIC BEARING

TYPE V

FOR SPANS "A" THROUGH "M" AND SPAN "O"

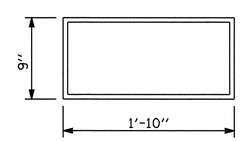

E3 (32 REQ'D)

PLAN VIEW OF ELASTOMERIC BEARING

TYPE IV

FOR SPANS "P" THROUGH "S"

NOTES

ELASTOMER IN ALL BEARINGS SHALL BE 60 DUROMETER HARDNESS.

AT ALL FIXED POINTS OF SUPPORT, NUTS FOR ANCHOR BOLTS ARE TO BE TIGHTENED FINGER TIGHT AND THEN BACKED OFF 1/2 TURN. THE THREAD OF THE NUT AND BOLT SHALL THEN BE BURRED WITH A SHARP POINTED TOOL.

THE 2" Ø PIPE SLEEVE SHALL BE CUT FROM SCHEDULE 40 PVC PLASTIC PIPE. THE PVC PLASTIC PIPE SHALL MEET THE REQUIREMENTS OF ASTM D1785.

STEEL SOLE PLATES, ANCHOR BOLTS, NUTS, AND WASHERS SHALL BE GALVANIZED IN ACCORDANCE WITH THE STANDARD SPECIFICATIONS.

PRIOR TO WELDING, GRIND THE GALVANIZED SURFACE OF THE PORTION OF THE EMBEDDED PLATE AND SOLE PLATE THAT ARE TO BE WELDED. AFTER WELDING, DAMAGED GALVANIZED SURFACES SHALL BE REPAIRED IN ACCORDANCE WITH THE STANDARD SPECIFICATIONS.

WHEN WELDING THE SOLE PLATE TO THE EMBEDDED PLATE IN THE GIRDER, USE TEMPERATURE INDICATING WAX PENS, OR OTHER SUITABLE MEANS, TO ENSURE THAT THE TEMPERATURE OF THE SOLE PLATE DOES NOT EXCEED 300°F. TEMPERATURES ABOVE THIS MAY DAMAGE THE ELASTOMER.

SOLE PLATE "P", BOLTS, NUTS, WASHERS, AND PIPE SLEEVE SHALL BE INCLUDED IN THE PAY ITEM FOR PRESTRESSED CONCRETE GIRDERS.

ANCHOR BOLTS SHALL MEET THE REQUIREMENTS OF ASTM A449. NUTS SHALL MEET THE REQUIREMENTS OF AASHTO M291-DH OR AASHTO M292-2H. WASHERS SHALL MEET THE REQUIREMENTS OF AASHTO M293. SHOP DRAWINGS ARE NOT REQUIRED FOR ANCHOR BOLT, NUTS AND WASHERS. SHOP INSPECTION IS REQUIRED.

ALL SURFACES OF BEARING PLATES SHALL BE SMOOTH AND STRAIGHT.

LOAD RATINGS	MAX. D.L.+L.L.
TYPE IV	137 K
TYPE V	180 K

PROJECT NO. B-2532

CRAVEN COUNTY

STATION: 31+21.29 -L-

SHEET 1 OF 2

STATE OF NORTH CAROLINA
DEPARTMENT OF TRANSPORTATION
RALEIGH

STANDARD ELASTOMERIC BEARING DETAILS

PRESTRESSED CONCRETE GIRDER SUPERSTRUCTURE

NORTH CAROLINA PROFESSIONAL SEAL 21638 ENGINEER LAURA E. SUTTON
Laura E. Sutton
11/30/06

REVISIONS							
NO.	BY:	DATE:	NO.	BY:	DATE:	SHEET NO.	S-53
1			3			TOTAL SHEETS	348
2			4				

ASSEMBLED BY : P.C. BREWER	DATE : 7/26/06		
CHECKED BY : A.S. CALLAWAY	DATE : 9/15/06		
DRAWN BY : WJH 8/89	REV. 10/17/00	RWW/LES	
CHECKED BY : CRK 8/89	REV. 7/10/01	RWW/LES	
	REV. 5/1/06	TLA/GM	

30-NOV-2006 11:51
r:\Structures\pbrewer\Microstation\B2532_sd_BG_01.dgn
lsutton

STD.No.EB3

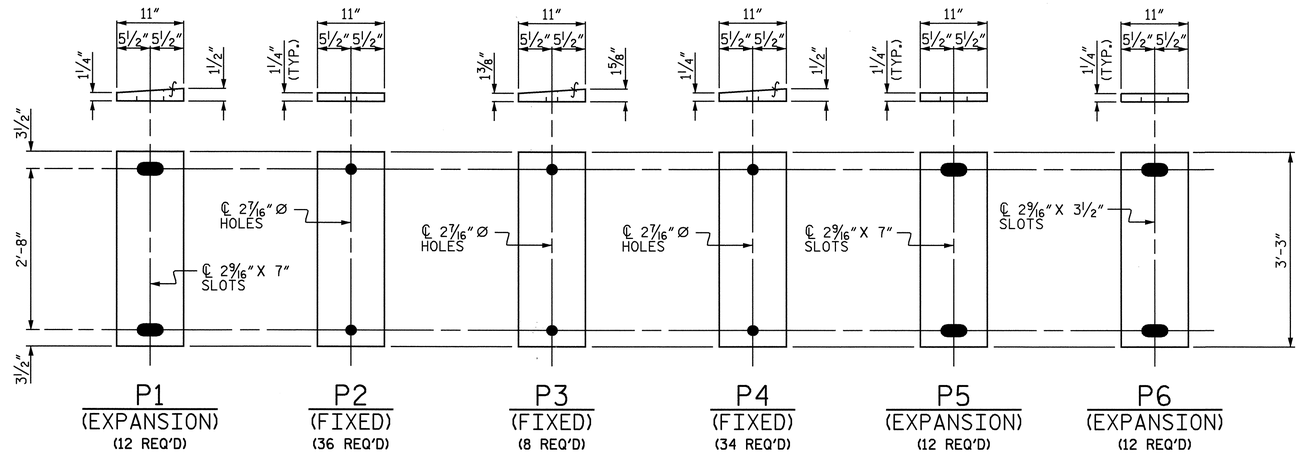

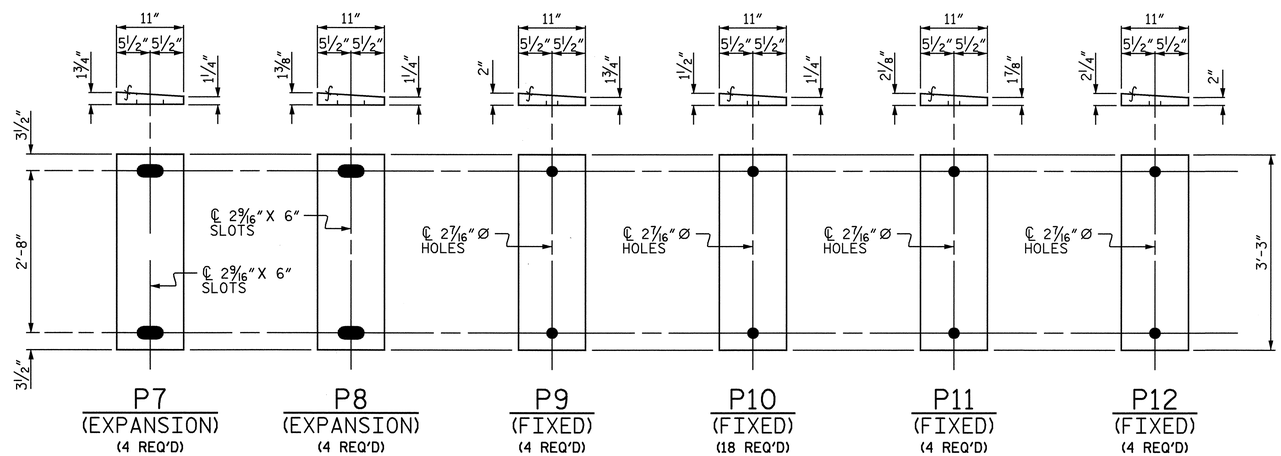

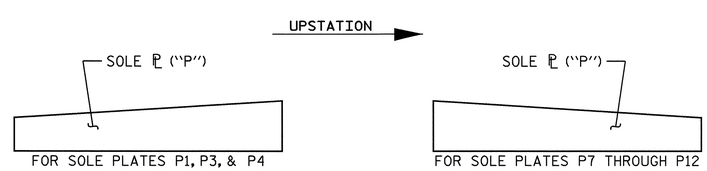

SOLE ℙ PLACEMENT DETAIL

PROJECT NO. B-2532

CRAVEN COUNTY

STATION: 31+21.29 -L-

SHEET 2 OF 2

STATE OF NORTH CAROLINA
DEPARTMENT OF TRANSPORTATION
RALEIGH

SUPERSTRUCTURE

SOLE PLATE DETAILS

NORTH CAROLINA PROFESSIONAL SEAL 21638 ENGINEER LAURA E. SUTTON
11/30/06

REVISIONS						SHEET NO.
NO.	BY:	DATE:	NO.	BY:	DATE:	S-54
1			3			TOTAL SHEETS
2			4			348

DRAWN BY : P.C. BREWER DATE : 7/26/06
CHECKED BY : A.S. CALLAWAY DATE : 9/15/06

30-NOV-2006 11:51
r:\Structures\pbrewer\Microstation\B2532_sd_BG_01.dgn
lsutton

DEAD LOAD DEFLECTION TABLE FOR GIRDERS

FOR SPANS "A" THROUGH "J"

0.6"Ø LOW RELAXATION	GIRDERS 1 & 4											GIRDERS 2 & 3										
TENTH POINTS	BRG.	.1	.2	.3	.4	.5	.6	.7	.8	.9	BRG.	BRG.	.1	.2	.3	.4	.5	.6	.7	.8	.9	BRG.
CAMBER (GIRDER ALONE IN PLACE) ↑	0.0	0.134	0.253	0.346	0.406	0.426	0.406	0.346	0.253	0.134	0.0	0.0	0.134	0.253	0.346	0.406	0.426	0.406	0.346	0.253	0.134	0.0
✳ DEFLECTION DUE TO SUPERIMPOSED D.L. ↓	0.0	0.046	0.087	0.119	0.140	0.147	0.140	0.119	0.087	0.046	0.0	0.0	0.047	0.090	0.123	0.144	0.151	0.144	0.123	0.090	0.047	0.0
FINAL CAMBER ↑	0	1 1/16"	2"	2 3/4"	3 3/16"	3 3/8"	3 3/16"	2 3/4"	2"	1 1/16"	0	0	1 1/16"	1 15/16"	2 11/16"	3 1/8"	3 5/16"	3 1/8"	2 11/16"	1 15/16"	1 1/16"	0

FOR SPAN "K"

0.6"Ø LOW RELAXATION	GIRDERS 1 & 4											GIRDERS 2 & 3										
TENTH POINTS	BRG.	.1	.2	.3	.4	.5	.6	.7	.8	.9	BRG.	BRG.	.1	.2	.3	.4	.5	.6	.7	.8	.9	BRG.
CAMBER (GIRDER ALONE IN PLACE) ↑	0.0	0.140	0.265	0.362	0.424	0.445	0.424	0.362	0.265	0.140	0.0	0.0	0.140	0.265	0.362	0.424	0.445	0.424	0.362	0.265	0.140	0.0
✳ DEFLECTION DUE TO SUPERIMPOSED D.L. ↓	0.0	0.047	0.089	0.122	0.143	0.150	0.143	0.122	0.089	0.047	0.0	0.0	0.048	0.092	0.126	0.147	0.154	0.147	0.126	0.092	0.048	0.0
FINAL CAMBER ↑	0	1 1/8"	2 1/8"	2 7/8"	3 3/8"	3 9/16"	3 3/8"	2 7/8"	2 1/8"	1 1/8"	0	0	1 1/8"	2 1/16"	2 13/16"	3 5/16"	3 1/2"	3 5/16"	2 13/16"	2 1/16"	1 1/8"	0

FOR SPAN "L"

0.6"Ø LOW RELAXATION	GIRDERS 1 & 4											GIRDERS 2 & 3										
TENTH POINTS	BRG.	.1	.2	.3	.4	.5	.6	.7	.8	.9	BRG.	BRG.	.1	.2	.3	.4	.5	.6	.7	.8	.9	BRG.
CAMBER (GIRDER ALONE IN PLACE) ↑	0.0	0.131	0.248	0.340	0.398	0.418	0.398	0.340	0.248	0.131	0.0	0.0	0.131	0.248	0.340	0.398	0.418	0.398	0.340	0.248	0.131	0.0
✳ DEFLECTION DUE TO SUPERIMPOSED D.L. ↓	0.0	0.047	0.088	0.121	0.141	0.149	0.141	0.121	0.088	0.047	0.0	0.0	0.048	0.091	0.125	0.146	0.153	0.146	0.125	0.091	0.048	0.0
FINAL CAMBER ↑	0	1"	1 15/16"	2 5/8"	3 1/16"	3 1/4"	3 1/16"	2 5/8"	1 15/16"	1"	0	0	1"	1 7/8"	2 9/16"	3"	3 3/16"	3"	2 9/16"	1 7/8"	1"	0

FOR SPANS "M" & "O"

0.6"Ø LOW RELAXATION	GIRDER 1											GIRDER 2										
TENTH POINTS	BRG.	.1	.2	.3	.4	.5	.6	.7	.8	.9	BRG.	BRG.	.1	.2	.3	.4	.5	.6	.7	.8	.9	BRG.
CAMBER (GIRDER ALONE IN PLACE) ↑	0.0	0.071	0.134	0.183	0.215	0.225	0.215	0.183	0.134	0.071	0.0	0.0	0.071	0.134	0.183	0.215	0.225	0.215	0.183	0.134	0.071	0.0
✳ DEFLECTION DUE TO SUPERIMPOSED D.L. ↓	0.0	0.023	0.044	0.060	0.071	0.074	0.071	0.060	0.044	0.023	0.0	0.0	0.024	0.046	0.063	0.073	0.077	0.073	0.063	0.046	0.024	0.0
FINAL CAMBER ↑	0	9/16"	1 1/16"	1 1/2"	1 3/4"	1 13/16"	1 3/4"	1 1/2"	1 1/16"	9/16"	0	0	9/16"	1 1/16"	1 7/16"	1 11/16"	1 3/4"	1 11/16"	1 7/16"	1 1/16"	9/16"	0

FOR SPANS "M" & "O"

0.6"Ø LOW RELAXATION	GIRDER 3											GIRDER 4										
TENTH POINTS	BRG.	.1	.2	.3	.4	.5	.6	.7	.8	.9	BRG.	BRG.	.1	.2	.3	.4	.5	.6	.7	.8	.9	BRG.
CAMBER (GIRDER ALONE IN PLACE) ↑	0.0	0.071	0.134	0.183	0.215	0.225	0.215	0.183	0.134	0.071	0.0	0.0	0.071	0.134	0.183	0.215	0.225	0.215	0.183	0.134	0.071	0.0
✳ DEFLECTION DUE TO SUPERIMPOSED D.L. ↓	0.0	0.024	0.046	0.063	0.073	0.077	0.073	0.063	0.046	0.024	0.0	0.0	0.021	0.040	0.055	0.064	0.067	0.064	0.055	0.040	0.021	0.0
FINAL CAMBER ↑	0	9/16"	1 1/16"	1 7/16"	1 11/16"	1 3/4"	1 11/16"	1 7/16"	1 1/16"	9/16"	0	0	5/8"	1 1/8"	1 9/16"	1 13/16"	1 7/8"	1 13/16"	1 9/16"	1 1/8"	5/8"	0

FOR SPANS "M" & "O"

0.6"Ø LOW RELAXATION	GIRDER 5											GIRDER 6										
TENTH POINTS	BRG.	.1	.2	.3	.4	.5	.6	.7	.8	.9	BRG.	BRG.	.1	.2	.3	.4	.5	.6	.7	.8	.9	BRG.
CAMBER (GIRDER ALONE IN PLACE) ↑	0.0	0.071	0.134	0.183	0.215	0.225	0.215	0.183	0.134	0.071	0.0	0.0	0.071	0.134	0.183	0.215	0.225	0.215	0.183	0.134	0.071	0.0
✳ DEFLECTION DUE TO SUPERIMPOSED D.L. ↓	0.0	0.018	0.034	0.047	0.055	0.057	0.055	0.047	0.034	0.018	0.0	0.0	0.020	0.038	0.053	0.062	0.065	0.062	0.053	0.038	0.020	0.0
FINAL CAMBER ↑	0	5/8"	1 3/16"	1 5/8"	1 15/16"	2"	1 15/16"	1 5/8"	1 3/16"	5/8"	0	0	5/8"	1 1/8"	1 9/16"	1 13/16"	1 15/16"	1 13/16"	1 9/16"	1 1/8"	5/8"	0

FOR SPAN "P"

0.6"Ø LOW RELAXATION	GIRDERS 1 & 4											GIRDERS 2 & 3										
TENTH POINTS	BRG.	.1	.2	.3	.4	.5	.6	.7	.8	.9	BRG.	BRG.	.1	.2	.3	.4	.5	.6	.7	.8	.9	BRG.
CAMBER (GIRDER ALONE IN PLACE) ↑	0.0	0.059	0.111	0.152	0.178	0.187	0.178	0.152	0.111	0.059	0.0	0.0	0.059	0.111	0.152	0.178	0.187	0.178	0.152	0.111	0.059	0.0
✳ DEFLECTION DUE TO SUPERIMPOSED D.L. ↓	0.0	0.020	0.038	0.052	0.061	0.064	0.061	0.052	0.038	0.020	0.0	0.0	0.021	0.040	0.054	0.063	0.067	0.063	0.054	0.040	0.021	0.0
FINAL CAMBER ↑	0	7/16"	7/8"	1 3/16"	1 3/8"	1 1/2"	1 3/8"	1 3/16"	7/8"	7/16"	0	0	7/16"	7/8"	1 3/16"	1 3/8"	1 7/16"	1 3/8"	1 3/16"	7/8"	7/16"	0

FOR SPAN "Q"

0.6"Ø LOW RELAXATION	GIRDERS 1 & 4											GIRDERS 2 & 3										
TENTH POINTS	BRG.	.1	.2	.3	.4	.5	.6	.7	.8	.9	BRG.	BRG.	.1	.2	.3	.4	.5	.6	.7	.8	.9	BRG.
CAMBER (GIRDER ALONE IN PLACE) ↑	0.0	0.059	0.111	0.152	0.178	0.187	0.178	0.152	0.111	0.059	0.0	0.0	0.059	0.111	0.152	0.178	0.187	0.178	0.152	0.111	0.059	0.0
✳ DEFLECTION DUE TO SUPERIMPOSED D.L. ↓	0.0	0.020	0.039	0.053	0.062	0.065	0.062	0.053	0.039	0.020	0.0	0.0	0.021	0.040	0.055	0.064	0.067	0.064	0.055	0.040	0.021	0.0
FINAL CAMBER ↑	0	7/16"	7/8"	1 3/16"	1 3/8"	1 7/16"	1 3/8"	1 3/16"	7/8"	7/16"	0	0	7/16"	7/8"	1 3/16"	1 3/8"	1 7/16"	1 3/8"	1 3/16"	7/8"	7/16"	0

FOR SPANS "R" & "S"

0.6"Ø LOW RELAXATION	GIRDER 1											GIRDERS 2 & 3										
TENTH POINTS	BRG.	.1	.2	.3	.4	.5	.6	.7	.8	.9	BRG.	BRG.	.1	.2	.3	.4	.5	.6	.7	.8	.9	BRG.
CAMBER (GIRDER ALONE IN PLACE) ↑	0.0	0.050	0.095	0.130	0.152	0.160	0.152	0.130	0.095	0.050	0.0	0.0	0.050	0.095	0.130	0.152	0.160	0.152	0.130	0.095	0.050	0.0
✳ DEFLECTION DUE TO SUPERIMPOSED D.L. ↓	0.0	0.020	0.037	0.051	0.060	0.063	0.060	0.051	0.037	0.020	0.0	0.0	0.021	0.039	0.053	0.062	0.065	0.062	0.053	0.039	0.021	0.0
FINAL CAMBER ↑	0	3/8"	11/16"	15/16"	1 1/8"	1 3/16"	1 1/8"	15/16"	11/16"	3/8"	0	0	3/8"	11/16"	15/16"	1 1/16"	1 1/8"	1 1/16"	15/16"	11/16"	3/8"	0

✳ INCLUDES SLAB, BUILDUPS, AND STAY-IN-PLACE FORMS.
ALL VALUES ARE SHOWN IN FEET (DECIMAL FORM), EXCEPT "FINAL CAMBER", WHICH IS SHOWN IN INCHES (FRACTION FORM).

PROJECT NO. B-2532
CRAVEN COUNTY
STATION: 31+21.29 -L-

SHEET 1 OF 2

STATE OF NORTH CAROLINA
DEPARTMENT OF TRANSPORTATION
RALEIGH

SUPERSTRUCTURE
DEAD LOAD DEFLECTIONS

NORTH CAROLINA PROFESSIONAL SEAL 21638 ENGINEER LAURA E. SUTTON
11/30/06

REVISIONS						SHEET NO.
NO.	BY:	DATE:	NO.	BY:	DATE:	S-55
1			3			TOTAL SHEETS
2			4			348

DRAWN BY : P.C. BREWER DATE : 7/26/06
CHECKED BY : A.S. CALLAWAY DATE : 9/14/06

30-NOV-2006 11:50
r:\Structures\pbrewer\Microstation\B2532_sd_DL_01.dgn
lsutton

DEAD LOAD DEFLECTION TABLE FOR GIRDERS

FOR SPANS "M" & "O" (STRAIGHT STRAND OPTION)

0.6"Ø LOW RELAXATION	GIRDER 1											GIRDER 2										
TENTH POINTS	BRG.	.1	.2	.3	.4	.5	.6	.7	.8	.9	BRG.	BRG.	.1	.2	.3	.4	.5	.6	.7	.8	.9	BRG.
CAMBER (GIRDER ALONE IN PLACE) ↑	0.0	0.056	0.105	0.144	0.169	0.177	0.169	0.144	0.105	0.056	0.0	0.0	0.056	0.105	0.144	0.169	0.177	0.169	0.144	0.105	0.056	0.0
✳ DEFLECTION DUE TO SUPERIMPOSED D.L. ↓	0.0	0.022	0.043	0.058	0.068	0.072	0.068	0.058	0.043	0.022	0.0	0.0	0.023	0.044	0.060	0.071	0.074	0.071	0.060	0.044	0.023	0.0
FINAL CAMBER ↑	0	3/8"	3/4"	11/16"	1 3/16"	1 1/4"	1 3/16"	11/16"	3/4"	3/8"	0	0	3/8"	3/4"	1"	1 3/16"	1 1/4"	1 3/16"	1"	3/4"	3/8"	0

FOR SPANS "M" & "O" (STRAIGHT STRAND OPTION)

0.6"Ø LOW RELAXATION	GIRDER 3											GIRDER 4										
TENTH POINTS	BRG.	.1	.2	.3	.4	.5	.6	.7	.8	.9	BRG.	BRG.	.1	.2	.3	.4	.5	.6	.7	.8	.9	BRG.
CAMBER (GIRDER ALONE IN PLACE) ↑	0.0	0.056	0.105	0.144	0.169	0.177	0.169	0.144	0.105	0.056	0.0	0.0	0.056	0.105	0.144	0.169	0.177	0.169	0.144	0.105	0.056	0.0
✳ DEFLECTION DUE TO SUPERIMPOSED D.L. ↓	0.0	0.023	0.044	0.060	0.071	0.074	0.071	0.060	0.044	0.023	0.0	0.0	0.020	0.039	0.053	0.062	0.065	0.062	0.053	0.039	0.020	0.0
FINAL CAMBER ↑	0	3/8"	3/4"	1"	1 3/16"	1 1/4"	1 3/16"	1"	3/4"	3/8"	0	0	7/16"	13/16"	1 1/16"	1 5/16"	1 3/8"	1 5/16"	1 1/16"	13/16"	7/16"	0

FOR SPANS "M" & "O" (STRAIGHT STRAND OPTION)

0.6"Ø LOW RELAXATION	GIRDER 5											GIRDER 6										
TENTH POINTS	BRG.	.1	.2	.3	.4	.5	.6	.7	.8	.9	BRG.	BRG.	.1	.2	.3	.4	.5	.6	.7	.8	.9	BRG.
CAMBER (GIRDER ALONE IN PLACE) ↑	0.0	0.056	0.105	0.144	0.169	0.177	0.169	0.144	0.105	0.056	0.0	0.0	0.056	0.105	0.144	0.169	0.177	0.169	0.144	0.105	0.056	0.0
✳ DEFLECTION DUE TO SUPERIMPOSED D.L. ↓	0.0	0.017	0.033	0.045	0.053	0.056	0.053	0.045	0.033	0.017	0.0	0.0	0.020	0.037	0.051	0.059	0.062	0.059	0.051	0.037	0.020	0.0
FINAL CAMBER ↑	0	7/16"	7/8"	1 3/16"	1 3/8"	1 7/16"	1 3/8"	1 3/16"	7/8"	7/16"	0	0	7/16"	13/16"	1 1/8"	1 5/16"	1 3/8"	1 5/16"	1 1/8"	13/16"	7/16"	0

FOR SPAN "P" (STRAIGHT STRAND OPTION)

0.6"Ø LOW RELAXATION	GIRDERS 1 & 4											GIRDERS 2 & 3										
TENTH POINTS	BRG.	.1	.2	.3	.4	.5	.6	.7	.8	.9	BRG.	BRG.	.1	.2	.3	.4	.5	.6	.7	.8	.9	BRG.
CAMBER (GIRDER ALONE IN PLACE) ↑	0.0	0.048	0.090	0.124	0.145	0.152	0.145	0.124	0.090	0.048	0.0	0.0	0.048	0.090	0.124	0.145	0.152	0.145	0.124	0.090	0.048	0.0
✳ DEFLECTION DUE TO SUPERIMPOSED D.L. ↓	0.0	0.018	0.034	0.046	0.054	0.057	0.054	0.046	0.034	0.018	0.0	0.0	0.018	0.035	0.048	0.056	0.059	0.056	0.048	0.035	0.018	0.0
FINAL CAMBER ↑	0	3/8"	11/16"	15/16"	1 1/16"	1 1/8"	1 1/16"	15/16"	11/16"	3/8"	0	0	3/8"	11/16"	15/16"	1 1/16"	1 1/8"	1 1/16"	15/16"	11/16"	3/8"	0

FOR SPAN "Q" (STRAIGHT STRAND OPTION)

0.6"Ø LOW RELAXATION	GIRDERS 1 & 4											GIRDERS 2 & 3										
TENTH POINTS	BRG.	.1	.2	.3	.4	.5	.6	.7	.8	.9	BRG.	BRG.	.1	.2	.3	.4	.5	.6	.7	.8	.9	BRG.
CAMBER (GIRDER ALONE IN PLACE) ↑	0.0	0.048	0.090	0.124	0.145	0.152	0.145	0.124	0.090	0.048	0.0	0.0	0.048	0.090	0.124	0.145	0.152	0.145	0.124	0.090	0.048	0.0
✳ DEFLECTION DUE TO SUPERIMPOSED D.L. ↓	0.0	0.018	0.034	0.047	0.055	0.058	0.055	0.047	0.034	0.018	0.0	0.0	0.019	0.035	0.048	0.057	0.060	0.057	0.048	0.035	0.019	0.0
FINAL CAMBER ↑	0	3/8"	11/16"	15/16"	1 1/16"	1 1/8"	1 1/16"	15/16"	11/16"	3/8"	0	0	3/8"	11/16"	15/16"	1 1/16"	1 1/8"	1 1/16"	15/16"	11/16"	3/8"	0

FOR SPANS "R" & "S" (STRAIGHT STRAND OPTION)

0.6"Ø LOW RELAXATION	GIRDERS 1 & 4											GIRDERS 2 & 3										
TENTH POINTS	BRG.	.1	.2	.3	.4	.5	.6	.7	.8	.9	BRG.	BRG.	.1	.2	.3	.4	.5	.6	.7	.8	.9	BRG.
CAMBER (GIRDER ALONE IN PLACE) ↑	0.0	0.048	0.090	0.124	0.145	0.152	0.145	0.124	0.090	0.048	0.0	0.0	0.048	0.090	0.124	0.145	0.152	0.145	0.124	0.090	0.048	0.0
✳ DEFLECTION DUE TO SUPERIMPOSED D.L. ↓	0.0	0.017	0.033	0.045	0.053	0.056	0.053	0.045	0.033	0.017	0.0	0.0	0.018	0.034	0.047	0.055	0.058	0.055	0.047	0.034	0.018	0.0
FINAL CAMBER ↑	0	3/8"	11/16"	15/16"	1 1/8"	1 1/8"	1 1/8"	15/16"	11/16"	3/8"	0	0	3/8"	11/16"	15/16"	1 1/16"	1 1/8"	1 1/16"	15/16"	11/16"	3/8"	0

✳ INCLUDES SLAB, BUILDUPS, AND STAY-IN-PLACE FORMS.
ALL VALUES ARE SHOWN IN FEET (DECIMAL FORM), EXCEPT "FINAL CAMBER", WHICH IS SHOWN IN INCHES (FRACTION FORM).

PROJECT NO. B-2532
CRAVEN COUNTY
STATION: 31+21.29 -L-

SHEET 2 OF 2

STATE OF NORTH CAROLINA
DEPARTMENT OF TRANSPORTATION
RALEIGH

SUPERSTRUCTURE
DEAD LOAD DEFLECTIONS
(STRAIGHT STRAND OPTION)

NORTH CAROLINA PROFESSIONAL SEAL 21638 ENGINEER LAURA E. SUTTON
11/30/06

REVISIONS						SHEET NO.
NO.	BY:	DATE:	NO.	BY:	DATE:	S-5L
1			3			TOTAL SHEETS
2			4			348

DRAWN BY : P.C. BREWER DATE : 7/26/06
CHECKED BY : A.S. CALLAWAY DATE : 9/14/06

30-NOV-2006 11:50
r:\Structures\pbrewer\Microstation\B2532_sd_DL_01.dgn
lsutton

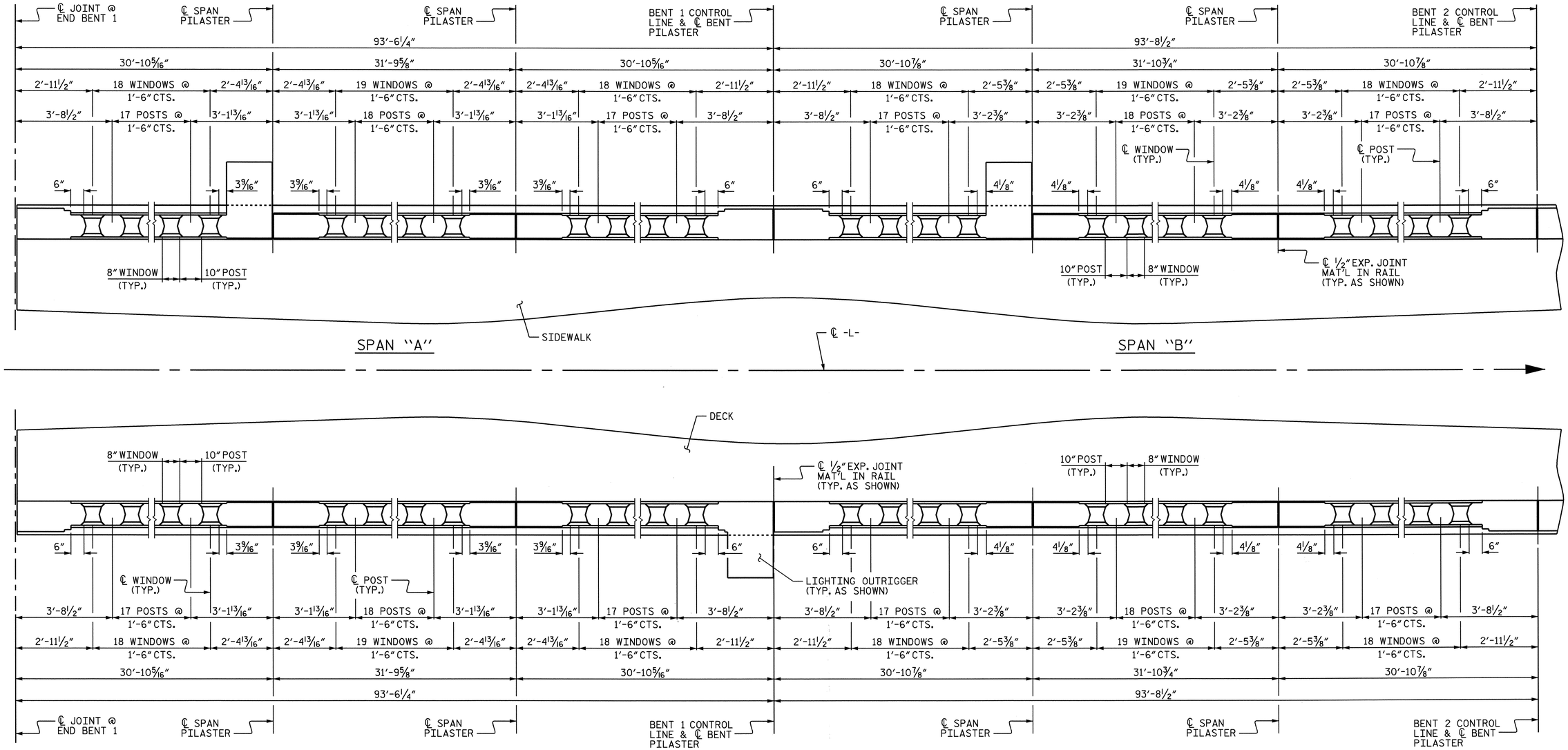

RAIL POST SPACING

NOTE:

FOR PILASTER DETAILS, SEE "CLASSIC CONCRETE BRIDGE RAIL DETAILS", SHEETS.

FOR LIGHTING OUTRIGGER REINFORCING STEEL AND DETAILS, SEE "LIGHTING OUTRIGGER" SHEET.

PROJECT NO. B-2532

CRAVEN COUNTY

STATION: 31+21.29 -L-

SHEET 1 OF 12

STATE OF NORTH CAROLINA
DEPARTMENT OF TRANSPORTATION
RALEIGH

SUPERSTRUCTURE
CLASSIC CONCRETE BRIDGE RAIL POST SPACING
SPANS "A" AND "B"

NORTH CAROLINA PROFESSIONAL SEAL 21638 ENGINEER LAURA E. SUTTON
11/30/06

REVISIONS						SHEET NO.
NO.	BY:	DATE:	NO.	BY:	DATE:	S-57
1			3			TOTAL SHEETS
2			4			348

DRAWN BY : P.C. BREWER DATE : 5/16/06
CHECKED BY : A.S. CALLAWAY DATE : 9/22/06

24-OCT-2006 14:54
r:\Structures\pbrewer\Microstation\B2532_sd_BR_01.dgn
LSUTTON

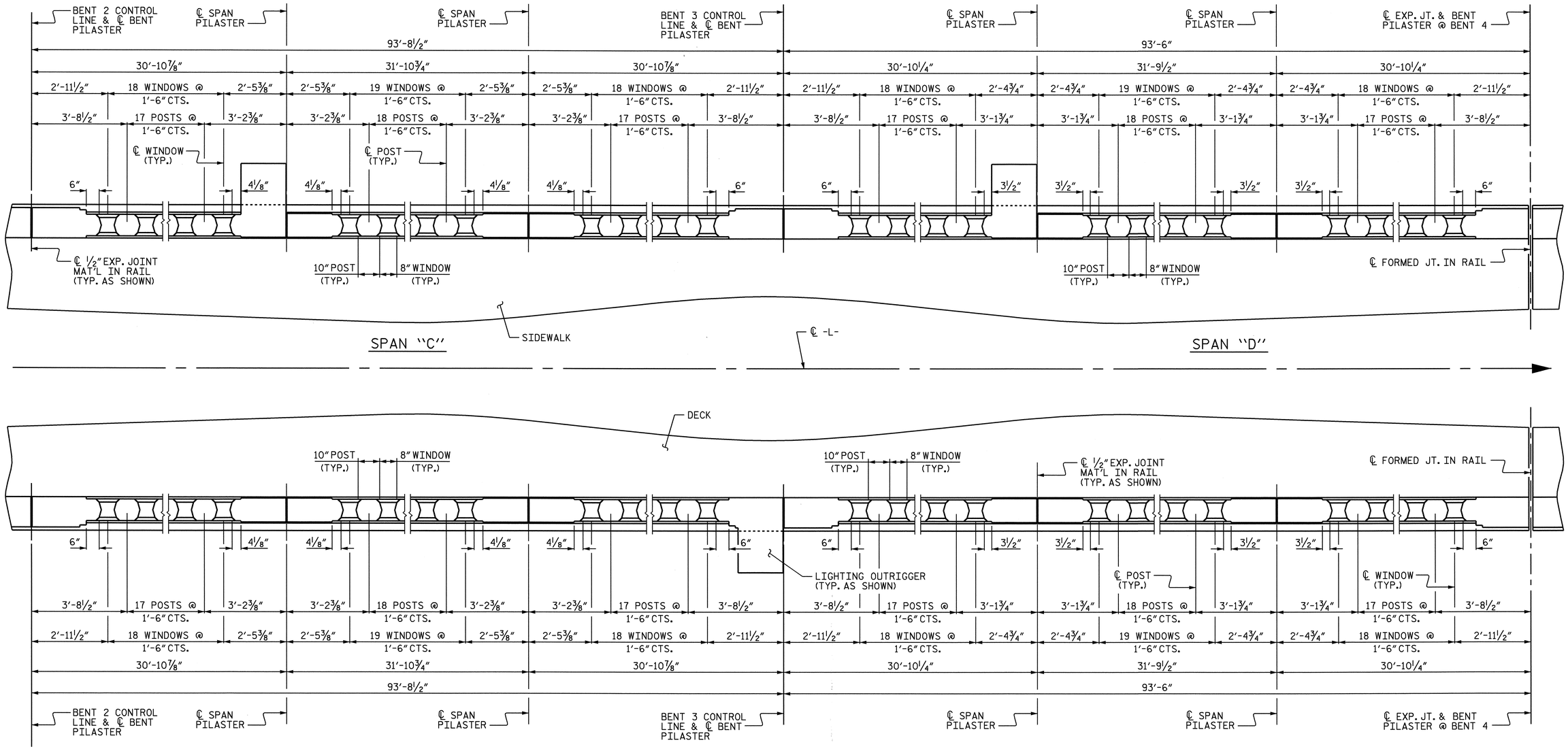

RAIL POST SPACING

NOTE:

FOR PILASTER DETAILS, SEE "CLASSIC CONCRETE BRIDGE RAIL DETAILS", SHEETS.

FOR LIGHTING OUTRIGGER REINFORCING STEEL AND DETAILS, SEE "LIGHTING OUTRIGGER" SHEET.

PROJECT NO. B-2532

CRAVEN COUNTY

STATION: 31+21.29 -L-

SHEET 2 OF 12

STATE OF NORTH CAROLINA
DEPARTMENT OF TRANSPORTATION
RALEIGH

SUPERSTRUCTURE
CLASSIC CONCRETE BRIDGE RAIL POST SPACING
SPANS "C" AND "D"

NORTH CAROLINA PROFESSIONAL SEAL 21638 ENGINEER LAURA E. SUTTON
Laura E. Sutton
11/30/06

REVISIONS						SHEET NO.
NO.	BY:	DATE:	NO.	BY:	DATE:	S-58
1			3			TOTAL SHEETS
2			4			348

DRAWN BY : P.C. BREWER DATE : 5/16/06
CHECKED BY : A.S. CALLAWAY DATE : 9/22/06

24-OCT-2006 14:54
r:\Structures\pbrewer\Microstation\B2532_sd_BR_01.dgn
LSUTTON

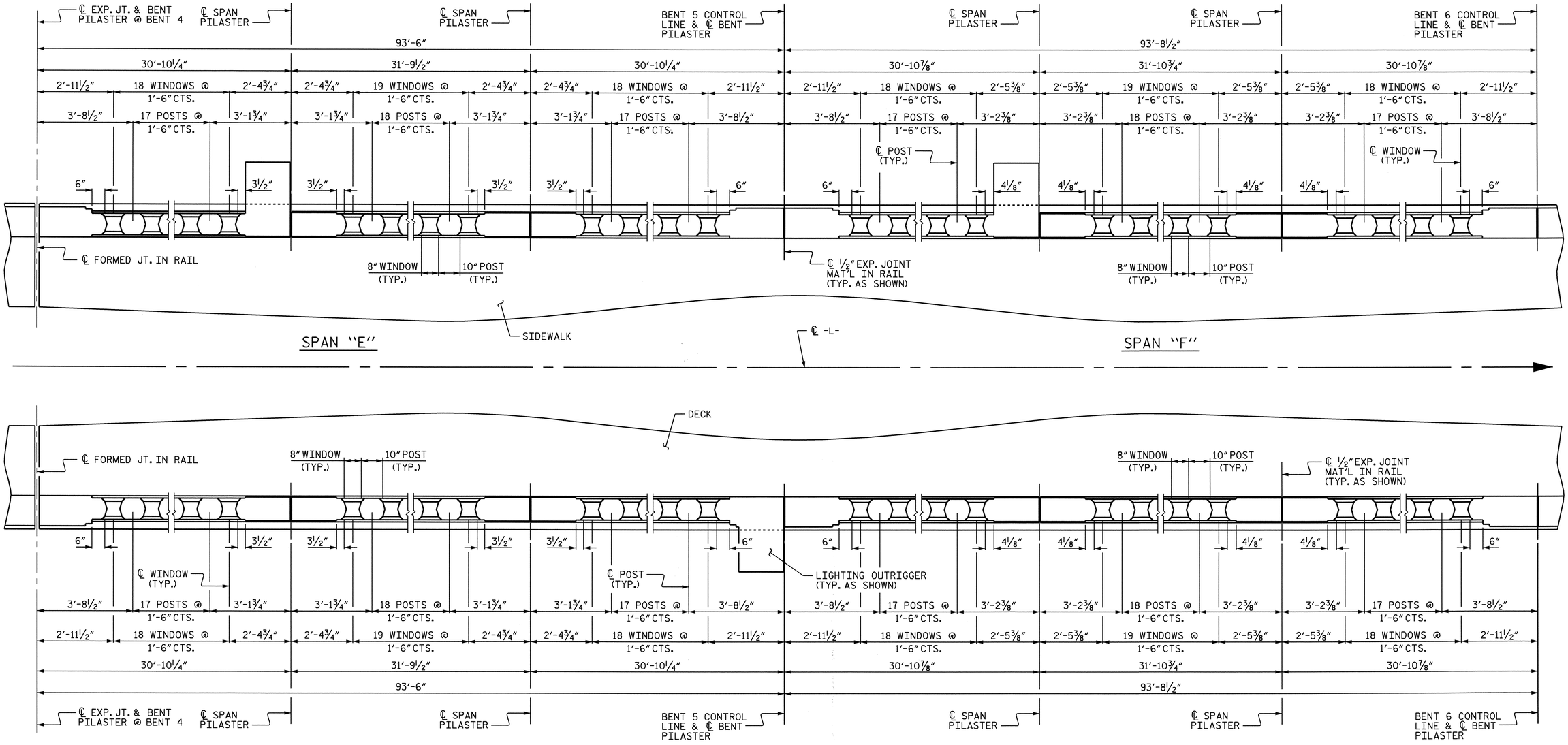

RAIL POST SPACING

PROJECT NO. B-2532

CRAVEN COUNTY

STATION: 31+21.29 -L-

SHEET 3 OF 12

NOTE:

FOR PILASTER DETAILS, SEE "CLASSIC CONCRETE BRIDGE RAIL DETAILS", SHEETS.

FOR LIGHTING OUTRIGGER REINFORCING STEEL AND DETAILS, SEE "LIGHTING OUTRIGGER" SHEET.

NORTH CAROLINA PROFESSIONAL SEAL 21638 ENGINEER LAURA E. SUTTON
Laura E. Sutton
11/30/06

STATE OF NORTH CAROLINA
DEPARTMENT OF TRANSPORTATION
RALEIGH

SUPERSTRUCTURE
CLASSIC CONCRETE BRIDGE RAIL POST SPACING
SPANS "E" AND "F"

REVISIONS						SHEET NO.
NO.	BY:	DATE:	NO.	BY:	DATE:	S-59
1			3			TOTAL SHEETS
2			4			348

DRAWN BY : P.C. BREWER DATE : 5/16/06
CHECKED BY : A.S. CALLAWAY DATE : 9/22/06

24-OCT-2006 14:54
r:\Structures\pbrewer\Microstation\B2532_sd_BR_01.dgn
LSUTTON

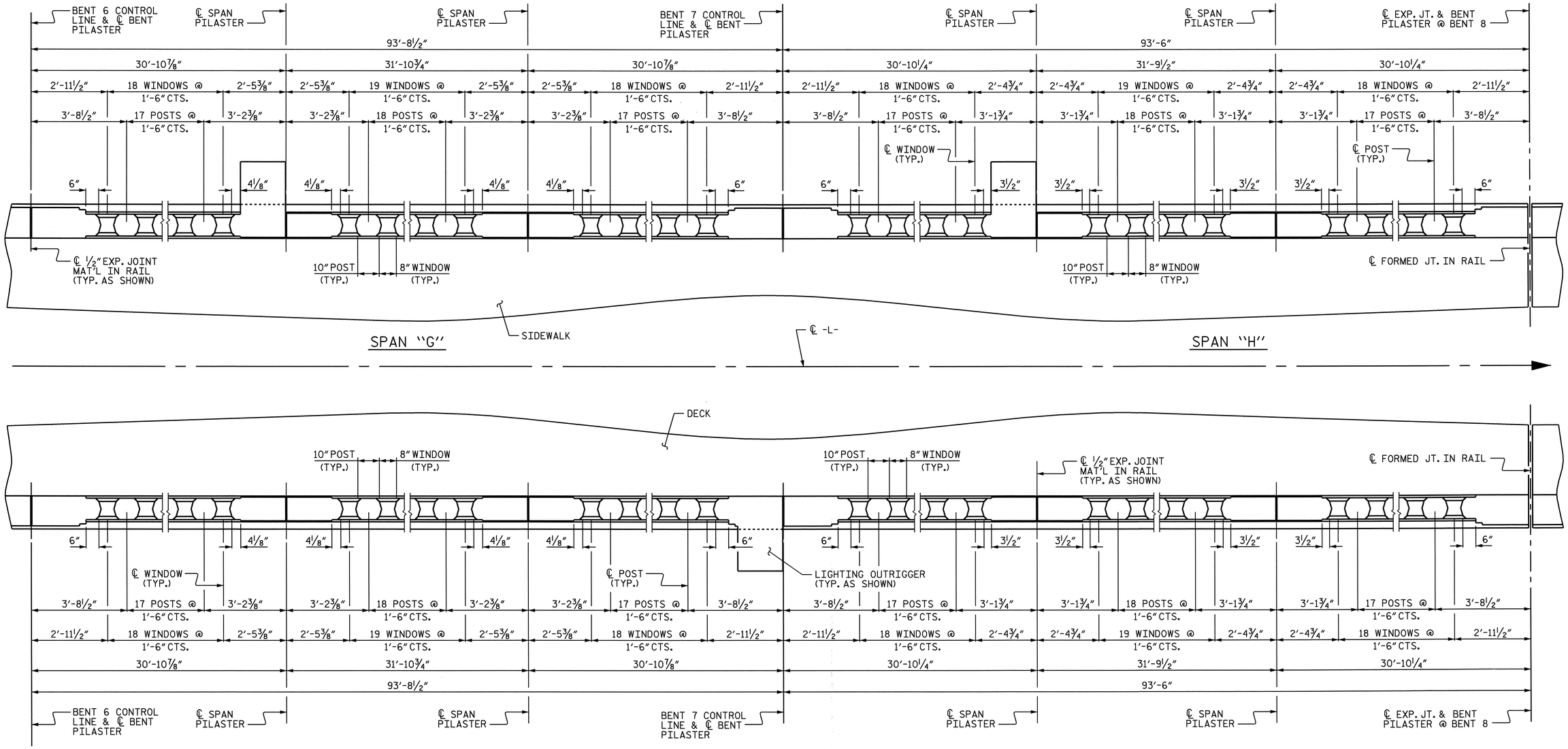

RAIL POST SPACING

PROJECT NO. B-2532

CRAVEN COUNTY

STATION: 31+21.29 -L-

SHEET 4 OF 12

NOTE:

FOR PILASTER DETAILS, SEE "CLASSIC CONCRETE BRIDGE RAIL DETAILS", SHEETS.

FOR LIGHTING OUTRIGGER REINFORCING STEEL AND DETAILS, SEE "LIGHTING OUTRIGGER" SHEET.

NORTH CAROLINA PROFESSIONAL SEAL 21638 ENGINEER LAURA E. SUTTON

11/30/06

STATE OF NORTH CAROLINA
DEPARTMENT OF TRANSPORTATION
RALEIGH

SUPERSTRUCTURE
CLASSIC CONCRETE BRIDGE RAIL POST SPACING
SPANS "G" AND "H"

REVISIONS						SHEET NO.
NO.	BY:	DATE:	NO.	BY:	DATE:	S-60
1			3			TOTAL SHEETS
2			4			348

DRAWN BY : P.C. BREWER DATE : 5/16/06
CHECKED BY : A.S. CALLAWAY DATE : 9/22/06

24-OCT-2006 14:54
r:\Structures\pbrewer\Microstation\B2532_sd_BR_01.dgn
LSUTTON

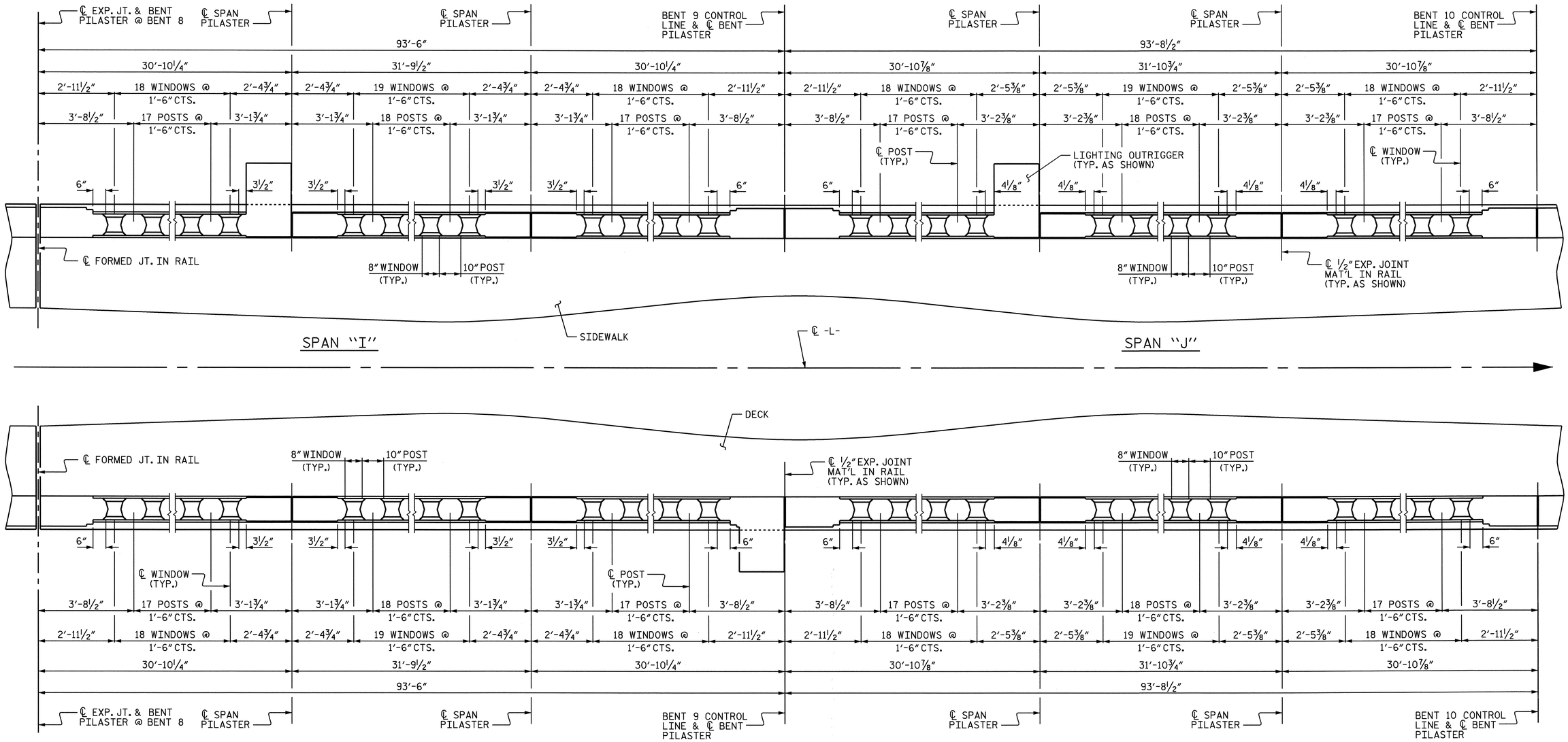

RAIL POST SPACING

NOTE:

FOR PILASTER DETAILS, SEE "CLASSIC CONCRETE BRIDGE RAIL DETAILS", SHEETS.

FOR LIGHTING OUTRIGGER REINFORCING STEEL AND DETAILS, SEE "LIGHTING OUTRIGGER" SHEET.

PROJECT NO. B-2532

CRAVEN COUNTY

STATION: 31+21.29 -L-

SHEET 5 OF 12

STATE OF NORTH CAROLINA
DEPARTMENT OF TRANSPORTATION
RALEIGH

SUPERSTRUCTURE
CLASSIC CONCRETE BRIDGE RAIL POST SPACING
SPANS "I" AND "J"

NORTH CAROLINA PROFESSIONAL SEAL 21638 ENGINEER LAURA E. SUTTON
11/30/06

REVISIONS						SHEET NO.
NO.	BY:	DATE:	NO.	BY:	DATE:	S-61
1			3			TOTAL SHEETS
2			4			348

DRAWN BY : P.C. BREWER DATE : 5/16/06
CHECKED BY : A.S. CALLAWAY DATE : 9/22/06

24-OCT-2006 14:53
r:\Structures\pbrewer\Microstation\B2532_sd_BR_01.dgn
LSUTTON

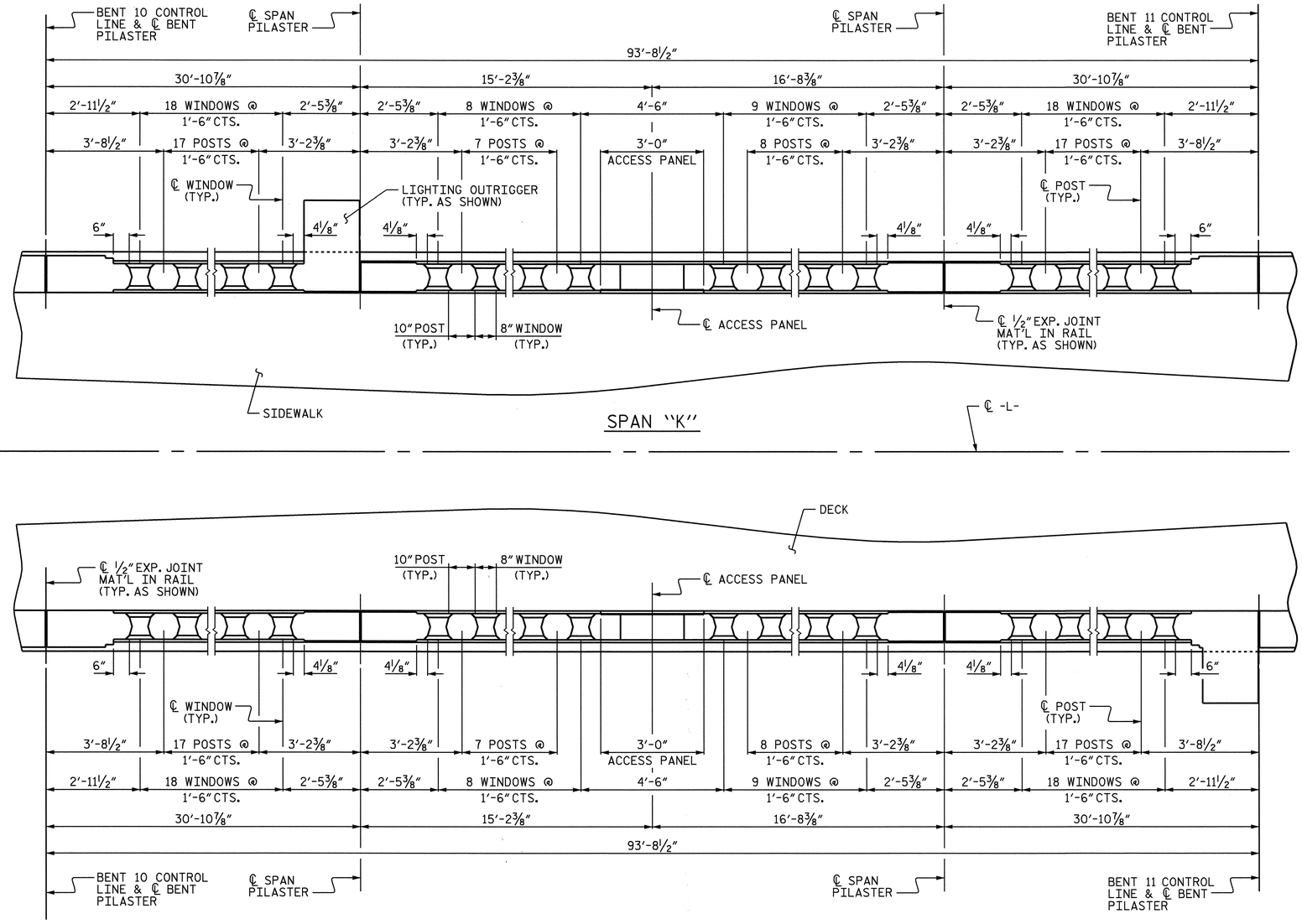

RAIL POST SPACING

NOTE:

FOR PILASTER DETAILS, SEE "CLASSIC CONCRETE BRIDGE RAIL DETAILS", SHEETS.

FOR LIGHTING OUTRIGGER REINFORCING STEEL AND DETAILS, SEE "LIGHTING OUTRIGGER" SHEET.

FOR ACCESS PANEL DETAILS, SEE "CLASSIC CONCRETE BRIDGE RAIL DETAILS" SHEET 4 OF 4.

PROJECT NO. B-2532

CRAVEN COUNTY

STATION: 31+21.29 -L-

SHEET 6 OF 12

STATE OF NORTH CAROLINA
DEPARTMENT OF TRANSPORTATION
RALEIGH

SUPERSTRUCTURE
CLASSIC CONCRETE BRIDGE RAIL POST SPACING
SPAN "K"

NORTH CAROLINA PROFESSIONAL SEAL 21638 ENGINEER LAURA E. SUTTON
11/30/06

REVISIONS						SHEET NO.
NO.	BY:	DATE:	NO.	BY:	DATE:	S-62
1			3			TOTAL SHEETS
2			4			348

DRAWN BY : P.C. BREWER DATE : 5/16/06
CHECKED BY : A.S. CALLAWAY DATE : 9/22/06

24-OCT-2006 14:53
r:\Structures\pbrewer\Microstation\B2532_sd_BR_01.dgn
LSUTTON

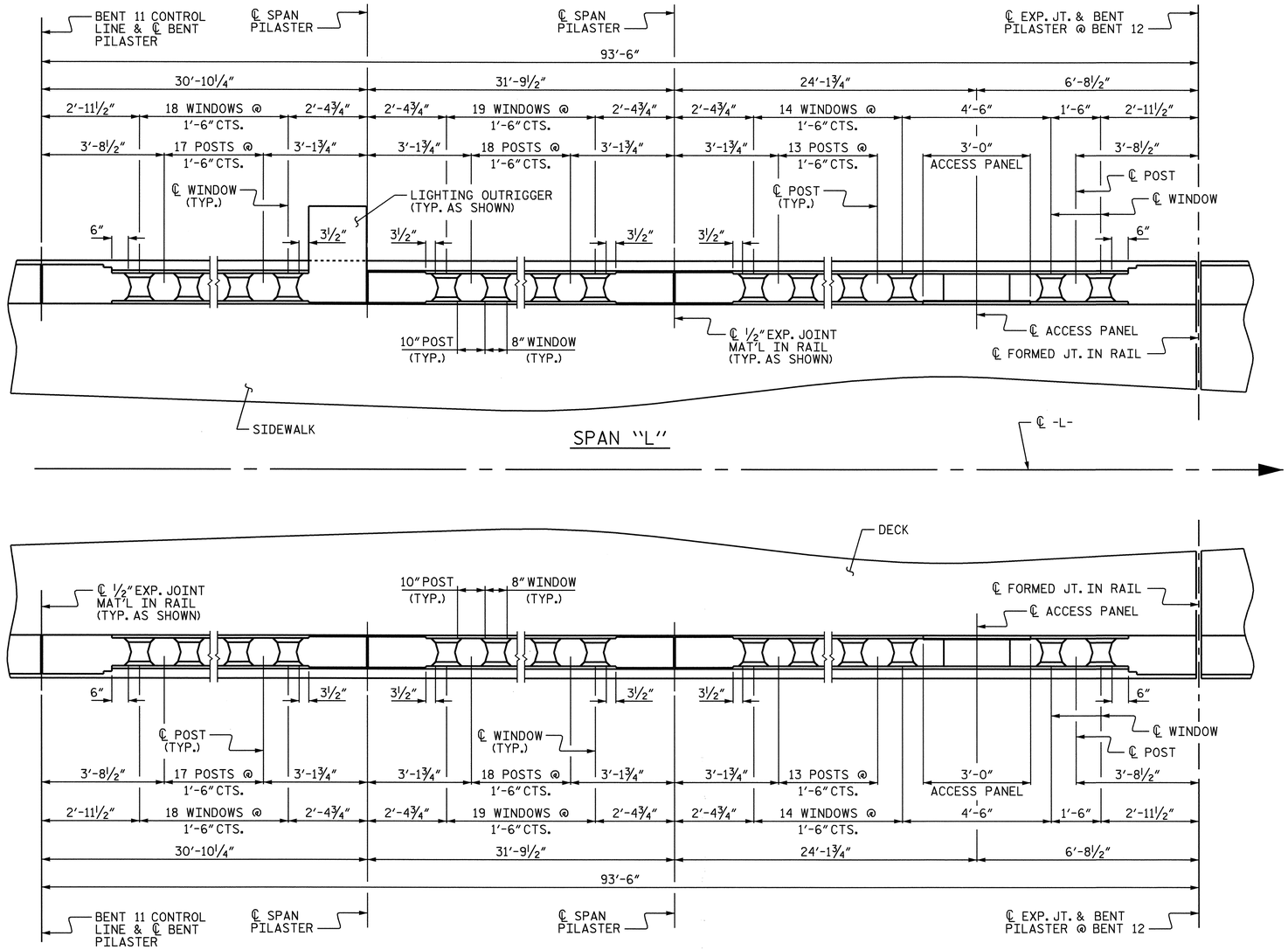

RAIL POST SPACING

NOTE:

FOR PILASTER DETAILS, SEE "CLASSIC CONCRETE BRIDGE RAIL DETAILS", SHEETS.

FOR LIGHTING OUTRIGGER REINFORCING STEEL AND DETAILS, SEE "LIGHTING OUTRIGGER" SHEET.

FOR ACCESS PANEL DETAILS, SEE "CLASSIC CONCRETE BRIDGE RAIL DETAILS" SHEET 4 OF 4.

PROJECT NO. B-2532

CRAVEN COUNTY

STATION: 31+21.29 -L-

SHEET 7 OF 12

STATE OF NORTH CAROLINA
DEPARTMENT OF TRANSPORTATION
RALEIGH

SUPERSTRUCTURE
CLASSIC CONCRETE BRIDGE RAIL POST SPACING
SPAN "L"

NORTH CAROLINA PROFESSIONAL SEAL 21638 ENGINEER LAURA E. SUTTON
Laura E. Sutton 11/30/06

REVISIONS						SHEET NO.
NO.	BY:	DATE:	NO.	BY:	DATE:	S-63
1			3			TOTAL SHEETS
2			4			348

DRAWN BY : P.C. BREWER DATE : 5/16/06
CHECKED BY : A.S. CALLAWAY DATE : 9/22/06

24-OCT-2006 14:53
r:\Structures\pbrewer\Microstation\B2532_sd_BR_01.dgn
LSUTTON

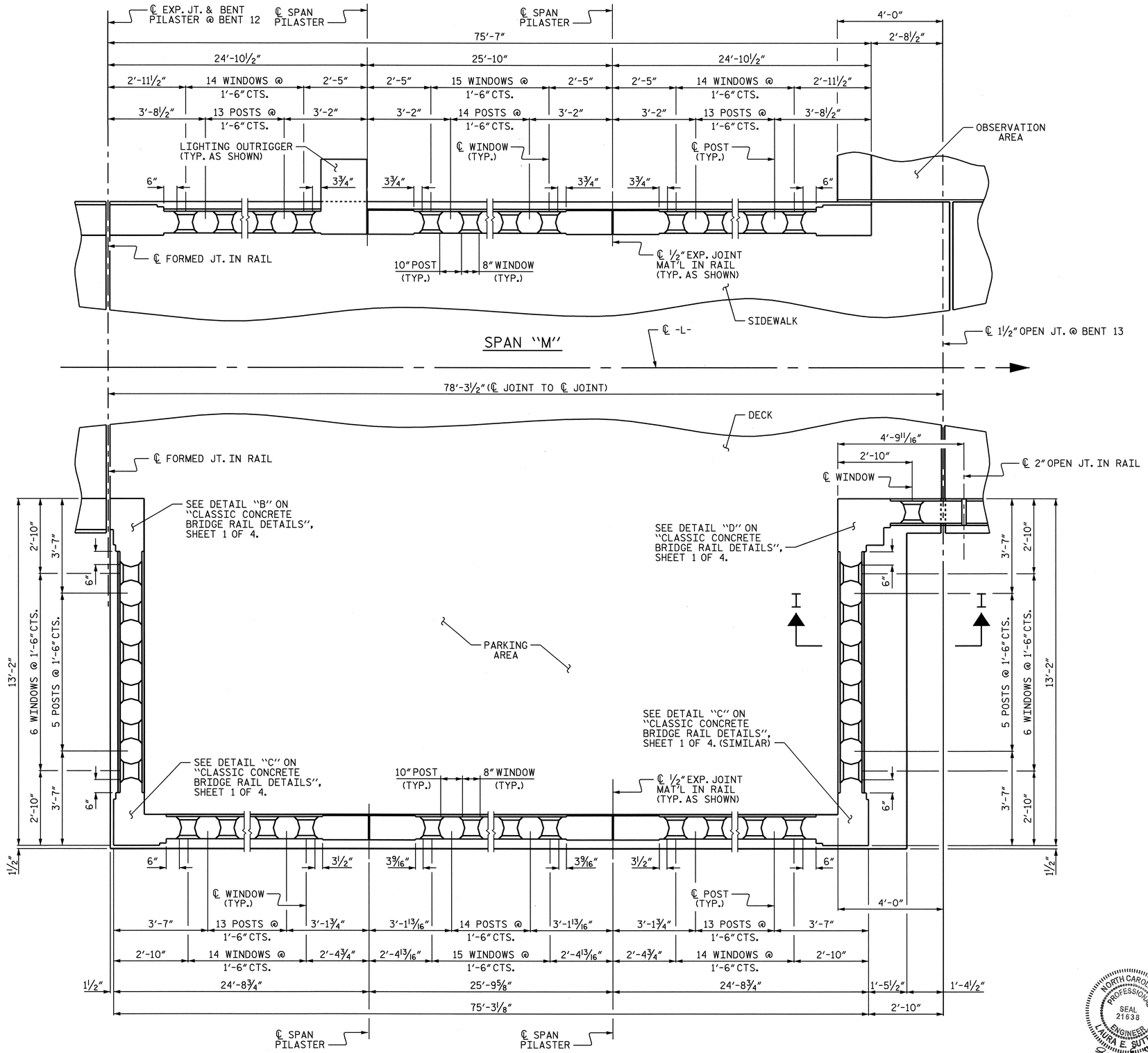

RAIL POST SPACING

NOTE:

FOR PILASTER DETAILS, SEE "CLASSIC CONCRETE BRIDGE RAIL DETAILS", SHEETS.

FOR LIGHTING OUTRIGGER REINFORCING STEEL AND DETAILS, SEE "LIGHTING OUTRIGGER" SHEET.

FOR SECTION I-I SEE "CLASSIC CONCRETE BRIDGE RAIL REINFORCING STEEL" SHEET 8 OF 12.

PROJECT NO. B-2532

CRAVEN COUNTY

STATION: 31+21.29 -L-

SHEET 8 OF 12

STATE OF NORTH CAROLINA
DEPARTMENT OF TRANSPORTATION
RALEIGH

SUPERSTRUCTURE
CLASSIC CONCRETE BRIDGE RAIL POST SPACING
SPAN "M"

NORTH CAROLINA PROFESSIONAL SEAL 21638 ENGINEER LAURA E. SUTTON
2/8/07

REVISIONS						SHEET NO.
NO.	BY:	DATE:	NO.	BY:	DATE:	S-64
1			3			TOTAL SHEETS
2			4			348

DRAWN BY : P.C. BREWER DATE : 5/16/06
CHECKED BY : A.S. CALLAWAY DATE : 9/22/06

08-FEB-2007 16:26
R:\Structures\pbrewer\Microstation\B2532_sd_BR_01.dgn
LSUTTON

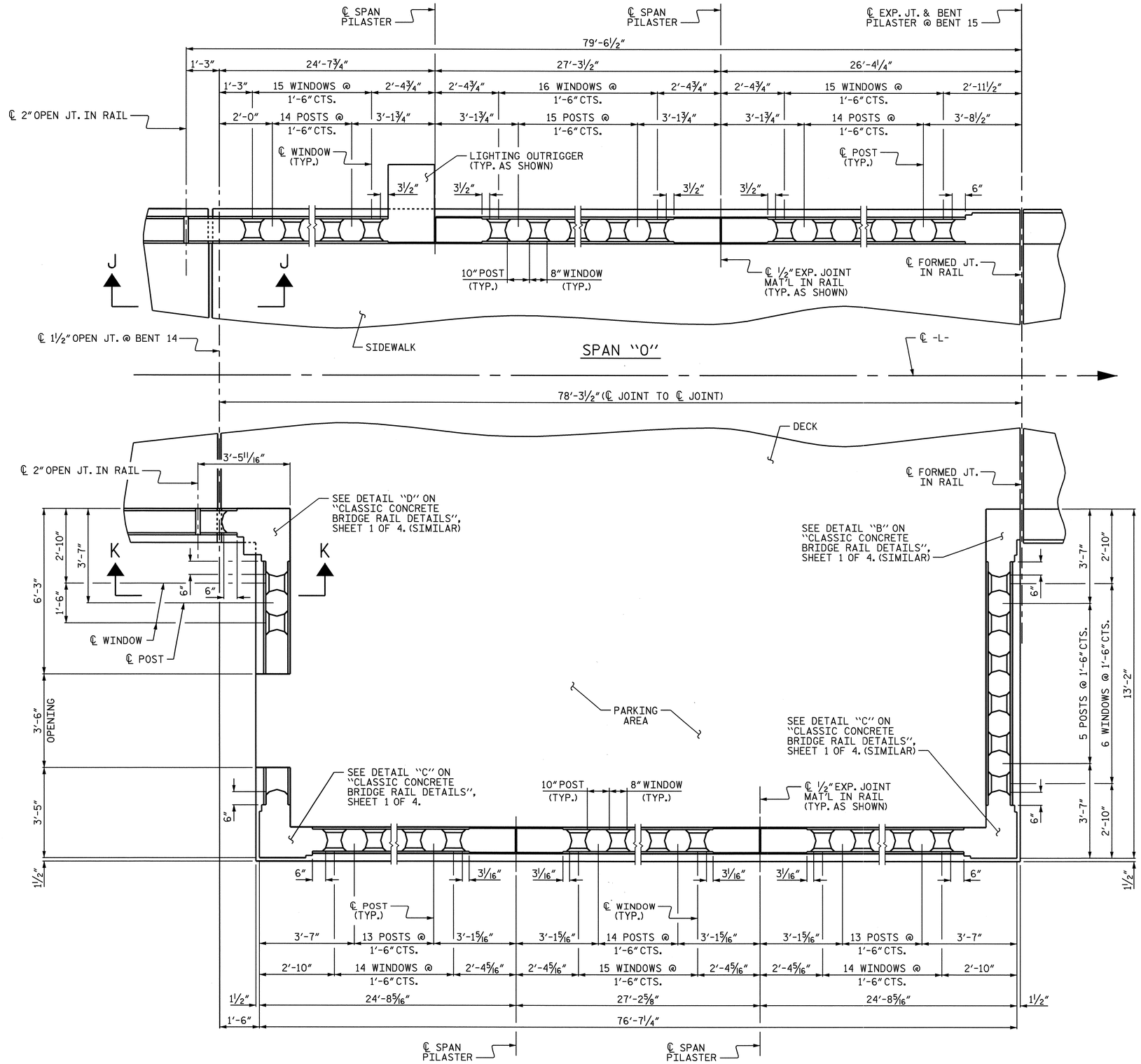

RAIL POST SPACING

NOTE:

FOR PILASTER DETAILS, SEE "CLASSIC CONCRETE BRIDGE RAIL DETAILS", SHEETS.

FOR LIGHTING OUTRIGGER REINFORCING STEEL AND DETAILS, SEE "LIGHTING OUTRIGGER" SHEET.

FOR SECTION K-K SEE "CLASSIC CONCRETE BRIDGE RAIL REINFORCING STEEL" SHEET 9 OF 12.

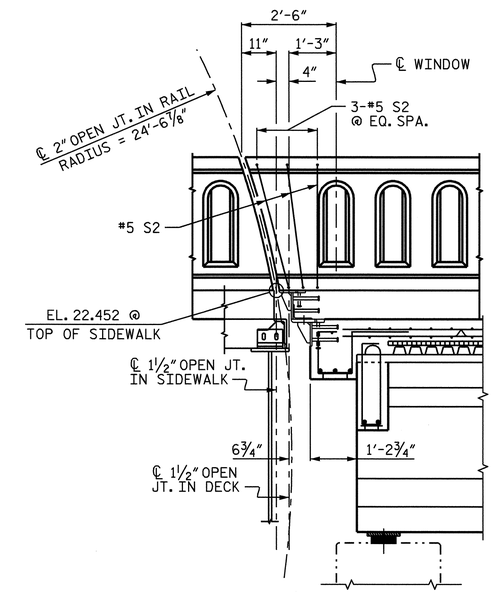

SECTION J-J

PROJECT NO. B-2532

CRAVEN COUNTY

STATION: 31+21.29 -L-

SHEET 9 OF 12

STATE OF NORTH CAROLINA
DEPARTMENT OF TRANSPORTATION
RALEIGH

SUPERSTRUCTURE
CLASSIC CONCRETE BRIDGE RAIL POST SPACING
SPAN "O"

NORTH CAROLINA PROFESSIONAL SEAL 21638 ENGINEER LAURA E. SUTTON
2/8/07

REVISIONS						SHEET NO.
NO.	BY:	DATE:	NO.	BY:	DATE:	S-65
1			3			TOTAL SHEETS
2			4			348

DRAWN BY : P.C. BREWER DATE : 5/16/06
CHECKED BY : A.S. CALLAWAY DATE : 9/22/06

08-FEB-2007 16:27
R:\Structures\pbrewer\Microstation\B2532_sd_BR_01.dgn
LSUTTON

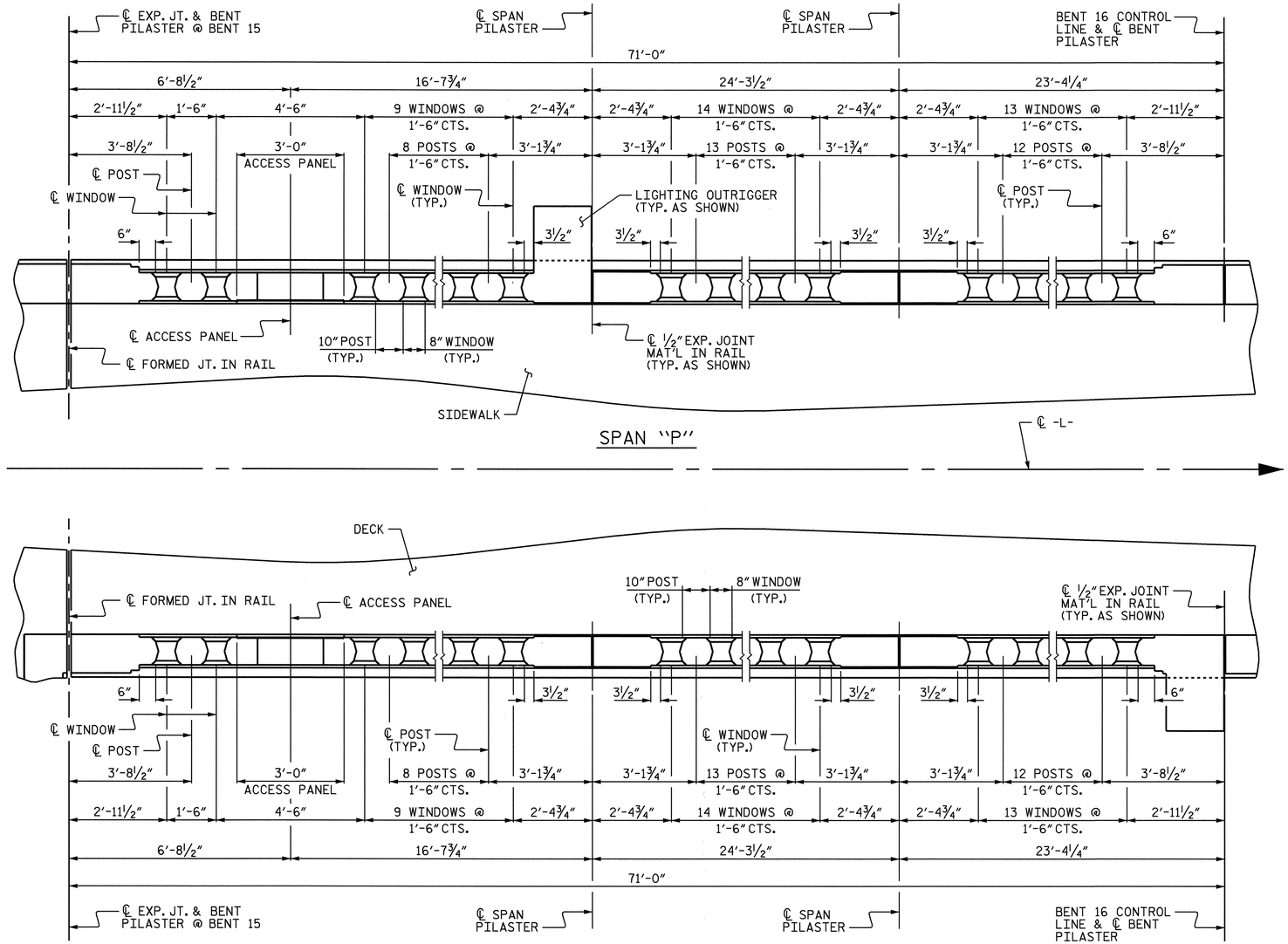

RAIL POST SPACING

NOTE:

FOR PILASTER DETAILS, SEE "CLASSIC CONCRETE BRIDGE RAIL DETAILS", SHEETS.

FOR LIGHTING OUTRIGGER REINFORCING STEEL AND DETAILS, SEE "LIGHTING OUTRIGGER" SHEET.

FOR ACCESS PANEL DETAILS, SEE "CLASSIC CONCRETE BRIDGE RAIL DETAILS" SHEET 4 OF 4.

PROJECT NO. B-2532

CRAVEN COUNTY

STATION: 31+21.29 -L-

SHEET 10 OF 12

STATE OF NORTH CAROLINA
DEPARTMENT OF TRANSPORTATION
RALEIGH

SUPERSTRUCTURE
CLASSIC CONCRETE BRIDGE RAIL POST SPACING
SPAN "P"

NORTH CAROLINA PROFESSIONAL SEAL 21638 ENGINEER LAURA E. SUTTON
11/30/06

REVISIONS						SHEET NO.
NO.	BY:	DATE:	NO.	BY:	DATE:	S-66
1			3			TOTAL SHEETS
2			4			348

DRAWN BY : P.C. BREWER DATE : 5/16/06
CHECKED BY : A.S. CALLAWAY DATE : 9/22/06

24-OCT-2006 14:53
r:\Structures\pbrewer\Microstation\B2532_sd_BR_01.dgn
LSUTTON

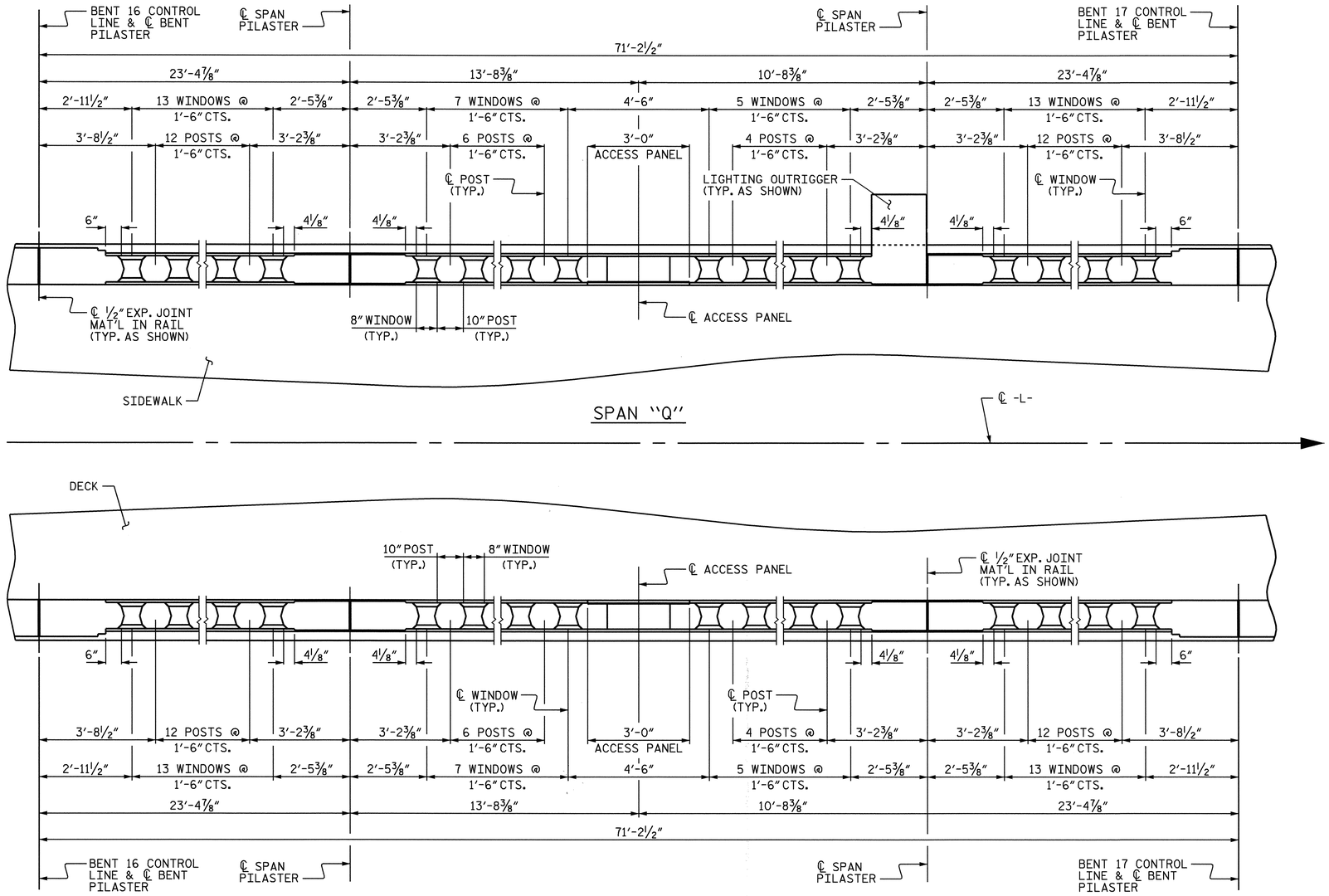

RAIL POST SPACING

NOTE:

FOR PILASTER DETAILS, SEE "CLASSIC CONCRETE BRIDGE RAIL DETAILS", SHEETS.

FOR LIGHTING OUTRIGGER REINFORCING STEEL AND DETAILS, SEE "LIGHTING OUTRIGGER" SHEET.

FOR ACCESS PANEL DETAILS, SEE "CLASSIC CONCRETE BRIDGE RAIL DETAILS" SHEET 4 OF 4.

PROJECT NO. B-2532

CRAVEN COUNTY

STATION: 31+21.29 -L-

SHEET 11 OF 12

STATE OF NORTH CAROLINA
DEPARTMENT OF TRANSPORTATION
RALEIGH

SUPERSTRUCTURE
CLASSIC CONCRETE BRIDGE RAIL POST SPACING
SPAN "Q"

NORTH CAROLINA PROFESSIONAL SEAL 21638 ENGINEER LAURA E. SUTTON
Laura E. Sutton
11/30/06

REVISIONS						SHEET NO.
NO.	BY:	DATE:	NO.	BY:	DATE:	S-67
1			3			TOTAL SHEETS
2			4			348

DRAWN BY : P.C. BREWER DATE : 5/16/06
CHECKED BY : A.S. CALLAWAY DATE : 9/22/06

24-OCT-2006 14:53
r:\Structures\pbrewer\Microstation\B2532_sd_BR_01.dgn
LSUTTON

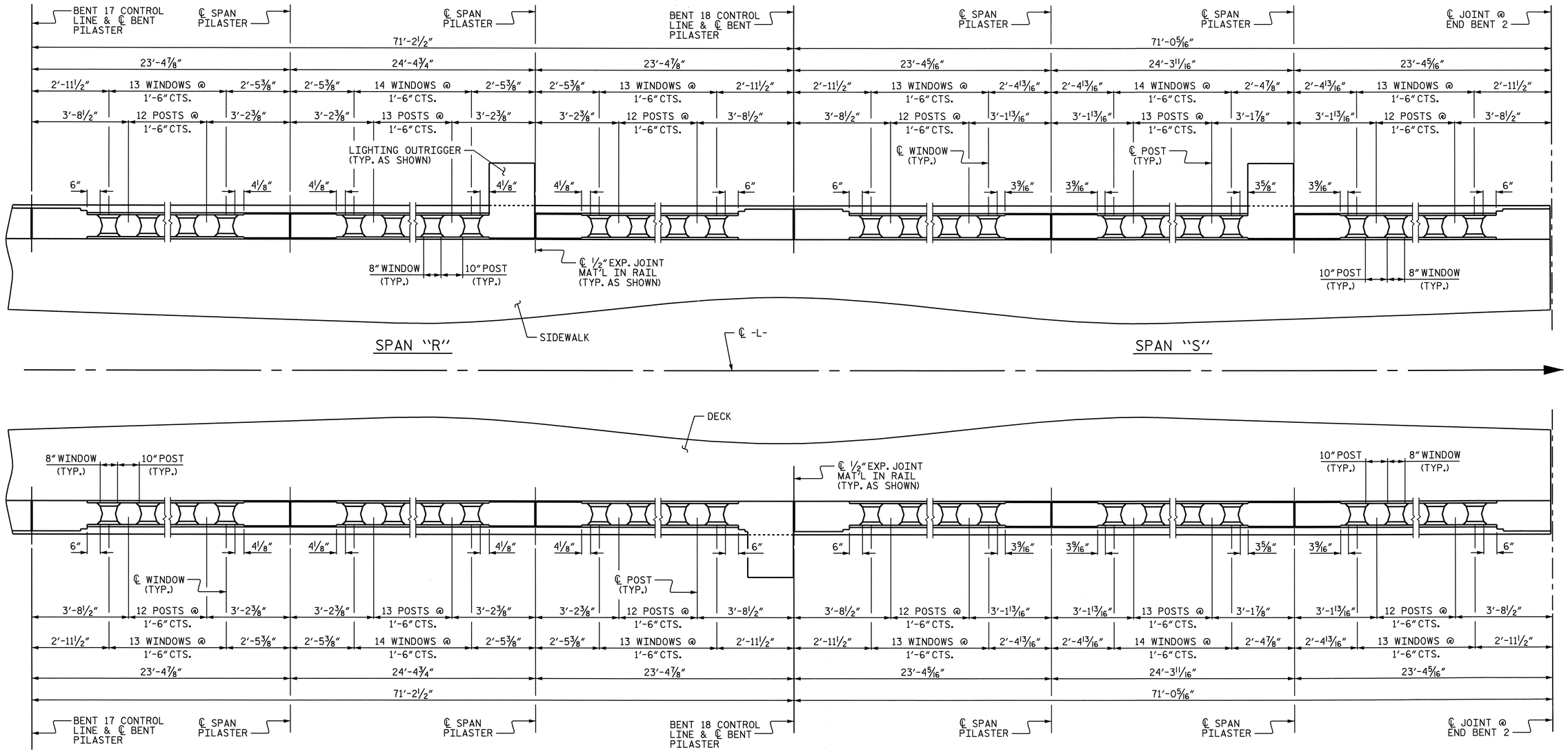

RAIL POST SPACING

PROJECT NO. B-2532

CRAVEN COUNTY

STATION: 31+21.29 -L-

SHEET 12 OF 12

NOTE:

FOR PILASTER DETAILS, SEE "CLASSIC CONCRETE BRIDGE RAIL DETAILS", SHEETS.

FOR LIGHTING OUTRIGGER REINFORCING STEEL AND DETAILS, SEE "LIGHTING OUTRIGGER" SHEET.

NORTH CAROLINA PROFESSIONAL SEAL 21638 ENGINEER LAURA E. SUTTON

11/30/06

STATE OF NORTH CAROLINA
DEPARTMENT OF TRANSPORTATION
RALEIGH

SUPERSTRUCTURE
CLASSIC CONCRETE BRIDGE RAIL POST SPACING
SPANS "R" AND "S"

REVISIONS						SHEET NO.
NO.	BY:	DATE:	NO.	BY:	DATE:	S-68
1			3			TOTAL SHEETS
2			4			348

DRAWN BY : P.C. BREWER DATE : 5/16/06
CHECKED BY : A.S. CALLAWAY DATE : 9/22/06

24-OCT-2006 14:52
r:\Structures\pbrewer\Microstation\B2532_sd_BR_01.dgn
LSUTTON

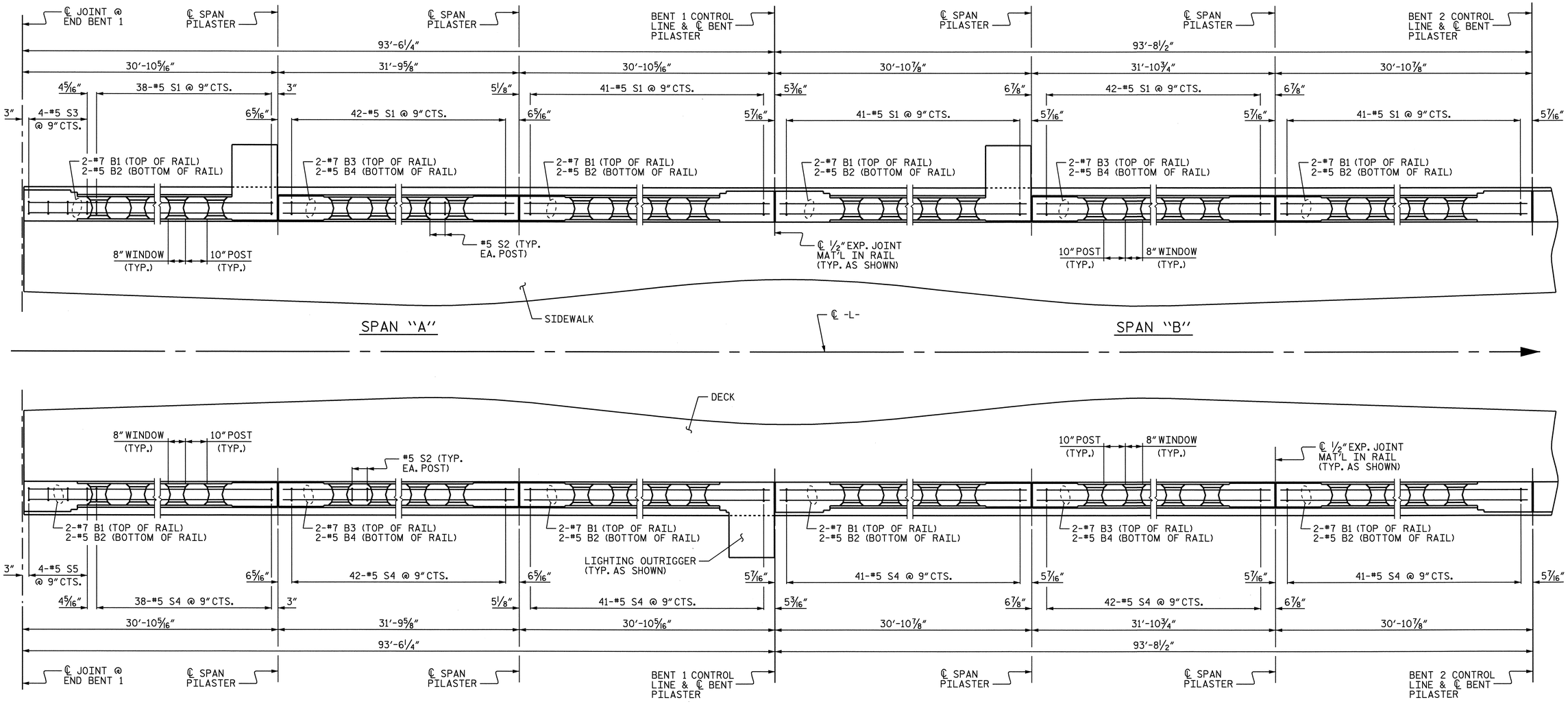

REINFORCING STEEL PLACEMENT

NOTES:

FOR LOCATION OF #5 S2 BARS IN PILASTERS, SEE "CLASSIC CONCRETE BRIDGE RAIL DETAILS", SHEET 1 OF 4.

THE #5 S3 AND #5 S5 BAR SHALL BE INSTALLED USING AN ADHESIVE ANCHORING SYSTEM AFTER THE SAWING THE JOINT. THE YIELD LOAD FOR THE #5 S3 AND #5 S5 BARS IS 18.6 KIPS. FIELD TESTING OF THE ADHESIVE BONDING SYSTEM IS NOT REQUIRED.

FOR LIGHTING OUTRIGGER REINFORCING STEEL AND DETAILS, SEE "LIGHTING OUTRIGGER" SHEET.

NORTH CAROLINA PROFESSIONAL SEAL 21638 ENGINEER LAURA E. SUTTON
Laura E. Sutton
11/30/06

PROJECT NO. B-2532
CRAVEN COUNTY
STATION: 31+21.29 -L-

SHEET 1 OF 12

STATE OF NORTH CAROLINA
DEPARTMENT OF TRANSPORTATION
RALEIGH

SUPERSTRUCTURE
CLASSIC CONCRETE BRIDGE RAIL REINFORCING STEEL
SPANS "A" AND "B"

REVISIONS						SHEET NO.
NO.	BY:	DATE:	NO.	BY:	DATE:	S-69
1			3			TOTAL SHEETS
2			4			348

DRAWN BY : P.C. BREWER DATE : 5/17/06
CHECKED BY : A.S. CALLAWAY DATE : 9/22/06

24-OCT-2006 14:52
r:\Structures\pbrewer\Microstation\B2532_sd_BR_01.dgn
LSUTTON

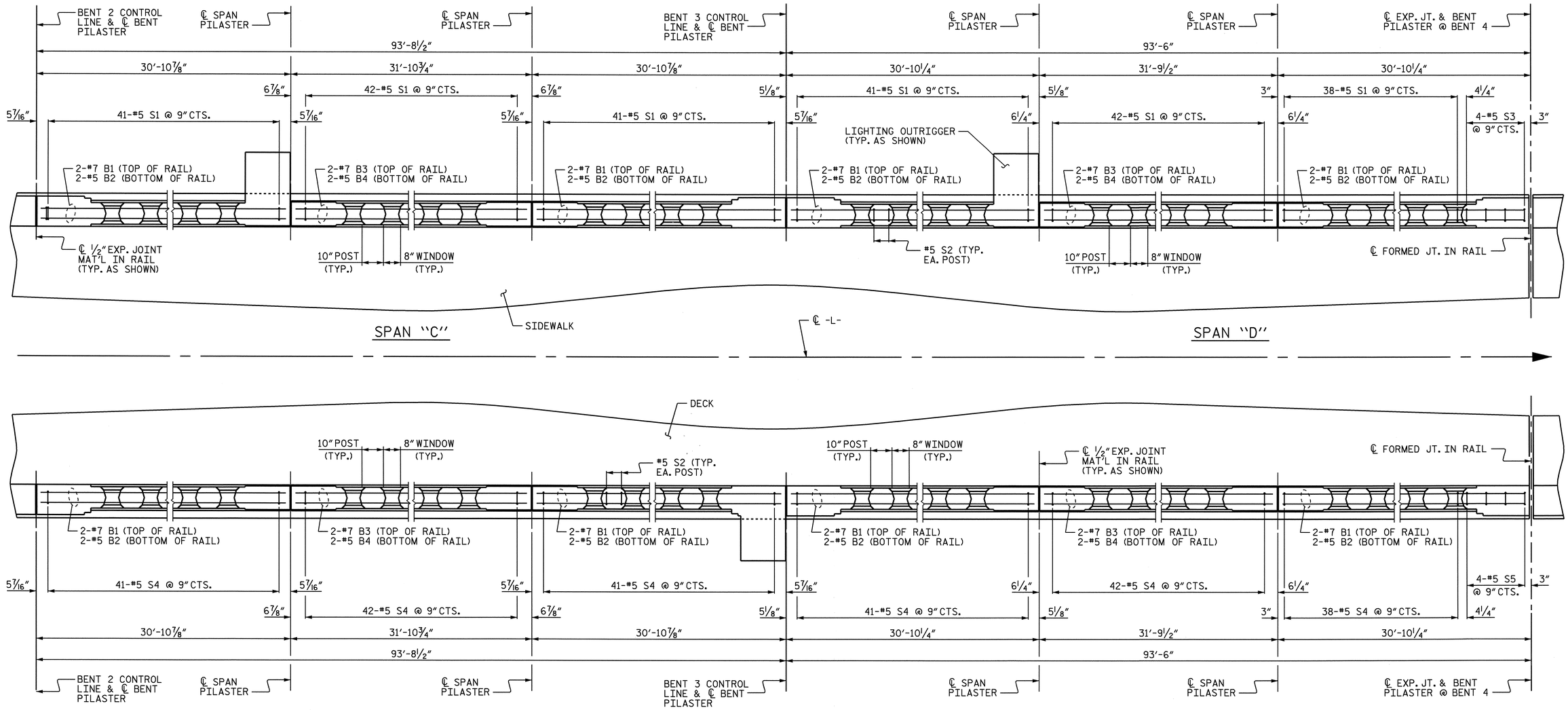

REINFORCING STEEL PLACEMENT

PROJECT NO. B-2532

CRAVEN COUNTY

STATION: 31+21.29 -L-

SHEET 2 OF 12

NOTES:

FOR LOCATION OF #5 S2 BARS IN PILASTERS, SEE "CLASSIC CONCRETE BRIDGE RAIL DETAILS", SHEET 1 OF 4.

THE #5 S3 AND #5 S5 BAR SHALL BE INSTALLED USING AN ADHESIVE ANCHORING SYSTEM AFTER THE SAWING THE JOINT. THE YIELD LOAD FOR THE #5 S3 AND #5 S5 BARS IS 18.6 KIPS. FIELD TESTING OF THE ADHESIVE BONDING SYSTEM IS NOT REQUIRED.

FOR LIGHTING OUTRIGGER REINFORCING STEEL AND DETAILS, SEE "LIGHTING OUTRIGGER" SHEET.

NORTH CAROLINA PROFESSIONAL SEAL 21638 ENGINEER LAURA E. SUTTON
Laura E. Sutton
11/30/06

STATE OF NORTH CAROLINA
DEPARTMENT OF TRANSPORTATION
RALEIGH

SUPERSTRUCTURE
CLASSIC CONCRETE BRIDGE RAIL REINFORCING STEEL
SPANS "C" AND "D"

REVISIONS						SHEET NO.
NO.	BY:	DATE:	NO.	BY:	DATE:	S-70
1			3			TOTAL SHEETS
2			4			348

DRAWN BY : P.C. BREWER DATE : 5/17/06
CHECKED BY : A.S. CALLAWAY DATE : 9/22/06

24-OCT-2006 14:51
r:\Structures\pbrewer\Microstation\B2532_sd_BR_01.dgn
LSUTTON

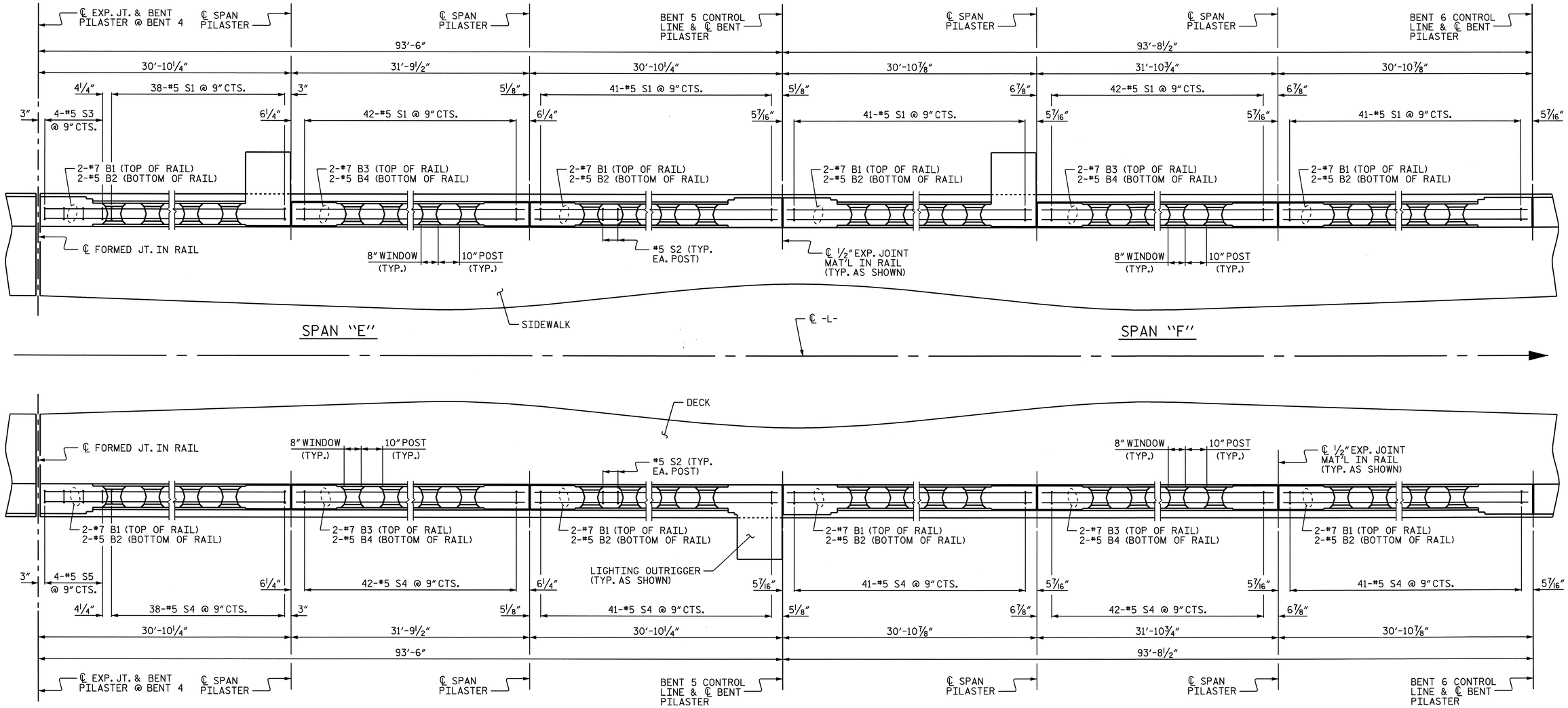

REINFORCING STEEL PLACEMENT

PROJECT NO. B-2532

CRAVEN COUNTY

STATION: 31+21.29 -L-

SHEET 3 OF 12

NOTES:

FOR LOCATION OF #5 S2 BARS IN PILASTERS, SEE "CLASSIC CONCRETE BRIDGE RAIL DETAILS", SHEET 1 OF 4.

THE #5 S3 AND #5 S5 BAR SHALL BE INSTALLED USING AN ADHESIVE ANCHORING SYSTEM AFTER THE SAWING THE JOINT. THE YIELD LOAD FOR THE #5 S3 AND #5 S5 BARS IS 18.6 KIPS. FIELD TESTING OF THE ADHESIVE BONDING SYSTEM IS NOT REQUIRED.

FOR LIGHTING OUTRIGGER REINFORCING STEEL AND DETAILS, SEE "LIGHTING OUTRIGGER" SHEET.

NORTH CAROLINA PROFESSIONAL SEAL 21638 ENGINEER LAURA E. SUTTON

Laura E. Sutton 11/30/06

STATE OF NORTH CAROLINA
DEPARTMENT OF TRANSPORTATION
RALEIGH

SUPERSTRUCTURE

CLASSIC CONCRETE BRIDGE RAIL REINFORCING STEEL

SPANS "E" AND "F"

REVISIONS						SHEET NO.
NO.	BY:	DATE:	NO.	BY:	DATE:	S-71
1			3			TOTAL SHEETS
2			4			348

DRAWN BY : P.C. BREWER DATE : 5/17/06
CHECKED BY : A.S. CALLAWAY DATE : 9/22/06

24-OCT-2006 14:51
r:\Structures\pbrewer\Microstation\B2532_sd_BR_01.dgn
LSUTTON

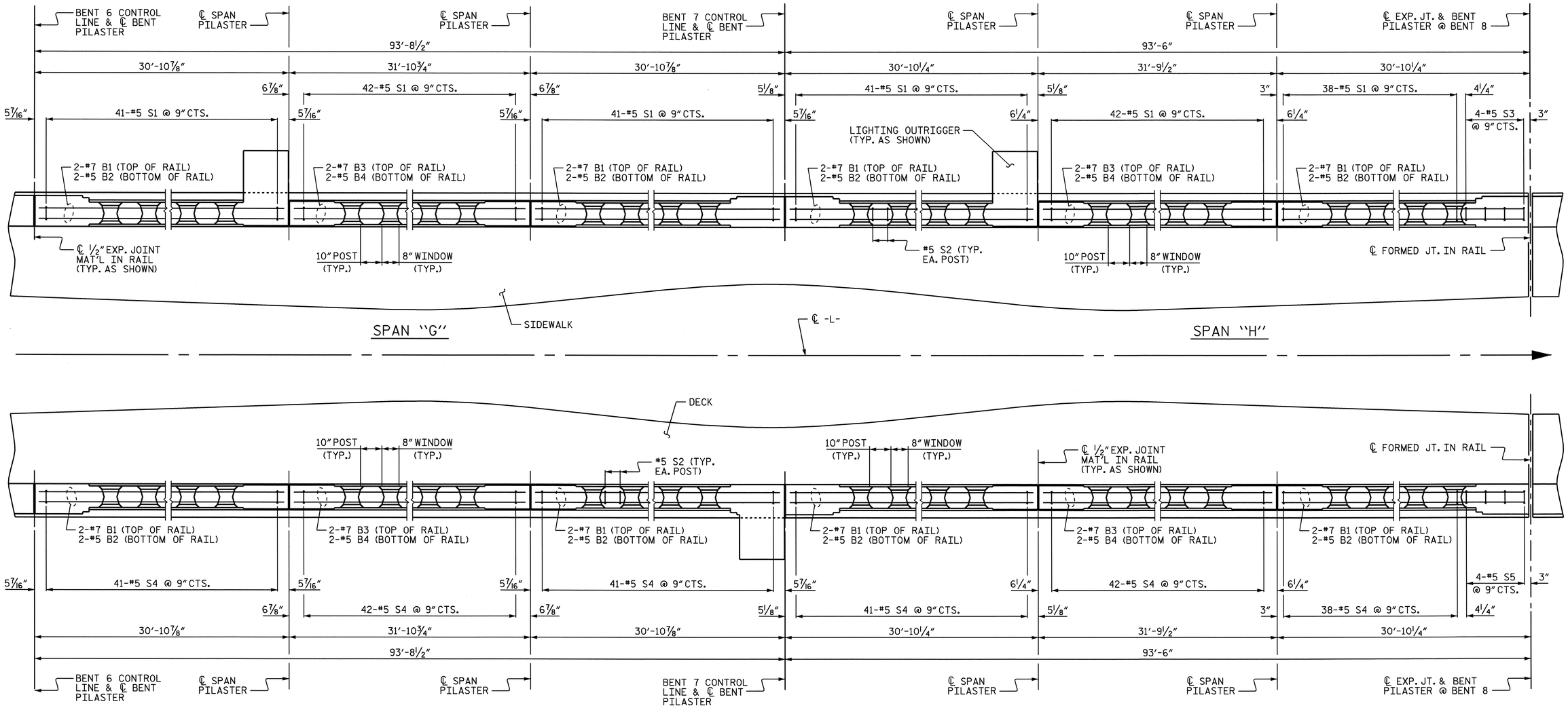

REINFORCING STEEL PLACEMENT

PROJECT NO. B-2532

CRAVEN COUNTY

STATION: 31+21.29 -L-

SHEET 4 OF 12

NOTES:

FOR LOCATION OF #5 S2 BARS IN PILASTERS, SEE "CLASSIC CONCRETE BRIDGE RAIL DETAILS", SHEET 1 OF 4.

THE #5 S3 AND #5 S5 BAR SHALL BE INSTALLED USING AN ADHESIVE ANCHORING SYSTEM AFTER THE SAWING THE JOINT. THE YIELD LOAD FOR THE #5 S3 AND #5 S5 BARS IS 18.6 KIPS. FIELD TESTING OF THE ADHESIVE BONDING SYSTEM IS NOT REQUIRED.

FOR LIGHTING OUTRIGGER REINFORCING STEEL AND DETAILS, SEE "LIGHTING OUTRIGGER" SHEET.

NORTH CAROLINA PROFESSIONAL SEAL 21638 ENGINEER LAURA E. SUTTON
11/30/06

STATE OF NORTH CAROLINA
DEPARTMENT OF TRANSPORTATION
RALEIGH

SUPERSTRUCTURE
CLASSIC CONCRETE BRIDGE RAIL REINFORCING STEEL
SPANS "G" AND "H"

REVISIONS						SHEET NO.
NO.	BY:	DATE:	NO.	BY:	DATE:	S-72
1			3			TOTAL SHEETS
2			4			348

DRAWN BY : P.C. BREWER DATE : 5/17/06
CHECKED BY : A.S. CALLAWAY DATE : 9/22/06

24-OCT-2006 14:51
r:\Structures\pbrewer\Microstation\B2532_sd_BR_01.dgn
LSUTTON

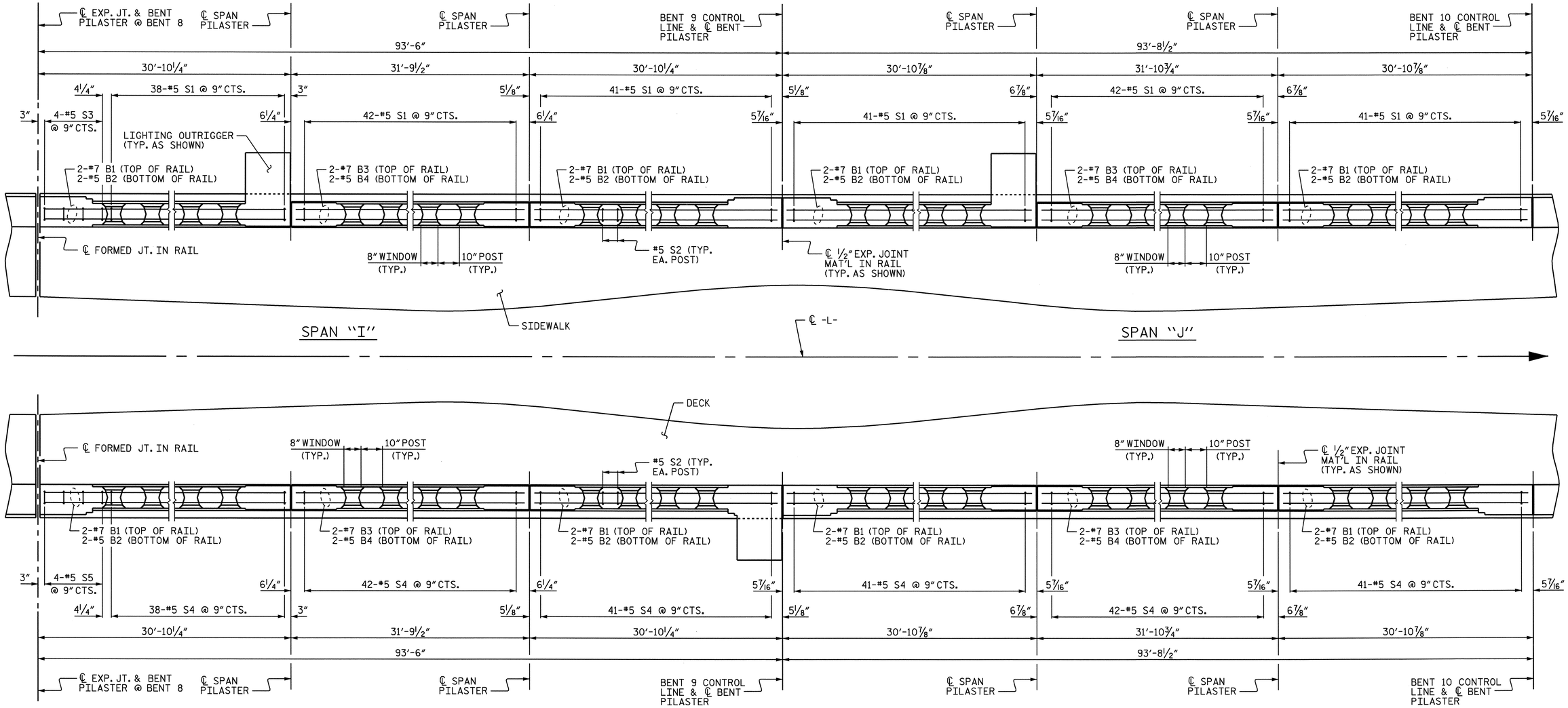

REINFORCING STEEL PLACEMENT

NOTES:

FOR LOCATION OF #5 S2 BARS IN PILASTERS, SEE "CLASSIC CONCRETE BRIDGE RAIL DETAILS", SHEET 1 OF 4.

THE #5 S3 AND #5 S5 BAR SHALL BE INSTALLED USING AN ADHESIVE ANCHORING SYSTEM AFTER THE SAWING THE JOINT. THE YIELD LOAD FOR THE #5 S3 AND #5 S5 BARS IS 18.6 KIPS. FIELD TESTING OF THE ADHESIVE BONDING SYSTEM IS NOT REQUIRED.

FOR LIGHTING OUTRIGGER REINFORCING STEEL AND DETAILS, SEE "LIGHTING OUTRIGGER" SHEET.

NORTH CAROLINA PROFESSIONAL SEAL 21638 ENGINEER LAURA E. SUTTON
11/30/06

PROJECT NO. B-2532
CRAVEN COUNTY
STATION: 31+21.29 -L-

SHEET 5 OF 12

STATE OF NORTH CAROLINA
DEPARTMENT OF TRANSPORTATION
RALEIGH

SUPERSTRUCTURE
CLASSIC CONCRETE BRIDGE RAIL REINFORCING STEEL
SPANS "I" AND "J"

REVISIONS						SHEET NO.
NO.	BY:	DATE:	NO.	BY:	DATE:	S-73
1			3			TOTAL SHEETS
2			4			348

DRAWN BY : P.C. BREWER DATE : 5/17/06
CHECKED BY : A.S. CALLAWAY DATE : 9/22/06

24-OCT-2006 14:51
r:\Structures\pbrewer\Microstation\B2532_sd_BR_01.dgn
LSUTTON

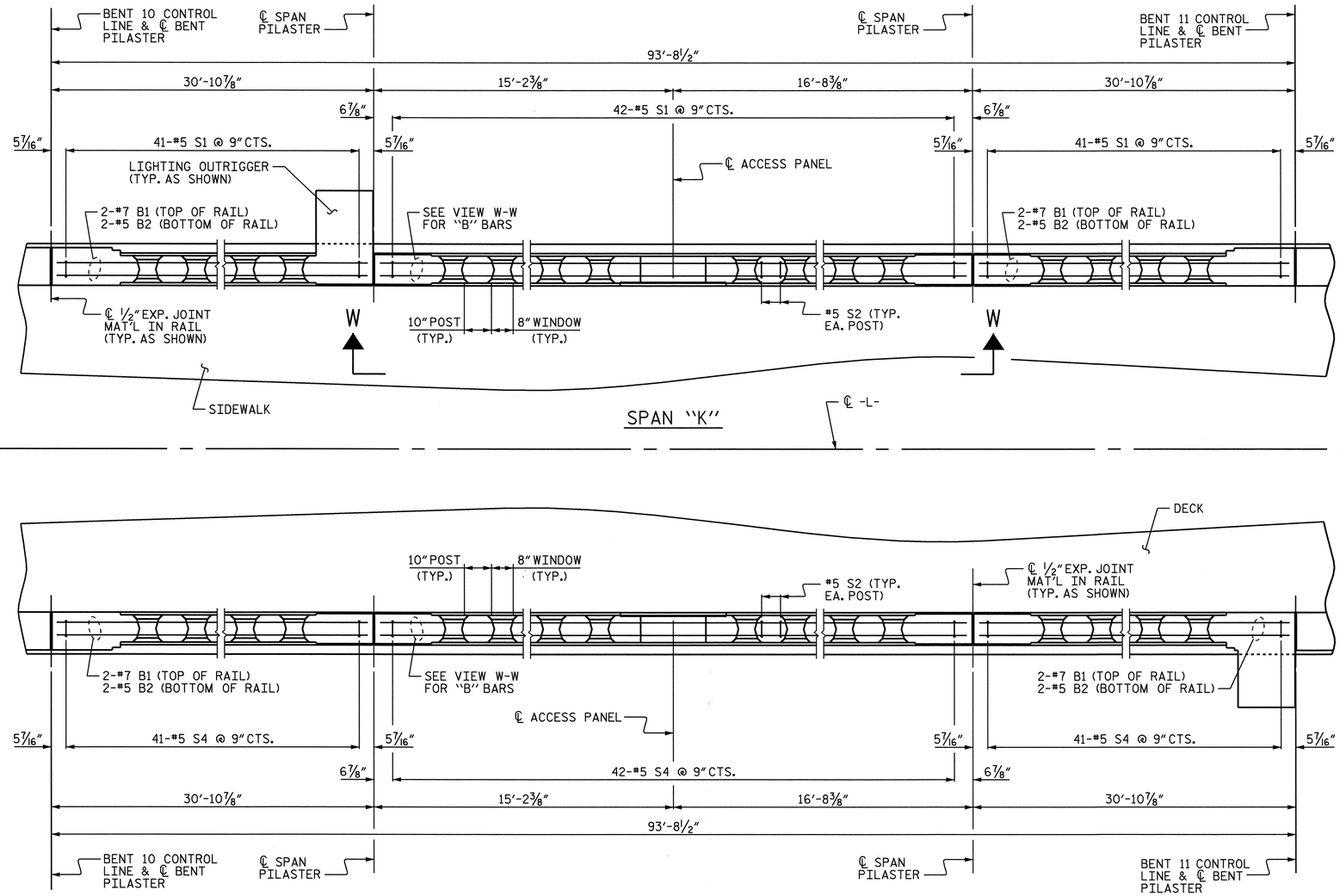

REINFORCING STEEL PLACEMENT

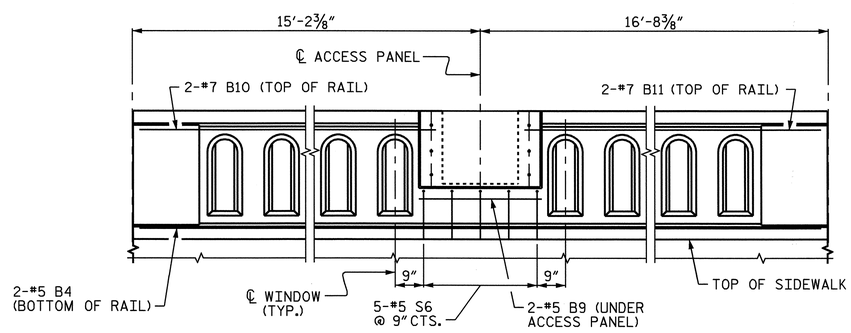

VIEW W-W

(LEFT SIDE SHOWN, RIGHT SIDE SIMILAR EXCEPT OMIT SIDEWALK.)

NOTES:

FOR LOCATION OF #5 S2 BARS IN PILASTERS, SEE "CLASSIC CONCRETE BRIDGE RAIL DETAILS", SHEET 1 OF 4.

FOR LIGHTING OUTRIGGER REINFORCING STEEL AND DETAILS, SEE "LIGHTING OUTRIGGER" SHEET.

FOR ACCESS PANEL DETAILS, SEE "CLASSIC CONCRETE BRIDGE RAIL DETAILS", SHEET 4 OF 4.

NORTH CAROLINA PROFESSIONAL SEAL 21638 ENGINEER LAURA E. SUTTON
11/30/06

PROJECT NO. B-2532
CRAVEN COUNTY
STATION: 31+21.29 -L-

SHEET 6 OF 12

STATE OF NORTH CAROLINA
DEPARTMENT OF TRANSPORTATION
RALEIGH

SUPERSTRUCTURE
CLASSIC CONCRETE BRIDGE RAIL REINFORCING STEEL
SPAN "K"

REVISIONS						SHEET NO.
NO.	BY:	DATE:	NO.	BY:	DATE:	3-74
1			3			TOTAL SHEETS
2			4			348

DRAWN BY : P.C. BREWER DATE : 5/16/06
CHECKED BY : A.S. CALLAWAY DATE : 9/22/06

24-OCT-2006 14:51
r:\Structures\pbrewer\Microstation\B2532_sd_BR_01.dgn
LSUTTON

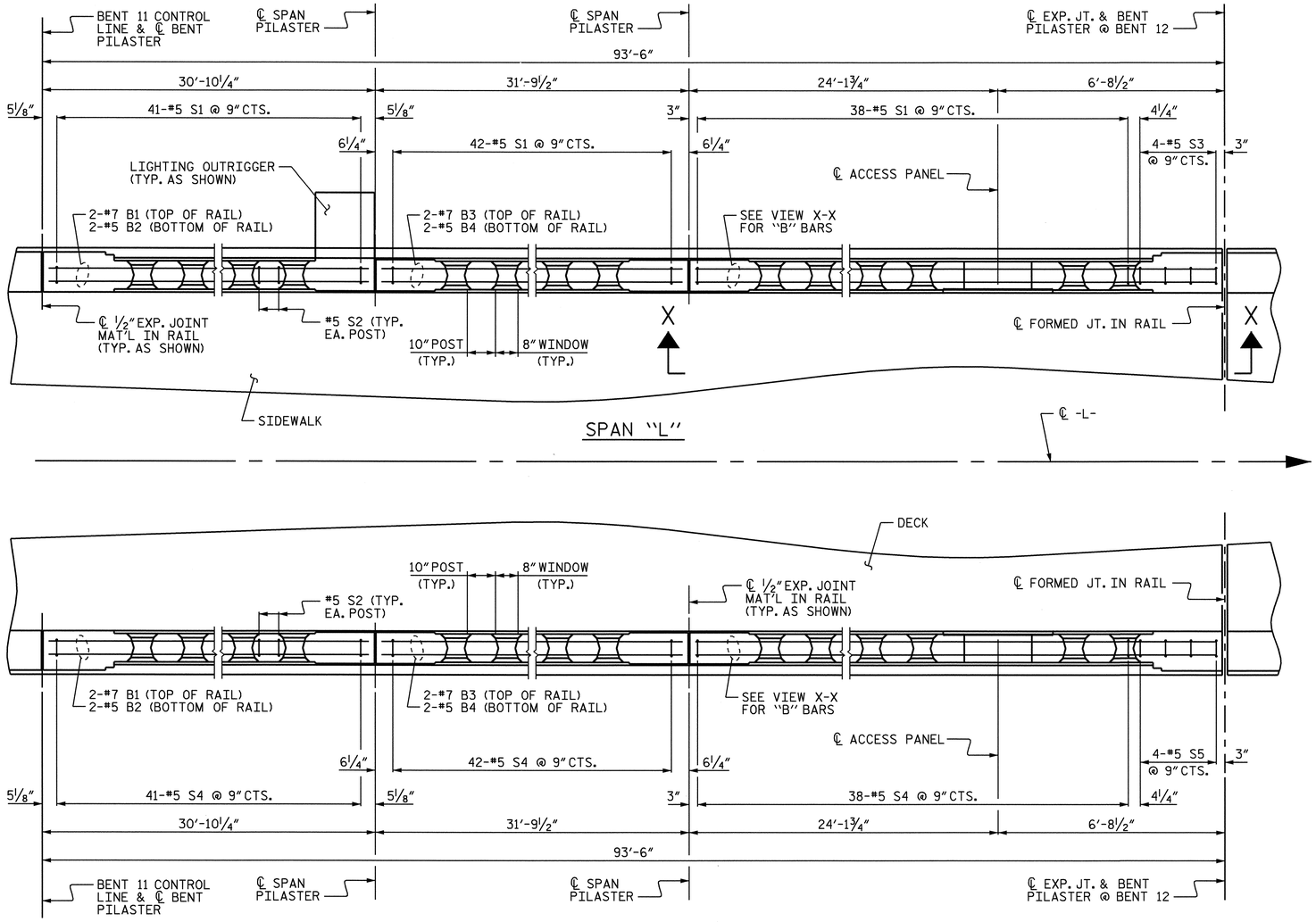

REINFORCING STEEL PLACEMENT

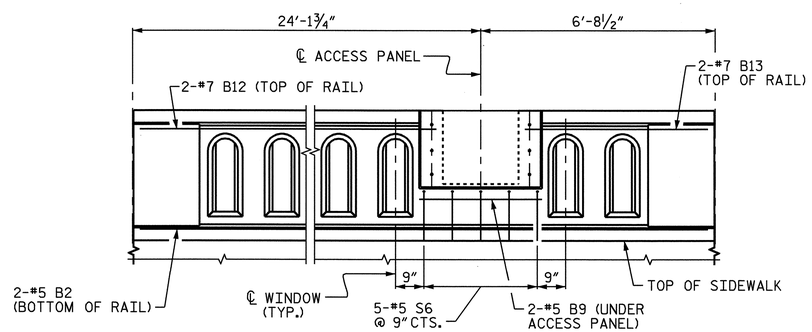

VIEW X-X

(LEFT SIDE SHOWN, RIGHT SIDE SIMILAR EXCEPT OMIT SIDEWALK.)

NOTES:

FOR LOCATION OF #5 S2 BARS IN PILASTERS, SEE "CLASSIC CONCRETE BRIDGE RAIL DETAILS", SHEET 1 OF 4.

THE #5 S3 AND #5 S5 BAR SHALL BE INSTALLED USING AN ADHESIVE ANCHORING SYSTEM AFTER THE SAWING THE JOINT. THE YIELD LOAD FOR THE #5 S3 AND #5 S5 BARS IS 18.6 KIPS. FIELD TESTING OF THE ADHESIVE BONDING SYSTEM IS NOT REQUIRED.

FOR LIGHTING OUTRIGGER REINFORCING STEEL AND DETAILS, SEE "LIGHTING OUTRIGGER" SHEET.

FOR ACCESS PANEL DETAILS, SEE "CLASSIC CONCRETE BRIDGE RAIL DETAILS", SHEET 4 OF 4.

NORTH CAROLINA PROFESSIONAL SEAL 21638 ENGINEER LAURA E. SUTTON
11/20/06

PROJECT NO. B-2532
CRAVEN COUNTY
STATION: 31+21.29 -L-

SHEET 7 OF 12

STATE OF NORTH CAROLINA
DEPARTMENT OF TRANSPORTATION
RALEIGH

SUPERSTRUCTURE
CLASSIC CONCRETE BRIDGE RAIL REINFORCING STEEL
SPAN "L"

REVISIONS						SHEET NO.
NO.	BY:	DATE:	NO.	BY:	DATE:	S-75
1			3			TOTAL SHEETS
2			4			348

DRAWN BY : P.C. BREWER DATE : 5/16/06
CHECKED BY : A.S. CALLAWAY DATE : 9/22/06

24-OCT-2006 14:51
r:\Structures\pbrewer\Microstation\B2532_sd_BR_01.dgn
LSUTTON

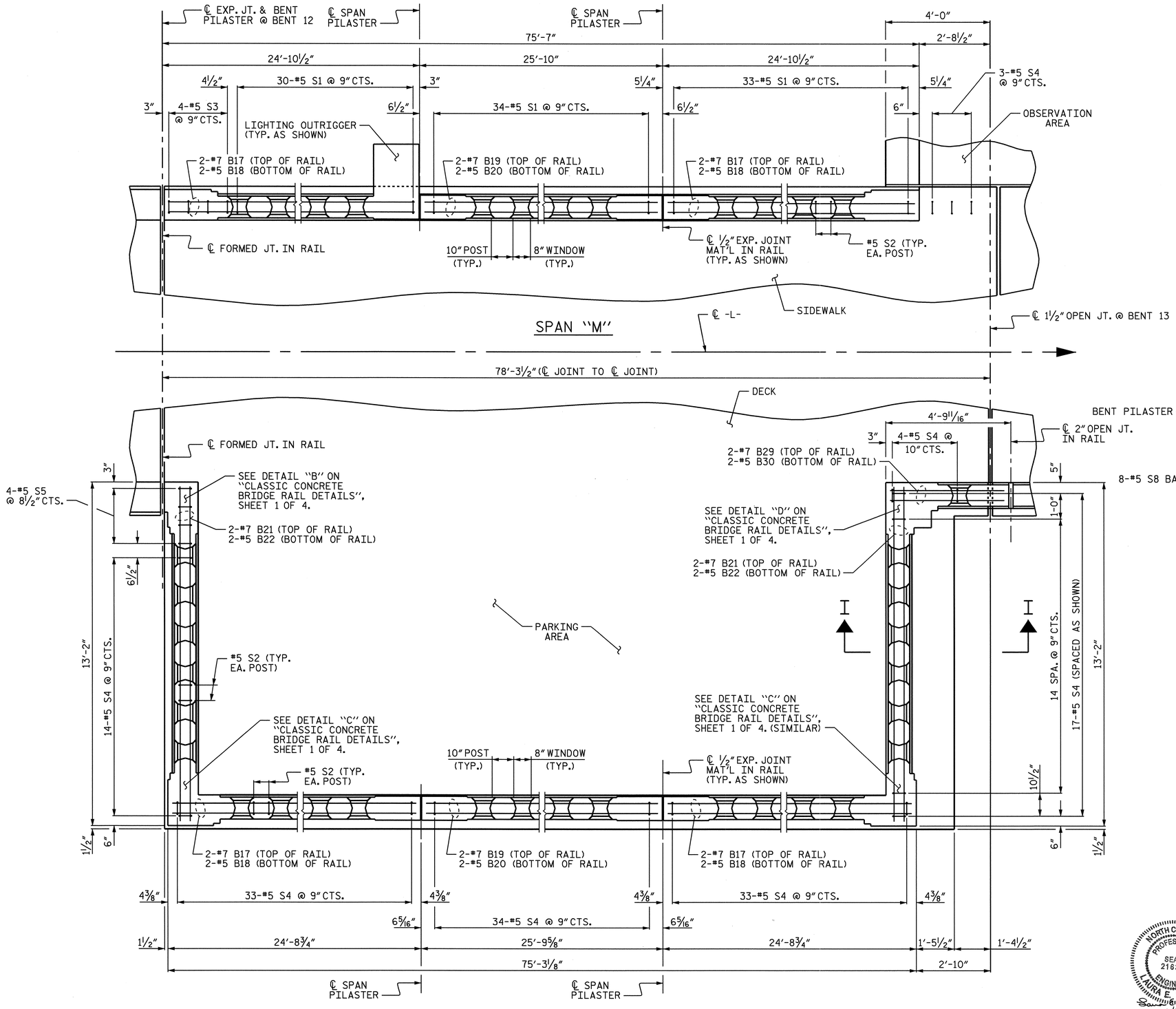

REINFORCING STEEL PLACEMENT

NOTES:

FOR LOCATION OF #5 S2, #4 S7, AND #4 S8 BARS IN PILASTERS, SEE "CLASSIC CONCRETE BRIDGE RAIL DETAILS", SHEET 1 OF 4.

THE #5 S3 AND #5 S5 BAR SHALL BE INSTALLED USING AN ADHESIVE ANCHORING SYSTEM AFTER THE SAWING THE JOINT. THE YIELD LOAD FOR THE #5 S3 AND #5 S5 BARS IS 18.6 KIPS. FIELD TESTING OF THE ADHESIVE BONDING SYSTEM IS NOT REQUIRED.

FOR LIGHTING OUTRIGGER REINFORCING STEEL AND DETAILS, SEE "LIGHTING OUTRIGGER" SHEET.

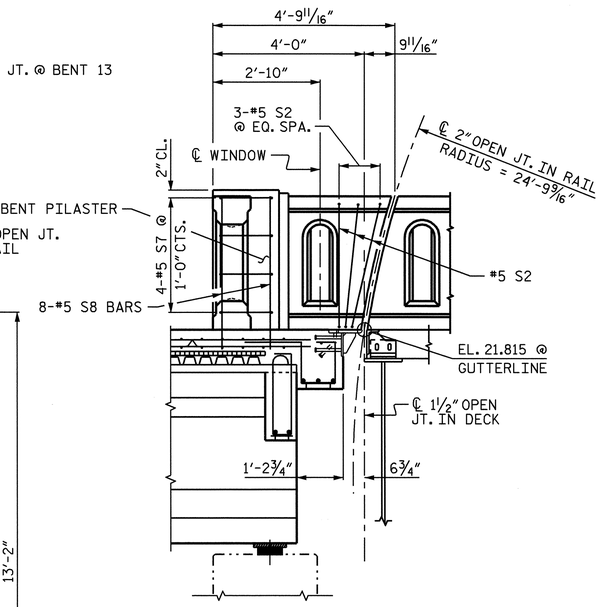

SECTION I-I

PROJECT NO. B-2532

CRAVEN COUNTY

STATION: 31+21.29 -L-

SHEET 8 OF 12

STATE OF NORTH CAROLINA
DEPARTMENT OF TRANSPORTATION
RALEIGH

SUPERSTRUCTURE
CLASSIC CONCRETE BRIDGE RAIL REINFORCING STEEL
SPAN "M"

NORTH CAROLINA PROFESSIONAL SEAL 21638 ENGINEER LAURA E. SUTTON
2/6/07

REVISIONS						SHEET NO.
NO.	BY:	DATE:	NO.	BY:	DATE:	S-76
1			3			TOTAL SHEETS
2			4			348

DRAWN BY : P.C. BREWER DATE : 5/16/06
CHECKED BY : A.S. CALLAWAY DATE : 9/22/06

08-FEB-2007 16:46
K:\Structures\pbrewer\Microstation\B2532_sd_BR_01.dgn
pbrewer

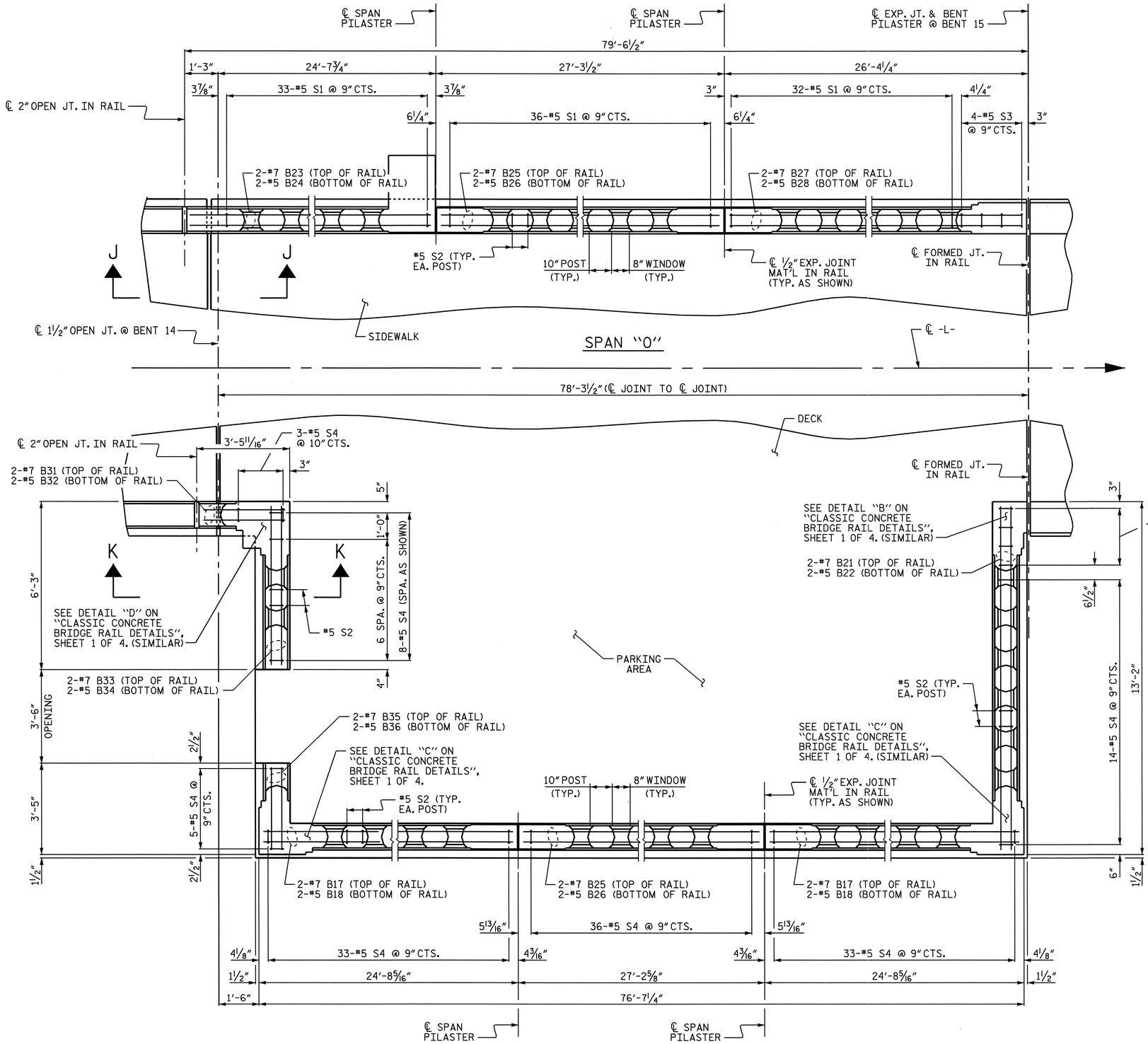

REINFORCING STEEL PLACEMENT

NOTES:

FOR LOCATION OF #5 S2, #4 S7, AND #4 S8 BARS IN PILASTERS, SEE "CLASSIC CONCRETE BRIDGE RAIL DETAILS", SHEET 1 OF 4.

THE #5 S3 AND #5 S5 BAR SHALL BE INSTALLED USING AN ADHESIVE ANCHORING SYSTEM AFTER THE SAWING THE JOINT. THE YIELD LOAD FOR THE #5 S3 AND #5 S5 BARS IS 18.6 KIPS. FIELD TESTING OF THE ADHESIVE BONDING SYSTEM IS NOT REQUIRED.

FOR LIGHTING OUTRIGGER REINFORCING STEEL AND DETAILS, SEE "LIGHTING OUTRIGGER" SHEET.

FOR SECTION J-J SEE "CLASSIC CONCRETE BRIDGE RAIL POST SPACING" SHEET 9 OF 12.

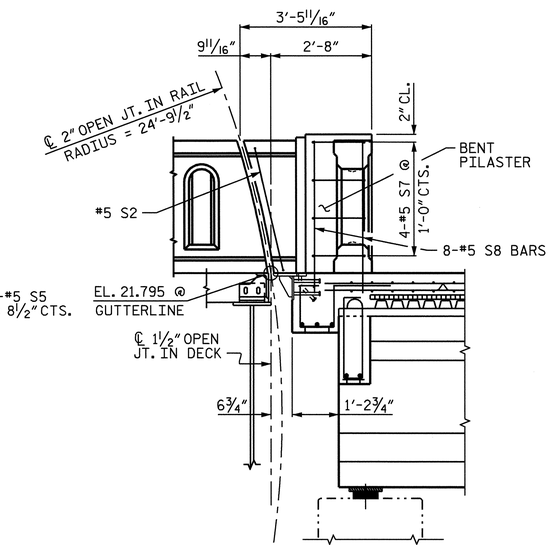

SECTION K-K

PROJECT NO. B-2532

CRAVEN COUNTY

STATION: 31+21.29 -L-

SHEET 9 OF 12

STATE OF NORTH CAROLINA
DEPARTMENT OF TRANSPORTATION
RALEIGH

SUPERSTRUCTURE
CLASSIC CONCRETE BRIDGE RAIL REINFORCING STEEL
SPAN "O"

NORTH CAROLINA PROFESSIONAL SEAL 21638 ENGINEER LAURA E. SUTTON
2/8/07

REVISIONS						SHEET NO.
NO.	BY:	DATE:	NO.	BY:	DATE:	S-77
1			3			TOTAL SHEETS
2			4			348

DRAWN BY : P.C. BREWER DATE : 5/16/06
CHECKED BY : A.S. CALLAWAY DATE : 9/22/06

08-FEB-2007 16:47
K:\Structures\pbrewer\Microstation\B2532_sd_BR_01.dgn
pbrewer

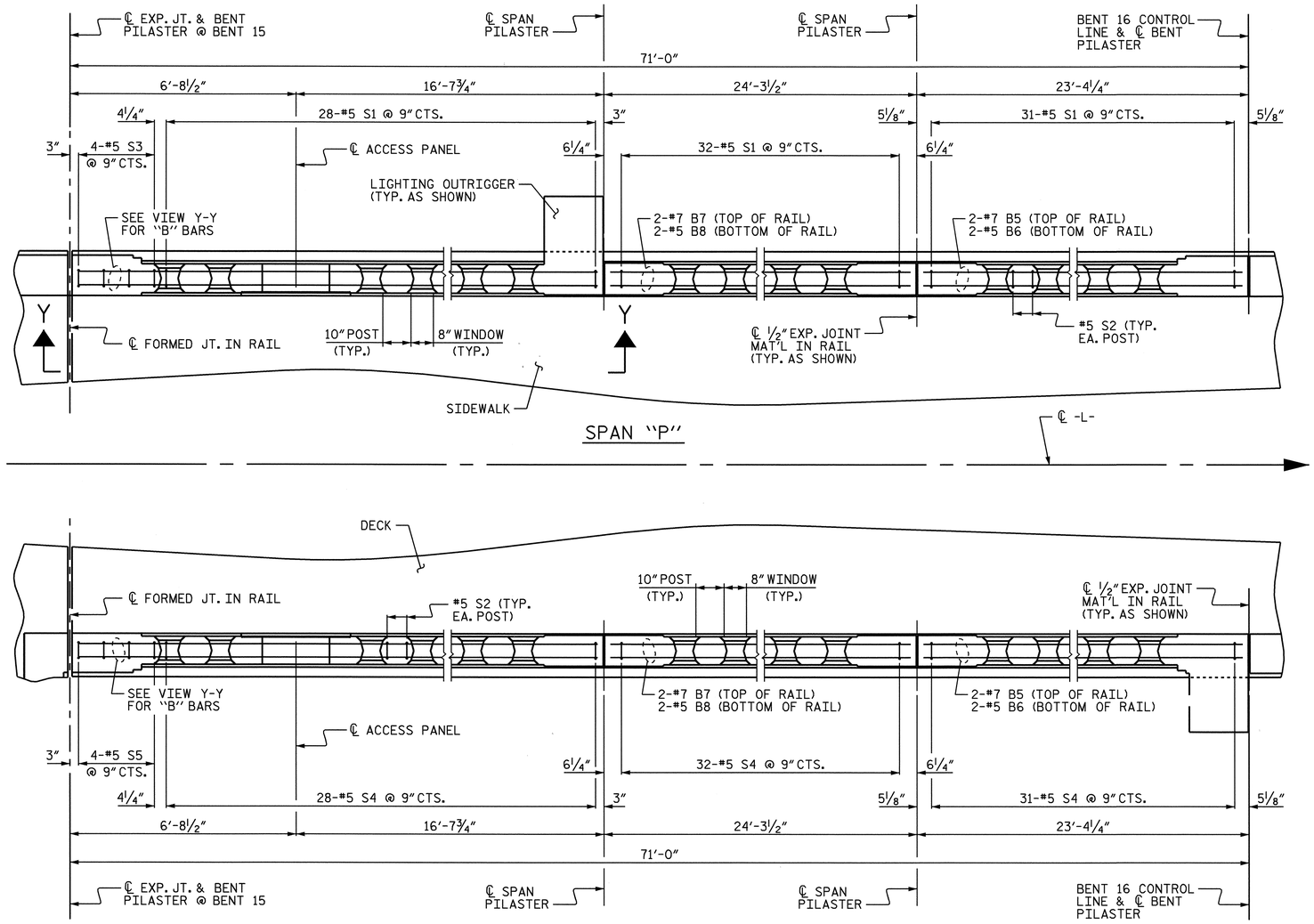

REINFORCING STEEL PLACEMENT

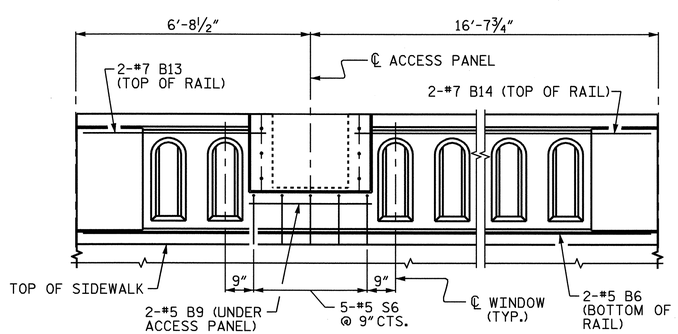

VIEW Y-Y

(LEFT SIDE SHOWN, RIGHT SIDE SIMILAR EXCEPT OMIT SIDEWALK.)

NOTES:

FOR LOCATION OF #5 S2 BARS IN PILASTERS, SEE "CLASSIC CONCRETE BRIDGE RAIL DETAILS", SHEET 1 OF 4.

THE #5 S3 AND #5 S5 BAR SHALL BE INSTALLED USING AN ADHESIVE ANCHORING SYSTEM AFTER THE SAWING THE JOINT. THE YIELD LOAD FOR THE #5 S3 AND #5 S5 BARS IS 18.6 KIPS. FIELD TESTING OF THE ADHESIVE BONDING SYSTEM IS NOT REQUIRED.

FOR LIGHTING OUTRIGGER REINFORCING STEEL AND DETAILS, SEE "LIGHTING OUTRIGGER" SHEET.

FOR ACCESS PANEL DETAILS, SEE "CLASSIC CONCRETE BRIDGE RAIL DETAILS", SHEET 4 OF 4.

NORTH CAROLINA PROFESSIONAL SEAL 21638 ENGINEER LAURA E. SUTTON
11/30/06

PROJECT NO. B-2532
CRAVEN COUNTY
STATION: 31+21.29 -L-

SHEET 10 OF 12

STATE OF NORTH CAROLINA
DEPARTMENT OF TRANSPORTATION
RALEIGH

SUPERSTRUCTURE
CLASSIC CONCRETE BRIDGE RAIL REINFORCING STEEL
SPAN "P"

REVISIONS						SHEET NO.
NO.	BY:	DATE:	NO.	BY:	DATE:	S-78
1			3			TOTAL SHEETS
2			4			348

DRAWN BY : P.C. BREWER DATE : 5/17/06
CHECKED BY : A.S. CALLAWAY DATE : 9/22/06

24-OCT-2006 14:50
r:\Structures\pbrewer\Microstation\B2532_sd_BR_01.dgn
LSUTTON

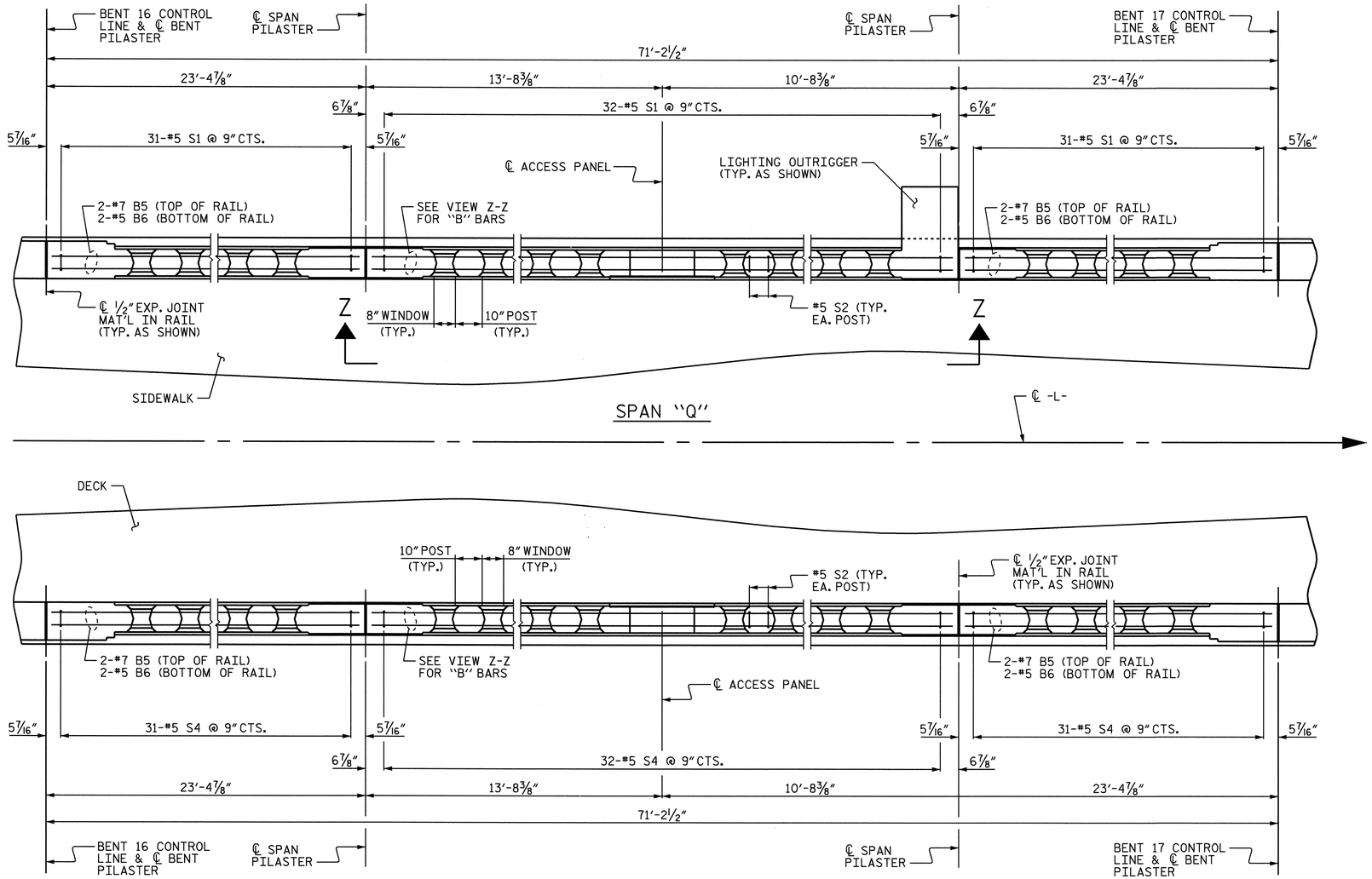

REINFORCING STEEL PLACEMENT

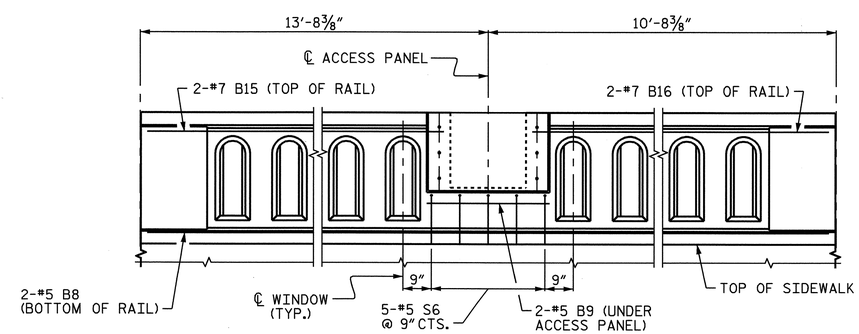

VIEW Z-Z

(LEFT SIDE SHOWN, RIGHT SIDE SIMILAR EXCEPT OMIT SIDEWALK.)

NOTES:

FOR LOCATION OF #5 S2 BARS IN PILASTERS, SEE "CLASSIC CONCRETE BRIDGE RAIL DETAILS", SHEET 1 OF 4.

FOR LIGHTING OUTRIGGER REINFORCING STEEL AND DETAILS, SEE "LIGHTING OUTRIGGER" SHEET.

FOR ACCESS PANEL DETAILS, SEE "CLASSIC CONCRETE BRIDGE RAIL DETAILS", SHEET 4 OF 4.

NORTH CAROLINA PROFESSIONAL SEAL 21638 ENGINEER LAURA E. SUTTON
11/30/06

PROJECT NO. B-2532
CRAVEN COUNTY
STATION: 31+21.29 -L-

SHEET 11 OF 12

STATE OF NORTH CAROLINA
DEPARTMENT OF TRANSPORTATION
RALEIGH

SUPERSTRUCTURE
CLASSIC CONCRETE BRIDGE RAIL REINFORCING STEEL
SPAN "Q"

REVISIONS						SHEET NO.
NO.	BY:	DATE:	NO.	BY:	DATE:	S-79
1			3			TOTAL SHEETS
2			4			348

DRAWN BY : P.C. BREWER DATE : 5/17/06
CHECKED BY : A.S. CALLAWAY DATE : 9/22/06

24-OCT-2006 14:50
r:\Structures\pbrewer\Microstation\B2532_sd_BR_01.dgn
LSUTTON

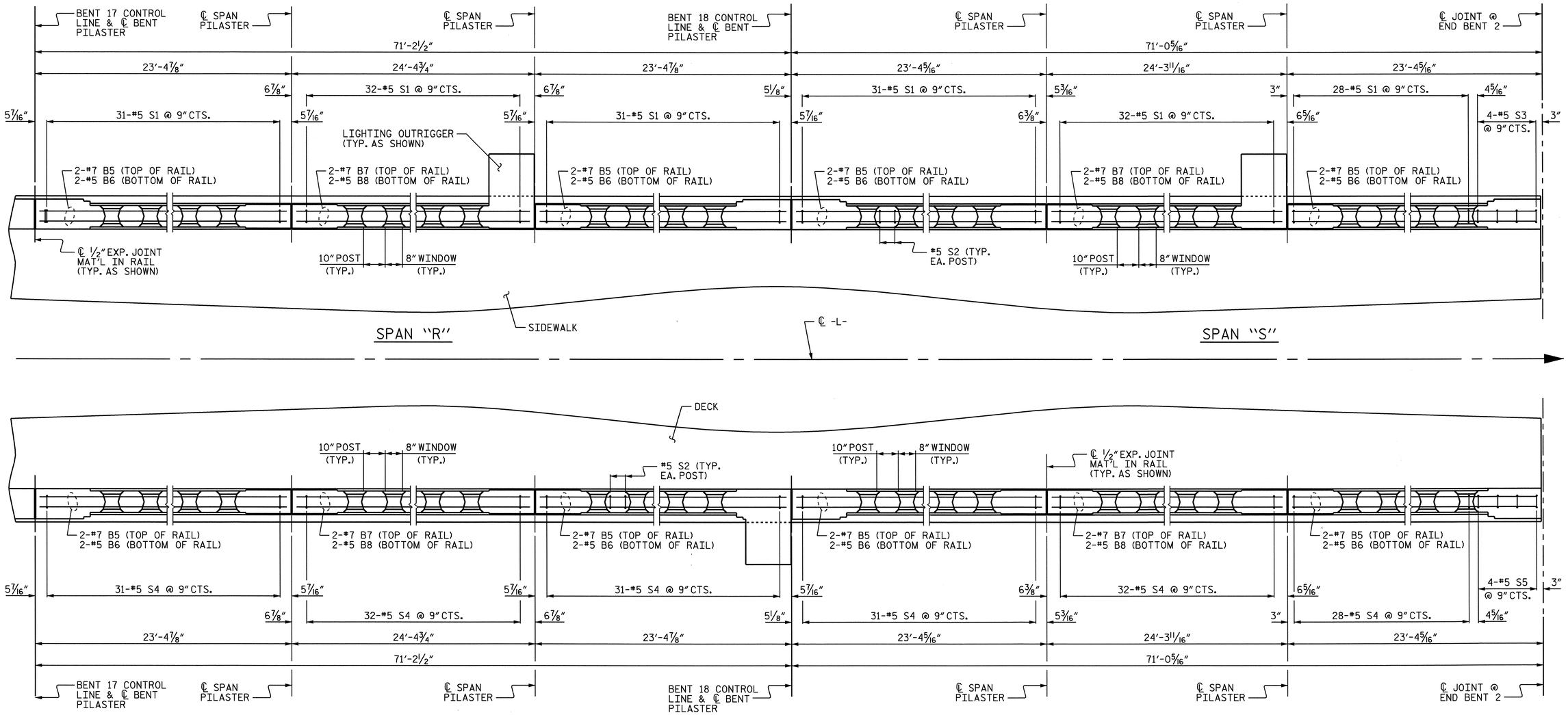

REINFORCING STEEL PLACEMENT

PROJECT NO. B-2532

CRAVEN COUNTY

STATION: 31+21.29 -L-

SHEET 12 OF 12

NOTES:

FOR LOCATION OF #5 S2 BARS IN PILASTERS, SEE "CLASSIC CONCRETE BRIDGE RAIL DETAILS", SHEET 1 OF 4.

THE #5 S3 AND #5 S5 BAR SHALL BE INSTALLED USING AN ADHESIVE ANCHORING SYSTEM AFTER THE SAWING THE JOINT. THE YIELD LOAD FOR THE #5 S3 AND #5 S5 BARS IS 18.6 KIPS. FIELD TESTING OF THE ADHESIVE BONDING SYSTEM IS NOT REQUIRED.

FOR LIGHTING OUTRIGGER REINFORCING STEEL AND DETAILS, SEE "LIGHTING OUTRIGGER" SHEET.

NORTH CAROLINA PROFESSIONAL SEAL 21638 ENGINEER LAURA E. SUTTON

11/30/06

STATE OF NORTH CAROLINA
DEPARTMENT OF TRANSPORTATION
RALEIGH

SUPERSTRUCTURE
CLASSIC CONCRETE BRIDGE RAIL REINFORCING STEEL
SPANS "R" AND "S"

REVISIONS						SHEET NO.
NO.	BY:	DATE:	NO.	BY:	DATE:	S-80
1			3			TOTAL SHEETS
2			4			348

DRAWN BY : P.C. BREWER DATE : 5/17/06
CHECKED BY : A.S. CALLAWAY DATE : 9/22/06

24-OCT-2006 14:50
r:\Structures\pbrewer\Microstation\B2532_sd_BR_01.dgn
LSUTTON

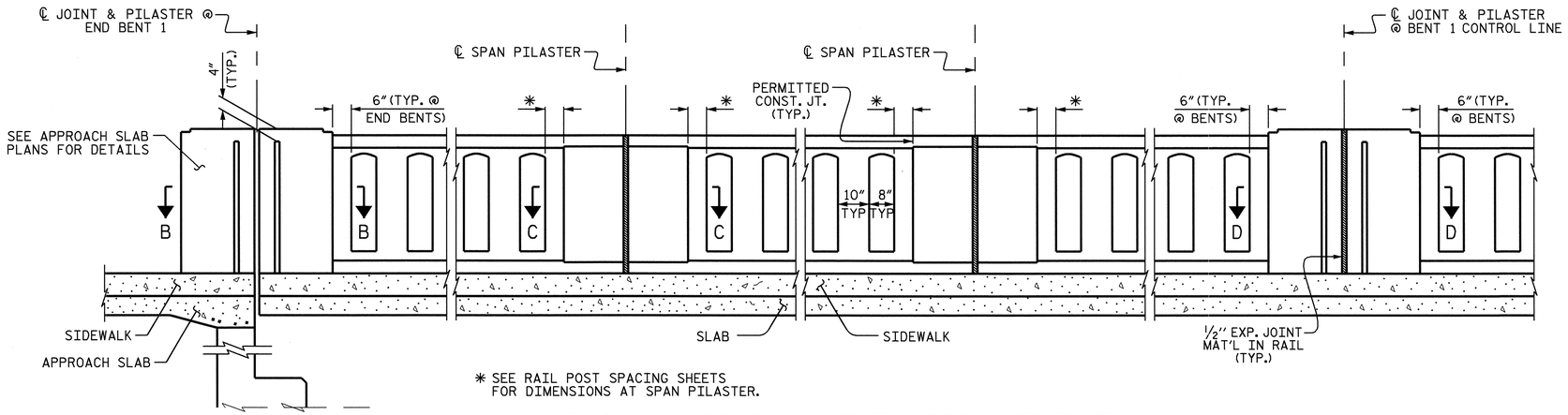

PARTIAL ROADWAY ELEVATION OF RAIL

CHAMFERS NOT SHOWN FOR CLARITY.
LEFT SIDE SHOWN, RIGHT SIDE SIMILAR EXCEPT OMIT SIDEWALK.

NOTES:

CLASSIC CONCRETE BRIDGE RAIL IN A CONTINUOUS UNIT SHALL NOT BE CAST UNTIL ALL SLAB CONCRETE IN THE UNIT HAS BEEN CAST AND HAS REACHED A MINIMUM COMPRESSIVE STRENGTH OF 3,000 PSI.

WHEN EVAZOTE JOINT SEAL IS REQUIRED, THE JOINT IN THE DECK SHALL BE SAWED PRIOR TO THE CASTING OF THE CLASSIC CONCRETE RAIL.

ALL REINFORCING STEEL IN THE CLASSIC CONCRETE BRIDGE RAIL SHALL BE EPOXY COATED.

THE #5 S3, #5 S5, AND #5 S8 BARS SHALL BE INSTALLED USING AN ADHESIVE ANCHORING SYSTEM AFTER THE SAWING THE JOINT. THE YIELD LOAD FOR THE #5 S3 AND #5 S5 BARS IS 18.6 KIPS. FIELD TESTING OF THE ADHESIVE BONDING SYSTEM IS NOT REQUIRED.

PROVIDE A CLASS I SURFACE FINISH FOR ALL EXPOSED SURFACES.

SEE SPECIAL PROVISIONS FOR CLASSIC CONCRETE BRIDGE RAIL.

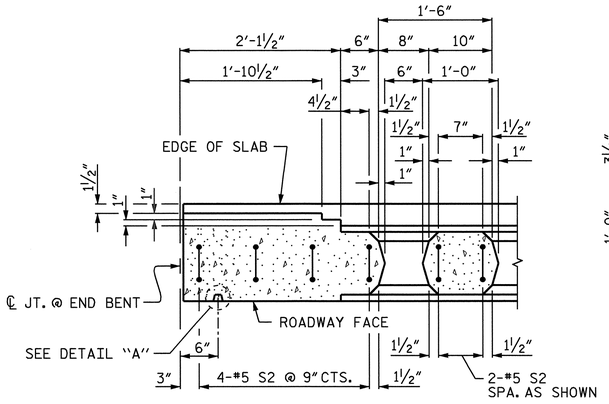

SECTION B-B

SHOWING END BENT PILASTER

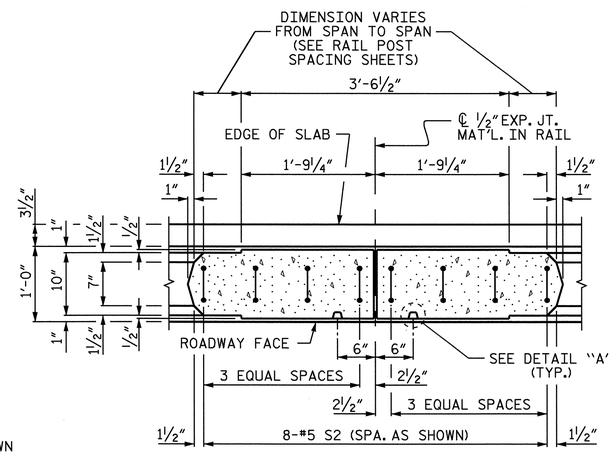

SECTION C-C

SHOWING SPAN PILASTER

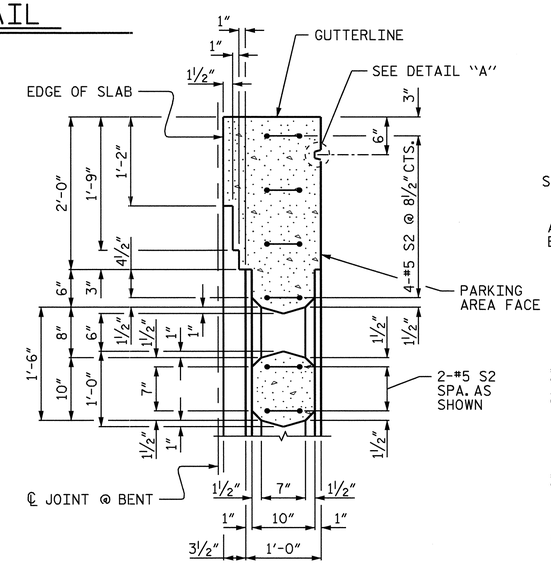

DETAIL "B"

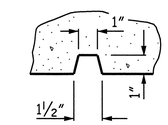

DETAIL "A"

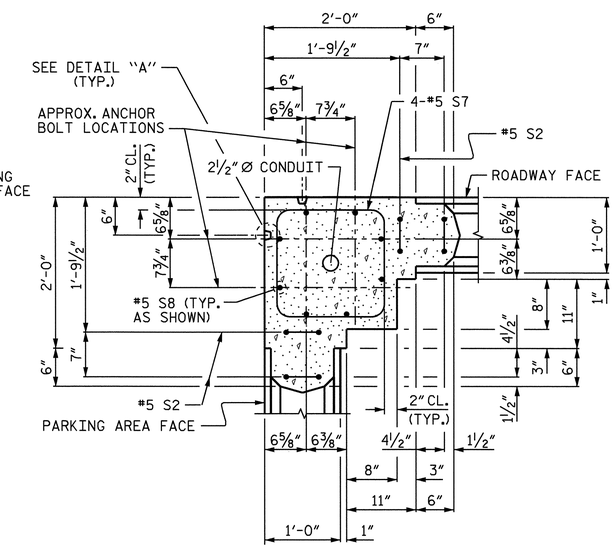

DETAIL "D"

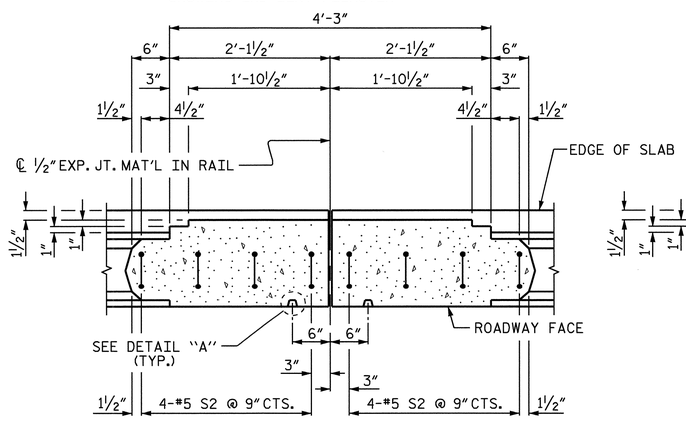

SECTION D-D

SHOWING BENT PILASTER
(TYP. AT CONTINUOUS BENTS)

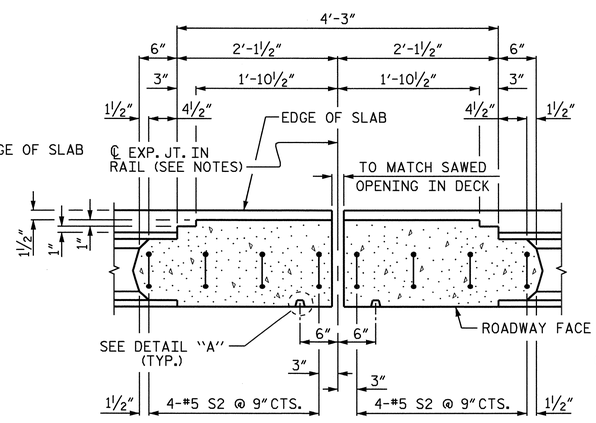

SECTION D-D

SHOWING BENT PILASTER
(TYP. AT BENTS 4, 8, 12, & 15)

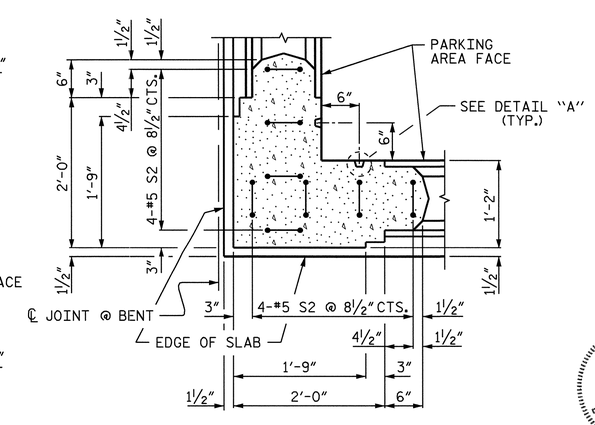

DETAIL "C"

PARTIAL PLANS

LEFT SIDE SHOWN, RIGHT SIDE SIMILAR

PROJECT NO. B-2532
CRAVEN COUNTY
STATION: 31+21.29 -L-

SHEET 1 OF 4

STATE OF NORTH CAROLINA
DEPARTMENT OF TRANSPORTATION
RALEIGH

SUPERSTRUCTURE

CLASSIC CONCRETE BRIDGE RAIL DETAILS

NORTH CAROLINA PROFESSIONAL SEAL 21638 ENGINEER LAURA E. SUTTON
2/8/07

REVISIONS						SHEET NO.
NO.	BY:	DATE:	NO.	BY:	DATE:	S-81
1			3			TOTAL SHEETS
2			4			348

DRAWN BY : P.C. BREWER DATE : 2/1/06
CHECKED BY : A.S. CALLAWAY DATE : 9/26/06

08-FEB-2007 17:04
K:\Structures\pbrewer\Microstation\B2532_sd_BR_01.dgn
pbrewer

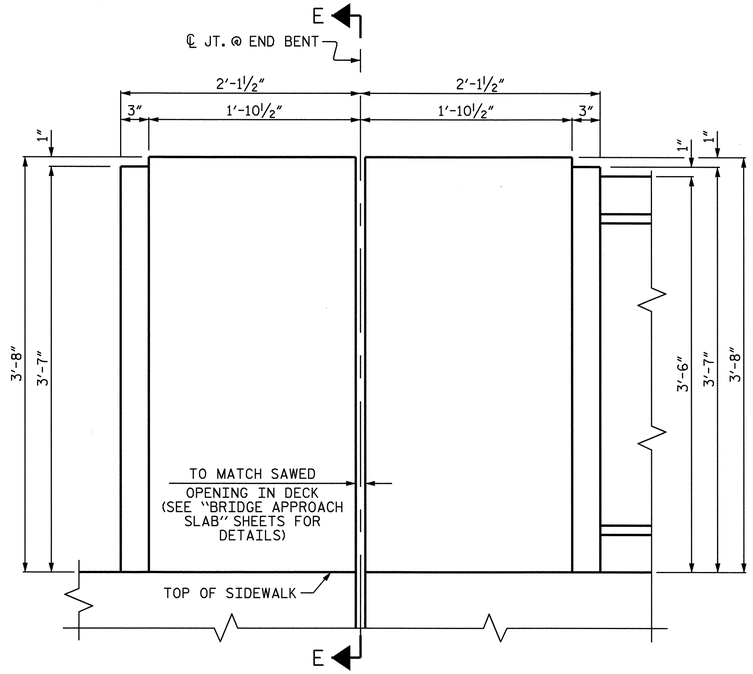

END BENT PILASTER
(END BENT 1 SHOWN, END BENT 2 SIMILAR)

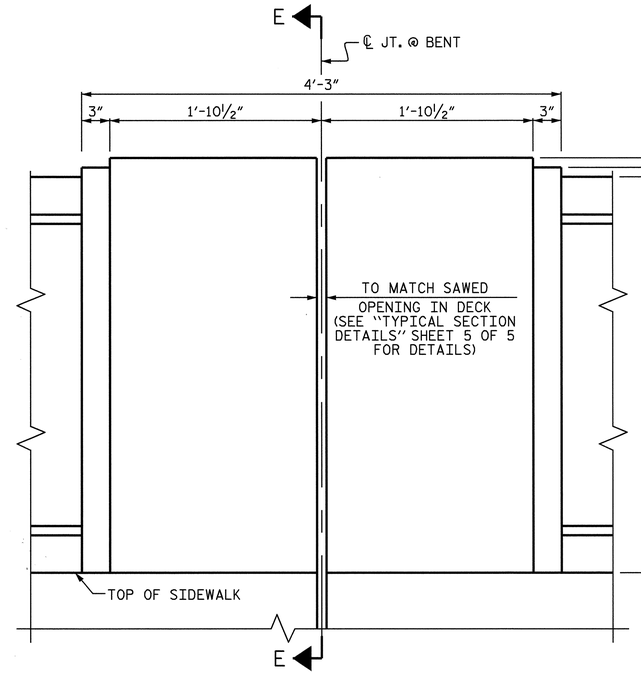

BENT PILASTER
(TYP. AT BENTS 4, 8, 12, & 15)

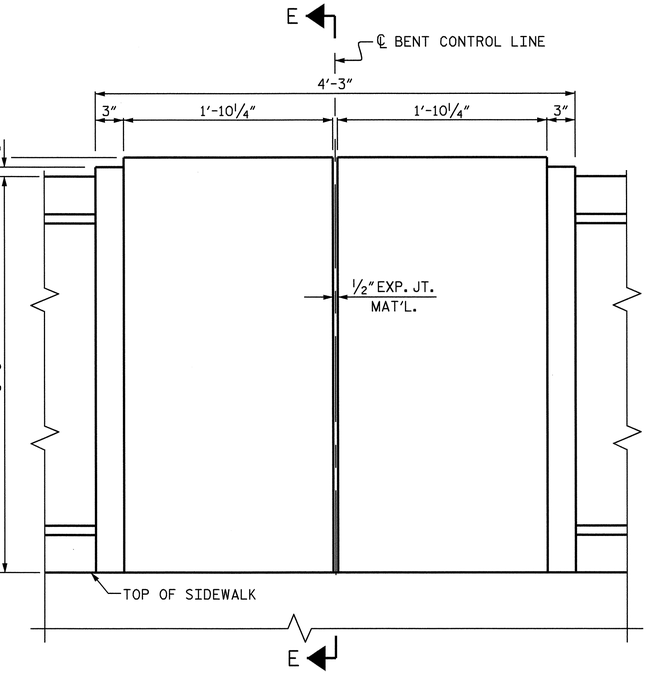

BENT PILASTER
(TYP. EXCEPT AS NOTED)

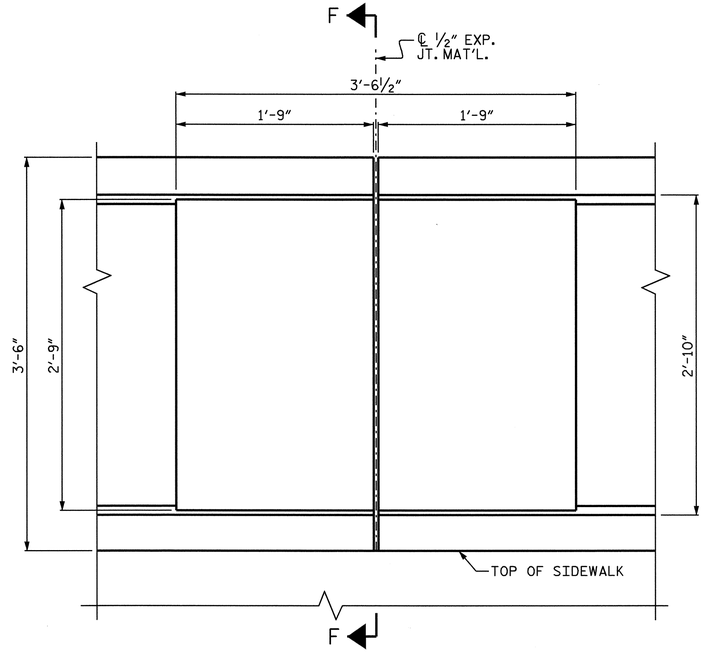

SPAN PILASTER

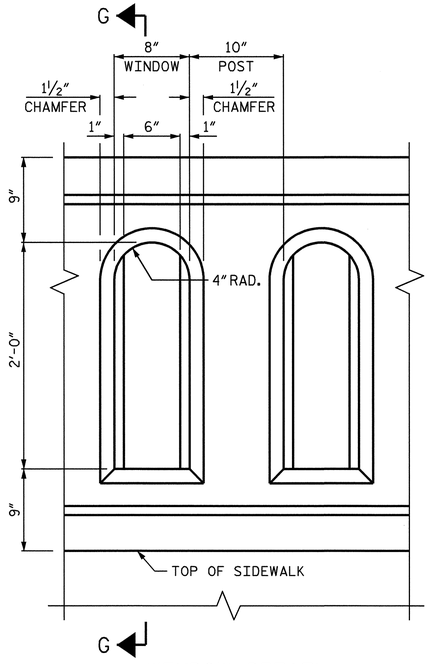

WINDOW DETAIL

NOTE:
FOR SECTIONS THROUGH PILASTERS, SEE SHEET 3 OF 4.

PILASTER ELEVATIONS

LEFT SIDE SHOWN, RIGHT SIDE SIMILAR EXCEPT OMIT SIDEWALK.

PROJECT NO. B-2532
CRAVEN COUNTY
STATION: 31+21.29 -L-

SHEET 2 OF 4

STATE OF NORTH CAROLINA
DEPARTMENT OF TRANSPORTATION
RALEIGH

SUPERSTRUCTURE

CLASSIC CONCRETE BRIDGE RAIL DETAILS

NORTH CAROLINA PROFESSIONAL SEAL 21638 ENGINEER LAURA E. SUTTON
11/30/06

REVISIONS						SHEET NO.
NO.	BY:	DATE:	NO.	BY:	DATE:	S-82
1			3			TOTAL SHEETS
2			4			348

DRAWN BY : P.C. BREWER DATE : 2/1/06
CHECKED BY : A.S. CALLAWAY DATE : 9/26/06

30-NOV-2006 11:36
r:\Structures\pbrewer\Microstation\B2532_sd_BR_01.dgn
lsutton

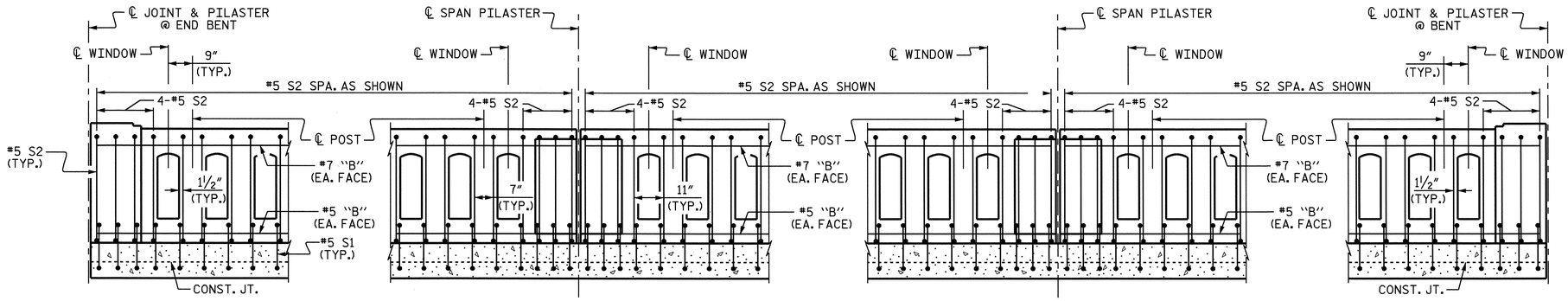

PARTIAL REINFORCING PLACEMENT

DIMENSIONS SHOWN ARE ALONG ROADWAY FACE OF RAIL.
LEFT SIDE SHOWN, RIGHT SIDE SIMILAR EXCEPT OMIT SIDEWALK.
FOR CLARITY, CHAMFERS ARE NOT SHOWN.

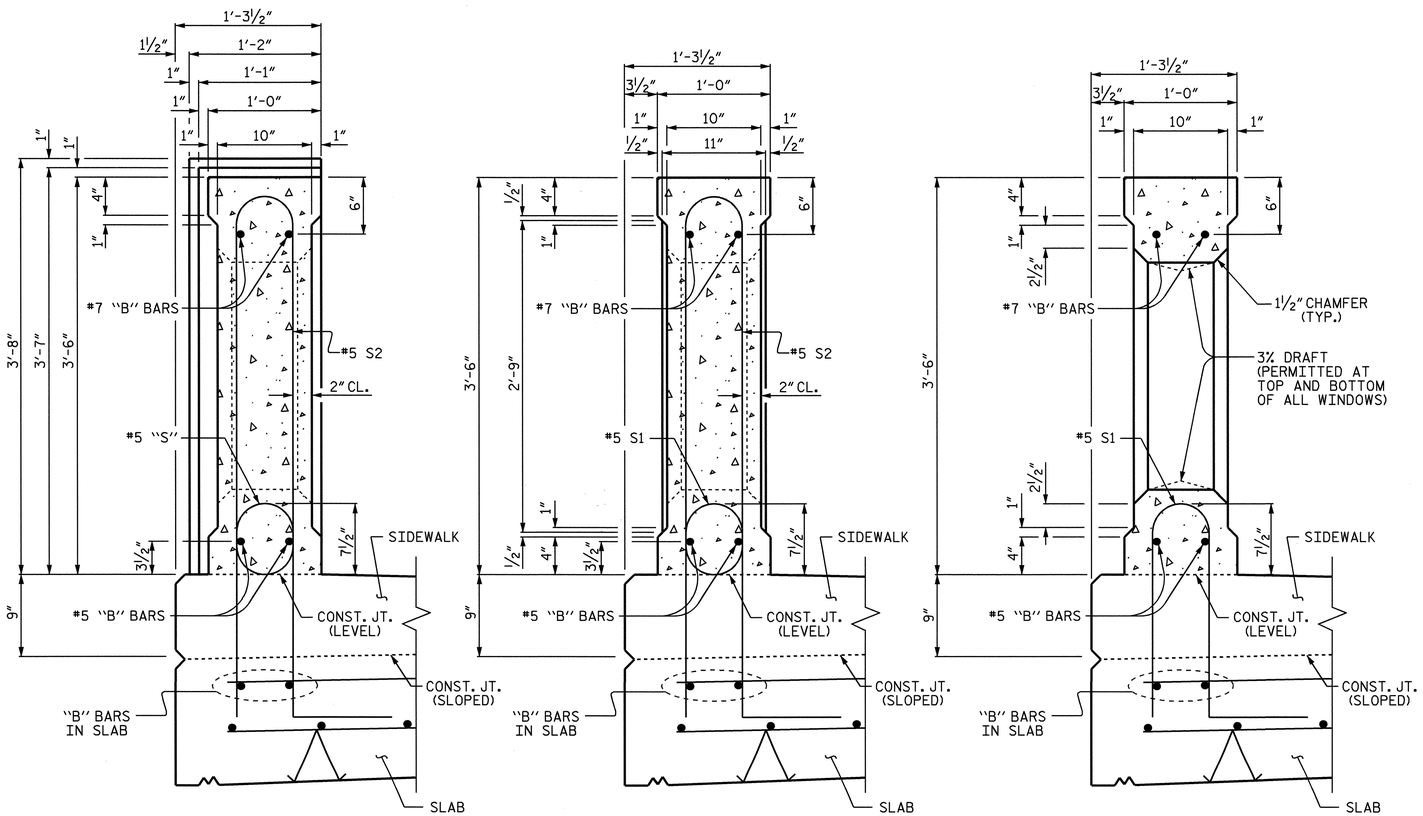

SECTION E-E
(SHOWING END BENT OR BENT PILASTER)

SECTION F-F
(SHOWING SPAN PILASTER)

SECTION G-G
(SHOWING WINDOW OF RAIL)

SECTIONS THROUGH CLASSIC CONCRETE RAIL

LEFT SIDE SHOWN, RIGHT SIDE SIMILAR EXCEPT OMIT SIDEWALK.
FOR LOCATION OF SECTIONS, SEE SHEET 2 OF 4.

PROJECT NO. B-2532
CRAVEN COUNTY
STATION: 31+21.29 -L-

SHEET 3 OF 4

STATE OF NORTH CAROLINA
DEPARTMENT OF TRANSPORTATION
RALEIGH

SUPERSTRUCTURE

CLASSIC CONCRETE BRIDGE RAIL DETAILS

NORTH CAROLINA PROFESSIONAL SEAL 21638 ENGINEER LAURA E. SUTTON
11/30/06

REVISIONS						SHEET NO.
NO.	BY:	DATE:	NO.	BY:	DATE:	S-83
1			3			TOTAL SHEETS
2			4			348

DRAWN BY : P.C. BREWER DATE : 2/1/06
CHECKED BY : A.S. CALLAWAY DATE : 9/26/06

30-NOV-2006 11:36
r:\Structures\pbrewer\Microstation\B2532_sd_BR_01.dgn
lsutton

BAR TYPES

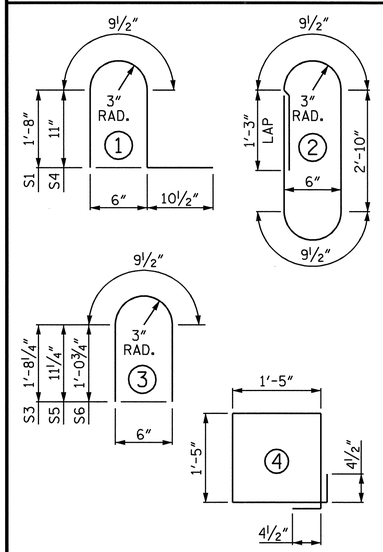

ALL BAR DIMENSIONS ARE OUT TO OUT.

BILL OF MATERIAL — SPANS "A" THROUGH "D"

BAR	NO.	SIZE	TYPE	LENGTH	WEIGHT
✱B1	32	#7	STR	30'-6"	1995
✱B2	32	#5	STR	30'-6"	1018
✱B3	16	#7	STR	31'-5"	1027
✱B4	16	#5	STR	31'-5"	524
✱S1	490	#5	1	5'-0"	2555
✱S2	1024	#5	2	8'-6"	9078
✱S3	8	#5	3	4'-2"	35
✱S4	490	#5	1	3'-6"	1789
✱S5	8	#5	3	2'-8"	22

✱ EPOXY COATED REINFORCING STEEL 18,043 LBS.
CLASS AA CONCRETE 94.3 CU. YDS.
CONCRETE BRIDGE RAIL 748.88 LIN. FT.

BILL OF MATERIAL — SPANS "E" THROUGH "H"

BAR	NO.	SIZE	TYPE	LENGTH	WEIGHT
✱B1	32	#7	STR	30'-6"	1995
✱B2	32	#5	STR	30'-6"	1018
✱B3	16	#7	STR	31'-5"	1027
✱B4	16	#5	STR	31'-5"	524
✱S1	490	#5	1	5'-0"	2555
✱S2	1024	#5	2	8'-6"	9078
✱S3	8	#5	3	4'-2"	35
✱S4	490	#5	1	3'-6"	1789
✱S5	8	#5	3	2'-8"	22

✱ EPOXY COATED REINFORCING STEEL 18,043 LBS.
CLASS AA CONCRETE 94.2 CU. YDS.
CONCRETE BRIDGE RAIL 748.83 LIN. FT.

BILL OF MATERIAL — SPANS "I" THROUGH "L"

BAR	NO.	SIZE	TYPE	LENGTH	WEIGHT
✱B1	28	#7	STR	30'-6"	1746
✱B2	32	#5	STR	30'-6"	1018
✱B3	12	#7	STR	31'-5"	771
✱B4	16	#5	STR	31'-5"	524
✱B9	8	#5	STR	3'-3"	27
✱B10	4	#7	STR	13'-9"	112
✱B11	4	#7	STR	15'-3"	125
✱B12	4	#7	STR	22'-8"	185
✱B13	4	#7	STR	5'-3"	43
✱S1	490	#5	1	5'-0"	2555
✱S2	1000	#5	2	8'-6"	8866
✱S3	8	#5	3	4'-2"	35
✱S4	490	#5	1	3'-6"	1789
✱S5	8	#5	3	2'-8"	22
✱S6	20	#5	3	2'-11"	61

✱ EPOXY COATED REINFORCING STEEL 17,879 LBS.
CLASS AA CONCRETE 94.1 CU. YDS.
CONCRETE BRIDGE RAIL 748.83 LIN. FT.

BILL OF MATERIAL — SPAN "M"

BAR	NO.	SIZE	TYPE	LENGTH	WEIGHT
✱B17	8	#7	STR	24'-4"	398
✱B18	8	#5	STR	24'-4"	203
✱B19	4	#7	STR	25'-5"	208
✱B20	4	#5	STR	25'-5"	106
✱B21	4	#7	STR	12'-10"	105
✱B22	4	#5	STR	12'-10"	54
✱B29	2	#7	STR	4'-2"	17
✱B30	2	#5	STR	3'-7"	7
✱S1	97	#5	1	5'-0"	506
✱S2	247	#5	2	8'-6"	2190
✱S3	4	#5	3	4'-2"	17
✱S4	138	#5	1	3'-6"	504
✱S5	4	#5	3	2'-8"	11
✱S7	4	#5	4	6'-5"	27
✱S8	8	#5	STR	4'-0"	33

✱ EPOXY COATED REINFORCING STEEL 4,386 LBS.
CLASS AA CONCRETE 23.0 CU. YDS.
CONCRETE BRIDGE RAIL 178.48 LIN. FT.

BILL OF MATERIAL — SPAN "O"

BAR	NO.	SIZE	TYPE	LENGTH	WEIGHT
✱B17	4	#7	STR	24'-4"	199
✱B18	4	#5	STR	24'-4"	102
✱B21	2	#7	STR	12'-10"	52
✱B22	2	#5	STR	12'-10"	27
✱B23	2	#7	STR	25'-3"	103
✱B24	2	#5	STR	24'-3"	51
✱B25	4	#7	STR	26'-10"	219
✱B26	4	#5	STR	26'-10"	112
✱B27	2	#7	STR	26'-0"	106
✱B28	2	#5	STR	26'-0"	54
✱B31	2	#7	STR	2'-10"	12
✱B32	2	#5	STR	2'-3"	5
✱B33	2	#7	STR	5'-11"	24
✱B34	2	#5	STR	5'-11"	12
✱B35	2	#7	STR	3'-1"	13
✱B36	2	#5	STR	3'-1"	6
✱S1	101	#5	1	5'-0"	527
✱S2	242	#5	2	8'-6"	2145
✱S3	4	#5	3	4'-2"	17
✱S4	132	#5	1	3'-6"	482
✱S5	4	#5	3	2'-8"	11
✱S7	4	#5	4	6'-5"	27
✱S8	8	#5	STR	4'-0"	33

✱ EPOXY COATED REINFORCING STEEL 4,339 LBS.
CLASS AA CONCRETE 21.3 CU. YDS.
CONCRETE BRIDGE RAIL 178.95 LIN. FT.

BILL OF MATERIAL — SPANS "P" THROUGH "S"

BAR	NO.	SIZE	TYPE	LENGTH	WEIGHT
✱B5	28	#7	STR	23'-0"	1316
✱B6	32	#5	STR	23'-0"	768
✱B7	12	#7	STR	23'-11"	587
✱B8	16	#5	STR	23'-11"	399
✱B9	8	#5	STR	3'-3"	27
✱B13	4	#7	STR	5'-3"	43
✱B14	4	#7	STR	15'-2"	124
✱B15	4	#7	STR	12'-3"	100
✱B16	4	#7	STR	9'-3"	76
✱S1	370	#5	1	5'-0"	1930
✱S2	760	#5	2	8'-6"	6738
✱S3	8	#5	3	4'-2"	35
✱S4	370	#5	1	3'-6"	1351
✱S5	8	#5	3	2'-8"	22
✱S6	20	#5	3	2'-11"	61

✱ EPOXY COATED REINFORCING STEEL 13,577 LBS.
CLASS AA CONCRETE 71.7 CU. YDS.
CONCRETE BRIDGE RAIL 568.89 LIN. FT.

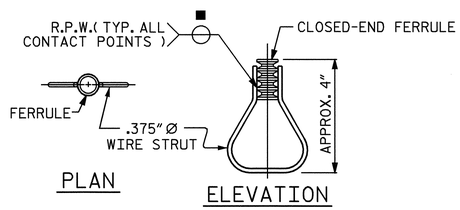

STRUCTURAL CONCRETE INSERT

■ EACH WELDED ATTACHMENT OF WIRE TO FERRULE SHALL DEVELOP THE TENSILE STRENGTH OF THE WIRE.

NOTES:

STEEL PLATES FOR ACCESS PANELS SHALL CONFORM TO AASHTO M270 GRADE 36 AND BE GALVANIZED IN ACCORDANCE WITH THE STANDARD SPECIFICATIONS.

THE COST OF THE ACCESS PANELS WITH BOLTS, NUTS, WASHERS, AND INSERTS, COMPLETE IN PLACE, SHALL BE INCLUDED IN THE LINEAR FOOT PRICE BID FOR "CLASSIC CONCRETE BRIDGE RAIL".

THE STRUCTURAL CONCRETE INSERT ASSEMBLY SHALL CONSIST OF THE FOLLOWING COMPONENTS:

A. FERRULES SHALL BE MADE FROM STEEL MEETING THE REQUIREMENTS OF AASHTO M169, GRADE 12L14 AND SHALL HAVE A MINIMUM LENGTH OF THREADS OF 1½".

B. 1 - ¾" Ø X 1⅝" BOLT WITH WASHER. BOLT SHALL CONFORM TO THE REQUIREMENTS OF ASTM A307. BOLT AND WASHER SHALL BE GALVANIZED. (AT THE CONTRACTOR'S OPTION, STAINLESS STEEL BOLT AND WASHER MAY BE USED AS AN ALTERNATE FOR THE ¾" Ø X 1⅝" GALVANIZED BOLT AND WASHER. THEY SHALL CONFORM TO OR EXCEED THE MECHANICAL REQUIREMENTS OF ASTM A307. THE USE OF THIS ALTERNATE SHALL BE APPROVED BY THE ENGINEER.)

C. WIRE STRUT SHOWN IN THE CONCRETE INSERT ASSEMBLY DETAIL IS THE MINIMUM ALLOWABLE SIZE AND SHALL HAVE A MINIMUM TENSILE STRENGTH OF 100,000 PSI. AS AN OPTION, A 7/16" Ø WIRE STRUT WITHNA MINIMUM TENSILE STRENGTH OF 90,000 PSI IS ACCEPTABLE.

TOTAL BILL OF MATERIAL

	EPOXY COATED REINFORCING STEEL (LBS.)	CLASS AA CONCRETE (CU. YDS.)	CLASSIC CONCRETE BRIDGE RAIL (LIN. FT.)
SPANS "A" THROUGH "D"	18,043	94.3	748.88
SPANS "E" THROUGH "H"	18,043	94.2	748.83
SPANS "I" THROUGH "L"	17,879	94.1	748.83
SPAN "M"	4,386	23.0	178.48
SPAN "O"	4,339	21.3	178.95
SPANS "P" THROUGH "S"	13,577	71.7	568.89
TOTALS	76,267	398.6	3,172.86

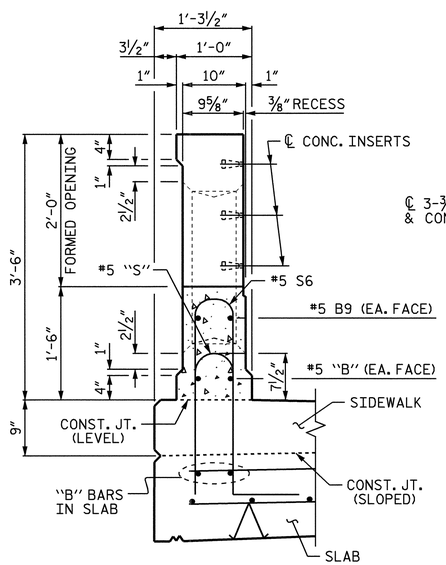

SECTION H-H

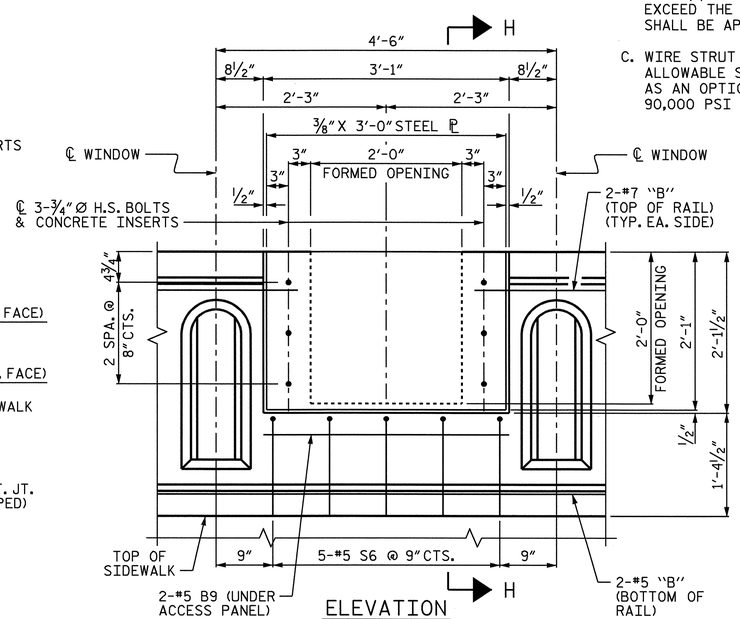

ELEVATION

ACCESS PANEL DETAILS

LEFT SIDE SHOWN, RIGHT SIDE SIMILAR EXCEPT OMIT SIDEWALK.

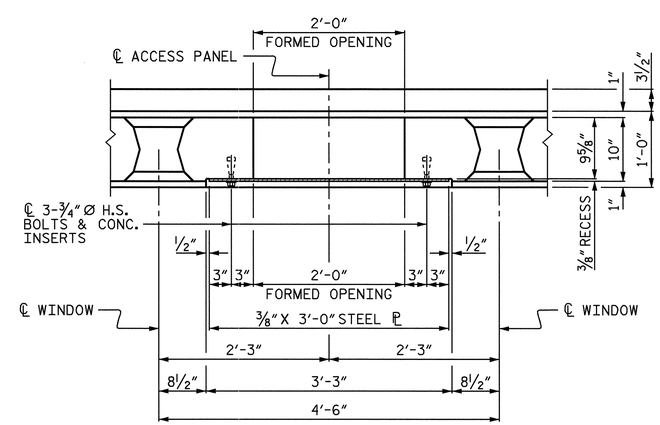

PLAN

NORTH CAROLINA PROFESSIONAL SEAL 21638 ENGINEER LAURA E. SUTTON
2/6/07

PROJECT NO. B-2532
CRAVEN COUNTY
STATION: 31+21.29 -L-

SHEET 4 OF 4

STATE OF NORTH CAROLINA
DEPARTMENT OF TRANSPORTATION
RALEIGH

SUPERSTRUCTURE

CLASSIC CONCRETE BRIDGE RAIL DETAILS

REVISIONS						SHEET NO.
NO.	BY:	DATE:	NO.	BY:	DATE:	S-84
1			3			TOTAL SHEETS
2			4			348

DRAWN BY : P.C. BREWER DATE : 2/1/06
CHECKED BY : A.S. CALLAWAY DATE : 9/26/06

08-FEB-2007 17:01
K:\Structures\pbrewer\Microstation\B2532_sd_BR_01.dgn
pbrewer

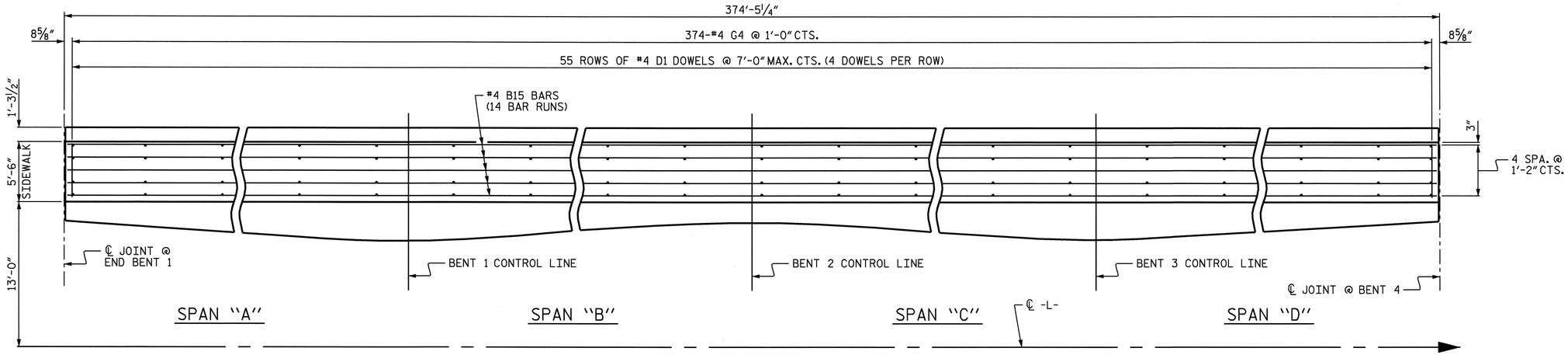

PARTIAL PLAN OF SIDEWALK

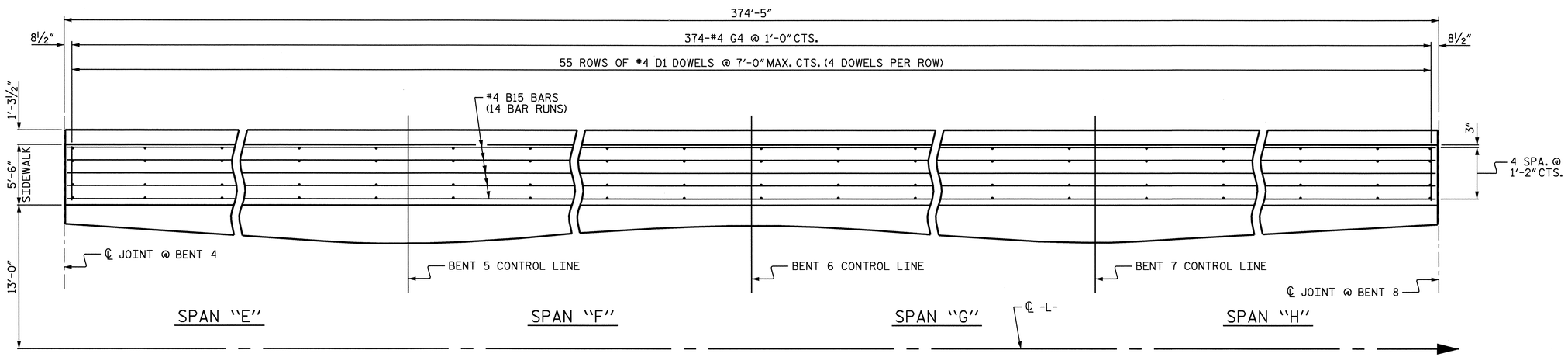

PARTIAL PLAN OF SIDEWALK

NOTES:

THE JOINT IN THE DECK SHALL BE SAWED PRIOR TO THE CASTING OF THE SIDEWALK.

THE SIDEWALK IN A SPAN OR CONTINUOUS UNIT SHALL NOT BE CAST UNTIL ALL CONCRETE IN THE SPAN OR UNIT HAS BEEN CAST AND HAS REACHED A MINIMUM COMPRESSIVE STRENGTH OF 3,000 PSI.

ALL REINFORCING STEEL IN THE SIDEWALK SHALL BE EPOXY COATED.

FOR SIDEWALK QUANTITIES, SEE "BILL OF MATERIAL" SHEET.

FOR SIDEWALK COVER PLATE DETAILS AT END BENTS, SEE "BRIDGE APPROACH SLAB" SHEETS.

FOR SIDEWALK COVER PLATE DETAILS AT BENTS, SEE "TYPICAL SECTIONS" SHEET 5 OF 5.

THE FIRST ROW OF DOWELS ADJACENT TO JOINTS AT END BENTS 1 AND 2 AND BENTS 4, 8, 12, AND 15 ARE TO BE PLACED AFTER THE SAWING OF THE JOINT. THE HOLES SHALL BE DRILLED AND THE DOWELS GROUTED IN PLACE.

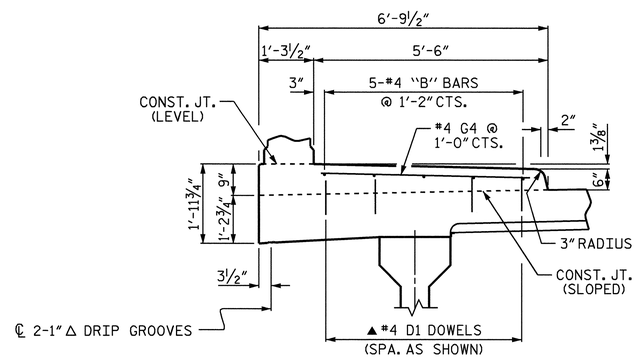

SECTION THROUGH SIDEWALK

▲ DOWELS MAY BE PUSHED INTO GREEN CONCRETE AFTER POUR HAS BEEN SCREEDED OFF.

PROJECT NO. B-2532

CRAVEN COUNTY

STATION: 31+21.29 -L-

SHEET 1 OF 2

STATE OF NORTH CAROLINA
DEPARTMENT OF TRANSPORTATION
RALEIGH

SUPERSTRUCTURE

SIDEWALK DETAILS

NORTH CAROLINA PROFESSIONAL SEAL 21638 ENGINEER LAURA E. SUTTON

Laura E. Sutton 11/30/06

REVISIONS						SHEET NO.
NO.	BY:	DATE:	NO.	BY:	DATE:	S-85
1			3			TOTAL SHEETS
2			4			348

DRAWN BY : P.C. BREWER DATE : 7/26/06
CHECKED BY : A.S. CALLAWAY DATE : 9/8/06

30-NOV-2006 11:35
r:\Structures\pbrewer\Microstation\B2532_sd_SW_01.dgn
lsutton

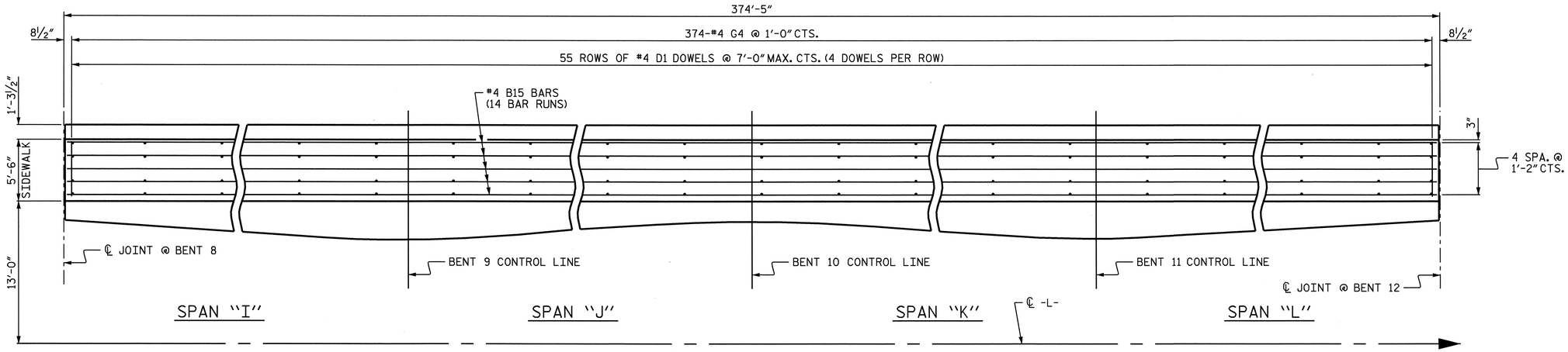

PARTIAL PLAN OF SIDEWALK

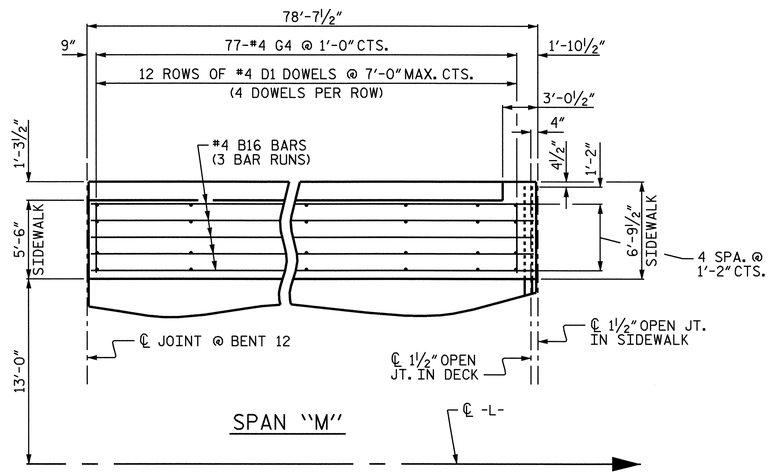

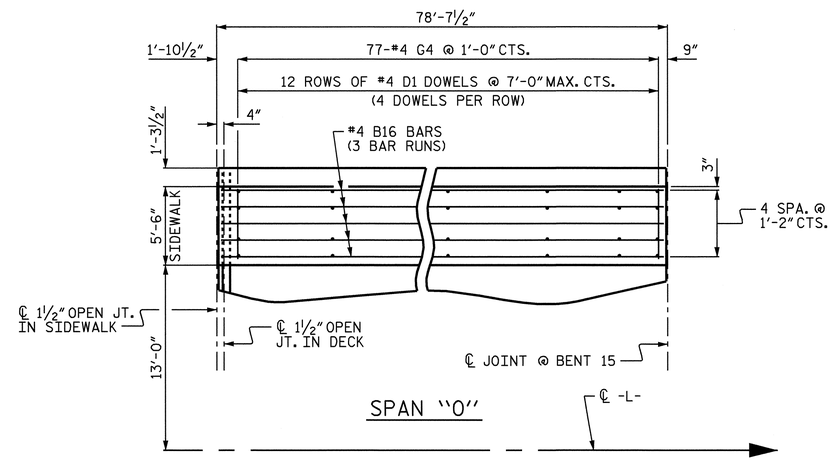

PARTIAL PLAN OF SIDEWALK

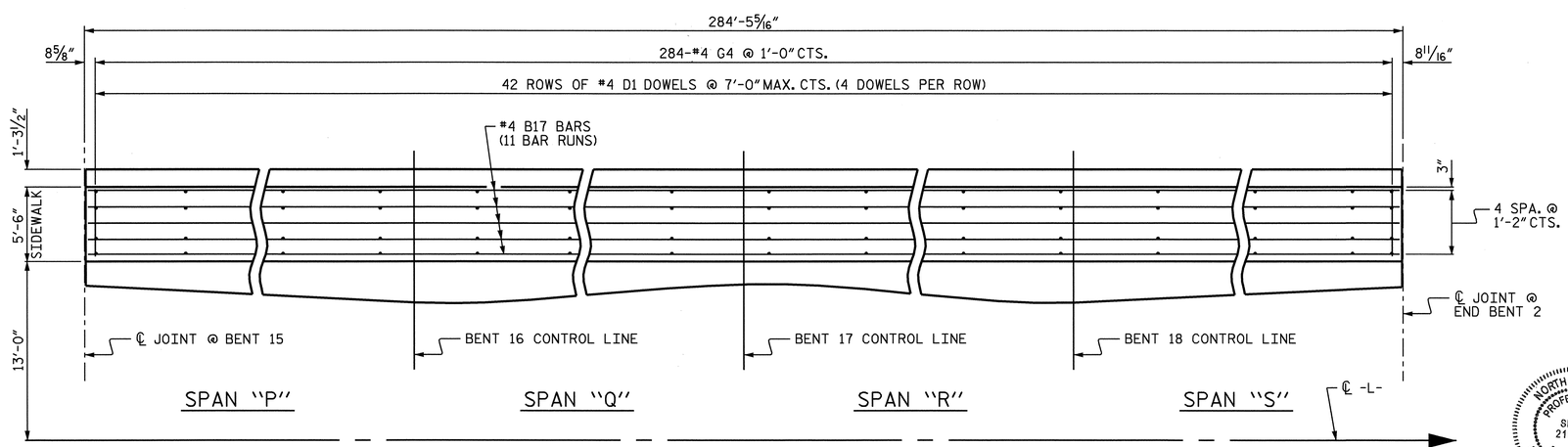

PARTIAL PLAN OF SIDEWALK

PROJECT NO. B-2532

CRAVEN COUNTY

STATION: 31+21.29 -L-

SHEET 2 OF 2

STATE OF NORTH CAROLINA
DEPARTMENT OF TRANSPORTATION
RALEIGH

SUPERSTRUCTURE

SIDEWALK DETAILS

NORTH CAROLINA PROFESSIONAL SEAL 21638 ENGINEER LAURA E. SUTTON

11/30/06

REVISIONS						SHEET NO.
NO.	BY:	DATE:	NO.	BY:	DATE:	S-86
1			3			TOTAL SHEETS
2			4			348

DRAWN BY : P.C. BREWER DATE : 7/26/06
CHECKED BY : A.S. CALLAWAY DATE : 9/8/06

30-NOV-2006 11:35
r:\Structures\pbrewer\Microstation\B2532_sd_SW_01.dgn
lsutton

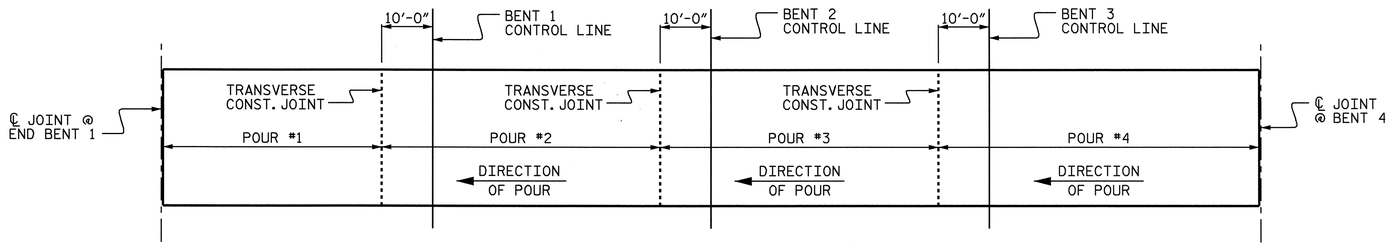

SPANS "A" THROUGH "D"

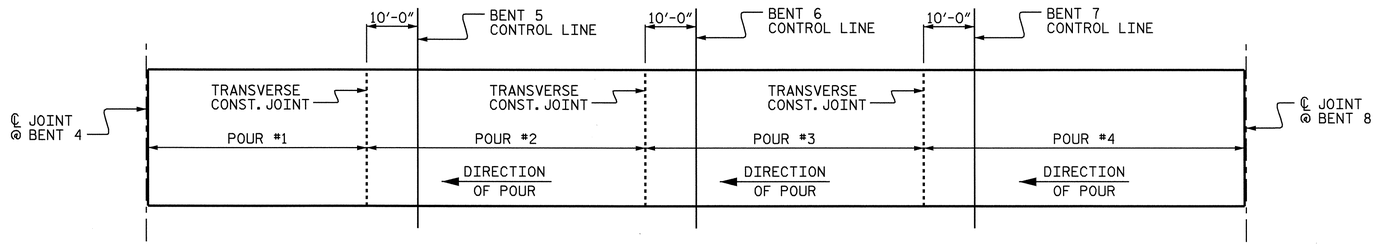

SPANS "E" THROUGH "H"

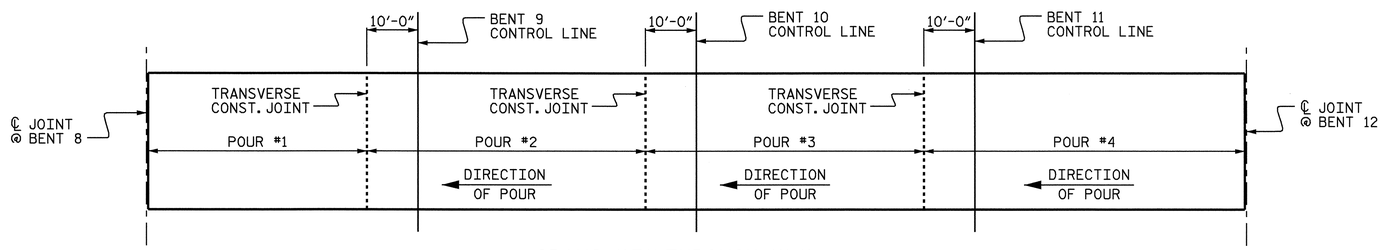

SPANS "I" THROUGH "L"

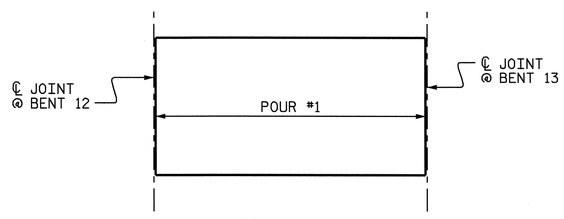

SPAN "M"

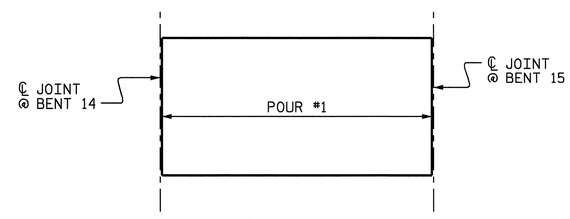

SPAN "O"

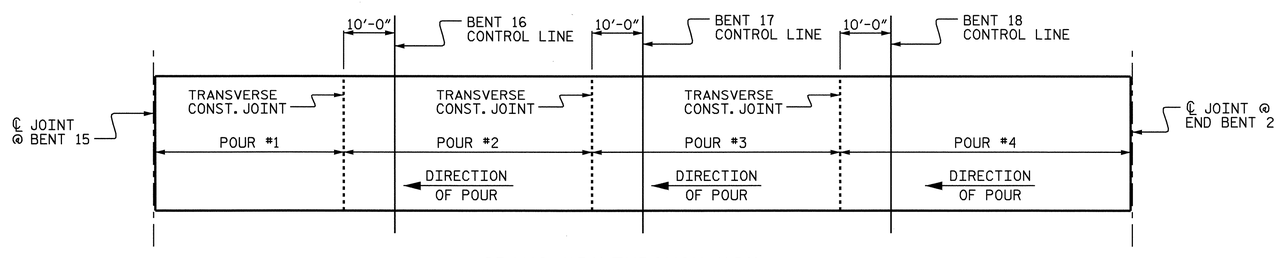

SPANS "P" THROUGH "S"

POURING SEQUENCE

(FOR CLARITY, OUTRIGGERS ARE NOT SHOWN)

PROJECT NO. B-2532

CRAVEN COUNTY

STATION: 31+21.29 -L-

SHEET 1 OF 2

STATE OF NORTH CAROLINA
DEPARTMENT OF TRANSPORTATION
RALEIGH

SUPERSTRUCTURE

POURING SEQUENCE

NORTH CAROLINA PROFESSIONAL SEAL 21638 ENGINEER LAURA E. SUTTON
11/30/06

REVISIONS						SHEET NO.
NO.	BY:	DATE:	NO.	BY:	DATE:	S-87
1			3			TOTAL SHEETS
2			4			348

DRAWN BY : P.C. BREWER DATE : 7/26/06
CHECKED BY : A.S. CALLAWAY DATE : 9/14/06

30-NOV-2006 11:35
r:\Structures\pbrewer\Microstation\B2532_sd_BM_01.dgn
lsutton

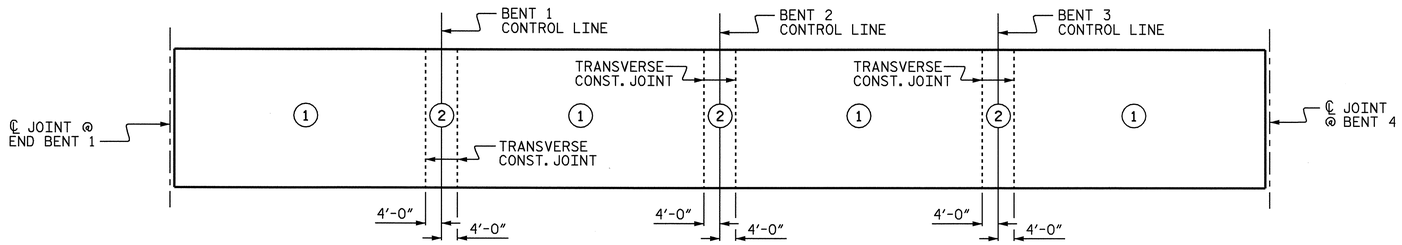

SPANS "A" THROUGH "D"

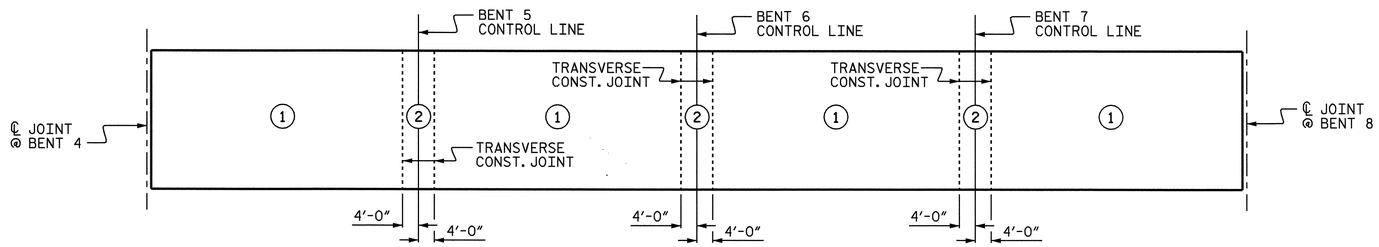

SPANS "E" THROUGH "H"

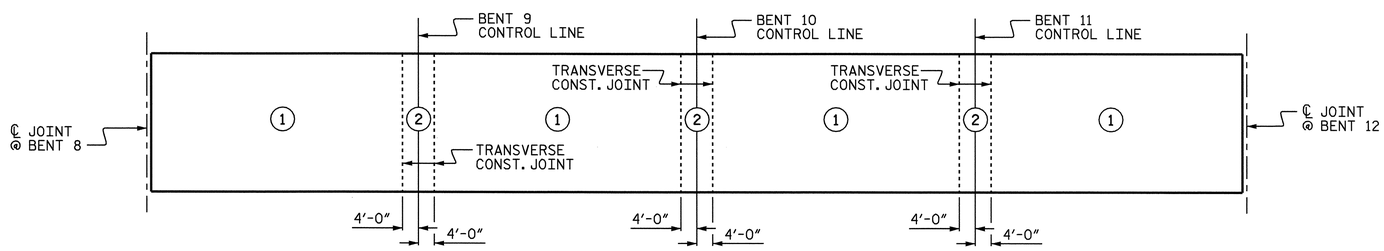

SPANS "I" THROUGH "L"

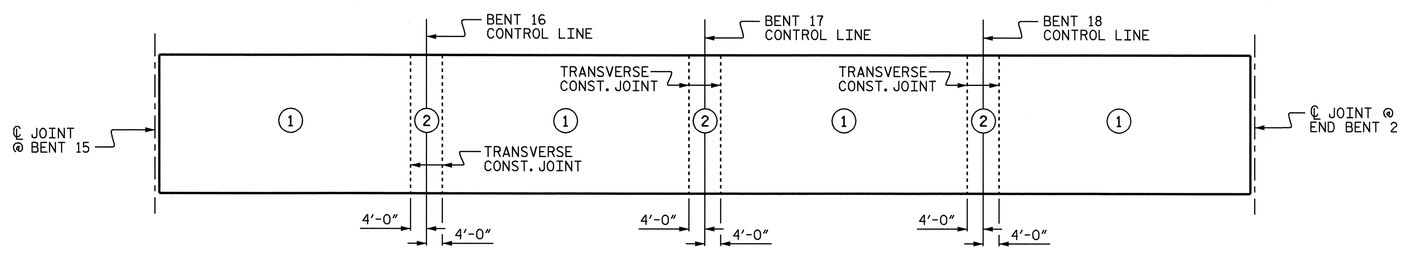

SPANS "P" THROUGH "S"

OPTIONAL POURING SEQUENCE

POUR (2) CAN NOT BE STARTED UNTIL BOTH ADJACENT (1) POURS REACH A MINIMUM OF 3000 PSI.

(FOR CLARITY, OUTRIGGERS ARE NOT SHOWN)

NORTH CAROLINA PROFESSIONAL SEAL 21638 ENGINEER LAURA E. SUTTON
11/30/06

PROJECT NO. B-2532
CRAVEN COUNTY
STATION: 31+21.29 -L-

SHEET 2 OF 2

STATE OF NORTH CAROLINA
DEPARTMENT OF TRANSPORTATION
RALEIGH

SUPERSTRUCTURE

POURING SEQUENCE

REVISIONS						SHEET NO.
NO.	BY:	DATE:	NO.	BY:	DATE:	S-88
1			3			TOTAL SHEETS
2			4			348

DRAWN BY : P.C. BREWER DATE : 7/26/06
CHECKED BY : A.S. CALLAWAY DATE : 9/14/06

30-NOV-2006 11:35
r:\Structures\pbrewer\Microstation\B2532_sd_BM_01.dgn
lsutton

BILL OF MATERIAL

SPANS "A" THROUGH "D"

BAR	NO.	SIZE	TYPE	LENGTH	WEIGHT
✱ A1	1380	#5	STR	35'-9"	51456
✱ B1	132	#4	STR	22'-0"	1940
✱ B2	287	#5	STR	55'-7"	16638
✱ B3	387	#5	STR	24'-0"	9687
✱ B4	126	#5	STR	28'-6"	3745
✱ B5	56	#4	STR	28'-7"	1069
✱ B6	88	#4	STR	16'-5"	965
✱ B15	70	#4	STR	28'-7"	1337
✱ D1	220	#4	STR	0'-8"	98
✱ G1	2	#5	STR	35'-9"	75
✱ G4	374	#4	STR	5'-0"	1249
✱ K1	8	#8	2	13'-11"	297
✱ K2	8	#8	3	21'-0"	449
✱ K3	18	#4	STR	5'-10"	70
✱ K4	72	#4	STR	7'-7"	365
✱ K5	15	#4	STR	29'-1"	291
✱ S1	48	#5	4	6'-1"	305
✱ S2	270	#4	1	2'-9"	496
✱ U1	54	#4	3	15'-3"	550
✱ U2	18	#4	3	13'-3"	159

✱ EPOXY COATED REINFORCING STEEL = 91,241 LBS

SPANS "E" THROUGH "H"

BAR	NO.	SIZE	TYPE	LENGTH	WEIGHT
✱ A1	1380	#5	STR	35'-9"	51456
✱ B1	132	#4	STR	22'-0"	1940
✱ B2	287	#5	STR	55'-7"	16638
✱ B3	387	#5	STR	24'-0"	9687
✱ B4	126	#5	STR	28'-6"	3745
✱ B5	56	#4	STR	28'-7"	1069
✱ B6	88	#4	STR	16'-5"	965
✱ B15	70	#4	STR	28'-7"	1337
✱ D1	220	#4	STR	0'-8"	98
✱ G1	2	#5	STR	35'-9"	75
✱ G4	374	#4	STR	5'-0"	1249
✱ K1	8	#8	2	13'-11"	297
✱ K2	8	#8	3	21'-0"	449
✱ K3	18	#4	STR	5'-10"	70
✱ K4	72	#4	STR	7'-7"	365
✱ K5	15	#4	STR	29'-1"	291
✱ S1	48	#5	4	6'-1"	305
✱ S2	270	#4	1	2'-9"	496
✱ U1	54	#4	3	15'-3"	550
✱ U2	18	#4	3	13'-3"	159

✱ EPOXY COATED REINFORCING STEEL = 91,241 LBS

SPANS "I" THROUGH "L"

BAR	NO.	SIZE	TYPE	LENGTH	WEIGHT
✱ A1	1380	#5	STR	35'-9"	51456
✱ B1	132	#4	STR	22'-0"	1940
✱ B2	287	#5	STR	55'-7"	16638
✱ B3	387	#5	STR	24'-0"	9687
✱ B4	126	#5	STR	28'-6"	3745
✱ B5	56	#4	STR	28'-7"	1069
✱ B6	88	#4	STR	16'-5"	965
✱ B15	70	#4	STR	28'-7"	1337
✱ D1	220	#4	STR	0'-8"	98
✱ G1	2	#5	STR	35'-9"	75
✱ G4	374	#4	STR	5'-0"	1249
✱ K1	8	#8	2	13'-11"	297
✱ K2	8	#8	3	21'-0"	449
✱ K3	18	#4	STR	5'-10"	70
✱ K4	72	#4	STR	7'-7"	365
✱ K5	15	#4	STR	29'-1"	291
✱ K10	12	#5	STR	8'-3"	103
✱ K11	12	#5	STR	7'-9"	97
✱ S1	48	#5	4	6'-1"	305
✱ S2	270	#4	1	2'-9"	496
✱ S5	48	#4	5	6'-3"	200
✱ U1	54	#4	3	15'-3"	550
✱ U2	18	#4	3	13'-3"	159

✱ EPOXY COATED REINFORCING STEEL = 91,641 LBS

SPAN "M" OR SPAN "O"

BAR	NO.	SIZE	TYPE	LENGTH	WEIGHT
✱ A2	280	#5	STR	47'-9"	13945
✱ B7	102	#4	STR	27'-2"	1851
✱ B8	106	#5	STR	39'-11"	4413
✱ B16	15	#4	STR	27'-3"	273
✱ D1	48	#4	STR	0'-8"	21
✱ G2	2	#5	STR	47'-9"	100
✱ G3	3	#8	STR	35'-9"	286
✱ G4	77	#4	STR	5'-0"	257
✱ K1	4	#8	2	13'-11"	149
✱ K2	8	#8	3	21'-0"	449
✱ K6	4	#8	2	10'-11"	117
✱ K7	8	#8	3	15'-0"	320
✱ K8	16	#5	STR	4'-4"	72
✱ K9	8	#5	STR	2'-3"	19
✱ S1	48	#5	4	6'-1"	305
✱ S3	12	#5	4	11'-11"	149
✱ S4	8	#5	4	9'-11"	83
✱ S6	58	#4	6	5'-0"	194

✱ EPOXY COATED REINFORCING STEEL = 23,003 LBS

SPANS "P" THROUGH "S"

BAR	NO.	SIZE	TYPE	LENGTH	WEIGHT
✱ A1	1048	#5	STR	35'-9"	39077
✱ B9	88	#4	STR	24'-2"	1421
✱ B10	205	#5	STR	58'-10"	12579
✱ B11	129	#5	STR	53'-4"	7176
✱ B12	126	#5	STR	21'-8"	2847
✱ B13	44	#4	STR	21'-11"	644
✱ B14	44	#4	STR	27'-8"	813
✱ B17	55	#4	STR	27'-8"	1016
✱ D1	168	#4	STR	0'-8"	75
✱ G1	2	#5	STR	35'-9"	75
✱ G4	284	#4	STR	5'-0"	949
✱ K1	8	#8	2	13'-11"	297
✱ K2	8	#8	3	21'-0"	449
✱ K3	18	#4	STR	5'-10"	70
✱ K4	72	#4	STR	7'-7"	365
✱ K5	15	#4	STR	29'-1"	291
✱ K10	12	#5	STR	8'-3"	103
✱ K11	12	#5	STR	7'-9"	97
✱ S1	48	#5	4	6'-1"	305
✱ S2	270	#4	1	2'-9"	496
✱ S5	48	#4	5	6'-3"	200
✱ U1	54	#4	3	15'-3"	550
✱ U2	18	#4	3	13'-3"	159

✱ EPOXY COATED REINFORCING STEEL = 70,054 LBS

✱ ALL BARS ARE EPOXY COATED

BAR TYPES

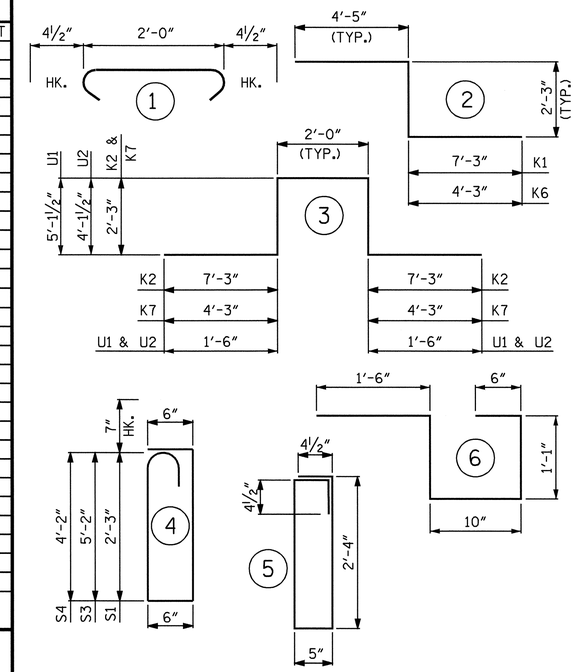

ALL BAR DIMENSIONS ARE OUT TO OUT.

GROOVING BRIDGE FLOORS

APPROACH SLABS	1,185 SQ.FT.
BRIDGE DECK	40,743 SQ.FT.
TOTAL	41,928 SQ.FT.

SUPERSTRUCTURE REINFORCING STEEL LENGTHS ARE BASED ON THE FOLLOWING MINIMUM SPLICE LENGTHS

BAR SIZE	SUPERSTRUCTURE EXCEPT APPROACH SLABS, PARAPET, AND BARRIER RAIL		APPROACH SLABS		PARAPET AND BARRIER RAIL
	EPOXY COATED	UNCOATED	EPOXY COATED	UNCOATED	
#4	2'-0"	1'-9"	2'-0"	1'-9"	2'-9"
#5	2'-6"	2'-2"	2'-6"	2'-2"	3'-5"
#6	3'-0"	2'-7"	3'-10"	2'-7"	4'-4"
#7	5'-3"	3'-6"	—	—	—
#8	6'-10"	4'-7"	—	—	—

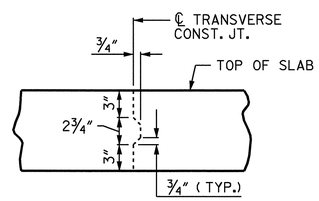

TRANSVERSE CONSTRUCTION JOINT DETAIL

NOTE: REINFORCING STEEL IN SLAB NOT SHOWN. LONGITUDINAL REINFORCING STEEL SHALL BE CONTINUOUS THROUGH JOINT

SUPERSTRUCTURE BILL OF MATERIAL

	CLASS AA CONCRETE (CU. YDS.)						EPOXY COATED REINFORCING STEEL
	POUR #1	POUR #2	POUR #3	POUR #4	SIDEWALK	TOTAL	(LBS.)
SPANS "A" THROUGH "D"	107.0	129.3	129.3	143.0	59.1	567.7	91,241
SPANS "E" THROUGH "H"	106.9	129.3	129.3	143.0	59.1	567.6	91,241
SPANS "I" THROUGH "L"	106.9	129.3	131.3	145.1	59.1	571.7	91,641
SPAN "M"	137.7	--	--	--	12.3	150.0	23,003
SPAN "O"	137.7	--	--	--	12.3	150.0	23,003
SPANS "P" THROUGH "S"	80.5	102.9	100.9	114.9	44.9	444.1	70,054
▲■ TOTALS						2,483.7	390,183

■ QUANTITIES FOR CLASSIC RAIL ARE NOT INCLUDED
▲ FOR TRAFFIC GATE OUTRIGGER AND LIGHTING OUTRIGGER QUANTITIES, SEE OUTRIGGER SHEETS.

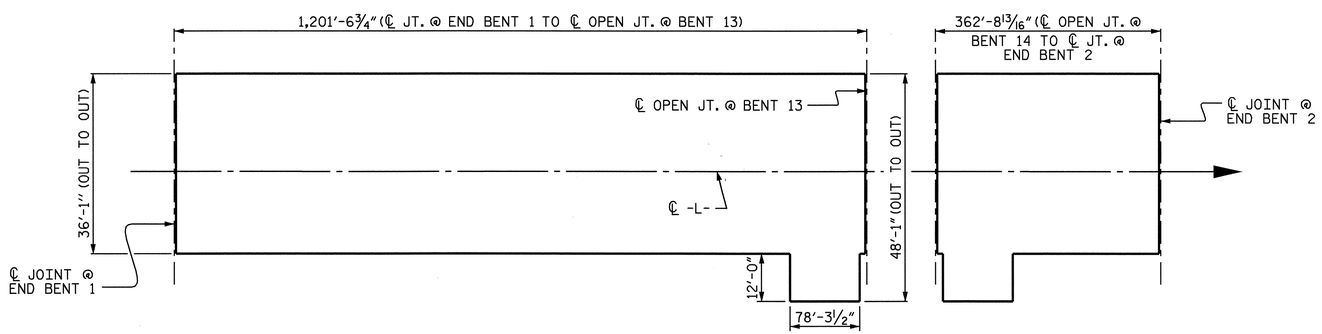

LAYOUT FOR COMPUTING AREA OF REINFORCED CONCRETE DECK SLAB (SQ. FT. = 58,324)

PROJECT NO. B-2532
CRAVEN COUNTY
STATION: 31+21.29 -L-

STATE OF NORTH CAROLINA
DEPARTMENT OF TRANSPORTATION
RALEIGH

SUPERSTRUCTURE
BILL OF MATERIAL
(APPROACH SPANS ONLY)

NORTH CAROLINA PROFESSIONAL SEAL 21638 ENGINEER LAURA E. SUTTON
11/30/06

REVISIONS						SHEET NO.
NO.	BY:	DATE:	NO.	BY:	DATE:	S-89
1			3			TOTAL SHEETS
2			4			348

DRAWN BY : P.C. BREWER DATE : 7/26/06
CHECKED BY : A.S. CALLAWAY DATE : 9/14/06

30-NOV-2006 11:35
r:\Structures\pbrewer\Microstation\B2532_sd_BM_01.dgn
lsutton

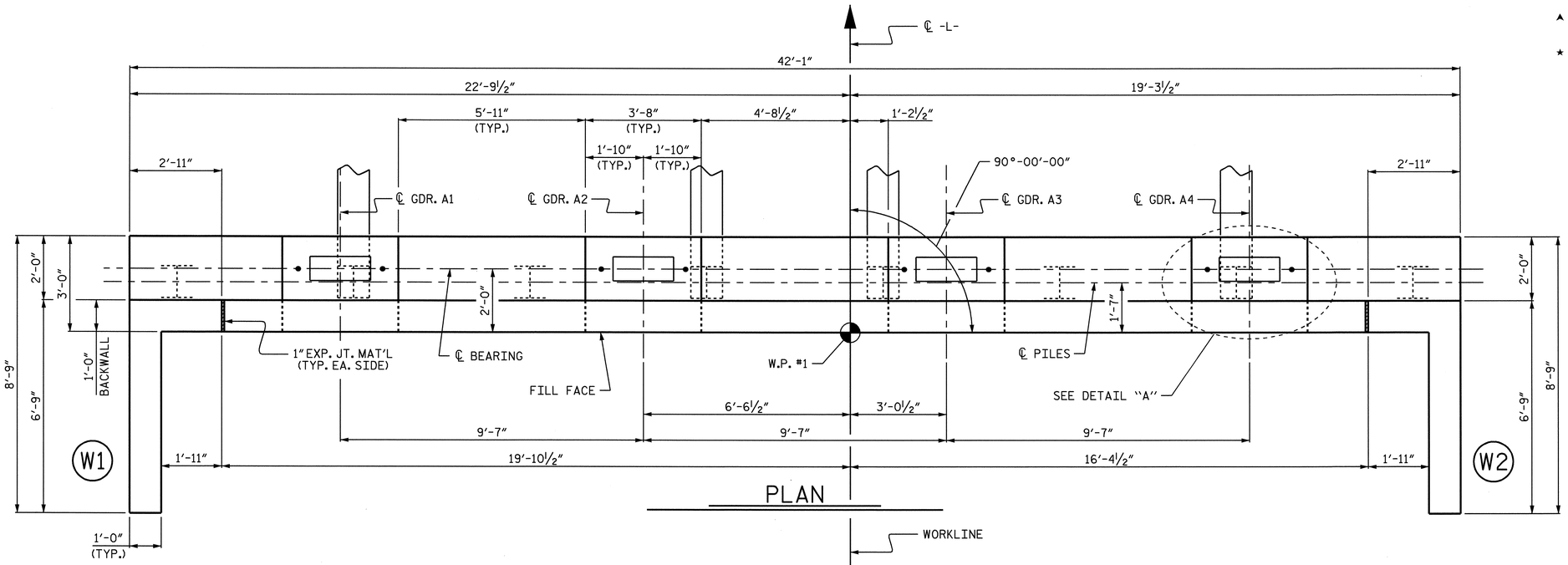

PLAN

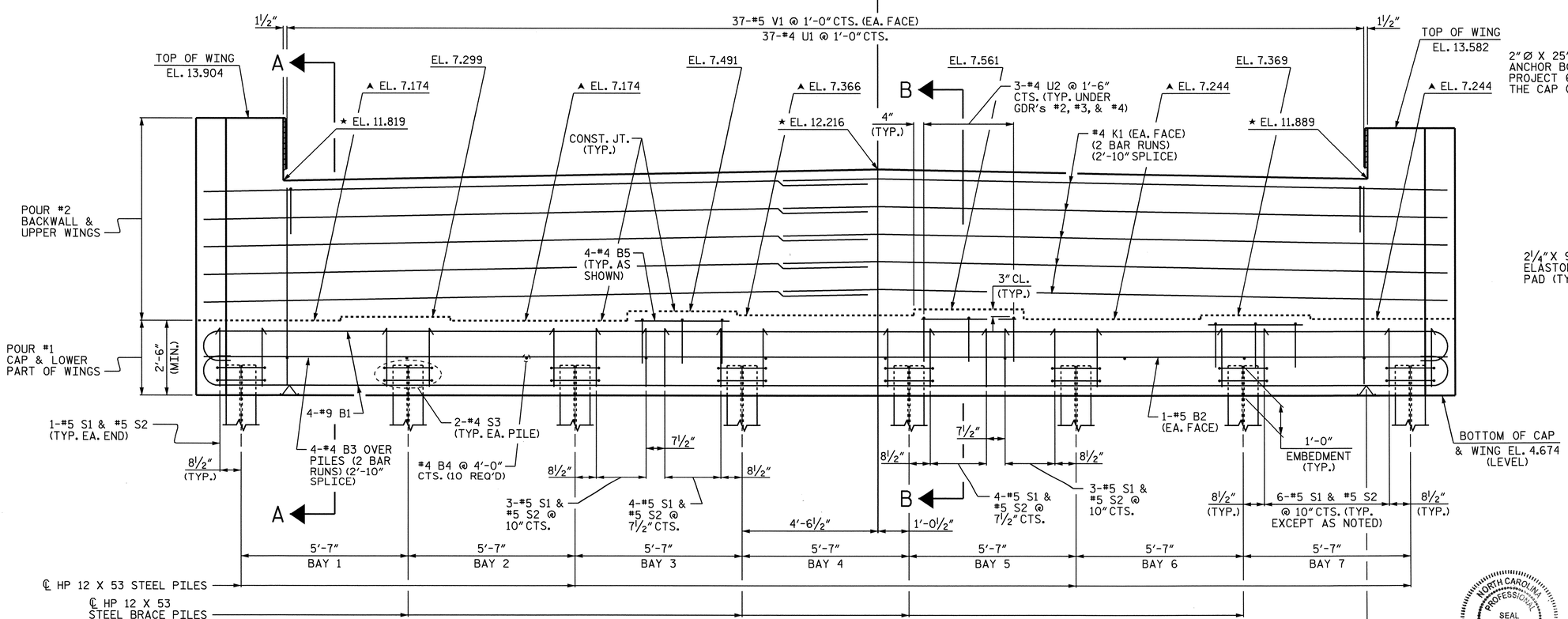

ELEVATION

NOTES:

▲ FOR LOCATION OF ELEVATION BETWEEN BRIDGE SEATS, SEE SECTION A-A ON SHEET 3 OF 3.

★ THIS ELEVATION TAKEN ON FILL FACE OF BACKWALL.

STIRRUPS AND U2 BARS IN CAP MAY BE SHIFTED AS NECESSARY TO CLEAR ANCHOR BOLTS.

#5 V1 BARS IN BACKWALL SHALL BE PLACED 3" CLEAR FROM THE TOP OF THE BACKWALL.

THE TOP SURFACE AREAS OF THE END BENT SHALL BE CURED IN ACCORDANCE WITH THE STANDARD SPECIFICATIONS EXCEPT THE MEMBRANE CURING COMPOUND METHOD SHALL NOT BE USED.

BACKWALL SHALL BE PLACED BEFORE APPLYING THE EPOXY PROTECTIVE COATING.

THE TOP SURFACE OF THE CAP EXCEPT THE BRIDGE SEAT BUILDUPS SHALL BE SLOPED TRANSVERSELY FROM THE FILL FACE TO THE BACK FACE AT THE RATE OF 2%.

THE CONTRACTOR SHALL PROVIDE FOR INSTALLATION OF THE 4" DIAMETER DRAIN PIPE THROUGH THE WING WALL AS REQUIRED FOR REINFORCED BRIDGE APPROACH FILLS, SEE THE ROADWAY PLANS. REINFORCING STEEL IN THE WING WALL MAY BE SHIFTED AS NECESSARY TO CLEAR THE DRAIN PIPE.

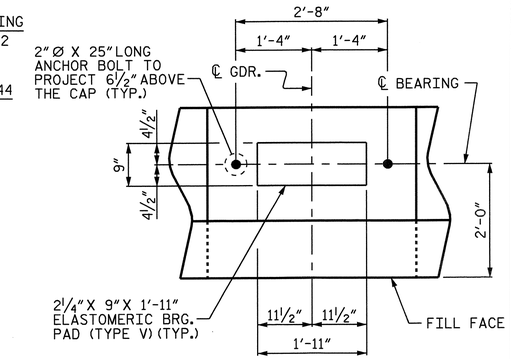

DETAIL "A"

(TYP. EA. GIRDER)

PROJECT NO. B-2532

CRAVEN COUNTY

STATION: 31+21.29 -L-

SHEET 1 OF 3

STATE OF NORTH CAROLINA
DEPARTMENT OF TRANSPORTATION
RALEIGH

SUBSTRUCTURE

END BENT 1

NORTH CAROLINA PROFESSIONAL SEAL 21638 ENGINEER LAURA E. SUTTON
11/30/06

REVISIONS								SHEET NO.
NO.	BY:	DATE:	NO.	BY:	DATE:			S-90
1			3					TOTAL SHEETS
2			4					348

DRAWN BY : P.C. BREWER DATE : 5/2/06
CHECKED BY : B.L. GREEN DATE : 5/06

24-OCT-2006 14:40
r:\Structures\pbrewer\Microstation\B2532_sd_EB_01.dgn
LSUTTON

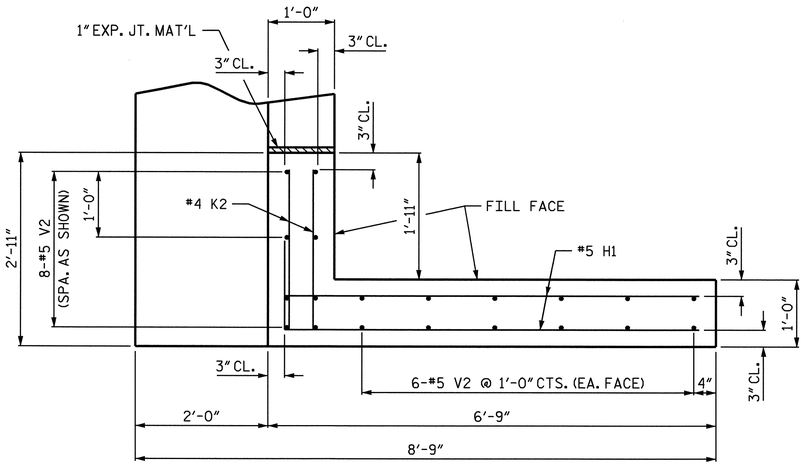

PLAN OF WING (W1)

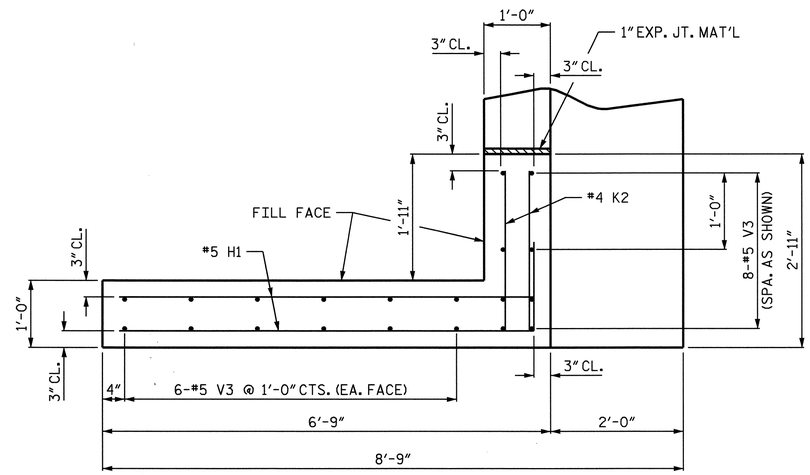

PLAN OF WING (W2)

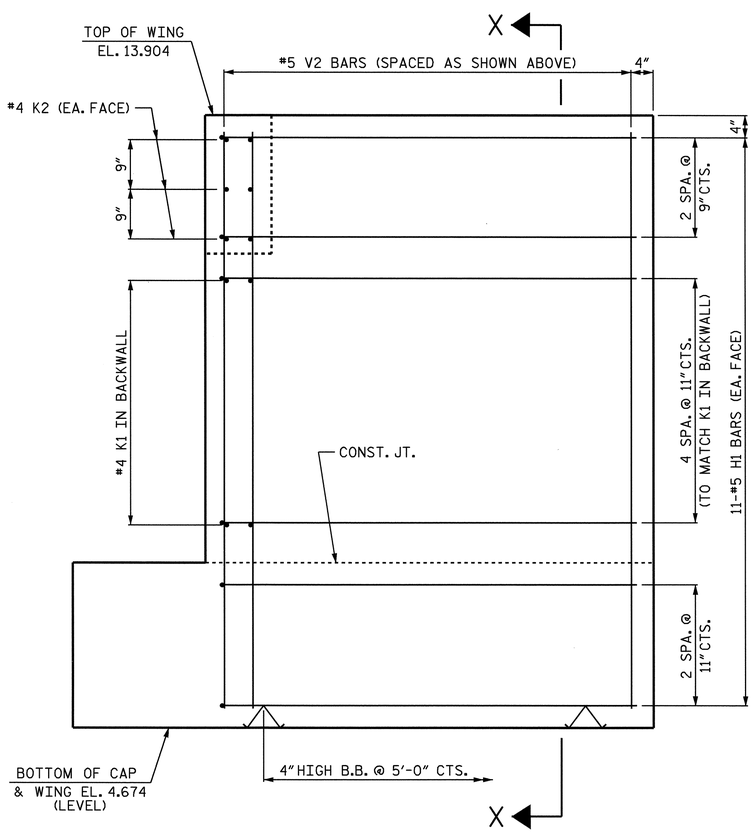

ELEVATION OF WING (W1)

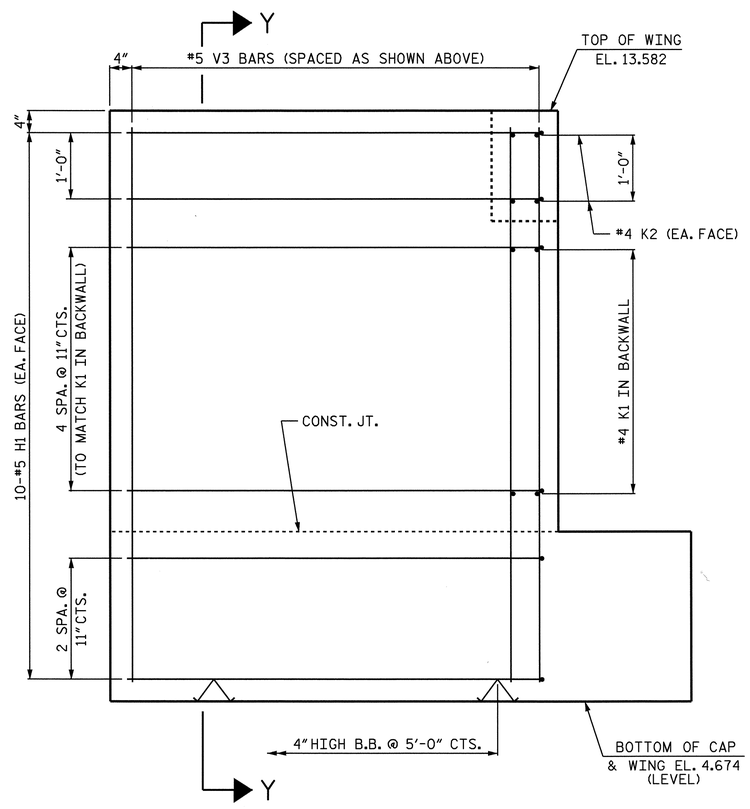

ELEVATION OF WING (W2)

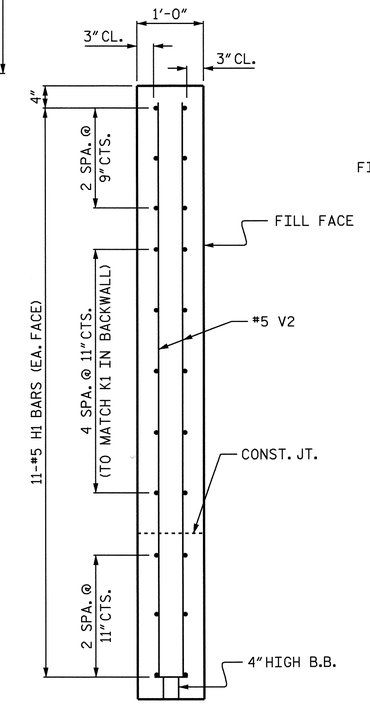

SECTION X-X

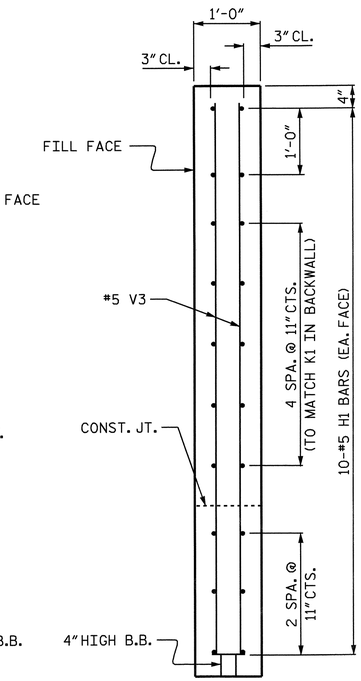

SECTION Y-Y

PROJECT NO. B-2532

CRAVEN COUNTY

STATION: 31+21.29 -L-

SHEET 2 OF 3

STATE OF NORTH CAROLINA
DEPARTMENT OF TRANSPORTATION
RALEIGH

SUBSTRUCTURE

END BENT 1

NORTH CAROLINA PROFESSIONAL SEAL 21638 ENGINEER LAURA E. SUTTON
11/30/06

REVISIONS						SHEET NO.
NO.	BY:	DATE:	NO.	BY:	DATE:	S-91
1			3			TOTAL SHEETS
2			4			348

DRAWN BY : P.C. BREWER DATE : 5/2/06
CHECKED BY : B.L. GREEN DATE : 5/06

24-OCT-2006 14:40
r:\Structures\pbrewer\Microstation\B2532_sd_EB_01.dgn
LSUTTON

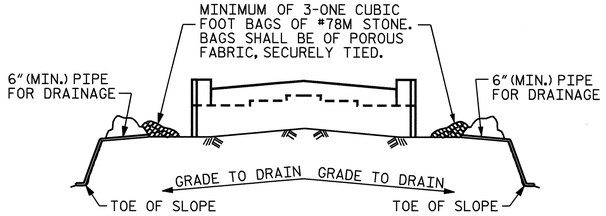

BAGGED STONE AND PIPE SHALL BE PLACED IMMEDIATELY AFTER COMPLETION OF END BENT EXCAVATION. PIPE MAY BE EITHER CONCRETE, CORRUGATED STEEL, CORRUGATED ALUMINUM ALLOY, OR CORRUGATED PLASTIC. PERFORATED PIPE WILL NOT BE ALLOWED.

BAGGED STONE SHALL REMAIN IN PLACE UNTIL THE ENGINEER DIRECTS THAT IT BE REMOVED. THE CONTRACTOR SHALL REMOVE AND DISPOSE OF SILT ACCUMULATIONS AT BAGGED STONE WHEN SO DIRECTED BY THE ENGINEER. BAGS SHALL BE REMOVED AND REPLACED WHENEVER THE ENGINEER DETERMINES THAT THEY HAVE DETERIORATED AND LOST THEIR EFFECTIVENESS.

NO SEPARATE PAYMENT WILL BE MADE FOR THIS WORK AND THE ENTIRE COST OF THIS WORK SHALL BE INCLUDED IN THE UNIT CONTRACT PRICE BID FOR THE SEVERAL PAY ITEMS.

TEMPORARY DRAINAGE AT END BENT

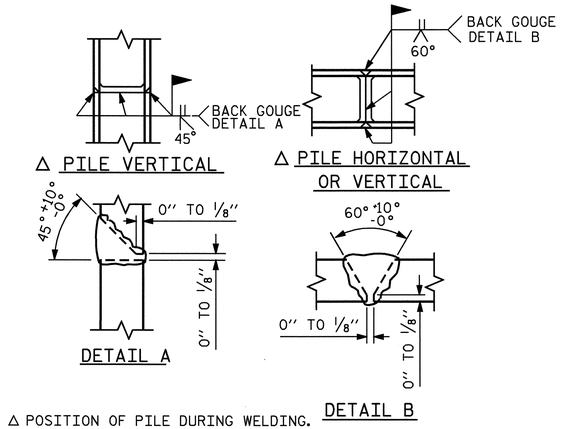

△ POSITION OF PILE DURING WELDING.

PILE SPLICE DETAILS

BAR TYPES

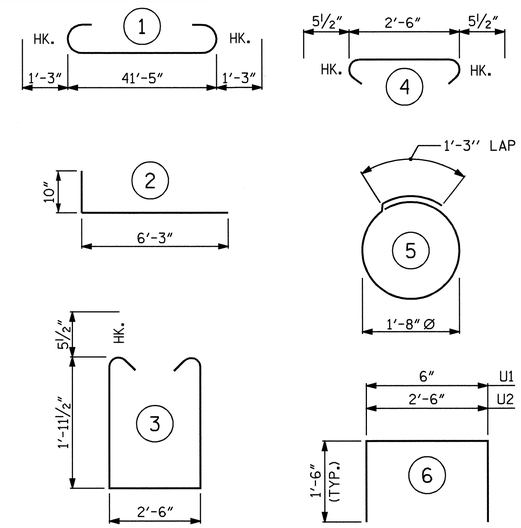

ALL BAR DIMENSIONS ARE OUT TO OUT.

BILL OF MATERIAL
END BENT 1

BAR	NUMBER	SIZE	TYPE	LENGTH	WEIGHT
✱B1	8	9	1	43'-11"	1195
✱B2	2	5	STR	41'-7"	87
✱B3	8	4	STR	22'-3"	119
✱B4	10	4	STR	2'-6"	17
✱B5	12	4	STR	3'-2"	25
✱H1	42	5	2	7'-1"	310
✱K1	20	4	STR	22'-3"	297
✱K2	10	4	STR	2'-5"	16
✱S1	46	5	3	7'-4"	352
✱S2	46	5	4	3'-5"	164
✱S3	16	4	5	6'-6"	69
✱U1	37	4	6	3'-6"	87
✱U2	9	4	6	5'-6"	33
✱V1	74	5	STR	6'-6"	502
✱V2	20	5	STR	8'-7"	179
✱V3	20	5	STR	8'-3"	172

✱ EPOXY COATED REINFORCING STEEL 3,624 LBS.

CLASS AA CONCRETE BREAKDOWN:

POUR #1 - CAP & LOWER WINGS 13.4 C.Y.
POUR #2 - BACKWALL & UPPER WINGS 10.5 C.Y.
TOTAL 23.9 C.Y.

HP 12 x 53 STEEL PILES
NO. = 8 LIN. FEET = 400

PILE REDRIVES 8 EACH

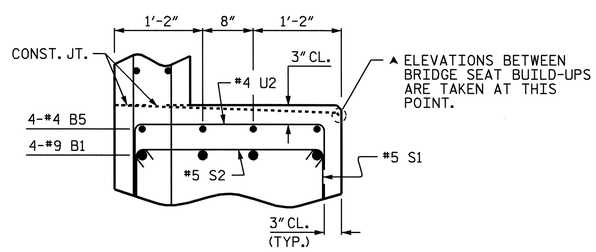

PARTIAL SECTION B-B

(TYP. UNDER GDR's #2, #3, & #4)

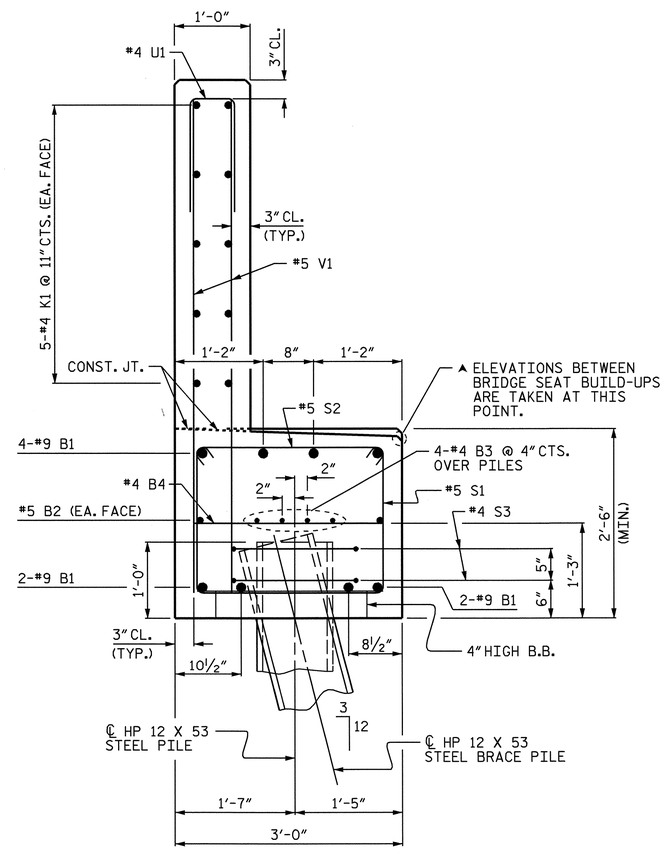

SECTION A-A

NORTH CAROLINA PROFESSIONAL SEAL 21638 ENGINEER LAURA E. SUTTON
11/20/06

PROJECT NO. B-2532
CRAVEN COUNTY
STATION: 31+21.29 -L-

SHEET 3 OF 3

STATE OF NORTH CAROLINA
DEPARTMENT OF TRANSPORTATION
RALEIGH

SUBSTRUCTURE

END BENT 1

REVISIONS						SHEET NO.
NO.	BY:	DATE:	NO.	BY:	DATE:	S-92
1			3			TOTAL SHEETS
2			4			348

DRAWN BY : P.C. BREWER DATE : 5/2/06
CHECKED BY : B.L. GREEN DATE : 5/06

24-OCT-2006 14:40
r:\Structures\pbrewer\Microstation\B2532_sd_EB_01.dgn
LSUTTON

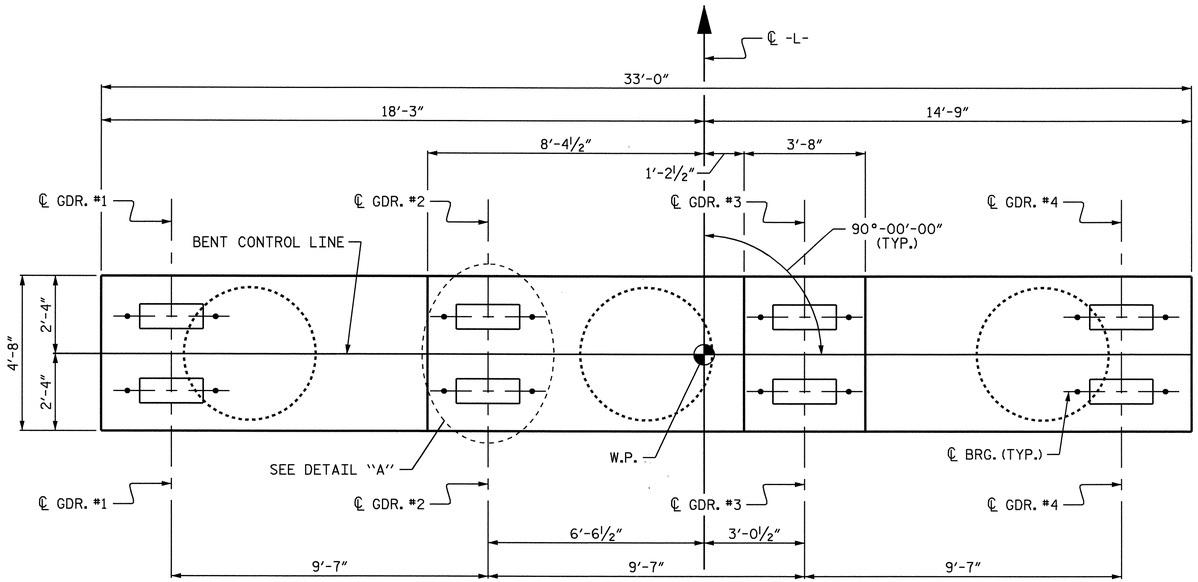

PLAN

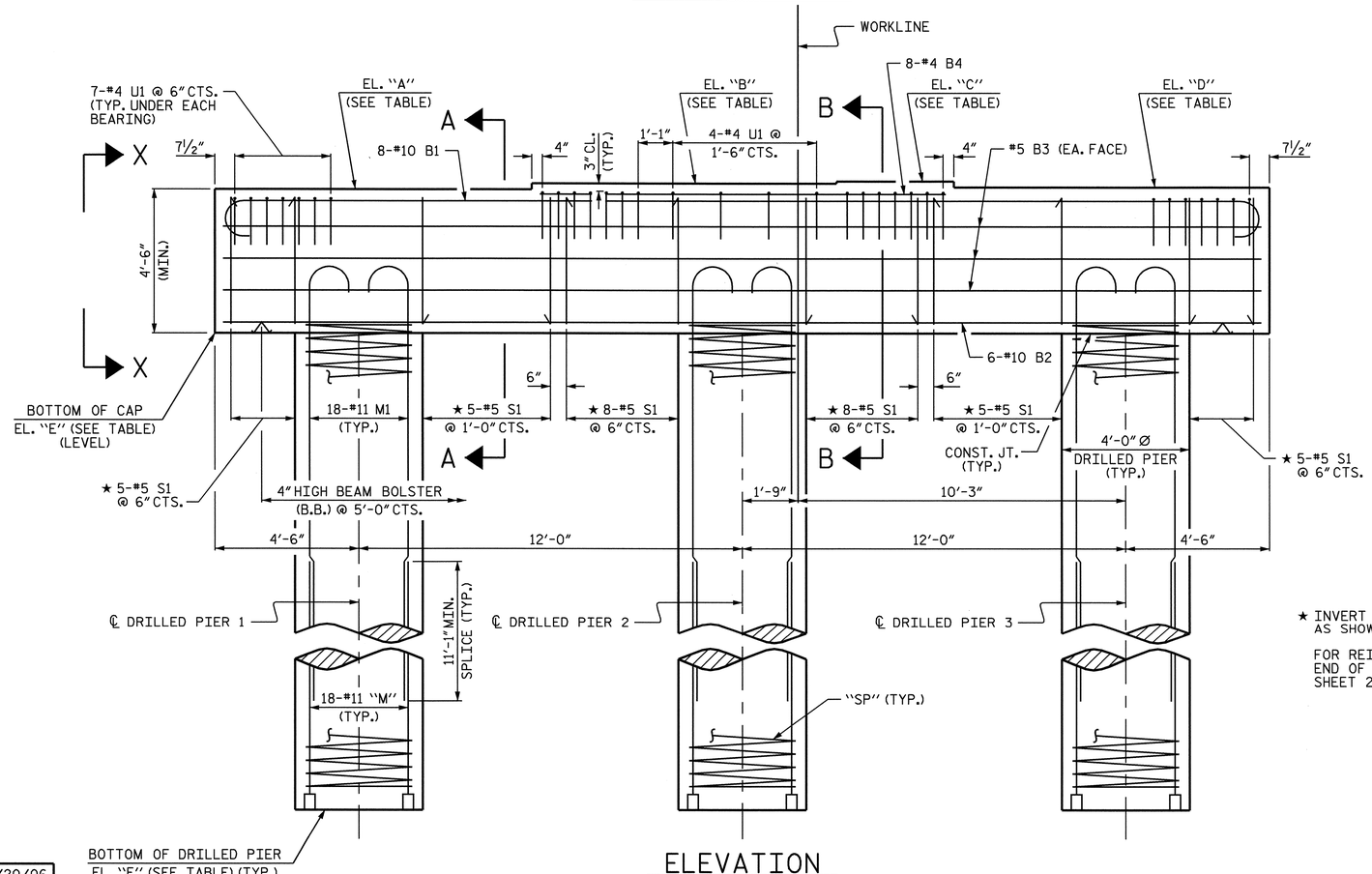

ELEVATION

★ INVERT ALTERNATE STIRRUPS AS SHOWN.

FOR REINFORCING STEEL IN END OF CAP, SEE VIEW X-X, SHEET 2 OF 2.

NOTES:

STIRRUPS AND U1 BARS IN CAP MAY BE SHIFTED AS NECESSARY TO CLEAR ANCHOR BOLTS.

HOOKS ON "M" BARS MAY BE TURNED AS NECESSARY FOR PLACING REINFORCING STEEL.

ALL STEEL IN THE DRILLED PIERS IS INCLUDED IN THE PAY ITEMS FOR "EPOXY COATED REINFORCING STEEL" AND "EPOXY COATED SPIRAL COLUMN REINFORCING STEEL".

THE CONTRACTOR'S ATTENTION IS CALLED TO THE FACT THAT THE LONGITUDINAL REINFORCEMENT FOR THE DRILLED PIERS IS DETAILED WITH 3 FEET OF EXTRA LENGTH.

FOR DRILLED PIERS, SEE SPECIAL PROVISIONS.

METALLIZE THE PERMANENT STEEL CASINGS FOR DRILLED PIERS FROM THE TOP OF THE DRILLED PIERS TO ELEVATION -3.000. NO FIELD SPLICING OF THE CASINGS IS ALLOWED IN THE METALLIZED ZONE. REPAIR DAMAGED COATINGS IN ACCORDANCE WITH THE THERMAL SPRAYED COATINGS (METALLIZATION) SPECIAL PROVISION FOR EXPOSED SURFACES.

ELEVATION TABLE

	EL. "A"	EL. "B"	EL. "C"	EL. "D"	EL. "E"	EL. "F"
BENT 1	8.221	8.412	8.482	8.291	3.721	-62.279
BENT 2	9.079	9.271	9.341	9.149	4.579	-62.171
BENT 3	9.866	10.058	10.128	9.936	5.366	-62.134

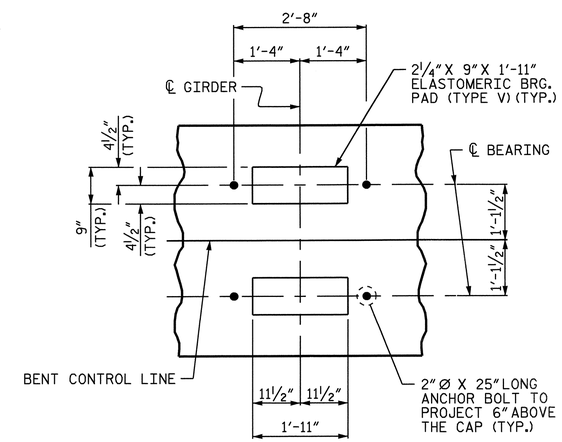

DETAIL "A"

(TYP. EA. GIRDER)

PROJECT NO. B-2532

CRAVEN COUNTY

STATION: 31+21.29 -L-

SHEET 1 OF 2

STATE OF NORTH CAROLINA
DEPARTMENT OF TRANSPORTATION
RALEIGH

SUBSTRUCTURE

BENTS 1-3

NORTH CAROLINA PROFESSIONAL SEAL 21838 ENGINEER LAURA E. SUTTON
11/30/06

REVISIONS						SHEET NO.
NO.	BY:	DATE:	NO.	BY:	DATE:	S-93
1			3			TOTAL SHEETS
2			4			348

DRAWN BY : P.C. BREWER DATE : 7/20/06
CHECKED BY : B.L. GREEN DATE : 7/20/06

24-OCT-2006 14:40
r:\Structures\pbrewer\Microstation\B2532_sd_BT_01.dgn
LSUTTON

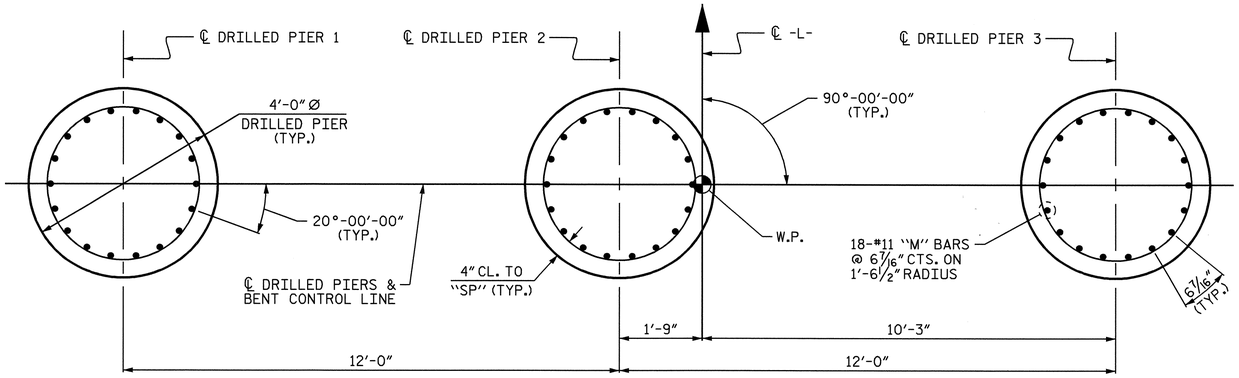

PLAN OF DRILLED PIERS

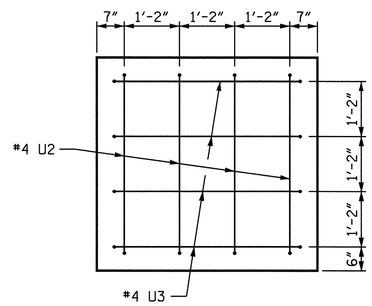

VIEW X-X

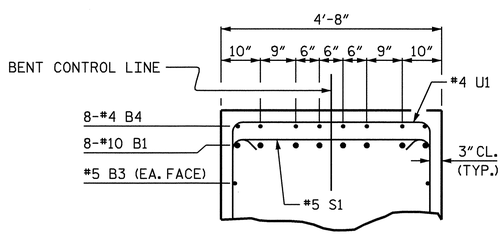

SECTION B-B

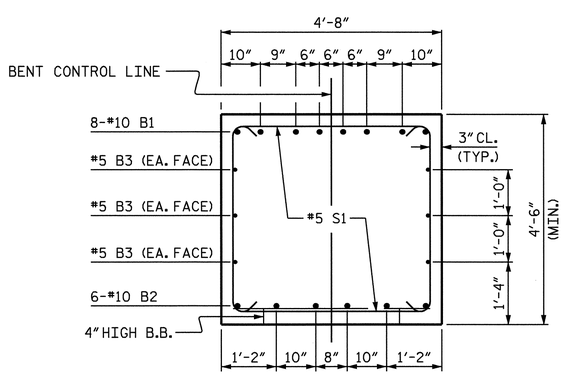

SECTION A-A

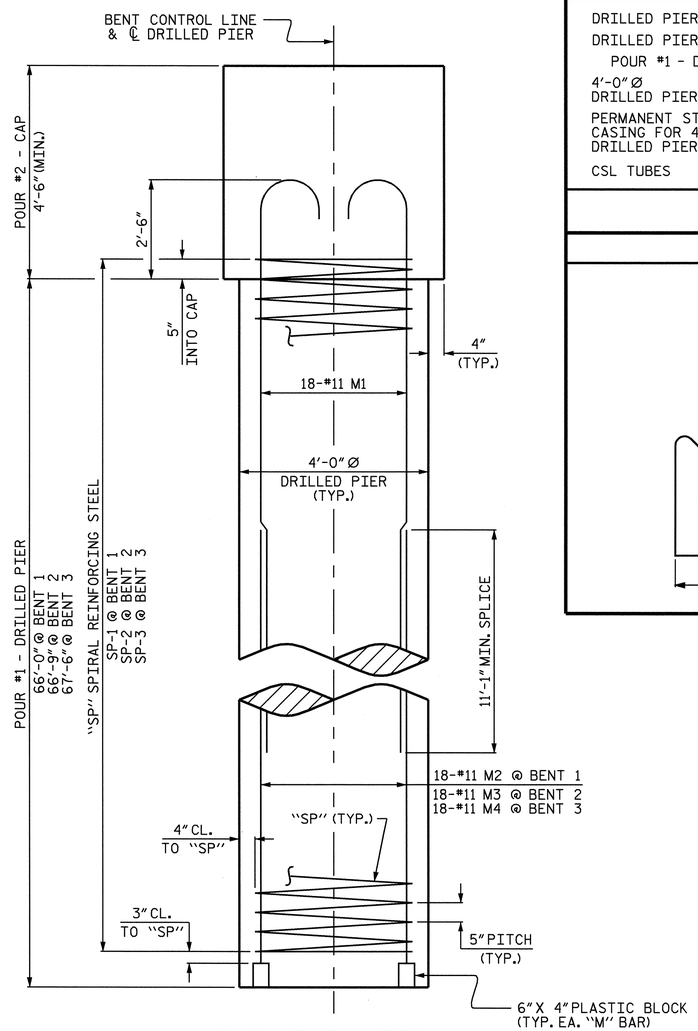

END ELEVATION

BILL OF MATERIAL

BENT 1

BAR	NO.	SIZE	TYPE	LENGTH	WEIGHT
✳B1	8	#10	1	35'-2"	1211
✳B2	6	#10	STR	32'-6"	839
✳B3	6	#5	STR	32'-6"	203
✳B4	8	#4	STR	12'-9"	68
✳M1	54	#11	4	60'-0"	17214
✳M2	54	#11	STR	23'-8"	6790
✳S1	36	#5	2	13'-0"	488
✳U1	32	#4	3	7'-2"	153
✳U2	8	#4	3	6'-10"	37
✳U3	8	#4	3	7'-0"	37
✳EPOXY COATED REINFORCING STEEL					27,040 LBS.
✳SP-1	3	▲	5	1661'-0"	5197
✳EPOXY COATED SPIRAL COLUMN REINFORCING STEEL					5,197 LBS.

CLASS AA CONCRETE (C.Y.)
POUR #2 - CAP = 26.3
TOTAL = 26.3

DRILLED PIER QUANTITIES:
DRILLED PIER CONCRETE (C.Y.)
POUR #1 - DRILLED PIERS = 92.2
4'-0"Ø DRILLED PIERS = 198.00 LIN. FT.
PERMANENT STEEL CASING FOR 4'-0"Ø DRILLED PIERS = 86.16 LIN. FT.
CSL TUBES = 822.00 LIN. FT.

BENT 2

BAR	NO.	SIZE	TYPE	LENGTH	WEIGHT
✳B1	8	#10	1	35'-2"	1211
✳B2	6	#10	STR	32'-6"	839
✳B3	6	#5	STR	32'-6"	203
✳B4	8	#4	STR	12'-9"	68
✳M1	54	#11	4	60'-0"	17214
✳M3	54	#11	STR	24'-5"	7005
✳S1	36	#5	2	13'-0"	488
✳U1	32	#4	3	7'-2"	153
✳U2	8	#4	3	6'-10"	37
✳U3	8	#4	3	7'-0"	37
✳EPOXY COATED REINFORCING STEEL					27,255 LBS.
✳SP-2	3	▲	5	1681'-8"	5262
✳EPOXY COATED SPIRAL COLUMN REINFORCING STEEL					5,262 LBS.

CLASS AA CONCRETE (C.Y.)
POUR #2 - CAP = 26.3
TOTAL = 26.3

DRILLED PIER QUANTITIES:
DRILLED PIER CONCRETE (C.Y.)
POUR #1 - DRILLED PIERS = 93.2
4'-0"Ø DRILLED PIERS = 200.25 LIN. FT.
PERMANENT STEEL CASING FOR 4'-0"Ø DRILLED PIERS = 88.74 LIN. FT.
CSL TUBES = 831.00 LIN. FT.

BENT 3

BAR	NO.	SIZE	TYPE	LENGTH	WEIGHT
✳B1	8	#10	1	35'-2"	1211
✳B2	6	#10	STR	32'-6"	839
✳B3	6	#5	STR	32'-6"	203
✳B4	8	#4	STR	12'-9"	68
✳M1	54	#11	4	60'-0"	17214
✳M4	54	#11	STR	25'-2"	7220
✳S1	36	#5	2	13'-0"	488
✳U1	32	#4	3	7'-2"	153
✳U2	8	#4	3	6'-10"	37
✳U3	8	#4	3	7'-0"	37
✳EPOXY COATED REINFORCING STEEL					27,470 LBS.
✳SP-3	3	▲	5	1702'-4"	5327
✳EPOXY COATED SPIRAL COLUMN REINFORCING STEEL					5,327 LBS.

CLASS AA CONCRETE (C.Y.)
POUR #2 - CAP = 26.3
TOTAL = 26.3

DRILLED PIER QUANTITIES:
DRILLED PIER CONCRETE (C.Y.)
POUR #1 - DRILLED PIERS = 94.2
4'-0"Ø DRILLED PIERS = 202.50 LIN. FT.
PERMANENT STEEL CASING FOR 4'-0"Ø DRILLED PIERS = 118.10 LIN. FT.
CSL TUBES = 840.00 LIN. FT.

▲ THE SP-1, SP-2, AND SP-3 SPIRAL REINFORCING STEEL SHALL BE W31 OR D-31 COLD DRAWN WIRE OR #5 PLAIN OR DEFORMED BAR.

BAR TYPES

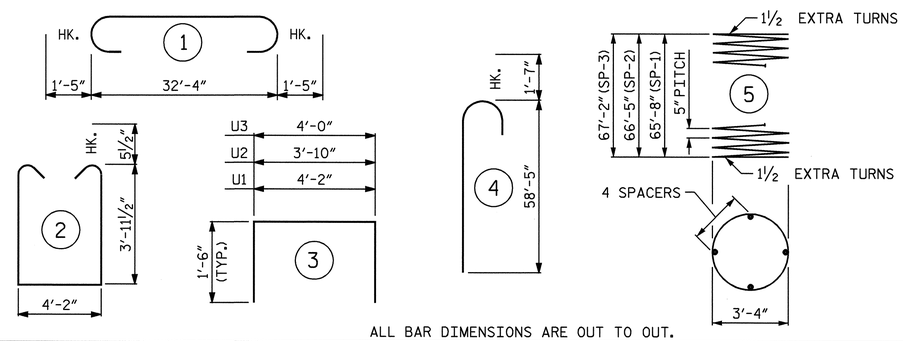

ALL BAR DIMENSIONS ARE OUT TO OUT.

PROJECT NO. B-2532
CRAVEN COUNTY
STATION: 31+21.29 -L-

SHEET 2 OF 2

STATE OF NORTH CAROLINA
DEPARTMENT OF TRANSPORTATION
RALEIGH

SUBSTRUCTURE

BENTS 1-3

NORTH CAROLINA PROFESSIONAL SEAL 21638 ENGINEER LAURA E. SUTTON
11/30/06

REVISIONS						SHEET NO.
NO.	BY:	DATE:	NO.	BY:	DATE:	S-94
1			3			TOTAL SHEETS
2			4			348

DRAWN BY : P.C. BREWER DATE : 7/20/06
CHECKED BY : B.L. GREEN DATE : 7/20/06

30-NOV-2006 11:34
r:\Structures\pbrewer\Microstation\B2532_sd_BT_01.dgn
lsutton

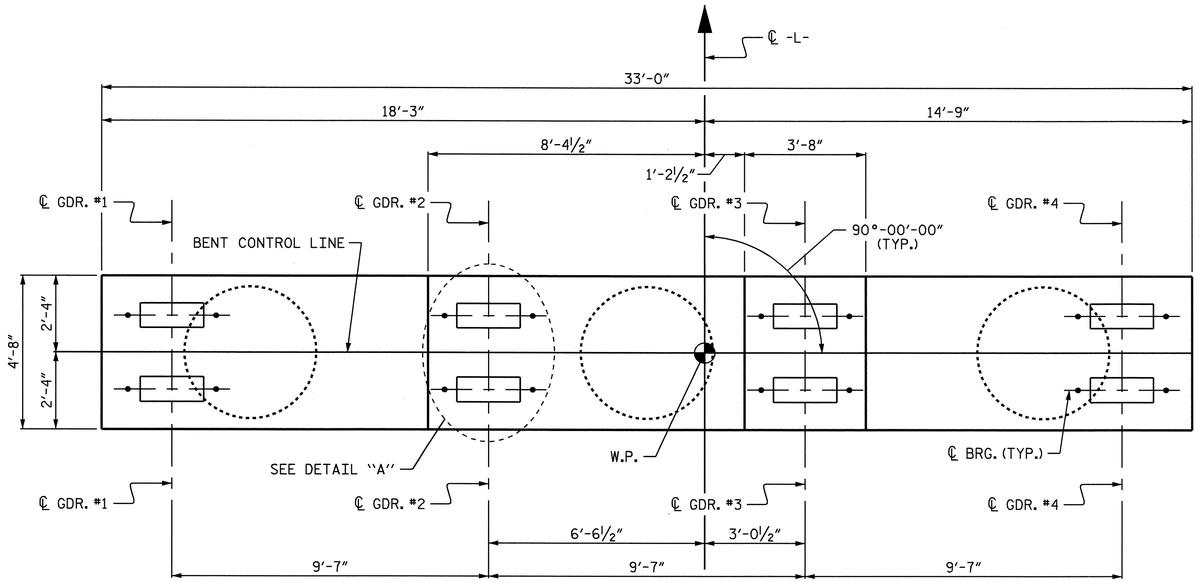

PLAN

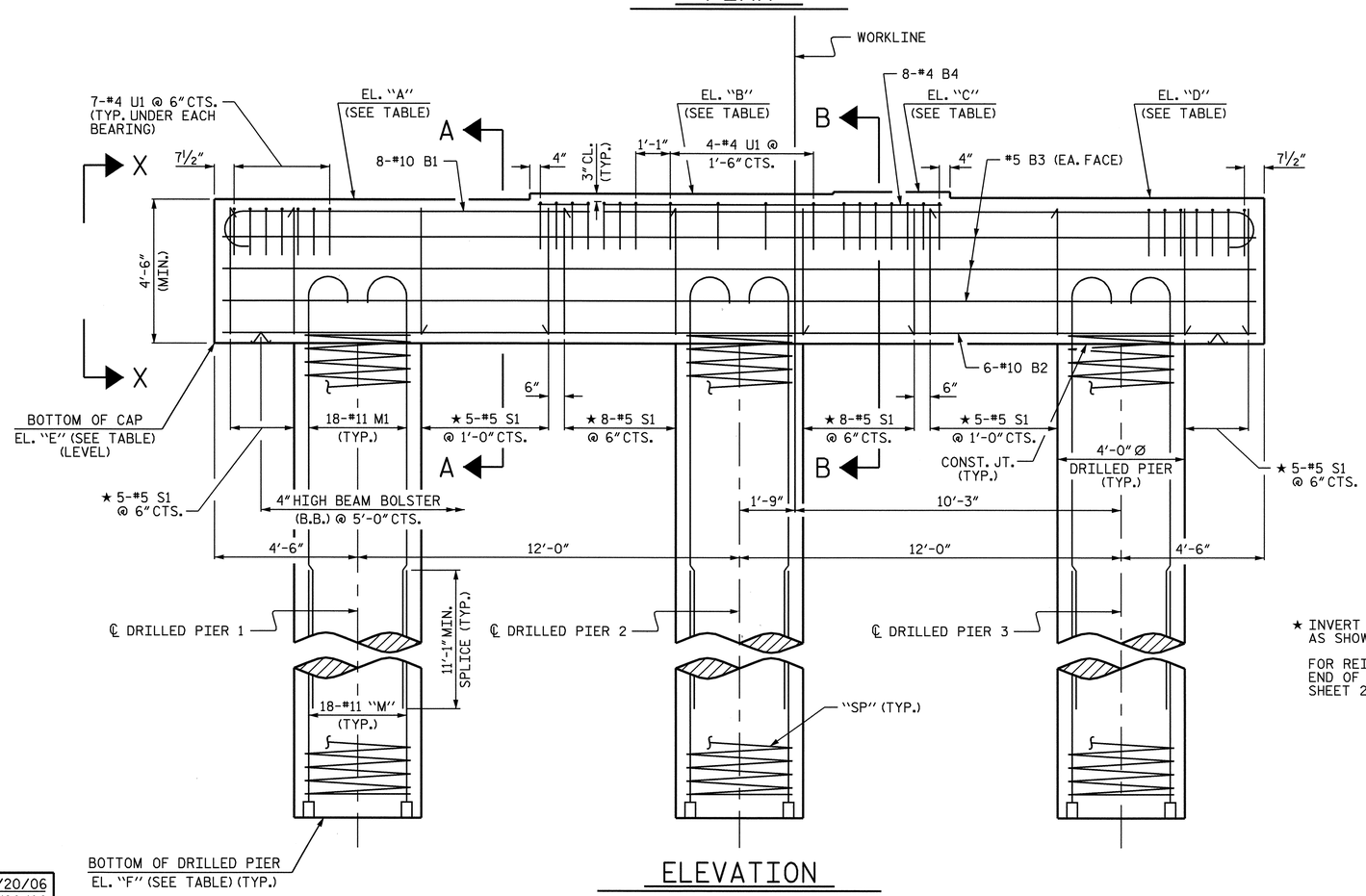

ELEVATION

★ INVERT ALTERNATE STIRRUPS AS SHOWN.

FOR REINFORCING STEEL IN END OF CAP, SEE VIEW X-X, SHEET 2 OF 2.

NOTES:

STIRRUPS AND U1 BARS IN CAP MAY BE SHIFTED AS NECESSARY TO CLEAR ANCHOR BOLTS.

HOOKS ON "M" BARS MAY BE TURNED AS NECESSARY FOR PLACING REINFORCING STEEL.

ALL STEEL IN THE DRILLED PIERS IS INCLUDED IN THE PAY ITEMS FOR "EPOXY COATED REINFORCING STEEL" AND "EPOXY COATED SPIRAL COLUMN REINFORCING STEEL".

THE CONTRACTOR'S ATTENTION IS CALLED TO THE FACT THAT THE LONGITUDINAL REINFORCEMENT FOR THE DRILLED PIERS IS DETAILED WITH 3 FEET OF EXTRA LENGTH.

FOR DRILLED PIERS, SEE SPECIAL PROVISIONS.

METALLIZE THE PERMANENT STEEL CASINGS FOR DRILLED PIERS FROM THE TOP OF THE DRILLED PIERS TO ELEVATION -3.000. NO FIELD SPLICING OF THE CASINGS IS ALLOWED IN THE METALLIZED ZONE. REPAIR DAMAGED COATINGS IN ACCORDANCE WITH THE THERMAL SPRAYED COATINGS (METALLIZATION) SPECIAL PROVISION FOR EXPOSED SURFACES.

THE TOP SURFACE AREAS OF THE CAP AT BENT 4 SHALL BE CURED IN ACCORDANCE WITH THE STANDARD SPECIFICATIONS EXCEPT THE MEMBRANE CURING COMPOUND METHOD SHALL NOT BE USED.

ELEVATION TABLE

	EL. "A"	EL. "B"	EL. "C"	EL. "D"	EL. "E"	EL. "F"
BENT 4	10.578	10.770	10.840	10.648	6.078	-62.172
BENT 5	11.213	11.405	11.475	11.283	6.713	-62.287
BENT 6	11.806	11.998	12.068	11.876	7.306	-62.194

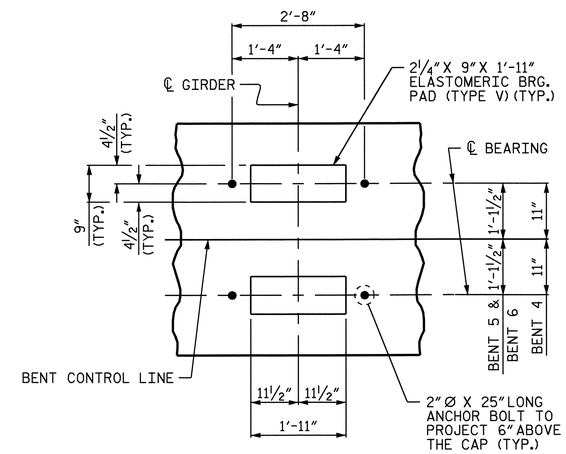

DETAIL "A"

(TYP. EA. GIRDER)

PROJECT NO. B-2532

CRAVEN COUNTY

STATION: 31+21.29 -L-

SHEET 1 OF 2

STATE OF NORTH CAROLINA
DEPARTMENT OF TRANSPORTATION
RALEIGH

SUBSTRUCTURE

BENTS 4-6

NORTH CAROLINA PROFESSIONAL SEAL 21638 ENGINEER LAURA E. SUTTON
11/30/06

REVISIONS						SHEET NO.
NO.	BY:	DATE:	NO.	BY:	DATE:	S-95
1			3			TOTAL SHEETS
2			4			348

DRAWN BY : P.C. BREWER DATE : 7/20/06
CHECKED BY : B.L. GREEN DATE : 7/26/06

24-OCT-2006 14:40
r:\Structures\pbrewer\Microstation\B2532_sd_BT_01.dgn
LSUTTON

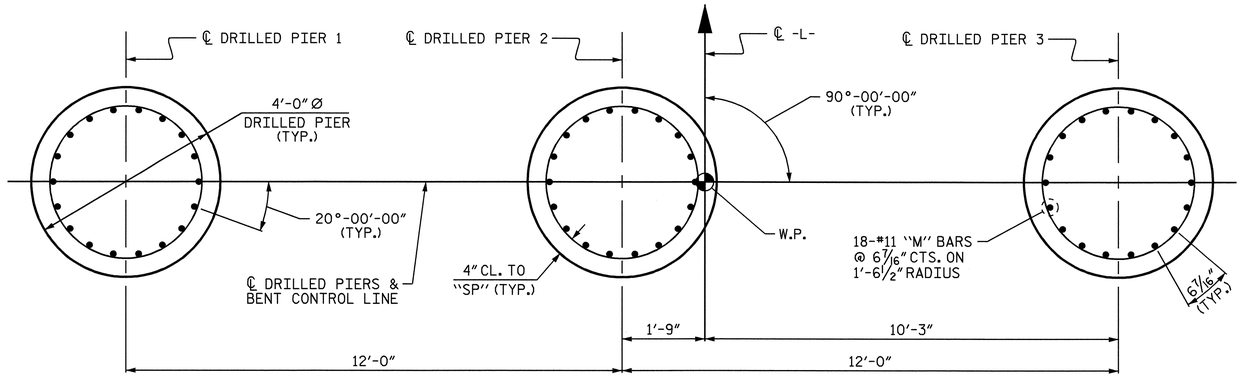

PLAN OF DRILLED PIERS

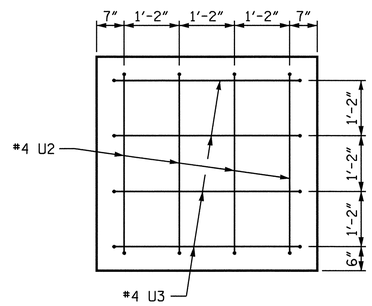

VIEW X-X

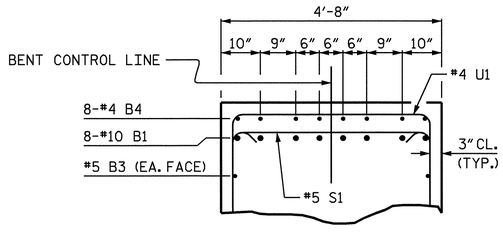

SECTION B-B

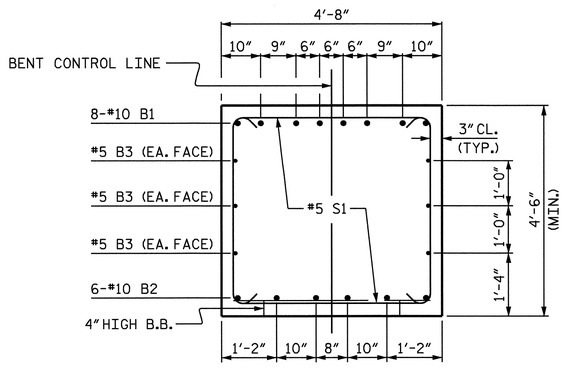

SECTION A-A

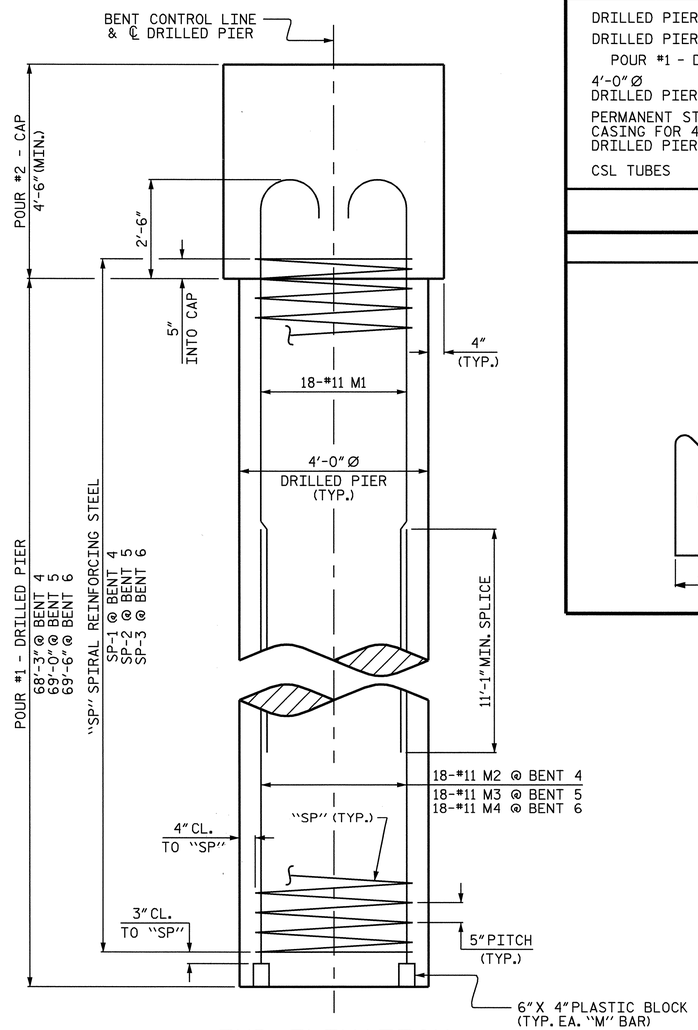

END ELEVATION

BILL OF MATERIAL

BENT 4

BAR	NO.	SIZE	TYPE	LENGTH	WEIGHT
✳B1	8	#10	1	35'-2"	1211
✳B2	6	#10	STR	32'-6"	839
✳B3	6	#5	STR	32'-6"	203
✳B4	8	#4	STR	12'-9"	68
✳M1	54	#11	4	60'-0"	17214
✳M2	54	#11	STR	25'-11"	7436
✳S1	36	#5	2	13'-0"	488
✳U1	32	#4	3	7'-2"	153
✳U2	8	#4	3	6'-10"	37
✳U3	8	#4	3	7'-0"	37

✳EPOXY COATED REINFORCING STEEL 27,686 LBS.

✳SP-1 3 ▲ 5 1712'-7" 5359

✳EPOXY COATED SPIRAL COLUMN REINFORCING STEEL 5,359 LBS.

CLASS AA CONCRETE (C.Y.)
POUR #2 - CAP = 26.3
TOTAL = 26.3

DRILLED PIER QUANTITIES:
DRILLED PIER CONCRETE (C.Y.)
POUR #1 - DRILLED PIERS = 95.3
4'-0"Ø DRILLED PIERS = 204.75 LIN. FT.
PERMANENT STEEL CASING FOR 4'-0"Ø DRILLED PIERS = 120.23 LIN. FT.
CSL TUBES = 849.00 LIN. FT.

BENT 5

BAR	NO.	SIZE	TYPE	LENGTH	WEIGHT
✳B1	8	#10	1	35'-2"	1211
✳B2	6	#10	STR	32'-6"	839
✳B3	6	#5	STR	32'-6"	203
✳B4	8	#4	STR	12'-9"	68
✳M1	54	#11	4	60'-0"	17214
✳M3	54	#11	STR	26'-8"	7651
✳S1	36	#5	2	13'-0"	488
✳U1	32	#4	3	7'-2"	153
✳U2	8	#4	3	6'-10"	37
✳U3	8	#4	3	7'-0"	37

✳EPOXY COATED REINFORCING STEEL 27,901 LBS.

✳SP-2 3 ▲ 5 1733'-3" 5423

✳EPOXY COATED SPIRAL COLUMN REINFORCING STEEL 5,423 LBS.

CLASS AA CONCRETE (C.Y.)
POUR #2 - CAP = 26.3
TOTAL = 26.3

DRILLED PIER QUANTITIES:
DRILLED PIER CONCRETE (C.Y.)
POUR #1 - DRILLED PIERS = 96.3
4'-0"Ø DRILLED PIERS = 207.00 LIN. FT.
PERMANENT STEEL CASING FOR 4'-0"Ø DRILLED PIERS = 122.14 LIN. FT.
CSL TUBES = 858.00 LIN. FT.

BENT 6

BAR	NO.	SIZE	TYPE	LENGTH	WEIGHT
✳B1	8	#10	1	35'-2"	1211
✳B2	6	#10	STR	32'-6"	839
✳B3	6	#5	STR	32'-6"	203
✳B4	8	#4	STR	12'-9"	68
✳M1	54	#11	4	60'-0"	17214
✳M4	54	#11	STR	27'-2"	7794
✳S1	36	#5	2	13'-0"	488
✳U1	32	#4	3	7'-2"	153
✳U2	8	#4	3	6'-10"	37
✳U3	8	#4	3	7'-0"	37

✳EPOXY COATED REINFORCING STEEL 28,044 LBS.

✳SP-3 3 ▲ 5 1743'-7" 5456

✳EPOXY COATED SPIRAL COLUMN REINFORCING STEEL 5,456 LBS.

CLASS AA CONCRETE (C.Y.)
POUR #2 - CAP = 26.3
TOTAL = 26.3

DRILLED PIER QUANTITIES:
DRILLED PIER CONCRETE (C.Y.)
POUR #1 - DRILLED PIERS = 97.0
4'-0"Ø DRILLED PIERS = 208.50 LIN. FT.
PERMANENT STEEL CASING FOR 4'-0"Ø DRILLED PIERS = 123.92 LIN. FT.
CSL TUBES = 864.00 LIN. FT.

▲ THE SP-1, SP-2, AND SP-3 SPIRAL REINFORCING STEEL SHALL BE W31 OR D-31 COLD DRAWN WIRE OR #5 PLAIN OR DEFORMED BAR.

BAR TYPES

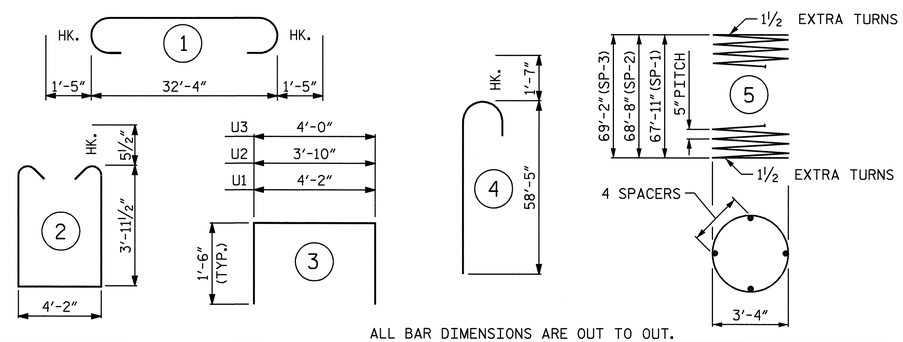

ALL BAR DIMENSIONS ARE OUT TO OUT.

PROJECT NO. B-2532
CRAVEN COUNTY
STATION: 31+21.29 -L-

SHEET 2 OF 2

STATE OF NORTH CAROLINA
DEPARTMENT OF TRANSPORTATION
RALEIGH

SUBSTRUCTURE

BENTS 4-6

NORTH CAROLINA PROFESSIONAL SEAL 21638 ENGINEER LAURA E. SUTTON
11/30/06

REVISIONS						SHEET NO.
NO.	BY:	DATE:	NO.	BY:	DATE:	S-96
1			3			TOTAL SHEETS
2			4			348

DRAWN BY : P.C. BREWER DATE : 7/20/06
CHECKED BY : B.L. GREEN DATE : 7/26/06

30-NOV-2006 11:34
r:\Structures\pbrewer\Microstation\B2532_sd_BT_01.dgn
lsutton

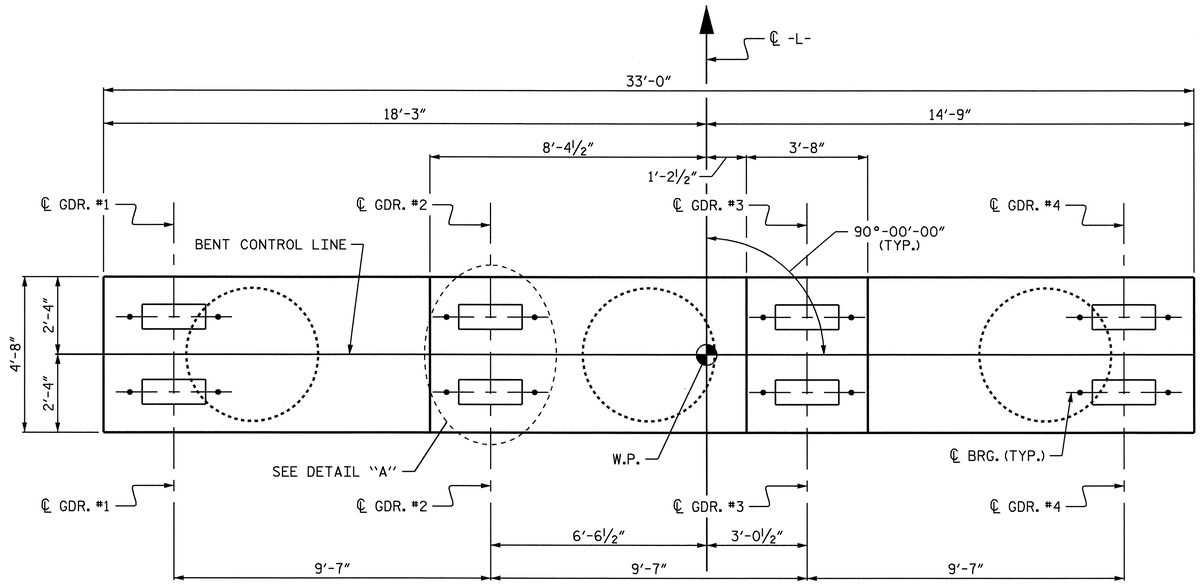

PLAN

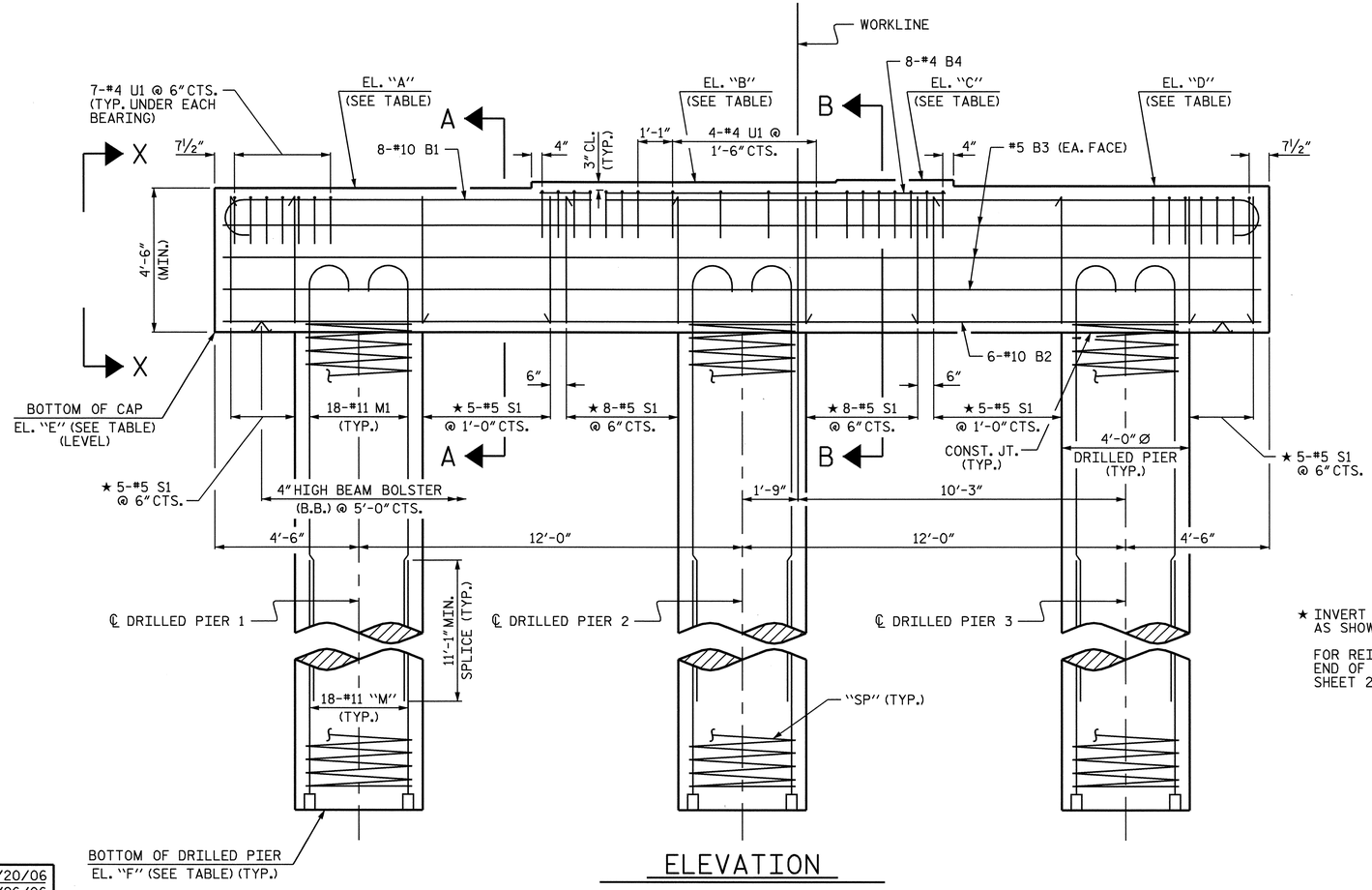

ELEVATION

★ INVERT ALTERNATE STIRRUPS AS SHOWN.

FOR REINFORCING STEEL IN END OF CAP, SEE VIEW X-X, SHEET 2 OF 2.

NOTES:

STIRRUPS AND U1 BARS IN CAP MAY BE SHIFTED AS NECESSARY TO CLEAR ANCHOR BOLTS.

HOOKS ON "M" BARS MAY BE TURNED AS NECESSARY FOR PLACING REINFORCING STEEL.

ALL STEEL IN THE DRILLED PIERS IS INCLUDED IN THE PAY ITEMS FOR "EPOXY COATED REINFORCING STEEL" AND "EPOXY COATED SPIRAL COLUMN REINFORCING STEEL".

THE CONTRACTOR'S ATTENTION IS CALLED TO THE FACT THAT THE LONGITUDINAL REINFORCEMENT FOR THE DRILLED PIERS IS DETAILED WITH 3 FEET OF EXTRA LENGTH.

FOR DRILLED PIERS, SEE SPECIAL PROVISIONS.

METALLIZE THE PERMANENT STEEL CASINGS FOR DRILLED PIERS FROM THE TOP OF THE DRILLED PIERS TO ELEVATION -3.000. NO FIELD SPLICING OF THE CASINGS IS ALLOWED IN THE METALLIZED ZONE. REPAIR DAMAGED COATINGS IN ACCORDANCE WITH THE THERMAL SPRAYED COATINGS (METALLIZATION) SPECIAL PROVISION FOR EXPOSED SURFACES.

THE TOP SURFACE AREAS OF THE CAP AT BENT 8 SHALL BE CURED IN ACCORDANCE WITH THE STANDARD SPECIFICATIONS EXCEPT THE MEMBRANE CURING COMPOUND METHOD SHALL NOT BE USED.

ELEVATION TABLE

	EL. "A"	EL. "B"	EL. "C"	EL. "D"	EL. "E"	EL. "F"
BENT 7	12.399	12.590	12.660	12.469	7.899	-65.101
BENT 8	12.991	13.183	13.253	13.061	8.491	-68.259
BENT 9	13.581	13.772	13.842	13.651	9.081	-68.169

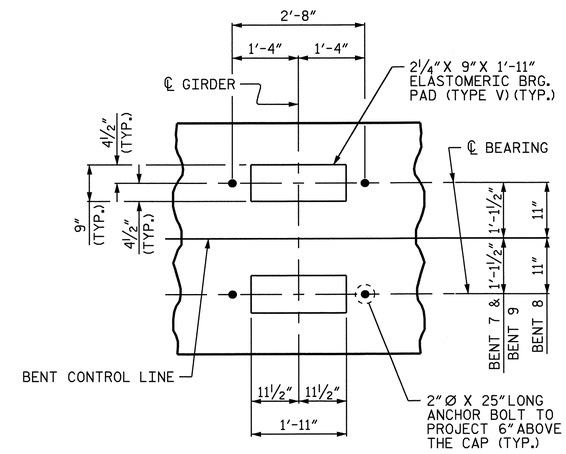

DETAIL "A"

(TYP. EA. GIRDER)

PROJECT NO. B-2532

CRAVEN COUNTY

STATION: 31+21.29 -L-

SHEET 1 OF 2

STATE OF NORTH CAROLINA
DEPARTMENT OF TRANSPORTATION
RALEIGH

SUBSTRUCTURE

BENTS 7-9

NORTH CAROLINA PROFESSIONAL SEAL 21638 ENGINEER LAURA E. SUTTON
11/30/06

REVISIONS								SHEET NO.
NO.	BY:	DATE:	NO.	BY:	DATE:			S-97
1			3					TOTAL SHEETS
2			4					348

DRAWN BY : P.C. BREWER DATE : 7/20/06
CHECKED BY : B.L. GREEN DATE : 7/26/06

24-OCT-2006 14:40
r:\Structures\pbrewer\Microstation\B2532_sd_BT_01.dgn
LSUTTON

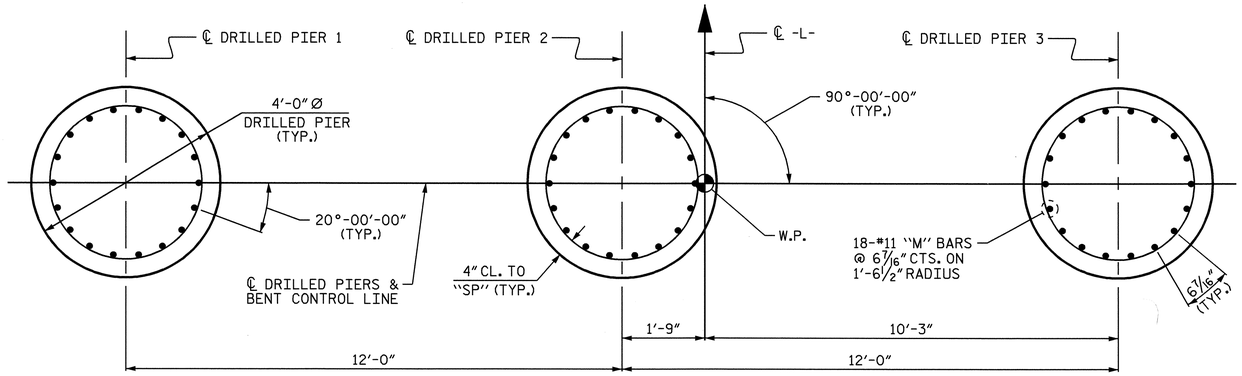

PLAN OF DRILLED PIERS

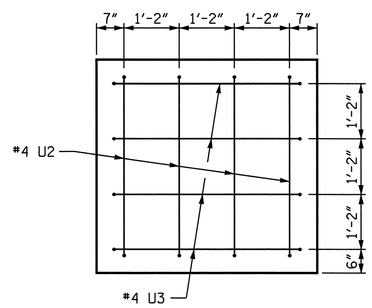

VIEW X-X

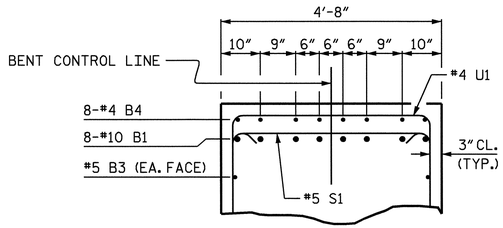

SECTION B-B

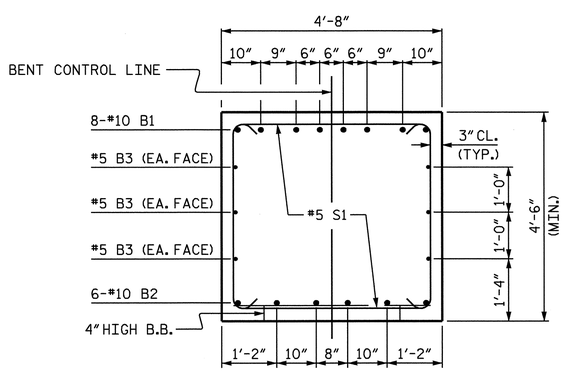

SECTION A-A

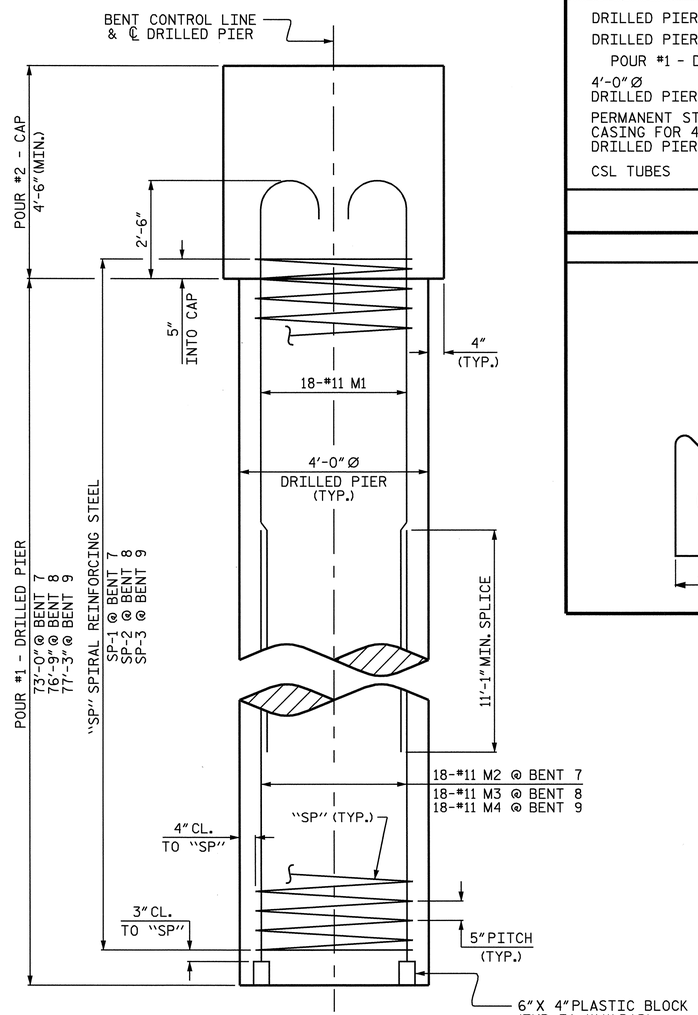

END ELEVATION

BILL OF MATERIAL

BENT 7

BAR	NO.	SIZE	TYPE	LENGTH	WEIGHT
✳B1	8	#10	1	35'-2"	1211
✳B2	6	#10	STR	32'-6"	839
✳B3	6	#5	STR	32'-6"	203
✳B4	8	#4	STR	12'-9"	68
✳M1	54	#11	4	60'-0"	17214
✳M2	54	#11	STR	30'-8"	8798
✳S1	36	#5	2	13'-0"	488
✳U1	32	#4	3	7'-2"	153
✳U2	8	#4	3	6'-10"	37
✳U3	8	#4	3	7'-0"	37
✳EPOXY COATED REINFORCING STEEL					29,048 LBS.
✳SP-1	3	▲	5	1836'-5"	5746
✳EPOXY COATED SPIRAL COLUMN REINFORCING STEEL					5,746 LBS.

CLASS AA CONCRETE (C.Y.)
POUR #2 - CAP = 26.3
TOTAL = 26.3

DRILLED PIER QUANTITIES:
DRILLED PIER CONCRETE (C.Y.)
POUR #1 - DRILLED PIERS = 101.9
4'-0"Ø DRILLED PIERS = 219.00 LIN. FT.
PERMANENT STEEL CASING FOR 4'-0"Ø DRILLED PIERS = 137.70 LIN. FT.
CSL TUBES = 906.00 LIN. FT.

BENT 8

BAR	NO.	SIZE	TYPE	LENGTH	WEIGHT
✳B1	8	#10	1	35'-2"	1211
✳B2	6	#10	STR	32'-6"	839
✳B3	6	#5	STR	32'-6"	203
✳B4	8	#4	STR	12'-9"	68
✳M1	54	#11	4	60'-0"	17214
✳M3	54	#11	STR	34'-5"	9874
✳S1	36	#5	2	13'-0"	488
✳U1	32	#4	3	7'-2"	153
✳U2	8	#4	3	6'-10"	37
✳U3	8	#4	3	7'-0"	37
✳EPOXY COATED REINFORCING STEEL					30,124 LBS.
✳SP-2	3	▲	5	1929'-3"	6037
✳EPOXY COATED SPIRAL COLUMN REINFORCING STEEL					6,037 LBS.

CLASS AA CONCRETE (C.Y.)
POUR #2 - CAP = 26.3
TOTAL = 26.3

DRILLED PIER QUANTITIES:
DRILLED PIER CONCRETE (C.Y.)
POUR #1 - DRILLED PIERS = 107.2
4'-0"Ø DRILLED PIERS = 230.25 LIN. FT.
PERMANENT STEEL CASING FOR 4'-0"Ø DRILLED PIERS = 139.47 LIN. FT.
CSL TUBES = 951.00 LIN. FT.

BENT 9

BAR	NO.	SIZE	TYPE	LENGTH	WEIGHT
✳B1	8	#10	1	35'-2"	1211
✳B2	6	#10	STR	32'-6"	839
✳B3	6	#5	STR	32'-6"	203
✳B4	8	#4	STR	12'-9"	68
✳M1	54	#11	4	60'-0"	17214
✳M4	54	#11	STR	34'-11"	10018
✳S1	36	#5	2	13'-0"	488
✳U1	32	#4	3	7'-2"	153
✳U2	8	#4	3	6'-10"	37
✳U3	8	#4	3	7'-0"	37
✳EPOXY COATED REINFORCING STEEL					30,268 LBS.
✳SP-3	3	▲	5	1939'-7"	6069
✳EPOXY COATED SPIRAL COLUMN REINFORCING STEEL					6,069 LBS.

CLASS AA CONCRETE (C.Y.)
POUR #2 - CAP = 26.3
TOTAL = 26.3

DRILLED PIER QUANTITIES:
DRILLED PIER CONCRETE (C.Y.)
POUR #1 - DRILLED PIERS = 107.9
4'-0"Ø DRILLED PIERS = 231.75 LIN. FT.
PERMANENT STEEL CASING FOR 4'-0"Ø DRILLED PIERS = 141.24 LIN. FT.
CSL TUBES = 957.00 LIN. FT.

▲ THE SP-1, SP-2, AND SP-3 SPIRAL REINFORCING STEEL SHALL BE W31 OR D-31 COLD DRAWN WIRE OR #5 PLAIN OR DEFORMED BAR.

BAR TYPES

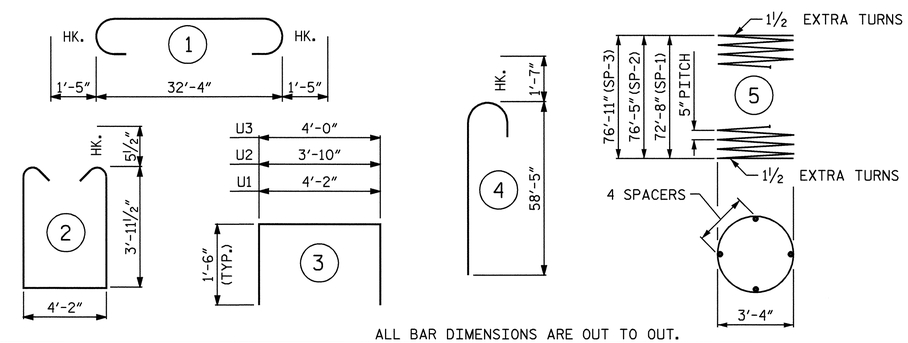

ALL BAR DIMENSIONS ARE OUT TO OUT.

PROJECT NO. B-2532
CRAVEN COUNTY
STATION: 31+21.29 -L-

SHEET 2 OF 2

STATE OF NORTH CAROLINA
DEPARTMENT OF TRANSPORTATION
RALEIGH

SUBSTRUCTURE

BENTS 7-9

NORTH CAROLINA PROFESSIONAL SEAL 21638 ENGINEER LAURA E. SUTTON
11/30/06

REVISIONS						SHEET NO.
NO.	BY:	DATE:	NO.	BY:	DATE:	S-98
1			3			TOTAL SHEETS
2			4			348

DRAWN BY : P.C. BREWER DATE : 7/20/06
CHECKED BY : B.L. GREEN DATE : 7/26/06

30-NOV-2006 11:34
r:\Structures\pbrewer\Microstation\B2532_sd_BT_01.dgn
lsutton

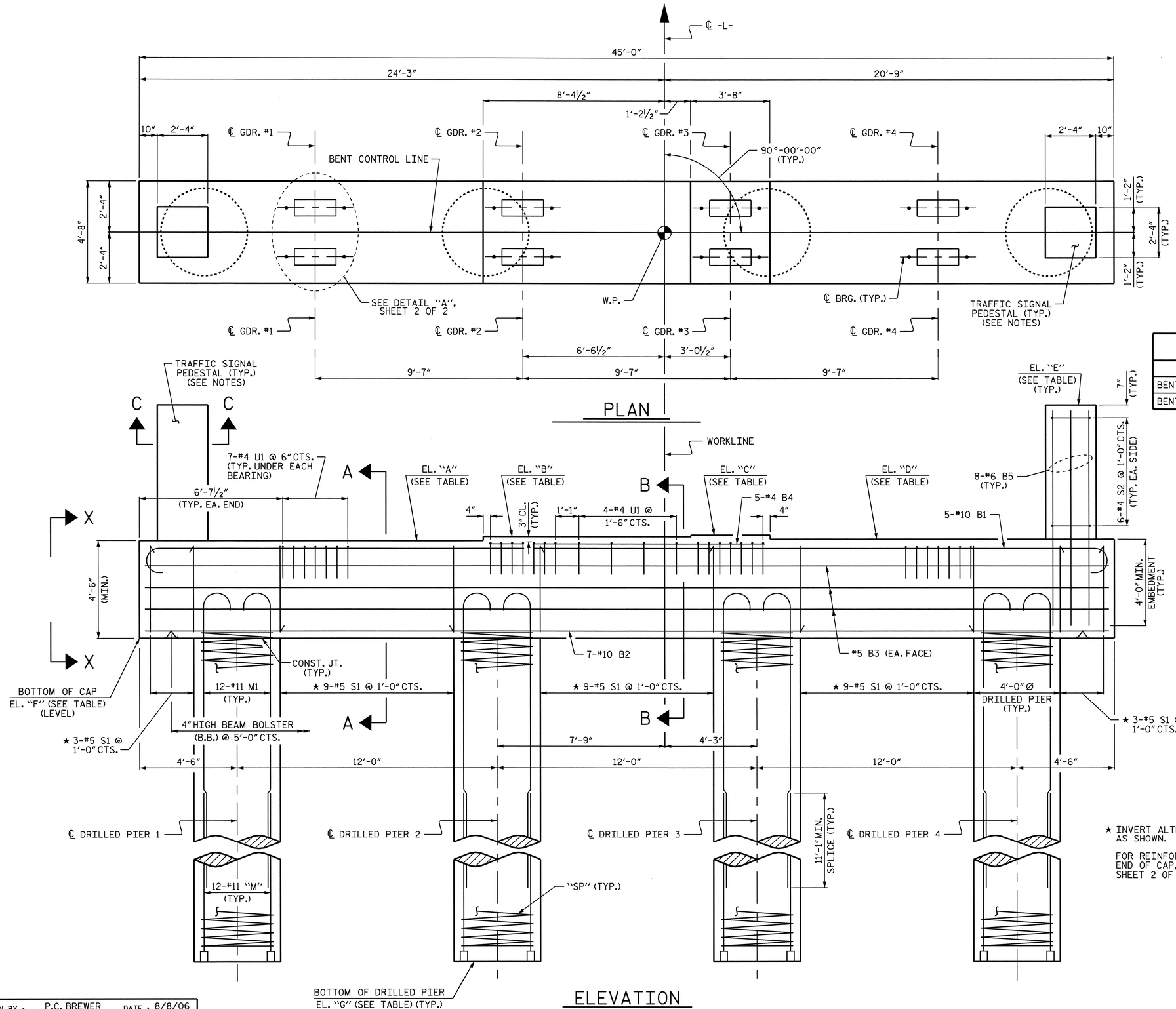

NOTES:

STIRRUPS AND U1 BARS IN CAP MAY BE SHIFTED AS NECESSARY TO CLEAR ANCHOR BOLTS.

HOOKS ON "M" BARS MAY BE TURNED AS NECESSARY FOR PLACING REINFORCING STEEL.

ALL STEEL IN THE DRILLED PIERS IS INCLUDED IN THE PAY ITEMS FOR "EPOXY COATED REINFORCING STEEL" AND "EPOXY COATED SPIRAL COLUMN REINFORCING STEEL".

THE CONTRACTOR'S ATTENTION IS CALLED TO THE FACT THAT THE LONGITUDINAL REINFORCEMENT FOR THE DRILLED PIERS IS DETAILED WITH 3 FEET OF EXTRA LENGTH.

FOR DRILLED PIERS, SEE SPECIAL PROVISIONS.

METALLIZE THE PERMANENT STEEL CASINGS FOR DRILLED PIERS FROM THE TOP OF THE DRILLED PIERS TO ELEVATION -3.000. NO FIELD SPLICING OF THE CASINGS IS ALLOWED IN THE METALLIZED ZONE. REPAIR DAMAGED COATINGS IN ACCORDANCE WITH THE THERMAL SPRAYED COATINGS (METALLIZATION) SPECIAL PROVISION FOR EXPOSED SURFACES.

SEE VOLUME 3 - ELECTRICAL DRAWINGS FOR TRAFFIC SIGNAL DETAILS, INCLUDING SIGNAL POLE, ANCHOR BOLT PATTERNS, MOUNTING HARDWARE, AND CONDUIT LOCATION AND INSTALLATION.

ELEVATION TABLE

	EL. "A"	EL. "B"	EL. "C"	EL. "D"	EL. "E"	EL. "F"	EL. "G"
BENT 10 (W.P. #11)	14.173	14.365	14.435	14.243	20.436	9.673	-68.327
BENT 17 (W.P. #18)	12.222	12.413	12.483	12.292	18.491	7.722	-60.278

★ INVERT ALTERNATE STIRRUPS AS SHOWN.

FOR REINFORCING STEEL IN END OF CAP, SEE VIEW X-X, SHEET 2 OF 2.

PROJECT NO. B-2532
CRAVEN COUNTY
STATION: 31+21.29 -L-

SHEET 1 OF 2

STATE OF NORTH CAROLINA
DEPARTMENT OF TRANSPORTATION
RALEIGH

SUBSTRUCTURE

BENTS 10 & 17

NORTH CAROLINA PROFESSIONAL SEAL 21638 ENGINEER LAURA E. SUTTON
11/30/06

REVISIONS						SHEET NO.
NO.	BY:	DATE:	NO.	BY:	DATE:	S-99
1			3			TOTAL SHEETS
2			4			348

DRAWN BY : P.C. BREWER DATE : 8/8/06
CHECKED BY : B.L. GREEN DATE : 9/14/06

30-NOV-2006 11:34
r:\Structures\pbrewer\Microstation\B2532_sd_BT_01.dgn
lsutton

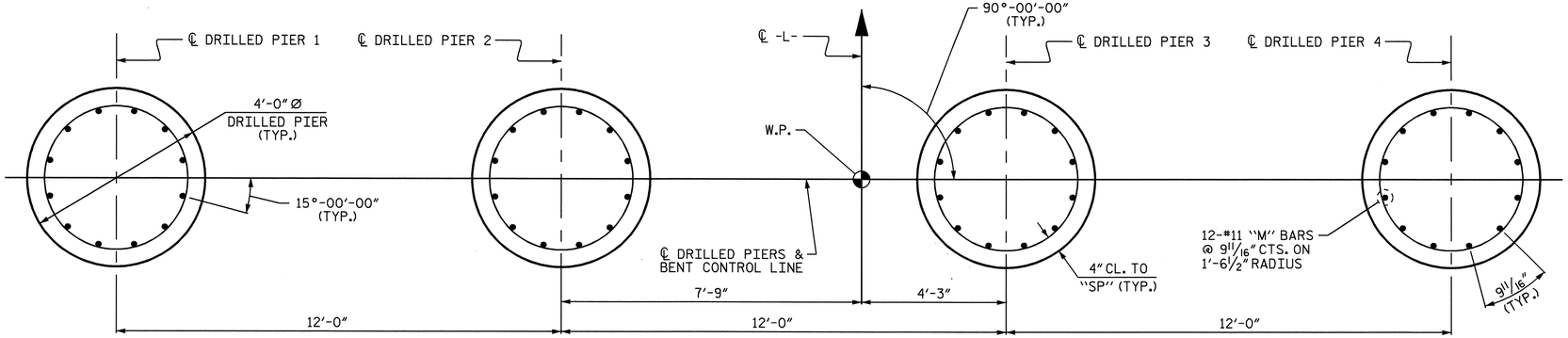

PLAN OF DRILLED PIERS

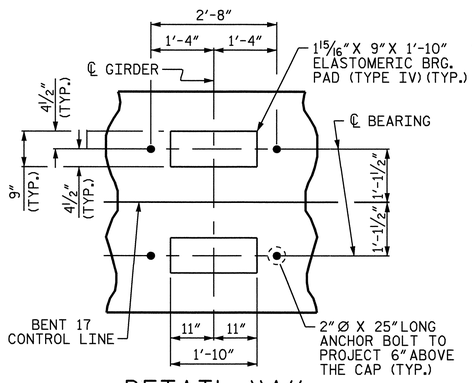

DETAIL "A"

(TYP. EA. GIRDER AT BENT 17)

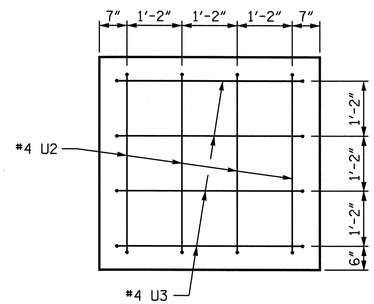

VIEW X-X

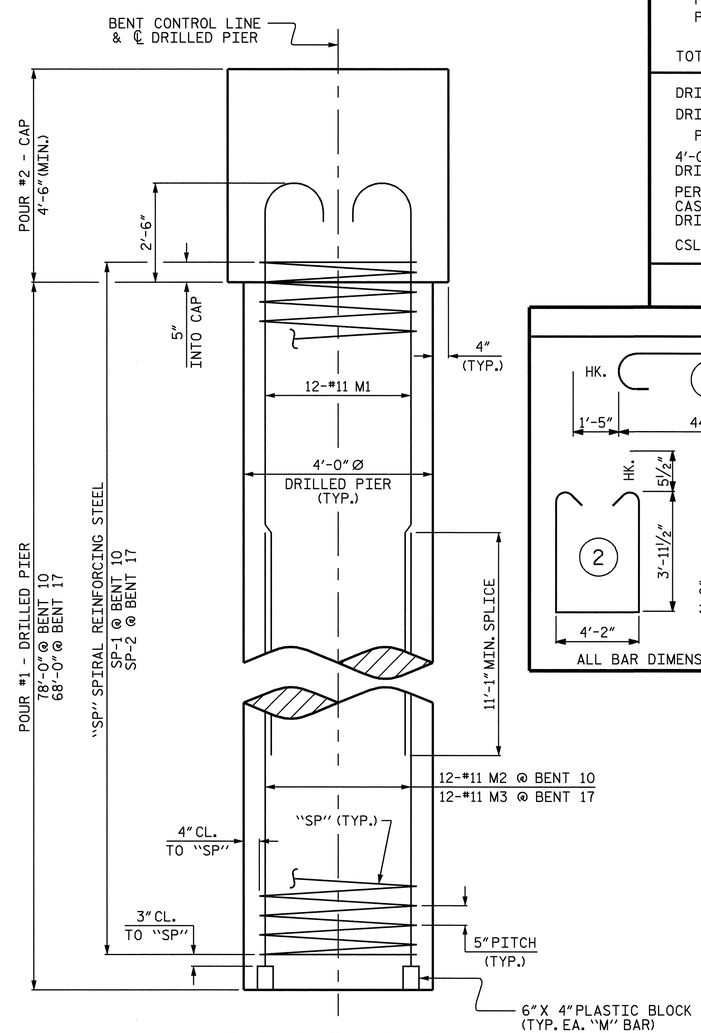

END ELEVATION

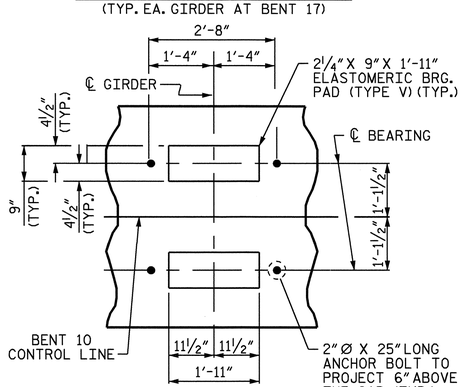

DETAIL "A"

(TYP. EA. GIRDER AT BENT 10)

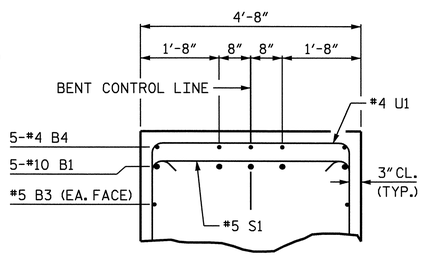

SECTION B-B

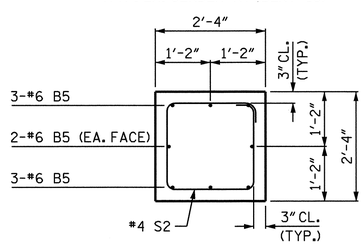

SECTION C-C

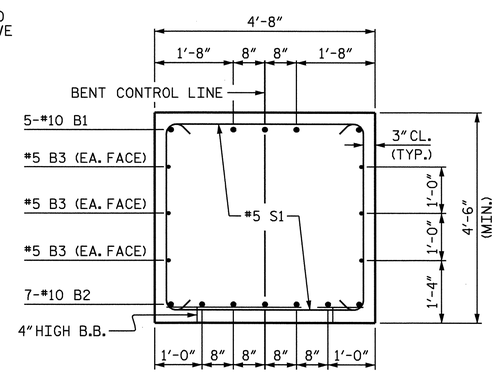

SECTION A-A

BILL OF MATERIAL

BENT 10

BAR	NO.	SIZE	TYPE	LENGTH	WEIGHT
✱B1	5	#10	1	47'-2"	1015
✱B2	7	#10	STR	44'-6"	1340
✱B3	6	#5	STR	44'-6"	278
✱B4	5	#4	STR	12'-9"	43
✱B5	16	#6	STR	10'-0"	240
✱M1	48	#11	4	60'-0"	15301
✱M2	48	#11	STR	35'-8"	9096
✱S1	33	#5	2	13'-0"	447
✱S2	12	#4	5	8'-1"	65
✱U1	32	#4	3	7'-2"	153
✱U2	8	#4	3	6'-10"	37
✱U3	8	#4	3	7'-0"	37
✱EPOXY COATED REINFORCING STEEL					28,052 LBS.
✱SP-1	4	▲	6	1960'-3"	8178
✱EPOXY COATED SPIRAL COLUMN REINFORCING STEEL					8,178 LBS.

CLASS AA CONCRETE (C.Y.)
POUR #2 - CAP = 35.7
POUR #3 - TRAFFIC SIGNAL PEDESTAL = 2.5
TOTAL = 38.2

DRILLED PIER QUANTITIES:
DRILLED PIER CONCRETE (C.Y.)
POUR #1 - DRILLED PIERS = 145.2
4'-0" Ø DRILLED PIERS = 312.00 LIN. FT.
PERMANENT STEEL CASING FOR 4'-0" Ø DRILLED PIERS = 214.69 LIN. FT.
CSL TUBES = 1288.00 LIN. FT.

BENT 17

BAR	NO.	SIZE	TYPE	LENGTH	WEIGHT
✱B1	5	#10	1	47'-2"	1015
✱B2	7	#10	STR	44'-6"	1340
✱B3	6	#5	STR	44'-6"	278
✱B4	5	#4	STR	12'-9"	43
✱B5	16	#6	STR	10'-0"	240
✱M1	48	#11	4	60'-0"	15301
✱M3	48	#11	STR	25'-8"	6546
✱S1	33	#5	2	13'-0"	447
✱S2	12	#4	5	8'-1"	65
✱U1	32	#4	3	7'-2"	153
✱U2	8	#4	3	6'-10"	37
✱U3	8	#4	3	7'-0"	37
✱EPOXY COATED REINFORCING STEEL					25,502 LBS.
✱SP-2	4	▲	6	1712'-7"	7145
✱EPOXY COATED SPIRAL COLUMN REINFORCING STEEL					7,145 LBS.

CLASS AA CONCRETE (C.Y.)
POUR #2 - CAP = 35.7
POUR #3 - TRAFFIC SIGNAL PEDESTAL = 2.5
TOTAL = 38.2

DRILLED PIER QUANTITIES:
DRILLED PIER CONCRETE (C.Y.)
POUR #1 - DRILLED PIERS = 126.6
4'-0" Ø DRILLED PIERS = 272.00 LIN. FT.
PERMANENT STEEL CASING FOR 4'-0" Ø DRILLED PIERS = 150.89 LIN. FT.
CSL TUBES = 1128.00 LIN. FT.

▲ THE SP-1 AND SP-2 SPIRAL REINFORCING STEEL SHALL BE W31 OR D-31 COLD DRAWN WIRE OR #5 PLAIN OR DEFORMED BAR.

BAR TYPES

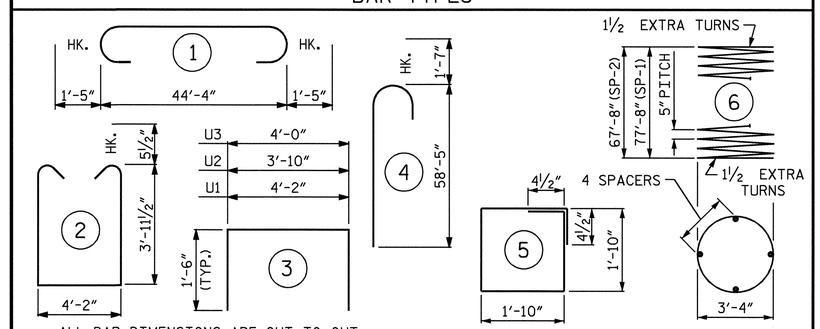

ALL BAR DIMENSIONS ARE OUT TO OUT.

PROJECT NO. B-2532
CRAVEN COUNTY
STATION: 31+21.29 -L-

SHEET 2 OF 2

STATE OF NORTH CAROLINA
DEPARTMENT OF TRANSPORTATION
RALEIGH

SUBSTRUCTURE

BENTS 10 & 17

NORTH CAROLINA PROFESSIONAL SEAL 21638 ENGINEER LAURA E. SUTTON
11/30/06

REVISIONS						SHEET NO.
NO.	BY:	DATE:	NO.	BY:	DATE:	S-100
1			3			TOTAL SHEETS
2			4			348

DRAWN BY : P.C. BREWER DATE : 8/8/06
CHECKED BY : B.L. GREEN DATE : 9/14/06

30-NOV-2006 11:34
r:\Structures\pbrewer\Microstation\B2532_sd_BT_01.dgn
lsutton

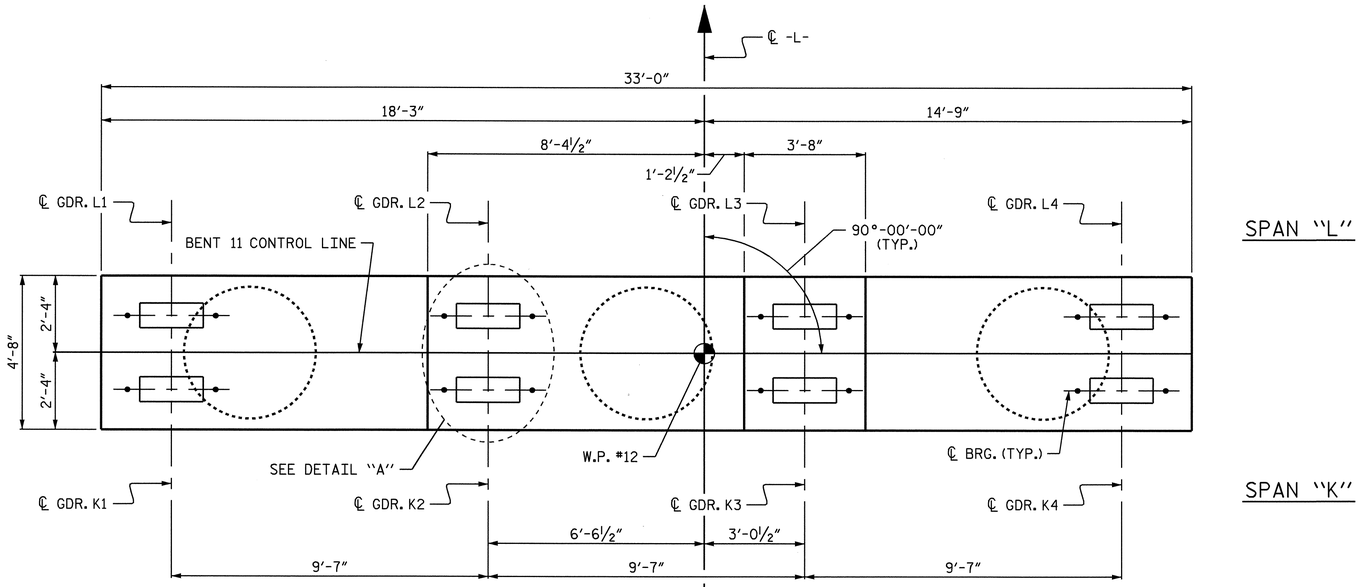

PLAN

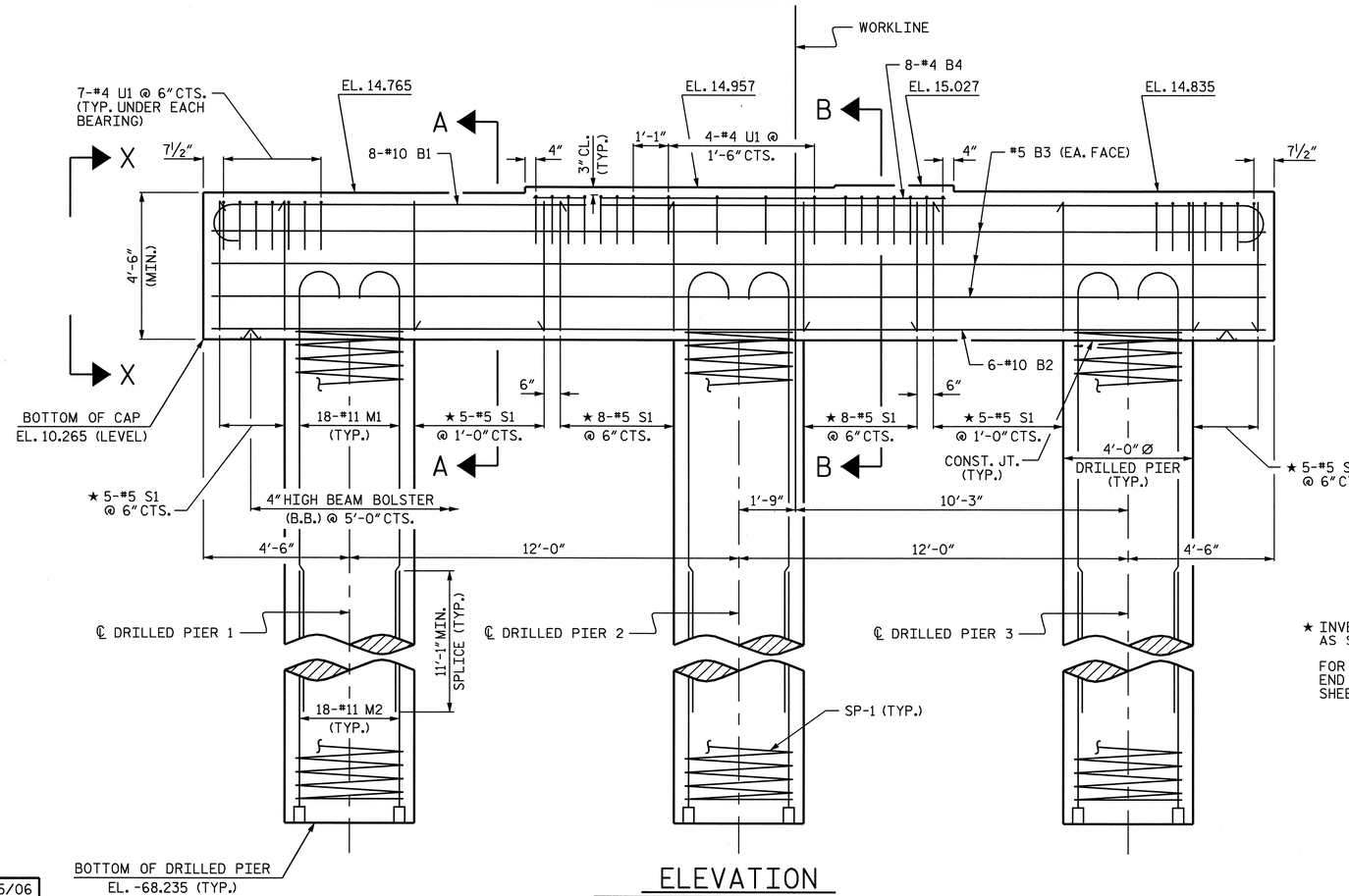

ELEVATION

★ INVERT ALTERNATE STIRRUPS AS SHOWN.

FOR REINFORCING STEEL IN END OF CAP, SEE VIEW X-X, SHEET 2 OF 2.

NOTES:

STIRRUPS AND U1 BARS IN CAP MAY BE SHIFTED AS NECESSARY TO CLEAR ANCHOR BOLTS.

HOOKS ON "M" BARS MAY BE TURNED AS NECESSARY FOR PLACING REINFORCING STEEL.

ALL STEEL IN THE DRILLED PIERS IS INCLUDED IN THE PAY ITEMS FOR "EPOXY COATED REINFORCING STEEL" AND "EPOXY COATED SPIRAL COLUMN REINFORCING STEEL".

THE CONTRACTOR'S ATTENTION IS CALLED TO THE FACT THAT THE LONGITUDINAL REINFORCEMENT FOR THE DRILLED PIERS IS DETAILED WITH 3 FEET OF EXTRA LENGTH.

FOR DRILLED PIERS, SEE SPECIAL PROVISIONS.

METALLIZE THE PERMANENT STEEL CASINGS FOR DRILLED PIERS FROM THE TOP OF THE DRILLED PIERS TO ELEVATION -3.000. NO FIELD SPLICING OF THE CASINGS IS ALLOWED IN THE METALLIZED ZONE. REPAIR DAMAGED COATINGS IN ACCORDANCE WITH THE THERMAL SPRAYED COATINGS (METALLIZATION) SPECIAL PROVISION FOR EXPOSED SURFACES.

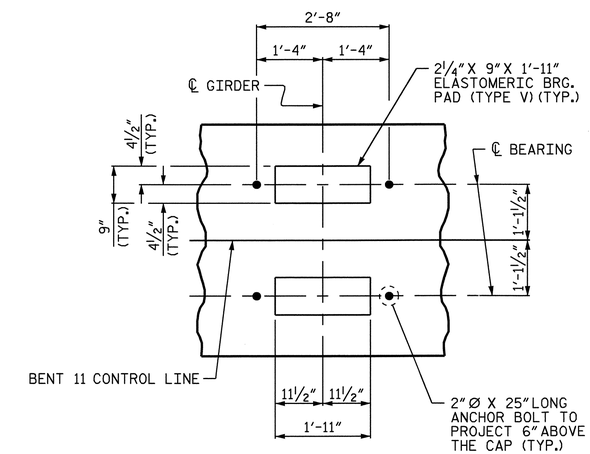

DETAIL "A"

(TYP. EA. GIRDER)

PROJECT NO. B-2532

CRAVEN COUNTY

STATION: 31+21.29 -L-

SHEET 1 OF 2

STATE OF NORTH CAROLINA
DEPARTMENT OF TRANSPORTATION
RALEIGH

SUBSTRUCTURE

BENT 11

NORTH CAROLINA PROFESSIONAL SEAL 21638 ENGINEER LAURA E. SUTTON
11/20/06

REVISIONS						SHEET NO.
NO.	BY:	DATE:	NO.	BY:	DATE:	S-101
1			3			TOTAL SHEETS
2			4			348

DRAWN BY : P.C. BREWER DATE : 7/25/06
CHECKED BY : B.L. GREEN DATE : 7/26/06

24-OCT-2006 14:39
r:\Structures\pbrewer\Microstation\B2532_sd_BT_01.dgn
LSUTTON

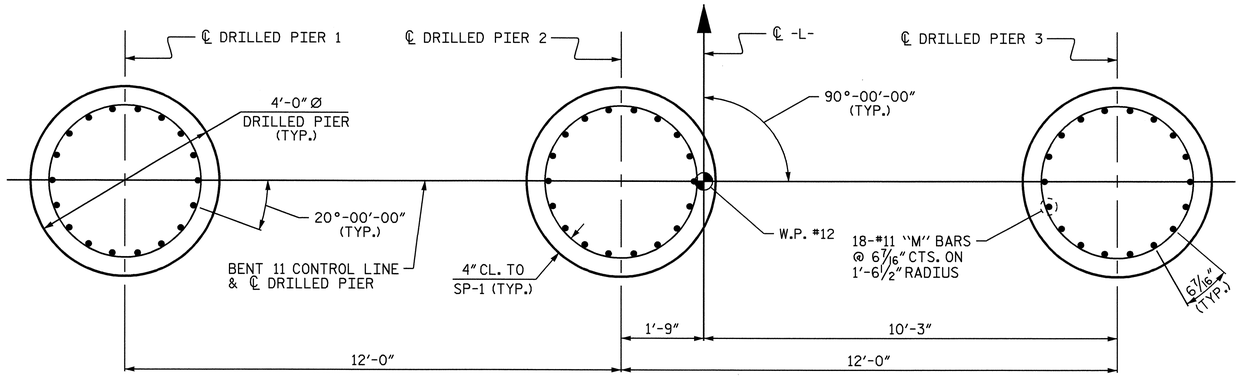

PLAN OF DRILLED PIERS

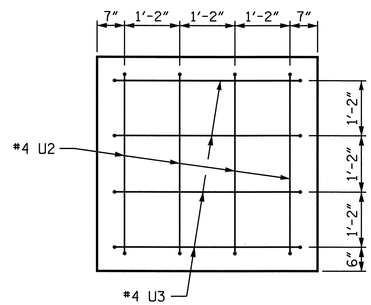

VIEW X-X

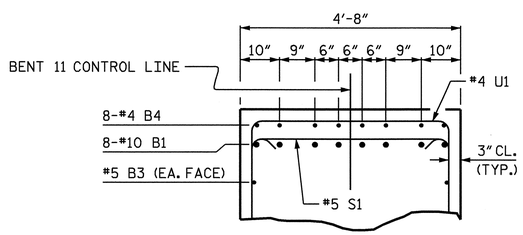

SECTION B-B

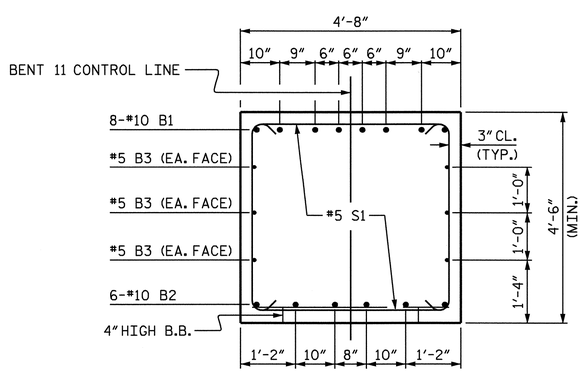

SECTION A-A

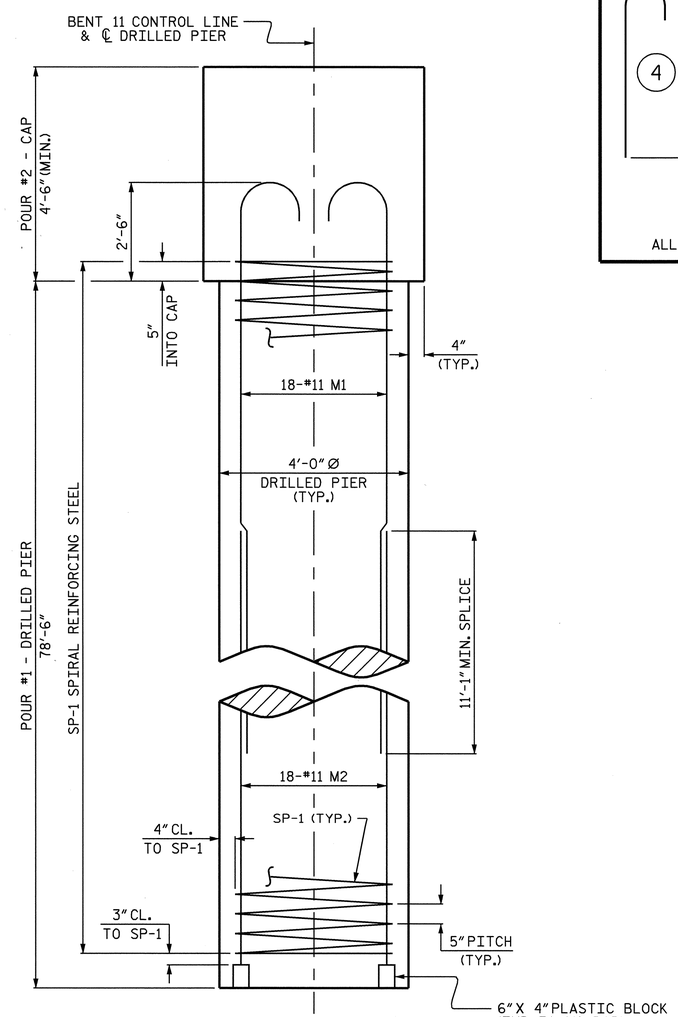

END ELEVATION

BAR TYPES

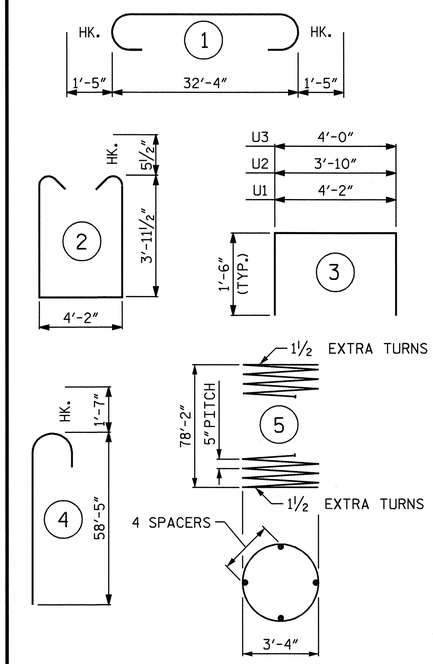

ALL BAR DIMENSIONS ARE OUT TO OUT.

BILL OF MATERIAL

BENT 11

BAR	NO.	SIZE	TYPE	LENGTH	WEIGHT
✳B1	8	#10	1	35'-2"	1211
✳B2	6	#10	STR	32'-6"	839
✳B3	6	#5	STR	32'-6"	203
✳B4	8	#4	STR	12'-9"	68
✳M1	54	#11	4	60'-0"	17214
✳M2	54	#11	STR	36'-2"	10376
✳S1	36	#5	2	13'-0"	488
✳U1	32	#4	3	7'-2"	153
✳U2	8	#4	3	6'-10"	37
✳U3	8	#4	3	7'-0"	37
✳EPOXY COATED REINFORCING STEEL					30,626 LBS.
✳SP-1	3	▲	5	1970'-6"	6166
✳EPOXY COATED SPIRAL COLUMN REINFORCING STEEL					6,166 LBS.

CLASS AA CONCRETE (C.Y.)
POUR #2 - CAP = 26.3
TOTAL = 26.3

DRILLED PIER QUANTITIES:
DRILLED PIER CONCRETE (C.Y.)
POUR #1 - DRILLED PIERS = 109.6
4'-0" Ø DRILLED PIERS = 235.50 LIN. FT.
PERMANENT STEEL CASING FOR 4'-0" Ø DRILLED PIERS = 162.80 LIN. FT.
CSL TUBES = 972.00 LIN. FT.

▲ THE SP-1 SPIRAL REINFORCING STEEL SHALL BE W31 OR D-31 COLD DRAWN WIRE OR #5 PLAIN OR DEFORMED BAR.

PROJECT NO. B-2532
CRAVEN COUNTY
STATION: 31+21.29 -L-

SHEET 2 OF 2

STATE OF NORTH CAROLINA
DEPARTMENT OF TRANSPORTATION
RALEIGH

SUBSTRUCTURE

BENT 11

NORTH CAROLINA PROFESSIONAL SEAL 21638 ENGINEER LAURA E. SUTTON
11/30/06

REVISIONS						SHEET NO.
NO.	BY:	DATE:	NO.	BY:	DATE:	S-102
1			3			TOTAL SHEETS
2			4			348

DRAWN BY : P.C. BREWER DATE : 7/25/06
CHECKED BY : B.L. GREEN DATE : 7/26/06

30-NOV-2006 11:34
r:\Structures\pbrewer\Microstation\B2532_sd_BT_01.dgn
lsutton

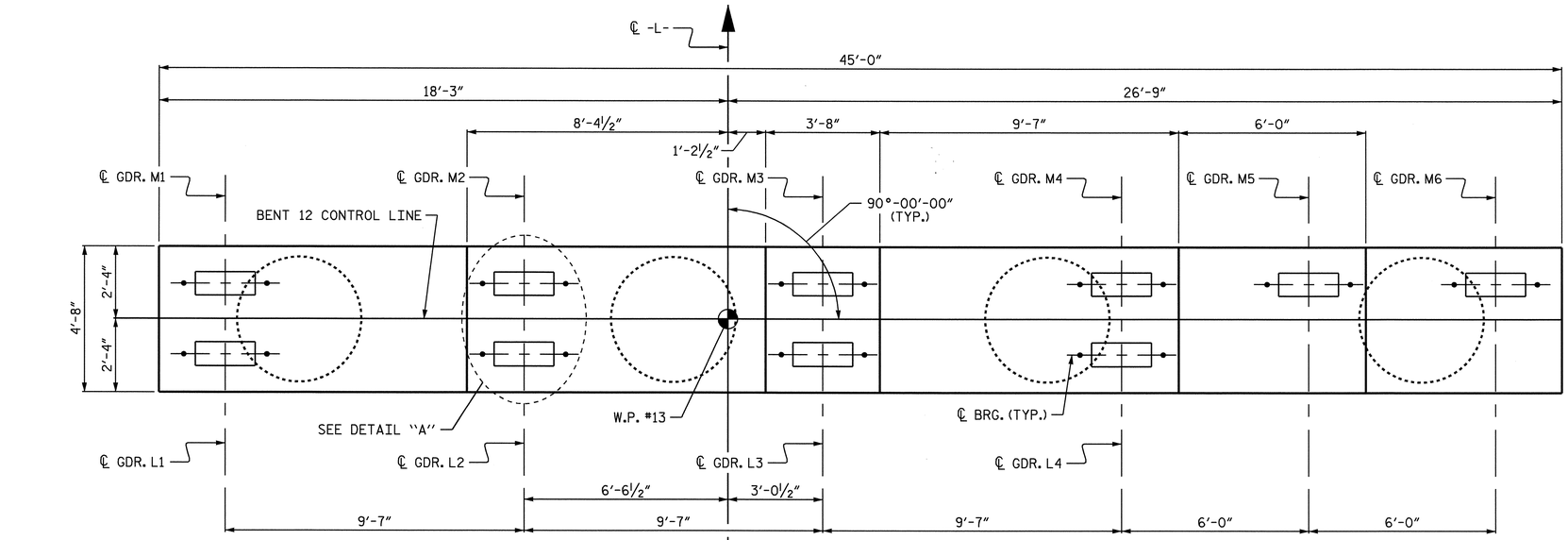

PLAN

SPAN "M"

SPAN "L"

NOTES:

STIRRUPS AND U1 BARS IN CAP MAY BE SHIFTED AS NECESSARY TO CLEAR ANCHOR BOLTS.

HOOKS ON "M" BARS MAY BE TURNED AS NECESSARY FOR PLACING REINFORCING STEEL.

ALL STEEL IN THE DRILLED PIERS IS INCLUDED IN THE PAY ITEMS FOR "EPOXY COATED REINFORCING STEEL" AND "EPOXY COATED SPIRAL COLUMN REINFORCING STEEL".

THE CONTRACTOR'S ATTENTION IS CALLED TO THE FACT THAT THE LONGITUDINAL REINFORCEMENT FOR THE DRILLED PIERS IS DETAILED WITH 3 FEET OF EXTRA LENGTH.

FOR DRILLED PIERS, SEE SPECIAL PROVISIONS.

METALLIZE THE PERMANENT STEEL CASINGS FOR DRILLED PIERS FROM THE TOP OF THE DRILLED PIERS TO ELEVATION -3.000. NO FIELD SPLICING OF THE CASINGS IS ALLOWED IN THE METALLIZED ZONE. REPAIR DAMAGED COATINGS IN ACCORDANCE WITH THE THERMAL SPRAYED COATINGS (METALLIZATION) SPECIAL PROVISION FOR EXPOSED SURFACES.

THE TOP SURFACE AREAS OF THE CAP AT BENT 12 SHALL BE CURED IN ACCORDANCE WITH THE STANDARD SPECIFICATIONS EXCEPT THE MEMBRANE CURING COMPOUND METHOD SHALL NOT BE USED.

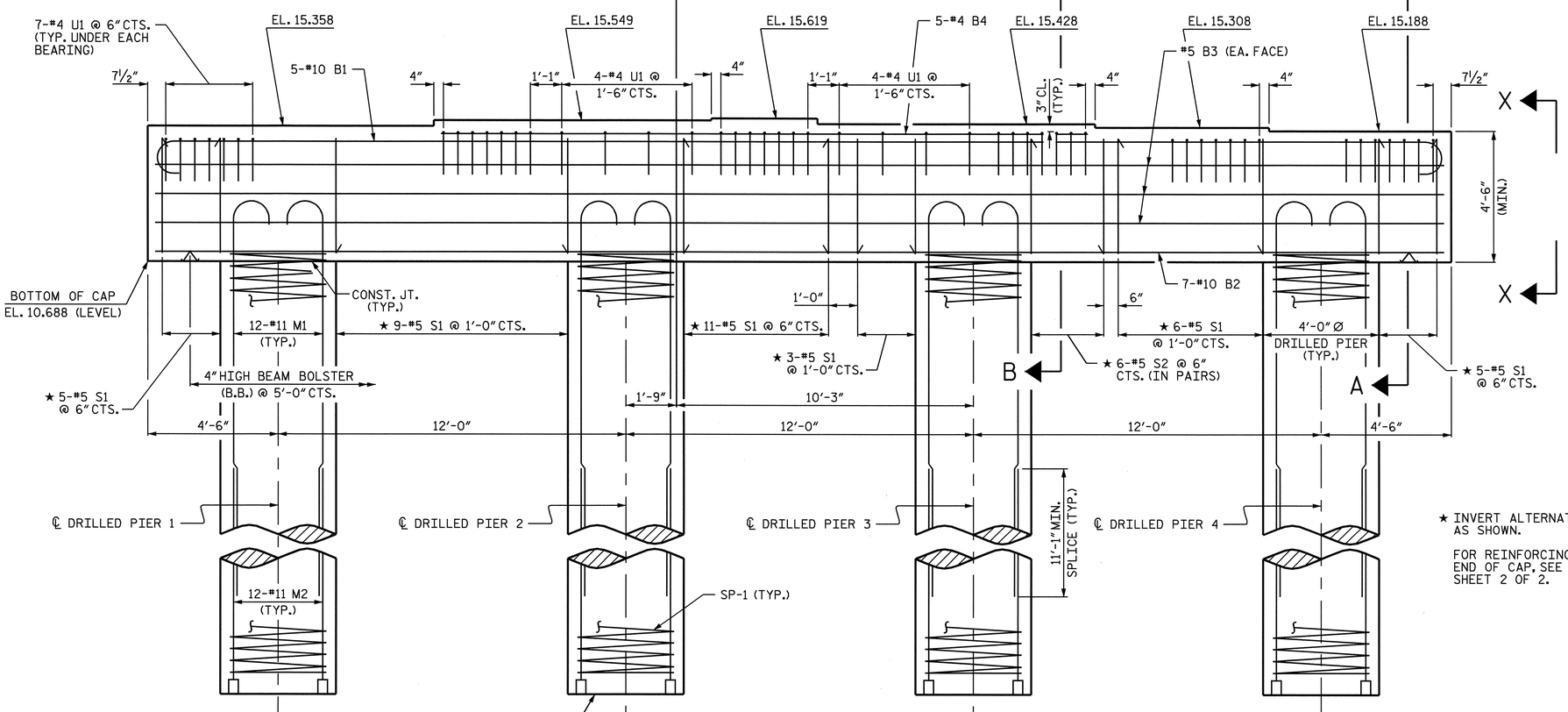

ELEVATION

★ INVERT ALTERNATE STIRRUPS AS SHOWN.

FOR REINFORCING STEEL IN END OF CAP, SEE VIEW X-X, SHEET 2 OF 2.

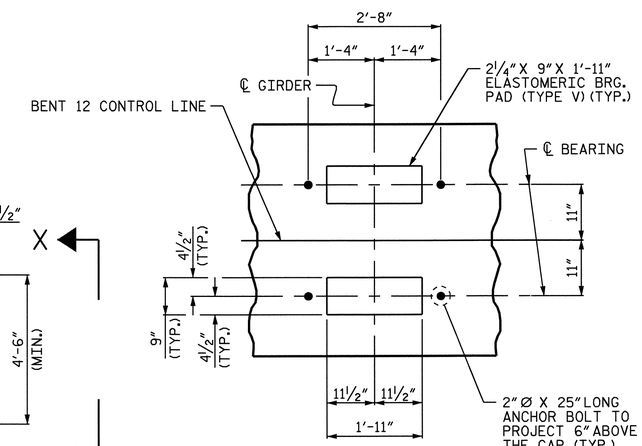

DETAIL "A"

(TYP. EA. GIRDER)

PROJECT NO. B-2532

CRAVEN COUNTY

STATION: 31+21.29 -L-

SHEET 1 OF 2

STATE OF NORTH CAROLINA
DEPARTMENT OF TRANSPORTATION
RALEIGH

SUBSTRUCTURE

BENT 12

NORTH CAROLINA PROFESSIONAL SEAL 21638 ENGINEER LAURA E. SUTTON
11/30/06

REVISIONS						SHEET NO.
NO.	BY:	DATE:	NO.	BY:	DATE:	S-103
1			3			TOTAL SHEETS
2			4			348

DRAWN BY : P.C. BREWER DATE : 8/8/06
CHECKED BY : B.L. GREEN DATE : 9/14/06

24-OCT-2006 14:39
r:\Structures\pbrewer\Microstation\B2532_sd_BT_01.dgn
LSUTTON

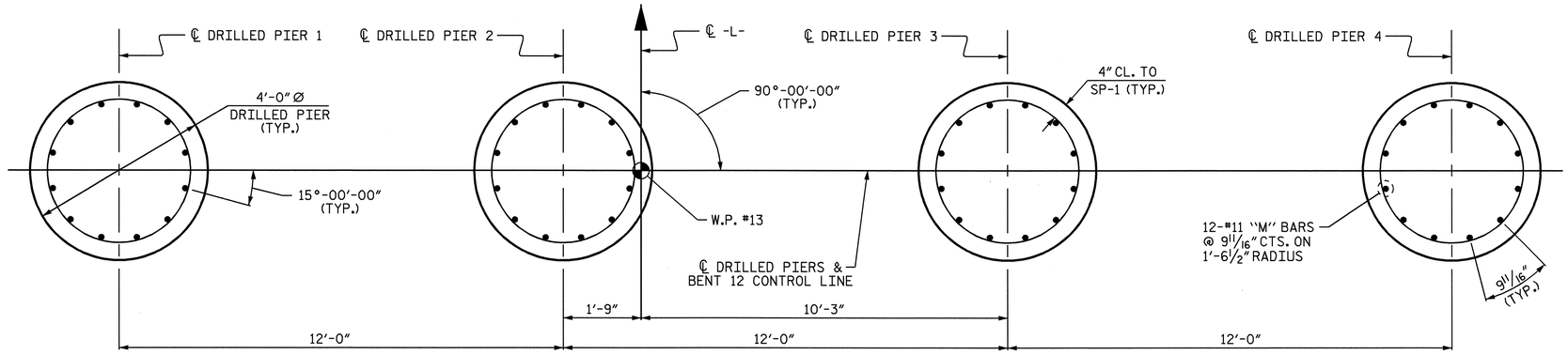

PLAN OF DRILLED PIERS

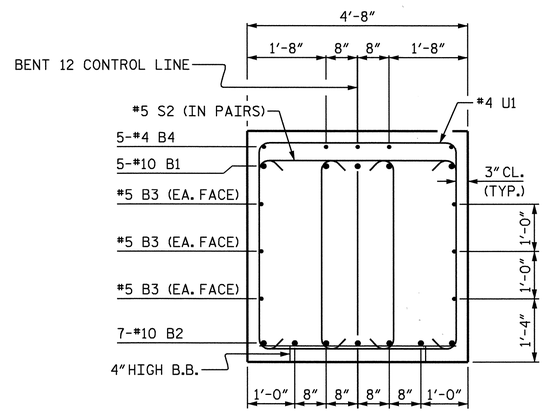

SECTION B-B

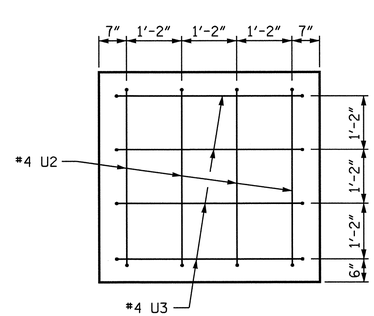

VIEW X-X

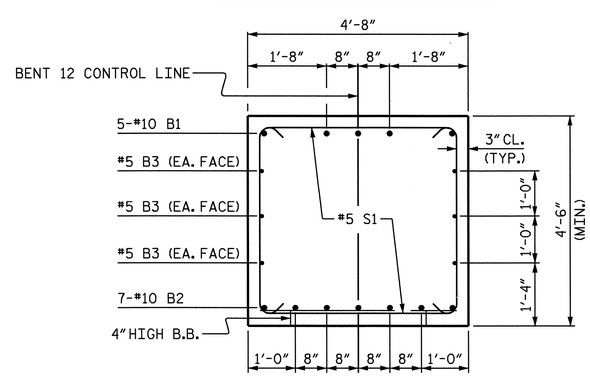

SECTION A-A

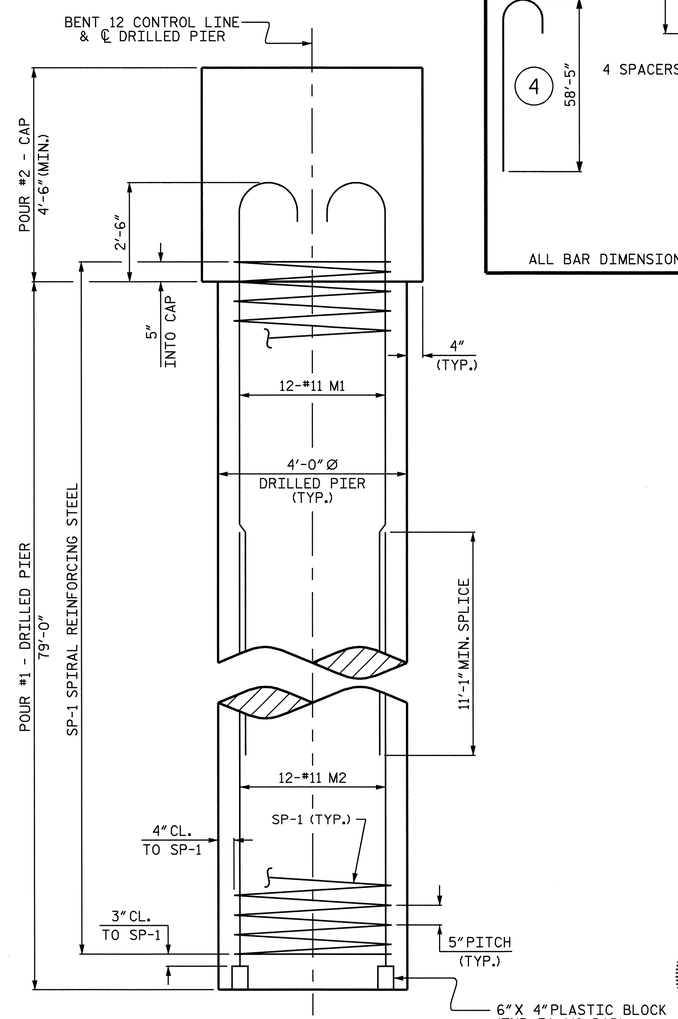

END ELEVATION

BAR TYPES

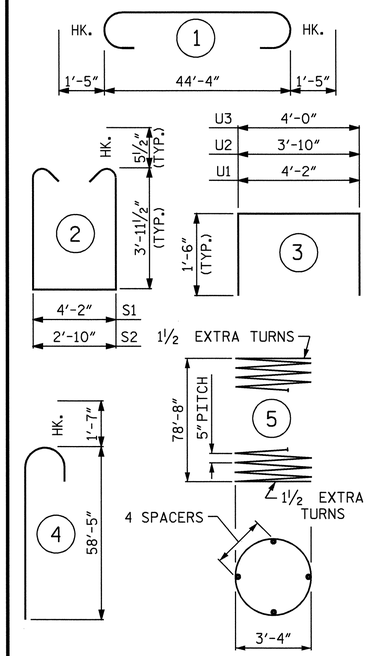

ALL BAR DIMENSIONS ARE OUT TO OUT.

BILL OF MATERIAL

BENT 12

BAR	NO.	SIZE	TYPE	LENGTH	WEIGHT
✳B1	5	#10	1	47'-2"	1015
✳B2	7	#10	STR	44'-6"	1340
✳B3	6	#5	STR	44'-6"	278
✳B4	5	#4	STR	22'-4"	75
✳M1	48	#11	4	60'-0"	15301
✳M2	48	#11	STR	36'-8"	9351
✳S1	39	#5	2	13'-0"	529
✳S2	12	#5	2	11'-8"	146
✳U1	50	#4	3	7'-2"	239
✳U2	8	#4	3	6'-10"	37
✳U3	8	#4	3	7'-0"	37
✳EPOXY COATED REINFORCING STEEL					28,348 LBS.
✳SP-1	4	▲	5	1980'-10"	8264
✳EPOXY COATED SPIRAL COLUMN REINFORCING STEEL					8,264 LBS.

CLASS AA CONCRETE (C.Y.)
POUR #2 - CAP = 36.7
TOTAL = 36.7

DRILLED PIER QUANTITIES:
DRILLED PIER CONCRETE (C.Y.)
POUR #1 - DRILLED PIERS = 147.1
4'-0" Ø
DRILLED PIERS = 316.00 LIN. FT.
PERMANENT STEEL
CASING FOR 4'-0" Ø
DRILLED PIERS = 194.75 LIN. FT.
CSL TUBES = 1304.00 LIN. FT.

▲ THE SP-1 SPIRAL REINFORCING STEEL SHALL BE W31 OR D-31 COLD DRAWN WIRE OR #5 PLAIN OR DEFORMED BAR.

PROJECT NO. B-2532
CRAVEN COUNTY
STATION: 31+21.29 -L-

SHEET 2 OF 2

STATE OF NORTH CAROLINA
DEPARTMENT OF TRANSPORTATION
RALEIGH

SUBSTRUCTURE

BENT 12

NORTH CAROLINA PROFESSIONAL SEAL 21638 ENGINEER LAURA E. SUTTON
11/30/06

REVISIONS						SHEET NO.
NO.	BY:	DATE:	NO.	BY:	DATE:	S-104
1			3			TOTAL SHEETS
2			4			348

DRAWN BY : P.C. BREWER DATE : 8/8/06
CHECKED BY : B.L. GREEN DATE : 9/14/06

30-NOV-2006 11:34
r:\Structures\pbrewer\Microstation\B2532_sd_BT_01.dgn
lsutton

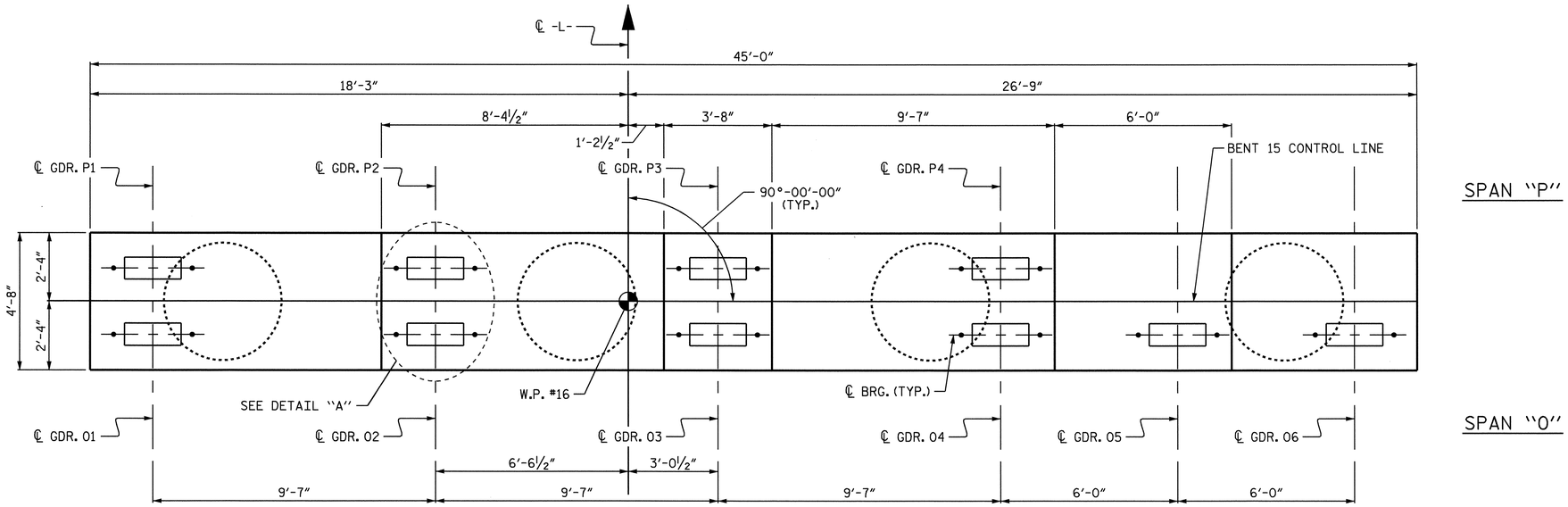

PLAN

NOTES:

STIRRUPS AND U1 BARS IN CAP MAY BE SHIFTED AS NECESSARY TO CLEAR ANCHOR BOLTS.

HOOKS ON "M" BARS MAY BE TURNED AS NECESSARY FOR PLACING REINFORCING STEEL.

ALL STEEL IN THE DRILLED PIERS IS INCLUDED IN THE PAY ITEMS FOR "EPOXY COATED REINFORCING STEEL" AND "EPOXY COATED SPIRAL COLUMN REINFORCING STEEL".

THE CONTRACTOR'S ATTENTION IS CALLED TO THE FACT THAT THE LONGITUDINAL REINFORCEMENT FOR THE DRILLED PIERS IS DETAILED WITH 3 FEET OF EXTRA LENGTH.

FOR DRILLED PIERS, SEE SPECIAL PROVISIONS.

METALLIZE THE PERMANENT STEEL CASINGS FOR DRILLED PIERS FROM THE TOP OF THE DRILLED PIERS TO ELEVATION -3.000. NO FIELD SPLICING OF THE CASINGS IS ALLOWED IN THE METALLIZED ZONE. REPAIR DAMAGED COATINGS IN ACCORDANCE WITH THE THERMAL SPRAYED COATINGS (METALLIZATION) SPECIAL PROVISION FOR EXPOSED SURFACES.

THE TOP SURFACE AREAS OF THE CAP AT BENT 12 SHALL BE CURED IN ACCORDANCE WITH THE STANDARD SPECIFICATIONS EXCEPT THE MEMBRANE CURING COMPOUND METHOD SHALL NOT BE USED.

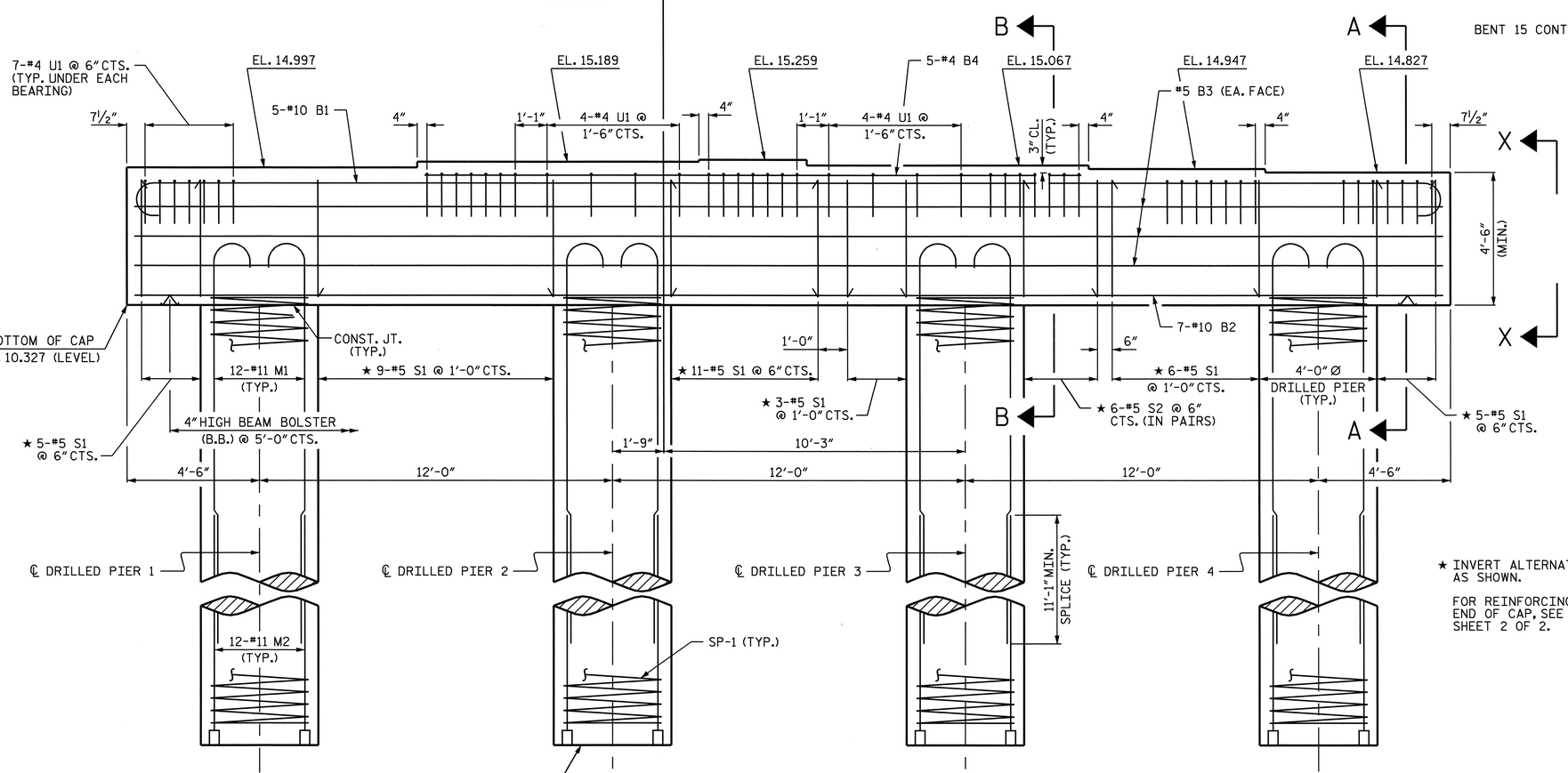

ELEVATION

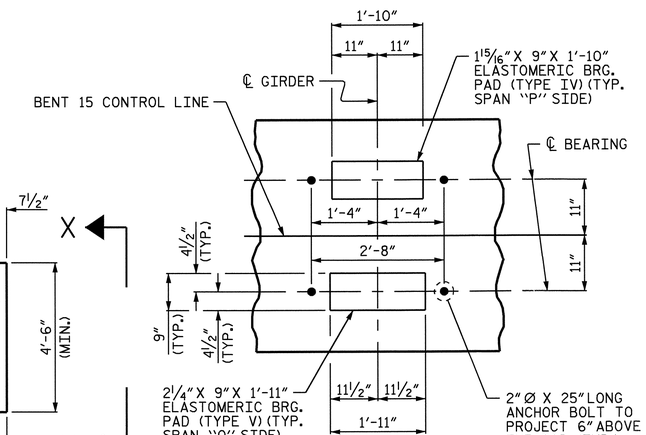

DETAIL "A"

(TYP. EA. GIRDER)

★ INVERT ALTERNATE STIRRUPS AS SHOWN.

FOR REINFORCING STEEL IN END OF CAP, SEE VIEW X-X, SHEET 2 OF 2.

PROJECT NO. B-2532

CRAVEN COUNTY

STATION: 31+21.29 -L-

SHEET 1 OF 2

STATE OF NORTH CAROLINA
DEPARTMENT OF TRANSPORTATION
RALEIGH

SUBSTRUCTURE

BENT 15

NORTH CAROLINA PROFESSIONAL SEAL 21638 ENGINEER LAURA E. SUTTON
11/30/06

REVISIONS						SHEET NO.
NO.	BY:	DATE:	NO.	BY:	DATE:	S-105
1			3			TOTAL SHEETS
2			4			348

DRAWN BY : P.C. BREWER DATE : 8/8/06
CHECKED BY : B.L. GREEN DATE : 9/14/06

24-OCT-2006 14:39
r:\Structures\pbrewer\Microstation\B2532_sd_BT_01.dgn
LSUTTON

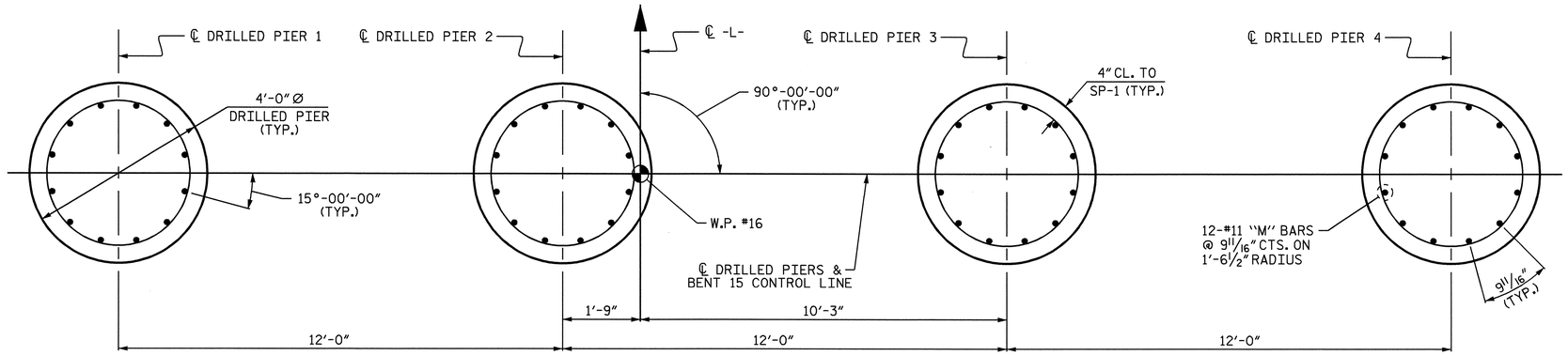

PLAN OF DRILLED PIERS

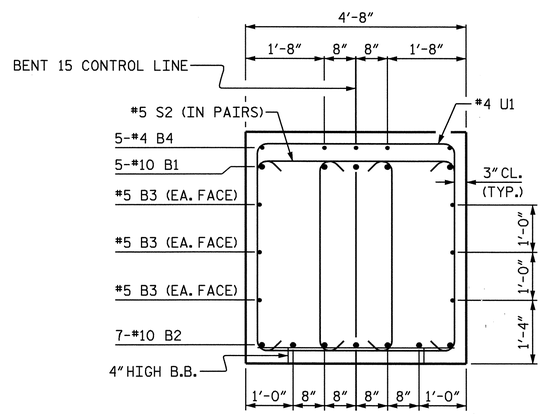

SECTION B-B

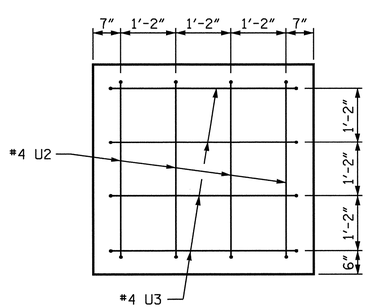

VIEW X-X

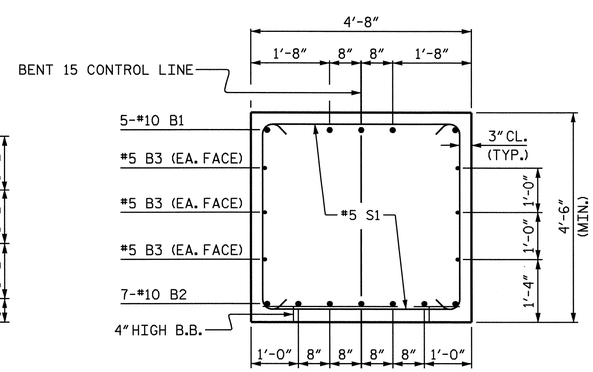

SECTION A-A

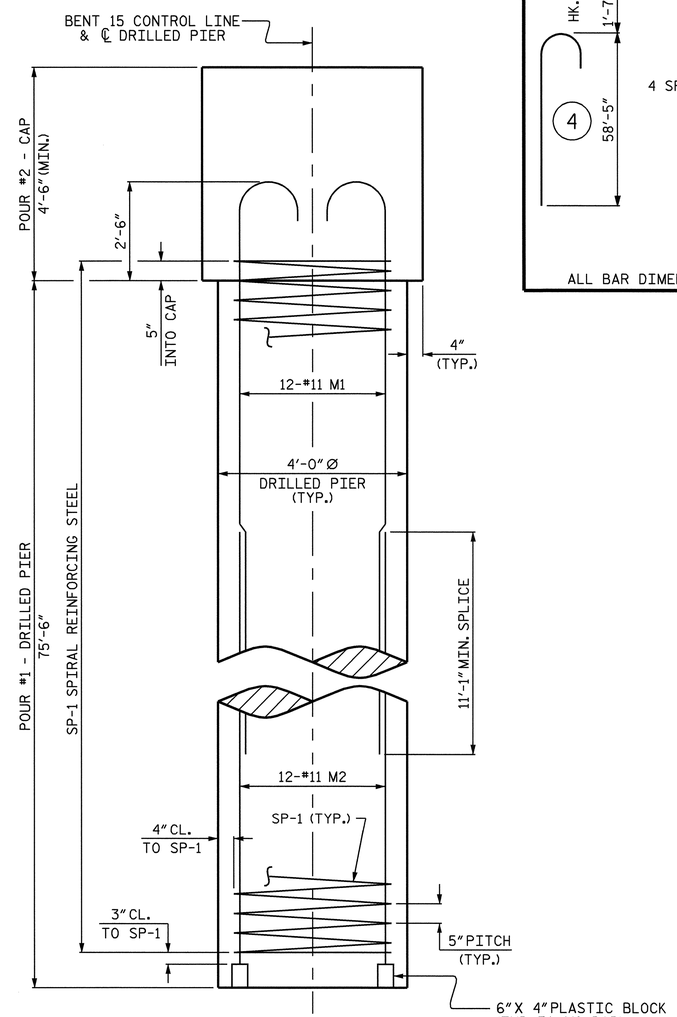

END ELEVATION

BAR TYPES

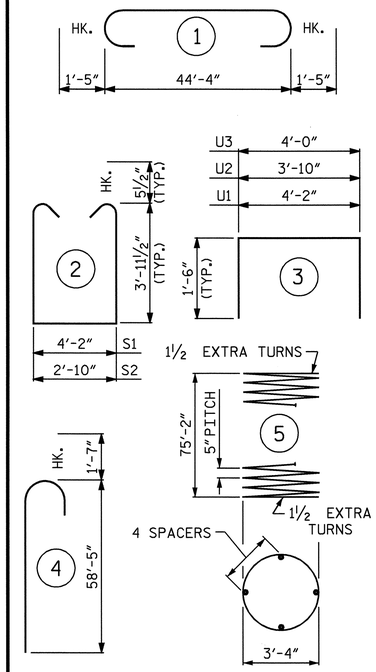

ALL BAR DIMENSIONS ARE OUT TO OUT.

BILL OF MATERIAL

BENT 15

BAR	NO.	SIZE	TYPE	LENGTH	WEIGHT
✳B1	5	#10	1	47'-2"	1015
✳B2	7	#10	STR	44'-6"	1340
✳B3	6	#5	STR	44'-6"	278
✳B4	5	#4	STR	22'-4"	75
✳M1	48	#11	4	60'-0"	15301
✳M2	48	#11	STR	33'-2"	8458
✳S1	39	#5	2	13'-0"	529
✳S2	12	#5	2	11'-8"	146
✳U1	50	#4	3	7'-2"	239
✳U2	8	#4	3	6'-10"	37
✳U3	8	#4	3	7'-0"	37
✳EPOXY COATED REINFORCING STEEL					27,455 LBS.
✳SP-1	4	▲	5	1898'-4"	7920
✳EPOXY COATED SPIRAL COLUMN REINFORCING STEEL					7,920 LBS.

CLASS AA CONCRETE (C.Y.)
POUR #2 - CAP = 36.7
TOTAL = 36.7

DRILLED PIER QUANTITIES:
DRILLED PIER CONCRETE (C.Y.)
POUR #1 - DRILLED PIERS = 140.6
4'-0" Ø DRILLED PIERS = 302.00 LIN. FT.
PERMANENT STEEL CASING FOR 4'-0" Ø DRILLED PIERS = 169.31 LIN. FT.
CSL TUBES = 1248.00 LIN. FT.

▲ THE SP-1 SPIRAL REINFORCING STEEL SHALL BE W31 OR D-31 COLD DRAWN WIRE OR #5 PLAIN OR DEFORMED BAR.

PROJECT NO. B-2532
CRAVEN COUNTY
STATION: 31+21.29 -L-

SHEET 2 OF 2

STATE OF NORTH CAROLINA
DEPARTMENT OF TRANSPORTATION
RALEIGH

SUBSTRUCTURE

BENT 15

NORTH CAROLINA PROFESSIONAL SEAL 21638 ENGINEER LAURA E. SUTTON
11/30/06

REVISIONS						SHEET NO.
NO.	BY:	DATE:	NO.	BY:	DATE:	S-106
1			3			TOTAL SHEETS
2			4			348

DRAWN BY : P.C. BREWER DATE : 8/8/06
CHECKED BY : B.L. GREEN DATE : 9/14/06

30-NOV-2006 11:33
r:\Structures\pbrewer\Microstation\B2532_sd_BT_01.dgn
lsutton

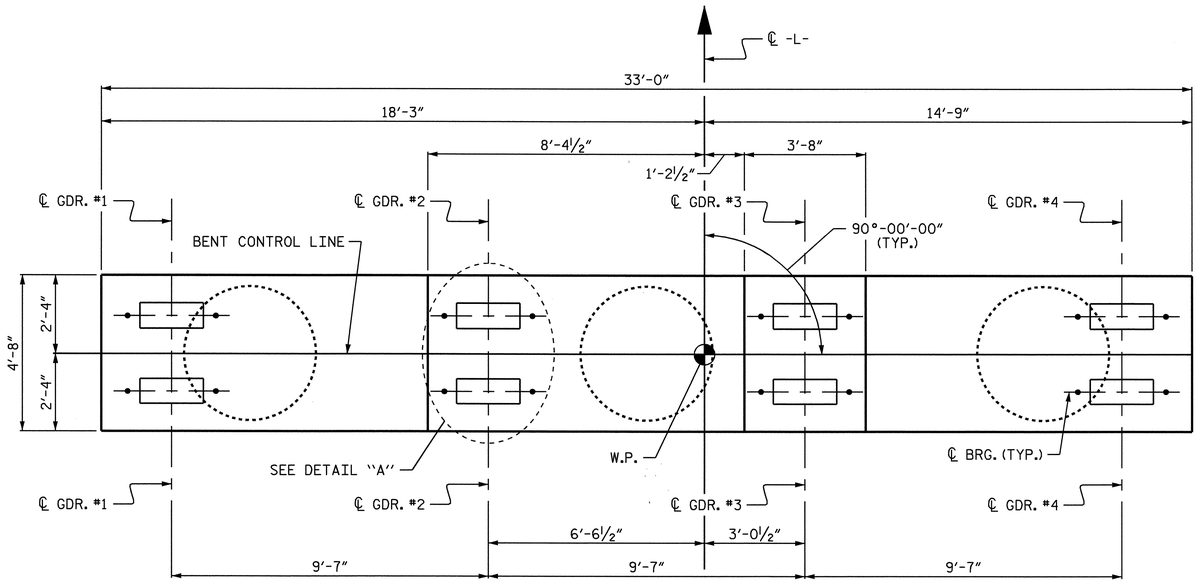

PLAN

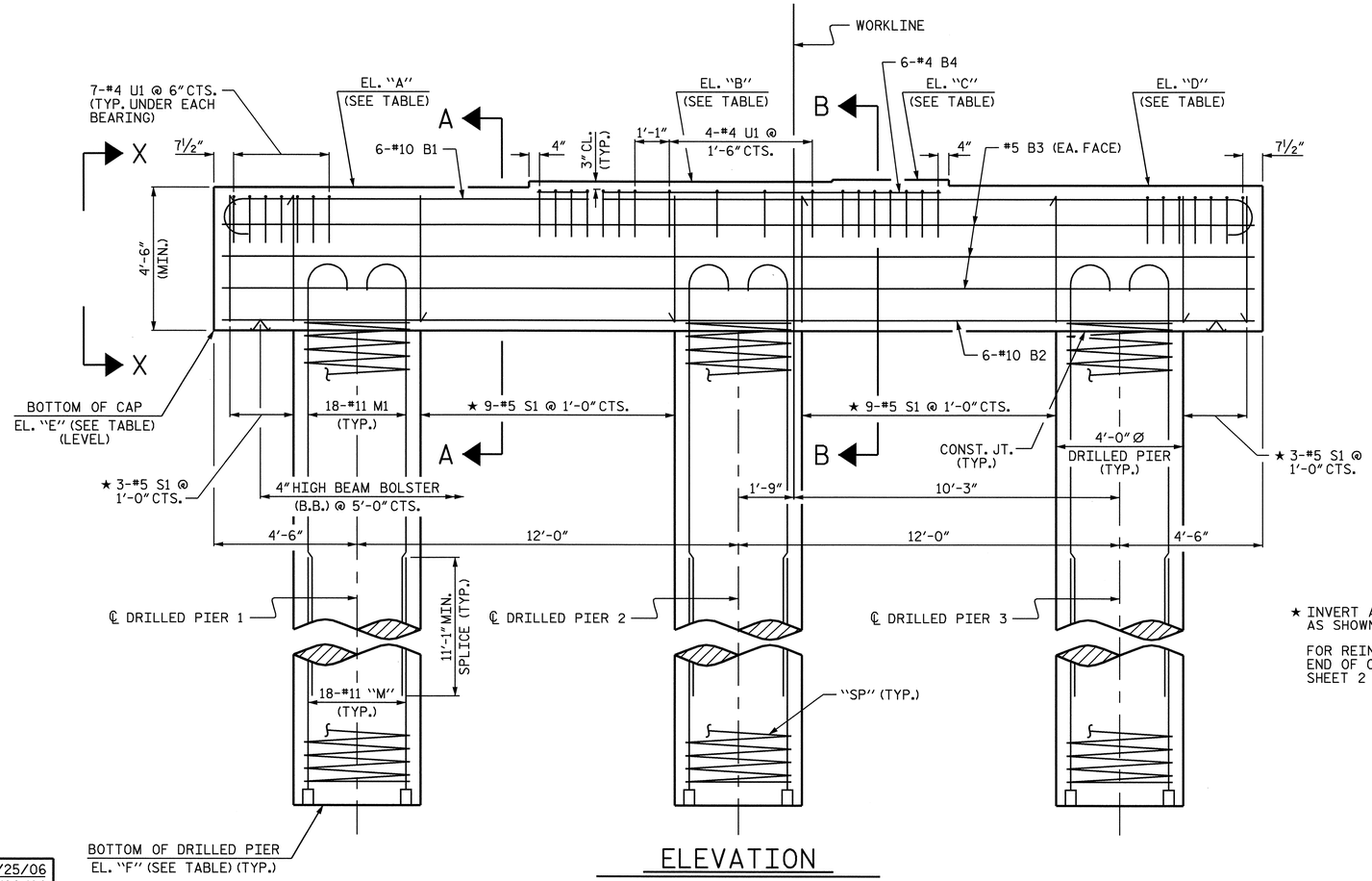

ELEVATION

★ INVERT ALTERNATE STIRRUPS AS SHOWN.

FOR REINFORCING STEEL IN END OF CAP, SEE VIEW X-X, SHEET 2 OF 2.

NOTES:

STIRRUPS AND U1 BARS IN CAP MAY BE SHIFTED AS NECESSARY TO CLEAR ANCHOR BOLTS.

HOOKS ON "M" BARS MAY BE TURNED AS NECESSARY FOR PLACING REINFORCING STEEL.

ALL STEEL IN THE DRILLED PIERS IS INCLUDED IN THE PAY ITEMS FOR "EPOXY COATED REINFORCING STEEL" AND "EPOXY COATED SPIRAL COLUMN REINFORCING STEEL".

THE CONTRACTOR'S ATTENTION IS CALLED TO THE FACT THAT THE LONGITUDINAL REINFORCEMENT FOR THE DRILLED PIERS IS DETAILED WITH 3 FEET OF EXTRA LENGTH.

FOR DRILLED PIERS, SEE SPECIAL PROVISIONS.

METALLIZE THE PERMANENT STEEL CASINGS FOR DRILLED PIERS FROM THE TOP OF THE DRILLED PIERS TO ELEVATION -3.000. NO FIELD SPLICING OF THE CASINGS IS ALLOWED IN THE METALLIZED ZONE. REPAIR DAMAGED COATINGS IN ACCORDANCE WITH THE THERMAL SPRAYED COATINGS (METALLIZATION) SPECIAL PROVISION FOR EXPOSED SURFACES.

ELEVATION TABLE

	EL. "A"	EL. "B"	EL. "C"	EL. "D"	EL. "E"	EL. "F"
BENT 16	13.808	14.000	14.070	13.878	9.308	-60.192
BENT 18	10.238	10.430	10.500	10.308	5.738	-60.262

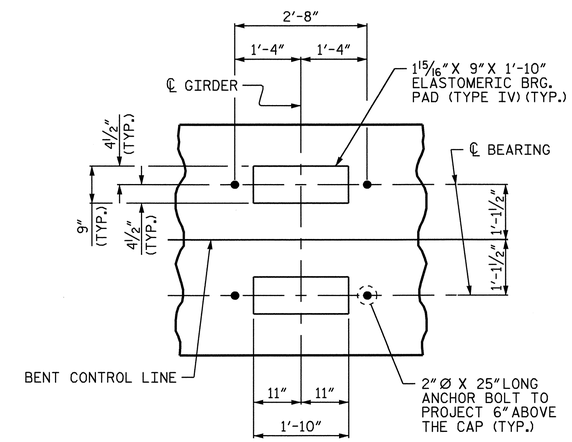

DETAIL "A"

(TYP. EA. GIRDER)

PROJECT NO. B-2532

CRAVEN COUNTY

STATION: 31+21.29 -L-

SHEET 1 OF 2

STATE OF NORTH CAROLINA
DEPARTMENT OF TRANSPORTATION
RALEIGH

SUBSTRUCTURE

BENTS 16 & 18

NORTH CAROLINA PROFESSIONAL SEAL 21638 ENGINEER LAURA E. SUTTON
11/24/06

REVISIONS						SHEET NO.
NO.	BY:	DATE:	NO.	BY:	DATE:	S-107
1			3			TOTAL SHEETS
2			4			348

DRAWN BY : P.C. BREWER DATE : 7/25/06
CHECKED BY : B.L. GREEN DATE : 7/26/06

24-OCT-2006 14:39
r:\Structures\pbrewer\Microstation\B2532_sd_BT_01.dgn
LSUTTON

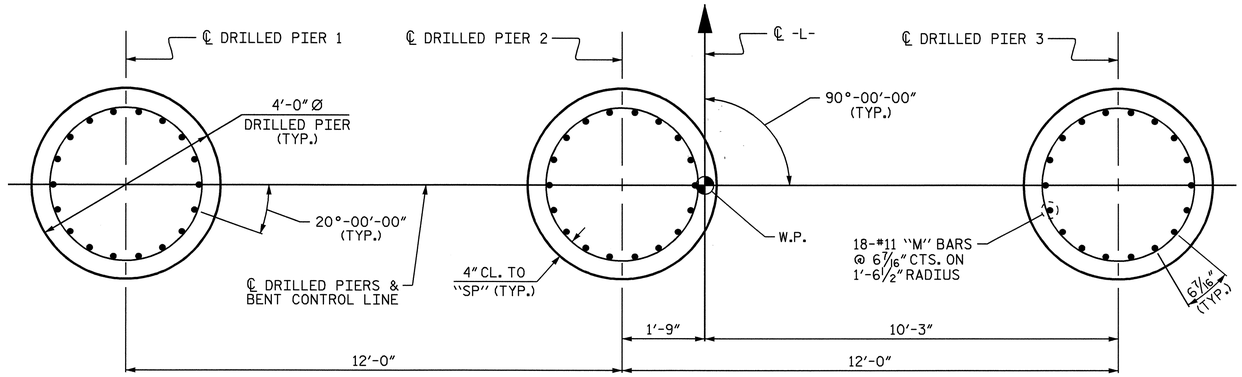

PLAN OF DRILLED PIERS

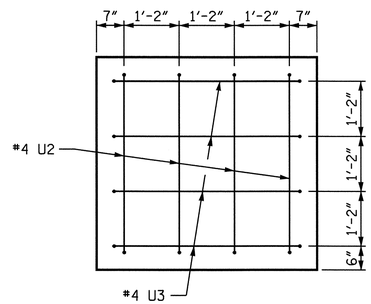

VIEW X-X

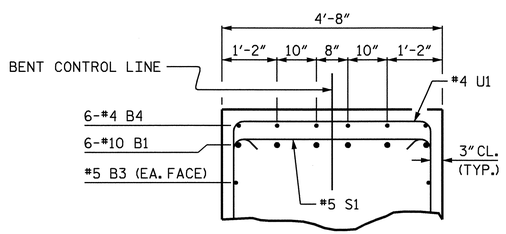

SECTION B-B

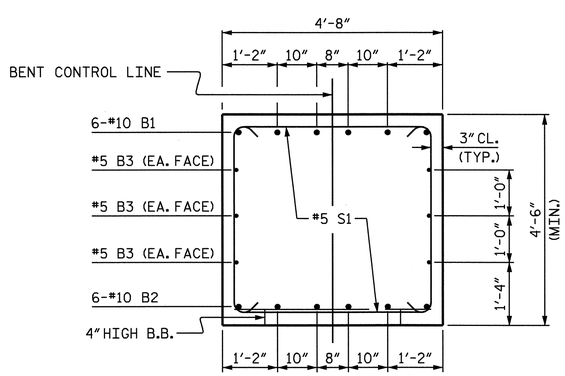

SECTION A-A

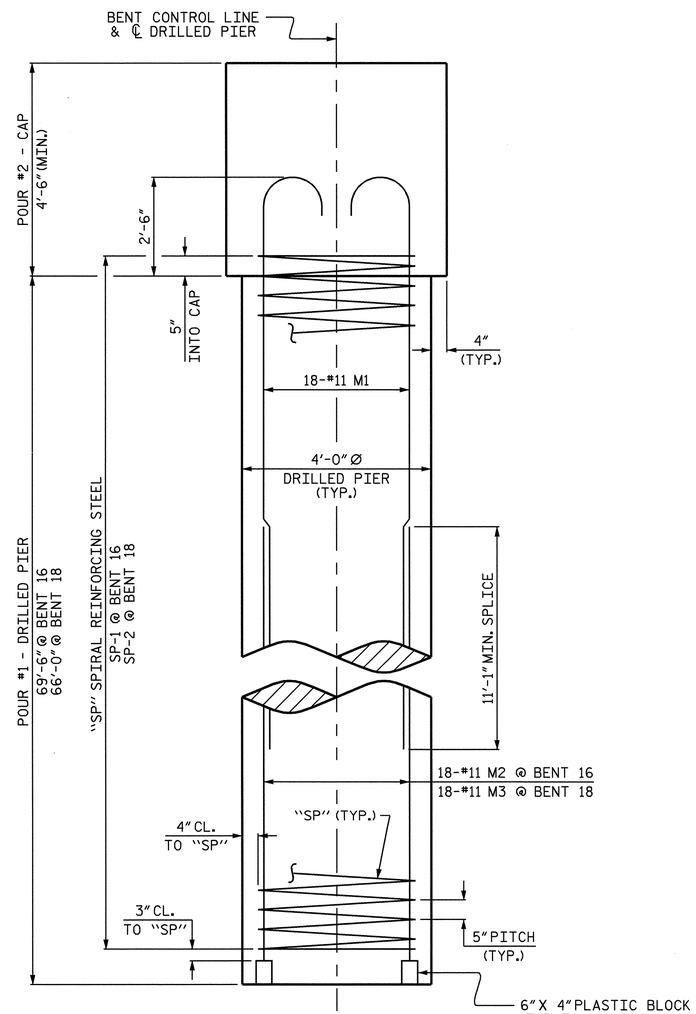

END ELEVATION

BILL OF MATERIAL

BENT 16

BAR	NO.	SIZE	TYPE	LENGTH	WEIGHT
✱B1	6	#10	1	35'-2"	908
✱B2	6	#10	STR	32'-6"	839
✱B3	6	#5	STR	32'-6"	203
✱B4	6	#4	STR	12'-9"	51
✱M1	54	#11	4	60'-0"	17214
✱M2	54	#11	STR	27'-2"	7794
✱S1	24	#5	2	13'-0"	325
✱U1	32	#4	3	7'-2"	153
✱U2	8	#4	3	6'-10"	37
✱U3	8	#4	3	7'-0"	37
✱EPOXY COATED REINFORCING STEEL					27,561 LBS.
✱SP-1	3	▲	5	1743'-7"	5456
✱EPOXY COATED SPIRAL COLUMN REINFORCING STEEL					5,456 LBS.

CLASS AA CONCRETE (C.Y.)
POUR #2 - CAP = 26.3
TOTAL = 26.3

DRILLED PIER QUANTITIES:
DRILLED PIER CONCRETE (C.Y.)
POUR #1 - DRILLED PIERS = 97.0
4'-0" Ø DRILLED PIERS = 208.50 LIN. FT.
PERMANENT STEEL CASING FOR 4'-0" Ø DRILLED PIERS = 117.92 LIN. FT.
CSL TUBES = 864.00 LIN. FT.

BENT 18

BAR	NO.	SIZE	TYPE	LENGTH	WEIGHT
✱B1	6	#10	1	35'-2"	908
✱B2	6	#10	STR	32'-6"	839
✱B3	6	#5	STR	32'-6"	203
✱B4	6	#4	STR	12'-9"	51
✱M1	54	#11	4	60'-0"	17214
✱M3	54	#11	STR	23'-8"	6790
✱S1	24	#5	2	13'-0"	325
✱U1	32	#4	3	7'-2"	153
✱U2	8	#4	3	6'-10"	37
✱U3	8	#4	3	7'-0"	37
✱EPOXY COATED REINFORCING STEEL					26,557 LBS.
✱SP-2	3	▲	5	1661'-0"	5197
✱EPOXY COATED SPIRAL COLUMN REINFORCING STEEL					5,197 LBS.

CLASS AA CONCRETE (C.Y.)
POUR #2 - CAP = 26.3
TOTAL = 26.3

DRILLED PIER QUANTITIES:
DRILLED PIER CONCRETE (C.Y.)
POUR #1 - DRILLED PIERS = 92.2
4'-0" Ø DRILLED PIERS = 198.00 LIN. FT.
PERMANENT STEEL CASING FOR 4'-0" Ø DRILLED PIERS = 107.21 LIN. FT.
CSL TUBES = 822.00 LIN. FT.

▲ THE SP-1 AND SP-2 SPIRAL REINFORCING STEEL SHALL BE W31 OR D-31 COLD DRAWN WIRE OR #5 PLAIN OR DEFORMED BAR.

BAR TYPES

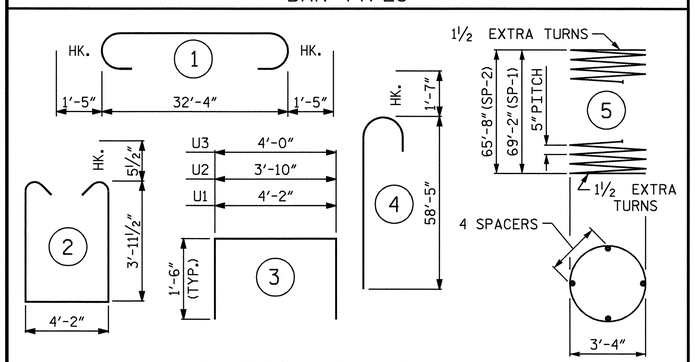

ALL BAR DIMENSIONS ARE OUT TO OUT.

PROJECT NO. B-2532
CRAVEN COUNTY
STATION: 31+21.29 -L-

SHEET 2 OF 2

STATE OF NORTH CAROLINA
DEPARTMENT OF TRANSPORTATION
RALEIGH

SUBSTRUCTURE

BENTS 16 & 18

NORTH CAROLINA PROFESSIONAL SEAL 21638 ENGINEER LAURA E. SUTTON
11/30/06

REVISIONS						SHEET NO.
NO.	BY:	DATE:	NO.	BY:	DATE:	S-108
1			3			TOTAL SHEETS
2			4			348

DRAWN BY : P.C. BREWER DATE : 7/25/06
CHECKED BY : B.L. GREEN DATE : 7/26/06

30-NOV-2006 11:33
r:\Structures\pbrewer\Microstation\B2532_sd_BT_01.dgn
lsutton

NOTES:

▲ FOR LOCATION OF ELEVATION BETWEEN BRIDGE SEATS, SEE SECTION A-A ON SHEET 2 OF 2.

★ THIS ELEVATION TAKEN ON FILL FACE OF BACKWALL.

STIRRUPS AND U2 BARS IN CAP MAY BE SHIFTED AS NECESSARY TO CLEAR ANCHOR BOLTS.

#5 V1 BARS IN BACKWALL SHALL BE PLACED 3" CLEAR FROM THE TOP OF THE BACKWALL.

THE TOP SURFACE AREAS OF THE END BENT SHALL BE CURED IN ACCORDANCE WITH THE STANDARD SPECIFICATIONS EXCEPT THE MEMBRANE CURING COMPOUND METHOD SHALL NOT BE USED.

BACKWALL SHALL BE PLACED BEFORE APPLYING THE EPOXY PROTECTIVE COATING.

THE TOP SURFACE OF THE CAP EXCEPT THE BRIDGE SEAT BUILDUPS SHALL BE SLOPED TRANSVERSELY FROM THE FILL FACE TO THE BACK FACE AT THE RATE OF 2%.

CENTER UTILITIES IN BLOCKOUTS AND FILL ANNULAR SPACE AROUND UTILITY PIPE WITH JOINT FILLER IN ACCORDANCE WITH STANDARD SPECIFICATION ARTICLE 1028-1. SEE UTILITY PLANS FOR DETAILS.

IF ELECTRICAL SERVICE IS REQUIRED TO EXTEND THROUGH THE BACKWALL, THE CONTRACTOR SHALL SUBMIT PLANS AND DETAILS TO THE ENGINEER FOR APPROVAL PRIOR TO CONSTRUCTION OF END BENT. SEE VOLUME 3 - ELECTRICAL DRAWINGS.

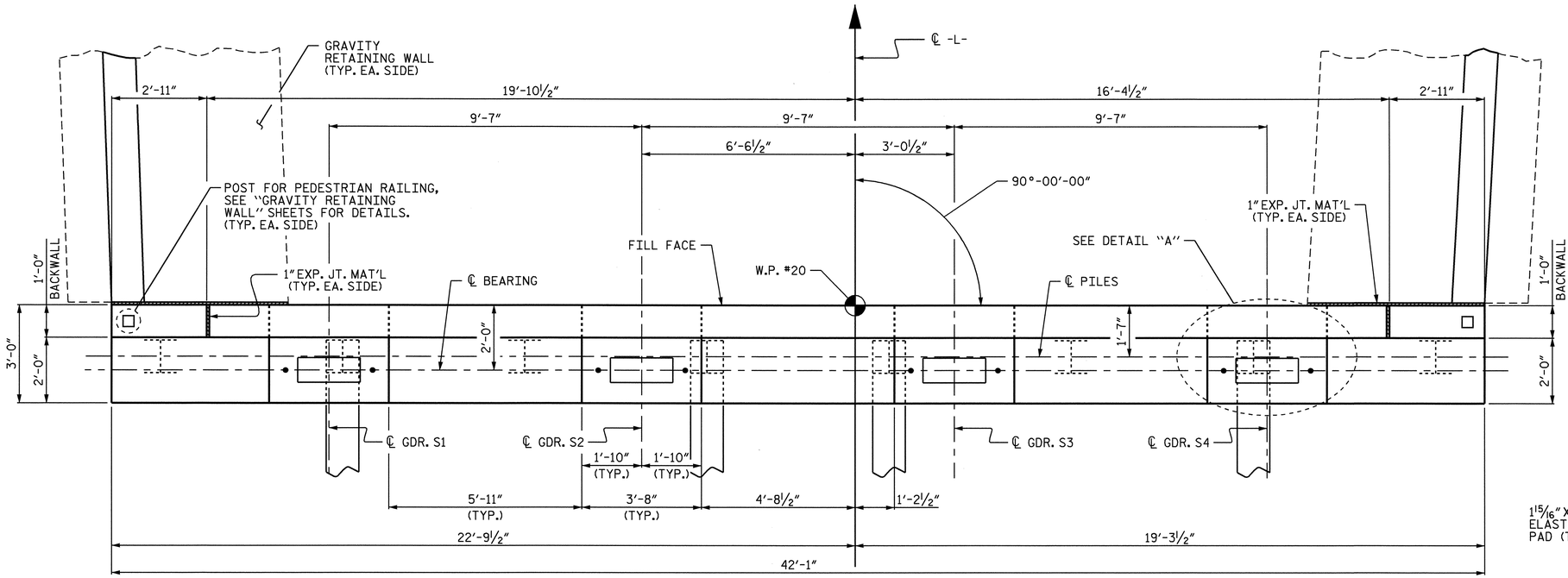

PLAN

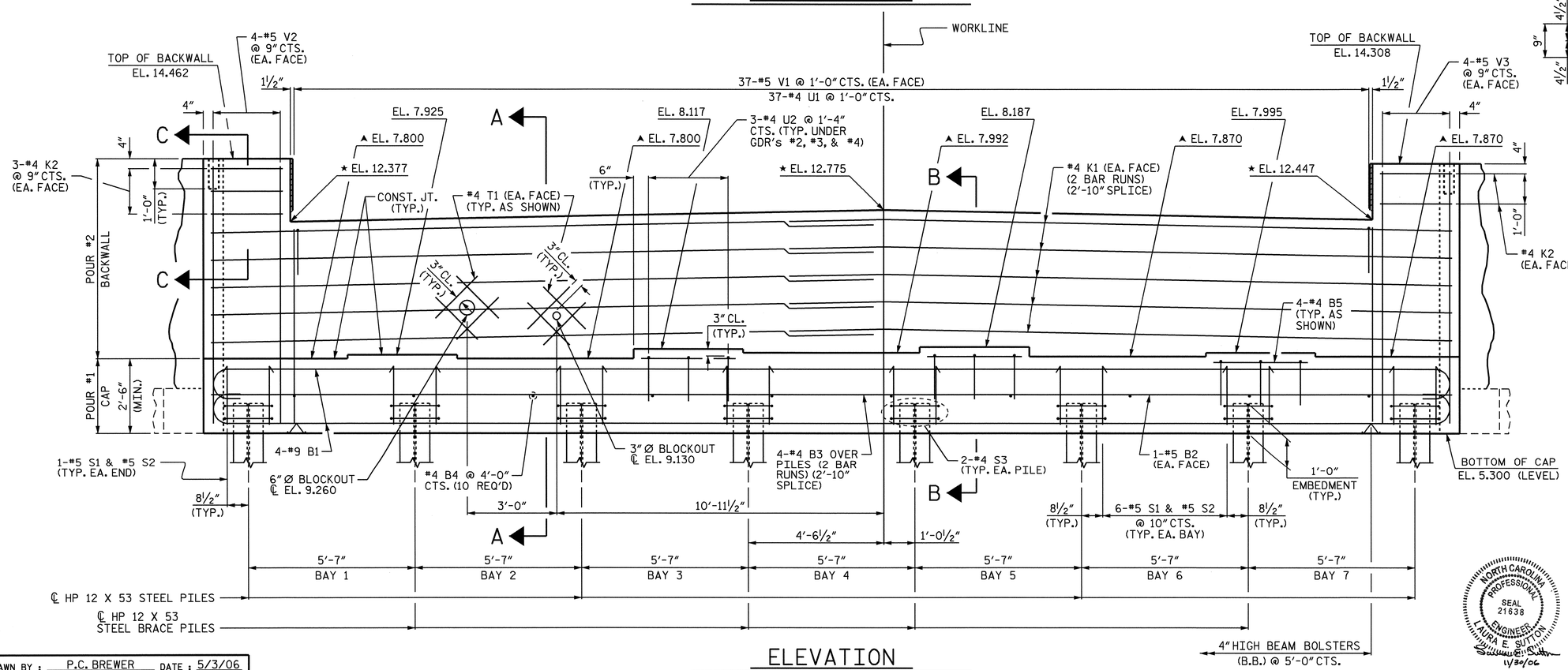

ELEVATION

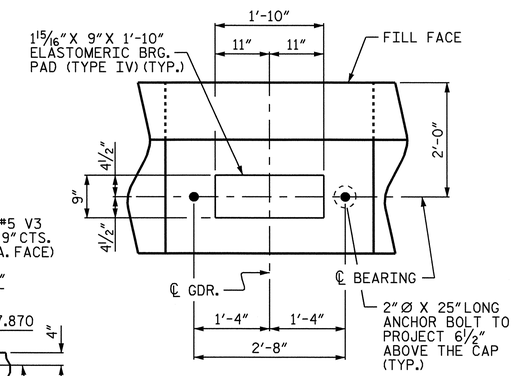

DETAIL "A"

(TYP. EA. GIRDER)

PROJECT NO. B-2532

CRAVEN COUNTY

STATION: 31+21.29 -L-

SHEET 1 OF 2

STATE OF NORTH CAROLINA
DEPARTMENT OF TRANSPORTATION
RALEIGH

SUBSTRUCTURE

END BENT 2

NORTH CAROLINA PROFESSIONAL SEAL 21638 ENGINEER LAURA E. SUTTON 11/30/06

REVISIONS						SHEET NO.
NO.	BY:	DATE:	NO.	BY:	DATE:	S-109
1			3			TOTAL SHEETS
2			4			348

DRAWN BY : P.C. BREWER DATE : 5/3/06
CHECKED BY : B.L. GREEN DATE : 5/06

30-NOV-2006 11:33
r:\Structures\pbrewer\Microstation\B2532_sd_EB_01.dgn
lsutton

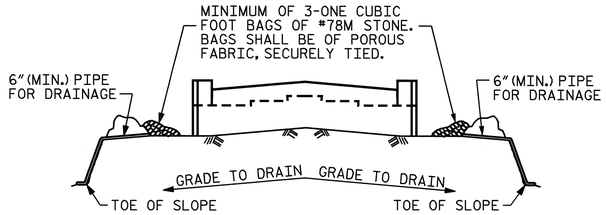

BAGGED STONE AND PIPE SHALL BE PLACED IMMEDIATELY AFTER COMPLETION OF END BENT EXCAVATION. PIPE MAY BE EITHER CONCRETE, CORRUGATED STEEL, CORRUGATED ALUMINUM ALLOY, OR CORRUGATED PLASTIC. PERFORATED PIPE WILL NOT BE ALLOWED.

BAGGED STONE SHALL REMAIN IN PLACE UNTIL THE ENGINEER DIRECTS THAT IT BE REMOVED. THE CONTRACTOR SHALL REMOVE AND DISPOSE OF SILT ACCUMULATIONS AT BAGGED STONE WHEN SO DIRECTED BY THE ENGINEER. BAGS SHALL BE REMOVED AND REPLACED WHENEVER THE ENGINEER DETERMINES THAT THEY HAVE DETERIORATED AND LOST THEIR EFFECTIVENESS.

NO SEPARATE PAYMENT WILL BE MADE FOR THIS WORK AND THE ENTIRE COST OF THIS WORK SHALL BE INCLUDED IN THE UNIT CONTRACT PRICE BID FOR THE SEVERAL PAY ITEMS.

TEMPORARY DRAINAGE AT END BENT

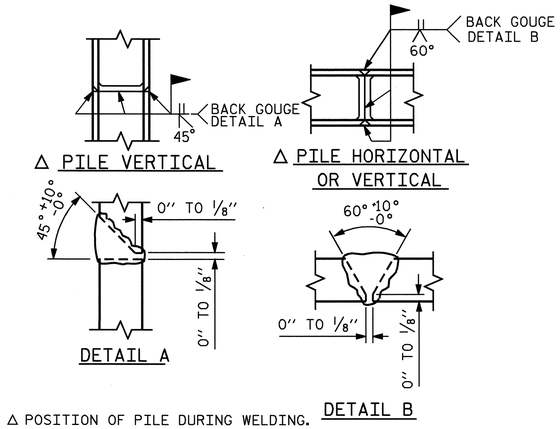

△ POSITION OF PILE DURING WELDING.

PILE SPLICE DETAILS

BAR TYPES

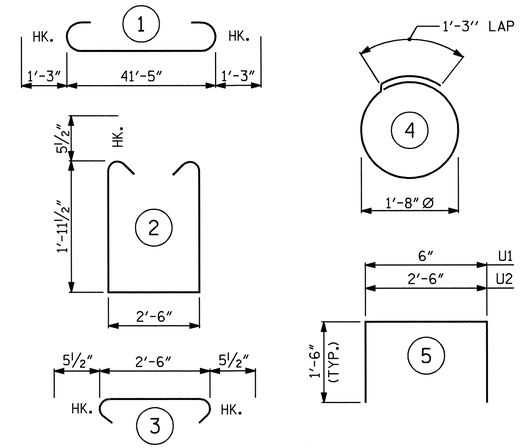

ALL BAR DIMENSIONS ARE OUT TO OUT.

BILL OF MATERIAL

END BENT 2

BAR	NUMBER	SIZE	TYPE	LENGTH	WEIGHT
* B1	8	9	1	43'-11"	1195
* B2	2	5	STR	41'-7"	87
* B3	8	4	STR	22'-3"	119
* B4	10	4	STR	2'-6"	17
* B5	12	4	STR	3'-2"	25
* K1	20	4	STR	22'-3"	297
* K2	10	4	STR	2'-5"	16
* S1	44	5	2	7'-4"	337
* S2	44	5	3	3'-5"	157
* S3	16	4	4	6'-6"	69
* T1	16	4	STR	2'-0"	21
* U1	37	4	5	3'-6"	87
* U2	9	4	5	5'-6"	33
* V1	74	5	STR	6'-5"	495
* V2	8	5	STR	8'-6"	71
* V3	8	5	STR	8'-5"	70

* EPOXY COATED REINFORCING STEEL 3,096 LBS.

CLASS AA CONCRETE BREAKDOWN :

POUR #1 - CAP	12.3 C.Y.
POUR #2 - BACKWALL	7.6 C.Y.
TOTAL	19.9 C.Y.

HP 12 x 53 STEEL PILES
NO. = 8 LIN. FEET = 480

PILE REDRIVES 8 EACH

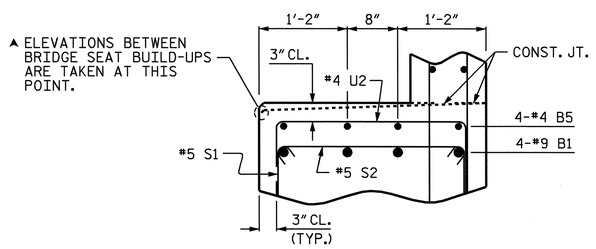

PARTIAL SECTION B-B

(TYP. UNDER GDR's #2, #3, & #4)

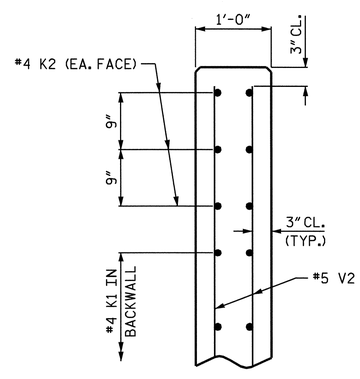

PARTIAL SECTION C-C

(LEFT SIDE SHOWN, RIGHT SIDE SIMILAR)

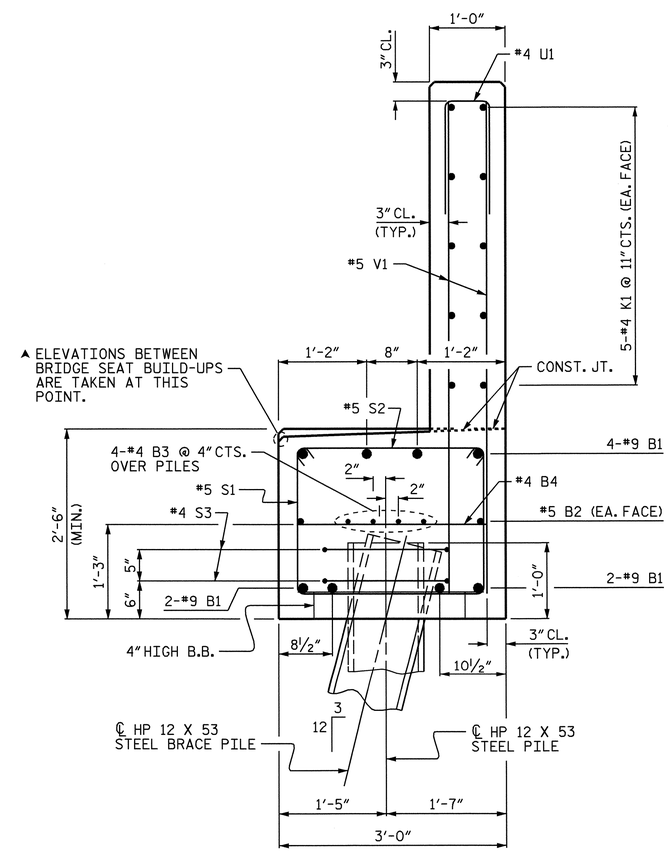

SECTION A-A

NORTH CAROLINA PROFESSIONAL SEAL 21638 ENGINEER LAURA E. SUTTON
11/30/06

PROJECT NO. B-2532
CRAVEN COUNTY
STATION: 31+21.29 -L-

SHEET 2 OF 2

STATE OF NORTH CAROLINA
DEPARTMENT OF TRANSPORTATION
RALEIGH

SUBSTRUCTURE

END BENT 2

REVISIONS						SHEET NO.
NO.	BY:	DATE:	NO.	BY:	DATE:	S-116
1			3			TOTAL SHEETS
2			4			348

DRAWN BY : P.C. BREWER DATE : 5/3/06
CHECKED BY : B.L. GREEN DATE : 5/06

24-OCT-2006 14:38
r:\Structures\pbrewer\Microstation\B2532_sd_EB_01.dgn
LSUTTON

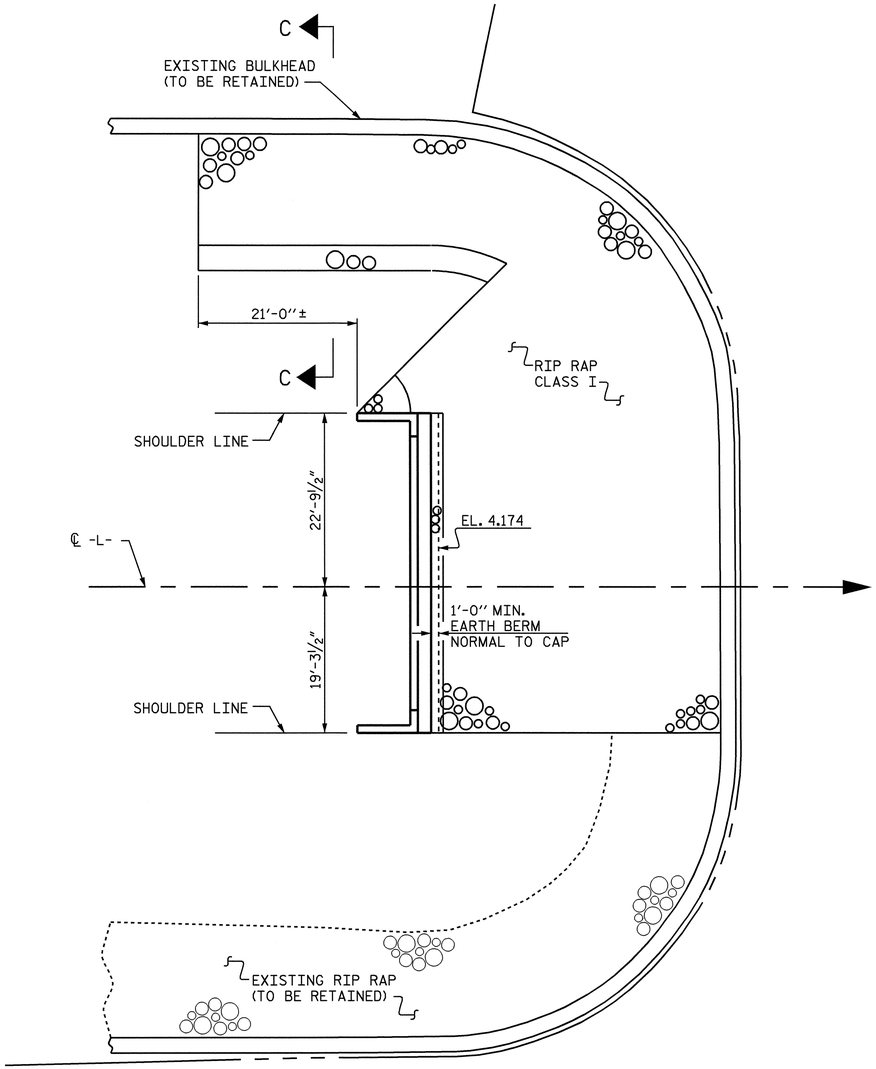

BERM RIP RAPPED
(END BENT 1)

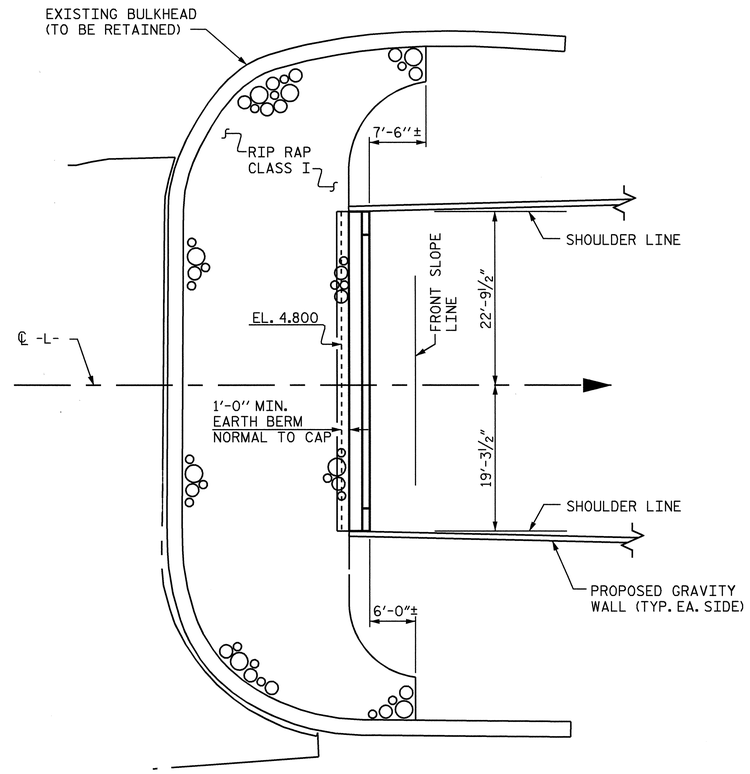

BERM RIP RAPPED
(END BENT 2)

ESTIMATED QUANTITIES		
BRIDGE @ STA. 31+21.29 -L-	RIP RAP CLASS I	FILTER FABRIC FOR DRAINAGE
	TONS	SQUARE YARDS
END BENT 1	320	355
END BENT 2	185	205

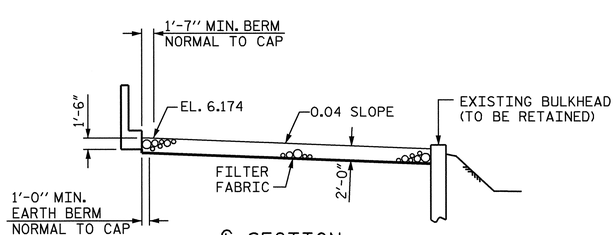

℄ SECTION
BERM RIP RAPPED
(END BENT 1)

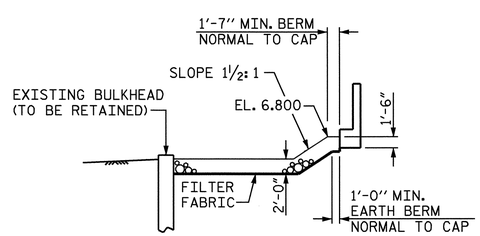

℄ SECTION
BERM RIP RAPPED
(END BENT 2)

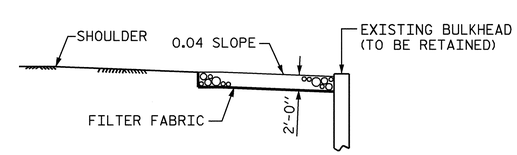

SECTION C-C
(SHOULDER SIMILAR
AT END BENT 2)

PROJECT NO. B-2532
CRAVEN COUNTY
STATION: 31+21.29 -L-

STATE OF NORTH CAROLINA
DEPARTMENT OF TRANSPORTATION
RALEIGH

RIP RAP DETAILS

NORTH CAROLINA PROFESSIONAL SEAL 21638 ENGINEER LAURA E. SUTTON
11/30/06

REVISIONS							SHEET NO.
NO.	BY:	DATE:	NO.	BY:	DATE:		S-111
1			3				TOTAL SHEETS
2			4				348

DRAWN BY : A.S. CALLAWAY DATE : 11/22/05
CHECKED BY : P.C. BREWER DATE : 1/3/06

30-NOV-2006 11:33
R:\Structures\scallaway\B2532_sd_RR_01.dgn
lsutton

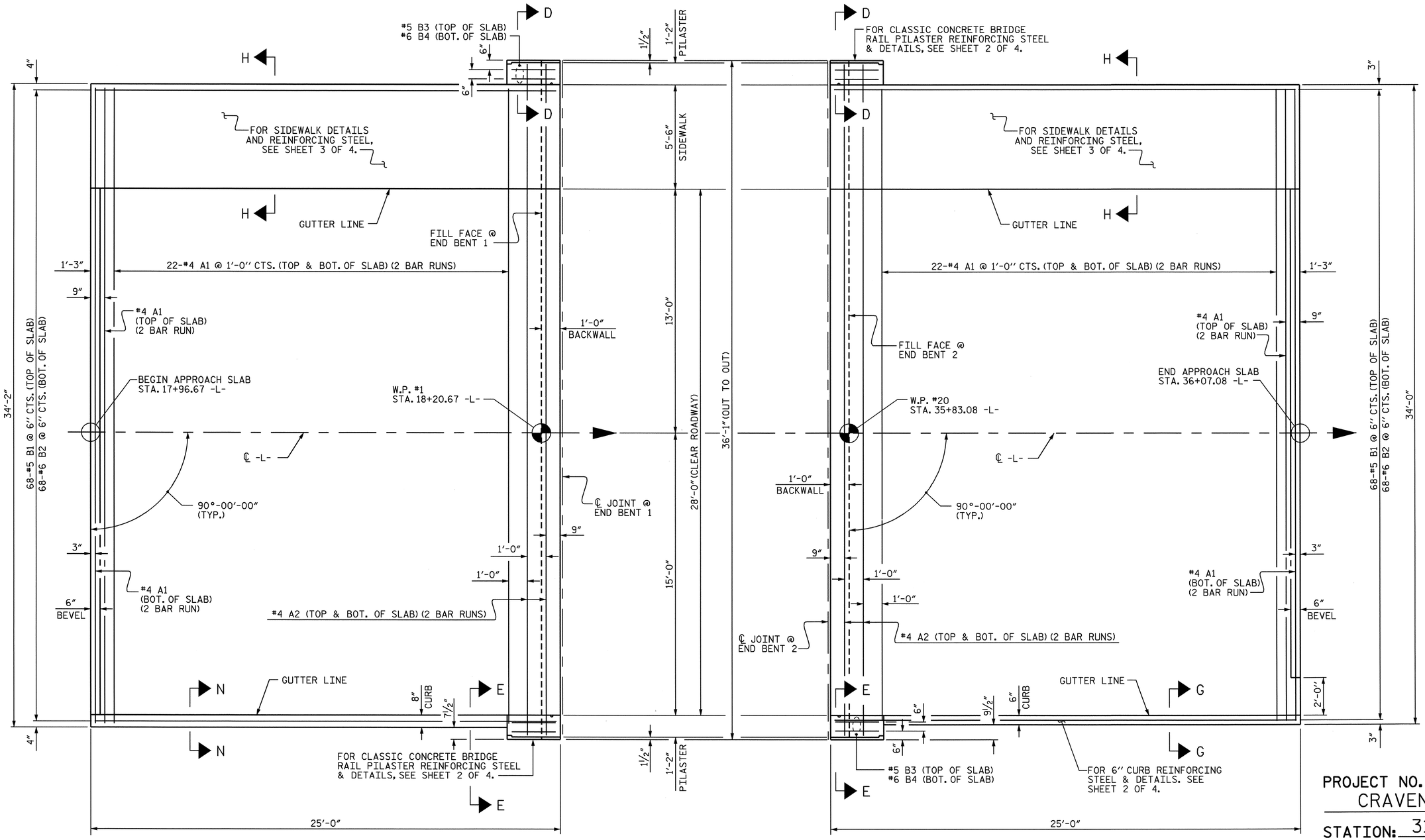

AT END BENT 1

AT END BENT 2

PLAN OF APPROACH SLAB

PROJECT NO. B-2532

CRAVEN COUNTY

STATION: 31+21.29 -L-

SHEET 1 OF 4

STATE OF NORTH CAROLINA
DEPARTMENT OF TRANSPORTATION
RALEIGH

BRIDGE APPROACH SLAB FOR FLEXIBLE PAVEMENT

NORTH CAROLINA PROFESSIONAL SEAL 21638 ENGINEER LAURA E. SUTTON
11/20/06

REVISIONS						SHEET NO.
NO.	BY:	DATE:	NO.	BY:	DATE:	S-112
1			3			TOTAL SHEETS
2			4			348

DRAWN BY : A.S. CALLAWAY DATE : 8/18/06
CHECKED BY : P.C. BREWER DATE : 8/29/06

24-OCT-2006 14:38
R:\Structures\scallaway\B2532_sd_AS_01.dgn
LSUTTON

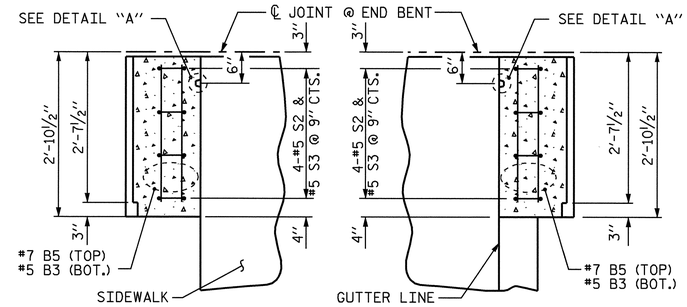

PLAN

(END BENT 1 SHOWN, END BENT 2 SIMILAR)

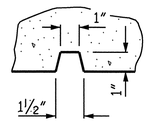

DETAIL "A"

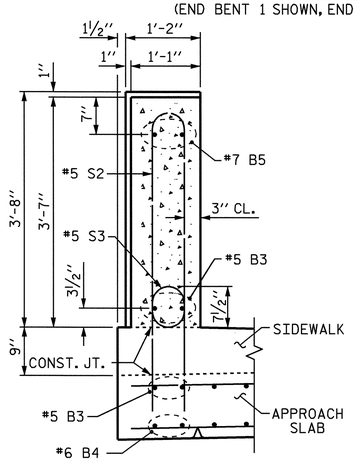

SECTION D-D

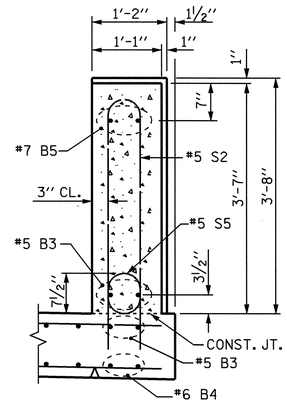

SECTION E-E

RAIL DETAILS

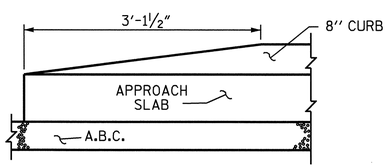

END OF CURB

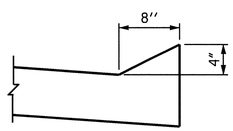

SECTION N-N

END BENT 1

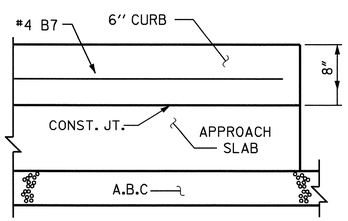

END OF CURB

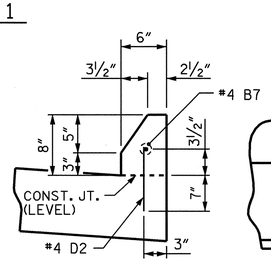

SECTION G-G

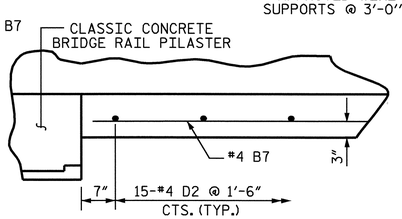

PARTIAL PLAN

END BENT 2

CURB DETAILS

NOTES

THE COST OF THE CLASSIC CONCRETE BRIDGE RAIL PILASTERS ON THE APPROACH SLAB SHALL BE INCLUDED IN THE LUMP SUM CONTRACT PRICE BID FOR BRIDGE APPROACH SLABS.

APPROACH SLAB SHALL NOT BE CONSTRUCTED PRIOR TO COMPLETION OF THE BRIDGE DECK.

FOR REINFORCED BRIDGE APPROACH FILL INCLUDING FABRIC, IMPERMEABLE GEOMEMBRANE, 4" Ø DRAINAGE PIPE, #78M STONE, AND SELECT MATERIAL, SEE ROADWAY PLANS.

TEMPORARY DRAINAGE AND TEMPORARY BERM AND SLOPE DRAINS WILL BE PAID FOR UNDER THE LUMP SUM PRICE FOR BRIDGE APPROACH SLAB.

AREA BETWEEN THE WINGWALL AND APPROACH SLAB SHALL BE GRADED TO DRAIN THE WATER AWAY FROM THE FILL FACE OF THE BRIDGE AND SHALL BE PAVED. SEE ROADWAY PLANS.

THE 6" COMP. A.B.C. SHALL EXTEND 10'-0" BEYOND THE END OF THE APPROACH SLAB AND 1'-0" OUTSIDE OF EACH EDGE OF SLAB.

THE CONTRACTOR MAY USE 4" TYPE B-25.0B ASPHALT CONCRETE BASE COURSE IN LIEU OF 6" COMP. A.B.C. IF THIS OPTION IS USED, THE BASE COURSE SHALL EXTEND 1'-0" BEYOND THE END OF THE APPROACH SLAB AND THE WIDTH SHALL BE THE SAME AS THAT OF THE APPROACH SLAB.

THE CONTRACTOR MAY USE 5" CLASS "A" CONCRETE BASE IN LIEU OF 6" COMP. A.B.C. IF THIS OPTION IS USED, THE CONCRETE BASE SHALL EXTEND 1'-0" BEYOND THE END OF THE APPROACH SLAB AND THE WIDTH SHALL BE THE SAME AS THAT OF THE APPROACH SLAB. THE CONCRETE SHALL BE FINISHED TO A SMOOTH SURFACE AND A LAYER OF 30 LB ROOFING FELT SHALL BE PLACED BETWEEN THE CONCRETE BASE AND THE APPROACH SLAB TO PREVENT BOND. THE APPROACH SLAB SHALL NOT BE CAST UNTIL THE CONCRETE BASE HAS REACHED AN AGE OF THREE CURING DAYS.

THE JOINT SHALL BE SAWED PRIOR TO THE CASTING OF THE SIDEWALK AND THE CLASSIC CONCRETE BRIDGE RAIL PILASTER.

THE #5 S3 AND #5 S5 BARS SHALL BE INSTALLED USING AN ADHESIVE ANCHORING SYSTEM AFTER SAWING THE JOINT. THE YEILD LOAD FOR THE #5 S3 AND #5 S5 BARS IS 18.6 KIPS. FIELD TESTING OF THE ADHESIVE BONDING SYSTEM IS NOT REQUIRED.

WITH EVAZOTE JOINT SEAL

FOR EVAZOTE JOINT SEALS, SEE SPECIAL PROVISIONS.

THE NOMINAL UNCOMPRESSED SEAL WIDTH OF THE EVAZOTE JOINT SEAL SHALL BE 3 7/16" AT END BENT 1 AND 2 13/16" AT END BENT 2.

FOR ELASTOMERIC CONCRETE, SEE SPECIAL PROVISIONS.

BAR TYPES

ALL BAR DIMENSIONS ARE OUT TO OUT

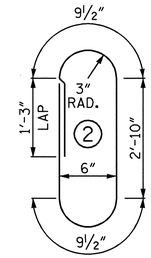

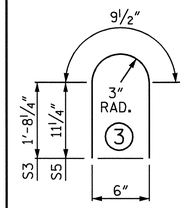

BILL OF MATERIAL

APPROACH SLAB-END BENT 1

BAR	NO.	SIZE	TYPE	LENGTH	WEIGHT
✳A1	92	#4	STR	17'-11"	1101
✳A2	8	#4	STR	18'-11"	101
✳B1	68	#5	STR	24'-1"	1708
✳B2	68	#6	STR	24'-7"	2511
✳B3	8	#5	STR	2'-5"	20
✳B4	4	#6	STR	2'-5"	15
✳B5	4	#7	STR	2'-5"	20
✳B6	4	#4	STR	24'-7"	66
✳D1	20	#4	STR	1'-0"	13
✳G1	25	#4	STR	5'-0"	84
✳S2	8	#5	2	8'-6"	71
✳S3	4	#5	3	4'-2"	17
✳S5	4	#5	3	2'-8"	11

✳EPOXY COATED REINFORCING STEEL LBS. 5738

CLASS AA CONCRETE BREAKDOWN:

POUR 1 SLAB & 8" CURB C.Y. 32.4
POUR 2 SIDEWALK & PILASTER C.Y. 4.1
CLASS AA CONCRETE C.Y. 36.5

APPROACH SLAB-END BENT 2

BAR	NO.	SIZE	TYPE	LENGTH	WEIGHT
✳A1	92	#4	STR	17'-11"	1101
✳A2	8	#4	STR	18'-11"	101
✳B1	68	#5	STR	24'-1"	1708
✳B2	68	#6	STR	24'-7"	2511
✳B3	8	#5	STR	2'-5"	20
✳B4	4	#6	STR	2'-5"	15
✳B5	4	#7	STR	2'-5"	20
✳B6	4	#4	STR	24'-7"	66
✳B7	1	#4	STR	21'-10"	14
✳D1	20	#4	STR	1'-0"	13
✳D2	15	#4	STR	11"	9
✳G1	25	#4	STR	5'-0"	84
✳S2	8	#5	2	8'-6"	71
✳S3	4	#5	3	4'-2"	17
✳S5	4	#5	3	2'-8"	11

✳EPOXY COATED REINFORCING STEEL LBS. 5761

CLASS AA CONCRETE BREAKDOWN:

POUR 1 SLAB C.Y. 32.2
POUR 2 6" CURB, SIDEWALK & PILASTER C.Y. 4.3
CLASS AA CONCRETE C.Y. 36.5

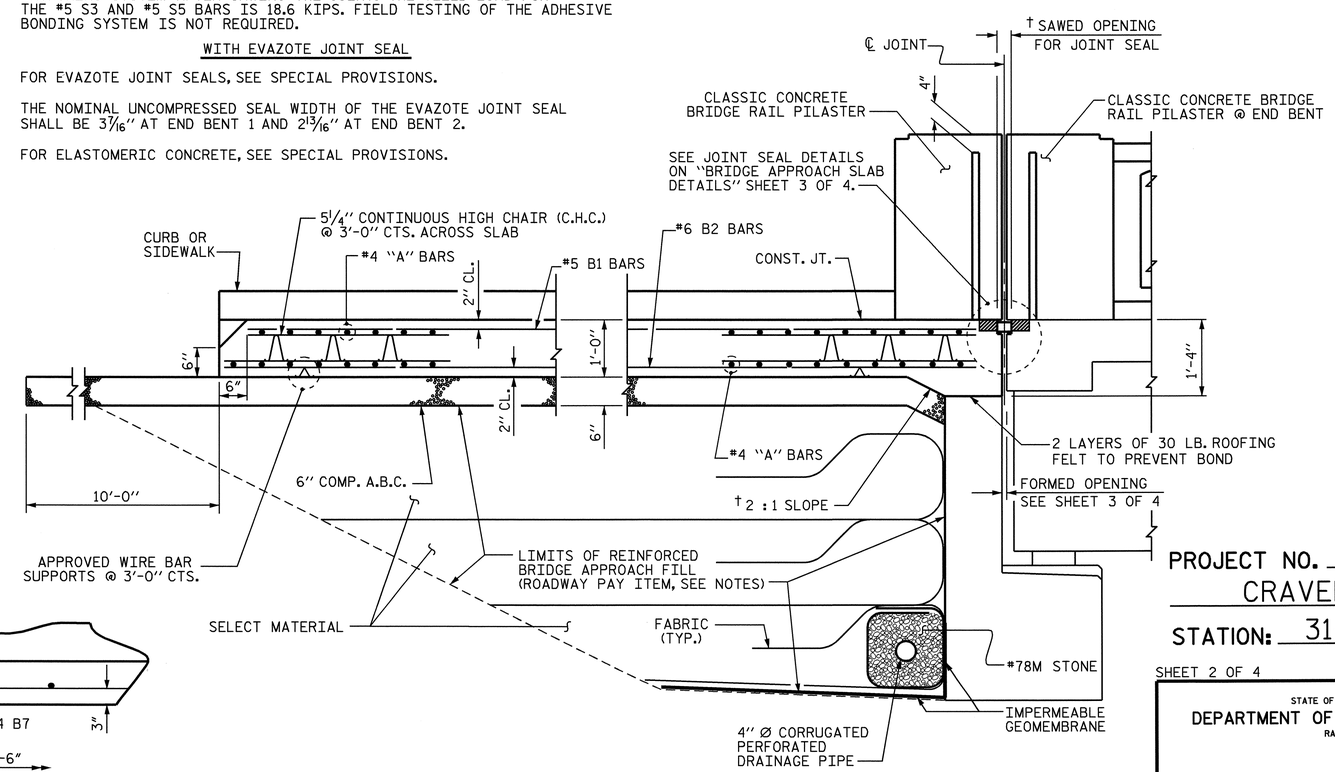

SECTION THRU SLAB

† NORMAL TO END BENT

NORTH CAROLINA PROFESSIONAL SEAL 21638 ENGINEER LAURA E. SUTTON
11/30/06

PROJECT NO. B-2532
CRAVEN COUNTY
STATION: 31+21.29 -L-

SHEET 2 OF 4

STATE OF NORTH CAROLINA
DEPARTMENT OF TRANSPORTATION
RALEIGH

BRIDGE APPROACH SLAB FOR FLEXIBLE PAVEMENT

REVISIONS						SHEET NO.
NO.	BY:	DATE:	NO.	BY:	DATE:	S-113
1			3			TOTAL SHEETS
2			4			348

DRAWN BY : A.S. CALLAWAY DATE : 8/17/06
CHECKED BY : P.C. BREWER DATE : 8/29/06

25-OCT-2006 12:30
R:\Structures\scallaway\B2532_sd_AS_01.dgn
lsutton

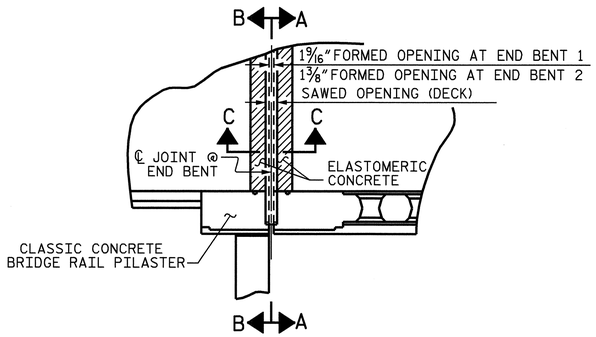

PLAN OF RIGHT SIDE

(END BENT 1 SHOWN, END BENT 2 SIMILAR)

ELASTOMERIC CONCRETE	
END BENT NO.	ELASTOMERIC CONCRETE ✱ (CU. FT.)
1	4.8
2	4.8
TOTAL	9.6

✱ BASED ON THE MINIMUM BLOCKOUT SHOWN.

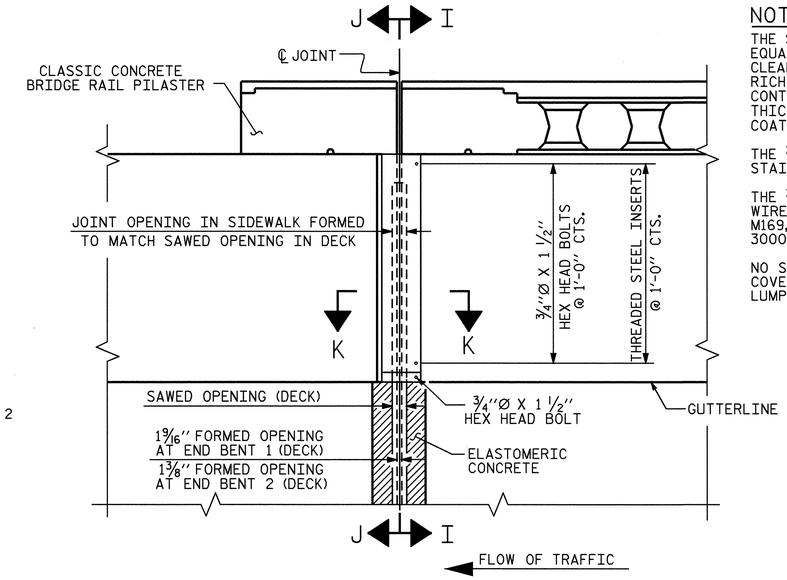

PLAN OF LEFT SIDE

(END BENT 1 SHOWN, END BENT 2 SIMILAR)

NOTES:

THE STEEL PLATES SHALL CONFORM TO AASHTO M270 GRADE 36 OR APPROVED EQUAL. AFTER FABRICATION, THE PLATES SHALL BE COMMERCIALLY BLAST CLEANED AND COATED WITH A MINIMUM THICKNESS OF 4 MILS (DRY) OF ZINC RICH PAINT IN ACCORDANCE WITH THE STANDARD SPECIFICATIONS. AT THE CONTRACTORS OPTION, THESE SURFACES MAY BE METALLIZED TO A MINIMUM THICKNESS OF 6 MILS. SEE SPECIAL PROVISIONS FOR THERMAL SPRAYED COATINGS (METALLIZATION).

THE 3/4" DIAMETER HEX HEAD BOLTS SHALL CONFORM TO ASTM F593 ALLOY 304 STAINLESS STEEL.

THE 3/4" CONCRETE INSERTS SHALL BE CLOSED-END FERRULES WITH LOOPED WIRE STRUTS ATTACHED TO THEM. THE INSERTS SHALL CONFORM TO AASHTO M169, GRADE 12L14 AND SHALL HAVE A TENSILE WORKING LOAD CAPACITY OF 3000 LBS.

NO SEPARATE PAYMENT WILL BE MADE FOR FURNISHING AND INSTALLING THE COVER PLATE. THE ENTIRE COST OF THIS WORK SHALL BE INCLUDED IN THE LUMP SUM PRICE FOR "EVAZOTE JOINT SEALS".

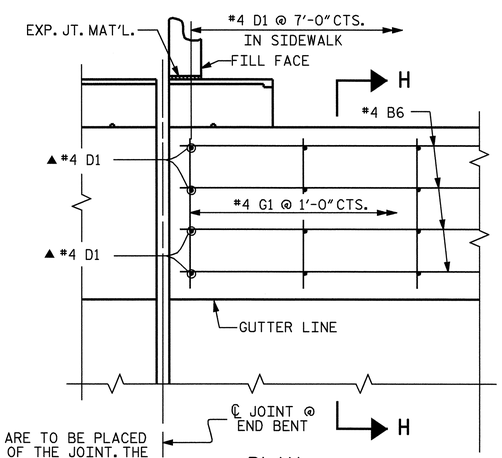

▲ THESE DOWELS ARE TO BE PLACED AFTER SAWING OF THE JOINT. THE HOLES SHALL BE DRILLED AND THE DOWELS GROUTED IN PLACE.

PLAN

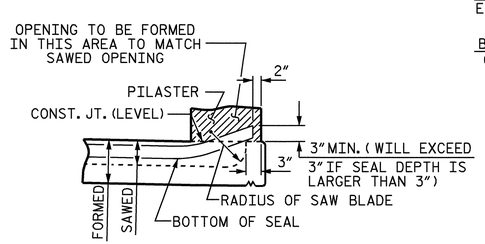

SECTION A-A

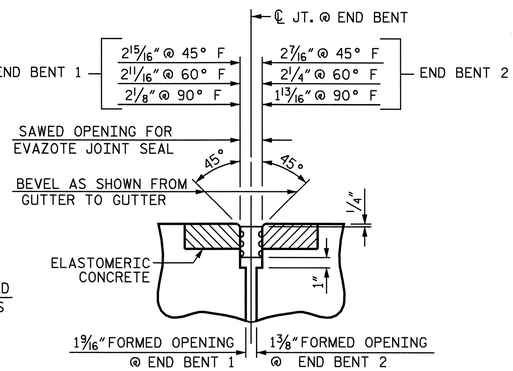

SECTION C-C

EVAZOTE JOINT SEAL

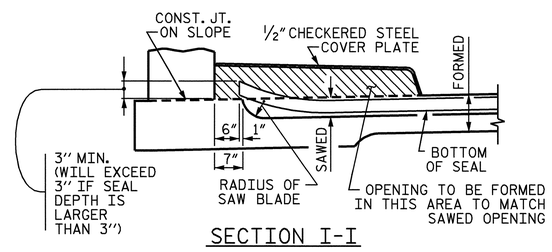

SECTION I-I

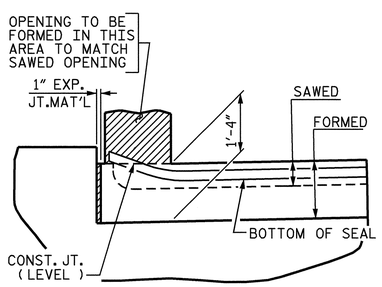

SECTION B-B

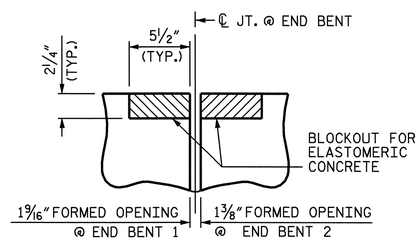

SECTION C-C

EVAZOTE JOINT SEAL (PRE-SAWED ELASTOMERIC CONCRETE DIMENSIONS)

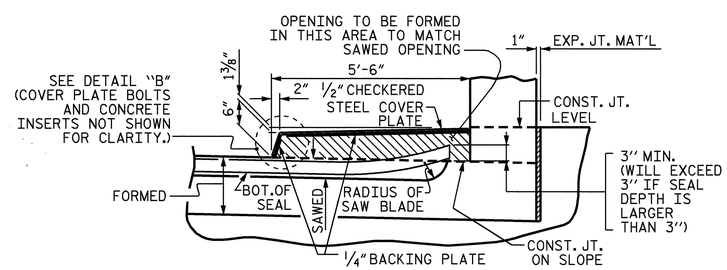

SECTION J-J

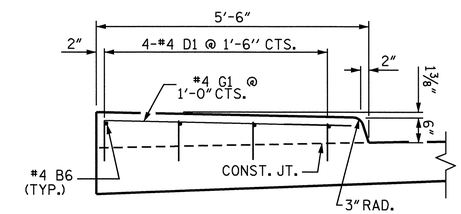

SECTION H-H

SIDEWALK DETAILS

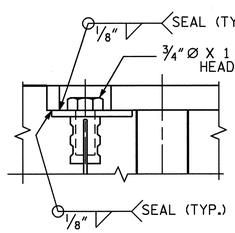

DETAIL "A"

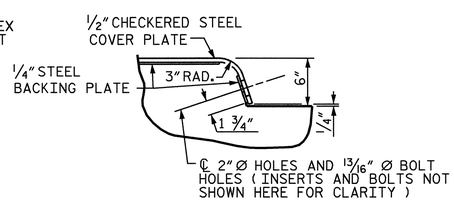

DETAIL "B"

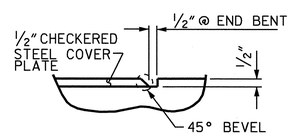

DETAIL "C"

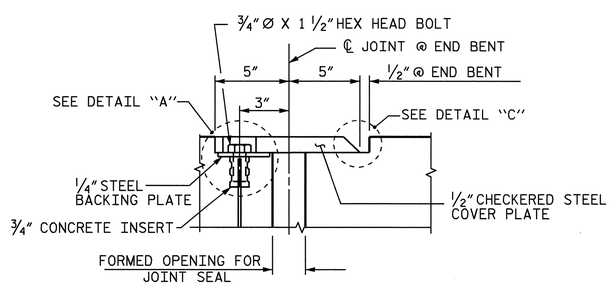

SECTION K-K

JOINT SEAL DETAILS @ END BENT

PROJECT NO. B-2532

CRAVEN COUNTY

STATION: 31+21.29 -L-

SHEET 3 OF 4

STATE OF NORTH CAROLINA
DEPARTMENT OF TRANSPORTATION
RALEIGH

BRIDGE APPROACH SLAB DETAILS

NORTH CAROLINA PROFESSIONAL SEAL 21638 ENGINEER LAURA E. SUTTON 11/30/06

REVISIONS						1988
NO.	BY:	DATE:	NO.	BY:	DATE:	SHEET NO. S-14
1			3			TOTAL SHEETS 348
2			4			

DRAWN BY : A.S. CALLAWAY DATE : 8/17/06
CHECKED BY : P.C. BREWER DATE : 8/29/06

30-NOV-2006 11:33
R:\Structures\scallaway\B2532_sd_AS_01.dgn
lsutton

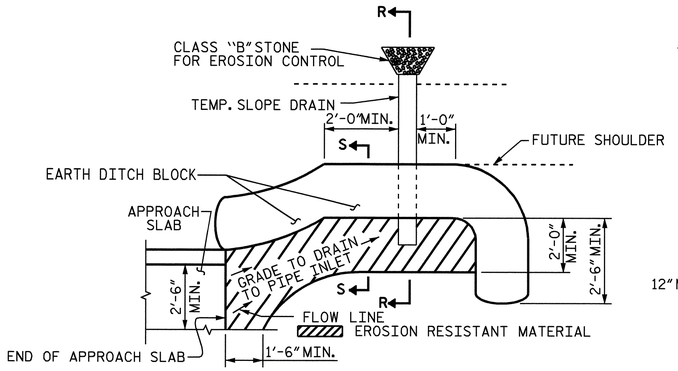

NOTE: IMMEDIATELY AFTER THE CONSTRUCTION OF THE APPROACH SLAB, THE CONTRACTOR SHALL PROVIDE TEMPORARY BERM AND SLOPE DRAIN. CONTRACTOR SHALL GRADE TO PIPE INLET AND PROVIDE EROSION RESISTANT MATERIAL AS SHOWN. THE EROSION RESISTANT MATERIAL SHALL BE EITHER 1) ASPHALT PLANT MIX, TYPE 1 OR TYPE 2, MIN. 2" DEPTH, 2) EROSION CONTROL MAT, OR 3) CONCRETE, AS DIRECTED BY THE ENGINEER. THE SLOPE DRAIN SHALL CONSIST OF A NON-PERFORATED TEMPORARY DRAINAGE PIPE, 12 INCHES IN DIAMETER.

PLAN VIEW

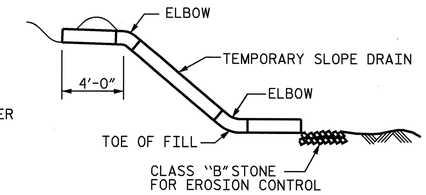

SECTION R-R

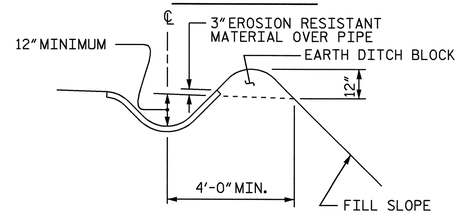

SECTION S-S

TEMPORARY BERM AND SLOPE DRAIN DETAILS

(TO BE USED WHEN SHOULDER BERM GUTTER IS REQUIRED)

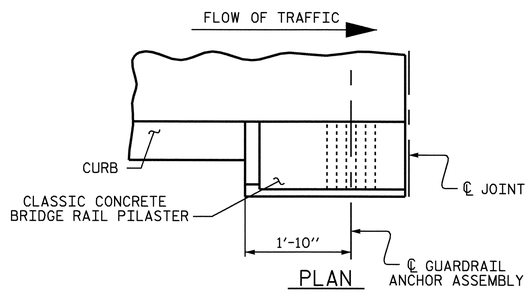

PLAN

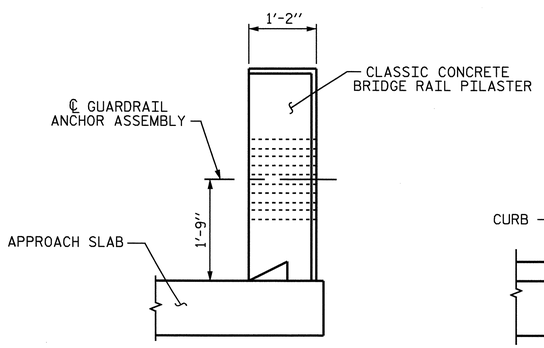

END VIEW

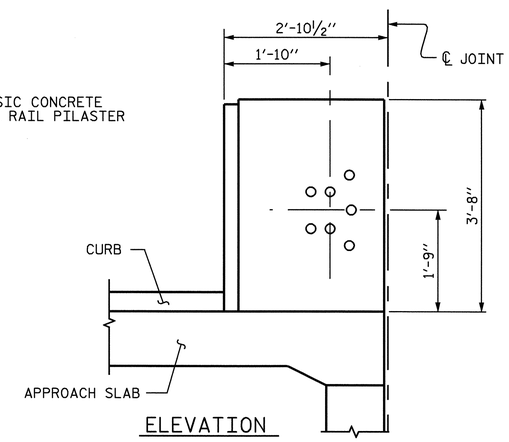

ELEVATION

LOCATION OF GUARDRAIL ANCHOR

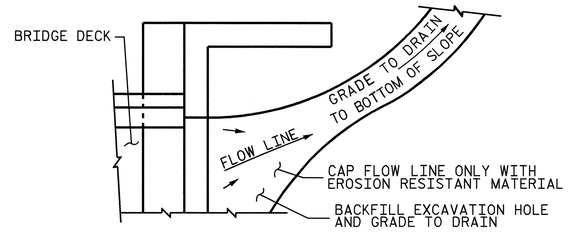

NOTE: IF THE APPROACH SLAB IS NOT CONSTRUCTED IMMEDIATELY AFTER THE BACKFILLING OF THE END BENT EXCAVATION, GRADE TO DRAIN TO THE BOTTOM OF THE SLOPE AND PROVIDE EROSION RESISTANT MATERIAL, SUCH AS FIBERGLASS ROVING OR AS DIRECTED BY THE ENGINEER TO PREVENT SOIL EROSION AND TO PROTECT THE AREA ADJACENT TO THE STRUCTURE. THE CONTRACTOR WILL BE REQUIRED TO REMOVE THESE MATERIALS PRIOR TO CONSTRUCTION OF THE APPROACH SLAB.

TEMPORARY DRAINAGE DETAIL

NOTES

THE GUARDRAIL ANCHOR ASSEMBLY SHALL CONSIST OF A 1/4" HOLD DOWN PLATE AND 7 - 7/8" Ø BOLTS WITH NUTS AND WASHERS.

THE HOLD-DOWN PLATE SHALL CONFORM TO AASHTO M270 GRADE 36. AFTER FABRICATION, THE HOLD-DOWN PLATE SHALL BE HOT-DIP GALVANIZED IN ACCORDANCE WITH AASHTO M111.

BOLTS SHALL CONFORM TO THE REQUIREMENTS OF ASTM A307 AND NUTS SHALL CONFORM TO THE REQUIREMENTS OF AASHTO M291. BOLTS, NUTS AND WASHERS SHALL BE GALVANIZED. AT THE CONTRACTOR'S OPTION, STAINLESS STEEL BOLTS, NUTS AND WASHERS MAY BE USED AS AN ALTERNATE FOR THE 7/8" Ø GALVANIZED BOLTS, NUTS AND WASHERS. THEY SHALL CONFORM TO OR EXCEED THE MECHANICAL REQUIREMENTS OF ASTM A307. THE USE OF THIS ALTERNATE SHALL BE APPROVED BY THE ENGINEER.

AFTER INSTALLATION, THE EXPOSED THREAD OF THE BOLT SHALL BE BURRED WITH A SHARP POINTED TOOL.

THE COST OF THE GUARDRAIL ANCHOR ASSEMBLIES WITH BOLTS, NUTS AND WASHERS COMPLETE IN PLACE, SHALL BE INCLUDED IN THE VARIOUS PAY ITEMS.

THE VERTICAL REINFORCING BARS MAY BE SHIFTED SLIGHTLY IN THE END POST TO CLEAR ASSEMBLY BOLTS.

THE 1 1/4" Ø HOLES SHALL BE FORMED OR DRILLED WITH A CORE BIT. IMPACT TOOLS WILL NOT BE PERMITTED. ANY CONCRETE DAMAGED BY THIS WORK SHALL BE REPAIRED TO THE SATISFACTION OF THE ENGINEER.

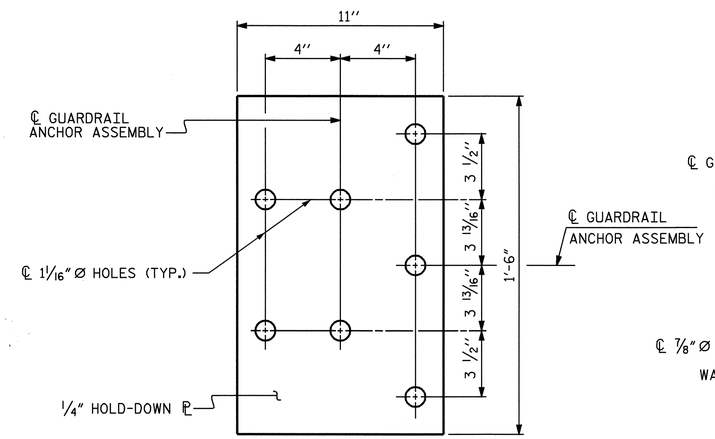

PLAN

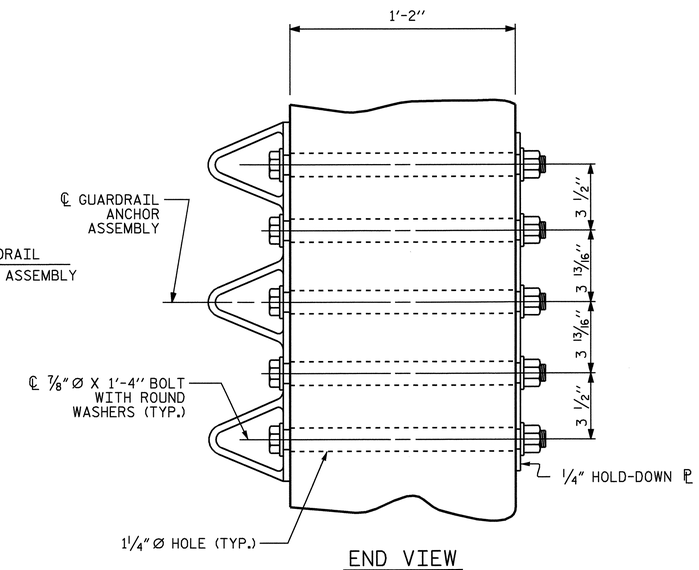

END VIEW

GUARDRAIL ANCHOR ASSEMBLY DETAILS

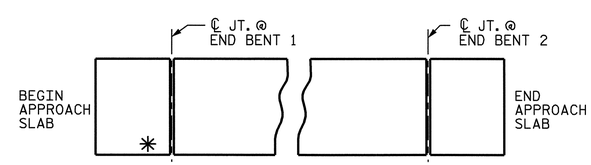

SKETCH SHOWING POINTS OF ATTACHMENT

*LOCATION OF GUARDRAIL ATTACHMENT

PROJECT NO. B-2532

CRAVEN COUNTY

STATION: 31+21.29 -L-

SHEET 4 OF 4

STATE OF NORTH CAROLINA
DEPARTMENT OF TRANSPORTATION
RALEIGH

BRIDGE APPROACH SLAB DETAILS

NORTH CAROLINA PROFESSIONAL SEAL 21638 ENGINEER LAURA E. SUTTON 11/30/06

REVISIONS						SHEET NO.
NO.	BY:	DATE:	NO.	BY:	DATE:	S-115
1			3			TOTAL SHEETS
2			4			348

DRAWN BY : A.S. CALLAWAY DATE : 8/17/06
CHECKED BY : P.C. BREWER DATE : 8/29/06

24-OCT-2006 14:38
R:\Structures\scallaway\B2532_sd_AS_01.dgn
LSUTTON

OVERHANG BRACKET CALCULATION INSTRUCTIONS

AASHTO SHAPES - TYPES III, IV, V, AND VI

1. RECORD KNOWN INFORMATION ON "BRIDGE OVERHANG BRACKET SUMMARY" ON SHEET 2
2. CALCULATE THE MAXIMUM SCREED LOAD PER BRACKET (SLPB) WITH AN ESTIMATED R = 1.5. SLPB = R X W. ROUND VALUE UP TO NEAREST SLPB VALUE INDICATED ON APPROPRIATE TABLE 1-1, 1-2, 1-3, OR 1-4.
3. WITH THE ESTIMATED SLPB, OVERHANG SLAB THICKNESS, "K" VALUE, AND 45° HANGER SAFE WORKING LOAD (SWL), ENTER THE APPROPRIATE TABLE 1-1, 1-2, 1-3, OR 1-4 (BASED ON OVERHANG DIMENSION) AND DETERMINE THE BRACKET SPACING, S.
4. CALCULATE S/D1 AND S/D2, ROUNDING UP TO NEAREST VALUE IN TABLE 2. ENTER TABLE 2 AND DETERMINE R VALUE.
5. CALCULATE REVISED SLPB. ROUND VALUE UP TO NEAREST SLPB VALUE INDICATED ON APPROPRIATE TABLE 1-1, 1-2, 1-3, OR 1-4.
6. WITH THE REVISED SLPB, OVERHANG SLAB THICKNESS, "K" VALUE AND 45 HANGER SAFE WORKING LOAD (SWL), ENTER THE APPROPRIATE TABLE 1-1, 1-2, 1-3 OR 1-4 (BASED ON OVERHANG DIMENSION) AND DETERMINE REVISED BRACKET SPACING, S.
7. CONTINUE ITERATIONS OF STEPS 4-6 UNTIL THE REVISED BRACKET SPACING, S, IS THE SAME AS THE PREVIOUS S VALUE.
8. CHECK LUMBER JOIST SPACING: WITH BRACKET SPACING VALUE, S, ROUND THIS VALUE UP TO THE NEAREST VALUE OF ALLOWABLE SPAN LENGTH OF JOIST OF TABLE 3. USING THIS VALUE, ALONG WITH THE AVERAGE OVERHANG SLAB THICKNESS AND THE LUMBER JOIST SIZE, DETERMINE JOIST SPACING FROM TABLE 3. IF NECESSARY, ADJUST LUMBER JOIST SIZE AND/OR JOIST SPACING TO MEET ALLOWABLE SPAN LENGTH OF JOIST.
9. CONVERSELY, IF THE DESIRED JOIST SPACING IS KNOWN, USE THIS ALONG WITH THE AVERAGE OVERHANG SLAB THICKNESS AND THE LUMBER JOIST SIZE TO DETERMINE IF ALLOWABLE SPAN LENGTH OF JOIST IS GREATER THAN THE BRACKET SPACING, S. IF NECESSARY, ADJUST LUMBER JOIST SIZE TO MEET REQUIREMENTS OF ALLOWABLE SPAN LENGTH OF JOIST AND JOIST SPACING.
10. RECORD REMAINING INFORMATION ON "BRIDGE OVERHANG BRACKET SUMMARY" FORM.
11. SUBMIT FORM AND CALCULATIONS FOR REVIEW AND APPROVAL.

TABLE 1-1

(FOR USE ON **UP TO 2'-0" OVERHANG** Ⓛ & 54" HORIZONTAL LEG LENGTH OF THE OVERHANG BRACKET)

AVG. SLAB THICKNESS Ⓣ (In)	BRACKET Ⓚ DIMENSION (In)	SCREED LOAD PER BRACKET									45° HANGER SWL (lbs)
		2500 lbs.	2250 lbs.	2000 lbs.	1750 lbs.	1500 lbs.	1250 lbs.	1000 lbs.	750 lbs.	0 lbs.	
		BRACKET SPACING									
10	30				2'-1"	2'-7"	3'-2"	3'-8"	4'-2"	5'-9"	4000
		3'-6"	4'-0"	4'-5"	4'-9"	5'-1"	5'-3"	5'-5"	5'-7"	6'-7"	6000
	40				2'-1"	2'-7"	3'-2"	3'-8"	4'-2"	5'-9"	4000
		3'-6"	4'-0"	4'-5"	4'-9"	5'-1"	5'-3"	5'-5"	5'-7"	6'-7"	6000
	50				2'-1"	2'-7"	3'-2"	3'-8"	4'-2"	5'-9"	4000
		3'-6"	4'-0"	4'-5"	4'-9"	5'-1"	5'-3"	5'-5"	5'-7"	6'-7"	6000
12	30					2'-4"	2'-10"	3'-4"	3'-9"	5'-2"	4000
		3'-2"	3'-7"	4'-1"	4'-7"	5'-0"	5'-2"	5'-4"	5'-7"	6'-5"	6000
	40					2'-4"	2'-10"	3'-4"	3'-9"	5'-2"	4000
		3'-2"	3'-7"	4'-1"	4'-7"	5'-0"	5'-2"	5'-4"	5'-7"	6'-5"	6000
	50					2'-4"	2'-10"	3'-4"	3'-9"	5'-2"	4000
		3'-2"	3'-7"	4'-1"	4'-7"	5'-0"	5'-2"	5'-4"	5'-7"	6'-5"	6000
14	30					2'-2"	2'-7"	3'-0"	3'-5"	4'-9"	4000
		2'-10"	3'-4"	3'-9"	4'-2"	4'-7"	5'-0"	5'-4"	5'-7"	6'-4"	6000
	40					2'-2"	2'-7"	3'-0"	3'-5"	4'-9"	4000
		2'-10"	3'-4"	3'-9"	4'-2"	4'-7"	5'-0"	5'-4"	5'-7"	6'-4"	6000
	50					2'-2"	2'-7"	3'-0"	3'-5"	4'-9"	4000
		2'-10"	3'-4"	3'-9"	4'-2"	4'-7"	5'-0"	5'-4"	5'-7"	6'-4"	6000
16	30					2'-0"	2'-4"	2'-9"	3'-2"	4'-4"	4000
		2'-8"	3'-0"	3'-5"	3'-10"	4'-3"	4'-7"	5'-0"	5'-5"	6'-3"	6000
	40					2'-0"	2'-4"	2'-9"	3'-2"	4'-4"	4000
		2'-8"	3'-0"	3'-5"	3'-10"	4'-3"	4'-7"	5'-0"	5'-5"	6'-3"	6000
	50					2'-0"	2'-4"	2'-9"	3'-2"	4'-4"	4000
		2'-8"	3'-0"	3'-5"	3'-10"	4'-3"	4'-7"	5'-0"	5'-5"	6'-3"	6000

TABLE 1-2

(FOR USE ON **OVER 2'-0" TO 2'-6" OVERHANG** Ⓛ & 54" HORIZONTAL LEG LENGTH OF THE OVERHANG BRACKET)

AVG. SLAB THICKNESS Ⓣ (In)	BRACKET Ⓚ DIMENSION (In)	SCREED LOAD PER BRACKET									45° HANGER SWL (lbs)
		2500 lbs.	2250 lbs.	2000 lbs.	1750 lbs.	1500 lbs.	1250 lbs.	1000 lbs.	750 lbs.	0 lbs.	
		BRACKET SPACING									
10	30					2'-4"	2'-9"	3'-3"	3'-8"	5'-1"	4000
		3'-1"	3'-6"	4'-0"	4'-5"	4'-11"	5'-3"	5'-5"	5'-7"	6'-7"	6000
	40					2'-4"	2'-9"	3'-3"	3'-8"	5'-1"	4000
		3'-1"	3'-6"	4'-0"	4'-5"	4'-11"	5'-3"	5'-5"	5'-7"	6'-7"	6000
	50					2'-4"	2'-9"	3'-3"	3'-8"	5'-1"	4000
		3'-1"	3'-6"	4'-0"	4'-5"	4'-11"	5'-3"	5'-5"	5'-7"	6'-7"	6000
12	30					2'-1"	2'-6"	2'-11"	3'-4"	4'-6"	4000
		2'-9"	3'-2"	3'-7"	4'-0"	4'-5"	4'-10"	5'-3"	5'-7"	6'-5"	6000
	40					2'-1"	2'-6"	2'-11"	3'-4"	4'-6"	4000
		2'-9"	3'-2"	3'-7"	4'-0"	4'-5"	4'-10"	5'-3"	5'-7"	6'-5"	6000
	50					2'-1"	2'-6"	2'-11"	3'-4"	4'-6"	4000
		2'-9"	3'-2"	3'-7"	4'-0"	4'-5"	4'-10"	5'-3"	5'-7"	6'-5"	6000
14	30						2'-3"	2'-7"	3'-0"	4'-1"	4000
		2'-6"	2'-10"	3'-3"	3'-7"	4'-0"	4'-4"	4'-9"	5'-1"	6'-3"	6000
	40						2'-3"	2'-7"	3'-0"	4'-1"	4000
		2'-6"	2'-10"	3'-3"	3'-7"	4'-0"	4'-4"	4'-9"	5'-1"	6'-3"	6000
	50						2'-3"	2'-7"	3'-0"	4'-1"	4000
		2'-6"	2'-10"	3'-3"	3'-7"	4'-0"	4'-4"	4'-9"	5'-1"	6'-3"	6000
16	30						2'-1"	2'-5"	2'-9"	3'-9"	4000
		2'-3"	2'-7"	2'-11"	3'-4"	3'-8"	4'-0"	4'-4"	4'-8"	5'-8"	6000
	40						2'-1"	2'-5"	2'-9"	3'-9"	4000
		2'-3"	2'-7"	2'-11"	3'-4"	3'-8"	4'-0"	4'-4"	4'-8"	5'-8"	6000
	50						2'-1"	2'-5"	2'-9"	3'-9"	4000
		2'-3"	2'-7"	2'-11"	3'-4"	3'-8"	4'-0"	4'-4"	4'-8"	5'-8"	6000

TABLE 1-3

(FOR USE ON **OVER 2'-6" TO 3'-0" OVERHANG** Ⓛ & 54" HORIZONTAL LEG LENGTH OF THE OVERHANG BRACKET)

AVG. SLAB THICKNESS Ⓣ (In)	BRACKET Ⓚ DIMENSION (In)	SCREED LOAD PER BRACKET									45° HANGER SWL (lbs)
		2500 lbs.	2250 lbs.	2000 lbs.	1750 lbs.	1500 lbs.	1250 lbs.	1000 lbs.	750 lbs.	0 lbs.	
		BRACKET SPACING									
10	30					2'-1"	2'-6"	2'-11"	3'-4"	4'-6"	4000
						4'-5"	4'-10"	5'-3"	5'-7"	6'-7"	6000
	40					2'-1"	2'-6"	2'-11"	3'-4"	4'-6"	4000
		2'-9"	3'-2"	3'-7"	4'-0"	4'-5"	4'-10"	5'-3"	5'-7"	6'-7"	6000
	50					2'-1'	2'-6"	2'-11"	3'-4"	4'-6"	4000
		2'-9"	3'-2"	3'-7"	4'-0"	4'-5"	4'-10"	5'-3"	5'-7"	6'-7"	6000
12	30						2'-2"	2'-7"	2'-11"	4'-0"	4000
						3'-11"	4'-3"	4'-8"	5'-0"	6'-1"	6000
	40						2'-2"	2'-7"	2'-11"	4'-0"	4000
		2'-5"	2'-10"	3'-2"	3'-6"	3'-11"	4'-3"	4'-8"	5'-0"	6'-1"	6000
	50						2'-2"	2'-7"	2'-11"	4'-0"	4000
		2'-5"	2'-10"	3'-2"	3'-6"	3'-11"	4'-3"	4'-8"	5'-0"	6'-1"	6000
14	30						2'-0"	2'-4"	2-8"	3'-8"	4000
					3'-2"	3'-6"	3'-10"	4'-2"	4'-6"	5'-6"	6000
	40						2'-0"	2'-4"	2'-8"	3'-8"	4000
		2'-2"	2'-6"	2'-10"	3'-2"	3'-6"	3'-10"	4'-2"	4'-6"	5'-6"	6000
	50						2'-0"	2'-4"	2'-8"	3'-8"	4000
		2'-2"	2'-6"	2'-10"	3'-2"	3'-6"	3'-10"	4'-2"	4'-6"	5'-6"	6000
16	30							2'-1"	2'-5"	3'-4"	4000
					2'-11"	3'-2"	3'-6"	3'-10"	4'-1"	5'-0"	6000
	40							2'-1"	2'-5"	3'-4"	4000
		2'-0"	2'-4"	2'-7"	2'-11"	3'-2"	3'-6"	3'-10"	4'-1"	5'-0"	6000
	50							2'-1"	2'-5"	3'-4"	4000
		2'-0"	2'-4"	2'-7"	2'-11"	3'-2"	3'-6"	3'-10"	4'-1"	5'-0"	6000

TABLE 1-4

(FOR USE ON **OVER 3'-0" TO 3'-6" OVERHANG** Ⓛ & 54" HORIZONTAL LEG LENGTH OF THE OVERHANG BRACKET)

AVG. SLAB THICKNESS Ⓣ (In)	BRACKET Ⓚ DIMENSION (In)	SCREED LOAD PER BRACKET									45° HANGER SWL (lbs)
		2500 lbs.	2250 lbs.	2000 lbs.	1750 lbs.	1500 lbs.	1250 lbs.	1000 lbs.	750 lbs.	0 lbs.	
		BRACKET SPACING									
10	30						2'-1"	2'-5"	2'-9"	3'-10"	4000
						2'-3"	2'-11"	3'-7"	4'-3"	5'-9"	6000
	40						2'-1"	2'-5"	2'-9"	3'-10"	4000
				2'-4"	3'-0"	3'-7"	4'-1"	4'-5"	4'-9"	5'-9"	6000
	50						2'-1"	2'-5"	2'-9"	3'-10"	4000
		2'-4"	2'-8"	3'-0"	3'-4"	3'-8"	4'-1"	4'-5"	4'-9"	5'-9"	6000
12	30							2'-2"	2'-6"	3-5"	4000
						2'-1"	2'-8"	3'-4"	3'-11"	5'-2"	6000
	40							2'-2"	2'-6"	3'-5"	4000
				2'-2"	2'-9"	3'-4"	3'-7"	3'-11"	4'-3"	5'-2"	6000
	50							2'-2"	2'-6"	3'-5"	4000
		2'-1"	2'-4"	2'-8"	3'-0"	3'-4"	3'-7"	3'-11"	4'-3"	5'-2"	6000
14	30								2-3"	3'-1"	4000
						2'-0"	2'-6"	3'-1"	3'-8"	4'-8"	6000
	40								2'-3"	3'-1"	4000
				2'-0"	2'-7"	3'-0"	3'-3"	3'-6"	3'-10"	4'-8"	6000
	50								2'-3"	3'-1"	4000
			2'-2"	2'-5"	2'-8"	3'-0"	3'-3"	3'-6"	3'-10"	4'-8"	6000
16	30								2'-0"	2'-9"	4000
							2'-4"	2'-10"	3'-5"	4'-3"	6000
	40								2'-0"	2'-9"	4000
					2'-5"	2'-8"	2'-11"	3'-3"	3'-6"	4'-3"	6000
	50								2'-0"	2'-9"	4000
				2'-2"	2'-5"	2'-8"	2'-11"	3'-3"	3'-6"	4'-3"	6000

DEFINITIONS

SLPB = SCREED LOAD PER BRACKET (R x W)
R = SCREED LOAD FACTOR, OBTAINED FROM TABLE 2
W = WHEEL LOAD
S = BRACKET SPACING
T = AVERAGE SLAB THICKNESS
SWL = SAFE WORKING LOAD
K = DIMENSION DEFINED ON "BRIDGE OVERHANG BRACKET SUMMARY" ON SHEET 2
L = OVERHANG MEASURED FROM EDGE OF TOP FLANGE TO EDGE OF SUPERSTRUCTURE

PROJECT NO. B-2532
CRAVEN COUNTY
STATION: 31+21.29 -L-

SHEET 1 OF 3

STATE OF NORTH CAROLINA
DEPARTMENT OF TRANSPORTATION
RALEIGH

STANDARD OVERHANG FALSEWORK

AASHTO TYPES
III, IV, V, AND VI

NORTH CAROLINA PROFESSIONAL SEAL 18788 ENGINEER CHANG-CHUAN VICTOR CHAO

Chang-Chuan V. Chao
11-30-2006

REVISIONS						SHEET NO.
NO.	BY:	DATE:	NO.	BY:	DATE:	S-116
1			3			TOTAL SHEETS
2			4			348

ASSEMBLED BY:	DATE:
CHECKED BY:	DATE:
DRAWN BY: R. WRIGHT 06/04	REV.
CHECKED BY: C. V. CHAO 06/04	

26-SEP-2006 13:10
R:\Structures\lsutton\B2532_sd_of_01.dgn
LSUTTON

BRIDGE OVERHANG BRACKET SUMMARY

TOTAL SCREED WEIGHT = _____ LBS.
NUMBER OF SCREED WHEELS = _____
SCREED WHEEL LOAD (W) = _____ LBS.
SCREED LOAD PER BRACKET = _____ LBS.

PROJECT No. : _____
COUNTY : _____
STATION : _____
DESCRIPTION : _____

DATE : _____
DESIGN BY : _____
CHECK BY : _____

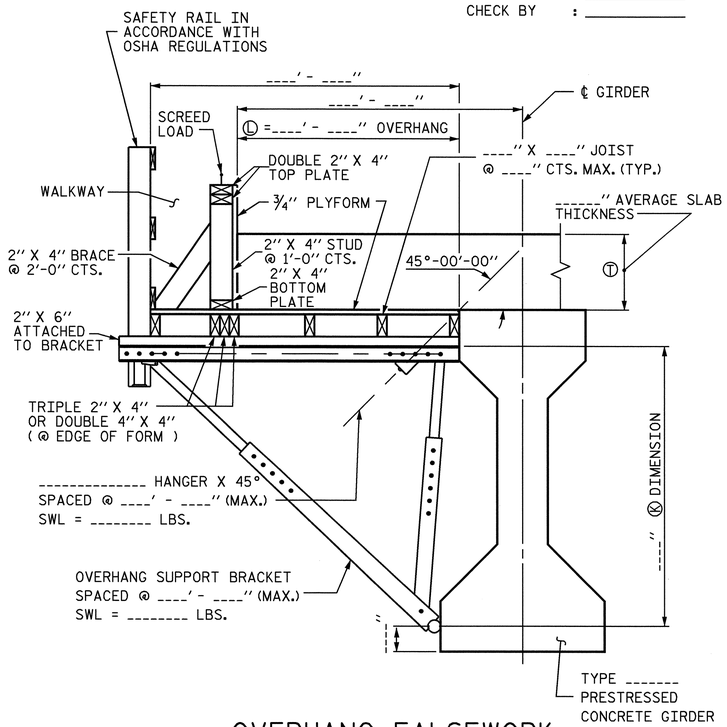

OVERHANG FALSEWORK

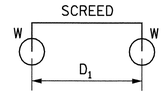

4-WHEEL MACHINE

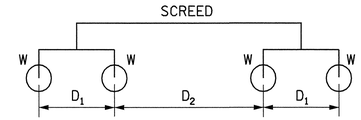

8-WHEEL MACHINE

4 WHEEL MACHINE	
S/D1	R
<= 1.0	1.00
1.1	1.09
1.2	1.17
1.3	1.23
1.4	1.29
1.5	1.33
1.6	1.38
1.7	1.41
1.8	1.44
1.9	1.47
2.0	1.50
2.2	1.55
2.4	1.58
2.6	1.62
2.8	1.64
3.0	1.67
3.5	1.71
4.0	1.75

TABLE 2: SCREED LOAD FACTOR "R"

	THE SCREED LOAD FACTOR R (FOR 8 WHEEL MACHINE)																		
	S/D_2																		
S/D_1	<= 1.0	1.1	1.2	1.3	1.4	1.5	1.6	1.7	1.8	1.9	2.0	2.2	2.4	2.6	2.8	3.0	3.5	4.0
<= 1.0	1.00	1.09	1.17	1.23	1.29	1.33	1.38	1.41	1.44	1.47	1.50	1.55	1.58	1.62	1.64	1.67	1.71	1.75
1.1	1.09	1.18	1.26	1.32	1.38	1.42	1.47	1.50	1.54	1.56	1.59	1.64	1.67	1.71	1.73	1.76	1.81	1.84
1.2	1.17	1.26	1.33	1.40	1.45	1.50	1.54	1.58	1.61	1.64	1.67	1.71	1.75	1.78	1.81	1.83	1.88	1.92
1.3	1.23	1.32	1.40	1.46	1.52	1.56	1.61	1.64	1.68	1.70	1.73	1.78	1.81	1.85	1.87	1.90	1.95	1.98
1.4	1.29	1.38	1.45	1.52	1.57	1.62	1.66	1.70	1.73	1.76	1.79	1.83	1.87	1.90	1.93	1.95	2.00	2.07
1.5	1.33	1.42	1.50	1.56	1.62	1.67	1.71	1.75	1.78	1.81	1.83	1.88	1.92	1.95	1.98	2.00	2.10	2.17
1.6	1.38	1.47	1.54	1.61	1.66	1.71	1.75	1.79	1.82	1.85	1.88	1.92	1.96	1.99	2.04	2.08	2.18	2.25
1.7	1.41	1.50	1.58	1.64	1.70	1.75	1.79	1.82	1.86	1.89	1.91	1.96	2.00	2.05	2.11	2.16	2.25	2.32
1.8	1.44	1.54	1.61	1.68	1.73	1.78	1.82	1.86	1.89	1.92	1.94	1.99	2.06	2.12	2.17	2.22	2.32	2.39
1.9	1.47	1.56	1.64	1.70	1.76	1.81	1.85	1.89	1.92	1.95	1.97	2.04	2.11	2.18	2.23	2.28	2.38	2.45
2.0	1.50	1.59	1.67	1.73	1.79	1.83	1.88	1.91	1.94	1.97	2.00	2.09	2.17	2.23	2.29	2.33	2.43	2.50
2.2	1.55	1.64	1.71	1.78	1.83	1.88	1.92	1.96	1.99	2.04	2.09	2.18	2.26	2.32	2.38	2.42	2.52	2.59
2.4	1.58	1.67	1.75	1.81	1.87	1.92	1.96	2.00	2.06	2.11	2.17	2.26	2.33	2.40	2.45	2.50	2.60	2.67
2.6	1.62	1.71	1.78	1.85	1.90	1.95	1.99	2.05	2.12	2.18	2.23	2.32	2.40	2.46	2.52	2.56	2.66	2.73
2.8	1.64	1.73	1.81	1.87	1.93	1.98	2.04	2.11	2.17	2.23	2.29	2.38	2.45	2.52	2.57	2.62	2.71	2.79
3.0	1.67	1.76	1.83	1.90	1.95	2.00	2.08	2.16	2.22	2.28	2.33	2.42	2.50	2.56	2.62	2.67	2.76	2.83
3.5	1.71	1.81	1.88	1.95	2.00	2.10	2.18	2.25	2.32	2.38	2.43	2.52	2.60	2.66	2.71	2.76	2.86	2.93
4.0	1.75	1.84	1.92	1.98	2.07	2.17	2.25	2.32	2.39	2.45	2.50	2.59	2.67	2.73	2.79	2.83	2.93	3.00

NOTES

DESIGN INCLUDES CONSTRUCTION LIVE LOAD 20 PSF ON THE AREA SUPPORTED AND 75 PLF AT THE OUTSIDE DECK OF OVERHANGS.

REQUIRED MINIMUM DIAGONAL LEG CAPACITY: 3600 LB WORKING LOAD

THE CONTRACTOR HAS THE OPTION OF SUBMITTING HIS OWN DESIGN FOR OVERHANG FALSEWORK IN ACCORDANCE WITH THE SPECIAL PROVISIONS.

SUBMITTALS UTILIZING THE INSTRUCTIONS AND PROCEDURES DESCRIBED ON SHEET 1 OF 3 SHALL BE IN ACCORDANCE WITH THE APPLICABLE SECTIONS OF THE SPECIFICATIONS AND SPECIAL PROVISIONS, EXCEPT THAT CALCULATIONS FOR OVERHANG FALSEWORK NEED NOT BE SEALED BY A REGISTERED ENGINEER.

FOR OVERHANG FALSEWORK BRACING DESIGN, SEE SHEET 3 OF 3.

TABLE 3: ALLOWABLE SPAN LENGTH OF JOISTS AND JOIST SPACINGS

AVG. SLAB THICKNESS Ⓣ (IN)	LUMBER JOIST SIZE (IN X IN)	JOIST SPACINGS			
		15 IN	12 IN	10 IN	8 IN
		THE ALLOWABLE SPAN LENGTH OF JOISTS			
10	2 X 4	———	4' - 6"	4' - 9"	5' - 0"
	4 X 4	5' - 9"	6' - 3"	6' - 6"	6' - 7"
12	2 X 4	———	4' - 3"	4' - 9"	5' - 0"
	4 X 4	5' - 3"	6' - 0"	6' - 3"	6' - 5"
14	2 X 4	———	4' - 0"	4' - 6"	5' - 0"
	4 X 4	———	5' - 6"	6' - 0"	6' - 4"
16	2 X 4	———	4' - 0"	4' - 3"	4' - 9"
	4 X 4	———	5' - 3"	5' - 9"	6' - 3"

PROJECT NO. B-2532
CRAVEN COUNTY
STATION: 31+21.29 -L-

SHEET 2 OF 3

STATE OF NORTH CAROLINA
DEPARTMENT OF TRANSPORTATION
RALEIGH

STANDARD OVERHANG FALSEWORK

AASHTO TYPES
III, IV, V, AND VI

NORTH CAROLINA PROFESSIONAL SEAL 18788 ENGINEER CHANG-CHUAN VICTOR CHAO
Chang-Chuan V. Chao
11-30-2006

REVISIONS						SHEET NO.
NO.	BY:	DATE:	NO.	BY:	DATE:	S-117
1			3			TOTAL SHEETS
2			4			348

ASSEMBLED BY:	DATE:
CHECKED BY:	DATE:
DRAWN BY: R. WRIGHT 06/04	REV.
CHECKED BY: C. V. CHAO 06/04	

26-SEP-2006 13:10
R:\Structures\lsutton\B2532_sd_of_01.dgn
LSUTTON

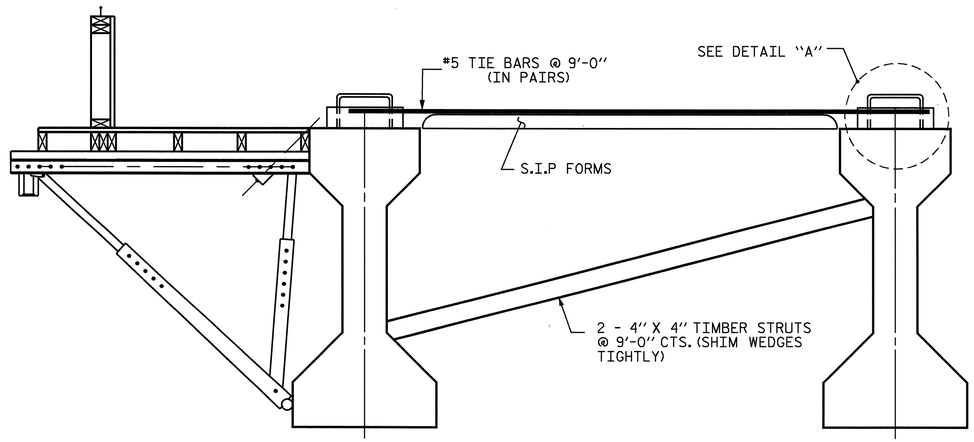

EXTERIOR GIRDER INTERIOR GIRDER

DETAIL OF REQUIRED OVERHANG FALSEWORK BRACING SYSTEM

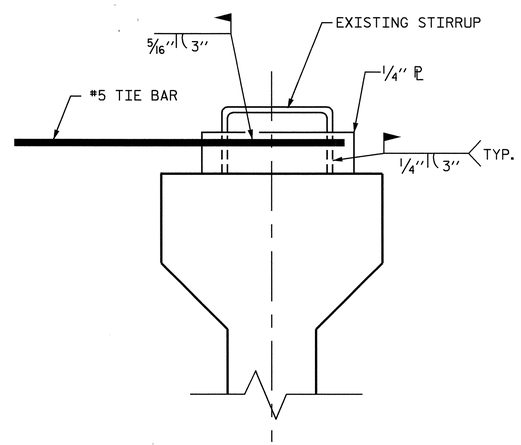

DETAIL "A"

NOTES:

EACH #5 TIE BAR SHALL BE WELDED TO ONE STIRRUP LOOP AS SHOWN IN DETAIL "A". #5 TIE BARS SHALL BE WELDED TO TWO ADJACENT STIRRUPS OF THE EXTERIOR GIRDER AND THE ADJACENT INTERIOR GIRDER BETWEEN PERMANENT DIAPHRAGMS. WELD STEEL PLATES IN BETWEEN THE TIE BARS AND THE STIRRUP LOOP. WELDING TWO TIE BARS TO THE SAME STIRRUP LOOP SHALL NOT BE PERMITTED.

MAXIMUM SPACING BETWEEN THE BRACING (TIE BARS-TIMBER STRUT) IS 9'-0" CTS. #5 TIE BARS SHALL BE LOCATED OVER A TIMBER STRUT.

INSTALL TIE BARS AND TIMBER STRUTS PRIOR TO PLACEMENT OF CONCRETE OR SCREED WEIGHT ONTO THE OVERHANG FALSEWORK.

PROJECT NO. B-2532
CRAVEN COUNTY
STATION: 31+21.29 -L-

SHEET 3 OF 3

STATE OF NORTH CAROLINA
DEPARTMENT OF TRANSPORTATION
RALEIGH

STANDARD OVERHANG FALSEWORK

AASHTO TYPES
III, IV, V, AND VI

NORTH CAROLINA PROFESSIONAL SEAL 18788 ENGINEER CHANG-CHUAN VICTOR CHAO

Chang-Chuan V. Chao
11-30-2006

REVISIONS						SHEET NO.
NO.	BY:	DATE:	NO.	BY:	DATE:	S-118
1			3			TOTAL SHEETS
2			4			348

DRAWN BY: R. WRIGHT 06/04 DATE : _____
CHECKED BY: C. V. CHAO 06/04 DATE : _____

26-SEP-2006 13:10
R:\Structures\lsutton\B2532_sd_of_01.dgn
LSUTTON

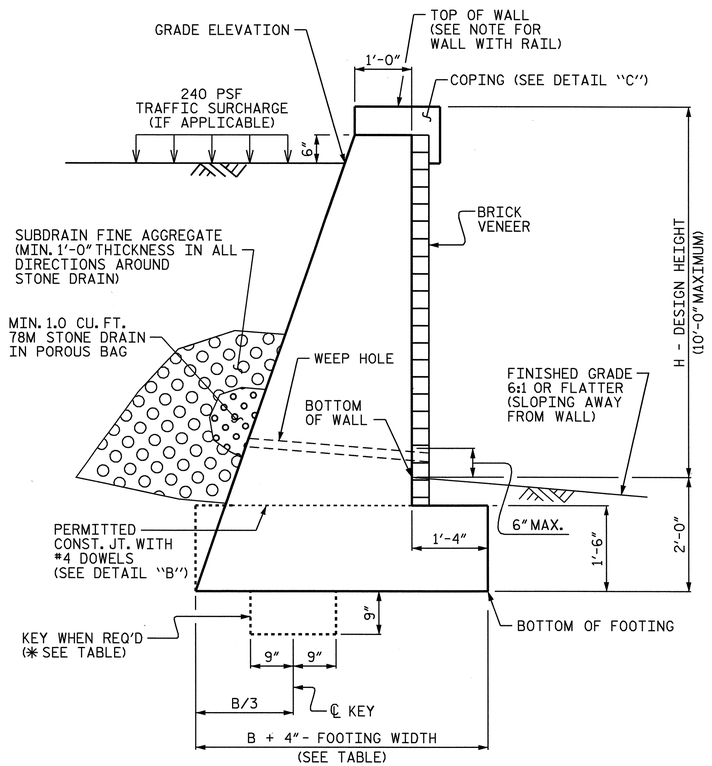

TYPICAL SECTION

NO SLOPE CONDITION

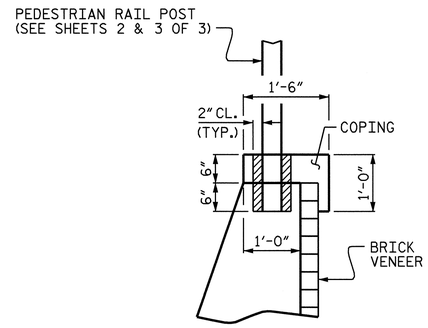

DETAIL "C"

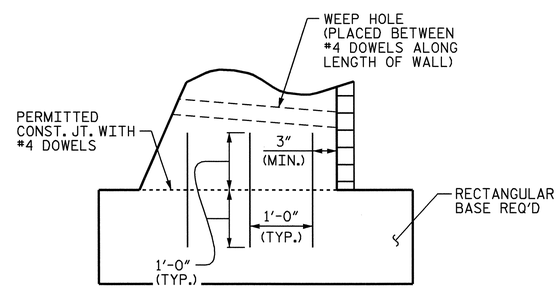

DETAIL "B"

H + 2 (ft)	< 6	6 - 9	> 9 - 12
NO SLOPE CONDITION WITH TRAFFIC SURCHARGE	.80	.75 ✱	.70 ✱

B/(H + 2) RATIO

✱ KEY IS REQUIRED FOR NO SLOPE CONDITION WITH TRAFFIC SURCHARGE WHEN H + 2ft IS 6'-0" OR GREATER.

NOTES:

FOR GRAVITY RETAINING WALLS, SEE SECTION 453 OF THE STANDARD SPECIFICATIONS.

THE STANDARD GRAVITY RETAINING WALL IS BASED ON THE FOLLOWING IN-SITU ASSUMED SOIL PARAMETERS:
TOTAL UNIT WEIGHT = 120 PCF
COHESION = 0 PSF
FRICTION ANGLE = 35 DEGREES
(GROUNDWATER WITHIN 5'-0" OF BOTTOM OF FOOTING)
FRICTION ANGLE = 30 DEGREES
(GROUNDWATER MORE THAN 5'-0" BELOW BOTTOM OF FOOTING)

DO NOT USE A STANDARD GRAVITY RETAINING WALL IF THE ASSUMED SOIL PARAMETERS ARE NOT APPLICABLE OR GROUNDWATER IS ABOVE THE BOTTOM OF FOOTING.

DO NOT USE A STANDARD GRAVITY RETAINING WALL WHEN VERY LOOSE OR SOFT SOIL OR MUCK IS PRESENT BELOW THE WALL.

DO NOT PLACE CONCRETE UNTIL OBTAINING APPROVAL OF THE EXCAVATION DEPTH AND CHECKING FOUNDATION MATERIAL FOR IN-SITU ASSUMED SOIL PARAMETERS.

USE CLASS "A" CONCRETE AND PROVIDE CLASS I SURFACE FINISH FOR ALL EXPOSED SURFACES.

PROVIDE 3" DIAMETER WEEP HOLES ON 10'-0" CENTERS ALONG WALL. SLOPE WEEP HOLES ON A 1" PER FOOT SLOPE THROUGH THE WALL SO THAT WATER DRAINS OUT OF THE FRONT OF THE WALL.

CONSTRUCT A HORIZONTAL DRAIN IN SUBDRAIN FINE AGGREGATE AT LEAST 1'-0" TALL AND 1'-0" WIDE TO CONNECT ALL STONE DRAINS.

THE CONTRACTOR SHALL PROVIDE FOR INSTALLATION OF THE 4" DIAMETER DRAIN PIPE THROUGH THE WALL AS REQUIRED FOR REINFORCED BRIDGE APPROACH FILLS, SEE THE ROADWAY PLANS.

PROVIDE GROOVED CONTRACTION JOINTS EVERY 10'-0" AND EXPANSION JOINTS EVERY 30'-0" ALONG THE WALL.

THE BRICK VENEER SHALL MATCH THE EXISTING BRICK ON THE ADJACENT NEW BERN CONVENTION CENTER. BRICK SHALL BE 'IRONSPOT COVENTRY - CLOSURE SIZE - RED" AS MANUFACTURED BY TRIANGLE BRICK. SUBMIT BRICK SAMPLES TO THE ENGINEER FOR APPROVAL BEFORE BEGINNING CONSTRUCTION.

ANCHOR BRICK VENEER TO CONCRETE RETAINING WALL WITH BRICK TO CONCRETE TYPE ANCHORS ACCORDING TO MANUFACTURER'S SPECIFICATIONS WITH A MINIMUM VERTICAL SPACING OF 1'-4" AND A MINIMUM HORIZONTAL SPACING OF 2'-8" WITH EACH ROW STAGGERED 1'-4" FROM THE ROW OF ANCHORS ABOVE AND BELOW.

DO NOT BACKFILL BEHIND WALL UNTIL CONCRETE DEVELOPS A MINIMUM COMPRESSIVE STRENGTH OF 3000 PSI . COMPACT BACKFILL IN ACCORDANCE WITH SUBARTICLE 235-4(C) OF THE STANDARD SPECIFICATIONS. PLACE BACKFILL WITHIN 3'-0" OF THE BACK OF THE WALL WITH HAND OPERATED EQUIPMENT. DO NOT OPERATE HEAVY EARTH MOVING EQUIPMENT WITHIN 10'-0" OF THE BACK OF WALL.

WHEN A CONSTRUCTION JOINT IS LOCATED AT THE BASE OF THE WALL, IN SECTION, PROVIDE A MINIMUM OF 3-#4 DOWELS AT AN EQUAL SPACING. SPACE ALL DOWELS AT 1'-6" CENTERS ALONG THE LENGTH OF THE WALL.

THE COST OF THE CONCRETE COPING AND BRICK VENEER SHALL BE INCLUDED IN THE SQUARE FOOT PRICE BID FOR "GRAVITY RETAINING WALL".

THE PEDESTRIAN RAILING SHALL MATCH THE EXISTING RAILING IN THE ADJACENT CITY OF NEW BERN PROPERTY. RAILING SHALL BE "CONTEMPORARY WITH RINGS" AS MANUFACTURED BY STERLING DULA. SUBMIT RAIL SAMPLES TO THE ENGINEER FOR APPROVAL BEFORE BEGINNING CONSTRUCTION.

USE SLEEVES IN ACCORDANCE WITH SECTION 866 OF THE STANDARD SPECIFICATIONS FOR RAIL POSTS, OR SUBMIT RAIL POST ANCHOR PLATE DETAILS. FILL SLEEVES WITH GROUT AFTER POSTS HAVE BEEN SET. ATTACH THE PEDESTRIAN RAILING TO THE CLASSIC CONCRETE RAIL PILASTER PER MANUFACTURER'S RECOMMENDATIONS.

FOR PEDESTRIAN RAILING, SEE SPECIAL PROVISIONS.

SEE FOLLOWING SHEETS FOR PLAN AND PROFILE VIEW (WALL ENVELOPES) AND PROPOSED ELEVATIONS FOR GRAVITY RETAINING WALLS.

PROJECT NO. B-2532
CRAVEN COUNTY
STATION: 35+83.08 -L-

SHEET 1 OF 3

STATE OF NORTH CAROLINA
DEPARTMENT OF TRANSPORTATION
RALEIGH

STANDARD
GRAVITY RETAINING WALL
WITH TRAFFIC SURCHARGE

NORTH CAROLINA PROFESSIONAL SEAL 21638 ENGINEER LAURA E. SUTTON
11/30/06

REVISIONS						SHEET NO.
NO.	BY:	DATE:	NO.	BY:	DATE:	W-1
1			3			TOTAL SHEETS 3
2			4			

ASSEMBLED BY : P.C. BREWER DATE : 8/15/06
CHECKED BY : A.S. CALLAWAY DATE : 8/21/06
DRAWN BY : KMM 12/05
CHECKED BY : GM 5/06
ADDED 5/1/06

24-OCT-2006 14:38
r:\Structures\pbrewer\Microstation\B2532_sd_RW_02.dgn
LSUTTON

STD. NO. GRW1

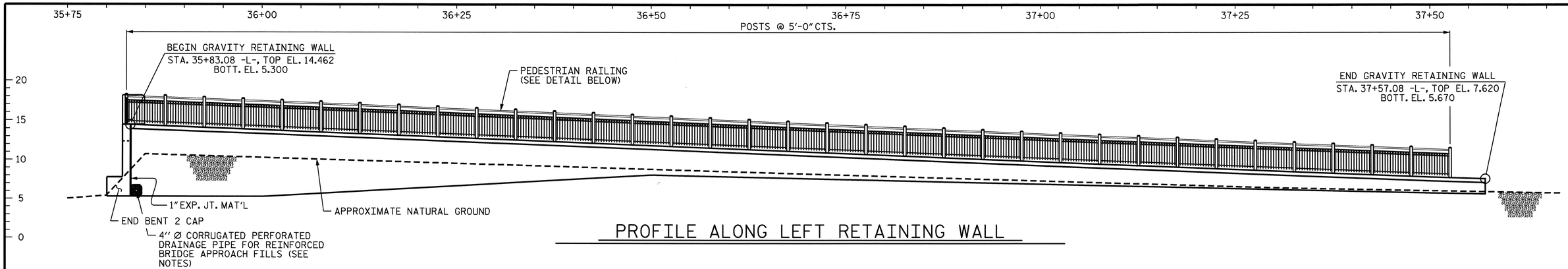

PROFILE ALONG LEFT RETAINING WALL

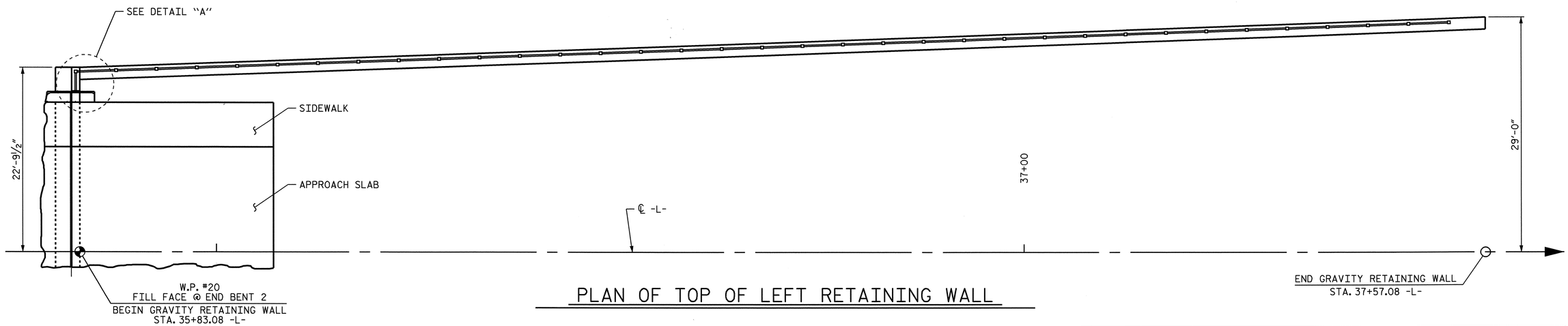

PLAN OF TOP OF LEFT RETAINING WALL

BILL OF MATERIAL - LEFT	
GRAVITY RETAINING WALL	758.50 SQ. FT.
PEDESTRIAN RAILING	172.60 LIN. FT.

RETAINING WALL ELEVATIONS - LEFT				
-L- STA.	OFFSET FROM ℄ -L-	ELEVATION @ TOP OF WALL	ELEVATION @ BOTTOM OF WALL	WALL HEIGHT
35+83.08	22.79'	14.462	5.300	9.16'
36+00.00	23.40'	13.850	5.300	8.55'
36+50.00	25.18'	11.860	8.120	3.74'
37+00.00	26.96'	9.810	6.960	2.85'
37+50.00	28.75'	7.860	5.810	2.05'
37+57.08	29.00'	7.620	5.670	1.95'

TOP OF WALL ELEVATION INCLUDES COPING.

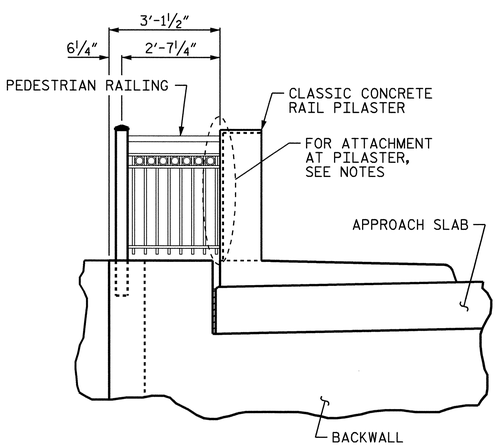

SECTION B-B

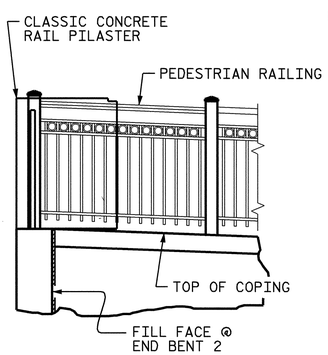

SECTION A-A

(FOR CLARITY, APPROACH SLAB NOT SHOWN)

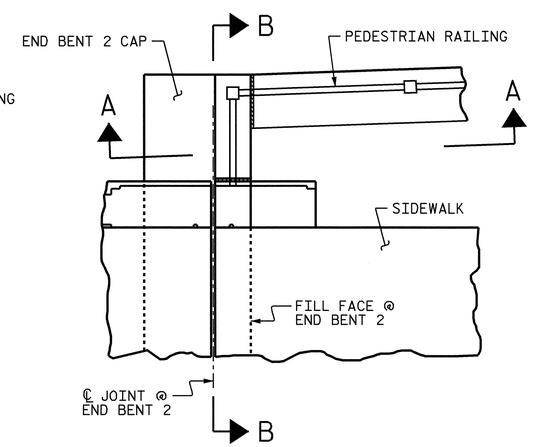

DETAIL "A"

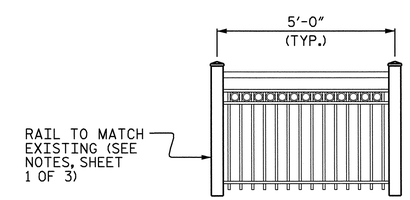

RAIL DETAIL

PROJECT NO. B-2532

CRAVEN COUNTY

STATION: 35+83.08 -L-

SHEET 2 OF 3

STATE OF NORTH CAROLINA
DEPARTMENT OF TRANSPORTATION
RALEIGH

GRAVITY RETAINING WALL

WITH TRAFFIC SURCHARGE

NORTH CAROLINA PROFESSIONAL SEAL 21638 ENGINEER LAURA E. SUTTON
11/30/06

REVISIONS						SHEET NO.
NO.	BY:	DATE:	NO.	BY:	DATE:	W-2
1			3			TOTAL SHEETS
2			4			3

DRAWN BY : P.C. BREWER DATE : 8/15/06
CHECKED BY : A.S. CALLAWAY DATE : 8/21/06

24-OCT-2006 14:38
r:\Structures\pbrewer\Microstation\B2532_sd_RW_02.dgn
LSUTTON

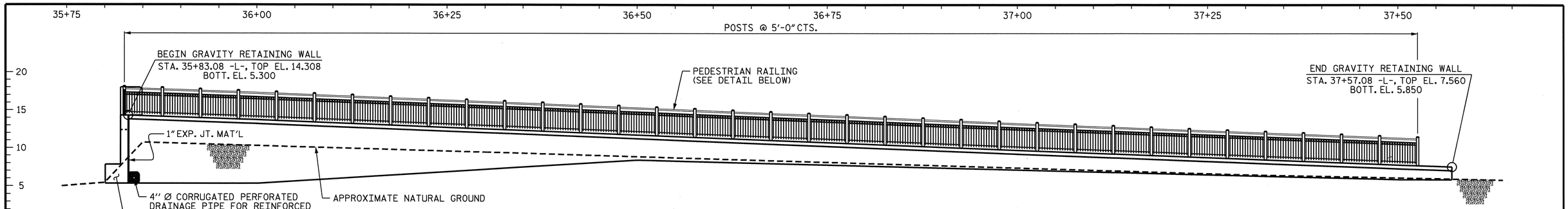

PROFILE ALONG RIGHT RETAINING WALL

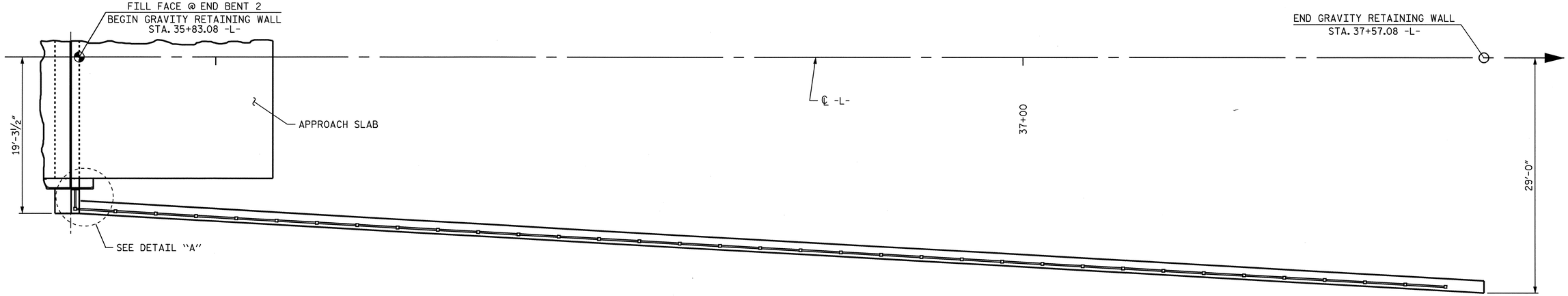

PLAN OF TOP OF RIGHT RETAINING WALL

BILL OF MATERIAL-RIGHT	
GRAVITY RETAINING WALL	714.29 SQ. FT.
PEDESTRIAN RAILING	172.60 LIN. FT.

RETAINING WALL ELEVATIONS - RIGHT				
-L- STA.	OFFSET FROM ℄ -L-	ELEVATION @ TOP OF WALL	ELEVATION @ BOTTOM OF WALL	WALL HEIGHT
35+83.08	19.29'	14.308	5.300	9.01'
36+00.00	20.24'	13.720	5.300	8.42'
36+50.00	23.03'	11.730	8.400	3.33'
37+00.00	25.82'	9.700	7.120	2.58'
37+50.00	28.61'	7.800	5.880	1.92'
37+57.08	29.00'	7.560	5.850	1.71'

TOP OF WALL ELEVATION INCLUDES COPING.

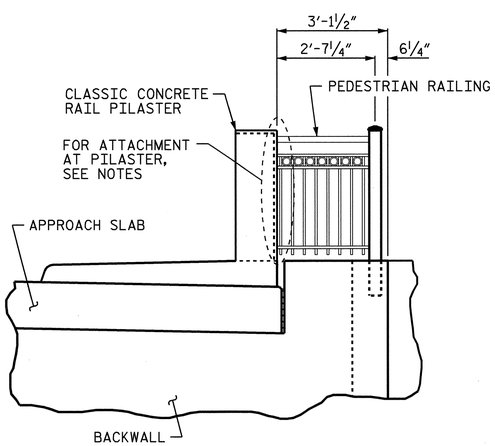

SECTION B-B

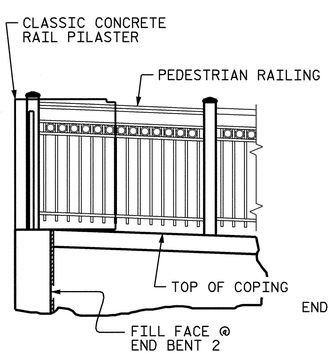

SECTION A-A

(FOR CLARITY, APPROACH SLAB NOT SHOWN)

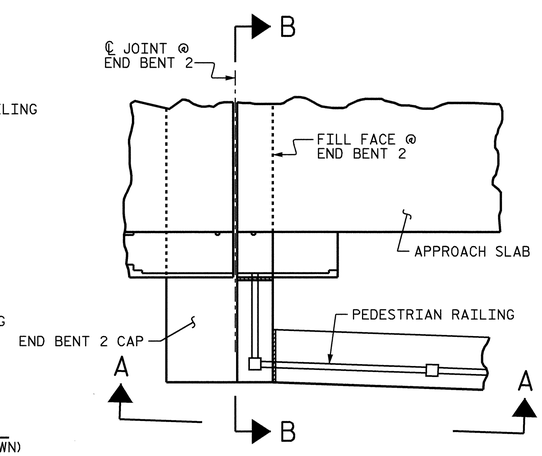

DETAIL "A"

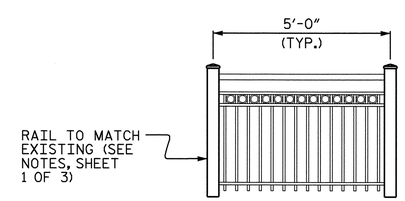

RAIL DETAIL

PROJECT NO. B-2532

CRAVEN COUNTY

STATION: 35+83.08 -L-

SHEET 3 OF 3

STATE OF NORTH CAROLINA
DEPARTMENT OF TRANSPORTATION
RALEIGH

GRAVITY RETAINING WALL

WITH TRAFFIC SURCHARGE

NORTH CAROLINA PROFESSIONAL SEAL 21638 ENGINEER LAURA E. SUTTON
11/30/06

REVISIONS						SHEET NO.
NO.	BY:	DATE:	NO.	BY:	DATE:	W-3
1			3			TOTAL SHEETS
2			4			3

DRAWN BY : P.C. BREWER DATE : 8/15/06
CHECKED BY : A.S. CALLAWAY DATE : 8/21/06

30-NOV-2006 11:33
r:\Structures\pbrewer\Microstation\B2532_sd_RW_02.dgn
lsutton