PROJECT I-4411

CONTRACT: C201208

See Sheet 1-A For Index of Sheets

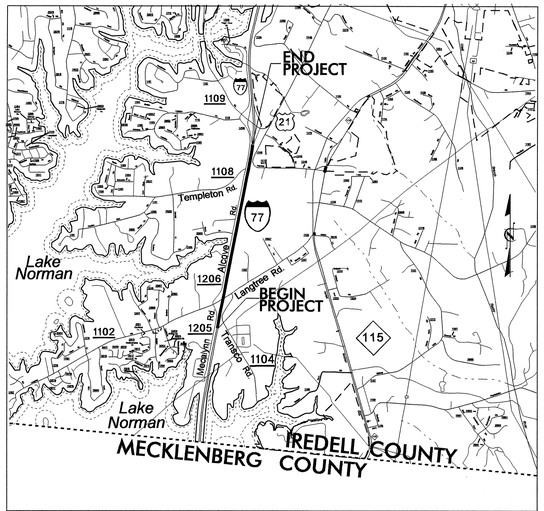

VICINITY MAP

STATE OF NORTH CAROLINA
DIVISION OF HIGHWAYS

IREDELL COUNTY

LOCATION: PROPOSED INTERCHANGE AT EXISTING I-77 AND SR 1102 GRADE SEPARATION

TYPE OF WORK: GRADING, PAVING, DRAINAGE, LIGHTING, SIGNING, STRUCTURE, AND SIGNALS

STATE	STATE PROJECT REFERENCE NO.	SHEET NO.	TOTAL SHEETS
N.C.	I-4411	1	

STATE PROJ. NO.	F. A. PROJ. NO.	DESCRIPTION
35604.1.1		PE
35604.2.1		R/W, UTL
35604.3.2	IMF-77-1(178)32	CONST.

NAD 83

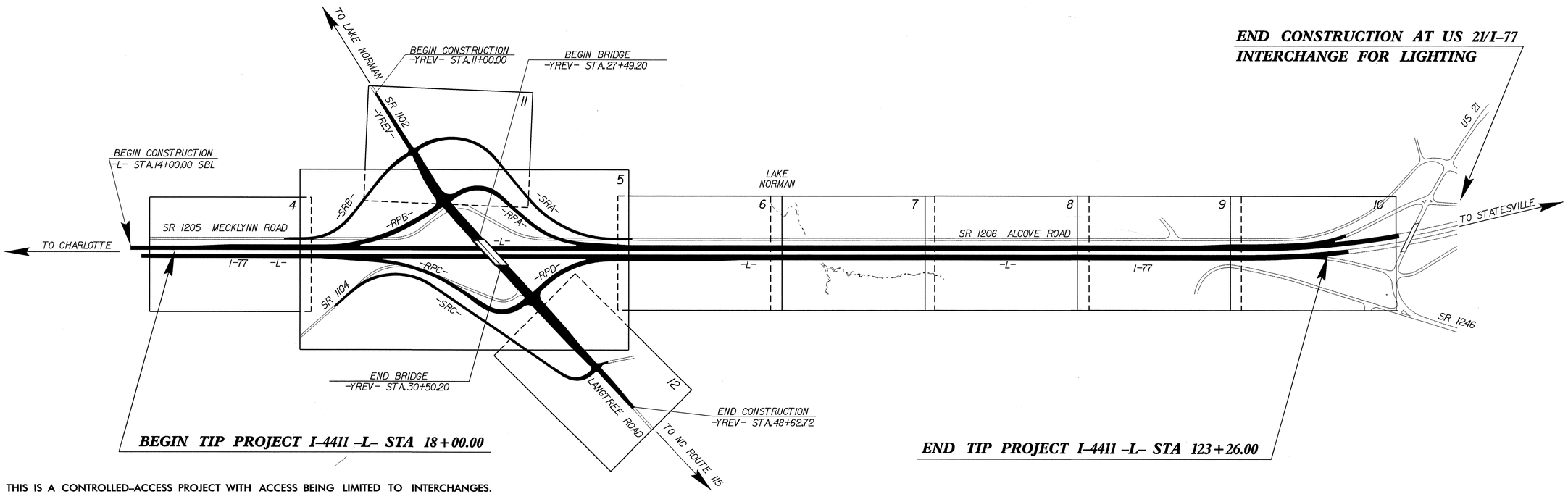

THIS IS A CONTROLLED-ACCESS PROJECT WITH ACCESS BEING LIMITED TO INTERCHANGES.

GRAPHIC SCALES

50 25 0 50 100
PLANS

50 25 0 50 100
PROFILE (HORIZONTAL)

10 5 0 10 20
PROFILE (VERTICAL)

DESIGN DATA

ADT 2008 = 85,100
ADT 2025 = 115,600
DHV = 11 %
D = 60 %
T = 29 %*
V = 70 MPH
* TTST 21% DUAL 8 %

FUNCTIONAL CLASSIFICATION
RURAL PRINCIPAL ARTERIAL – INTERSTATE

PROJECT LENGTH

TOTAL LENGTH ROADWAY TIP PROJECT I-4411 = 1.994 MILES

Prepared In the Office of:
DIVISION OF HIGHWAYS
1000 Birch Ridge Dr., NC, 27610

2002 STANDARD SPECIFICATIONS

RIGHT OF WAY DATE:
JANUARY 30, 2004

LETTING DATE:
JANUARY 16, 2007

G. E. BREW, PE
PROJECT ENGINEER

D. WILLIAMS
PROJECT DESIGN ENGINEER

HYDRAULICS ENGINEER

NORTH CAROLINA PROFESSIONAL SEAL 20329 ENGINEER MATT A. BILLINGS

SIGNATURE P.E.

ROADWAY DESIGN ENGINEER

NORTH CAROLINA PROFESSIONAL SEAL 18903 ENGINEER GREGORY E. BREW

10-24-06

SIGNATURE P.E.

DIVISION OF HIGHWAYS
STATE OF NORTH CAROLINA

P.E.
STATE DESIGN ENGINEER

DEPARTMENT OF TRANSPORTATION
FEDERAL HIGHWAY ADMINISTRATION

APPROVED
DIVISION ADMINISTRATOR DATE

09/08/99
18-OCT-2006 07:55
r:\proj\I4411_rdy_tsh.dgn
$$$$USERNAME$$$$
RD214495 10/18/2006 I4411_rdy_tsh wakabidavis RD-Oce34

5/28/99

PROJECT REFERENCE NO.	SHEET NO.
I-4411	I-A

STATE OF NORTH CAROLINA
DIVISION OF HIGHWAYS

INDEX OF SHEETS

NORTH CAROLINA PROFESSIONAL SEAL 18903 ENGINEER GREGORY E. BREWER
10-27-06

INDEX OF SHEETS

SHEET NUMBER	SHEET
1	TITLE SHEET
1-A	INDEX OF SHEETS, GENERAL NOTES, AND LIST OF STANDARD DRAWINGS
1-B THRU 1-E	CONVENTIONAL SYMBOLS AND SURVEY CONTROL SHEETS
2	FINAL PAVEMENT SCHEDULE, TYPICAL SECTIONS, AND
2-A THRU 2-G	TYPICAL SECTIONS, SHOULDER DRAIN DETAL AND DETAIL FOR METHOD OF WEDGING
2-H	DITCH DETAIL SHEET
2-I	DETAIL SHOWING SHOULDER BERM GUTTER
2-J	DETAIL OF INSIDE SHOULDER UNDERCUT
2-K THRU 2-N	DETAIL OF GUARDRAIL INSTALLATION
2-O THRU 2-Q	DETAIL OF STRUCTURE ANCHOR UNITS
2-R	DETAIL OF DROP INLET INSTALLATION IN EXPRESSWAY GUTTER
2-S	GUIDE FOR GRADING SUBGRADE DETAIL
2-T	DETAIL FOR ASPHALT SHOULDERS MILLED RUMBLE STRIPS
2-U	DETAIL FOR SETTLEMENT GAUGE
2-V	DETAIL FOR ROCK EMBANKMENT
2-W THRU 2-Z	REINFORCED BRIDGE APPROACH FILL
2-AA	DETAIL FOR STANDARD TEMPORARY SHORING FOR MAINTENANCE OF TRAFFIC
3	SUMMARY OF QUANTITIES
3-A THRU 3-F	SUMMARY OF DRAINAGE QUANTITIES
3-G	SUMMARY OF EARTHWORK
3-H	GUARDRAIL SUMMARY
3-I	FENCE SUMMARY SHOULDER DRAIN SUMMARY AND PAVEMENT REMOVAL SUMMARY
3-J	PARCEL INDEX SHEET
4 THRU 12	PLAN SHEETS
13 THRU 20	PROFILE SHEETS
TCP-1 THRU TCP-29	TRAFFIC CONTROL PLANS
PM-1 THRU PM-12	PAVEMENT MARKING PLANS
E-1 THRU E-4	ELECTRICAL PLANS
EC-1 THRU EC-21	EROSION CONTROL PLANS
RF-1	REFORESTATION PLANS
SIGN-1 THRU SIGN-24	SIGNING PLANS
SIG-1 THRU SIG-16	SIGNAL PLANS
UC -1 THRU UC- 5	UTILITIES CONSTRUCTION PLANS
UO-1 THRU UO-6	UTILITIES CONFLICT PLANS (UTILITIES BY OTHERS)
XO-1 THRU XO-4	CROSS-SECTIONS SUMMARY SHEET
X-1 THRU X-120	CROSS-SECTIONS
C-1 THRU C-2	CULVERT PLANS
S-1 THRU S-44	STRUCTURE PLANS

IREDELL COUNTY I-4411
GENERAL NOTES:

2002 SPECIFICATIONS
EFFECTIVE: 01-15-02
REVISED: 05-14-03

GRADING AND SURFACING OR RESURFACING AND WIDENING:

THE GRADE LINES SHOWN DENOTE THE FINISHED ELEVATION OF THE PROPOSED SURFACING AT GRADE POINTS SHOWN ON THE TYPICAL SECTIONS. WHERE NO GRADE LINES ARE SHOWN, THE PROFILES SHOWN DENOTE THE TOP ELEVATION OF THE EXISTING PAVEMENT ALONG THE CENTER LINE OF SURVEY ON WHICH THE PROPOSED RESURFACING WILL BE PLACED. GRADE LINES MAY BE ADJUSTED BY THE ENGINEER IN ORDER TO SECURE A PROPER TIE-IN.

SUPERELEVATION:

ALL CURVES ON THIS PROJECT SHALL BE SUPERELEVATED IN ACCORDANCE WITH STD. NO. 225.04 USING THE RATE OF SUPERELEVATION AND RUNOFF SHOWN ON THE PLANS. SUPERELEVATION IS TO BE REVOLVED ABOUT THE GRADE POINTS SHOWN ON THE TYPICAL SECTIONS.

SHOULDER CONSTRUCTION:

ASPHALT AND EARTH SHOULDER CONSTRUCTION ON THE HIGH SIDE OF SUPERELEVATED CURVES SHALL BE IN ACCORDANCE WITH STD. NO. 560.01 OR 560.02.

SIDE ROADS:

THE CONTRACTOR WILL BE REQUIRED TO DO ALL NECESSARY WORK TO PROVIDE SUITABLE CONNECTIONS WITH ALL ROADS, STREETS, AND DRIVES ENTERING THIS PROJECT. THIS WORK WILL BE PAID FOR AT THE CONTRACT UNIT PRICE FOR THE PARTICULAR ITEMS INVOLVED.

BERM DITCHES:

BERM DITCHES SHALL BE CONSTRUCTED IN ACCORDANCE WITH STD. NO. 240.01 AT LOCATIONS SHOWN ON THE PLANS OR AS DIRECTED BY THE ENGINEER.

SHOULDER DRAINS:

SHOULDER DRAINS SHALL BE CONSTRUCTED IN ACCORDANCE WITH STD. NO. 816.02 AND DETAILS IN PLANS AT LOCATIONS DIRECTED BY THE ENGINEER.

DRIVEWAYS:

DRIVEWAYS SHALL BE CONSTRUCTED IN ACCORDANCE WITH DETAILS IN PLANS AT LOCATIONS SHOWN ON PLANS OR AS DIRECTED BY THE ENGINEER.

GUARDRAIL:

THE GUARDRAIL LOCATIONS SHOWN ON THE PLANS MAY BE ADJUSTED DURING CONSTRUCTION AS DIRECTED BY THE ENGINEER. THE CONTRACTOR SHOULD CONSULT WITH THE ENGINEER PRIOR TO ORDERING GUARDRAIL MATERIAL.

TEMPORARY SHORING:

SHORING REQUIRED FOR THE MAINTENANCE OF TRAFFIC WILL BE PAID FOR AS "EXTRA WORK" IN ACCORDANCE WITH SECTION 104-7.

END BENTS:

THE ENGINEER SHALL CHECK THE STRUCTURE END BENT PLANS, DETAILS, AND CROSS-SECTION PRIOR TO SETTING OF THE SLOPE STAKES FOR THE EMBANKMENT OR EXCAVATION APPROACHING A BRIDGE.

UTILITIES:

UTILITY OWNERS ON THIS PROJECT ARE

BELL SOUTH, ADELPHIA, AND PSNC ENERGY.

ANY RELOCATION OF EXISTING UTILITIES WILL BE ACCOMPLISHED BY OTHERS.
THE FOLLOWING NOTE WHEN UTILITY CONSTRUCTION PLANS ARE INCLUDED IN THE PROJECT.)
ANY RELOCATION OF EXISTING UTILITIES WILL BE ACCOMPLISHED BY OTHERS, EXCEPT AS SHOWN ON THE PLANS.

RIGHT-OF-WAY MARKERS:

ALL RIGHT-OF-WAY MARKERS ON THIS PROJECT SHALL BE PLACED BY OTHERS.

EFF. 01-15-02
REV.04-07-04

ROADWAY ENGLISH STANDARD DRAWINGS

The following Roadway Standards as appear in "Roadway Standard Drawings" Highway Design Branch - N. C. Department of Transportation - Raleigh, N. C., Dated Janurary 15, 2002 are applicable to this project and by reference hereby are considered a part of these plans:

STD.NO.	TITLE
	DIVISION 2 - EARTHWORK
200.03	Method of Clearing - Method III
225.02	Guide for Grading Subgrade - Secondary and Local
225.03	Deceleration and Acceleration Lanes
225.04	Method of Obtaining Superelevation - Two Lane Pavement
225.05	Method of Obtaining Superelevation - Divided Highways
225.09	Guide for Shoulder and Ditch Transition at Grade Separations
240.01	Guide for Berm Ditch Construction
	DIVISION 3 - PIPE CULVERTS
300.01	Method of Pipe Installation - Method 'A'
310.10	Driveway Pipe Construction
	DIVISION 5 - SUBGRADE, BASES AND SHOULDERS
560.01	Method of Shoulder Construction - High Side of Superelevated Curve - Method I
560.02	Method of Shoulder Construction - High Side of Superelevated Curve - Method II
	DIVISION 6 - ASPHALT BASES AND PAVEMENTS
610.01	Guide for Paving Shoulders Under Bridges - Method I
665.01	Milled Rumble Strips - Asphalt Pavements
	DIVISION 8 - INCIDENTALS
816.01	Concrete Pads - for Shoulder Drain Installation
816.02	Aggregate Shoulder Drain
816.04	Markers for Drainage Structure and Concrete Pad
820.04	Drain Installation in Shoulder Berm Gutter
838.01	Concrete Endwall for Single and Double Pipe Culverts - 15" thru 48" Pipe 90 Skew
838.02	Concrete Endwall and Sluice Gate - 15" thru 36" Pipe 90 Skew
838.11	Brick Endwall for Single and Double Pipe Culverts - 15" thru 48" Pipe 90 Skew
838.80	Precast Concrete Endwall for Single - 12" thru 72" Pipe 90 Skew
840.00	Concrete Base Pad for Drainage Structures
840.04	Concrete Catch Basin with Single and Multiple Pipes - 12" thru 48" Pipe
840.05	Brick Catch Basin with Single and Multiple Pipes - 12" thru 48" Pipe
840.14	Concrete Drop Inlet - 12" thru 30" Pipe
840.15	Brick Drop Inlet - 12" thru 30" Pipe
840.16	Drop Inlet Frame and Grates - for use with Std. Dwg 840.14 and 840.15
840.17	Concrete Median Drop Inlet Type 'A' - 12" thru 72" Pipe
840.18	Concrete Median Drop Inlet Type 'B' - 12" thru 36" Pipe
840.19	Concrete Median Drop Inlet Type 'D' - 12" thru 36" Pipe
840.20	Frames and Wide Slot Flat Grates
840.22	Frames and Wide Slot Sag Grates
840.24	Frames and Narrow Slot Sag Grates
840.25	Anchorage for Frames - Brick or Concrete
840.26	Brick Median Drop Inlet Type 'A' - 12" thru 72" Pipe
840.27	Brick Median Drop Inlet Type 'B' - 12" thru 36" Pipe
840.28	Brick Median Drop Inlet Type 'D' - 12" thru 36" Pipe
840.31	Concrete Junction Box - 12" thru 66" Pipe
840.32	Brick Junction Box - 12" thru 66" Pipe
840.34	Traffic Bearing Junction Box - for Use with Pipes 42" and Under
840.45	Precast Drainage Structure
840.54	Manhole Frame and Cover
840.66	Drainage Structure Steps
840.71	Concrete and Brick Pipe Plug
840.72	Pipe Collar
846.01	Concrete Curb, Gutter and Curb & Gutter
852.01	Concrete Islands
852.06	Method for Placement of Drop Inlets in Concrete Islands
862.01	Guardrail Placement
866.01	Chain Link Fence - 4', 5' and 6' High Fence
866.02	Woven Wire Fence - with Wood Post
876.02	Guide for Rip Rap at Pipe Outlets
876.04	Drainage Ditches with Class 'B' Rip Rap

27-OCT-2006 08:27
f:\proj\i4411\index.dgn
$$$$USERNAME$$$$

PROJECT REFERENCE NO.	SHEET NO.
I-4411	I-B

Note: Not to Scale

****S.U.E. = Subsurface Utility Engineering***

STATE OF NORTH CAROLINA
DIVISION OF HIGHWAYS

CONVENTIONAL PLAN SHEET SYMBOLS

BOUNDARIES AND PROPERTY:

- State Line
- County Line
- Township Line
- City Line
- Reservation Line
- Property Line
- Existing Iron Pin — EIP
- Property Corner
- Property Monument — EOM
- Parcel/Sequence Number — 123
- Existing Fence Line
- Proposed Woven Wire Fence
- Proposed Chain Link Fence
- Proposed Barbed Wire Fence
- Existing Wetland Boundary — WLB
- Proposed Wetland Boundary — WLB
- Existing High Quality Wetland Boundary — HQ WLB
- Existing Endangered Animal Boundary — EAB
- Existing Endangered Plant Boundary — EPB

BUILDINGS AND OTHER CULTURE:

- Gas Pump Vent or U/G Tank Cap
- Sign — S
- Well — W
- Small Mine
- Foundation
- Area Outline
- Cemetery
- Building
- School
- Church
- Dam

HYDROLOGY:

- Stream or Body of Water
- Hydro, Pool or Reservoir
- River Basin Buffer — RBB
- Flow Arrow
- Disappearing Stream
- Spring
- Swamp Marsh
- Proposed Lateral, Tail, Head Ditch — FLOW
- False Sump

RAILROADS:

- Standard Guage — CSX TRANSPORTATION
- RR Signal Milepost — MILEPOST 35
- Switch — SWITCH
- RR Abandoned
- RR Dismantled

RIGHT OF WAY:

- Baseline Control Point
- Existing Right of Way Marker
- Existing Right of Way Line
- Proposed Right of Way Line — RW
- Proposed Right of Way Line with Iron Pin and Cap Marker — RW
- Proposed Right of Way Line with Concrete or Granite Marker — RW
- Existing Control of Access — CA
- Proposed Control of Access — CA
- Existing Easement Line — E
- Proposed Temporary Construction Easement — E
- Proposed Temporary Drainage Easement — TDE
- Proposed Permanent Drainage Easement — PDE
- Proposed Permanent Utility Easement — PUE

ROADS AND RELATED FEATURES:

- Existing Edge of Pavement
- Existing Curb
- Proposed Slope Stakes Cut — C
- Proposed Slope Stakes Fill — F
- Proposed Wheel Chair Ramp — WCR
- Curb Cut for Future Wheel Chair Ramp — CCFR
- Existing Metal Guardrail
- Proposed Guardrail
- Existing Cable Guiderail
- Proposed Cable Guiderail
- Equaility Symbol
- Pavement Removal

VEGETATION:

- Single Tree
- Single Shrub
- Hedge
- Woods Line
- Orchard
- Vineyard — Vineyard

EXISTING STRUCTURES:

MAJOR:

- Bridge, Tunnel or Box Culvert — CONC
- Bridge Wing Wall, Head Wall and End Wall — CONC WW

MINOR:

- Head and End Wall — CONC HW
- Pipe Culvert
- Footbridge
- Drainage Box: Catch Basin, DI or JB — CB
- Paved Ditch Gutter
- Storm Sewer Manhole — S
- Storm Sewer — S

UTILITIES:

POWER:

- Existing Power Pole
- Proposed Power Pole
- Existing Joint Use Pole
- Proposed Joint Use Pole
- Power Manhole — P
- Power Line Tower
- Power Transformer
- U/G Power Cable Hand Hole — HH
- H-Frame Pole
- Recorded U/G Power Line — P
- Designated U/G Power Line (S.U.E.*) — P

TELEPHONE:

- Existing Telephone Pole
- Proposed Telephone Pole
- Telephone Manhole — T
- Telephone Booth
- Telephone Pedestal — T
- Telephone Cell Tower
- U/G Telephone Cable Hand Hole — HH
- Recorded U/G Telephone Cable — T
- Designated U/G Telephone Cable (S.U.E.*) — T
- Recorded U/G Telephone Conduit — TC
- Designated U/G Telephone Conduit (S.U.E.*) — TC
- Recorded U/G Fiber Optics Cable — T FO
- Designated U/G Fiber Optics Cable (S.U.E.*) — T FO

WATER:

- Water Manhole — W
- Water Meter
- Water Valve
- Water Hydrant
- Recorded U/G Water Line
- Designated U/G Water Line (S.U.E.*)
- Above Ground Water Line — A/G Water

TV:

- TV Satellite Dish
- TV Pedestal — C
- TV Tower
- U/G TV Cable Hand Hole — HH
- Recorded U/G TV Cable — TV
- Designated U/G TV Cable (S.U.E.*) — TV
- Recorded U/G Fiber Optic Cable — TV FO
- Designated U/G Fiber Optic Cable (S.U.E.*) — TV FO

GAS:

- Gas Valve
- Gas Meter
- Recorded U/G Gas Line — G
- Designated U/G Gas Line (S.U.E.*) — G
- Above Ground Gas Line — A/G Gas

SANITARY SEWER:

- Sanitary Sewer Manhole
- Sanitary Sewer Cleanout
- U/G Sanitary Sewer Line — SS
- Above Ground Sanitary Sewer — A/G Sanitary Sewer
- Recorded SS Forced Main Line — FSS
- Designated SS Forced Main Line (S.U.E.*) — FSS

MISCELLANEOUS:

- Utility Pole
- Utility Pole with Base
- Utility Located Object
- Utility Traffic Signal Box — S
- Utility Unknown U/G Line — ?UTL
- U/G Tank; Water, Gas, Oil
- A/G Tank; Water, Gas, Oil
- U/G Test Hole (S.U.E.*)
- Abandoned According to Utility Records — AATUR
- End of Information — E.O.I.

STATE	STATE PROJECT REFERENCE NO.	SHEET NO.	TOTAL SHEETS
N.C.	I-4411	1C	

LOCATION AND SURVEYS

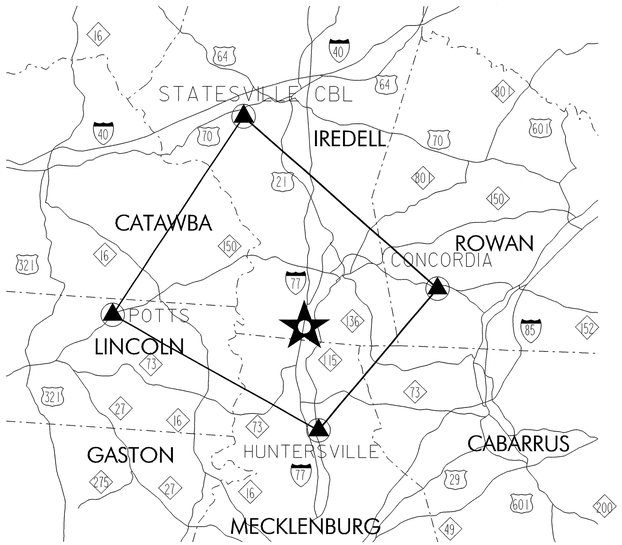

NOT TO SCALE

SURVEY CONTROL SHEET

DATUM DESCRIPTION

THE LOCALIZED COORDINATE SYSTEM DEVELOPED FOR THIS PROJECT IS BASED ON THE STATE PLANE COORDINATES ESTABLISHED BY NCGS FOR MONUMENT "SCHOOL"
WITH NAD 83 STATE PLANE GRID COORDINATES OF NORTHING: 672252.7040(ft) EASTING: 1442140.3605(ft)
THE AVERAGE COMBINED GRID FACTOR USED ON THIS PROJECT (GROUND TO GRID) IS: 0.99985137
THE N.C. LAMBERT GRID BEARING AND LOCALIZED HORIZONTAL GROUND DISTANCE FROM "SCHOOL" TO -L- STATION 10+00.00 IS
S 7° 45' 26" E 22865.12
ALL LINEAR DIMENSIONS ARE LOCALIZED HORIZONTAL DISTANCES
VERTICAL DATUM USED IS NAVD 88

NOTES

THE SITE CALIBRATION SHOWN IS BASED UPON A NETWORK TIED TO THE HARN (HIGH ACCURACY REFERENCE NETWORK) NAD 83/95 ADJUSTMENT. THIS CALIBRATION WILL ALLOW THE END USER TO WORK WITHIN THE SAME COORDINATE SYSTEM WHEN USING RTK (REAL TIME KINEMATIC) GPS AND A LOCAL BASE STATION. IF ANOTHER SYSTEM SUCH AS VRS (VIRTUAL REFERENCE STATION) IS USED, ADDITIONAL FIELD TIES MAY BE NEEDED TO REDUCE POSSIBLE ERRORS, OR BIASES.

THE CONTROL DATA FOR THIS PROJECT CAN BE FOUND ELECTRONICALLY BY SELECTING "PROJECT CONTROL DATA" AT:
HTTP://WWW.DOH.DOT.STATE.NC.US/PRECONSTRUCT/HIGHWAY/LOCATION/PROJECT/

THE FILES TO BE FOUND ARE AS FOLLOWS:

I4411_LS_GPSCALIB_030630.TXT
I4411_LS_WGS84_030630.TXT
I4411_LS_LOCAL_030630.TXT
I4411_LS_BASELINE_030630.TXT

THE WGS84 AND LOCAL FILES ARE COMMA DELIMITED AND CAN BE USED TO REPRODUCE THE SITE CALIBRATION FOR THE END USER'S GPS EQUIPMENT. IF FURTHER INFORMATION IS NEEDED, PLEASE CONTACT THE LOCATION AND SURVEYS UNIT.

◆ ***INDICATES CONTROL MONUMENTS SET FOR HORIZONTAL PROJECT CONTROL BY THE NCDOT LOCATION AND SURVEYS UNIT.***

PROJECT CONTROL ESTABLISHED USING GLOBAL POSITIONING SYSTEM.

NETWORK ESTABLISHED FROM EXISTING HARN MONUMENTATION.

SEE GPS CALIBRATION SHEET FOR HORIZONTAL AND VERTICAL COORDINATE VALUES.

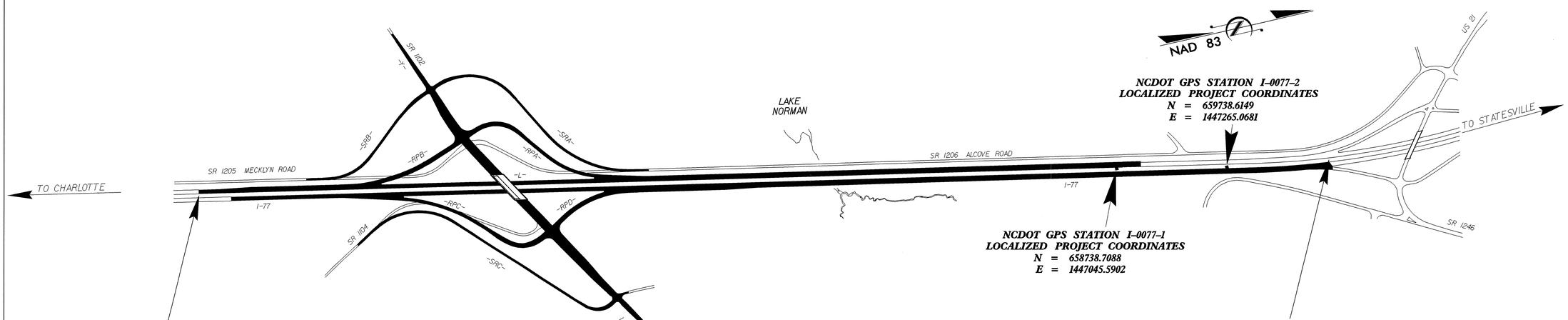

-L- STA 18+00.00 BEGIN STATE PROJECT 6.821012
LOCALIZED PROJECT COORDINATES
N = 650381.2984
E = 1445383.4788

-L- STA 123+00.00 END STATE PROJECT 6.821012
LOCALIZED PROJECT COORDINATES
N = 660682.4645
E = 1447412.9364

NOTE: DRAWING NOT TO SCALE

PROJECT REFERENCE NO.	SHEET NO.
I-4411	1 D
LOCATION & SURVEYS	

SURVEY CONTROL SHEET

GPS CALIBRATION REPORT

PROJECT : I-4411

TIP NUMBER	I-4411		
USER NAME	JGORDON	DATE & TIME	9:29:58 AM 6/30/03
COORDINATE SYSTEM	SITE	ZONE	NORTH CAROLINA 3200
HORIZONTAL DATUM	NAD 1983 (CONUS)		
VERTICAL DATUM		GEOID MODEL	GEOID99 (CONUS)
COORDINATE UNITS	METERS		
DISTANCE UNITS	METERS		
HEIGHT UNITS	METERS		

LOCAL SITE INFORMATION
LOCALIZED AROUND

LATITUDE	N/A
LONGITUDE	N/A
SITE SCALE FACTOR	N/A

THE NORTH CAROLINA DEPARTMENT OF TRANSPORTATION USES A LOCALIZED COORDINATE SYSTEM WHICH IS VERY SIMILAR TO NORTH CAROLINA ZONE 3200 FROM WHICH IT IS DERIVED. PLEASE TAKE CARE IN UTILIZING THESE COORDINATES TO ELIMINATE CONFUSION OF THE TWO SYSTEMS. THIS FILE IS TO AID IN THE USE OF REAL TIME KINEMATIC (RTK) GPS DURING CONSTRUCTION LAYOUT.

DATUM TRANSFORMATION PARAMETERS

DATUM TRANSFORMATION COMPUTATION NOT REQUESTED

UPDATED DEFAULT PROJECTION (TRANSVERSE MERCATOR) DEFINITION

UPDATED DEFAULT PROJECTION NOT REQUESTED

HORIZONTAL ADJUSTMENT PARAMETERS

NORTHING COORDINATE OF ROTATION CENTER	202652.645M
EASTING COORDINATE OF ROTATION CENTER	438957.019M
ROTATION ABOUT THE CENTER POINT	0°00'00"
TRANSLATION NORTH	-0.333M
TRANSLATION EAST	-0.090M
SCALE FACTOR	1.00014866

VERTICAL ADJUSTMENT PARAMETERS

NORTHING COORDINATE OF ORIGIN POINT	225172.457M
EASTING COORDINATE OF ORIGIN POINT	433113.877M
VERTICAL SEPARATION AT ORIGIN	0.000M
SLOPE NORTH	0.006PPM
SLOPE EAST	-0.012PPM

GEOID MODEL DEFINITION

GEOID99 (CONUS)

RESIDUAL DIFFERENCES BETWEEN GPS (WGS84) AND LOCAL COORDINATES

SUMMARY

	MAXIMUM ERROR	ROOT MEAN SQUARE ERROR	POINT
HORIZONTAL	0.001M	0.000	SCHOOL - WGS84
VERTICAL	0.000M	0.000	I-0077-1 - WGS84
THREE-DIMENSIONAL	0.001M	0.000	SCHOOL - WGS84

POINT RESIDUALS

WGS84 COORDINATES	CALCULATED POINT FOR DISPLAY ONLY	LOCAL COORDINATES
POINT STATESVILLE WGS84	NORTHING 225172.457M	POINT STATESVILLE LOCAL
LATITUDE 35°45'50.97308"N	EASTING 433113.877M	NORTHING 225172.457M
LONGITUDE 80°57'06.84774"W	ELEVATION 292.486M	EASTING 433113.877M
HEIGHT 260.496M	HORZ ERROR 0.000M	ELEVATION 292.486M
	VERT ERROR 0.000M	UTILIZED HORZ AND VERT
	3D ERROR 0.000M	QUALITY SURVEY QUALITY
POINT CONCORDIA - WGS84	NORTHING 203523.714M	POINT CONCORDIA - LOCAL
LATITUDE 35°34'23.11943"N	EASTING 457408.554M	NORTHING 203523.714M
LONGITUDE 80°40'45.31562"W	ELEVATION 282.969M	EASTING 457408.554M
HEIGHT 251.797M	HORZ ERROR 0.000M	ELEVATION 282.969M
	VERT ERROR 0.000M	UTILIZED HORZ AND VERT
	3D ERROR 0.000M	QUALITY SURVEY QUALITY
POINT HUNTERSVILLE - WGS84	NORTHING 185840.051M	POINT HUNTERSVILLE - LOCAL
LATITUDE 35°24'40.86560"N	EASTING 442495.918M	NORTHING 185840.051M
LONGITUDE 80°50'24.42238"W	ELEVATION 247.808M	EASTING 442495.918M
HEIGHT 216.938M	HORZ ERROR 0.000M	ELEVATION 247.808M
	VERT ERROR 0.000M	UTILIZED HORZ AND VERT
	3D ERROR 0.000M	QUALITY SURVEY QUALITY
POINT POTTS - WGS84	NORTHING 200200.886M	POINT POTTS - LOCAL
LATITUDE 35°32'10.01412"N	EASTING 416713.902M	NORTHING 200200.886M
LONGITUDE 81°07'38.22813"W	ELEVATION 313.466M	EASTING 416713.902M
HEIGHT 281.857M	HORZ ERROR 0.000M	ELEVATION 313.466M
	VERT ERROR 0.000M	UTILIZED HORZ AND VERT
	3D ERROR 0.000M	QUALITY SURVEY QUALITY
POINT SCHOOL - WGS84	NORTHING 204903.034M	POINT SCHOOL - LOCAL
LATITUDE 35°34'57.49758"N	EASTING 439565.262M	NORTHING 204903.034M
LONGITUDE 80°52'34.83501"W	ELEVATION 264.539M	EASTING 439565.261M
HEIGHT 233.119M	HORZ ERROR 0.001M	ELEVATION 264.539M
	VERT ERROR 0.000M	UTILIZED HORZ AND VERT
	3D ERROR 0.001M	QUALITY SURVEY QUALITY
POINT BOSTWALT - WGS84	NORTHING 203707.330M	POINT BOSTWALT - LOCAL
LATITUDE 35°34'16.91209"N	EASTING 436658.994M	NORTHING 203707.330M
LONGITUDE 80°54'29.33103"W	ELEVATION 263.462M	EASTING 436658.994M
HEIGHT 232.033M	HORZ ERROR 0.000M	ELEVATION 263.462M
	VERT ERROR 0.000M	UTILIZED HORZ AND VERT
	3D ERROR 0.000M	QUALITY SURVEY QUALITY
POINT PP03 - WGS84	NORTHING 201566.596M	POINT PP03 - LOCAL
LATITUDE 35°33'06.36965"N	EASTING 434907.074M	NORTHING 201566.596M
LONGITUDE 80°55'37.24022"W	ELEVATION 254.978M	EASTING 434907.074M
HEIGHT 223.575M	HORZ ERROR 0.001M	ELEVATION 254.978M
	VERT ERROR 0.000M	UTILIZED HORZ AND VERT
	3D ERROR 0.000M	QUALITY SURVEY QUALITY
POINT 5-JS-21 - WGS84	NORTHING 201365.520M	POINT 5-JS-21 - LOCAL
LATITUDE 35°33'03.80154"N	EASTING 441303.632M	NORTHING 201365.521M
LONGITUDE 80°51'23.17575"W	ELEVATION 264.436M	EASTING 441303.632M
HEIGHT 233.128M	HORZ ERROR ?	ELEVATION 264.436M
	VERT ERROR 0.000M	UTILIZED VERTICAL
	3D ERROR 0.000M	QUALITY SURVEY QUALITY
POINT PP20 - WGS84	NORTHING 200634.441M	POINT PP20 - LOCAL
LATITUDE 35°32'40.59429"N	EASTING 442144.750M	NORTHING 200634.441M
LONGITUDE 80°50'49.24729"W	ELEVATION 260.373M	EASTING 442144.750M
HEIGHT 229.097M	HORZ ERROR 0.000M	ELEVATION 260.373M
	VERT ERROR 0.000M	UTILIZED HORZ AND VERT
	3D ERROR 0.000M	QUALITY SURVEY QUALITY
POINT I-0077-4 - WGS84	NORTHING 202397.133M	POINT I-0077-4 - LOCAL
LATITUDE 35°33'37.16055"N	EASTING 441128.205M	NORTHING 202397.133M
LONGITUDE 80°51'30.90614"W	ELEVATION 243.313M	EASTING 441128.205M
HEIGHT 211.974M	HORZ ERROR 0.000M	ELEVATION 243.313M
	VERT ERROR 0.000M	UTILIZED HORZ AND VERT
	3D ERROR 0.000M	QUALITY SURVEY QUALITY
POINT I-0077-3 - WGS84	NORTHING 202009.405M	POINT I-0077-3 - LOCAL
LATITUDE 35°33'24.60136"N	EASTING 441158.962M	NORTHING 202009.405M
LONGITUDE 80°51'29.39692"W	ELEVATION 248.951M	EASTING 441158.962M
HEIGHT 217.623M	HORZ ERROR 0.001M	ELEVATION 248.951M
	VERT ERROR 0.000M	UTILIZED HORZ AND VERT
	3D ERROR 0.001M	QUALITY SURVEY QUALITY
POINT I-0077-2 - WGS84	NORTHING 201088.732M	POINT I-0077-2 - LOCAL
LATITUDE 35°32'54.71544"N	EASTING 441127.275M	NORTHING 201088.732M
LONGITUDE 80°51'29.97058"W	ELEVATION 256.535M	EASTING 441127.275M
HEIGHT 225.232M	HORZ ERROR 0.001M	ELEVATION 256.535M
	VERT ERROR 0.000M	UTILIZED HORZ AND VERT
	3D ERROR 0.001M	QUALITY SURVEY QUALITY
POINT I-0077-1 - WGS84	NORTHING 200783.960M	POINT I-0077-1 - LOCAL
LATITUDE 35°32'44.78800"N	EASTING 441060.378M	NORTHING 200783.960M
LONGITUDE 80°51'32.39942"W	ELEVATION 248.627M	EASTING 441060.378M
HEIGHT 217.331M	HORZ ERROR 0.000M	ELEVATION 248.627M
	VERT ERROR 0.000M	UTILIZED HORZ AND VERT
	3D ERROR 0.001M	QUALITY SURVEY QUALITY

DATUM DESCRIPTION

THE LOCALIZED COORDINATE SYSTEM DEVELOPED FOR THIS PROJECT IS BASED ON THE STATE PLANE COORDINATES ESTABLISHED BY NCGS FOR MONUMENT "SCHOOL"
WITH NAD 83 STATE PLANE GRID COORDINATES OF
NORTHING: 672252.7040(ft) EASTING: 1442140.3605(ft)
THE AVERAGE COMBINED GRID FACTOR USED ON THIS PROJECT (GROUND TO GRID) IS: 0.99985137
THE N.C. LAMBERT GRID BEARING AND LOCALIZED HORIZONTAL GROUND DISTANCE FROM "SCHOOL" TO -L- STATION 10+00.00 IS
S 7° 45' 26" E 22865.12
ALL LINEAR DIMENSIONS ARE LOCALIZED HORIZONTAL DISTANCES
VERTICAL DATUM USED IS NAVD 88

NOTES

THE SITE CALIBRATION SHOWN IS BASED UPON A NETWORK TIED TO THE HARN (HIGH ACCURACY REFERENCE NETWORK) NAD 83/95 ADJUSTMENT. THIS CALIBRATION WILL ALLOW THE END USER TO WORK WITHIN THE SAME COORDINATE SYSTEM WHEN USING RTK (REAL TIME KINEMATIC) GPS AND A LOCAL BASE STATION. IF ANOTHER SYSTEM SUCH AS VRS (VIRTUAL REFERENCE STATION) IS USED, ADDITIONAL FIELD TIES MAY BE NEEDED TO REDUCE POSSIBLE ERRORS, OR BIASES.

THE CONTROL DATA FOR THIS PROJECT CAN BE FOUND ELECTRONICALLY BY SELECTING "PROJECT CONTROL DATA" AT:
HTTP://WWW.DOH.DOT.STATE.NC.US/PRECONSTRUCT/HIGHWAY/LOCATION/PROJECT/

THE FILES TO BE FOUND ARE AS FOLLOWS:

I4411_LS_GPSCALIB_030630.TXT
I4411_LS_WGS84_030630.TXT
I4411_LS_LOCAL_030630.TXT
I4411_LS_BASELINE_030630.TXT

THE WGS84 AND LOCAL FILES ARE COMMA DELIMITED AND CAN BE USED TO REPRODUCE THE SITE CALIBRATION FOR THE END USER'S GPS EQUIPMENT. IF FURTHER INFORMATION IS NEEDED, PLEASE CONTACT THE LOCATION AND SURVEYS UNIT.

PROJECT REFERENCE NO.	SHEET NO.
I-4411	1E
LOCATION & SURVEYS	

SURVEY CONTROL SHEET I-4411

BASELINE DATA

BL

POINT	DESC.	NORTH	EAST	ELEVATION	L STATION	OFFSET
201	BL-201	649681.6230	1445254.9660	779.01	10+88.71	11.18 RT
8	BL-8	651048.6110	1445505.7160	789.32	24+78.33	10.99 LT
7	BL-7	651636.2810	1445625.6380	795.38	30+78.10	8.63 LT
6	BL-6	652495.8280	1445798.3980	816.09	39+54.84	7.77 LT
5	BL-5	653530.1830	1446003.8020	821.98	50+09.39	9.18 LT
4	BL-4	654564.7000	1446213.3900	804.01	60+64.92	6.52 LT
3	BL-3	655615.3850	1446422.7250	782.92	71+36.26	7.28 LT
2	BL-2	656737.8620	1446646.6540	782.73	82+80.85	7.80 LT
1	BL-1	657799.0880	1446859.0160	800.28	93+63.12	7.65 LT
100	BL-100	658738.7080	1447045.5860	815.70	103+21.08	8.95 LT

BY

POINT	DESC.	NORTH	EAST	ELEVATION	Y STATION	OFFSET
21	BY-21	652437.1970	1444278.8350	816.50	10+57.86	15.92 RT
22	BY-22	652728.7190	1445044.2660	825.94	18+77.18	17.78 RT
13	BY-13	653125.0970	1445816.9200	843.46	27+45.99	0.81 RT
23	BY-23	653427.5690	1446401.5930	838.98	34+02.89	43.43 RT
24	BY-24	653836.6660	1447007.2040	834.89	41+32.23	13.94 RT
25	BY-25	654207.7660	1447613.2250	838.54	48+43.76	15.12 RT

BY1

POINT	DESC.	NORTH	EAST	ELEVATION	L STATION	OFFSET
9	BY1-9	649939.3510	1445180.7040	782.32	13+26.87	112.18 LT
10	BY1-10	650639.9810	1445322.9250	785.95	20+41.79	110.10 LT
11	BY1-11	651713.9700	1445539.0540	797.33	31+37.31	108.77 LT
12	BY1-12	652497.0150	1445681.2740	821.91	39+33.04	122.85 LT
BYEQ13		653125.0970	1445816.9200	843.46	45+75.52	113.00 LT
14	BY1-14	653676.4520	1445896.4220	818.48	51+31.76	143.16 LT
15	BY1-15	654581.4310	1446112.0800	796.83	60+61.46	109.14 LT
16	BY1-16	655406.3990	1446237.8880	803.93	68+95.08	147.54 LT
17	BY1-17	656310.6700	1446458.4510	777.69	78+25.05	108.58 LT
18	BY1-18	656965.6760	1446594.2570	797.15	84+93.97	103.85 LT
19	BY1-19	657965.3190	1446792.0170	809.80	95+12.98	105.95 LT
20	BY1-20	658677.7400	1446903.2320	818.64	102+33.38	136.59 LT

BY2

POINT	DESC.	NORTH	EAST	ELEVATION	SRC STATION	OFFSET
BYEQ23		653427.5691	1446401.5934	838.98	20+52.32	389.23 RT
26	BY2-26	652699.7050	1446060.2920	815.69	28+03.64	109.69 RT
27	BY2-27	652087.8880	1445929.9200	805.61	33+75.36	49.29 RT
28	BY2-28	651429.7530	1446313.8130	801.09	OUTSIDE PROJECT LIMITS	

.....
BM1 ELEVATION - 818.29
N 652417 E 1444133
Y STATION 10+00
S 80° 29' 19.6" W DIST 87.08
8" NAIL IN BASE OF 18" TRIPLE CHERRY
.....

.....
BM2 ELEVATION - 832.90
N 653393 E 1446455
Y STATION 34+31 100 RIGHT
8" NAIL IN BASE OF 24" WHITE OAK
.....

.....
BM3 ELEVATION - 833.77
N 654055 E 1447775
Y STATION 48+75
S 37° 59' 01.8" E DIST 230.47
8" NAIL IN BASE OF 24" RED OAK
.....

.....
BM4 ELEVATION - 800.09
N 651223 E 1446327
SRC STATION 40+36
S 9° 10' 25.2" E DIST 292.88
CHISLED SQUARE ON SIDE WALK
.....

DATUM DESCRIPTION

THE LOCALIZED COORDINATE SYSTEM DEVELOPED FOR THIS PROJECT
IS BASED ON THE STATE PLANE COORDINATES ESTABLISHED BY
NCGS FOR MONUMENT "SCHOOL"
WITH NAD 83 STATE PLANE GRID COORDINATES OF
NORTHING: 672252.7040(ft) EASTING: 1442140.3605(ft)
THE AVERAGE COMBINED GRID FACTOR USED ON THIS PROJECT
(GROUND TO GRID) IS: 0.99985137
THE N.C. LAMBERT GRID BEARING AND
LOCALIZED HORIZONTAL GROUND DISTANCE FROM
"SCHOOL" TO -L- STATION 10+00.00 IS
S 7° 45' 26" E 22865.12
ALL LINEAR DIMENSIONS ARE LOCALIZED HORIZONTAL DISTANCES
VERTICAL DATUM USED IS NAVD 88

NOTES

THE SITE CALIBRATION SHOWN IS BASED UPON A NETWORK TIED TO THE HARN (HIGH ACCURACY REFERENCE NETWORK) NAD 83/95 ADJUSTMENT. THIS CALIBRATION WILL ALLOW THE END USER TO WORK WITHIN THE SAME COORDINATE SYSTEM WHEN USING RTK (REAL TIME KINEMATIC) GPS AND A LOCAL BASE STATION. IF ANOTHER SYSTEM SUCH AS VRS (VIRTUAL REFERENCE STATION) IS USED, ADDITIONAL FIELD TIES MAY BE NEEDED TO REDUCE POSSIBLE ERRORS, OR BIASES.

THE CONTROL DATA FOR THIS PROJECT CAN BE FOUND ELECTRONICALLY BY SELECTING "PROJECT CONTROL DATA" AT:
HTTP://WWW.DOH.DOT.STATE.NC.US/PRECONSTRUCT/HIGHWAY/LOCATION/PROJECT/

THE FILES TO BE FOUND ARE AS FOLLOWS:

I4411_LS_GPSCALIB_030630.TXT
I4411_LS_WGS84_030630.TXT
I4411_LS_LOCAL_030630.TXT
I4411_LS_CONTROL_030630.TXT

THE WGS84 AND LOCAL FILES ARE COMMA DELIMITED AND CAN BE USED TO REPRODUCE THE SITE CALIBRATION FOR THE END USER'S GPS EQUIPMENT. IF FURTHER INFORMATION IS NEEDED, PLEASE CONTACT THE LOCATION AND SURVEYS UNIT.

PROJECT REFERENCE NO.	SHEET NO.
I-4411	2
ROADWAY DESIGN ENGINEER	PAVEMENT DESIGN ENGINEER

NORTH CAROLINA PROFESSIONAL SEAL 18904 ENGINEER GREGORY E. BREWER 10-17-06

NORTH CAROLINA PROFESSIONAL SEAL 22896 ENGINEER CLARK S. MORRISON 10/17/06

FINAL PAVEMENT DESIGN

C1	PROP. APPROX. 2" ASPHALT CONCRETE SURFACE COURSE TYPE S12.5D, AT AN AVERAGE RATE OF 224 LBS. PER SQ. YD.	E4	PROP. APPROX. 12" ASPHALT CONCRETE BASE COURSE, TYPE B25.0C, AT AN AVERAGE RATE OF 456 LBS. PER SQ. YD. IN EACH OF THREE LAYERS.
C2	PROP. APPROX. 3 " ASPHALT CONCRETE SURFACE COURSE, TYPE S9.5B, AT AN AVERAGE RATE OF 168LBS. PER SQ. YD. IN EACH OF TWO LAYERS.	E5	PROP. APPROX. 17" ASPHALT CONCRETE BASE COURSE, TYPE B25.0C, AT AN AVERAGE RATE OF 484.5 LBS. PER SQ. YD. IN EACH OF FOUR LAYERS.
C3	PROP. VAR. DEPTH ASPHALT CONCRETE SURFACE COURSE, TYPE S9.5B, AT AN AVERAGE RATE OF 112 LBS. PER SQ. YD. PER 1" DEPTH. TO BE PLACED IN LAYERS NOT TO EXCEED 1½" IN DEPTH.	E6	PROP. VAR. DEPTH ASPHALT CONCRETE BASE COURSE, TYPE B25.0C, AT AN AVERAGE RATE OF 114 LBS. PER SQ. YD. PER 1" DEPTH. TO BE PLACED IN LAYERS NOT LESS THAN 3" IN DEPTH OR GREATER THAN 5½" IN DEPTH.
C4	PROP. APPROX. 4" ASPHALT CONCRETE SURFACE COURSE TYPE S12.5D, AT AN AVERAGE RATE OF 224 LBS. PER SQ. YD. IN EACH OF TWO LAYERS.	J1	PROP. 6" AGGREGATE BASE COURSE.
D1	PROP. APPROX. 2.5 " ASPHALT CONCRETE INTERMEDIATE COURSE, TYPE I19.0D, AT AN AVERAGE RATE OF 285 LBS. PER SQ. YD.	J2	PROP. 10" AGGREGATE BASE COURSE.
D2	PROP. APPROX. 3 " ASPHALT CONCRETE INTERMEDIATE COURSE, TYPE I19.0D, AT AN AVERAGE RATE OF 342 LBS. PER SQ. YD.	J3	PROP. VAR. DEPTH AGGREGATE BASE COURSE.
D3	PROP. APPROX. 3½" ASPHALT CONCRETE INTERMEDIATE COURSE, TYPE I19.0B, AT AN AVERAGE RATE OF 399 LBS. PER SQ. YD.	P1	PRIME COAT AT THE RATE OF .35 GAL. PER SQ.YD.
D4	PROP. APPROX. 4 " ASPHALT CONCRETE INTERMEDIATE COURSE, TYPE I19.0B, AT AN AVERAGE RATE OF 456 LBS. PER SQ. YD.	R1	PROP. EXPRESSWAY GUTTER
D5	PROP. VAR. DEPTH ASPHALT CONCRETE INTERMEDIATE COURSE, TYPE I19.0B, AT AN AVERAGE RATE OF 114 LBS. PER SQ. YD. PER 1" DEPTH, TO BE PLACED IN LAYERS NOT LESS THAN 2¼" IN DEPTH OR GREATER THAN 4" IN DEPTH.	R2	PROP. 5" MONOLITHIC CONCRETE ISLAND
D6	PROP. APPROX. 4 " ASPHALT CONCRETE INTERMEDIATE COURSE, TYPE I19.0D, AT AN AVERAGE RATE OF 456 LBS. PER SQ. YD.	R3	PROP. SHOULDER BERM GUTTER
E1	PROP. APPROX. 4" ASPHALT CONCRETE BASE COURSE, TYPE B25.0C, AT AN AVERAGE RATE OF 456 LBS. PER SQ. YD.	T	EARTH MATERIAL.
E2	PROP. APPROX. 5" ASPHALT CONCRETE BASE COURSE, TYPE B25.0B, AT AN AVERAGE RATE OF 570 LBS. PER SQ. YD.	U	EXISTING PAVEMENT.
E3	PROP. VAR. DEPTH ASPHALT CONCRETE BASE COURSE, TYPE B25.0B, AT AN AVERAGE RATE OF 114 LBS. PER SQ. YD. PER 1" DEPTH. TO BE PLACED IN LAYERS NOT LESS THAN 3" IN DEPTH OR GREATER THAN 5½" IN DEPTH.	W	VARIABLE DEPTH ASPHALT PAVEMENT (SEE WEDGING DETAIL)

NOTE: PAVEMENT EDGE SLOPES ARE 1:1 UNLESS SHOWN OTHERWISE.

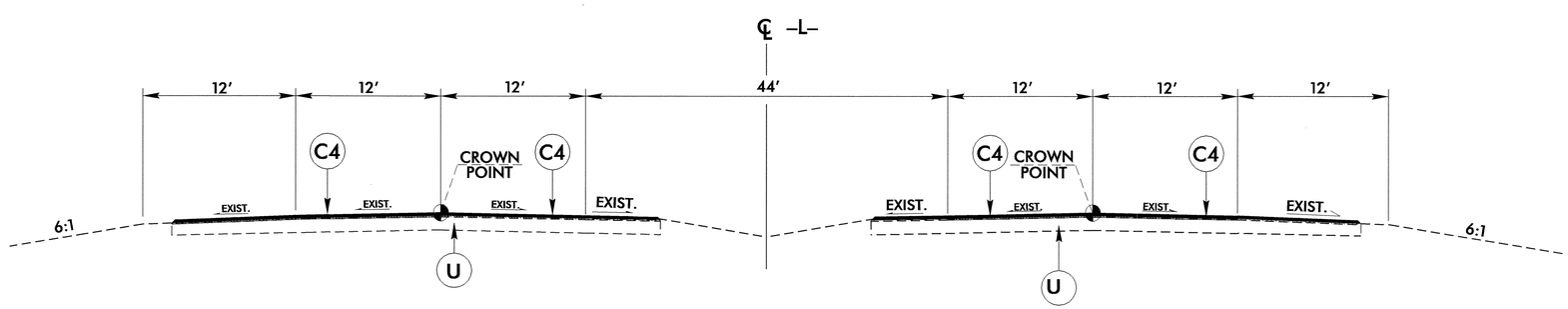

TYPICAL SECTION NO. 1

USE TYPICAL SECTION NO. 1 AS FOLLOWS:

-L- STA. 108+40.00 TO -L- STA. 130+00.00 (SBL)

6/2/99
11-OCT-2006 14:23
r:\proj\4411_rdy_typ.dgn
$$$$USERNAME$$$$

PROJECT REFERENCE NO.	SHEET NO.
I-4411	2-A
ROADWAY DESIGN ENGINEER	PAVEMENT DESIGN ENGINEER
NORTH CAROLINA PROFESSIONAL SEAL 18903 ENGINEER GREGORY E. BREW 10-17-06	NORTH CAROLINA PROFESSIONAL SEAL 22896 ENGINEER CLARK S. MORRISON 10/17/06

FINAL PAVEMENT DESIGN

C4	4" S12.5D	J2	10" ABC
D2	3" I19.0D	R1	EXPRESSWAY GUTTER
E4	12" B25.0C	T	EARTH MATERIAL
E5	17" B25.0C	U	EXISTING PAVEMENT
E6	VAR. DEPTH B25.0C		

USE TYPICAL SECTION NO. 1A AS FOLLOWS:

-L- STA. 16+00.00 TO -L- STA. 108+40.00 (SBL)

-L- STA. 18+00.00 TO -L- STA. 123+26.00 (NBL)

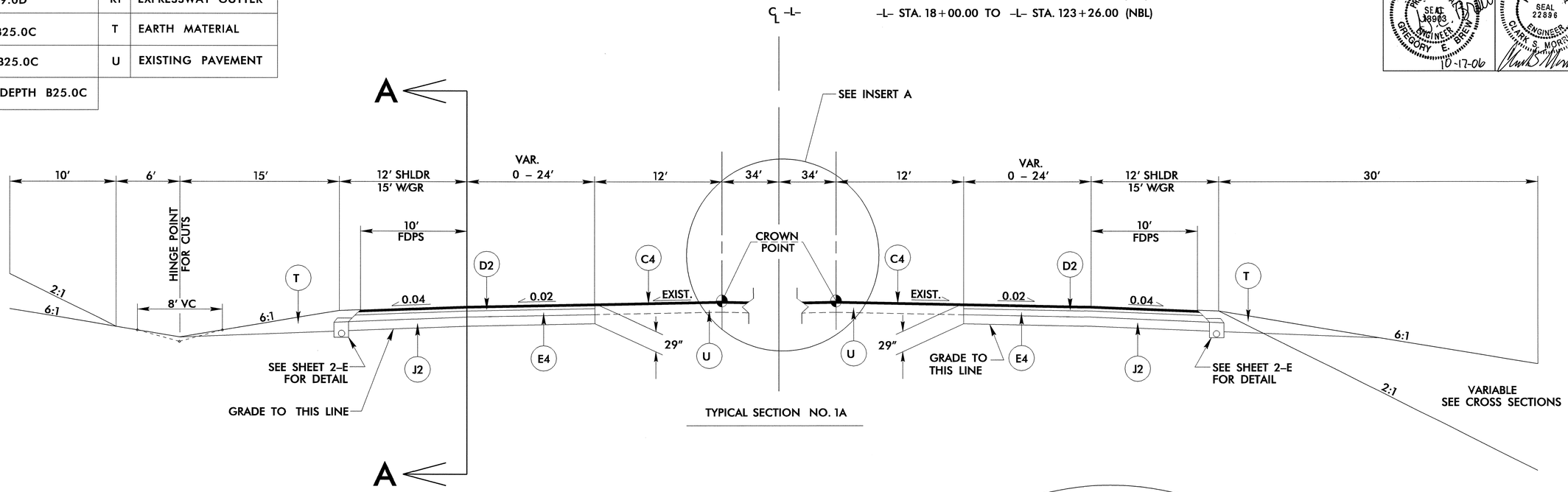

TYPICAL SECTION NO. 1A

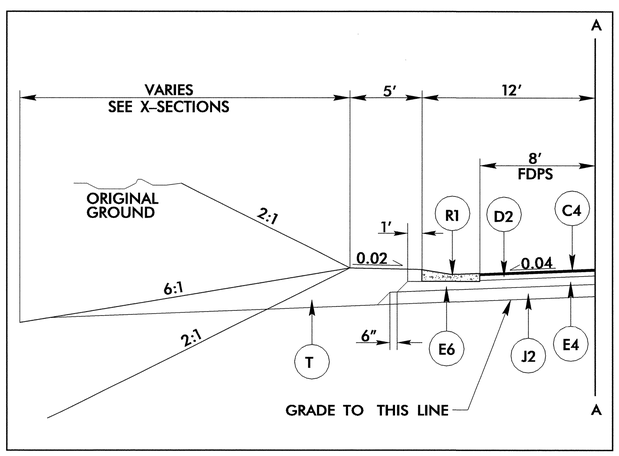

-L- STA. 65+50.00 TO 75+00.00 LT.

-L- STA. 82+00.00 TO 95+00.00 LT.

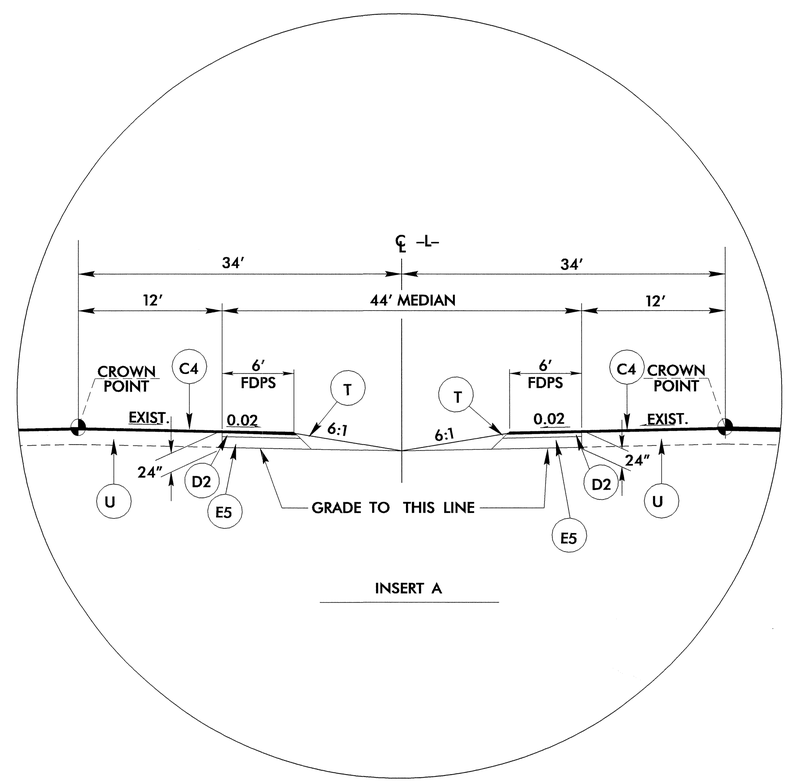

INSERT A

6/2/99

11-OCT-2006 14:23
r:\proj\14411_rdy_typ.dgn
$$$$USERNAME$$$$

PROJECT REFERENCE NO.	SHEET NO.
I-4411	2-B

ROADWAY DESIGN ENGINEER
NORTH CAROLINA PROFESSIONAL SEAL 18903 ENGINEER GREGORY E. BREW
10-17-06

PAVEMENT DESIGN ENGINEER
NORTH CAROLINA PROFESSIONAL SEAL 22886 ENGINEER CLARK S. MORRISON
10/17/06

FINAL PAVEMENT DESIGN	
C4	4" S12.5D
D2	3" I19.0D
E4	12" B25.0C
J2	10" ABC
T	EARTH MATERIAL
U	EXISTING PAVEMENT

DETAIL NO. 1A

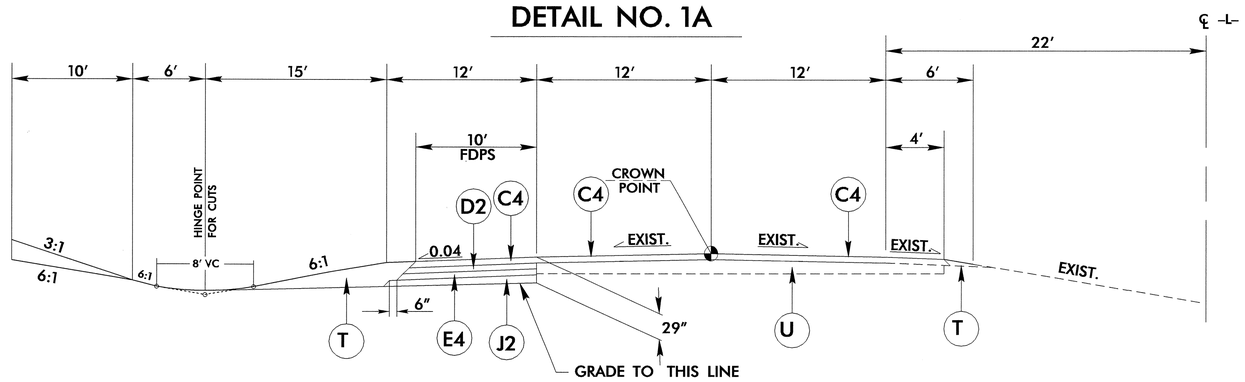

USE DETAIL NO. 1A AS FOLLOWS:
-L- STA. 14+00.00 TO 16+10.00 SBL

DETAIL NO. 1B

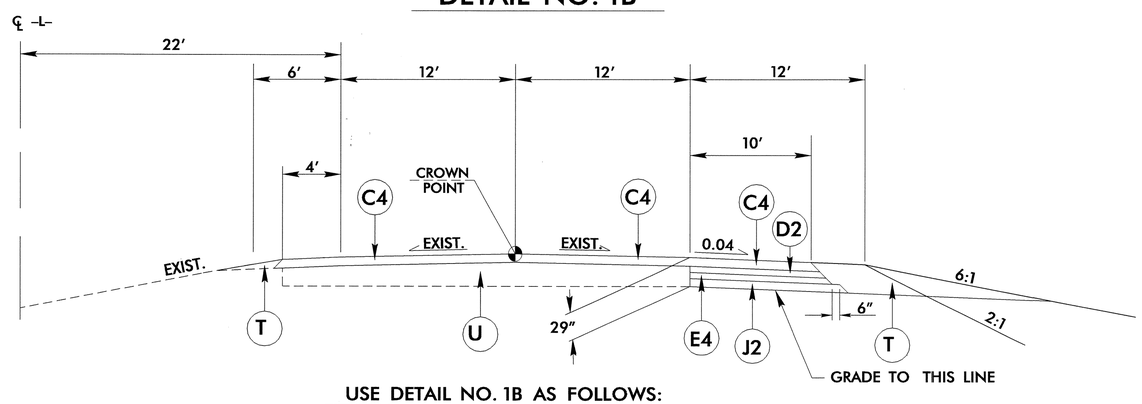

USE DETAIL NO. 1B AS FOLLOWS:
-L- STA. 15+00.00 TO 18+00.00 NBL
-L- STA. 123+26.00 TO 125+25.00 NBL

6/2/99

11-OCT-2006 14:23
r:\roadway\proj\i4411_sup.dgn
$$$$USERNAME$$$$

6/2/99

FINAL PAVEMENT DESIGN	
C2	3 " S9.5B
C3	VAR. DEPTH S9.5B
D4	4" I19.0B
D5	VAR. DEPTH I19.0B
J2	10" ABC
R2	CONC. ISLAND
T	EARTH MATERIAL
U	EXISTING PAVEMENT
W	WEDGING

PROJECT REFERENCE NO.	SHEET NO.
1-4411	2-C
ROADWAY DESIGN ENGINEER	PAVEMENT DESIGN ENGINEER

NORTH CAROLINA PROFESSIONAL SEAL 18803 ENGINEER GREGORY E. BREWER 5-23-05

NORTH CAROLINA PROFESSIONAL SEAL 22836 ENGINEER CLARK S. MORRISON 5/19/05

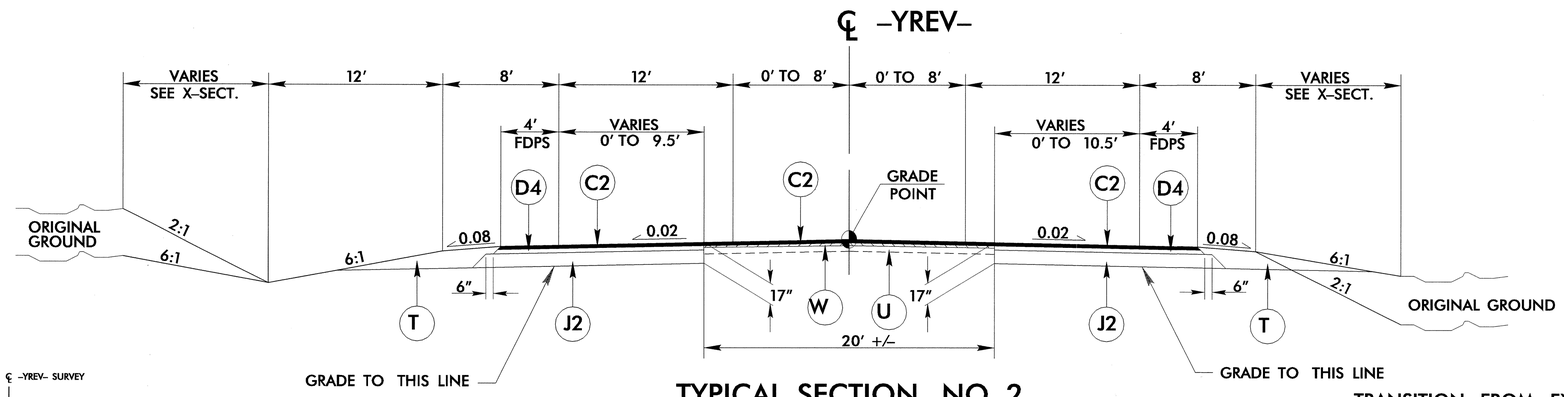

TYPICAL SECTION NO. 2

TRANSITION FROM EXISTING TO T.S. NO. 2
-YREV- STA. 11+00.00 TO 12+00.00

USE TYPICAL SECTION NO. 2 AS FOLLOWS:
-YREV- STA. 12+00.00 TO 17+00.00

TRANSITION FROM T.S. NO. 2 TO T.S. NO. 3
-YREV- STA. 17+00.00 TO 17+80.00

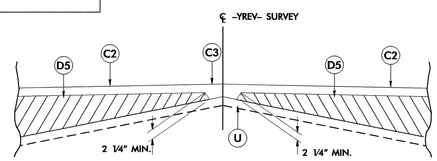

Detail Showing Method of Wedging

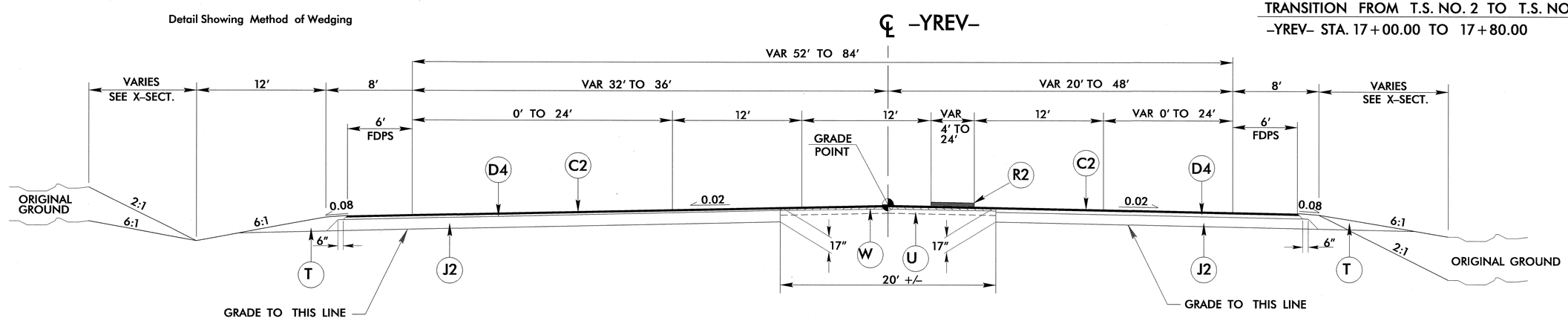

TYPICAL SECTION NO. 3

USE TYPICAL SECTION NO. 3 AS FOLLOWS:
-YREV- STA. 17+81.28 TO 22+06.28

TRANSITION FROM T.S. NO. 3 TO T.S. NO. 4
-YREV- STA. 22+06.28 TO 23+30.00

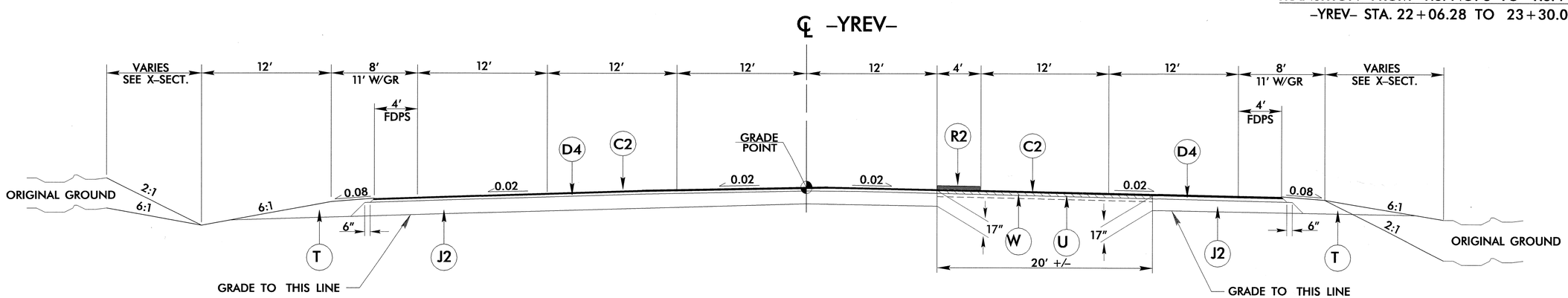

TYPICAL SECTION NO. 4

USE TYPICAL SECTION NO. 4 AS FOLLOWS:
-YREV- STA. 23+30.00 TO 24+50.00

16-MAY-2005 08:24
R:\Proj\1441_rdy_typ.dgn
wakebbavis AT RD214495

PROJECT REFERENCE NO.	SHEET NO.
I-4411	2-D
ROADWAY DESIGN ENGINEER	PAVEMENT DESIGN ENGINEER

NORTH CAROLINA PROFESSIONAL SEAL 19903 ENGINEER GREGORY E. BREWER 3-11-05

NORTH CAROLINA PROFESSIONAL SEAL 22896 ENGINEER CLARK S. MORRISON 3/4/05

FINAL PAVEMENT DESIGN			
C2	3" S9.5B	T	EARTH MATERIAL
D4	4 " I19.0B	U	EXISTING PAVEMENT
J2	10" ABC	W	WEDGING
R2	CONC. ISLAND		

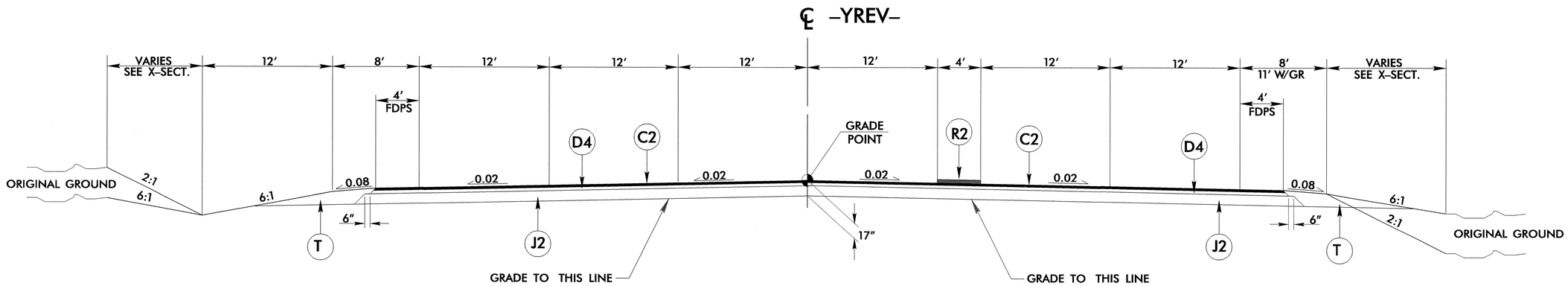

TYPICAL SECTION NO. 5

USE TYPICAL SECTION NO. 5 AS FOLLOWS:

-YREV- STA. 24+50 TO 27+49.20 (BEGIN BRIDGE)

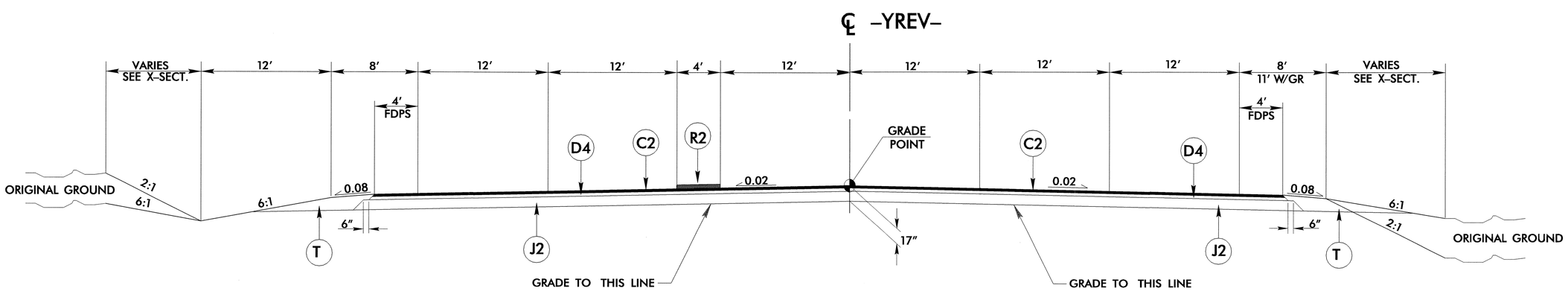

TYPICAL SECTION NO. 6

USE TYPICAL SECTION NO. 6 AS FOLLOWS:

-YREV- STA. 30+50.20 (END BRIDGE) TO 34+00.00

TRANSITION FROM T.S. NO. 6 TO T.S. NO. 7

-YREV- STA. 34+00.00 TO 35+00.00

6/2/99
04-MAR-2005 10:52
R:\Roadway\I4411_rd01.dgn
WALCOUSUS ATT00001

FINAL PAVEMENT DESIGN	
C2	3" S9.5B
C4	4" S12.5D
D2	3" I19.0D
D4	4" I19.0B
E4	12" B25.0C
J2	10" ABC
R2	CONC. ISLAND
T	EARTH MATERIAL
U	EXISTING PAVEMENT
W	WEDGING

PROJECT REFERENCE NO.	SHEET NO.
I-4411	2-E
ROADWAY DESIGN ENGINEER	PAVEMENT DESIGN ENGINEER

NORTH CAROLINA PROFESSIONAL SEAL 18903 ENGINEER GREGORY E. BREW 10-17-06

NORTH CAROLINA PROFESSIONAL SEAL 22896 ENGINEER CLARK S. MORRISON 10/17/06

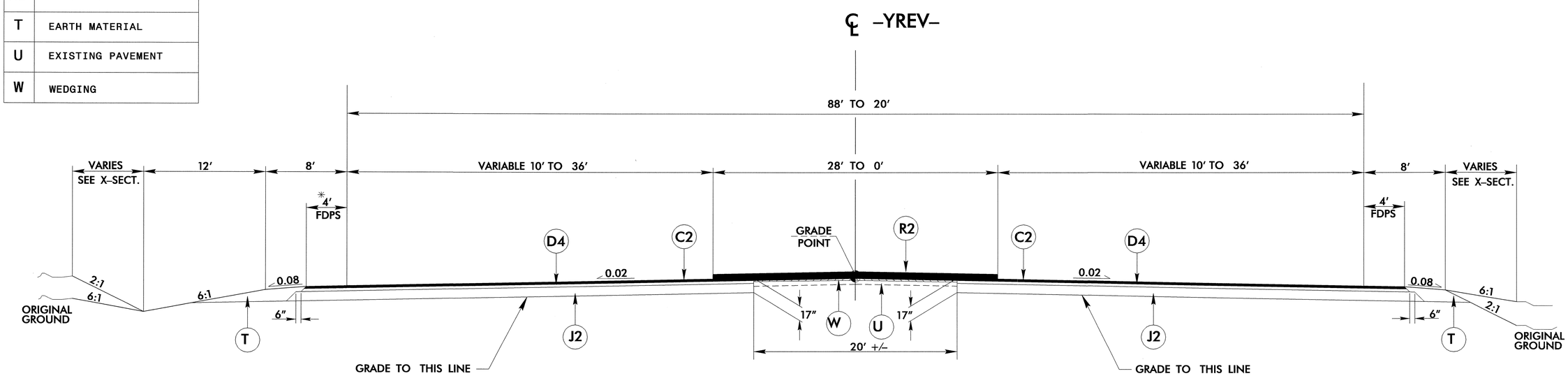

TYPICAL SECTION NO. 7

*NOTE: USE 6' PAVED SHOULDER FROM -YREV- STA. 35+74.00 TO 40+74.00 LT. SEE PLANS

USE TYPICAL SECTION NO. 7 AS FOLLOWS:
-YREV- STA. 35+00.00 TO 48+00.00

TRANSITION FROM T.S. NO. 7 TO END
-YREV- STA. 48+00.00 TO 48+62.72

SHOULDER DRAIN DETAIL

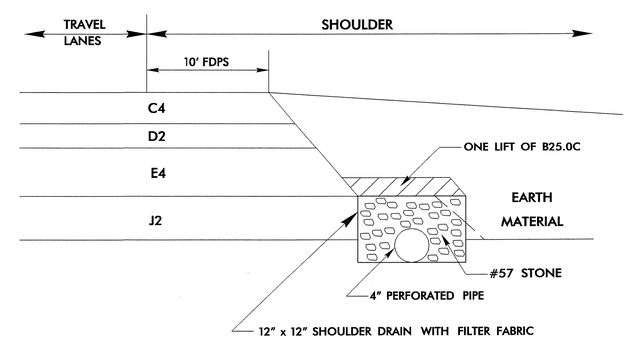

SEE SHEET 3-I FOR LOCATIONS

6/2/99

11-OCT-2006 14:23
r:\proj\14411_rdy_typ.dgn
$$$$USERNAME$$$$

PROJECT REFERENCE NO.	SHEET NO.
I-4411	2-F
ROADWAY DESIGN ENGINEER	PAVEMENT DESIGN ENGINEER

NORTH CAROLINA PROFESSIONAL SEAL 18903 ENGINEER GREGORY E. BREW 11-17-06

NORTH CAROLINA PROFESSIONAL SEAL 22896 ENGINEER CLARK S. MORRISON 11/16/06

FINAL PAVEMENT DESIGN	
C2	3" S9.5B
D3	3½" I19.0B
E2*	5" B25.0B
J2	10" ABC
T	EARTH MATERIAL
U	EXISTING PAVEMENT
W	WEDGING

℄ RAMP A

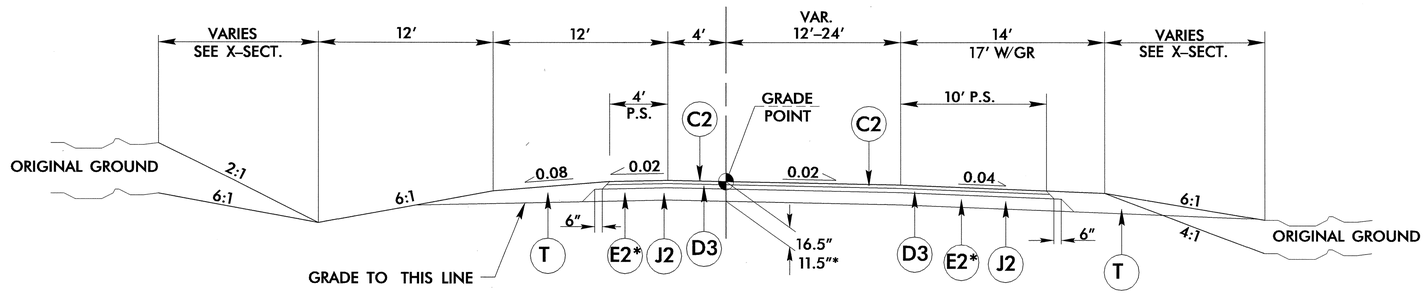

TYPICAL SECTION NO. 8

USE TYPICAL SECTION NO. 8 AS FOLLOWS:

–RPA– STA. 14+80.00 TO 27+29.36

* ALTERNATE PAVEMENT SCHEDULE

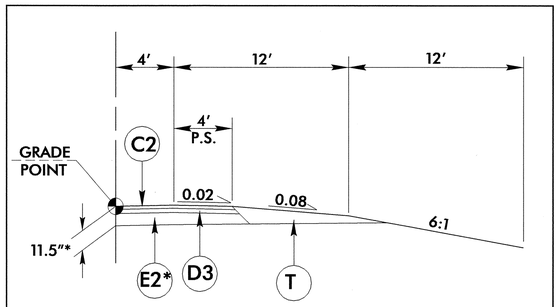

DATAIL SHOWING ALTERNATE PAVEMENT FOR RAMPS

℄ RAMP B

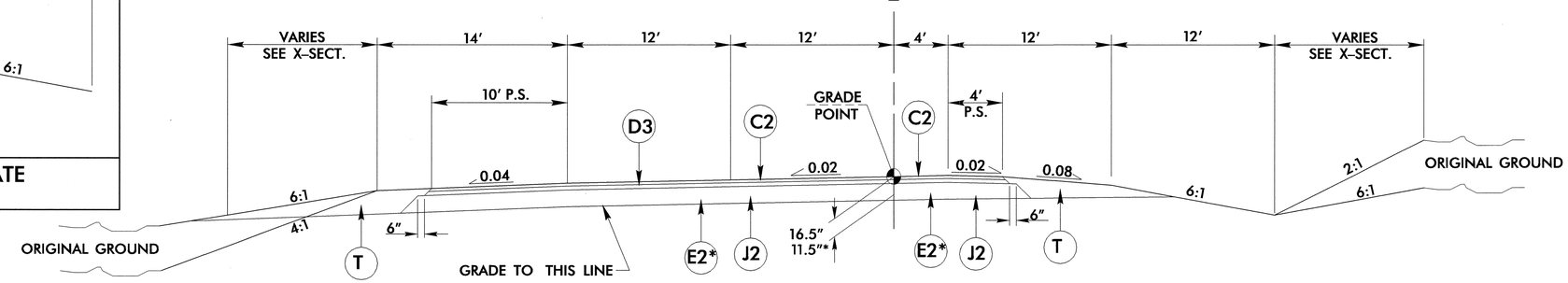

TYPICAL SECTION NO. 9

USE TYPICAL SECTION NO. 9 AS FOLLOWS:

–RPB– STA. 14+00.00 TO 22+75.21

* ALTERNATE PAVEMENT SCHEDULE

℄ RAMP C

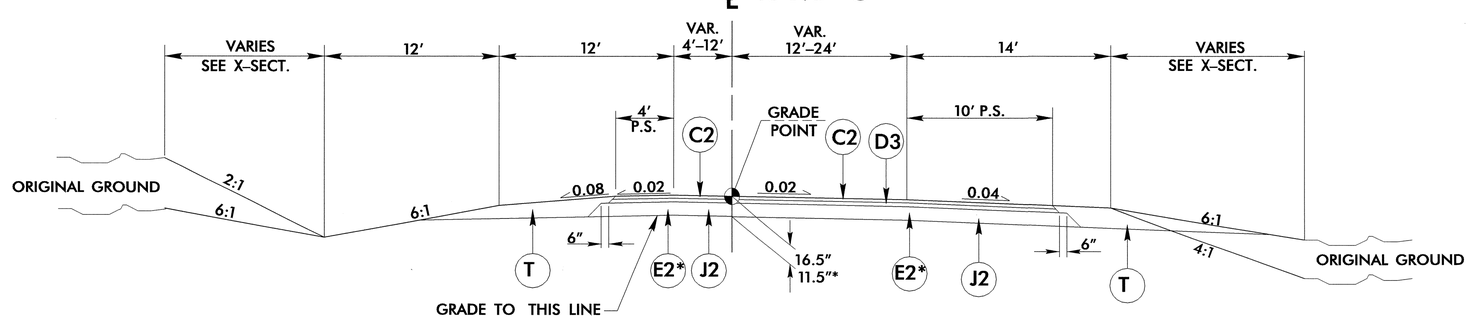

TYPICAL SECTION NO. 10

USE TYPICAL SECTION NO. 10 AS FOLLOWS:

–RPC– STA. 14+00.00 TO 27+72.95

* ALTERNATE PAVEMENT SCHEDULE

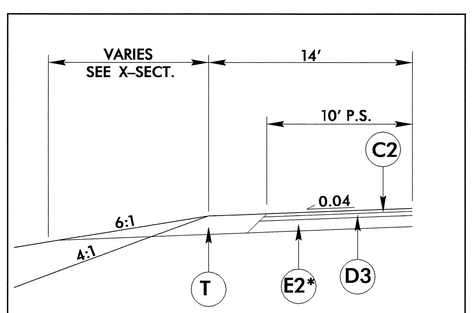

DATAIL SHOWING ALTERNATE PAVEMENT FOR RAMPS

6/2/99

09-NOV-2006 09:06
s:\$$$$USERNAME$$$$\$$$$up.dgn

PROJECT REFERENCE NO.	SHEET NO.
I-4411	2-G
ROADWAY DESIGN ENGINEER	PAVEMENT DESIGN ENGINEER

NORTH CAROLINA PROFESSIONAL SEAL 18903 ENGINEER GREGORY E. GREW 11-17-06

NORTH CAROLINA PROFESSIONAL SEAL 22896 ENGINEER CLARK S. MORRISON 11/16/06

℄ RAMP D

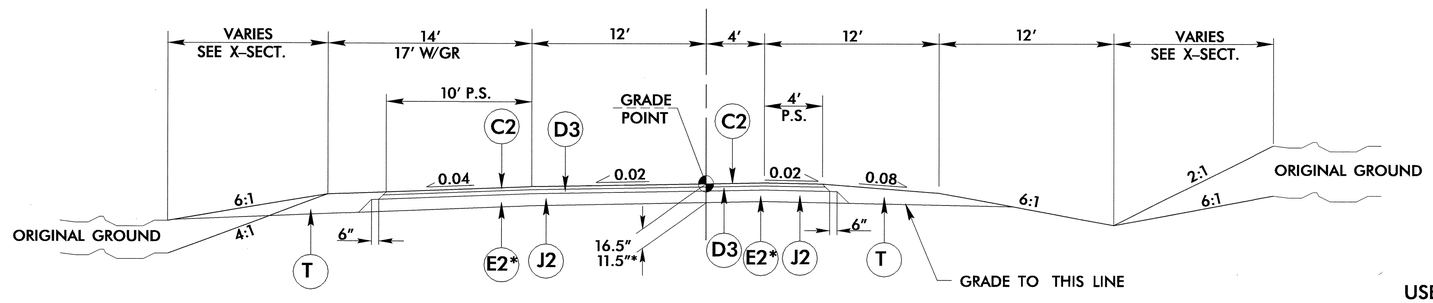

TYPICAL SECTION NO. 11

USE TYPICAL SECTION NO. 11 AS FOLLOWS:

–RPD– STA. 13+30.00 TO 18+08.37

* ALTERNATE PAVEMENT SCHEDULE

℄ SERVICE ROADS A, B, & C

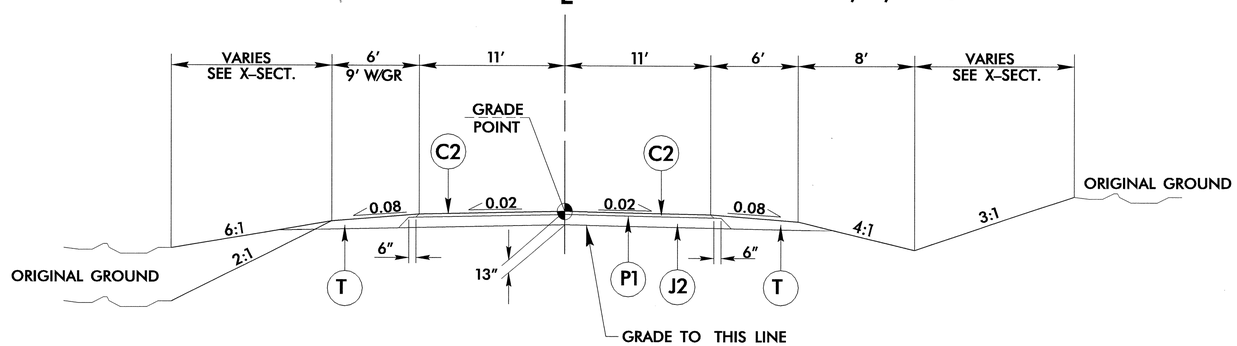

TYPICAL SECTION NO. 12

USE TYPICAL SECTION NO. 12 AS FOLLOWS:

–SRA– STA. 10+61.81 TO 30+00.00

–SRB– STA. 10+49.88 TO 22+00.00

–SRC– STA. 11+03.75 TO 34+50.00

℄ SERVICE ROADS A, B, & C

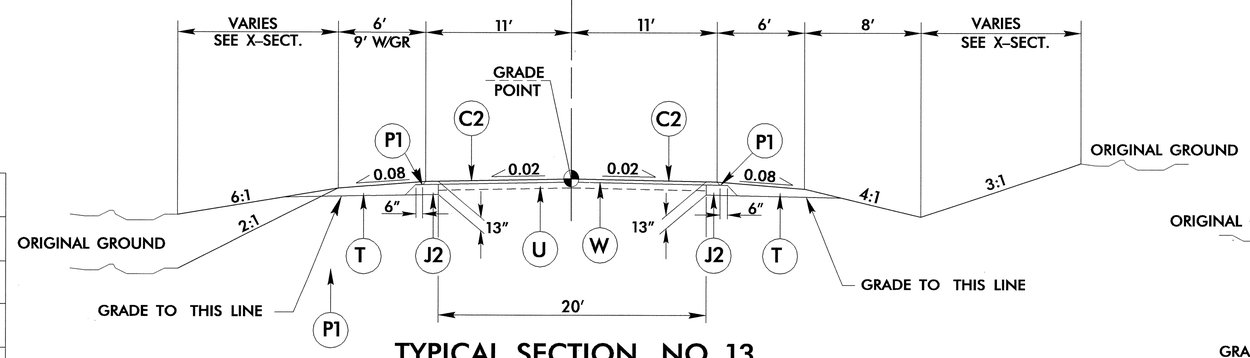

TYPICAL SECTION NO. 13

USE TYPICAL SECTION NO. 13 AS FOLLOWS:

–SRA– STA. 30+00.00 TO 33+75.00

–SRB– STA. 22+00.00 TO 25+00.00

–SRC– STA. 34+50.00 TO 38+00.00

℄ DRIVEWAY 1

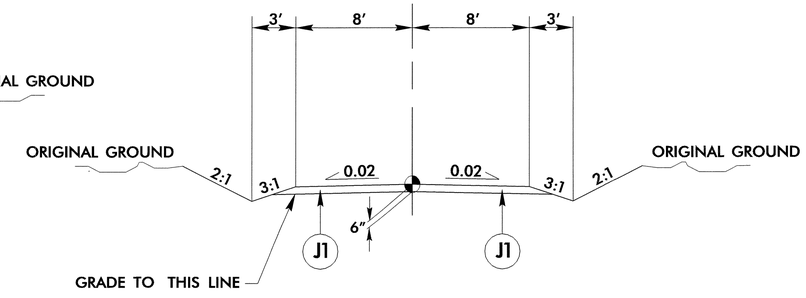

TYPICAL SECTION NO. 14

USE TYPICAL SECTION NO. 14 AS FOLLOWS:

–DRW– STA. 10+21. TO 11+41.00

FINAL PAVEMENT DESIGN	
C2	3″ S9.5B
D3	3½″ I19.0B
E2*	5″ B25.0B
J1	6″ ABC
J2	10″ ABC
P1	PRIME COAT
T	EARTH MATERIAL
U	EXISTING PAVEMENT

6/2/99
09-NOV-2006 09:06
F:\proj\4411_pdt_tup.dgn
$$$$USERNAME$$$$

PROJECT REFERENCE NO.	SHEET NO.
1-4411	2-H

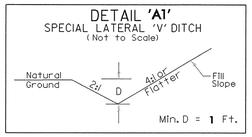

-L- STA 21+00 TO STA 22+50 (RT)
-YREV- STA 39+50 (LT) TO STA 41+50 (LT)
-SRC- STA 35+50 (RT) TO STA 37+00 (RT)
-RPD- STA 14+50 (RT) TO STA 18+50 (RT)

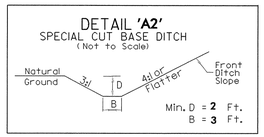

-L- STA 28+50 TO STA 30+50 (RT)
-L- STA 33+50 TO STA 37+00 (RT)

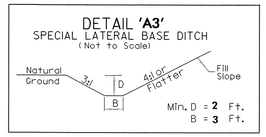

-L- STA 28+00 TO STA 28+50 (RT)
-L- STA 30+50 TO STA 33+50 (RT)

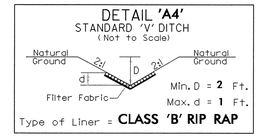

-L- STA 28+23 TO STA 28+40 (RT)

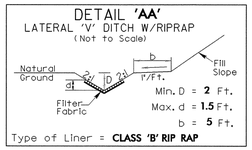

-L- STA 100+50 (RT) to -L- STA 101+75 (RT)

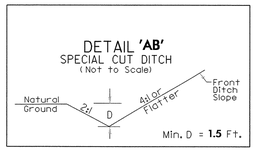

-SRA- STA 28+00 (LT) TO STA 28+50 (LT)
-SRA- STA 28+50 (RT) TO STA 29+00 (RT)
-SRC- STA 11+50 (RT) TO STA 12+00 (RT)
-SRC- STA 27+00 (RT) TO STA 28+50 (RT)
-SRC- STA 31+00 (RT) TO STA 32+50 (RT)
-SRC- STA 27+50 (LT) TO STA 29+50 (LT)
-SRC- STA 31+00 (LT) TO STA 37+50 (LT)
-YREV- STA 36+50 (RT) TO STA 39+00 (RT)

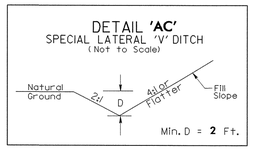

-SRC- STA 12+00 (RT) TO STA 17+45 (RT)
-SRC- STA 21+00 (RT) TO STA 26+50 (RT)
-SRC- STA 29+00 (RT) TO STA 30+50 (RT)
-SRC- STA 33+00 (RT) TO STA 34+00 (RT)
-SRC- STA 30+00 (LT) TO STA 30+50 (LT)
-RPC- STA 26+00 (RT) TO STA 28+00 (RT)
-RPC- STA 21+50 (LT) TO STA 22+50 (LT)
-RPD- STA 15+50 (LT) TO STA 18+50 (LT)

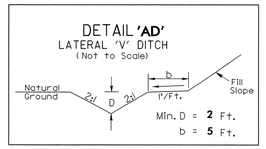

-YREV- STA 32+50 (LT) TO STA 34+00 (LT)
-YREV- STA 35+50 (LT) TO STA 36+75 (LT)
-SRC- STA 17+80 (RT) TO STA 21+00 (RT)

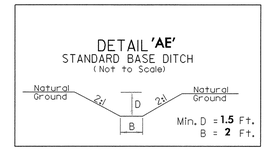

-SRC- STA 23+15 (LT)

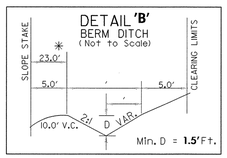

-L- STA 72+00 (RT) TO STA 75+00 (RT)

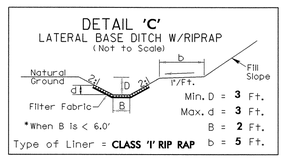

-L- STA 75+00 (RT) TO STA 75+40 (RT)

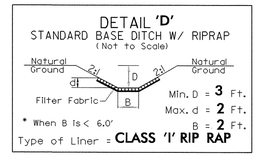

-L- STA 85+30 TO STA 85+45 (RT)

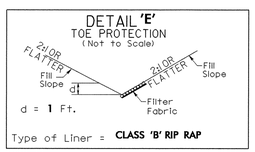

-YREV- STA 24+30 (LT) TO STA 27+75 (LT)
-RPA- STA 19+00 (LT) TO STA 21+00 (LT)

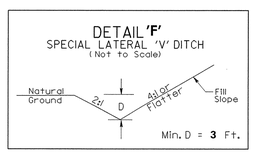

-YREV- STA 35+50 (RT) TO STA 36+50 (RT)

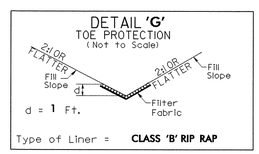

-RPD- STA 10+20 (LT) TO STA 15+00 (LT)

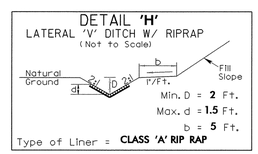

-SRB- STA 18+00 (LT) TO STA 19+00 (LT)

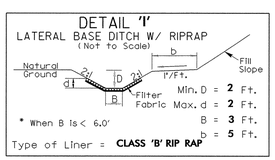

-SRB- STA 19+00 (LT) TO STA 19+75 (LT)

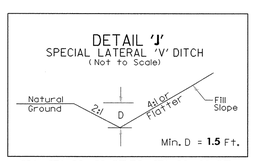

-SRA- STA 28+50 (LT) TO STA 29+00 (LT)
-SRB- STA 19+25 (RT) TO STA 19+75 (RT)

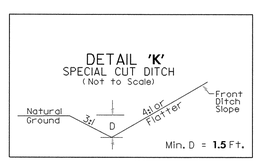

-SRA- STA 14+00 (LT) TO STA 16+00 (LT)
-SRA- STA 14+00 (RT) TO STA 16+00 (RT)

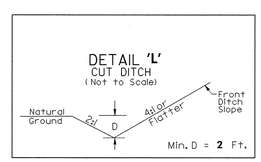

-SRA- STA 18+50 (LT) TO STA 19+50 (LT)

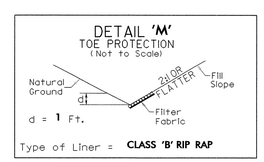

-SRA- STA 18+00 (LT) TO STA 18+50 (LT)
-SRA- STA 22+00 (RT) TO STA 23+50 (RT)
-SRA- STA 22+00 (LT) TO STA 23+50 (LT)
-RPA- STA 19+00 (LT) TO STA 21+00 (LT)

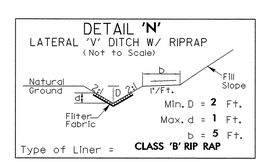

-SRA- STA 24+00 (LT) TO STA 26+50 (LT)

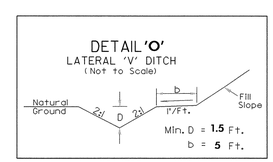

-SRA- STA 24+00 (RT) TO STA 26+50 (RT)
-RPA- STA 19+00 (RT) TO STA 21+00 (RT)

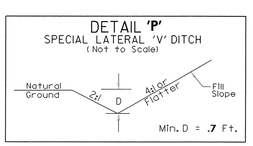

-YREV- STA 39+50 (RT) TO STA 41+00 (RT)

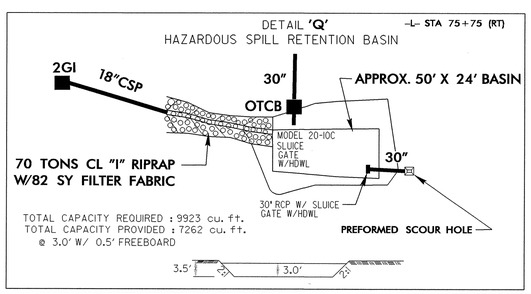

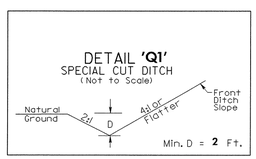

-YREV- STA 37+00 (LT) TO STA 39+00 (LT)
-YREV- STA 42+50 (RT) TO STA 45+00 (RT)

NORTH CAROLINA PROFESSIONAL SEAL 18983 ENGINEER GREGORY E. BRENT
3-11-05

6/2/99

04-MAR-2005 10:54
R:\Roadway\Proj\4411_Rwy_dtr.dgn
Wakelbdavis AY-RD214495

FINAL PAVEMENT DESIGN	
C2	3 " S9.5B
C4	4" S12.5D
D2	3" I19.0D
D3	3½" I19.0B
D4	4" I19.0B
E2*	5" B25.0B
E3*	VAR. DEPTH B25.0B
E4	12" B25.0C
J2	10" ABC
J3	VAR. DEPTH ABC
P1	PRIME COAT
R3	SHOULDER BERM GUTTER STD 846.01
T	EARTH MATERIAL

PROJECT REFERENCE NO.	SHEET NO.
I-4411	2-1
ROADWAY DESIGN ENGINEER	PAVEMENT DESIGN ENGINEER

NORTH CAROLINA PROFESSIONAL SEAL 18903 ENGINEER GREGORY E. BREWER
10-17-06

NORTH CAROLINA PROFESSIONAL SEAL 22896 ENGINEER CLARK S. MORRISON
10/17/06

Details Showing Shoulder Berm Gutter

–L–

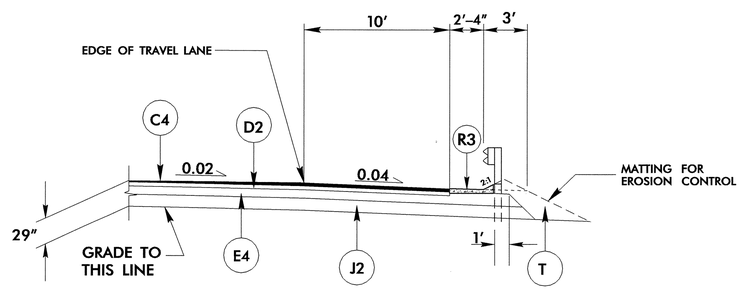

USE WITH TYPICAL SECTION NO. 1A

–L– STA. 64+00.00 TO 65+50.00 (NBL)
–L– STA. 94+00.00 TO 99+50.00 (NBL)

–YREV–

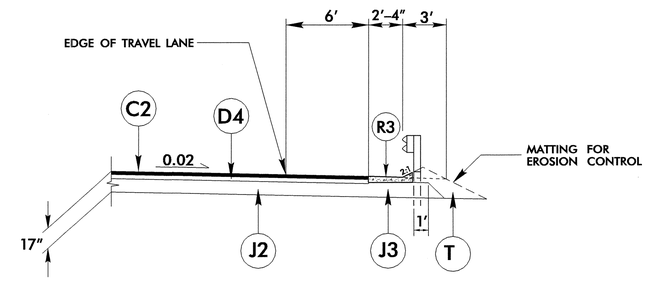

USE WITH TYPICAL SECTIONS NO. 4, 5, & 6

–YREV– STA. 24+25.00 TO 27+51.00 (LT)
–YREV– STA. 26+60.00 TO 26+70.00 (RT)
–YREV– STA. 30+48.00 TO 32+85.00 (RT)
–YREV– STA. 31+29.00 TO 33+30.00 (LT)

RAMPS A & D

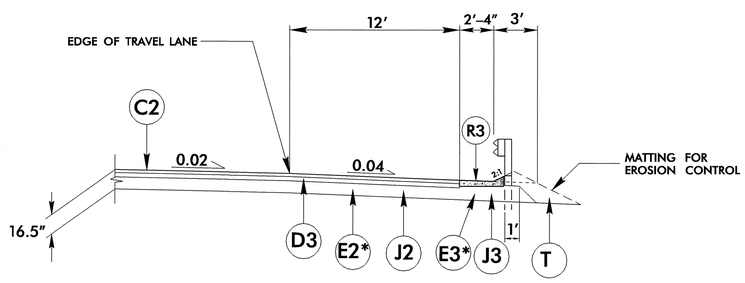

USE WITH TYPICAL SECTIONS NO. 8 & 11

–RPA– STA. 19+00.00 TO 21+50.00 (RT)
–RPD– STA. 10+00.00 TO 15+00.00 (LT)
* ALTERNATE PAVEMENT SCHEDULE

SERVICE ROAD A

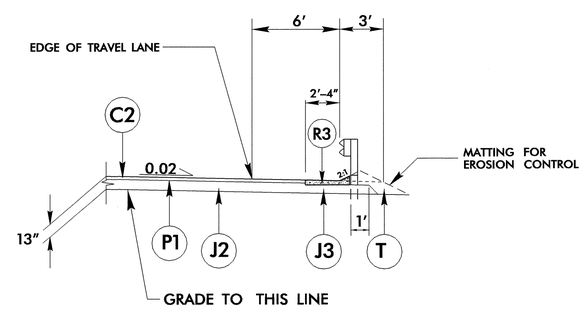

USE WITH TYPICAL SECTION NO. 12

–SRA– STA. 22+30.00 TO 26+20.00 (LT)

6/2/99
11-OCT-2006 14:23
s:\structures\i-4411_sr_typ.dgn
$$$$USERNAME$$$$

PROJECT REFERENCE NO.	SHEET NO.
I-4411	2-J

FINAL OUTSIDE PAVEMENT DESIGN	
C1	2" S12.5D AT AVE. RATE OF 224 LBS. PER SQ. YD.
D6	4" I19.0D AT AVE. RATE OF 456 LBS. PER SQ. YD.
E1	4" B25.0C AT AVE. RATE OF 456 LBS. PER SQ. YD.
T	EARTH MATERIAL

NORTH CAROLINA PROFESSIONAL SEAL 18901 ENGINEER GREGORY E. BREW
3-11-05

DETAIL FOR OUTSIDE TEMPORARY PAVEMENT (SEE TRAFFIC CONTROL PLANS)

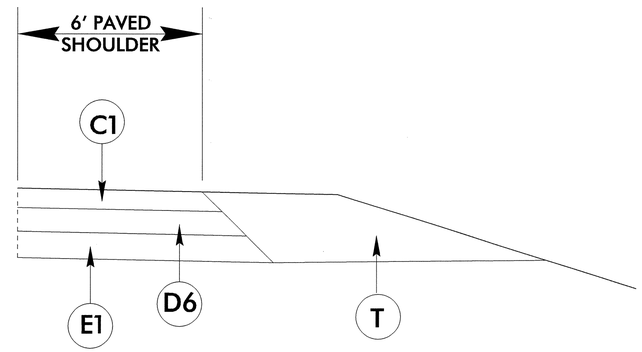

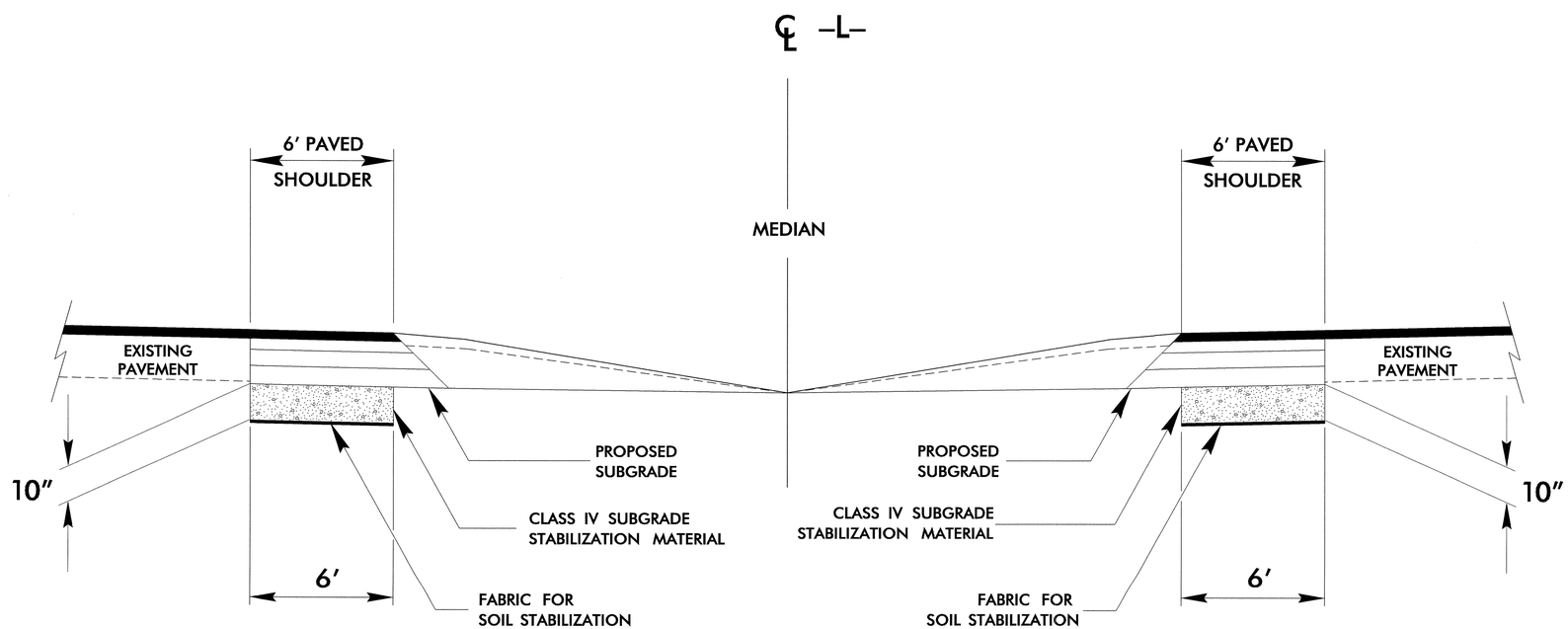

DETAIL SHOWING UNDERCUT FOR INSIDE SHOULDERS -L- STA. 20+00.00 TO -L- STA. 50+00.00

6/2/99

04-MAR-2005 10:56
r:\proj\14411_rdy_tup.dgn
WAKebiDavis AT RD214495

PROJECT REFERENCE NO.	SHEET NO.
I-4411	2-K

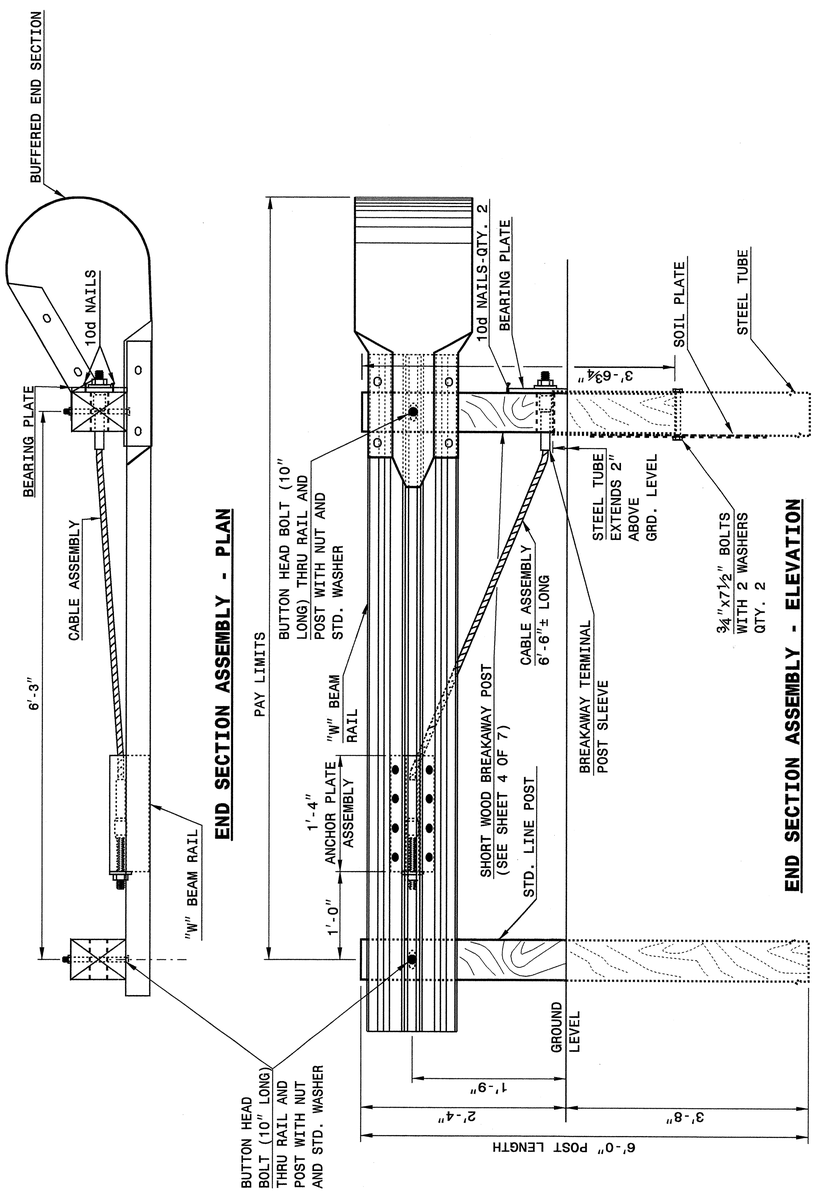

STATE OF NORTH CAROLINA
DEPT. OF TRANSPORTATION
DIVISION OF HIGHWAYS
RALEIGH, N.C.

ENGLISH DETAIL DRAWING FOR
GUARDRAIL INSTALLATION

SHEET 1 OF 7
862D02

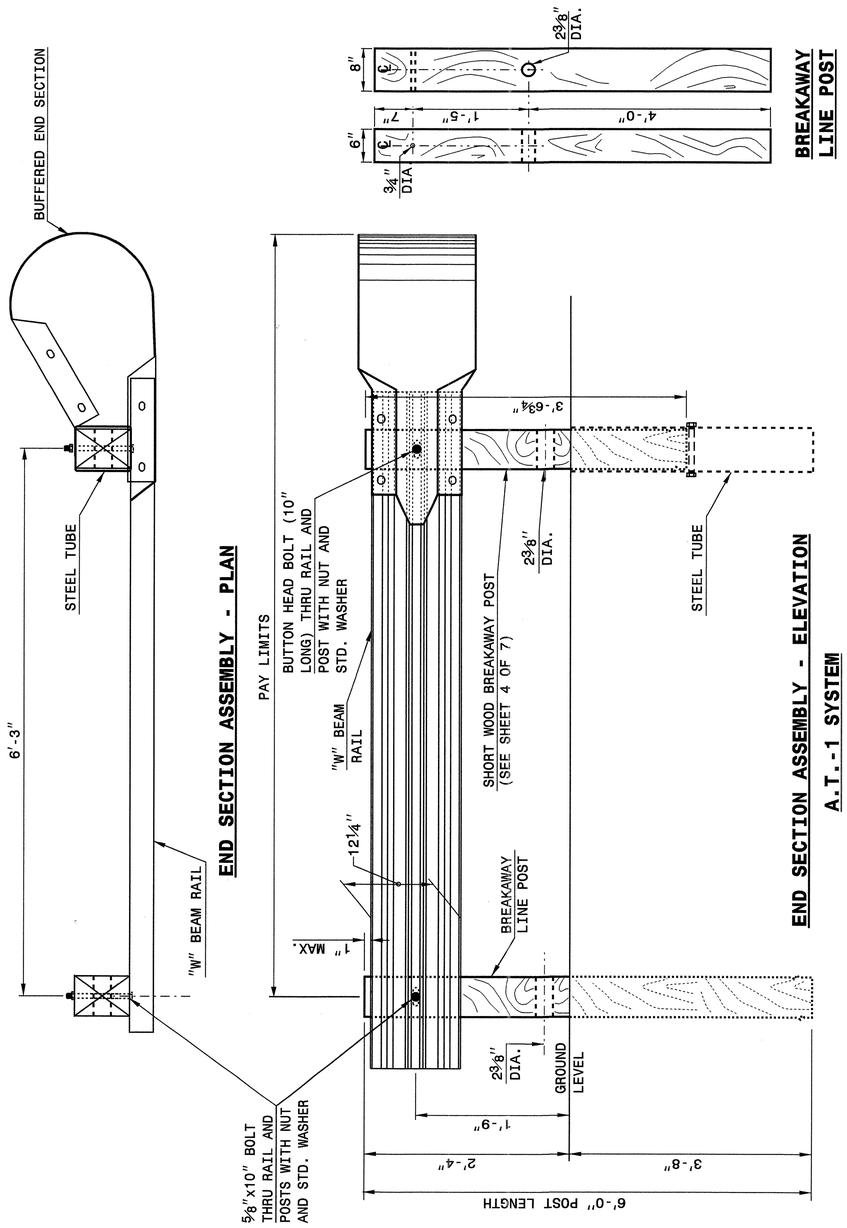

STATE OF NORTH CAROLINA
DEPT. OF TRANSPORTATION
DIVISION OF HIGHWAYS
RALEIGH, N.C.

ENGLISH DETAIL DRAWING FOR
GUARDRAIL INSTALLATION

SHEET 2 OF 7
862D02

STATE OF
NORTH CAROLINA
DEPT. OF TRANSPORTATION
DIVISION OF HIGHWAYS
RALEIGH, N.C.

ENGLISH DETAIL DRAWING FOR
GUARDRAIL INSTALLATION

SHEET 1 OF 7
862D02

STATE OF
NORTH CAROLINA
DEPT. OF TRANSPORTATION
DIVISION OF HIGHWAYS
RALEIGH, N.C.

ENGLISH DETAIL DRAWING FOR
GUARDRAIL INSTALLATION

SHEET 2 OF 7
862D02

NORTH CAROLINA PROFESSIONAL SEAL 022966 ENGINEER JOEL S. HOWERTON
5/24/05

PROJECT SERVICES UNIT
STANDARDS AND SPECIAL DESIGN
Office 919-250-4128 FAX 919-250-4119

SEE PLATE FOR TITLE

ORIGINAL BY: 2002 STD.862.02 DATE:
MODIFIED BY: E.E. WARD DATE: 02-09-03
CHECKED BY: DATE: 10/21/04
FILE SPEC.: /usr/stds/02todetail/english/86202/862d02.dgn

19-OCT-2004 11:38
W:\Special Details\ericward\stds\02' Stds to Special Details\english\86202\0862d02.dgn
ericward AT DS212260

19-OCT-2004 11:39
W:\Special Details\ericward\stds\02' Stds to Special Details\english\86202\0862d02.dgn
ericward AT DS212260

STATE OF NORTH CAROLINA
DEPT. OF TRANSPORTATION
DIVISION OF HIGHWAYS
RALEIGH, N.C.

ENGLISH DETAIL DRAWING FOR
GUARDRAIL INSTALLATION

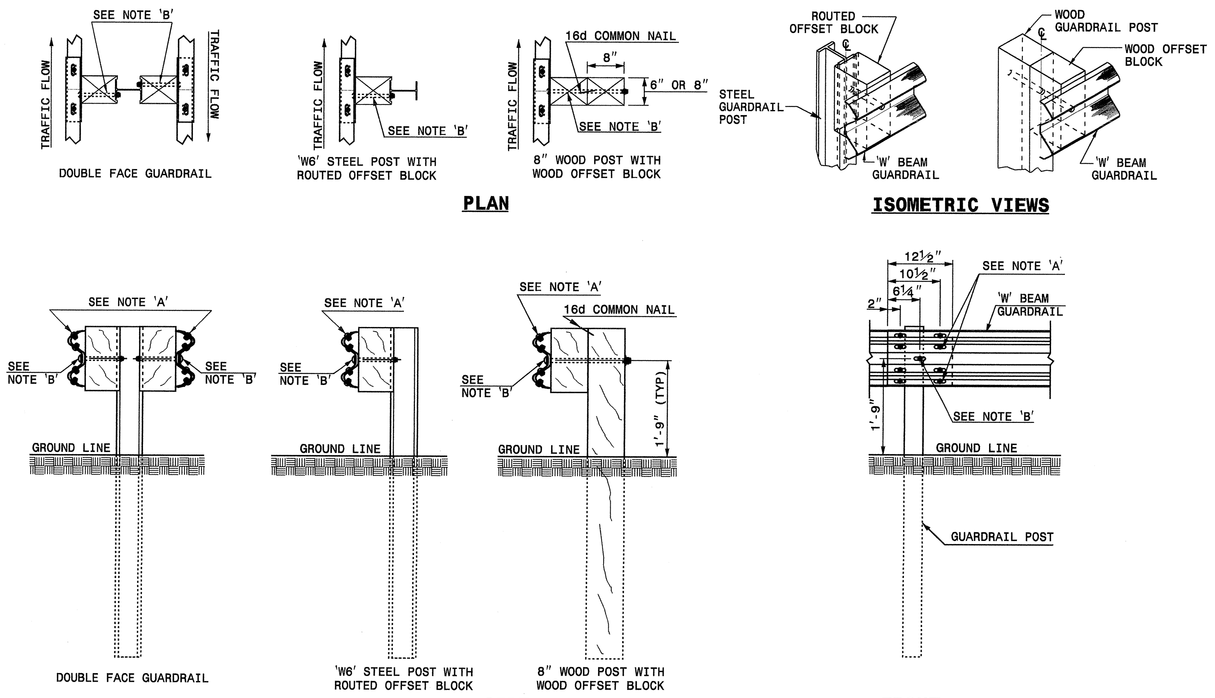

NOTES:
A - ⅝" DIA. BUTTON HEAD SPLICE BOLT 1¼" LONG (8 REQ. PER SPLICE JOINT).
B - ⅝" DIA. BUTTON HEAD BOLT 7½"/9" LONG WITH NUT FOR BOLTING 6"/8" ROUTED OFFSET BLOCK TO STEEL POSTS OR ⅝" DIA. BUTTON HEAD BOLT 18" LONG WITH STD. WASHER UNDER NUT FOR BOLTING TO WOOD POSTS (1 REQ. PER LOCATION)
C - FIELD PUNCHING OF HOLES INTO GUARDRAIL SHALL BE AS DIRECTED BY THE ENGINEER.

TYPICAL GUARDRAIL AND GUARDRAIL POST ALTERNATIVES

SHEET 3 OF 7
862D02

STATE OF NORTH CAROLINA
DEPT. OF TRANSPORTATION
DIVISION OF HIGHWAYS
RALEIGH, N.C.

ENGLISH DETAIL DRAWING FOR
GUARDRAIL INSTALLATION

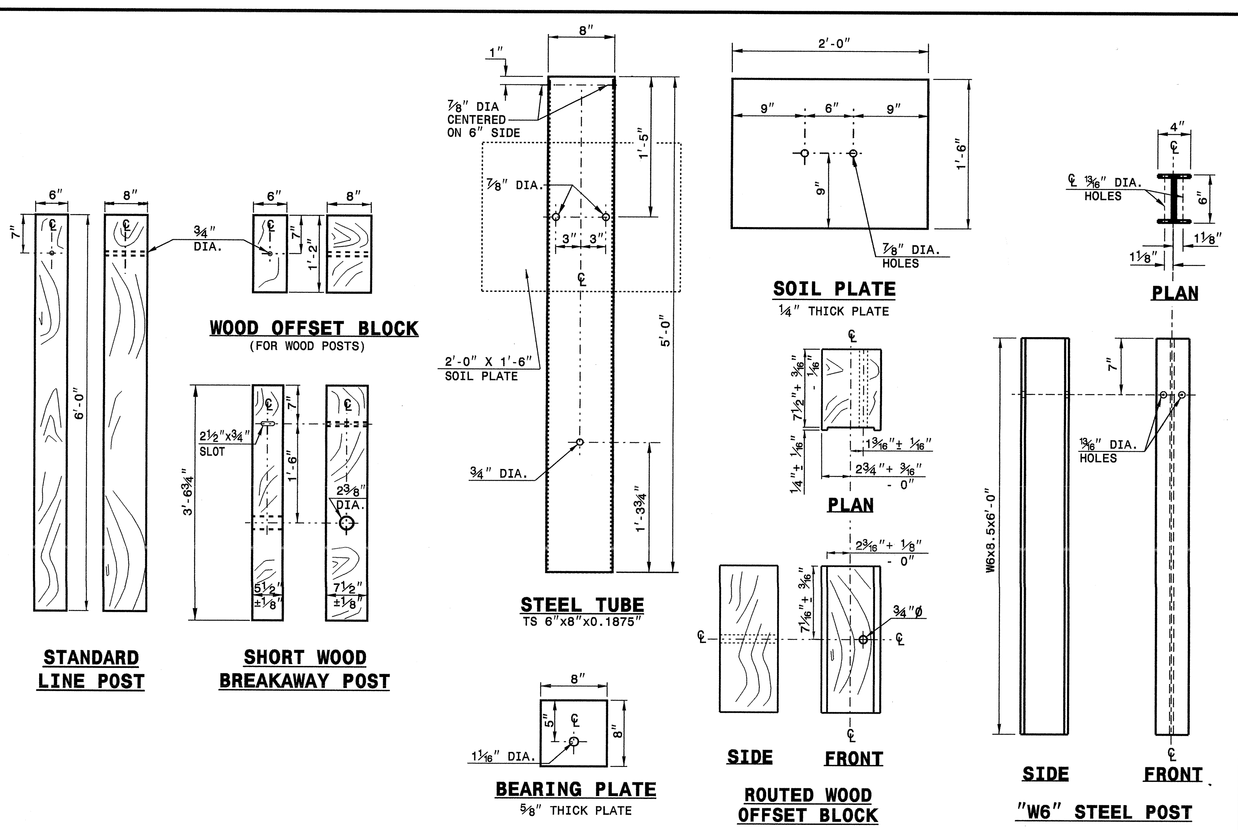

SYSTEM PARTS

SHEET 4 OF 7
862D02

STATE OF NORTH CAROLINA
DEPT. OF TRANSPORTATION
DIVISION OF HIGHWAYS
RALEIGH, N.C.

ENGLISH DETAIL DRAWING FOR
GUARDRAIL INSTALLATION

PROJECT SERVICES UNIT
STANDARDS AND SPECIAL DESIGN
Office 919-250-4128 FAX 919-250-4119

SEE PLATE FOR TITLE

ORIGINAL BY: 2002 STD. 862.02 DATE:
MODIFIED BY: E.E. WARD DATE: 02-09-03
CHECKED BY: DATE: 10/21/04
FILE SPEC.: /usr/stds/02todetail/english/86202/862d02.dgn

NORTH CAROLINA PROFESSIONAL SEAL 022966 ENGINEER JOEL HOWERTON
5/24/05

PROJECT REFERENCE NO. I-4411
SHEET NO. 2-L

STATE OF NORTH CAROLINA
DEPT. OF TRANSPORTATION
DIVISION OF HIGHWAYS
RALEIGH, N.C.

ENGLISH DETAIL DRAWING FOR
GUARDRAIL INSTALLATION

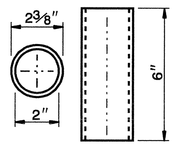

BREAKAWAY TERMINAL POST SLEEVE

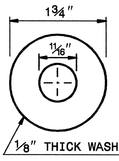

DETAIL OF STANDARD WASHER

STANDARD WASHER: TYPICAL USE UNDER NUT WITH WOOD POST

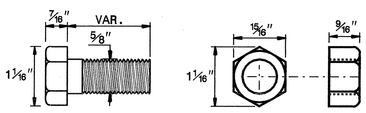

DETAIL OF STANDARD HEX BOLT AND NUT

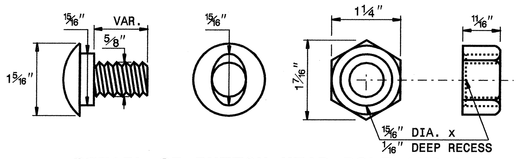

DETAIL OF BUTTON HEAD BOLT AND NUT

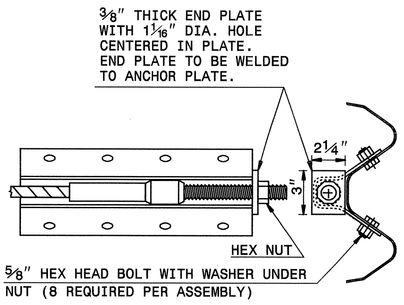

ANCHOR PLATE ASSEMBLY

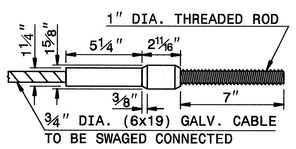

SWAGED CABLE

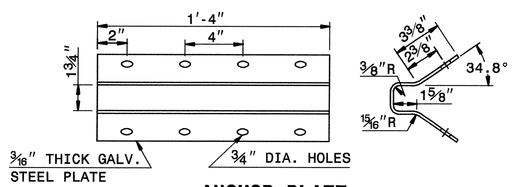

ANCHOR PLATE

CABLE ASSEMBLY

SHEET 5 OF 7
862D02

SYSTEM PARTS

STATE OF NORTH CAROLINA
DEPT. OF TRANSPORTATION
DIVISION OF HIGHWAYS
RALEIGH, N.C.

ENGLISH DETAIL DRAWING FOR
GUARDRAIL INSTALLATION

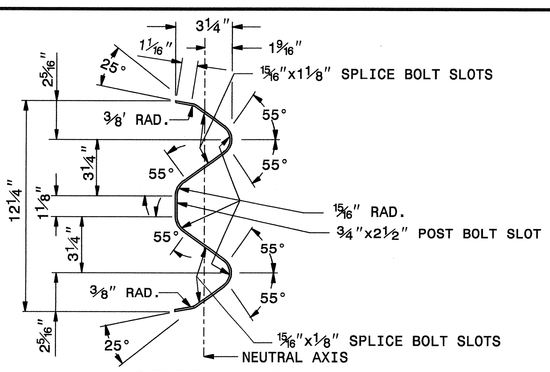

SECTION X-X

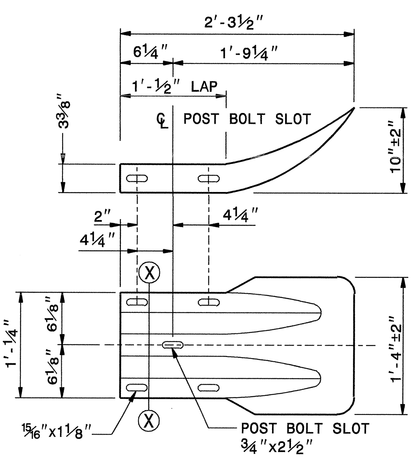

TERMINAL END SECTION

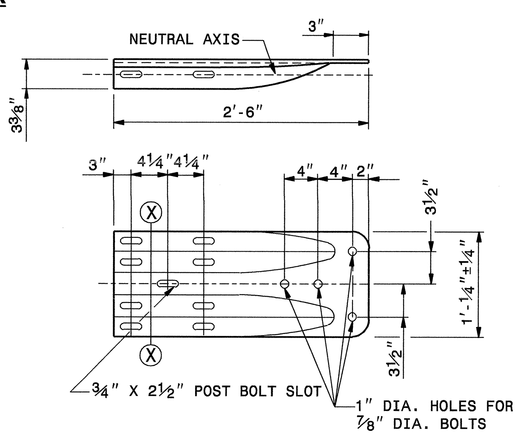

TYPICAL END SHOE

SHEET 6 OF 7
862D02

SYSTEM PARTS - GENERAL USE

STATE OF NORTH CAROLINA
DEPT. OF TRANSPORTATION
DIVISION OF HIGHWAYS
RALEIGH, N.C.

ENGLISH DETAIL DRAWING FOR
GUARDRAIL INSTALLATION

SHEET 5 OF 7
862D02

SHEET 6 OF 7
862D02

PROJECT SERVICES UNIT
STANDARDS AND SPECIAL DESIGN
Office 919-250-4128 FAX 919-250-4119

SEE PLATE FOR TITLE

ORIGINAL BY: 2002 STD.862.02 DATE: 02-09-03
MODIFIED BY: ERICWARD DATE: 10-19-04
CHECKED BY: DATE:
FILE SPEC.: \ENG\stds\02\ordetail\english\86202\0862d02.dgn

NORTH CAROLINA PROFESSIONAL ENGINEER SEAL 025196 JOEL E. HOUPTON
5/24/05

PROJECT REFERENCE NO. I-4411
SHEET NO. 2-M

PROJECT REFERENCE NO.	SHEET NO.
I-4411	2-N

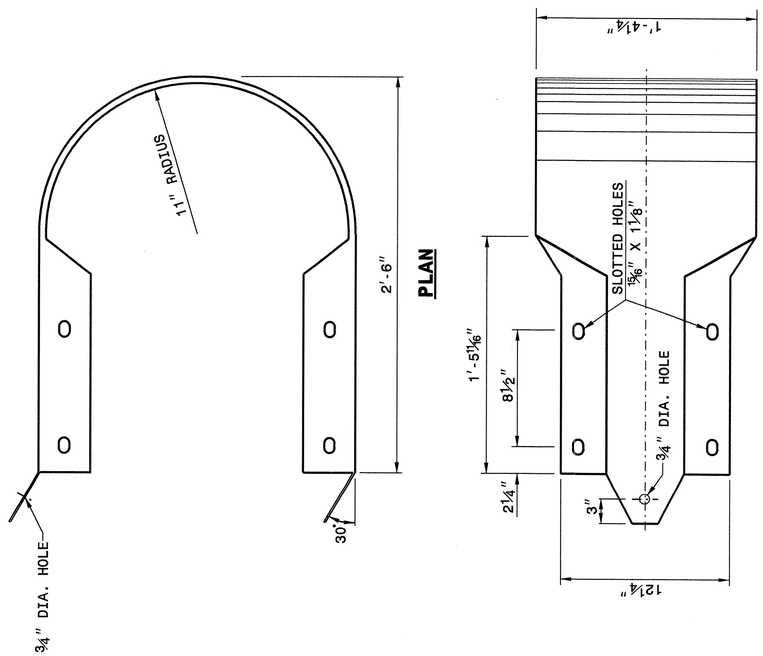

STATE OF NORTH CAROLINA DEPT. OF TRANSPORTATION DIVISION OF HIGHWAYS RALEIGH, N.C.	ENGLISH DETAIL DRAWING FOR **GUARDRAIL INSTALLATION**	SHEET 7 OF 7 **862D02**

STATE OF NORTH CAROLINA DEPT. OF TRANSPORTATION DIVISION OF HIGHWAYS RALEIGH, N.C.

ENGLISH DETAIL DRAWING FOR **GUARDRAIL INSTALLATION**

SHEET 7 OF 7 **862D02**

NORTH CAROLINA PROFESSIONAL SEAL 022966 ENGINEER JOEL S. HOWARTON

5/24/05

PROJECT SERVICES UNIT
STANDARDS AND SPECIAL DESIGN
Office 919-250-4128 FAX 919-250-4119

SEE PLATE FOR TITLE

ORIGINAL BY: 2002 STD.862.02 DATE:
MODIFIED BY: E.E. WARD DATE: 02-09-03
CHECKED BY: DATE: 10/21/04
FILE SPEC.: /usr/stds/02todetail/english/86202/862d02.dgn

19-OCT-2004 11:39
W:\Special Details\ericward\stds\02 Stds to Special Details\english\86202\0862d02.dgn
ericward AT DS212260

21-SEP-2005 09:34
S:\Contracts\Contracts\Special Details\ericward\stds\02' Stds to Special Details\english\862D3\0862d03.dgn
ericward AT PS222293

STATE OF NORTH CAROLINA
DEPT. OF TRANSPORTATION
DIVISION OF HIGHWAYS
RALEIGH, N.C.

ENGLISH DETAIL DRAWING FOR
STRUCTURE ANCHOR UNITS
GUARDRAIL ANCHOR UNIT, TYPE III FOR ATTACHMENT TO RAIL ON BRIDGE (15' MINIMUM LENGTH APPROACH SLAB)

SHEET 1 OF 6
862D03

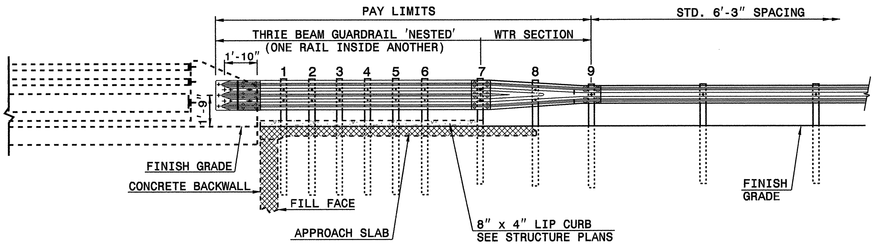

ELEVATION

NOTE:
**POST NOT REQUIRED FOR SKEW ANGLES GREATER THAN 150° OR LESS THAN 30° UNLESS OTHERWISE DIRECTED BY THE ENGINEER.
*THE DISTANCE FROM END OF BRIDGE RAIL TO CENTER LINE OF THE FIRST POST SHOULD BE 11½" IF CONCRETE BACKWALL IS NOT PRESENT.
-SHOULDER BERM GUTTER MUST BE INSTALLED TO THE LIMITS 8" x 4" LIP CURB IS SHOWN IF ANCHOR UNIT IS NOT ADJACENT TO AN APPROACH SLAB.
-MEASURE GUARDRAIL HEIGHT FROM THE TOP OF ADJACENT SURFACE (SHOULDER, BERM, OR GUTTER).
-LAP JOINTS IN THE DIRECTION OF TRAFFIC FLOW.
-SEE SHEET 5 FOR POST SECTIONS 1 THRU 9.

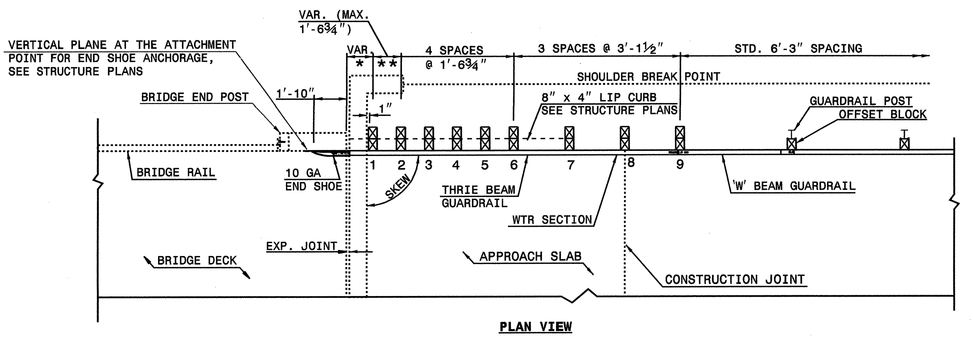

PLAN VIEW

GUARDRAIL ANCHOR UNIT, TYPE III FOR ATTACHMENT TO RAIL ON BRIDGE (15' MINIMUM LENGTH APPROACH SLAB)

STATE OF NORTH CAROLINA
DEPT. OF TRANSPORTATION
DIVISION OF HIGHWAYS
RALEIGH, N.C.

ENGLISH DETAIL DRAWING FOR
STRUCTURE ANCHOR UNITS
GUARDRAIL ANCHOR UNIT, TYPE III FOR ATTACHMENT TO RAIL ON BRIDGE (15' MINIMUM LENGTH APPROACH SLAB)

SHEET 1 OF 6
862D03

STATE OF NORTH CAROLINA
DEPT. OF TRANSPORTATION
DIVISION OF HIGHWAYS
RALEIGH, N.C.

ENGLISH DETAIL DRAWING FOR
STRUCTURE ANCHOR UNITS
GUARDRAIL ANCHOR UNIT, TYPE III FOR ATTACHMENT TO RAIL ON BRIDGE (25' MINIMUM LENGTH APPROACH SLAB)

SHEET 2 OF 6
862D03

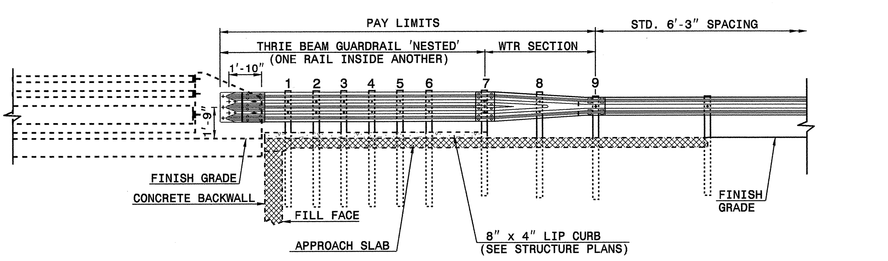

ELEVATION

NOTE:
**POST NOT REQUIRED FOR SKEW ANGLES GREATER THAN 150° OR LESS THAN 30° UNLESS OTHERWISE DIRECTED BY THE ENGINEER.
*THE DISTANCE FROM END OF BRIDGE RAIL TO CENTER LINE OF THE FIRST POST SHOULD BE 11½" IF CONCRETE BACKWALL IS NOT PRESENT.
-SHOULDER BERM GUTTER MUST BE INSTALLED TO THE LIMITS 8" x 4" LIP CURB IS SHOWN IF ANCHOR UNIT IS NOT ADJACENT TO AN APPROACH SLAB.
-MEASURE GUARDRAIL HEIGHT FROM THE TOP OF ADJACENT SURFACE (SHOULDER, BERM, OR GUTTER).
-LAP JOINTS IN THE DIRECTION OF TRAFFIC FLOW.
-SEE SHEET 5 FOR POST SECTIONS 1 THRU 9.

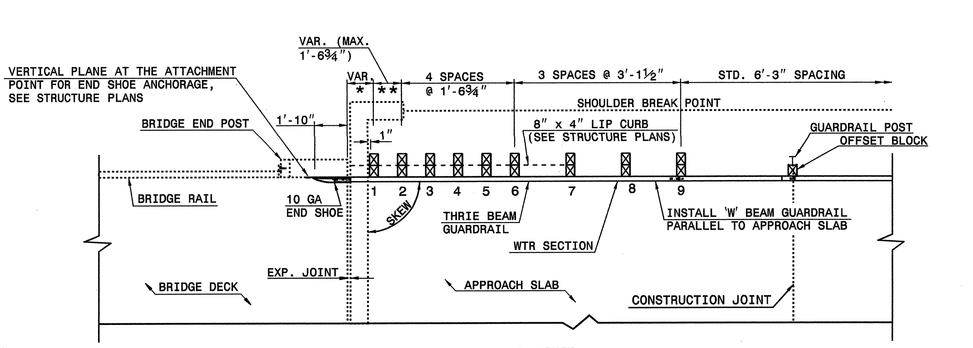

PLAN VIEW

GUARDRAIL ANCHOR UNIT, TYPE III FOR ATTACHMENT TO RAIL ON BRIDGE (25' MINIMUM LENGTH APPROACH SLAB)

STATE OF NORTH CAROLINA
DEPT. OF TRANSPORTATION
DIVISION OF HIGHWAYS
RALEIGH, N.C.

ENGLISH DETAIL DRAWING FOR
STRUCTURE ANCHOR UNITS
GUARDRAIL ANCHOR UNIT, TYPE III FOR ATTACHMENT TO RAIL ON BRIDGE (25' MINIMUM LENGTH APPROACH SLAB)

SHEET 2 OF 6
862D03

PROJECT SERVICES UNIT
STANDARDS AND SPECIAL DESIGN
Office 919-250-4128 FAX 919-250-4119

ORIGINAL BY: 2002 STANDARDS DATE: 01-15-02
MODIFIED BY: E.E. WARD DATE: 09-14-05
CHECKED BY: DATE: 3/6/06
FILE SPEC.: s:\stds/02stdstd/details/english/862d03.dgn

SEE PLATE FOR TITLE

NORTH CAROLINA PROFESSIONAL SEAL 025196 ENGINEER JOHN SAMUEL HAMPTON
3/2/06

PROJECT REFERENCE NO. I-4411
SHEET NO. 2-0

21-SEP-2005 09:34
S:\Contracts\Contracts\Special Details\ericward\stds\02' Stds to Special Details\english\86203\0862d03.dgn
ericward AT PS222293

STATE OF NORTH CAROLINA
DEPT. OF TRANSPORTATION
DIVISION OF HIGHWAYS
RALEIGH, N.C.

ENGLISH DETAIL DRAWING FOR
STRUCTURE ANCHOR UNITS
GUARDRAIL ANCHOR UNIT, TYPE III FOR ATTACHMENT TO
RAIL ON APPROACH SLAB (15' MINIMUM LENGTH APPROACH SLAB)

SHEET 3 OF 6
862D03

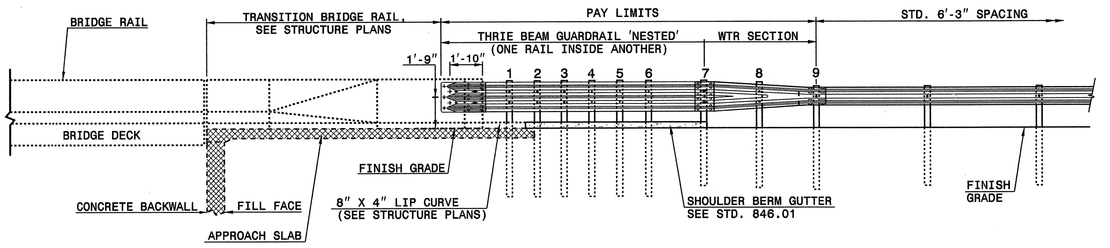

ELEVATION

NOTE:
-SHOULDER BERM GUTTER MUST BE INSTALLED TO THE LIMITS 8" x 4" LIP CURB IS SHOWN IF ANCHOR UNIT IS NOT ADJACENT TO AN APPROACH SLAB.
-MEASURE GUARDRAIL HEIGHT FROM THE TOP OF ADJACENT SURFACE (SHOULDER, BERM, OR GUTTER).
-LAP JOINTS IN THE DIRECTION OF TRAFFIC FLOW.
-SEE SHEET 5 FOR POST SECTIONS 1 THRU 9.

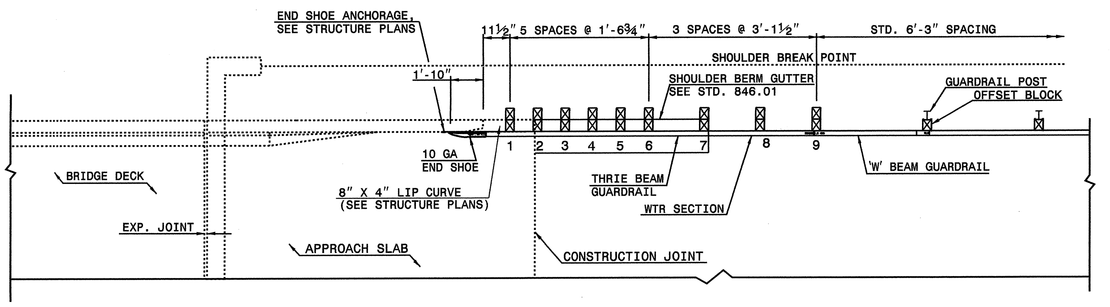

PLAN VIEW

GUARDRAIL ANCHOR UNIT, TYPE III FOR ATTACHMENT TO RAIL ON APPROACH SLAB (15' MINIMUM LENGTH APPROACH SLAB)

STATE OF NORTH CAROLINA
DEPT. OF TRANSPORTATION
DIVISION OF HIGHWAYS
RALEIGH, N.C.

ENGLISH DETAIL DRAWING FOR
STRUCTURE ANCHOR UNITS
GUARDRAIL ANCHOR UNIT, TYPE III FOR ATTACHMENT TO
RAIL ON APPROACH SLAB (15' MINIMUM LENGTH APPROACH SLAB)

SHEET 3 OF 6
862D03

STATE OF NORTH CAROLINA
DEPT. OF TRANSPORTATION
DIVISION OF HIGHWAYS
RALEIGH, N.C.

ENGLISH DETAIL DRAWING FOR
STRUCTURE ANCHOR UNITS
GUARDRAIL ANCHOR UNIT, TYPE III FOR ATTACHMENT TO
RAIL ON APPROACH SLAB (25' MINIMUM LENGTH APPROACH SLAB)

SHEET 4 OF 6
862D03

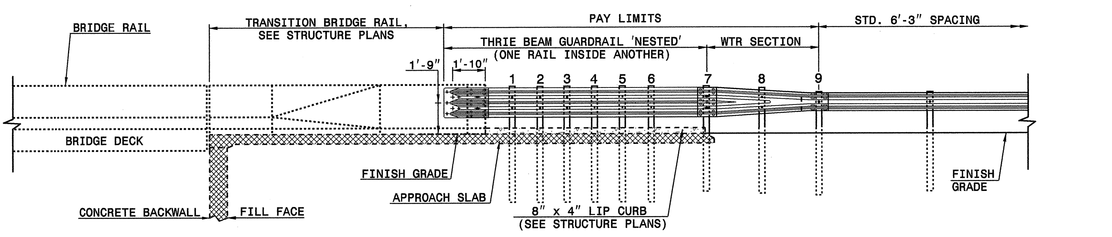

ELEVATION

NOTE:
-SHOULDER BERM GUTTER MUST BE INSTALLED TO THE LIMITS 8" x 4" LIP CURB IS SHOWN IF ANCHOR UNIT IS NOT ADJACENT TO AN APPROACH SLAB.
-MEASURE GUARDRAIL HEIGHT FROM THE TOP OF ADJACENT SURFACE (SHOULDER, BERM, OR GUTTER).
-LAP JOINTS IN THE DIRECTION OF TRAFFIC FLOW.
-SEE SHEET 5 FOR POST SECTIONS 1 THRU 9.

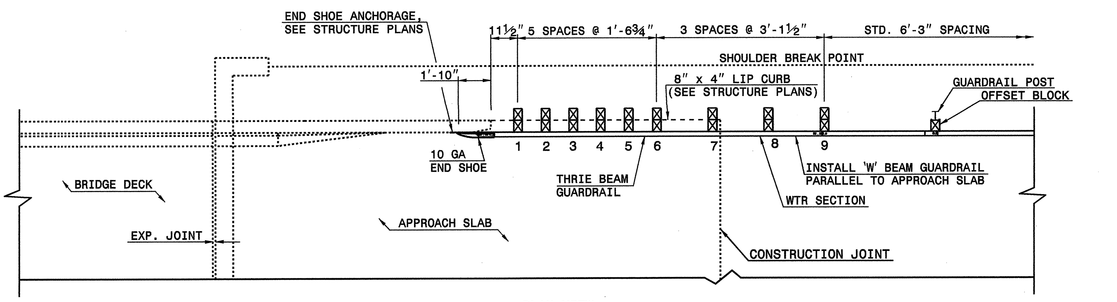

PLAN VIEW

GUARDRAIL ANCHOR UNIT, TYPE III FOR ATTACHMENT TO RAIL ON APPROACH SLAB (25' MINIMUM LENGTH APPROACH SLAB)

STATE OF NORTH CAROLINA
DEPT. OF TRANSPORTATION
DIVISION OF HIGHWAYS
RALEIGH, N.C.

ENGLISH DETAIL DRAWING FOR
STRUCTURE ANCHOR UNITS
GUARDRAIL ANCHOR UNIT, TYPE III FOR ATTACHMENT TO
RAIL ON APPROACH SLAB (25' MINIMUM LENGTH APPROACH SLAB)

SHEET 4 OF 6
862D03

PROJECT SERVICES UNIT
STANDARDS AND SPECIAL DESIGN
Office 919-250-4128 FAX 919-250-4119

SEE PLATE FOR TITLE

ORIGINAL BY: 2002 STANDARDS DATE: 01-15-02
MODIFIED BY: CLAYS WARD DATE: 09-14-05
CHECKED BY: DATE:
FILE SPEC.: stds/02stdstcodetails/english/862d03.dgn

PROJECT REFERENCE NO. I-4111
SHEET NO. Z-P

STATE OF NORTH CAROLINA
DEPT. OF TRANSPORTATION
DIVISION OF HIGHWAYS
RALEIGH, N.C.

ENGLISH DETAIL DRAWING FOR
STRUCTURE ANCHOR UNITS
GUARDRAIL ANCHOR UNIT, TYPE III

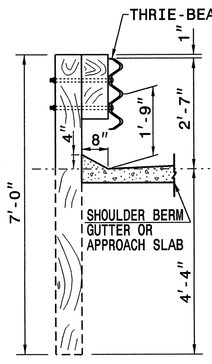

SECTION OF THRIE BEAM POSTS 1 THRU 6

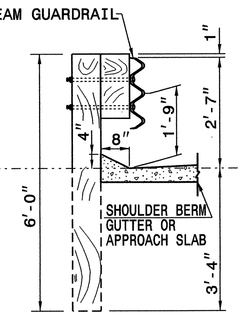

SECTION OF THRIE BEAM POST 7

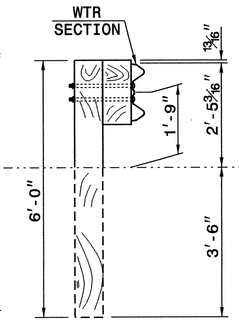

SECTION OF WTR BEAM POST 8

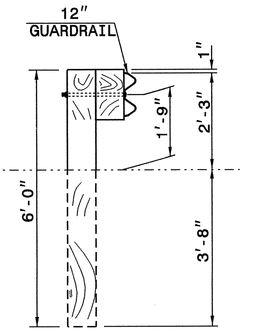

SECTION OF 'W' BEAM POST 9

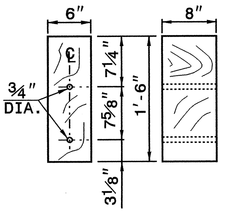

THRIE BEAM OFFSET BLOCK

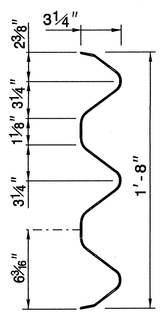

THRIE-BEAM SECTION

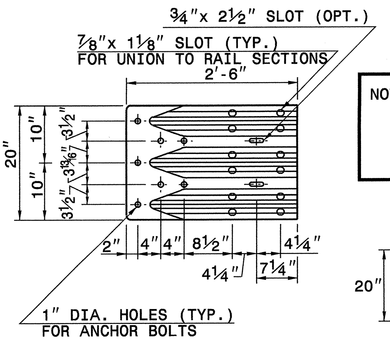

END SHOE

NOTE: THE MID POST AND OFFSET BLOCK OF THE WTR SECTION WILL REQUIRE SPECIAL BOLT HOLE DRILLING IN THE THRIE BEAM OFFSET BLOCK AND LINE POST.

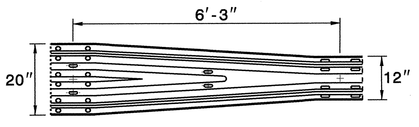

WTR SECTION
ELEVATION VIEW

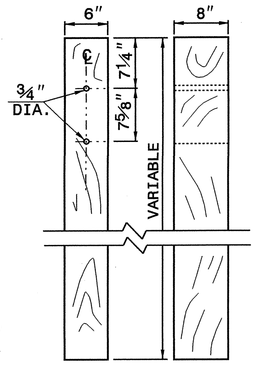

THRIE BEAM LINE POST

STATE OF NORTH CAROLINA
DEPT. OF TRANSPORTATION
DIVISION OF HIGHWAYS
RALEIGH, N.C.

ENGLISH DETAIL DRAWING FOR
STRUCTURE ANCHOR UNITS
GUARDRAIL ANCHOR UNIT, TYPE III

SHEET 5 OF 6
862D03

STATE OF NORTH CAROLINA
DEPT. OF TRANSPORTATION
DIVISION OF HIGHWAYS
RALEIGH, N.C.

ENGLISH DETAIL DRAWING FOR
STRUCTURE ANCHOR UNITS
ANCHORAGE FOR GUARDRAIL POST ON BOX CULVERT

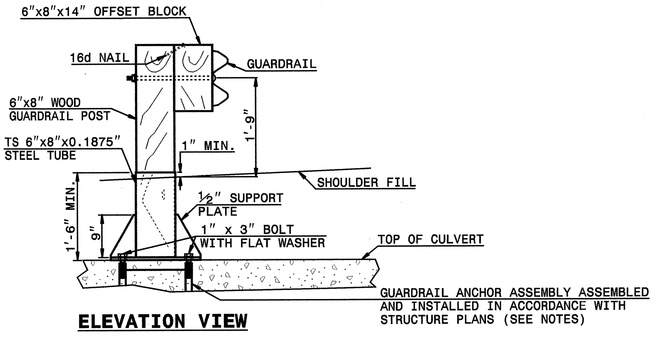

ELEVATION VIEW

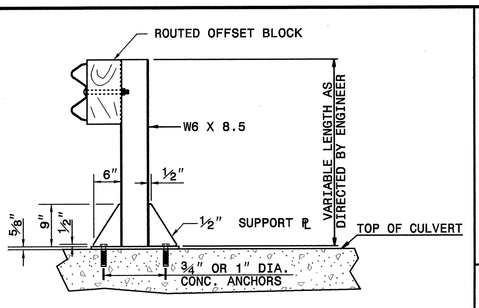

ELEVATION VIEW

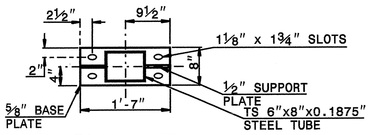

PLAN VIEW

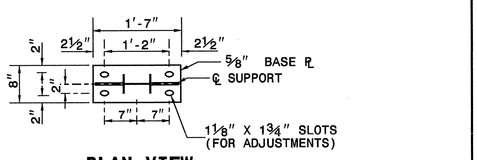

PLAN VIEW

NOTES FOR:
GUARDRAIL POST ANCHORED TO STRUCTURE:
- -USE FULL LENGTH 1/4" BUTT WELDS AT ALL LOCATIONS OF CONTACT BETWEEN THE BASE PLATE, SUPPORT PLATES AND STEEL POST OR STEEL TUBE.
- -USE POST AND POST BASE PLATES CONFORMING TO THE REQUIREMENTS OF A.S.T.M. A-36 AND GALVANIZED AFTER FABRICATION TO CONFORM TO A.S.T.M. A-123.
- -USE WOOD POSTS WHICH FIT SNUGLY IN THE STEEL TUBE WITH A MAXIMUM OF 1/8" CLEARANCE BETWEEN TUBE WALL AND POST.

NEW STRUCTURES:
- -ATTACH POST TO INSERT ASSEMBLY UNITS (USING ANCHOR BOLTS SUPPLIED WITH INSERTS) WHICH HAVE BEEN CAST INTO THE STRUCTURE DURING CONSTRUCTION.

EXISTING STRUCTURES:
- -USE CONCRETE ANCHORS CONSISTING OF A STUD BOLT WITH NUT AND WASHER. USE STUDS THREADED ON ONE END AND HAVING AN EXPANDED WEDGE ASSEMBLY POSITIONED AROUND A TAPERED AREA AT THE OTHER END. USE ANCHORS WHICH PROVIDE A MINIMUM SAFE HOLDING POWER OF 2875 LBS. FOR A 3/4" OR 1" DIAMETER BOLT. CALCULATE HOLDING POWER BASED ON 1/4 THE ACTUAL HOLDING POWER OF THE ANCHOR IN 3500 PSI CONCRETE AS DETERMINED BY AN APPROVED COMMERCIAL TESTING LABORATORY.

- -USE ANCHORS GALVANIZED IN ACCORDANCE WITH A.S.T.M. A-153. SIZE HOLES FOR THE CONCRETE ANCHORS IN ACCORDANCE WITH THE ANCHOR MANUFACTURER'S RECOMMENDATIONS. DRILL HOLES WITH A CARBIDE OR DIAMOND TIPPED MASONRY BIT POWERED BY A ROTARY OR ROTARY IMPACT DRILL. NO OTHER IMPACT TOOLS WILL BE PERMITTED. DRILL HOLES VERTICALLY. FURNISH DOCUMENTATION OF HOLE SIZE RECOMMENDED FOR THE SPECIFIED ANCHOR TO THE ENGINEER BEFORE DRILLING HOLES. THOROUGHLY CLEAN HOLES FOR ANCHORS OF ALL CONCRETE CHIPS, DUST, GREASE, OIL, ETC. BEFORE ANCHORS ARE INSTALLED. REPAIR ALL DAMAGE CAUSED BY THIS WORK TO THE SATISFACTION OF THE ENGINEER.

ANCHORAGE FOR GUARDRAIL POST ON BOX CULVERT

STATE OF NORTH CAROLINA
DEPT. OF TRANSPORTATION
DIVISION OF HIGHWAYS
RALEIGH, N.C.

ENGLISH DETAIL DRAWING FOR
STRUCTURE ANCHOR UNITS
ANCHORAGE FOR GUARDRAIL POST ON BOX CULVERT

SHEET 6 OF 6
862D03

PROJECT SERVICES UNIT
STANDARDS AND SPECIAL DESIGN
OFFICE 919-250-4128 FAX 919-250-4119

SEE PLATE FOR TITLE

ORIGINAL BY: 2002 STANDARDS DATE: 01-15-02
MODIFIED BY: E.E. WARD DATE: 09-14-05
CHECKED BY: DATE: 9/15/05
FILE SPEC.: stds/02stdstoddetails/english/862d03.dgn

PROJECT REFERENCE NO. I-4411
SHEET NO. 2-Q

PROJECT REFERENCE NO.	SHEET NO.
I-4411	2-R

STATE OF
NORTH CAROLINA
DEPT. OF TRANSPORTATION
DIVISION OF HIGHWAYS
RALEIGH, N.C.

ENGLISH DETAIL DRAWING FOR
DROP INLET INSTALLATION IN EXPRESSWAY GUTTER

SHEET 1 OF 1
846D02

GENERAL NOTES:
-PAY FOR TRANSITION SECTION AS CONCRETE EXPRESSWAY GUTTER.
-GUARDRAIL OPTIONAL

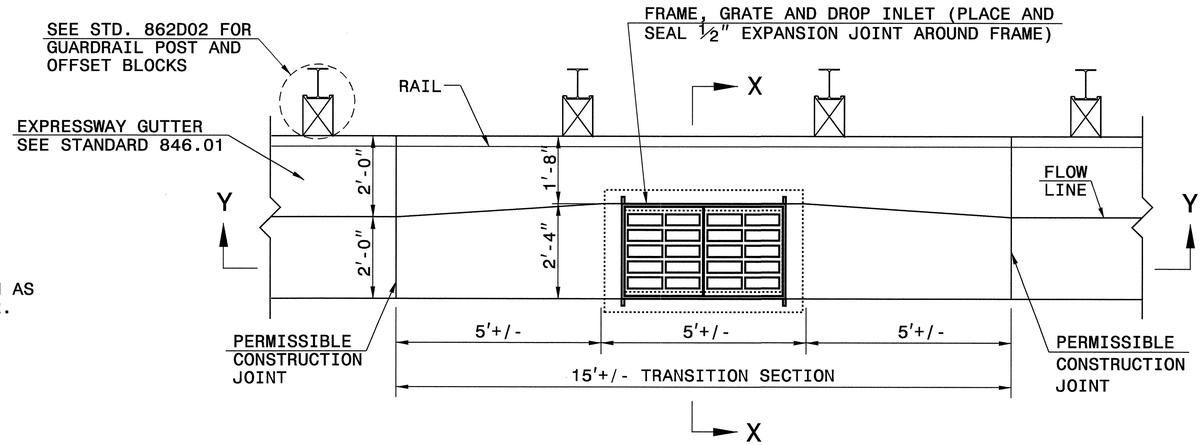

PLAN

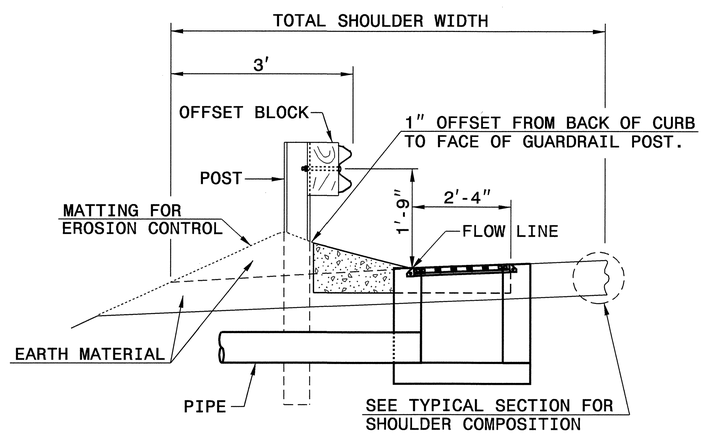

SECTION X-X

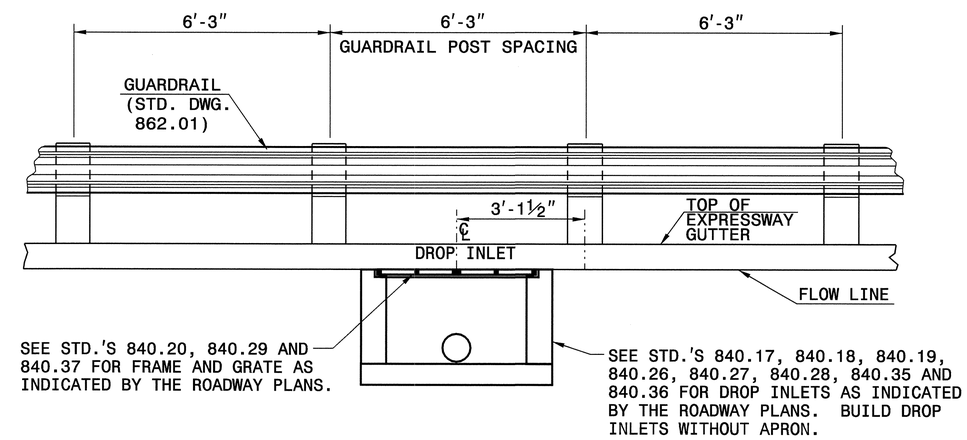

SECTION Y-Y

DROP INLET INSTALLATION IN EXPRESSWAY GUTTER

STATE OF
NORTH CAROLINA
DEPT. OF TRANSPORTATION
DIVISION OF HIGHWAYS
RALEIGH, N.C.

ENGLISH DETAIL DRAWING FOR
DROP INLET INSTALLATION IN EXPRESSWAY GUTTER

SHEET 1 OF 1
846D02

NORTH CAROLINA PROFESSIONAL SEAL 022866 ENGINEER JOHN D. HOUTON
3/20/06

PROJECT SERVICES UNIT
STANDARDS AND SPECIAL DESIGN
Office 919-250-4128 FAX 919-250-4119

SEE PLATE FOR TITLE

ORIGINAL BY: 2002 STANDARDS DATE: 01-15-02
MODIFIED BY: E.E. WARD DATE: 04-07-04
CHECKED BY: [illegible] DATE: 3/20/06
FILE SPEC.: srds/02stdstodetails/english/846d02.dgn

16-MAR-2006 14:28
s:\Contracts\Contracts\Special Details\english\02' Stds to Special Details\english\846d02.dgn
ewward PT FSC22243

PROJECT REFERENCE NO.	SHEET NO.
I-4411	2-S

STATE OF
NORTH CAROLINA
DEPT. OF TRANSPORTATION
DIVISION OF HIGHWAYS
RALEIGH, N.C.

ENGLISH DETAIL DRAWING FOR
GUIDE FOR GRADING SUBGRADE
INTERSTATE AND FREEWAY
(ROUND BOTTOM DITCH & MEDIAN DITCH)

SHEET 1 OF 1
225D01

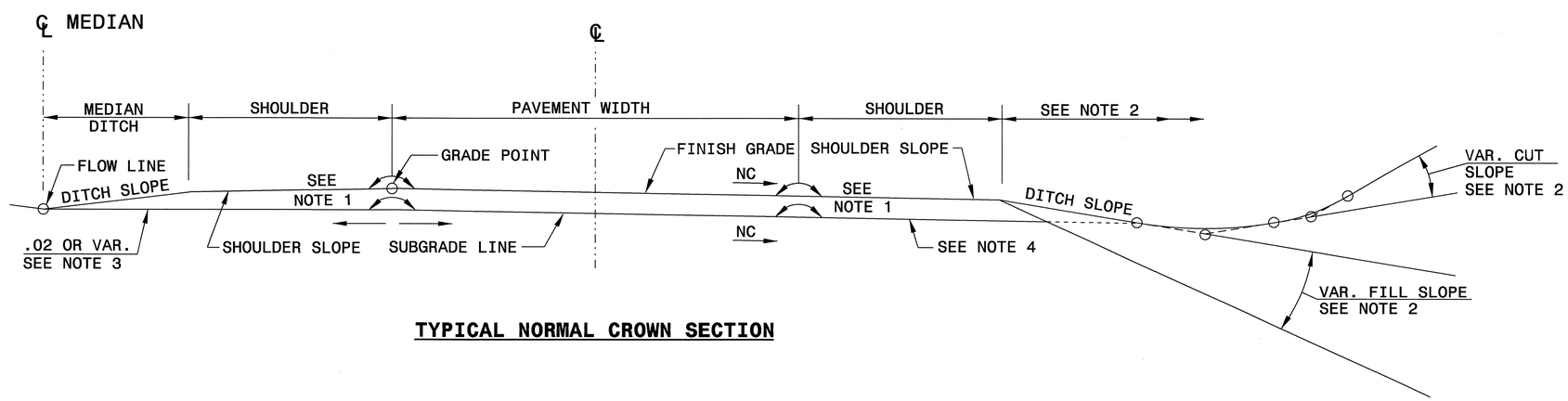

TYPICAL NORMAL CROWN SECTION

1. SEE TYPICAL SECTION FOR LATERAL LOCATION OF ROLLOVER.
2. SEE PLANS FOR METHOD OF CONSTRUCTING CUT AND FILL SLOPES.
3. SUBGRADE LINE WILL NOT UNDERCUT DITCH GRADE AT ANY POINT.
4. OUTSIDE SHOULDER SUBGRADES ARE THE SAME RATE OF SLOPE AS THE ADJACENT TRAVEL LANE SUBGRADES **UNLESS** CONSTRUCTED ON THE HIGH SIDE OF SUPERELEVATION OR CONSIST OF 10′ AND WIDER FULL DEPTH PAVEMENT (SEE STDS. 560.01 AND 560.02).

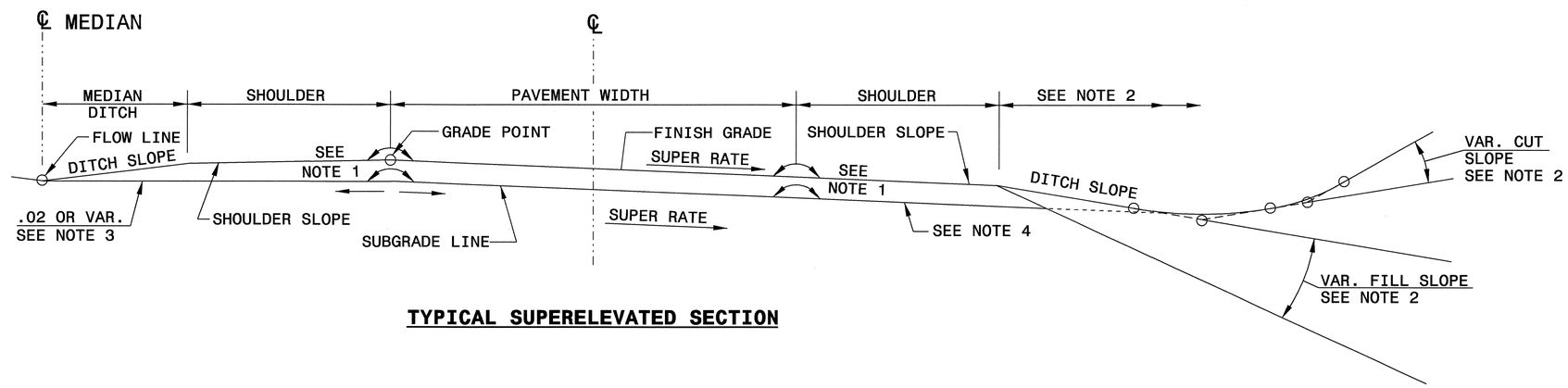

TYPICAL SUPERELEVATED SECTION

STATE OF
NORTH CAROLINA
DEPT. OF TRANSPORTATION
DIVISION OF HIGHWAYS
RALEIGH, N.C.

ENGLISH DETAIL DRAWING FOR
GUIDE FOR GRADING SUBGRADE
INTERSTATE AND FREEWAY
(ROUND BOTTOM DITCH & MEDIAN DITCH)

SHEET 1 OF 1
225D01

NORTH CAROLINA PROFESSIONAL SEAL 022966 ENGINEER JOEL S. HOWERTON
3/20/06

PROJECT SERVICES UNIT
STANDARDS AND SPECIAL DESIGN
Office 919-250-4128 FAX 919-250-4119

SEE PLATE FOR TITLE

ORIGINAL BY: 2002 STANDARDS DATE: 01-15-02
MODIFIED BY: E.E. WARD DATE: 04-07-03
CHECKED BY: [signature] DATE: 3/20/06
FILE SPEC.: stds/02stdstodetails/english/225d01.dgn

16-MAR-2006 14:27
S:\Contracts\Contracts\Special Details\ericward\stds\02 Stds to Special Details\english\22501\0225d01.dgn
ericward AT FS222293

PROJECT REFERENCE NO.	SHEET NO.
I-4411	2-T

STATE OF
NORTH CAROLINA
DEPT. OF TRANSPORTATION
DIVISION OF HIGHWAYS
RALEIGH, N.C.

ENGLISH DETAIL DRAWING FOR
ASPHALT SHOULDERS
MILLED RUMBLE STRIPS

SHEET 1 OF 2
665D01

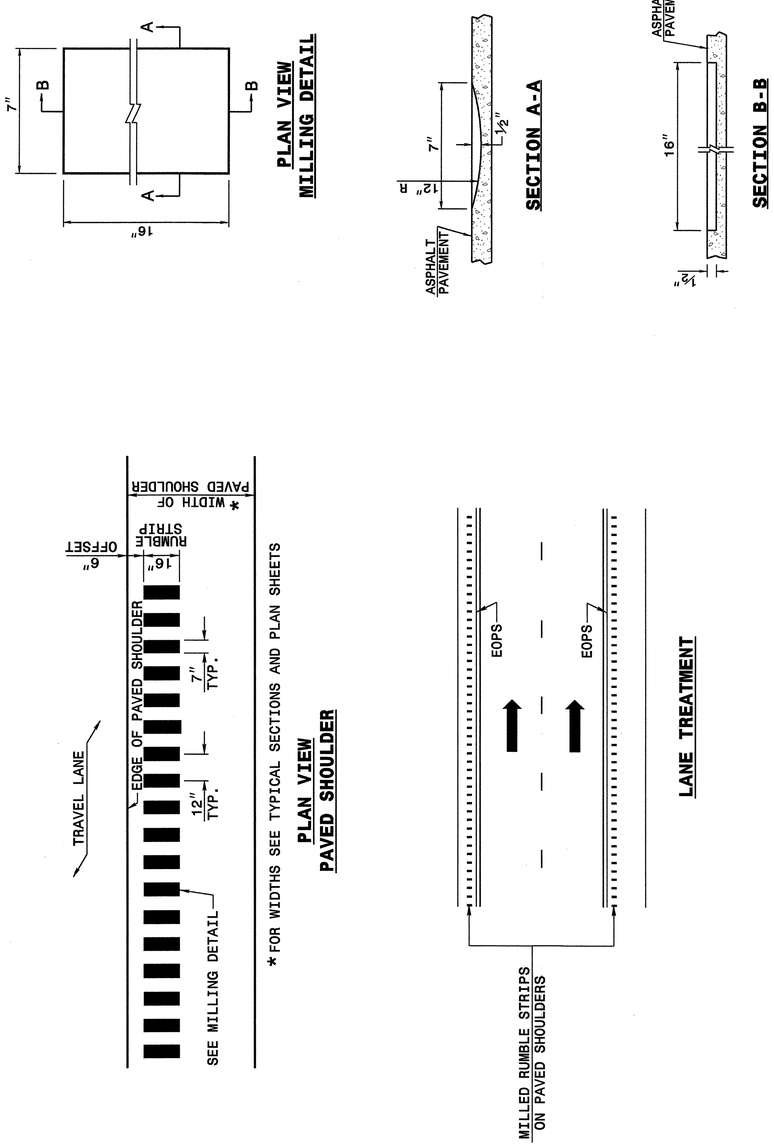

STATE OF
NORTH CAROLINA
DEPT. OF TRANSPORTATION
DIVISION OF HIGHWAYS
RALEIGH, N.C.

ENGLISH DETAIL DRAWING FOR
ASPHALT SHOULDERS
MILLED RUMBLE STRIPS

SHEET 2 OF 2
665D01

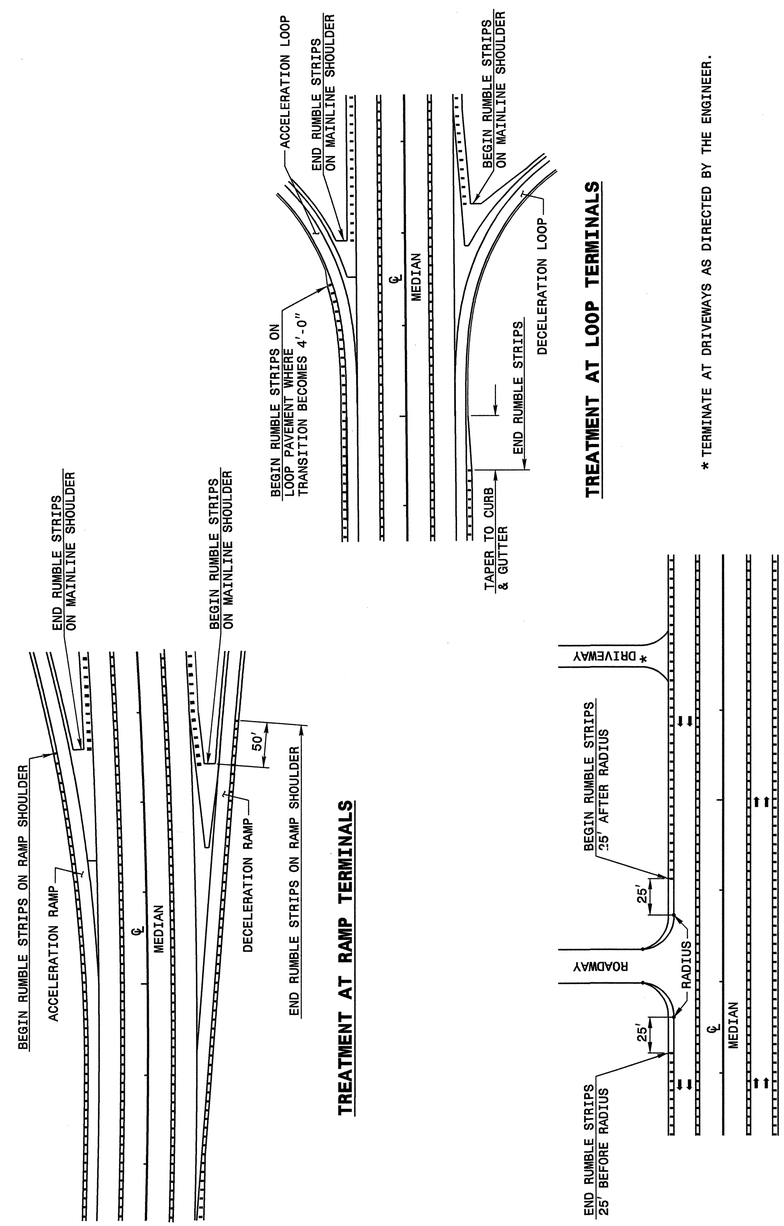

STATE OF
NORTH CAROLINA
DEPT. OF TRANSPORTATION
DIVISION OF HIGHWAYS
RALEIGH, N.C.

ENGLISH DETAIL DRAWING FOR
ASPHALT SHOULDERS
MILLED RUMBLE STRIPS

SHEET 1 OF 2
665D01

STATE OF
NORTH CAROLINA
DEPT. OF TRANSPORTATION
DIVISION OF HIGHWAYS
RALEIGH, N.C.

ENGLISH DETAIL DRAWING FOR
ASPHALT SHOULDERS
MILLED RUMBLE STRIPS

SHEET 2 OF 2
665D01

NORTH CAROLINA PROFESSIONAL SEAL 022966 ENGINEER JOEL S. HOWERTON
5/24/05

PROJECT SERVICES UNIT
STANDARDS AND SPECIAL DESIGN
Office 919-250-4128 FAX 919-250-4119

SEE PLATE FOR TITLE

ORIGINAL BY: 2002 STANDARDS DATE: 01-15-02
MODIFIED BY: E.E. WARD DATE: 09-16-04
CHECKED BY: DATE: 11/12/04
FILE SPEC.: stds/02stdstodetails/english/665d01.dgn

28-OCT-2004 13:40
W:\Special Details\
ericward AT 0521260

PROJ. REFERENCE NO.	SHEET NO.	TOTAL SHEETS
I-4411	2-U	
STATE PROJ. NO.	F.A. PROJ. NO.	DESCRIPTION

SETTLEMENT GAUGE DETAIL

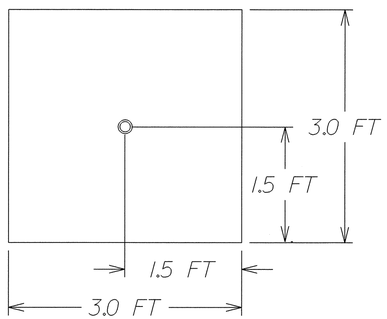

STEEL BASE

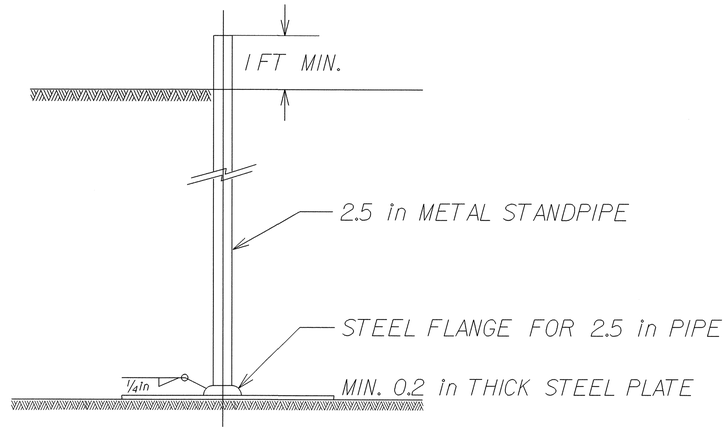

DETAIL OF STEEL BASE

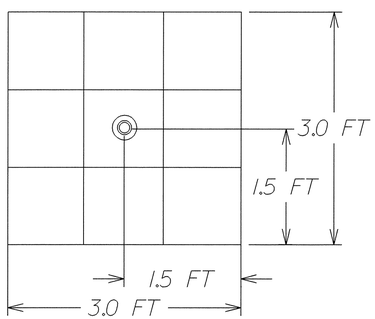

WOOD BASE

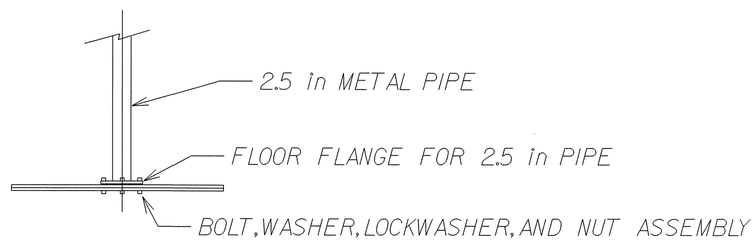

DETAIL OF WOOD BASE

SIX - 1in X 1FT X 3 FT PLANKS OF LUMBER OR TWO PIECES 1in X 3 FT X 3 FT EXTERIOR GRADE PLYWOOD, SECURELY FASTENED AND THEN COATED WITH WOOD PRESERVATIVE

PLAN VIEW

N.T.S.

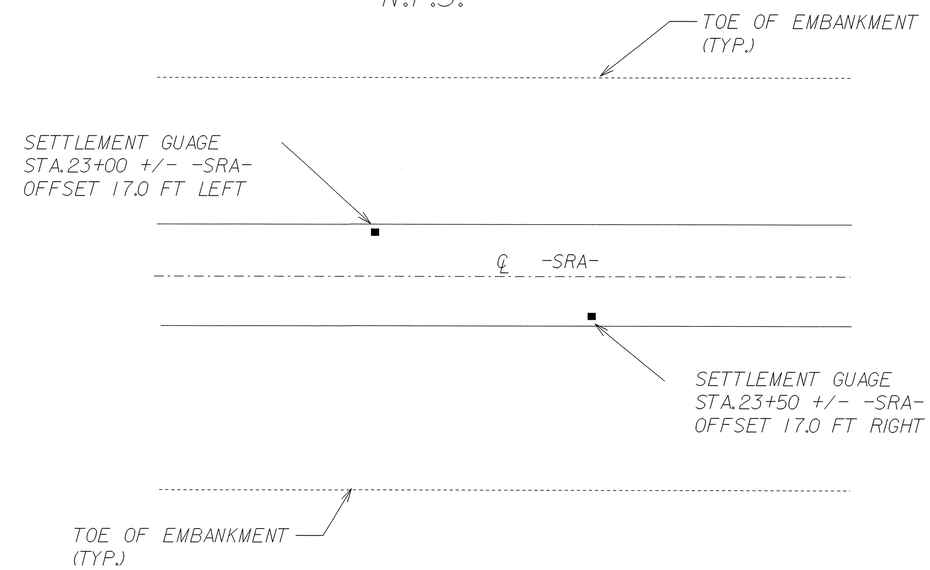

NOTES

1. THE USE OF EITHER THE WOOD BASE OR THE STEEL BASE SETTLEMENT GUAGE SHALL BE THE CONTRACTOR'S OPTION.
2. SETTLEMENT GUAGES SHALL BE INSTALLED BEFORE ANY FILL IS PLACED.
3. SETTLEMENT GUAGE ELEVATIONS ARE TO BE DETERMINED AND RECORDED WEEKLY BY THE RESIDENT ENGINEER. THE INITIAL ELEVATION OF THE SETTLEMENT GUAGE PLATE (AT TOP OF PLATE) SHALL BE DETERMINED AT THE TIME OF INSTALLATION ALONG WITH THE EMBANKMENT ELEVATION. WHEN NEW SECTIONS OF THE PIPE ARE ADDED, ELEVATIONS SHALL BE RECORDED AT THE TOP OF EXISTING PIPE AND AT THE TOP OF THE NEW PIPE. THIS IS TO TAKE INTO ACCOUNT INTERIM SETTLEMENT, VARIABLE PIPE LENGTHS, AND THREAD LENGTHS IN COUPLING. RESULTS OF SETTLEMENT GUAGE READINGS SHALL BE FORWARDED TO MR. NJOROGE WAINAINA, P.E., HEAD OF GEOTECHNICAL ENGINEERING UNIT, WITHIN THREE DAYS.

QUANTITIES

SETTLEMENT GAUGES ..... 2 each

NORTH CAROLINA PROFESSIONAL SEAL 022122 ENGINEER SHUNYI CHEN 6/24/05

DRAWN BY CSC DATE 2-04
CHECKED BY SAH DATE 2-04

PROJECT 35604.1.1 (I-4411)
IREDELL COUNTY
STATION 23+00 AND 23+50 -SRA-

STATE OF NORTH CAROLINA
DEPARTMENT OF TRANSPORTATION
RALEIGH

EMBANKMENT MONITORING

PROJ. REFERENCE NO.	SHEET NO.	TOTAL SHEETS
I-4411	2-V	
STATE PROJ. NO.	F.A. PROJ. NO.	DESCRIPTION

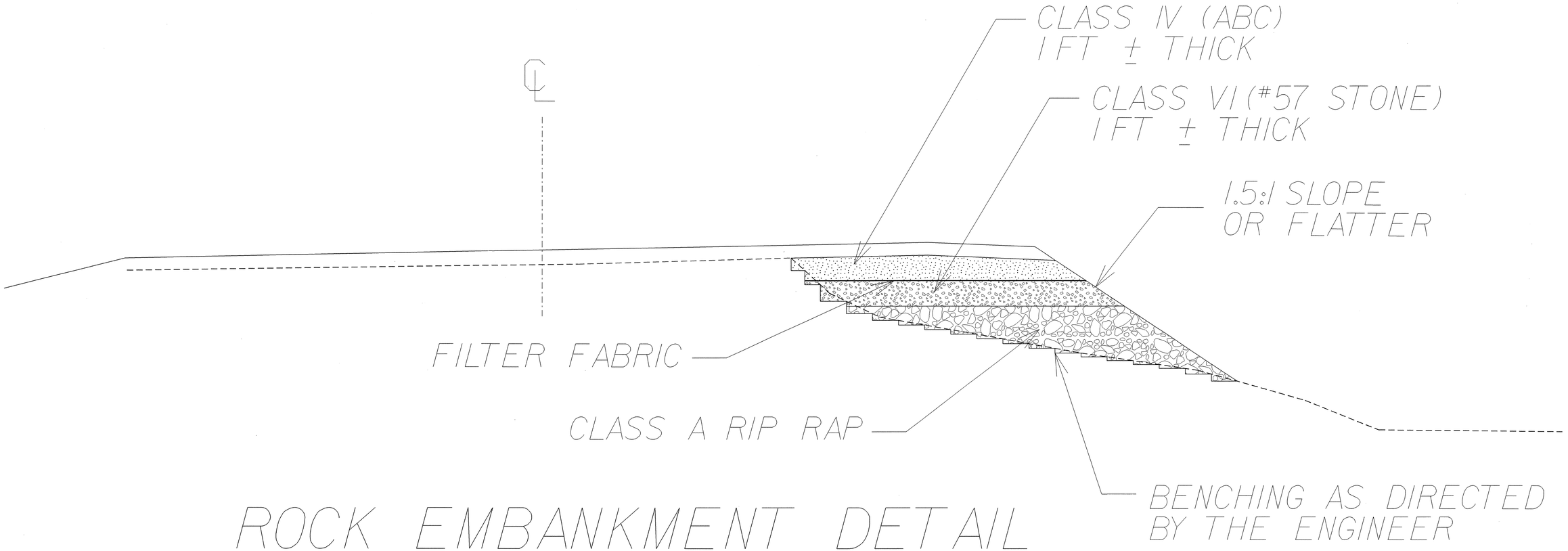

ROCK EMBANKMENT DETAIL

(STATIONS 76+25.00 ± TO 79+25.00 ± -L-)

NTS

NORTH CAROLINA PROFESSIONAL SEAL ENGINEER SHUNYI CHEN 2/20/2004

PROJECT 35604.1.1 (I-4411)

IREDELL COUNTY

STATION 76+25 ± TO 79+25 ± -L-

STATE OF NORTH CAROLINA
DEPARTMENT OF TRANSPORTATION
RALEIGH

DRAWING: CSC DATE: 2-04

CHECK: SAH DATE: 2-04

ROCK EMBANKMENT DETAIL

PROJECT REFERENCE NO.	SHEET NO.
I-4411	2-W

STATE OF NORTH CAROLINA DEPT. OF TRANSPORTATION DIVISION OF HIGHWAYS RALEIGH, N.C.

ENGLISH DETAIL DRAWING FOR
REINFORCED BRIDGE APPROACH FILLS
15' MINIMUM APPROACH SLAB

SHEET 1 OF 7 — 422D10

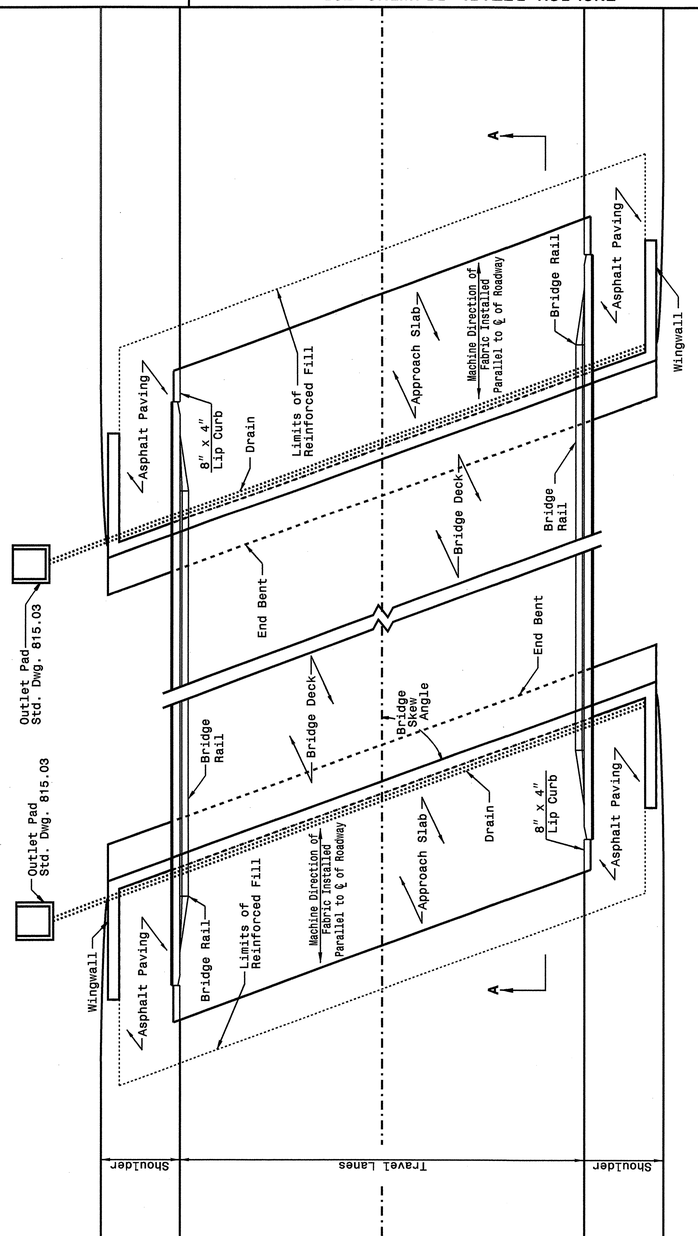

PLAN VIEW
15' MINIMUM APPROACH SLAB

STATE OF NORTH CAROLINA DEPT. OF TRANSPORTATION DIVISION OF HIGHWAYS RALEIGH, N.C.

ENGLISH DETAIL DRAWING FOR
REINFORCED BRIDGE APPROACH FILLS
PRESTRESSED AND PLATE GIRDER BRIDGES
15' MINIMUM APPROACH SLAB

SHEET 2 OF 7 — 422D10

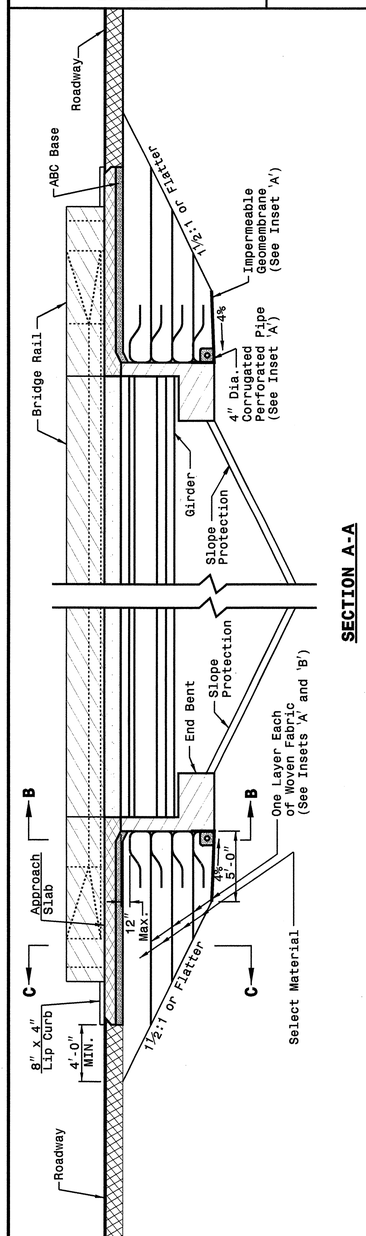

SECTION A-A

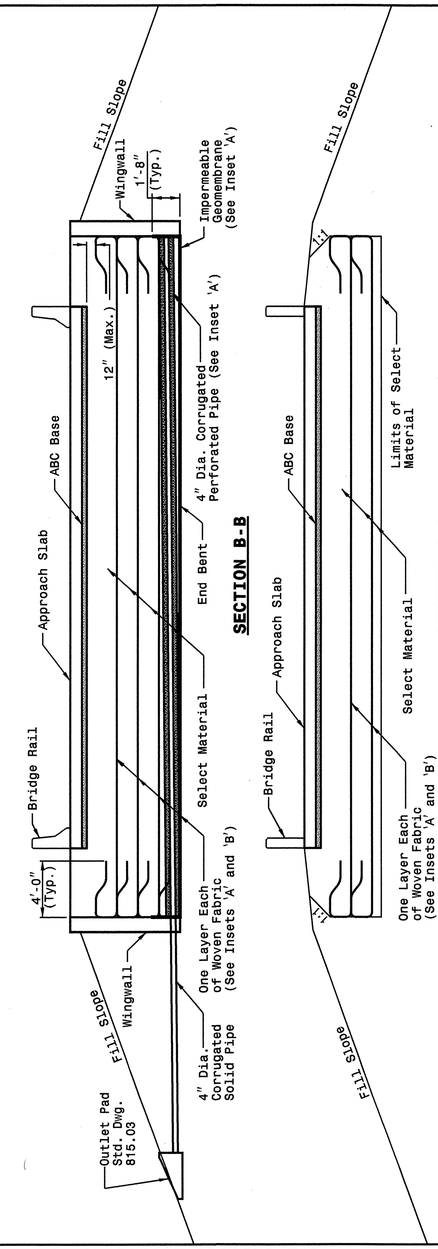

SECTION B-B

SECTION C-C
15' MINIMUM APPROACH SLAB

STATE OF NORTH CAROLINA DEPT. OF TRANSPORTATION DIVISION OF HIGHWAYS RALEIGH, N.C.

ENGLISH DETAIL DRAWING FOR
REINFORCED BRIDGE APPROACH FILLS
PRESTRESSED AND PLATE GIRDER BRIDGES
15' MINIMUM APPROACH SLAB

SHEET 2 OF 7 — 422D10

NORTH CAROLINA PROFESSIONAL SEAL 022966 ENGINEER
3/29/06

PROJECT SERVICES UNIT
STANDARDS AND SPECIAL DESIGN
Office 919-250-4128 FAX 919-250-4119

SEE PLATE FOR TITLE

ORIGINAL BY: 2002 STANDARDS DATE: 01-15-02
MODIFIED BY: E.E. WARD DATE: 09-28-05
CHECKED BY: DATE: 3/29/06
FILE SPEC.: sts/02stdstodetails/english/422d10.dgn

28-SEP-2005 15:30
S:\Contracts\Contracts\Special Details\ericward\stds\02' Stds to 'Special Details\english\422d10\0422d10.dgn
ericward AT FSC222-2

28-SEP-2005 15:31
S:\Contracts\Contracts\Special Details\ericward\stds\02' Stds to Special Details\english\42210\0422d10.dgn
ericward AT PS222293

STATE OF NORTH CAROLINA
DEPT. OF TRANSPORTATION
DIVISION OF HIGHWAYS
RALEIGH, N.C.

ENGLISH DETAIL DRAWING FOR
REINFORCED BRIDGE APPROACH FILLS
CORED SLAB BRIDGES
15' MINIMUM APPROACH SLAB

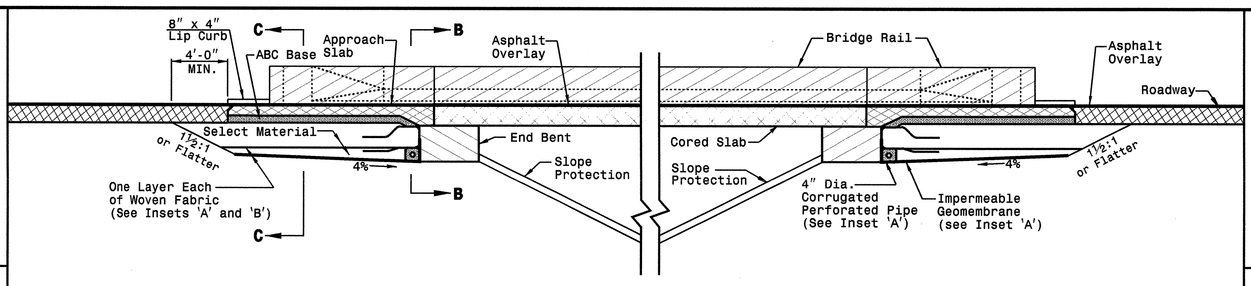

SECTION A-A

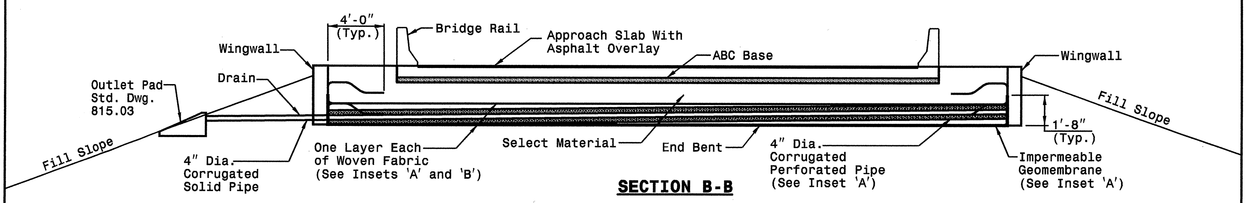

SECTION B-B

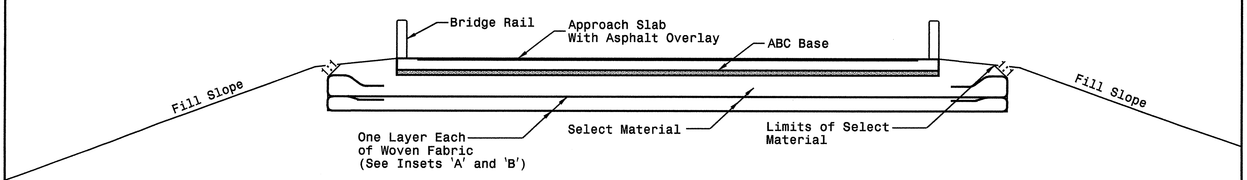

SECTION C-C

15' MINIMUM APPROACH SLAB

SHEET 3 OF 7
422D10

STATE OF NORTH CAROLINA
DEPT. OF TRANSPORTATION
DIVISION OF HIGHWAYS
RALEIGH, N.C.

ENGLISH DETAIL DRAWING FOR
REINFORCED BRIDGE APPROACH FILLS
CORED SLAB BRIDGES
15' MINIMUM APPROACH SLAB

SHEET 3 OF 7
422D10

STATE OF NORTH CAROLINA
DEPT. OF TRANSPORTATION
DIVISION OF HIGHWAYS
RALEIGH, N.C.

ENGLISH DETAIL DRAWING FOR
REINFORCED BRIDGE APPROACH FILLS
25' MINIMUM APPROACH SLAB

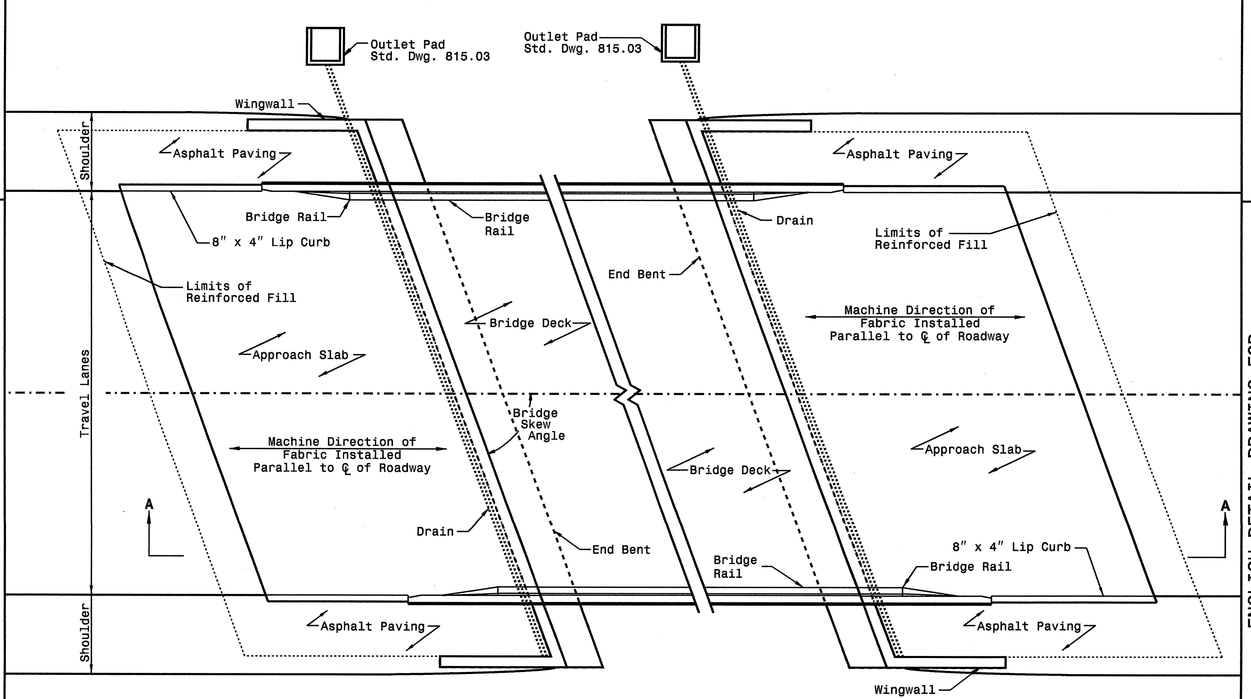

PLAN VIEW
25' MINIMUM APPROACH SLAB

SHEET 4 OF 7
422D10

STATE OF NORTH CAROLINA
DEPT. OF TRANSPORTATION
DIVISION OF HIGHWAYS
RALEIGH, N.C.

ENGLISH DETAIL DRAWING FOR
REINFORCED BRIDGE APPROACH FILLS
25' MINIMUM APPROACH SLAB

SHEET 4 OF 7
422D10

PROJECT SERVICES UNIT
STANDARDS AND SPECIAL DESIGN
Office 919-250-4128 FAX 919-250-4119

SEE PLATE FOR TITLE

ORIGINAL BY: 2002 STANDARDS DATE: 01-15-02
MODIFIED BY: E.E. WARD DATE: 09-28-05
CHECKED BY: [signature] DATE: 4/29/05
FILE SPEC.: stds/02stdstodetails/english/422d10.dgn

NORTH CAROLINA PROFESSIONAL SEAL 022966 ENGINEER JOEL S. HOWERTON
3/20/06

PROJECT REFERENCE NO. I-4411
SHEET NO. 2-X

20-SEP-2005 08:49
S:\Contracts\Contracts\Special Details\ericward\stds\02'Stds to Special Details\english\42210\0422d10.dgn
ericward AT PS222293

STATE OF NORTH CAROLINA
DEPT. OF TRANSPORTATION
DIVISION OF HIGHWAYS
RALEIGH, N.C.

ENGLISH DETAIL DRAWING FOR
REINFORCED BRIDGE APPROACH FILLS
PRESTRESSED AND PLATE GIRDER BRIDGES
25' MINIMUM APPROACH SLAB

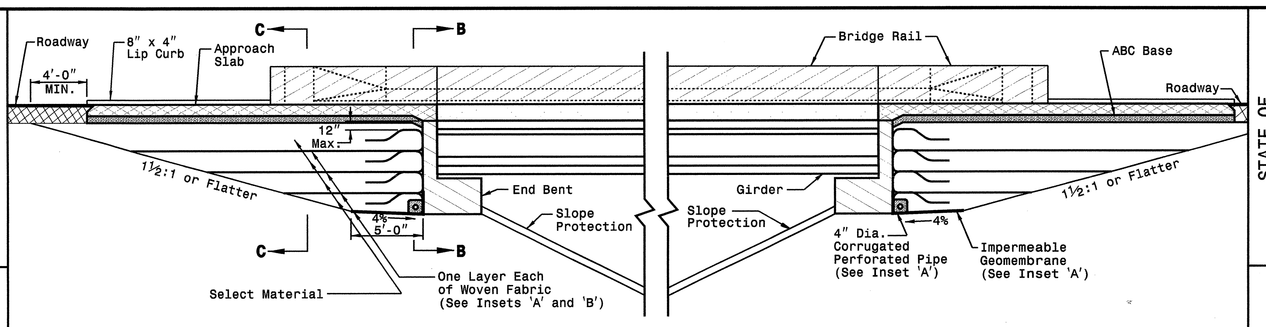

SECTION A-A

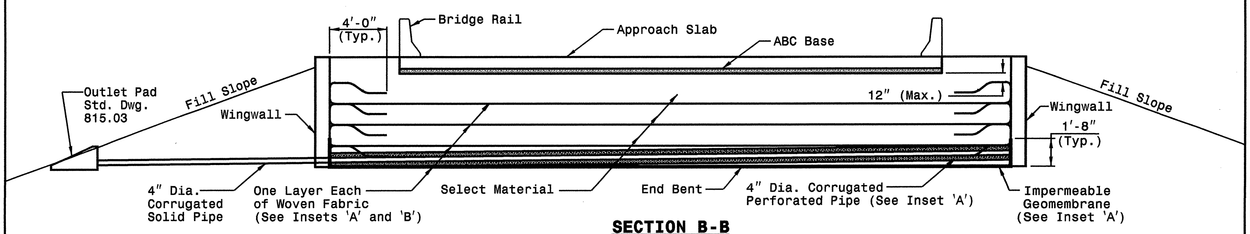

SECTION B-B

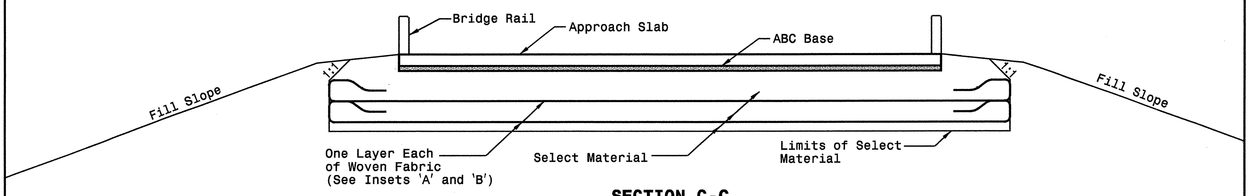

SECTION C-C

25' MINIMUM APPROACH SLAB

SHEET 5 OF 7
422D10

STATE OF NORTH CAROLINA
DEPT. OF TRANSPORTATION
DIVISION OF HIGHWAYS
RALEIGH, N.C.

ENGLISH DETAIL DRAWING FOR
REINFORCED BRIDGE APPROACH FILLS
PRESTRESSED AND PLATE GIRDER BRIDGES
25' MINIMUM APPROACH SLAB

SHEET 5 OF 7
422D10

STATE OF NORTH CAROLINA
DEPT. OF TRANSPORTATION
DIVISION OF HIGHWAYS
RALEIGH, N.C.

ENGLISH DETAIL DRAWING FOR
REINFORCED BRIDGE APPROACH FILLS
CORED SLAB BRIDGES
25' MINIMUM APPROACH SLAB

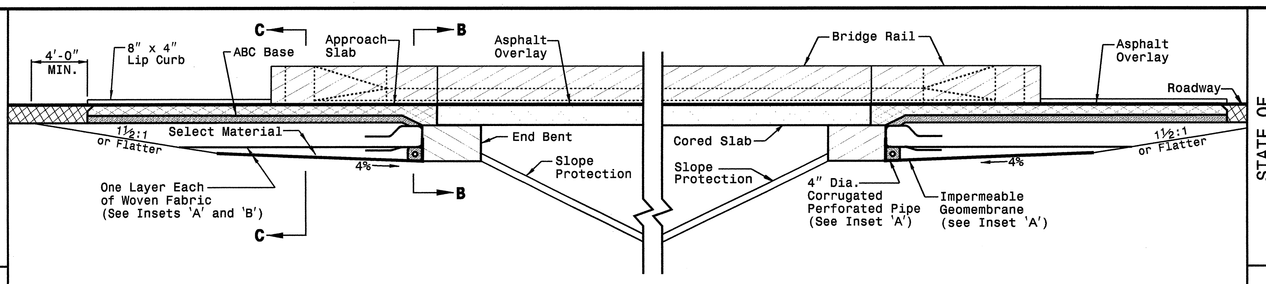

SECTION A-A

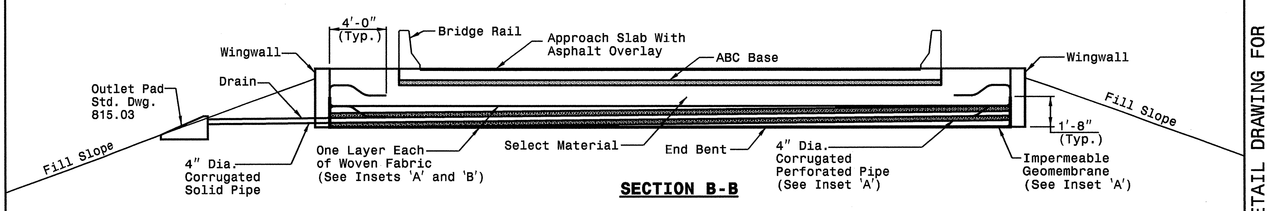

SECTION B-B

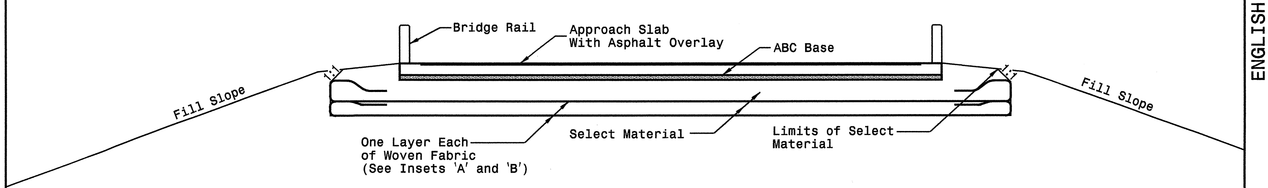

SECTION C-C

25' MINIMUM APPROACH SLAB

SHEET 6 OF 7
422D10

STATE OF NORTH CAROLINA
DEPT. OF TRANSPORTATION
DIVISION OF HIGHWAYS
RALEIGH, N.C.

ENGLISH DETAIL DRAWING FOR
REINFORCED BRIDGE APPROACH FILLS
CORED SLAB BRIDGES
25' MINIMUM APPROACH SLAB

SHEET 6 OF 7
422D10

PROJECT SERVICES UNIT
STANDARDS AND SPECIAL DESIGN
Office 919-250-4128 FAX 919-250-4119

SEE PLATE FOR TITLE

ORIGINAL BY: 2002 STANDARDS DATE: 01-15-02
MODIFIED BY: E.E. WARD DATE: 09-12-05
CHECKED BY: [signature] DATE: 9/20/05
FILE SPEC.: stds/02stdstodetails/english/422d10.dgn

NORTH CAROLINA PROFESSIONAL SEAL 022966 ENGINEER JOHN H. HAMPTON
3/20/06

PROJECT REFERENCE NO. I-4411
SHEET NO. 2-Y

20-SEP-2005 08:49
S:\Contracts\Contracts\Special Details\ericward\stds\02' Stds to Special Details\english\422D10\0422d10.dgn
ericward AT PS222293

STATE OF NORTH CAROLINA
DEPT. OF TRANSPORTATION
DIVISION OF HIGHWAYS
RALEIGH, N.C.

ENGLISH DETAIL DRAWING FOR
REINFORCED BRIDGE APPROACH FILLS
INSETS AND CHARTS

SHEET 7 OF 7
422D10

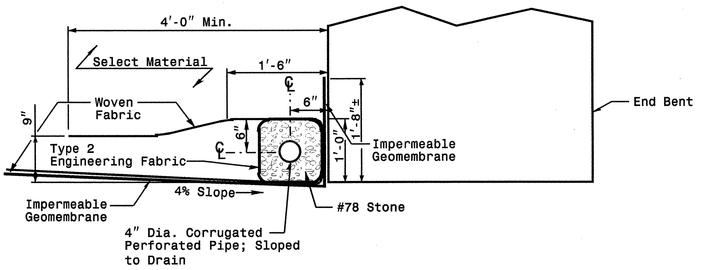

Cored Slab Bridge
Showing First Lift and Drains

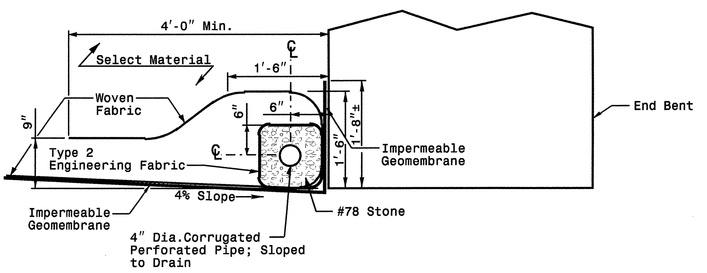

Girder Bridge
Showing First Lift and Drains

Inset 'A'

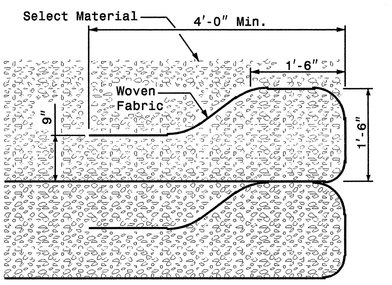

Typical Fabric Lift and Wrap
Showing Second and Above Lifts

Inset 'B'

Height of Backwall	Number of Fabric Layers
4'-6" - 5'-9"	3
5'-10" - 7'-2"	4
7'-3" - 8'-8"	5
8'-9" - 10'-1"	6
10'-2" - 11'-8"	7

Note: Cored Slab Structures Require 2 Fabric Layers.

Length of Bridge End Bent Inside Wingwalls
If Bridge Skew is Less Than or Equal to 90°: $\frac{\text{(Roadway Width + 7'-0")}}{\text{Sin (Bridge Skew Angle)}}$ = Dis. Between Wingwalls
If Bridge Skew is Greater Than 90°: $\frac{\text{(Roadway Width + 7'-0")}}{\text{Cos (Bridge Skew Angle - 90°)}}$ = Dis. Between Wingwalls

STATE OF NORTH CAROLINA
DEPT. OF TRANSPORTATION
DIVISION OF HIGHWAYS
RALEIGH, N.C.

ENGLISH DETAIL DRAWING FOR
REINFORCED BRIDGE APPROACH FILLS
INSETS AND CHARTS

SHEET 7 OF 7
422D10

PROJECT SERVICES UNIT
STANDARDS AND SPECIAL DESIGN
Office 919-250-4128 FAX 919-250-4119

SEE PLATE FOR TITLE

ORIGINAL BY: 2002 STANDARDS DATE: 01-15-02
MODIFIED BY: E.E. WARD DATE: 09-12-05
CHECKED BY: DATE:
FILE SPEC.: scd$/02stdstoerfills/english/422d10.dgn

NORTH CAROLINA PROFESSIONAL SEAL 022896 ENGINEER JOEL SHAW JR.
3/2/06

PROJECT REFERENCE NO. I-4411
SHEET NO. 2-7

PROJECT REFERENCE NO.	SHEET NO.
I-4411	2-AA

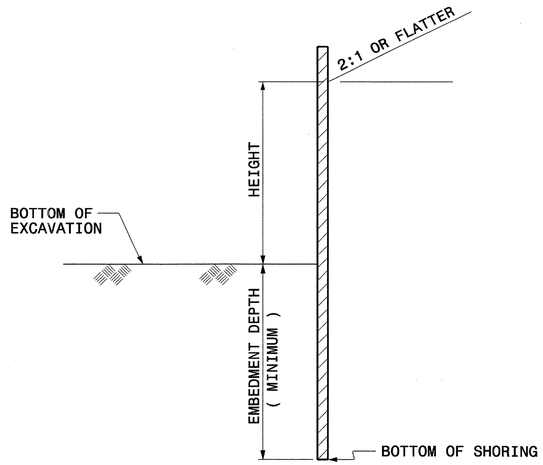

TEMPORARY SHORING

(SLOPING OR LEVEL WITH TRAFFIC SURCHARGE, NO BARRIER IMPACT)

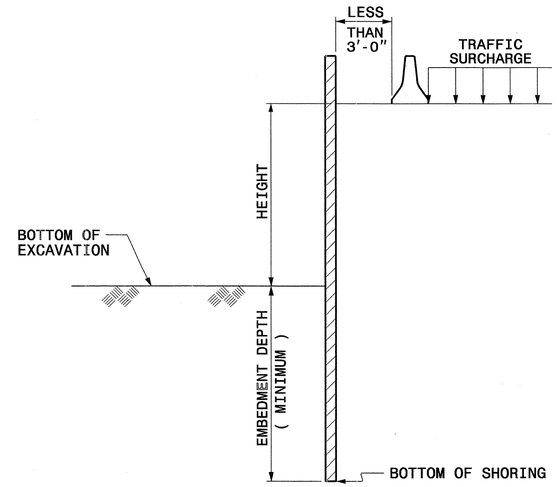

TEMPORARY SHORING - BARRIER SUPPORTED

(LEVEL WITH TRAFFIC SURCHARGE, WITH BARRIER IMPACT)

NOTES

FOR TEMPORARY SHORING FOR MAINTENANCE OF TRAFFIC, SEE SPECIAL PROVISIONS.

SELECT THE APPROPRIATE STANDARD SHORING DESIGN FOR TEMPORARY SHORING FOR MAINTENANCE OF TRAFFIC IN LIEU OF SUBMITTING CONTRACTOR SHORING DESIGN. USE STANDARD SHORING DESIGN ONLY WHEN ALL OF THE FOLLOWING CRITERIA ARE MET:

- MAXIMUM HEIGHT OF SHORING EXCAVATION IS 11 FEET
- GROUNDWATER TABLE IS NOT ABOVE BOTTOM OF THE EXCAVATION
- BACKFILL SLOPE IS 2:1 OR FLATTER
- TRAFFIC SURCHARGE EQUAL TO 240 PSF
- SOLDIER PILE SPACING OF 6 FEET
- TIMBER LAGGING SHALL HAVE A MINIMUM THICKNESS OF 3 INCHES

SUBMIT "STANDARD SHORING SELECTION" FORM TO ENGINEER PRIOR TO CONSTRUCTION OF SHORING.

DO NOT USE THE STANDARD SHORING DESIGNS WHEN VERY SOFT SOIL OR MUCK IS PRESENT WITHIN THE SHORING EMBEDMENT ZONE.

CONTRACTOR MUST VERIFY LOCATION OF GROUNDWATER TABLE PRIOR TO CONSTRUCTION OF SHORING.

THE CONTRACTOR HAS THE OPTION OF USING SOLDIER PILES SET IN DRILLED HOLES WITH A SHORTENED LENGTH EQUAL TO 75% OF THE EMBEDMENT DEPTHS SHOWN IN THE TABLE. FOR DRILLING REQUIREMENTS, SEE TEMPORARY SHORING FOR MAINTENANCE OF TRAFFIC SPECIAL PROVISION.

IF DESIGN EMBEDMENT DEPTH IS NOT ACHIEVED, THEN NOTIFY THE ENGINEER IMMEDIATELY.

GROUNDWATER TABLE CONDITIONS

1) WHEN WATER TABLE IS ABOVE THE BOTTOM OF EXCAVATION, SUBMIT CONTRACTOR SHORING DESIGN TO THE ENGINEER FOR APPROVAL.

2) WHEN WATER TABLE IS BELOW THE BOTTOM OF EXCAVATION AND ABOVE THE BOTTOM OF SHORING, USE "WATER TABLE" CASE.

3) WHEN WATER TABLE IS BELOW BOTTOM OF SHORING, USE "NO WATER TABLE" CASE.

CASE	HEIGHT (FT)	TEMPORARY SHORING					TEMPORARY SHORING - BARRIER SUPPORTED				
		CANTILEVER SHEETING		DRIVEN SOLDIER PILE			CANTILEVER SHEETING		DRIVEN SOLDIER PILE		
		MINIMUM EMBEDMENT DEPTH (FT)	MINIMUM SECTION MODULUS (IN^3 / FT OF WALL)	MINIMUM EMBEDMENT DEPTH (FT)			MINIMUM EMBEDMENT DEPTH (FT)	MINIMUM SECTION MODULUS (IN^3 / FT OF WALL)	MINIMUM EMBEDMENT DEPTH (FT)		
				HP 10x42	HP 12x53	HP 14x73			HP 10x42	HP 12x53	HP 14x73
"NO WATER TABLE"	< 6	7.5	3.0	8.0	8.0	8.0	11.0	10.0	9.5	9.5	9.5
	7	8.5	4.5	9.5	9.5	9.5	12.0	12.0	10.5	10.5	10.5
	8	10.0	6.5	10.5	10.5	10.5	12.5	14.0	11.5	11.5	11.5
	9	11.0	9.5	--	12.0	12.0	13.5	16.5	--	12.5	12.5
	10	12.5	13.0	--	--	13.5	14.0	19.5	--	13.5	13.5
	11	13.5	17.0	--	--	14.5	15.0	22.5	--	--	14.5
"WATER TABLE"	< 6	11.5	4.5	11.5	11.5	11.5	16.0	12.0	13.0	13.0	13.0
	7	13.0	7.0	13.0	13.0	13.0	17.0	14.5	14.5	14.5	14.5
	8	15.0	10.0	--	15.0	15.0	18.0	17.0	--	15.5	15.5
	9	17.0	14.0	--	17.0	17.0	19.0	20.0	--	17.0	17.0
	10	18.5	19.5	--	--	18.5	20.0	23.5	--	--	18.5
	11	20.5	26.0	--	--	--	21.0	28.0	--	--	20.0

SUMMARY

STA. 46+20.00 -L- ± TO STA. 46+90.00 -L- ± LEFT
STA. 46+20.00 -L- ± TO STA. 46+90.00 -L- ± RIGHT

SEE TRAFFIC CONTROL PLANS

NORTH CAROLINA PROFESSIONAL SEAL 022966 ENGINEER JOEL S. HUNT

3/29/06

PROJECT SERVICES UNIT
STANDARDS AND SPECIAL DESIGN
Office 919-250-4128 FAX 919-250-4119

STANDARD TEMPORARY SHORING FOR MAINTENANCE OF TRAFFIC

ORIGINAL BY: SOILS & FOUNDATIONS DATE: 10-2001
MODIFIED BY: DATE:
CHECKED BY: Joel S. Hunt DATE: 10/25/04
FILE SPEC.: eriqward:/usr/details/stand/shoring detail.dgn

22-OCT-2004 14:43
W:\Special Details\eriqward\usr\details\stand\tempshoring.dgn
eriqward AT US212260

5/28/99

PROJECT REFERENCE NO.	SHEET NO.
I-4411	3

SHEET 1 OF 2

STATE OF NORTH CAROLINA
DIVISION OF HIGHWAYS
ROADWAY SUMMARY OF QUANTITIES FOR CONTRACT - C201208

ItemNumber	Sec #	Quantity	Unit	Description
0000100000-N	800	Lump Sum		MOBILIZATION
0000400000-N	801	Lump Sum		CONSTRUCTION SURVEYING
0001000000-E	200	Lump Sum		CLEARING & GRUBBING .. ACRE(S)
0008000000-E	200	2	ACR	SUPPLEMENTARY CLEARING & GRUB-BING
0022000000-E	225	90,320	CY	UNCLASSIFIED EXCAVATION
0029000000-N	SP	Lump Sum		REINFORCED BRIDGE APPROACH FILL, STATION ********** (2&+99.70)
0036000000-E	225	4,400	CY	UNDERCUT EXCAVATION
0080000000-E	SP	3,600	TON	CLASS IV SUBGRADE STABILIZA-TION
0106000000-E	230	112,510	CY	BORROW EXCAVATION
0127000000-N	SP	2	EA	EMBANKMENT SETTLEMENT GAUGES
0134000000-E	240	620	CY	DRAINAGE DITCH EXCAVATION
0141000000-E	240	300	LF	BERM DITCH CONSTRUCTION
0156000000-E	250	54,230	SY	REMOVAL OF EXISTING ASPHALT PAVEMENT
0177000000-E	250	1,500	SY	BREAKING OF EXISTING ASPHALT PAVEMENT
0192000000-N	260	25	HR	PROOF ROLLING
0195000000-E	265	1,000	CY	SELECT GRANULAR MATERIAL
0196000000-E	270	6,800	SY	FABRIC FOR SOIL STABILIZATION
0199000000-E	SP	700	SF	TEMPORARY SHORING
0314000000-E	SP	300	TON	SELECT MATERIAL, CLASS ***** (IV)
0314000000-E	SP	270	TON	SELECT MATERIAL, CLASS ***** (VI)
0318000000-E	300	1,065	TON	FOUNDATION CONDITIONING MATE-RIAL, MINOR STRS
0343000000-E	310	244	LF	15" SIDE DRAIN PIPE
0344000000-E	310	120	LF	18" SIDE DRAIN PIPE
0366000000-E	310	1,040	LF	15" RC PIPE CULVERTS, CLASS III
0372000000-E	310	5,402	LF	18" RC PIPE CULVERTS, CLASS III
0378000000-E	310	1,284	LF	24" RC PIPE CULVERTS, CLASS III
0384000000-E	310	404	LF	30" RC PIPE CULVERTS, CLASS III
0390000000-E	310	384	LF	36" RC PIPE CULVERTS, CLASS III
0396000000-E	310	192	LF	42" RC PIPE CULVERTS, CLASS III
0402000000-E	310	24	LF	48" RC PIPE CULVERTS, CLASS III
0480000000-E	SP	1	EA	60"X 36" RC PIPE TAPERED IN-LET, CLASS III
0708000000-E	310	436	LF	15" BIT COAT CS PIPE CULVERTS, TYPE B 0.064" THICK
0714000000-E	310	344	LF	18" BIT COAT CS PIPE CULVERTS, TYPE B 0.064" THICK
0720000000-E	310	160	LF	24" BIT COAT CS PIPE CULVERTS, TYPE B 0.064" THICK
0806000000-E	310	22	EA	15" BIT COAT CS PIPE ELBOWS, TYPE B 0.064" THICK
0807000000-E	310	8	EA	18" BIT COAT CS PIPE ELBOWS, T YPE B 0.064" THICK
0980000000-E	SP	148	LF	**" WELDED STEEL PIPE, *****" THICK, GRADE B, INSTALLED BY BORING & JACKING (30", 0.5")
0995000000-E	340	619	LF	PIPE REMOVAL
1011000000-N	500	Lump Sum		FINE GRADING
1110000000-E	510	1,000	TON	STABILIZER AGGREGATE
1220000000-E	545	100	TON	INCIDENTAL STONE BASE
1275000000-E	600	6,512	GAL	PRIME COAT
1491000000-E	610	45,855	TON	ASPHALT CONC BASE COURSE, TYPE B25.0C
1498000000-E	610	11,985	TON	ASPHALT CONC INTERMEDIATE COURSE, TYPE I19.0B
1508000000-E	610	12,150	TON	ASPHALT CONC INTERMEDIATE COURSE, TYPE I19.0D
1519000000-E	610	13,960	TON	ASPHALT CONC SURFACE COURSE, TYPE S9.5B
1550000000-E	610	27,650	TON	ASPHALT CONC SURFACE COURSE, TYPE S12.5D
1565000000-E	620	575	TON	ASPHALT BINDER FOR PLANT MIX, GRADE PG 70-22
1570000000-E	620	1,330	TON	ASPHALT BINDER FOR PLANT MIX, GRADE PG 76-22
1693000000-E	654	75	TON	ASPHALT PLANT MIX, PAVEMENT REPAIR
1840000000-E	665	39,740	LF	MILLED RUMBLE STRIPS
2099000000-E	816	6,278	LF	SHOULDER DRAIN
2110000000-E	816	6,278	LF	4" SHOULDER DRAIN PIPE
2121000000-E	816	142	LF	4" OUTLET PIPE (SHOULDER DRAINS)
2132000000-N	816	6	EA	CONCRETE PAD FOR SHOULDER DRAIN PIPE OUTLET
2209000000-E	838	8.4	CY	ENDWALLS
2253000000-E	840	10.434	CY	PIPE COLLARS
2264000000-E	840	1.242	CY	PIPE PLUGS
2286000000-N	840	111	EA	MASONRY DRAINAGE STRUCTURES
2308000000-E	840	72	LF	MASONRY DRAINAGE STRUCTURES
2354000000-N	840	5	EA	FRAME WITH GRATE, STD 840.22
2354200000-N	840	7	EA	FRAME WITH GRATE, STD 840.24
2364000000-N	840	6	EA	FRAME WITH TWO GRATES, STD 840.16
2364200000-N	840	7	EA	FRAME WITH TWO GRATES, STD 840.20
2365000000-N	840	57	EA	FRAME WITH TWO GRATES, STD 840.22
2366000000-N	840	24	EA	FRAME WITH TWO GRATES, STD 840.24
2396000000-N	840	10	EA	FRAME WITH COVER, STD 840.54
2451000000-N	840	6	EA	CONCRETE APRON FOR DROP INLETS
2462000000-E	SP	2	EA	**" SLUICE GATE (30")
2474000000-N	SP	Lump Sum		GENERIC DRAINAGE ITEM HAZARDOUS SPILL RETENTION BASIN
2556000000-E	846	2,615	LF	SHOULDER BERM GUTTER
2577000000-E	846	2,250	LF	CONCRETE EXPRESSWAY GUTTER
2655000000-E	852	2,400	SY	5" MONOLITHIC CONCRETE ISLANDS (KEYED IN)
2815000000-N	858	1	EA	ADJUSTMENT OF DROP INLETS
3030000000-E	862	9,750	LF	STEEL BM GUARDRAIL
3150000000-N	862	5	EA	ADDITIONAL GUARDRAIL POSTS
3210000000-N	862	8	EA	GUARDRAIL ANCHOR UNITS, TYPE CAT-1
3215000000-N	862	4	EA	GUARDRAIL ANCHOR UNITS, TYPE III
3270000000-N	SP	22	EA	GUARDRAIL ANCHOR UNITS, TYPE 350
3345000000-E	864	19,700	LF	REMOVE & RESET EXISTING GUARD-RAIL
3360000000-E	863	6,450	LF	REMOVE EXISTING GUARDRAIL
3503000000-E	866	5,370	LF	WOVEN WIRE FENCE, 47" FABRIC
3509000000-E	866	340	EA	4" TIMBER FENCE POSTS, 7'-6" LONG
3515000000-E	866	90	EA	5" TIMBER FENCE POSTS, 8'-0" LONG
3536000000-E	866	7,775	LF	CHAIN LINK FENCE, 48" FABRIC
3542000000-E	866	630	EA	METAL LINE POSTS FOR 48" CHAIN LINK FENCE
3548000000-E	866	40	EA	METAL TERMINAL POSTS FOR 48" CHAIN LINK FENCE
3557000000-E	866	1,160	LF	ADDITIONAL BARBED WIRE
3628000000-E	876	150	TON	PLAIN RIP RAP, CLASS I
3642000000-E	876	725	TON	PLAIN RIP RAP, CLASS A
3649000000-E	876	460	TON	PLAIN RIP RAP, CLASS B
3656000000-E	876	2,450	SY	FILTER FABRIC FOR DRAINAGE
3659000000-N	SP	1	EA	PREFORMED SCOUR HOLES WITH LEVEL SPREADER APRON
4048000000-E	902	5	CY	REINFORCED CONCRETE SIGN FOOT-INGS
4054000000-E	902	2	CY	PLAIN CONCRETE SIGN FOOTINGS
4060000000-E	903	4,185	LB	SUPPORTS, BREAKAWAY STEEL BEAM
4066000000-E	903	644	LB	SUPPORTS, SIMPLE STEEL BEAM
4072000000-E	903	1,423	LF	SUPPORTS, 3-LB STEEL U-CHANNEL
4078000000-E	903	4	EA	SUPPORTS, 2-LB STEEL U-CHANNEL
4082200000-N	SP	Lump Sum		OVERHEAD SIGN ASSEMBLY AT STA ********* (A AT STA 60+00)
4082200000-N	SP	Lump Sum		OVERHEAD SIGN ASSEMBLY AT STA ********* (B AT STA 72+00)
4082200000-N	SP	Lump Sum		OVERHEAD SIGN ASSEMBLY AT STA ********* (C AT STA 87+00)
4082200000-N	SP	Lump Sum		OVERHEAD SIGN ASSEMBLY AT STA ********* (D AT STA 94+50)
4082200000-N	SP	Lump Sum		OVERHEAD SIGN ASSEMBLY AT STA ********* (E AT STA 109+00)
4082200000-N	SP	Lump Sum		OVERHEAD SIGN ASSEMBLY AT STA ********* (F AT STA 119+00)
4096000000-N	904	6	EA	SIGN ERECTION, TYPE D
4102000000-N	904	55	EA	SIGN ERECTION, TYPE E
4108000000-N	904	11	EA	SIGN ERECTION, TYPE F
4110000000-N	904	7	EA	SIGN ERECTION, TYPE *** (GROUND MOUNTED) (A)
4110000000-N	904	5	EA	SIGN ERECTION, TYPE *** (GROUND MOUNTED) (B)
4114000000-N	904	4	EA	SIGN ERECTION, MILEMARKERS
4127000000-N	SP	Lump Sum		LIGHTING FOR OVERHEAD SIGN AS-SEMBLY AT STA ******* (A AT STA 60+00)
4127000000-N	SP	Lump Sum		LIGHTING FOR OVERHEAD SIGN AS-SEMBLY AT STA ******* (B AT STA 72+00)
4127000000-N	SP	Lump Sum		LIGHTING FOR OVERHEAD SIGN AS-SEMBLY AT STA ******* (C AT STA 87+00)
4127000000-N	SP	Lump Sum		LIGHTING FOR OVERHEAD SIGN AS-SEMBLY AT STA ******* (D AT STA 94+50)
4127000000-N	SP	Lump Sum		LIGHTING FOR OVERHEAD SIGN AS-SEMBLY AT STA ******* (E AT STA 109+00)
4127000000-N	SP	Lump Sum		LIGHTING FOR OVERHEAD SIGN AS-SEMBLY AT STA ******* (F AT STA 119+00)
4129000000-N	906	4	EA	RELOCATE SIGN, TYPE ***** (A)
4129000000-N	906	1	EA	RELOCATE SIGN, TYPE ***** (D)
4138000000-N	907	3	EA	DISPOSAL OF SUPPORT, STEEL BEAM
4152000000-N	907	4	EA	DISPOSAL OF SIGN SYSTEM, STEEL BEAM
4155000000-N	907	28	EA	DISPOSAL OF SIGN SYSTEM, U-CHANNEL
4158000000-N	907	1	EA	DISPOSAL OF SIGN SYSTEM, WOOD
4192000000-N	907	1	EA	DISPOSAL OF SUPPORT, U-CHANNEL
4238500000-N	907	4	EA	DISPOSAL OF SIGN, MILEMARKER
4412000000-E	SP	1,240	SF	WORK ZONE SIGNS (STATIONARY)
4412100000-E	SP	775	SF	WORK ZONE SIGNS (PORTABLE)
4412200000-E	SP	172	SF	WORK ZONE SIGNS (BARRICADE MOUNTED)
4415000000-N	1115	2	EA	FLASHING ARROW PANELS, TYPE C
4420000000-N	1120	2	EA	CHANGEABLE MESSAGE SIGN
4430000000-N	1130	375	EA	DRUMS
4435000000-N	1135	375	EA	CONES
4446100000-E	SP	372	LF	BARRICADES (TYPE III)
4455000000-N	1150	440	MD	FLAGGER
4465000000-N	1160	4	EA	TEMPORARY CRASH CUSHIONS
4470000000-N	1160	2	EA	RESET TEMPORARY CRASH CUSHIONS
4480000000-N	1165	6	EA	TRUCK MOUNTED IMPACT ATTENUA-TOR (60 MPH)
4485000000-E	1170	20,633	LF	PORTABLE CONCRETE BARRIER
4490000000-E	1170	300	LF	PORTABLE CONCRETE BARRIER (ANCHORED)

5/28/99

PROJECT REFERENCE NO.	SHEET NO.
4411	3

SHEET 2 OF 2

ItemNumber	Sec #	Quantity	Unit	Description
4500000000-E	1170	38,860	LF	RESET PORTABLE CONCRETE BARRIER
4615000000-E	1205	2,427	LF	REMOVABLE TAPE PAVEMENT MARKING LINES (4")
4625000000-E	1205	84	LF	REMOVABLE TAPE PAVEMENT MARKING LINES (8")
4650000000-N	1251	1,728	EA	TEMPORARY RAISED PAVEMENT MARKERS
4810000000-E	1205	110,630	LF	PAINT PAVEMENT MARKING LINES (4")
4815000000-E	1205	307,556	LF	PAINT PAVEMENT MARKING LINES (6")
4820000000-E	1205	200	LF	PAINT PAVEMENT MARKING LINES (8")
4825000000-E	1205	9,498	LF	PAINT PAVEMENT MARKING LINES (12")
4835000000-E	1205	484	LF	PAINT PAVEMENT MARKING LINES (24")
4840000000-N	1205	64	EA	PAINT PAVEMENT MARKING CHARACTER
4845000000-N	1205	204	EA	PAINT PAVEMENT MARKING SYMBOL
4847000000-E	SP	40,415	LF	POLYUREA PAVEMENT MARKING LINES (4")
4847100000-E	SP	67,876	LF	POLYUREA PAVEMENT MARKING LINES (6")
4847110000-E	SP	84	LF	POLYUREA PAVEMENT MARKING LINES (8")
4847120000-E	SP	2,850	LF	POLYUREA PAVEMENT MARKING LINES (12")
4847140000-E	SP	310	LF	POLYUREA PAVEMENT MARKING LINES (24")
4847200000-N	SP	44	EA	POLYUREA PAVEMENT MARKING CHARACTER
4847220000-N	SP	110	EA	POLYUREA PAVEMENT MARKING SYMBOL
4855000000-E	1205	92,804	LF	REMOVAL OF PAVEMENT MARKING LINES (6")
4865000000-E	1205	2,620	LF	REMOVAL OF PAVEMENT MARKING LINES (12")
4900000000-N	1252	25	EA	PERMANENT RAISED PAVEMENT MARKERS
4905000000-N	1253	1,644	EA	SNOWPLOWABLE PAVEMENT MARKERS
5020000000-N	1401	1	EA	PORTABLE DRIVE UNIT
5120000000-N	1407	1	EA	ELECTRIC SERVICE POLES *** ********* (30', CLASS 4)
5125000000-E	1407	260	LF	ELECTRIC SERVICE LATERAL ********** (3 #1/0 USE, 2"C)
5155000000-E	1409	545	LF	ELECTRICAL DUCT, TYPE BD, SIZE ***** (2")
5155000000-E	1409	331	LF	ELECTRICAL DUCT, TYPE BD, SIZE ***** (3")
5155000000-E	1409	56	LF	ELECTRICAL DUCT, TYPE BD, SIZE ***** (6")
5170000000-E	1410	296	LF	** #8 W/G FEEDER CIRCUIT (2)
5175000000-E	1410	387	LF	** #6 W/G FEEDER CIRCUIT (2)
5185000000-E	1410	1,904	LF	** #2 W/G FEEDER CIRCUIT (2)
5205000000-E	1410	1,568	LF	** #8 W/G FEEDER CIRCUIT IN *****" CONDUIT (2, 1.5" C)
5210000000-E	1410	1,440	LF	** #6 W/G FEEDER CIRCUIT IN *****" CONDUIT (2, 1.5" C)
5220000000-E	1410	2,739	LF	** #2 W/G FEEDER CIRCUIT IN *****" CONDUIT (2, 1.5" C)
5240000000-N	1411	16	EA	ELECTRICAL JUNCTION BOXES ********** (PC18)
5255000000-N	1413	Lump Sum		PORTABLE LIGHTING
5262000000-E	SP	57.2	CY	GENERIC LIGHTING ITEM HIGH MOUNT FOUNDATIONS
5265000000-E	SP	225	LF	GENERIC LIGHTING ITEM ELECTRICAL DUCT, TYPE JA, SIZE 3"
5265000000-E	SP	327	LF	GENERIC LIGHTING ITEM ELECTRICAL DUCT, TYPE JA, SIZE 4"
5265000000-E	SP	60	LF	GENERIC LIGHTING ITEM ELECTRICAL DUCT, TYPE JA, SIZE 6"
5270000000-N	SP	4	EA	GENERIC LIGHTING ITEM 100' HIGH MOUNT STANDARD
5270000000-N	SP	4	EA	GENERIC LIGHTING ITEM 120' HIGH MOUNT STANDARD
5270000000-N	SP	56	EA	GENERIC LIGHTING ITEM HM LUMINAIRE HPS (750 WATT, 480 VOLT AC)
5270000000-N	SP	2	EA	GENERIC LIGHTING ITEM LIGHTING CONTROL EQUIPMENT, TYPE RW (240/480 VOLT AC)
5300000000-E	1505	421	TON	FOUNDATION CONDITIONING MATERIAL, UTILITIES CLASS ******** (VI)
5306000000-E	SP	421	TON	BEDDING MATERIAL, UTILITIES CLASS ********** (IV)
5360000000-E	1510	43	LF	6" DI WATER PIPE, PC 350
5378000000-E	1510	2,450	LF	12" DI WATER PIPE, PC 350
5426000000-E	1510	1,564	LF	***" PVC WATER PIPE, SDR ***** (3", SDR 21)
5444000000-E	1510	1,529	LF	6" PVC WATER PIPE, SDR ******* (SDR 21)
5480000000-E	1510	3,090	LB	DUCTILE IRON WATER PIPE FITTINGS, 250# MIN WP
5534000000-E	1510	1	EA	**" GATE VALVE & VALVE BOX, *****WP (3", 200#WP)
5540000000-E	1510	2	EA	6" GATE VALVE & VALVE BOX, 200# WP
5558000000-E	1510	2	EA	12" GATE VALVE & VALVE BOX, *****WP (200#WP)
5672000000-N	1510	1	EA	RELOCATE EXISTING FIRE HYDRANT
5804000000-E	1530	2,374	LF	FILL OR REMOVE ABANDONED 12" PIPE, ********** (DI WATER)
6000000000-E	1605	4,200	LF	TEMPORARY SILT FENCE
6006000000-E	1610	300	TON	STONE FOR EROSION CONTROL, CLASS A
6009000000-E	1610	3,745	TON	STONE FOR EROSION CONTROL, CLASS B
6012000000-E	1610	2,335	TON	SEDIMENT CONTROL STONE
6015000000-E	1615	70.5	ACR	TEMPORARY MULCHING
6018000000-E	1620	2,500	LB	SEED FOR TEMPORARY SEEDING
6021000000-E	1620	10	TON	FERTILIZER FOR TEMPORARY SEEDING
6024000000-E	1622	1,700	LF	TEMPORARY SLOPE DRAINS
6027000000-N	1622	37	EA	INLET PROTECTION AT TEMPORARY SLOPE DRAINS
6029000000-E	SP	425	LF	SAFETY FENCE
6030000000-E	1630	30,900	CY	SILT EXCAVATION
6036000000-E	1631	20,200	SY	MATTING FOR EROSION CONTROL
6042000000-E	1632	2,000	LF	1/4" HARDWARE CLOTH
6084000000-E	1660	76.5	ACR	SEEDING & MULCHING
6087000000-E	1660	42	ACR	MOWING
6090000000-E	1661	600	LB	SEED FOR REPAIR SEEDING
6093000000-E	1661	1.5	TON	FERTILIZER FOR REPAIR SEEDING
6096000000-E	1662	1,675	LB	SEED FOR SUPPLEMENTAL SEEDING
6108000000-E	1665	57.25	TON	FERTILIZER TOPDRESSING
6114000000-N	SP	16.5	HR	SPECIALIZED HAND MOWING
6123000000-E	1670	1	ACR	REFORESTATION
6132000000-N	SP	16	EA	GENERIC EROSION CONTROL ITEM RESPONSE FOR EROSION CONTROL
7060000000-E	1705	2,150	LF	SIGNAL CABLE
7120000000-E	1705	17	EA	VEHICLE SIGNAL HEAD (12", 3 SECTION)
7264000000-E	1710	840	LF	MESSENGER CABLE (3/8")
7300000000-E	1715	2,570	LF	TRENCHING (UNPAVED)
7301000000-E	SP	190	LF	DIRECTIONAL DRILL POLYETHYLENE CONDUIT, *****" (** CONDUIT) (2", 2)
7324000000-N	1716	10	EA	JUNCTION BOX (STANDARD SIZE)
7336000000-N	1716	5	EA	JUNCTION BOX (OVER-SIZED)
7444000000-E	1725	1,930	LF	INDUCTIVE LOOP SAWCUT
7456000000-E	1726	2,390	LF	LEAD-IN CABLE
7516000000-E	1730	1,900	LF	COMMUNICATIONS CABLE (**FIBER) (12)
7552000000-N	1731	2	EA	INTERCONNECT CENTER
7566000000-N	1733	4	EA	DELINEATOR MARKER
7568000000-N	SP	1	EA	FURNISH FIBER-OPTIC RESTORATION KIT
7570000000-N	SP	1	EA	FURNISH FIBER-OPTIC POWER METER
7572000000-N	SP	1	EA	FURNISH OPTICAL LIGHT GENERATOR
7574000000-N	SP	1	EA	FURNISH FIBER-OPTIC TRANSCEIVER
7613000000-N	SP	8	EA	SOIL TEST
7636000000-N	1745	11	EA	SIGN FOR SIGNALS
7684000000-N	1750	2	EA	SIGNAL CABINET FOUNDATION
7756000000-N	1751	2	EA	CONTROLLER WITH CABINET (TYPE 2070L, BASE MOUNTED)
7780000000-N	SP	10	EA	DETECTOR CARD (TYPE 2070L)
7980000000-N	SP	2	EA	GENERIC SIGNAL ITEM CABINET BASE EXTENDER
7980000000-N	SP	2	EA	GENERIC SIGNAL ITEM FIBER-OPTIC TRANCEIVER, SELF-HEALING RING
7980000000-N	SP	8	EA	GENERIC SIGNAL ITEM METAL STRAIN SIGNAL POLE
7992000000-E	SP	48	CY	GENERIC SIGNAL ITEM DRILLED PIER FOUNDATION (42" DIA)

******* BEGIN SCHEDULE AA *******
******* (2 ALTERNATES) *******

1121000000-E AA1	520	68,120	TON	AGGREGATE BASE COURSE
1560000000-E AA1	620	3,375	TON	ASPHALT BINDER FOR PLANT MIX, GRADE PG 64-22

*** OR ***

#				
1121000000-E AA2	520	56,570	TON	AGGREGATE BASE COURSE
1489000000-E AA2	610	6,930	TON	ASPHALT CONC BASE COURSE, TYPE B25.0B
1560000000-E AA2	620	3,675	TON	ASPHALT BINDER FOR PLANT MIX, GRADE PG 64-22

******* END SCHEDULE AA *******

6/20/00

COMPUTED BY: B. JOHNSON DATE: JUNE 1, 2005
CHECKED BY: D. WILLIAMS DATE: JUNE 1, 2005

STATE OF NORTH CAROLINA
DIVISION OF HIGHWAYS

PROJECT REFERENCE NO.	SHEET NO.
I-4411	3-A

LIST OF PIPES, ENDWALLS, ETC. (FOR PIPES 48" & UNDER)

STATION	LOCATION (LT, RT, OR CL)	STRUCTURE NO. FROM	STRUCTURE NO. TO	TOP ELEVATION	INVERT ELEVATION	INVERT ELEVATION	SLOPE CRITICAL	CLASS III R.C. PIPE (UNLESS NOTED OTHERWISE) 12"	15"	18"	24"	30"	36"	42"	48"	BITUMINOUS COATED C.S. PIPE TYPE B (UNLESS NOTED OTHRWISE) 12" .064	15" .064	18" .064	24" .064	24"	30" .079	30"	36" .079	36"	42" .109	42"	48" .109	48"
-L- 22+40	LT	1		785.04																								
22+40	LT	1	2		783.37	783.35				12																		
27+60	LT	3		787.01																								
27+60	LT	3	4		780.06	780.07						8																
27+65	LT	4		788.71																								
28+14	RT	5	6		783.30	783.78					12																	
28+14	RT	6		787.28																								
28+14	RT	6	7		783.78	786.00													24									
38+82	LT	8	9			811.09				20																		
38+82	LT	9		814.09																								
42+63	LT	10	11			816.86				12																		
42+63	LT	11		819.86																								
48+03	RT	12		822.13																								
48+03	RT	12	12a		819.13	817.83				12																		
53+00	RT	13		818.07																								
53+78	RT	13	14		815.32	812.65			148																			
54+50	RT	14		815.40																								
65+00	RT	15		794.65																								
65+00	RT	15	16		777.22	778.5							24															
65+49	RT	17		796.50																								
65+49	RT	17	18		793.50	788.90												16										
67+48	LT	19		792.08																								
68+45	LT	19	20		789.08	785.50				188																		
69+35	LT	20		788.50																								
71+50	LT	21		784.41																								
72+70	LT	21	22		781.41	776.99				220																		
73+66	LT	22		779.99																								
74+35	LT	22	23		776.99	774.93				136																		
75+03	LT	23		777.93																								
75+32	LT	23	24		774.93	771.83					56																	
75+60	LT	24		774.82																								
75+60	LT	24	24a		766.50							20																
75+60	LT\RT	24a	25			773.40																						
75+60	RT	25		777.31																								
76+20	LT	24	26		766.55	766.94					132																	
76+90	LT	26		773.67																								
76+90	LT	26	27							12																		
77+02	MED	27a		774.48																								
78+14	LT	26	28		770.67	771.46				212																		
79+00	LT	28		776.31																								
79+72	LT	28	29		771.56	772.00				148																		
80+48	LT	29		775.00																								
74+51	RT	30		771.81																								
74+81	RT	30	31		768.81	766.00												52										
75+60	RT	25	32a		765.00	704.88																						
75+60	RT	32a	32		704.88	764.83						28																
75+60		32			770.00																							
75+60		32	33		764.88	764.00						4																
SHEET TOTALS									148	972	200	60	24					68	24									

STATION	15" SIDE DRAIN PIPE	18" SIDE DRAIN PIPE	24" SIDE DRAIN PIPE	ENDWALLS STD. 838.01, STD. 838.11 OR STD. 838.80 (UNLESS NOTED OTHERWISE) CU. YDS. R.C.P.	ENDWALLS CU. YDS. C.S.P.	QUANTITIES FOR DRAINAGE STRUCTURES PER EACH (0' THRU 5.0')	* TOTAL L.F. FOR PAY QUANTITY SHALL BE COL. 'A' + (1.3 X COL.'B') LIN. *FT. A 5.0' THRU 10.0'	LIN. *FT. B 10.0' AND ABOVE	C.B. STD. 840.01 OR STD. 840.02	FRAME, GRATES AND HOOD STANDARD 840.03 TYPE OF GRATE E	F	G		D.I. STD. 840.14 OR STD. 840.15	D.I. FRAME & GRATE STD. 840.16	M.D.I. TYPE "A" STD. 840.17 OR 840.26	M.D.I. TYPE "B" STD. 840.18 OR 840.27	M.D.I. TYPE "D" STD. 840.19 OR 840.28	M.D.I. FRAME WITH GRATE STD. 840.22	M.D.I. FRAME WITH TWO GRATES STD. 840.22	M.D.I. (N.S.) FRAME WITH GRATE STD. 840.24	M.D.I. (N.S.) FRAME WITH TWO GRATES STD. 840.24	J.B. STD. 840.31 OR 840.32	M.H. FRAME & COVER STD. 840.54	CONC. CATCH BASIN STD. 840.04	M.D.I. FRAME WITH TWO GRATES STD. 840.20	60" X 36" RCP TAPERED INLET (EA.)	ADJUST D.I.	T.B.J.B. STD. 840.34	30" WELDED STEEL PIPE	30" SLUICE GATE	BIT. COATED CORR. STEEL ELBOWS	CONC. COLLARS CL. "B" C.Y. STD 840.72	CONC. & BRICK PIPE PLUG, C.Y. STD. 840.71	PIPE REMOVAL LIN.FT.	REMARKS
-L- 22+40						1												1				1														REMOVE EXIST. DI
22+40																																	.447			REMOVE COLLAR AND EXTEND EXIST. 18" PIPE
27+60						1	1.95									1						1														
27+60																																				REMOVE PIPE & REPLACE
27+65						1	3.64																1	1												REMOVE EXIST. DI, REPLACE W/JB W/MH d=8.64
28+14																																	.553			EXTEND EXIST. 24" PIPE
28+14						1											1		1	1																3GI
28+14																																				
38+82																																	.447			EXTEND EXIST. 18" PIPE
38+82						1											1			1																REMOVE EXIST. D.I.
42+63																																	.447			EXTEND EXIST. 18" PIPE
42+63						1											1			1																REMOVE EXIST. D.I.
48+03						1											1			1																REMOVE EXIST. D.I.
48+03																																	.447			EXTEND EXIST. 18" PIPE
53+00						1											1			1																
53+78																																				
54+50						1										1			1	1																
65+00						1	5.0	7.43															1													EXTRA DEPTH, d=17.43
65+00																											1									SIDE TAPERED INLET
65+49						1											1			1																
65+49																																2@18"				
67+48						1											1									1										
68+45																																				
69+35						1											1									1										
71+50						1											1									1										
72+70																																		.065		PIPE PLUG
73+66						1											1									1										
74+35																																				
75+03						1											1									1										
75+32																																				
75+60						1	3.32										1			1																EXTRA DEPTH, d=8.32
75+60																																	.656			
75+60																														136						WSP TRENCHLESS INSTALL.
75+60						1	5.00	2.31									1			1																d=12.31
76+20																																				
76+90						1										1			1	1														.065		EXTRA DEPTH, 3GI, PIPE PLUG
76+90																																	.447			REMOVE EXIST. D.I.
77+02																												1								
78+14																																				
79+00						1											1			1																
79+72																																				
80+48						1											1					1														
74+51						1											1			1																
74+81																																				
75+60																														12			.656			
75+60																																				
75+60				2.3		1																			1						1		.656			HEADWALL W/30" SLUICE GATE & O.T.C.B.
75+60																																				
SHEET TOTALS				2.3		23	18.91	9.74								3	16	1	3	12		3	2	1	1	5	1	1		148	1	2@18"	4.756	.130		

ABBREVIATIONS

C.B.	CATCH BASIN
N.D.I.	NARROW DROP INLET
D.I.	DROP INLET
M.D.I.	MEDIAN DROP INLET
M.D.I. (N.S.)	MEDIAN DROP INLET (NARROW SLOT)
J.B.	JUNCTION BOX
M.H.	MANHOLE
T.B.D.I.	TRAFFIC BEARING DROP INLET
T.B.J.B.	TRAFFIC BEARING JUCTION BOX

17-MAR-2006 08:20 r:\pro1\i4411_rdy-sum.dgn wakabidavis AT RD214495

6/20/00

COMPUTED BY: B. Johnson DATE: June 1, 2005
CHECKED BY: D. Williams DATE: June 1, 2005

PROJECT REFERENCE NO.	SHEET NO.
I-4411	3-B

STATE OF NORTH CAROLINA
DIVISION OF HIGHWAYS

LIST OF PIPES, ENDWALLS, ETC. (FOR PIPES 48" & UNDER)

STATION / SIZE / THICKNESS OR GAUGE	LOCATION (LT,RT, OR CL)	STRUCTURE NO. FROM	STRUCTURE NO. TO	TOP ELEVATION	INVERT ELEVATION	INVERT ELEVATION	SLOPE CRITICAL	CLASS III R.C. PIPE (UNLESS NOTED OTHERWISE) 12"	15"	18"	24"	30"	36"	42"	48"	BITUMINOUS COATED C.S. PIPE TYPE B (UNLESS NOTED OTHRWISE) 12" .064	15" .064	18" .064	24" .064	24"	30" .079	30"	36" .079	36"	42" .109	42"	48" .109	48"	15" SIDE DRAIN PIPE	18" SIDE DRAIN PIPE	24" SIDE DRAIN PIPE	ENDWALLS STD. 838.01, STD. 838.11 OR STD. 838.80 (UNLESS NOTED OTHERWISE) CU. YDS. R.C.P.	C.S.P.	QUANTITIES FOR DRAINAGE STRUCTURES PER EACH (0' THRU 5.0')	* TOTAL L.F. FOR PAY QUANTITY SHALL BE COL. 'A' + (1.3 X COL.'B') LIN. *FT. A 5.0' THRU 10.0'	B 10.0' AND ABOVE	C.B. STD. 840.01 OR STD. 840.02	FRAME, GRATES AND HOOD STANDARD 840.03 TYPE OF GRATE E	F	G		D.I. STD. 840.14 OR STD. 840.15	D.I. FRAME & GRATE STD. 840.16	M.D.I. TYPE "A" STD. 840.17 OR 840.26	M.D.I. TYPE "B" STD. 840.18 OR 840.27	M.D.I. TYPE "D" STD. 840.19 OR 840.28	M.D.I. FRAME WITH GRATE STD. 840.22	M.D.I. FRAME WITH TWO GRATES STD. 840.22	M.D.I. (N.S.) FRAME WITH GRATE STD. 840.24	M.D.I. (N.S.) FRAME WITH TWO GRATES STD. 840.24	J.B. STD. 840.31 OR 840.32	M.H. FRAME & COVER STD. 840.54	CONC. CATCH BASIN STD. 840.04	M.D.I. FRAME WITH TWO GRATES STD. 840.20		ADJUST D.I.	T.B.J.B. STD. 840.34	30" WELDED STEEL PIPE	SLUICE GATE	BIT. COATED CORR. STEEL ELBOWS	CONC. COLLARS CL. "B" C.Y. STD 840.72	CONC. & BRICK PIPE PLUG, C.Y. STD. 840.71	PIPE REMOVAL LIN.FT.	REMARKS
-L- CONT																																																																
75+60	RT	25	34		773.56	773.92				138																																																						
77+01	RT	34		776.92																														1											1			1																
77+08	RT	34	35		773.92	773.96				8																																																						
77+15	RT	35		776.96																														1											1			1																
76+07	RT	36	37									16																				2.3																											1					HEADWALL WITH SLUICE GATE
81+00	LT	38		780.76																														1																		1					1							REMOVE EXIST. D.I.
81+48	LT	38	39		776.51	780.14				100																																																							
82+00	LT	39		783.24																														1											1			1																
82+75	LT	39	40		780.24	782.61				152																																																						
83+50	LT	40		785.61																														1											1			1																
85+27	RT	41		787.74																														1	.64																1	1													
85+27	RT	41	42		782.10	782.04					24																																																					
85+65	LT	43		788.94																														1											1			1																REMOVE EXIST. D.I.
86+31	LT	43	44		784.88	785.29				132																																																						
86+98	LT	44		788.39																														1											1			1																
87+77	LT	44	45		785.39	790.65				152																																																						
88+50	LT	45		793.65	790.65																													1											1			1																
89+96	RT	46		794.05																														1	2.43																1														
89+96	RT	46	47		786.62	786.34					28																																																					
90+71	LT	48		797.07	794.07																													1											1			1																REMOVE EXIST. D.I.
91+38	LT	48	49		794.07	796.13				132																																																						
92+03	LT	49		799.13	796.13																													1											1			1																
92+96	RT	50		800.31																														1	1.49																1	1													EXTRA DEPTH 2GI (d=6.49′)
92+96	RT	50	51		793.82	793.54					32																																																					
93+52	RT	50	52		797.31	798.93				96																																																							
93+99	RT	52		801.93																														1											1			1																
94+03	RT	52	53		798.93	799.01				4																																																							
94+08	RT	53		802.01	799.01																													1											1			1																
95+60	RT	–	–																																																												1.047		PLUG 72" CONC. PIPE
93+81	LT	54		802.02																														1	.05										1			1																REMOVE EXIST. D.I.
94+66	LT	54	55		796.97	799.48				164																																																							
95+46	LT	55		802.48																														1											1			1																
97+02	LT	56		804.88																														1											1			1																
97+02	LT	56	57		801.88					16																																																			.447			REMOVE EXIST. D.I., EXTEND EXIST 18" RCP
96+90	RT	58		806.75																														1	3.54										1			1																EXTRA DEPTH 2GI (d=8.54′)
96+90	RT	58	59		798.21	794.88													36																																													
101+77	RT	60	60A		806.58	806.51				20																																																			.447			EXTEND EXIST. 18" PIPE
102+47	LT	61		813.66																														1											1			1																
102+47	LT	61	62		810.66					16																																																			.447			REMOVE D.I. COLLAR & EXTEND
114+50	RT	63	64	840.26	839.98					16																																																			.447			REMOVE D.I. COLLAR & EXTEND
		64		842.98	839.98																													1											1			1																
SHEET TOTALS										1,146	84	16							36													2.3		21	8.15										17			17			3	3					1		1		1.788	1.047		

ABBREVIATIONS

- C.B. CATCH BASIN
- N.D.I. NARROW DROP INLET
- D.I. DROP INLET
- M.D.I. MEDIAN DROP INLET
- M.D.I. (N.S.) MEDIAN DROP INLET (NARROW SLOT)
- J.B. JUNCTION BOX
- M.H. MANHOLE
- T.B.D.I. TRAFFIC BEARING DROP INLET
- T.B.J.B. TRAFFIC BEARING JUCTION BOX

31-MAY-2005 16:30
r:\proj\i4411_rdy_sum.dgn
$$$$USERNAME$$$$

COMPUTED BY: B. Johnson DATE: June 1, 2005
CHECKED BY: D. Williams DATE: June 1, 2005

6/20/00

STATE OF NORTH CAROLINA
DIVISION OF HIGHWAYS

PROJECT REFERENCE NO.	SHEET NO.
I-4411	3-C

LIST OF PIPES, ENDWALLS, ETC. (FOR PIPES 48" & UNDER)

STATION	LOCATION (LT,RT, OR CL)	STRUCTURE NO. FROM	STRUCTURE NO. TO	TOP ELEVATION	INVERT ELEVATION	INVERT ELEVATION	SLOPE CRITICAL	CLASS III R.C. PIPE (UNLESS NOTED OTHERWISE) 12"	15"	18"	24"	30"	36"	42"	48"	BITUMINOUS COATED C.S. PIPE TYPE B (UNLESS NOTED OTHRWISE) 12" .064	15" .064	18" .064	24" .064	30" .079	36" .079	42" .109	48" .109	15" SIDE DRAIN PIPE	18" SIDE DRAIN PIPE	24" SIDE DRAIN PIPE	ENDWALLS STD. 838.01, STD. 838.11 OR STD. 838.80 (UNLESS NOTED OTHERWISE) CU. YDS. R.C.P.	C.S.P.
-SRB- 20+89	RT	65		796.44																								
22+23	RT	65	66		790.59	784.95							276															
23+78	RT	66		790.70																								
24+70	RT	66	67		784.45	781.04								192														
25+70	RT	67		786.94																								
25+76	RT	67	68		776.00	775.00									24													
20+27	LT	69		799.46																								
20+56	LT/RT	65	69		790.69	793.71							84															
20+00	LT	69	70	799.46	793.71	796.04						60																
20+37	LT	69	71		794.59	794.96					80																	
-RPB- 11+99	RT	71		798.46																								
13+49	LT	71	72		795.46	800.79				292																		
15+00	LT	72		803.89																								
15+00	LT	72	73		801.14	804.34			68																			
15+00	RT	73		807.09																								
-RPC- 14+01		75	74		807.50	807.07						72																
14+24	LT	75		812.40																								
14+37	LT	75	76		807.50	807.81					20																	
14+50	LT	76		812.56																								
15+00	LT	76	77		807.81	809.20					96																	
15+51	LT	77		813.95																								
17+25	LT	77	78		809.20	812.48				352																		
19+00	LT	78		815.48																								
-SRC- 10+47		79			834.18	833.95				72																		
12+50		80			830.50	824.58				80																		
15+99	RT	81		827.00																								
16+72	RT	81	82		824.00	819.95				140																		
17+42	RT	82		822.95																								
17+70	RT	82	83		819.95	818.00				56																		
18+00	RT	83		821.00																								
19+51	RT	83	84		817.90	812.75				296																		
21+00	RT	84		817.00																								
20+94	RT	84	84a		812.75	818.00				56																		
20+91	RT	84a		821.00																								
20+21	RT	84a	84b		818.00	825.70				244																		
19+54	RT	84b		828.70																								
22+08	RT	84	85		812.25	811.10					212																	
23+15	RT	85		815.85																								
23+14		85	86		811.10	810.73					68																	
26+52	LT	87																							28			
31+07	LT	88																						20				
31+00	RT	89		807.70																								
32+01	RT	89	90		803.70	801.00				204																		
33+00	RT	90		804.00																								
SHEET TOTALS									68	1,792	476	132	360	192	24									20	28			

STATION	STRUCTURE NO. FROM	STRUCTURE NO. TO	QUANTITIES FOR DRAINAGE STRUCTURES PER EACH (0' THRU 5.0')	* TOTAL L.F. FOR PAY QUANTITY SHALL BE COL. 'A' + (1.3 X COL.'B') LIN. *FT. A 5.0' THRU 10.0'	B 10.0' AND ABOVE	C.B. STD. 840.01 OR STD. 840.02	FRAME, GRATES AND HOOD STANDARD 840.03 TYPE OF GRATE E	F	G	D.I. STD. 840.14 OR STD. 840.15	D.I. FRAME & GRATE STD. 840.16	M.D.I. TYPE "A" STD. 840.17 OR 840.26	M.D.I. TYPE "B" STD. 840.18 OR 840.27	M.D.I. TYPE "D" STD. 840.19 OR 840.28	M.D.I. FRAME WITH GRATE STD. 840.22	M.D.I. FRAME WITH TWO GRATES STD. 840.22	M.D.I. (N.S.) FRAME WITH GRATE STD. 840.24	M.D.I. (N.S.) FRAME WITH TWO GRATES STD. 840.24	J.B. STD. 840.31 OR 840.32	M.H. FRAME & COVER STD. 840.54	CONC. CATCH BASIN STD. 840.04	M.D.I. FRAME WITH TWO GRATES STD. 840.20		ADJUST D.I.	T.B.J.B. STD. 840.34	30" WELDED STEEL PIPE	30" SLUICE GATE	BIT. COATED CORR. STEEL ELBOWS	CONC. COLLARS CL. "B" C.Y. STD 840.72	CONC. & BRICK PIPE PLUG, C.Y. STD. 840.71	PIPE REMOVAL LIN.FT.	REMARKS
-SRB- 20+89	65		1	.85								1					1	1												.065		CAP & PLUG EX. 18" PIPE, 3GI
22+23	65	66																														
23+78	66		1	1.25								1					1	1														EXTRA DEPTH (D=6.25') , 3GI
24+70	66	67																														
25+70	67		1	5.00	0.94														1	1												EXTRA DEPTH (D=10.94')
25+76	67	68																														
20+27	69		1	0.75								1					1	1													419	3GI
20+56	65	69																														
20+00	69	70																													17	REMOVE DI
20+37	69	71																													60	
-RPB- 11+99	71		1									1			1	1																REMOVE DI COLLAR AND EXTEND, 3GI
13+49	71	72																														
15+00	72		1										1			1																
15+00	72	73																														
15+00	73		1										1			1																
-RPC- 14+01	75	74																														
14+24	75		1																1	1												
14+37	75	76																														
14+50	76		1										1			1																
15+00	76	77																														
15+51	77		1										1			1																
17+25	77	78																														
19+00	78		1										1			1																
-SRC- 10+47	79																															
12+50	80																															
15+99	81		1										1					1														
16+72	81	82																														
17+42	82		1										1					1														
17+70	82	83																														
18+00	83		1										1					1														
19+51	83	84																														
21+00	84		1									1					1	1														3GI
20+94	84	84a																														
20+91	84a		1										1			1																
20+21	84a	84b																														
19+54	84b		1										1			1																
22+08	84	85																														
23+15	85		1									1					1	1														3GI
23+14	85	86																														
26+52	87																															
31+07	88																															
31+00	89		1										1					1														
32+01	89	90																														
33+00	90		1										1					1														
SHEET TOTALS			20	7.85	0.94							6	12		1	8	5	10	2	2										.065	496	

ABBREVIATIONS

- C.B. CATCH BASIN
- N.D.I. NARROW DROP INLET
- D.I. DROP INLET
- M.D.I. MEDIAN DROP INLET
- M.D.I. (N.S.) MEDIAN DROP INLET (NARROW SLOT)
- J.B. JUNCTION BOX
- M.H. MANHOLE
- T.B.D.I. TRAFFIC BEARING DROP INLET
- T.B.J.B. TRAFFIC BEARING JUCTION BOX

31-MAY-2005 16:31
r:\proj\i4411_rdy_sum.dgn
$$$$USERNAME$$$$

RD223182 Tuesday May 31 2005 i4411_rdy_sum3c bwjohnson rd-01oce34

COMPUTED BY: B. Johnson DATE: June 1, 2005
CHECKED BY: D. Williams DATE: June 1, 2005

6/20/00

STATE OF NORTH CAROLINA
DIVISION OF HIGHWAYS

PROJECT REFERENCE NO.	SHEET NO.
I-4411	3-D

LIST OF PIPES, ENDWALLS, ETC. (FOR PIPES 48" & UNDER)

STATION	LOCATION (LT,RT, OR CL)	STRUCTURE NO. FROM	STRUCTURE NO. TO	TOP ELEVATION	INVERT ELEVATION	INVERT ELEVATION	SLOPE CRITICAL	CLASS III R.C. PIPE (UNLESS NOTED OTHERWISE) 12"	15"	18"	24"	30"	36"	42"	48"	BITUMINOUS COATED C.S. PIPE TYPE B (UNLESS NOTED OTHRWISE) 12" .064	15" .064	18" .064	24" .064	24"	30" .079	30"	36" .079	36"	42" .109	42"	48" .109	48"
-SRC- (CONT) 33+99	RT	90	91		800.90	797.76				204																		
35+00	RT	91		800.76																								
35+99	RT	91	92		797.66	793.00				200																		
37+00	RT	92		796.00																								
37+00	RT	92	93		793.00					20																		
38+27	RT	92	94		792.80	791.80					252																	
39+52	RT	94		797.88																								
39+52	RT	95		796.15																								
39+52	RT	94	95		791.60	790.34					24																	
35+17	LT	96																										
36+39	LT	97																										
36+98	LT	98	98a		798.50					16																		
-SRA- 14+57	LT	99																										
17+00	LT/RT	100			812.99	814.92					76																	
23+49	LT	101		818.14																								
23+49	LT/RT	101a	102		796.69	792.69						140																
24+26	LT	101	103		815.39	813.21			144																			
25+00	LT	103		815.96																								
25+59	LT	103	104		812.96	810.78				112																		
26+17	LT	104		813.88																								
26+19	LT	104	105		810.68	807.33												20										
29+04	RT	106		807.50																								
29+04	RT/LT	106	107		804.50	798.00				72																		
29+04	LT	107		801.00																								
29+97	LT	107	108		798.00	774.34												172										
30+90	LT	108		784.60																								
30+97	LT	108	108a		774.34	773.43						16																
31+24	LT	109		786.00																								
31+24	LT	109	110		773.21	772.74						16																
33+03	LT	111	111a		792.88	792.33				24																		
33+05	RT	112		801.96																								
33+05	RT	112	113		796.62	796.39				8																		
33+05	RT	113		799.39	796.39																							
36+49	RT	114		794.06	787.74																							
36+48	RT	115		795.33																								
36+48	RT	114	115		787.74	788.22				8																		
36+97	RT	115	116		788.93	790.26				92																		
37+43	RT	116		793.26																								
-RPA- 14+52	RT	117		814.47																								
16+00		118	119		812.38	812.89				64																		
16+00	LT	119		815.55																								
16+45	LT	119	120		812.89	813.16			96																			
16+92	LT	120		815.08																								
20+00	RT	121		812.91																								
20+25	RT	121	122		810.16	810.01			44																			
20+48	RT	122		813.08																								
20+48	RT	122	123		810.01	801.53											28											
21+00	RT	122	125		810.01	810.71			52																			
21+00	RT	125	124		810.71	797.84																						
SHEET TOTALS									336	820	352	172					28	192										

STATION	15" SIDE DRAIN PIPE	18" SIDE DRAIN PIPE	24" SIDE DRAIN PIPE	ENDWALLS STD. 838.01, STD. 838.11 OR STD. 838.80 (UNLESS NOTED OTHERWISE) CU. YDS. R.C.P.	C.S.P.	QUANTITIES FOR DRAINAGE STRUCTURES PER EACH (0' THRU 5.0')	* TOTAL L.F. FOR PAY QUANTITY SHALL BE COL. 'A' + (1.3 X COL.'B') LIN. *FT. A 5.0' THRU 10.0'	B 10.0' AND ABOVE	C.B. STD. 840.01 OR STD. 840.02	FRAME, GRATES AND HOOD STANDARD 840.03 TYPE OF GRATE E	F	G		D.I. STD. 840.14 OR STD. 840.15	D.I. FRAME & GRATE STD. 840.16	M.D.I. TYPE "A" STD. 840.17 OR 840.26	M.D.I. TYPE "B" STD. 840.18 OR 840.27	M.D.I. TYPE "D" STD. 840.19 OR 840.28	M.D.I. FRAME WITH GRATE STD. 840.22	M.D.I. FRAME WITH TWO GRATES STD. 840.22	M.D.I. (N.S.) FRAME WITH GRATE STD. 840.24	M.D.I. (N.S.) FRAME WITH TWO GRATES STD. 840.24	J.B. STD. 840.31 OR 840.32	M.H. FRAME & COVER STD. 840.54	CONC. CATCH BASIN STD. 840.04	M.D.I. FRAME WITH TWO GRATES STD. 840.20		ADJUST D.I.	T.B.J.B. STD. 840.34	30" WELDED STEEL PIPE	30" SLUICE GATE	BIT. COATED CORR. STEEL ELBOWS	CONC. COLLARS CL. "B" C.Y. STD 840.72	CONC. & BRICK PIPE PLUG, C.Y. STD. 840.71	PIPE REMOVAL LIN.FT.	REMARKS
-SRC- (CONT) 33+99																																				
35+00						1											1					1														
35+99																																				
37+00						1										1					1	1														3GI
37+00																																	.447			EXTEND EXIST. 18" PIPE
38+27																																				
39+52						1																	1	1												
39+52						1											1				1	1														3GI
39+52																																				
35+17	20																																			
36+39	20																																			
36+98																																	.447			EXTEND EXIST. 18" PIPE
-SRA- 14+57	24																																			
17+00																																				
23+49						1											1					1														
23+49																																				
24+26																																				
25+00						1											1					1														
25+59																																				
26+17						1											1					1														
26+19																																2@18"				
29+04						1											1					1														
29+04																																				
29+04						1											1					1														
29+97																																				
30+90						1	5.00	0.26															1													
30+97																																				
31+24						1	5.00	2.79															1													
31+24																																				
33+03																																	.447			EXTEND EXIST. 18" PIPE
33+05						1	.34																1	1												
33+05																																				
33+05						1											1					1														REMOVE EXIST. DI
36+49						1	1.32										1					1														
36+48						1	2.11																1													REMOVE EXIST. DI
36+48																																				
36+97																																				
37+43						1											1					1														
-RPA- 14+52						1																		1					1							REMOVE EXIST. DI
16+00																																				
16+00						1												1		1																MIN. DEPTH D=2.66'
16+45																																				
16+92						1												1		1																MIN. DEPTH D=1.92'
20+00						1											1			1																
20+25																																				
20+48						1											1			1																
20+48																																2@15"				
21+00																																				
21+00																																				
SHEET TOTALS	64					21	13.77	3.05								1	12	2		4	2	11	5	3					1			2@18" 2@15"	1.34			

ABBREVIATIONS

C.B.	CATCH BASIN
N.D.I.	NARROW DROP INLET
D.I.	DROP INLET
M.D.I.	MEDIAN DROP INLET
M.D.I. (N.S.)	MEDIAN DROP INLET (NARROW SLOT)
J.B.	JUNCTION BOX
M.H.	MANHOLE
T.B.D.I.	TRAFFIC BEARING DROP INLET
T.B.J.B.	TRAFFIC BEARING JUCTION BOX

31-MAY-2005 16:31
r:\proj\i4411_rdy_sum.dgn
$$$$USERNAME$$$$

COMPUTED BY: D. PURYEAR DATE: 3/2/06
CHECKED BY: W. AKABI-DAVIS DATE: 3/2/06

PROJECT REFERENCE NO.	SHEET NO.
I-4411	3-E

STATE OF NORTH CAROLINA
DIVISION OF HIGHWAYS

LIST OF PIPES, ENDWALLS, ETC. (FOR PIPES 48" & UNDER)

STATION	LOCATION (LT,RT, OR CL)	STRUCTURE NO. FROM	STRUCTURE NO. TO	TOP ELEVATION	INVERT ELEVATION	INVERT ELEVATION	SLOPE CRITICAL	CLASS III R.C. PIPE (UNLESS NOTED OTHERWISE) 12"	15"	18"	24"	30"	36"	42"	48"	BITUMINOUS COATED C.S. PIPE TYPE B (UNLESS NOTED OTHRWISE) 12" .064	15" .064	18" .064	24" .064	30" .079	36" .079	42" .109	48" .109	15" SIDE DRAIN PIPE	18" SIDE DRAIN PIPE	24" SIDE DRAIN PIPE	ENDWALLS STD. 838.01, STD. 838.11 OR STD. 838.80 (UNLESS NOTED OTHERWISE) CU. YDS. R.C.P.	C.S.P.
-RPA- 21+00	RT/LT	124	126		797.84	802.66					92																	
21+00	RT	125		813.46																								
21+00		126	126a		802.66	803.90					28																	
21+00	LT	126		812.13																								
22+24	LT	126	127		802.66	810.08				144																		
23+50	LT	127		813.08																								
23+50	MED	127	128		810.08	810.98				76																		
23+50	RT	128		813.98																								
-RPD- 10+20	LT	129		809.58																								
10+20	LT	129	130		806.83	796.00											36											
10+85	LT	131		788.20																							2.3	
		131B	131		783.93	785.82						24																
11+70	LT	132		811.45																								
11+70	LT	132	133		808.70	801.00											40											
13+18	LT	134			798.20																						1.5	
		134B	134		793.02	798.20					52																	
13+45	LT	135		816.00																								
13+40	LT	135	136		813.75	798.60											40											
14+13	RT	14	137		810.40	799.15				116																		
14+88	RT	14	138		812.65	815.25			124																			
15+50	RT	138		818.00																								
15+02	LT	140	139		811.50	802.00													100									
15+50	LT	140		815.00																								
16+75	LT	140	141		812.00	820.23				236																		
17+99	LT	141		824.23																								
-YREV- 11+48	RT	142																						24				
11+80	RT	142B																						20				
12+23	RT	143																						20				
15+61	RT	144																						32				
23+45	RT	145		839.35																								
23+90	RT	145	146		836.18	835.92			84																			
24+31	RT	146		841.52																								
24+31	LT	146	147		835.67	835.49				56																		
24+31	LT	147		838.88																								
24+31	LT	147	148		835.49	832.60												20										
25+69	RT	149		844.92																								
25+70	RT	146	149		838.77	841.75			140																			
25+70	LT	150		843.25																								
25+70	LT	150	151		840.50	825.90											40											
26+65	RT	152		846.60																								
26+65	RT	152	153		843.85	826.10											44											
27+33	LT	154		847.73																								
27+33	LT	154	155		844.98	817.30											68											
31+55	RT	156		846.31																								
31+55	RT	156	157		843.56	827.70											40											
31+68	LT	158		846.06																								
31+68	LT	158	159		843.31	825.73											44											
32+30	LT	160		844.49																								
32+30	LT	160	161		841.74	829.00											32											
SHEET TOTALS									348	628	172	24					384	20	100					96			3.8	

STATION	LOCATION	FROM	TO	QUANTITIES FOR DRAINAGE STRUCTURES PER EACH (0' THRU 5.0')	* TOTAL L.F. FOR PAY QUANTITY SHALL BE COL. 'A' + (1.3 X COL.'B') LIN. *FT. A 5.0' THRU 10.0'	B 10.0' AND ABOVE	C.B. STD. 840.01 OR STD. 840.02	FRAME, GRATES AND HOOD STANDARD 840.03 TYPE OF GRATE E	F	G	D.I. STD. 840.14 OR STD. 840.15	D.I. FRAME & GRATE STD. 840.16	M.D.I. TYPE "A" STD. 840.17 OR 840.26	M.D.I. TYPE "B" STD. 840.18 OR 840.27	M.D.I. TYPE "D" STD. 840.19 OR 840.28	M.D.I. FRAME WITH GRATE STD. 840.22	M.D.I. FRAME WITH TWO GRATES STD. 840.22	M.D.I. (N.S.) FRAME WITH GRATE STD. 840.24	M.D.I. (N.S.) FRAME WITH TWO GRATES STD. 840.24	J.B. STD. 840.31 OR 840.32	M.H. FRAME & COVER STD. 840.54	CONC. CATCH BASIN STD. 840.04	M.D.I. FRAME WITH TWO GRATES STD. 840.20	ADJUST D.I.	T.B.J.B. STD. 840.34	30" WELDED STEEL PIPE	30" SLUICE GATE	BIT. COATED CORR. STEEL ELBOWS	CONC. COLLARS CL. "B" C.Y. STD 840.72	CONC. & BRICK PIPE PLUG, C.Y. STD. 840.71	PIPE REMOVAL LIN.FT.	REMARKS
-RPA- 21+00	RT/LT	124	126																													
21+00	RT	125		1										1			1															
21+00		126	126a																													
21+00	LT	126		1	4.47															1	1											EXTRA DEPTH D= 7.82'
22+24	LT	126	127																													
23+50	LT	127		1										1			1															
23+50	MED	127	128																													
23+50	RT	128		1										1			1															
-RPD- 10+20	LT	129		1										1			1															
10+20	LT	129	130																									2@15"				
10+85	LT	131		1																									.656			REMOVE HW, COLLAR AND EXTEND W/30" CSP
		131B	131																													
11+70	LT	132		1										1			1															
11+70	LT	132	133																									2@15"				
13+18	LT	134																											.553			REMOVE HW, COLLAR AND EXTEND
		134B	134																													
13+45	LT	135		1										1			1															
13+40	LT	135	136																									2@15"				
14+13	RT	14	137																													
14+88	RT	14	138																													
15+50	RT	138		1										1			1															
15+02	LT	140	139																													
15+50	LT	140		1									1			1	1															
16+75	LT	140	141																													
17+99	LT	141		1										1			1															
-YREV- 11+48	RT	142																														
11+80	RT	142B																														
12+23	RT	143																														
15+61	RT	144																														
23+45	RT	145		1							1	1																				D=3.17'
23+90	RT	145	146																													
24+31	RT	146		1	.85						1	1																				DI EXTRA DEPTH D=5.85'
24+31	LT	146	147																													
24+31	LT	147		1										1									1									EXTRA DEPTH D=3.39'
24+31	LT	147	148																									2@18"				REMOVE CONCRETE DITCH
25+69	RT	149		1							1	1																				D=3.17'
25+70	RT	146	149																													
25+70	LT	150		1										1									1									
25+70	LT	150	151																									2@15"				
26+65	RT	152		1										1			1															
26+65	RT	152	153																									2@15"			31'	
27+33	LT	154		1										1			1														32'	
27+33	LT	154	155																									2@15"			30'	
31+55	RT	156		1										1			1														30'	
31+55	RT	156	157																									2@15"				
31+68	LT	158		1										1			1															
31+68	LT	158	159																									2@15"				
32+30	LT	160		1										1			1															
32+30	LT	160	161																									2@15"				
SHEET TOTALS				21	5.32						3	3	1	15		1	14			1	1		2					18@15" 2@18"	1.209		123'	

ABBREVIATIONS

C.B.	CATCH BASIN
N.D.I.	NARROW DROP INLET
D.I.	DROP INLET
M.D.I.	MEDIAN DROP INLET
M.D.I. (N.S.)	MEDIAN DROP INLET (NARROW SLOT)
J.B.	JUNCTION BOX
M.H.	MANHOLE
T.B.D.I.	TRAFFIC BEARING DROP INLET
T.B.J.B.	TRAFFIC BEARING JUCTION BOX

6/20/00
02-MAR-2006 15:00
r:\proj\i4411_rdy_sum.dgn
$$$$USERNAME$$$$
RD223220 3/2/2006 i4411_rdy_sum dypuryear RD-Oce34

6/20/00

COMPUTED BY: B. Johnson DATE: June 1, 2005
CHECKED BY: D. Williams DATE: June 1, 2005

PROJECT REFERENCE NO.	SHEET NO.
I-4411	3-F

STATE OF NORTH CAROLINA
DIVISION OF HIGHWAYS

LIST OF PIPES, ENDWALLS, ETC. (FOR PIPES 48" & UNDER)

STATION	LOCATION (LT,RT, OR CL)	STRUCTURE NO. FROM	STRUCTURE NO. TO	TOP ELEVATION	INVERT ELEVATION	INVERT ELEVATION	SLOPE CRITICAL	CLASS III R.C. PIPE (UNLESS NOTED OTHERWISE) 12"	15"	18"	24"	30"	36"	42"	48"	BITUMINOUS COATED C.S. PIPE TYPE B (UNLESS NOTED OTHRWISE) 12" .064	15" .064	18" .064	24" .064	30" .079	36" .079	42" .109	48" .109
-YREV- 32+84	RT	162		843.16																			
32+84	RT	162	163		840.41	834.35											24						
32+40	LT	164		845.43																			
32+87	LT	164	165		842.26	838.71			88														
33+30	LT	165		843.25																			
33+30	LT	165	166		838.61	837.44												36					
33+30	LT	166		842.07																			
33+30	LT	166	167		837.44	828.80												28					
33+86	LT	168		841.57																			
33+86	LT	165	168		838.23	838.40			52														
41+78	LT	169																					
43+35	LT	170																					
44+31	RT	171																					
46+47	LT	172																					
47+08	LT	173				835.50				40													
47+11	RT	174																					
-L- 17+38	RT	1a				774.00				4													
SHEET TOTALS									140	44							24	64					
SHEET 3-A TOTAL									148	972	200	60	24					68	24				
SHEET 3-B TOTAL									0	1,146	84	16							36				
SHEET 3-C TOTAL									68	1,792	476	132	360	192	24								
SHEET 3-D TOTAL									336	820	352	172					28	192					
SHEET 3-E TOTAL									348	628	172	24					384	20	100				
SHEET 3-F TOTAL									140	44							24	64					
GRAND TOTAL									1040	5402	1284	404	384	192	24		436	344	160				
SAY																							

STATION	STRUCTURE NO. FROM	STRUCTURE NO. TO	15" SIDE DRAIN PIPE	18" SIDE DRAIN PIPE	24" SIDE DRAIN PIPE	ENDWALLS STD. 838.01, STD. 838.11 OR STD. 838.80 (UNLESS NOTED OTHERWISE) CU. YDS. R.C.P.	C.S.P.	QUANTITIES FOR DRAINAGE STRUCTURES PER EACH (0' THRU 5.0')	LIN. *FT. A 5.0' THRU 10.0'	B 10.0' AND ABOVE	C.B. STD. 840.01 OR STD. 840.02	FRAME, GRATES AND HOOD STANDARD 840.03 TYPE OF GRATE E	F	G
-YREV- 32+84	162							1						
32+84	162	163												
32+40	164							1						
32+87	164	165												
33+30	165							1						
33+30	165	166												
33+30	166							1						
33+30	166	167												
33+86	168							1						
33+86	165	168												
41+78	169			20										
43+35	170			72										
44+31	171		16											
46+47	172		20											
47+08	173													
47+11	174		28											
-L- 17+38	1a													
SHEET TOTALS			64	92				5	0					
SHEET 3-A TOTAL						2.3		23	18.91	9.74				
SHEET 3-B TOTAL						2.3		21	8.15					
SHEET 3-C TOTAL			20	28				20	7.85	0.94				
SHEET 3-D TOTAL			64					21	13.77	3.05				
SHEET 3-E TOTAL			96			3.8		21	5.32					
SHEET 3-F TOTAL			64	92				5	0					
GRAND TOTAL			244	120		8.4		111	54.0	13.73				
SAY									72.00					

STATION	FROM	TO	D.I. STD. 840.14 OR STD. 840.15	D.I. FRAME & GRATE STD. 840.16	M.D.I. TYPE "A" STD. 840.17 OR 840.26	M.D.I. TYPE "B" STD. 840.18 OR 840.27	M.D.I. TYPE "D" STD. 840.19 OR 840.28	M.D.I. FRAME WITH GRATE STD. 840.22	M.D.I. FRAME WITH TWO GRATES STD. 840.22	M.D.I. (N.S.) FRAME WITH GRATE STD. 840.24	M.D.I. (N.S.) FRAME WITH TWO GRATES STD. 840.24	J.B. STD. 840.31 OR 840.32	M.H. FRAME & COVER STD. 840.54	CONC. CATCH BASIN STD. 840.04	M.D.I. FRAME WITH TWO GRATES STD. 840.20	60" X 36" RCP TAPPERED INLET (EA.)	ADJUST D.I.	T.B.J.B. STD. 840.34	30" WELDED STEEL PIPE	30" SLUICE GATE	BIT. COATED CORR. STEEL ELBOWS	CONC. COLLARS CL. "B" C.Y. STD 840.72	CONC. & BRICK PIPE PLUG, C.Y. STD. 840.71	PIPE REMOVAL LIN.FT.	REMARKS
-YREV- 32+84	162					1			1																
32+84	162	163																			2@15"				
32+40	164		1	1																					
32+87	164	165																							
33+30	165		1	1																					EXTRA DEPTH (D=4.92')
33+30	165	166																			1@18"				
33+30	166				1				1																EXTRA DEPTH (D=4.25')
33+30	166	167																			1@18"				
33+86	168		1	1																					
33+86	165	168																							
41+78	169																								
43+35	170																								
44+31	171																								
46+47	172																								
47+08	173																					.894			COLLAR AND EXTEND (EA. END)
47+11	174																								
-L- 17+38	1a																					.447			COLLAR AND EXTEND
SHEET TOTALS			3	3	1	1			2												2@15" 2@18"	1.341			
SHEET 3-A TOTAL					3	16	1	3	12		3	2	1	1	5	1	1		148	1	2@18"	4.756	.130		
SHEET 3-B TOTAL						17			17			3	3					1		1		1.788	1.047		
SHEET 3-C TOTAL					6	12		1	8	5	10	2	2										.065	496	
SHEET 3-D TOTAL					1	12	2		4	2	11	5	3					1			2@18" 2@15"	1.340			
SHEET 3-E TOTAL			3	3	1	15		1	14			1	1		2						18@15" 2@18"	1.209		123	
SHEET 3-F TOTAL			3	3	1	1			2												2@15" 2@18"	1.341			
GRAND TOTAL			6	6	12	73	3	5	57	7	24	13	10	1	7	1	1	2	148	2	22@15" 8@18"	10.434	1.242	619	
SAY																									

ABBREVIATIONS

- C.B. CATCH BASIN
- N.D.I. NARROW DROP INLET
- D.I. DROP INLET
- M.D.I. MEDIAN DROP INLET
- M.D.I. (N.S.) MEDIAN DROP INLET (NARROW SLOT)
- J.B. JUNCTION BOX
- M.H. MANHOLE
- T.B.D.I. TRAFFIC BEARING DROP INLET
- T.B.J.B. TRAFFIC BEARING JUCTION BOX

17-MAR-2006 08:20
r:\proj\i4411_rdy-sum.dgn
wakabidavis AT RD214495

DIVISION OF HIGHWAYS
STATE OF NORTH CAROLINA

SUMMARY OF EARTHWORK

IN CUBIC YARDS

LOCATION	UNCLASSIFIED EXCAVATION	UNDERCUT	EMBT+%	BORROW	WASTE
SUMMARY 1					
-SRA- 10+50.00 TO 28+00.00	12,109		28,105	15,996	
-SRB- 10+50.00 TO 24+50.00	2,352		866		1,486
-RPA- 16+00.00 TO 28+00.00	19,656		8,545		11,111
-RPB- 15+00.00 TO 22+00.00	4,564		8,725	4,161	
-YREV- 11+50.00 TO 27+50.00	2,911		22,290	19,379	
-LLT- 14+00.00 TO 44+00.00	3,471		1,628		1,843
SUMMARY 1 TOTAL	45,063		70,160	39,536	14,439
SUMMARY 2					
-LLT- 44+00.00 TO 74+00.00	4,079		4,090	11	
SUMMARY 2 TOTAL	4,079		4,090	11	
SUMMARY 3					
-LLT- 74+00.00 TO 104+00.00	4,526		661	0	3,865
SUMMARY 3 TOTAL	4,526		661	0	3,865
SUMMARY 4					
-LLT- 104+00.00 TO 105+50.00	488		0	0	488
SUMMARY 4 TOTAL	488		0	0	488
SUMMARY 1 - 4 SUBTOTAL	54,156		74,911	39,547	18,792
USE SUITABLE WASTE IN LIEU OF BORROW				-18,792	-18,792
SUMMARY 1 - 4 TOTAL	54,156		74,911	20,755	0
SUMMARY 5					
-L-MED- 16+00.00 TO 46+00.00	3,842		64		3,778
SUMMARY 5 TOTAL	3,842		64		3,778
SUMMARY 6					
-L-MED- 46+00.00 TO 76+00.00	4,063		125		3,938
SUMMARY 6 TOTAL	4,063		125		3,938
SUMMARY 7					
-L-MED- 76+00.00 TO 106+00.00	4,099		138		3,961
SUMMARY 7 TOTAL	4,099		138		3,961
SUMMARY 8					
-L-MED- 106+00.00 TO 125+00.00	1,466		47		1,419
SUMMARY 8 TOTAL	1,466		47		1,419
SUMMARY 5 - 8 TOTAL	13,470		373		13,097
SUMMARY 9					
-RPC- 15+50.00 TO 28+50.00	325		18,163	17,838	
-RPD- 14+00.00 TO 18+50.00	455		6,008	5,553	
-SRC- 10+50.00 TO 37+50.00	1,702		17,579	15,877	
-YREV- 30+50.00 TO 48+00.00	3,729		21,896	18,167	
-DRWV- 10+50.00 TO 11+90.00	91		0		91
-LRT- 15+00.00 TO 45+00.00	3,875		1,144		2,731
SUMMARY 9 TOTAL	10,177		64,790	57,436	2,822
SUMMARY 10					
-LRT- 45+00.00 TO 75+00.00	13,857		4,240		9,617
SUMMARY 10 TOTAL	13,857		4,240		9,617
SUMMARY 11					
-LRT- 75+00.00 TO 105+00.00	2,394		6,562	4,168	
SUMMARY 11 TOTAL	2,394		6,562	4,168	
SUMMARY 12					
-LRT- 105+00.00 TO 125+00.00	2,013		896		1,117
SUMMARY 12 TOTAL	2,013		896		1,117
SUMMARY 9 - 12 SUBTOTAL	28,441		76,488	61,603	-13,556
USE SUITABLE WASTE IN LIEU OF BORROW				-13,556	-13,556
SUMMARY 9 - 12 TOTAL	28,441		76,488	48,047	0
ESTIMATE SHOULDER MATERIAL			33,600	33,600	
USE SELECT GRANULAR MATERIAL IN LIEU OF BORROW (CLASS II & CLASS III)				-1,000	
ESTIMATE LOSS DUE TO CLEAR & GRUBBING	-5,750			5,750	
PROJECT TOTAL	90,317		184,373	107,152	13,097
ESTIMATE 5% TO REPLACE TOPSOI ON BORROW PIT				5,358	
GRAND TOTAL	90,317		184,373	112,510	13,097
SAY	90,320			112,510	

PAVEMENT STRUCTURE VOLUME = 39,250 CY.

ESTIMATED UNDERCUT = 4,400 CY

COMPUTED BY: WAD DATE: 12/3/04
CHECKED BY: DW DATE: 12/8/05

PROJECT REFERENCE NO. 1-4411
SHEET NO. 3-G

COMPUTED BY: JQ DATE: 5-3-04
CHECKED BY: DW DATE: 12-6-04

6/16/99

PROJECT REFERENCE NO.	SHEET NO.
I-4411	3-H

STATE OF NORTH CAROLINA
DIVISION OF HIGHWAYS

"N" = DISTANCE FROM EDGE OF LANE TO FACE OF GUARDRAIL.
TOTAL SHOULDER WIDTH = DISTANCE FROM EDGE OF TRAVEL LANE TO SHOULDER BREAK POINT.
FLARE LENGTH = DISTANCE FROM LAST SECTION OF PARALLEL GUARDRAIL TO END OF GUARDRAIL.
W = TOTAL WIDTH OF FLARE FROM BEGINNING OF TAPER TO END OF GUARDRAIL.
G = GATING IMPACT ATTENUATOR TYPE 350
NG = NON-GATING IMPACT ATTENUATOR TYPE 350

GUARDRAIL SUMMARY

SURVEY LINE	BEG. STA.	END STA.	LOCATION	LENGTH			WARRANT POINT		"N" DIST. FROM E.O.L.	TOTAL SHOULDER WIDTH	FLARE LENGTH		W		ANCHORS								IMPACT ATTENUATOR TYPE 350			REMOVE EXISTING GUARDRAIL	REMOVE AND RESET EXISTING GUARDRAIL		REMARKS
				STRAIGHT	SHOP CURVED	DOUBLE FACED	APPROACH END	TRAILING END			APPROACH END	TRAILING END	APPROACH END	TRAILING END	TYPE 350	CAT-1	TYPE III						EA	G	NG				
-L-	15+00.00	18+50.00	RIGHT	350.00'			16+50.00		12'	15'	50'		1'		1	1													
-L-	55+50.00	60+87.50	LEFT	537.50'			59+62.50		12'	15'	50'		1'		1	1													
-L-	62+50.00	65+50.00	RIGHT	300.00'			64+00.00		12'	15'	50'		1'		1	1													
-L-	70+00.00	80+50.00	RIGHT	850.00'			72+00.00		12'	15'	50'		1'		1	1													
-L-	86+00.00	88+12.50	LEFT	212.50'			86+00.00		12'	15'	50'		1'		1	1													
-L-	93+00.00	99+50.00	RIGHT	650.00'			94+50.00		12'	15'	50'		1'		1	1													
-L-	118+00.00	120+00.00	RIGHT	200.00'			120+00.00		12'	15'	50'		1'		1	1													
-YREV-	23+37.00	26+87.00	RIGHT	350.00'					8'	11'					1		1												BRIDGE WARRANT
-YREV-	23+43.00	27+68.00	LEFT	425.00'					8'	11'					1		1												BRIDGE WARRANT
-YREV-	30+32.00	34+19.00	RIGHT	387.50'					8'	11'					1		1												BRIDGE WARRANT
-YREV-	31+12.00	34+12.00	LEFT	300.00'					8'	11'					1		1												BRIDGE WARRANT
-RAMPA-	18+50.00	22+00.00	RIGHT	350.00'			19+50.00								2														
-RAMPD-	10+00.00	15+00.00	LEFT	500.00'			14+00.00								1	1													
-SRA-	21+50.00	33+50.00	LEFT	1200.00'			33+00.00	22+50.00	6'	9'					2														
-SRA-	21+50.00	27+00.00	RIGHT	550.00'			22+50.00	26+00.00	6'	9'					2														
-SRC-	11+00.00	25+50.00	LEFT	1450.00'			24+50.00	12+00.00	6'	9'					2														
-SRC-	17+75.00	22+00.00	RIGHT	425.00'			18+00.00	21+00.00	6'	9'					2														
			SUB-TOTAL	9,037.50'											22	8	4												
		LESS ANCHOR UNIT DEDUCTIONS																											
			GRAU-350 22 @ 50.00' =	-1100.00'																									
			CAT-1 8 @ 6.25' =	-50.00'																									
			TYPE-III 4 @ 18.75' =	-75.00'																									
ADDITIONAL GUARDRAIL PER FFI (TOTAL X 25%)			TOTAL X 25%	1,925.00'																									
			GRAND TOTAL	9,737.50'																									
			SAY	9,750.00'																									
ADDITIONAL GUARDRAIL POSTS = 5 EACH																													
-L-	16+10.00	108+40.00	LEFT																								9,202.00		
-L-	18+00.00	123+26.00	RIGHT																								10,498.00		
																										TOTAL	19,700.00		
																										SAY	19,700.00		
-L-	15+60.00	19+60.00	RIGHT																							400.00			
-L-	44+43.76	48+06.18	RIGHT																							363.09			
-L-	44+93.13	48+70.54	LEFT																							377.63			
-L-	46+81.30	51+52.42	LEFT(EXIST RAMP)																							504.25			
-L-	47+07.89	50+86.85	LEFT(EXIST RAMP)																							414.40			
-L-	53+55.44	58+93.49	RIGHT																							538.60			
-L-	62+13.35	65+36.94	RIGHT																							324.38			
-L-	73+38.67	81+78.60	RIGHT																							840.52			
-L-	93+10.37	101+97.55	RIGHT																							887.83			
-YREV-	23+71.67	27+21.37	RIGHT																							363.54			
-YREV-	24+47.01	27+47.46	LEFT																							300.68			
-YREV-	30+14.77	33+36.09	RIGHT																							338.22			
-YREV-	30+42.95	34+06.85	LEFT																							363.94			
-SRA-	29+35.32	33+60.46	CL																							427.82			
																									TOTAL	6,444.90			
																									SAY	6,450.00			

17-MAR-2006 08:20
i4411_rdy_sum.dgn
wakobdavis AT R0214495

COMPUTED BY: DYP DATE: 2-14-05
CHECKED BY: D.WILLIAMS DATE: 2-1505

PROJECT REFERENCE NO.	SHEET NO.
1-4411	3-1

STATE OF NORTH CAROLINA
DIVISION OF HIGHWAYS

FENCE SUMMARY

CHAIN LINK FENCE

SURVEY LINE	BEG. STA.	END STA.	LOCATION	LENGTH	LINE POST	TERMINAL POST
-L-	22+42.00	34+50.67	LEFT	1,215.50'	99	8
-RPA-	13+52.97	27+26.81	RIGHT	1,439.25'	118	5
-RPB-	13+66.78	21+32.00	LEFT	736.73'	60	3
-RPC-	13+35.52	28+13.52	RIGHT	1,593.92'	130	9
-RPD-	10+50.00	18+47.35	LEFT	736.72'	60	4
-YREV-	18+26.00	21+97.57	RIGHT	391.50'	32	3
-YREV-	18+26.00	22+14.24	LEFT	417.69'	34	3
-YREV-	35+90.00	41+00.00	LEFT	508.63'	42	2
-YREV-	35+90.00	42+45.00	RIGHT	658.01'	54	2
TOTAL	—	—	—	7,697.95'	629	39
			SAY	7,775.00'	630	40

WOVEN WIRE FENCE

SURVEY LINE	BEG. STA.	END STA.	LOCATION	LENGTH	4" POST	5" POST
-L-	56+00.00	64+50.00	LEFT	850.28'	54	12
-L-	60+55.00	63+10.00	RIGHT	255.00'	18	—
-L-	66+50.00	72+00.00	LEFT	550.16'	34	9
-L-	66+95.00	69+30.00	RIGHT	236.56'	15	3
-L-	72+25.94	74+02.87	RIGHT	178.86'	9	6
-L-	75+30.00	76+30.00	RIGHT	136.05'	6	6
-L-	80+00.00	80+90.00	LEFT	90.00'	6	—
-L-	85+24.95	85+60.00	RIGHT	35.05'	3	—
-L-	87+70.00	90+00.00	LEFT	230.09'	16	—
-L-	95+00.00	105+50.00	LEFT	1,050.38'	67	15
-L-	113+61.17	115+27.47	RIGHT	167.23'	9	6
-SRA-	15+15.00	24+00.00	LEFT	927.00'	56	19
-YREV-/-SRA-	-YREV- 13+70.00	-SRA- 14+10.00	LEFT	654.00'	40	13
TOTAL	—	—	—	5,360.66'	334	89
			SAY	5,370.00'	340	90

ADDITIONAL BARBED WIRE = 1,160'

SHOULDER DRAINS SUMMARY

SURVEY LINE	BEG. STA.	END STA.	SHOULDER DRAIN PIPE (FT)	SHOULDER DRAIN PIPE (FT)	OUTLET PIPES (FT)	CONCRETE PADS (ea.)	OUTLETS STA.
NBL	71+00.00	75+60.00	460	460	18	0	74+50, 75+60
NBL	77+15.00	92+90.00	1575	1575	28	2	77+15, 79+50, 82+00, 85+30, 90+00
NBL	94+07.00	109+00.00	1493	1493	34	3	94+07, 96+90, 100+00, 103+00, 106+00
SBL	22+40.00	31+00.00	260	260	40	1	22+40, 25+00, 27+65
SBL	69+50.00	80+90.00	1140	1140	0	0	71+50, 75+03, 76+89+/-, 79+00
SBL	92+00.00	105+50.00	1350	1350	20	0	92+00, 93+84, 97+00, 102+45
	TOTAL		6278	6278	142	6	
	SAY		6278	6278	142	6	

PAVEMENT REMOVAL SUMMARY

SURVEY LINE	BEG. STA.	END STA.	LOCATION	ASPHALT REMOVAL (SQ YD.)	ASPHALT BREAKUP (SQ YD.)
—	-L- 31+27.00	-L- 34+68.00	SR 1205	559.56	
—	-L- 37+74.00	-YREV- 23+63.00	SR 1205	1,375.71	
—	-YREV- 23+56.00	-L- 52+33.00	SR 1206	2,403.92	
—	-RPC- 21+10.00	-YREV- 33+81.00	SR 1104	1,268.27	
-L-	14+00.00	105+50.00	SBL	10,166.67	
-L-	15+00.00	117+80.00	NBL	11,422.22	
-L-	120+20.00	125+25.00	NBL	561.11	
-L-	16+10.00	108+40.00	SBL	6,153.33	
-L-	18+00.00	123+26.00	NBL	7,017.33	
-L-	14+00.00	105+50.00	SBL (TEMP. PAV'T)	6,100.00	
-L-	15+00.00	117+80.00	NBL (TEMP. PAV'T)	6,853.33	
-L-	120+20.00	125+25.00	NBL (TEMP. PAV'T)	336.67	
-YREV-	25+00.00	36+05.00	EXISTING		524.56
-YREV-	30+64.20	35+00.00	EXISTING		968.44
TOTAL	—	—	—	54,217.82	1493.00
			SAY	54,230	1,500

6/16/99
11-OCT-2006 14:23
r:\roadway\proj\14411_fdt_sum.dgn
$$$$USERNAME$$$$

PROJ. REFERENCE NO.	SHEET NO.
I-4411	3- J

STATE OF NORTH CAROLINA
DIVISION OF HIGHWAYS

PARCEL INDEX SHEET

PARCEL No.	SHEET No.	PROPERTY OWNER NAME
1	4	DORIS K. BOSTIAN
2	4,5	BOBBY TSIABASSIS
3	5	MICHAEL PORCH
4	4,5	TRANSCO PROPERTY, LLC
5	5,11	INA HARRIS MARTIN, ET AL
6	5	TRANSCONTINENTAL GAS PIPELINE CORPORATION
7	5	SHELBY JEAN BEAVER
8	5	EDWARD VAUGHN ALEXANDER
9	5,12	CRESCENT RESOURCES, INC.
10	5,12	CORNELIA M. HONEYCUTT
11	5,11	JAMES P. ASHBURN, TRUSTEE
12	5,6	J.T. ALEXANDER, JR.
12A	6	ROBERT MORRISON CALDWELL
13	5	RICHARD W. HOWARD
14	5	RAY N. CALDWELL
15	5	ROBERT MORRISON CALDWELL
16	5,12	WILLIAM DALE CALDWELL
17	5,6	WALTER CLIFTON ELDER
18	6,7	PARRIS K. HASTINGS, JR.
19	7	LOWE'S HOME CENTERS, INC.
21	5,11	RICHARD A. BOYD
22	5,11	LINDA H. CULBRETH
23	11	DOROTHY BULTMAN
24	11	BOBBY R. KARRIKER
25	11	RICHARD A. BOYD
26	11	PINNACLE PROPERTY ASSOCIATION, LLC
27	11	INA HARRIS MARTIN
28	11	FIRST ASSEMBLY OF GOD OF MOORESVILLE
29	11	MAX K. KARRIKER
30	12	COMMUNITY BAPTIST CHURCH
31	12	45' ROADWAY EASEMENT DB 807 PG 259
32	12	KATHARINE D. BLANK
33	12	DENNIS W. BARNETT

PARCEL No.	SHEET No.	PROPERTY OWNER NAME

PROJECT REFERENCE NO.	SHEET NO.
I-4411	4
R/W SHEET NO.	
ROADWAY DESIGN ENGINEER	HYDRAULICS ENGINEER

NORTH CAROLINA PROFESSIONAL SEAL 18903 ENGINEER GREGORY E. BREWER 3-11-05

NORTH CAROLINA PROFESSIONAL SEAL 20329 ENGINEER MAY A. BILLINGS 4/12/05

SEE SHEETS 18 AND 19 FOR PROFILE OF -SRB-

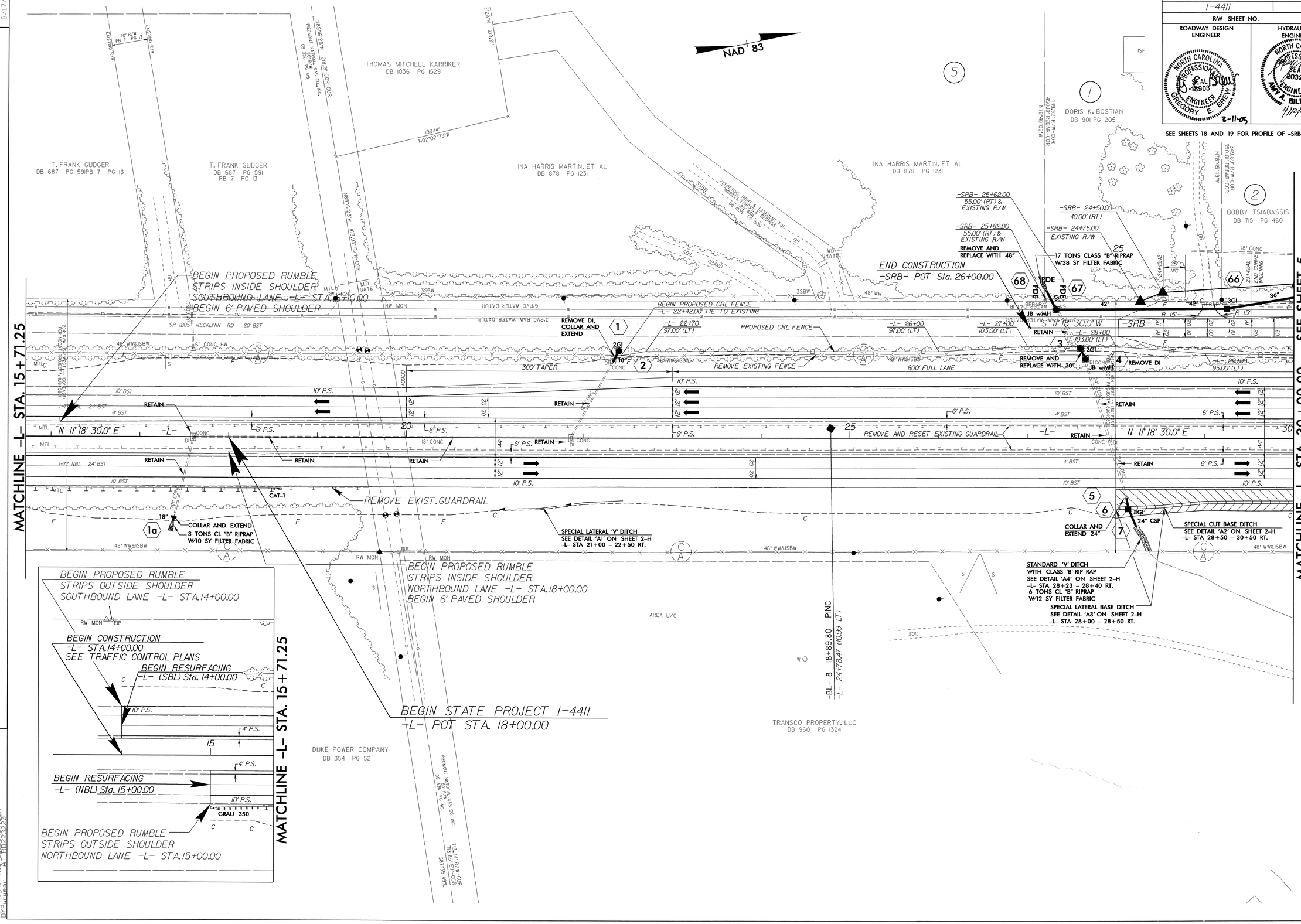

REVISIONS

8/17/99

22-FEB-2005 08:01
R:\Proj\4411_pt4.dgn
DYPLaser AT RD02322201

REVISIONS

PROJECT REFERENCE NO.	SHEET NO.
1-441	5
R/W SHEET NO.	
ROADWAY DESIGN ENGINEER	HYDRAULICS ENGINEER

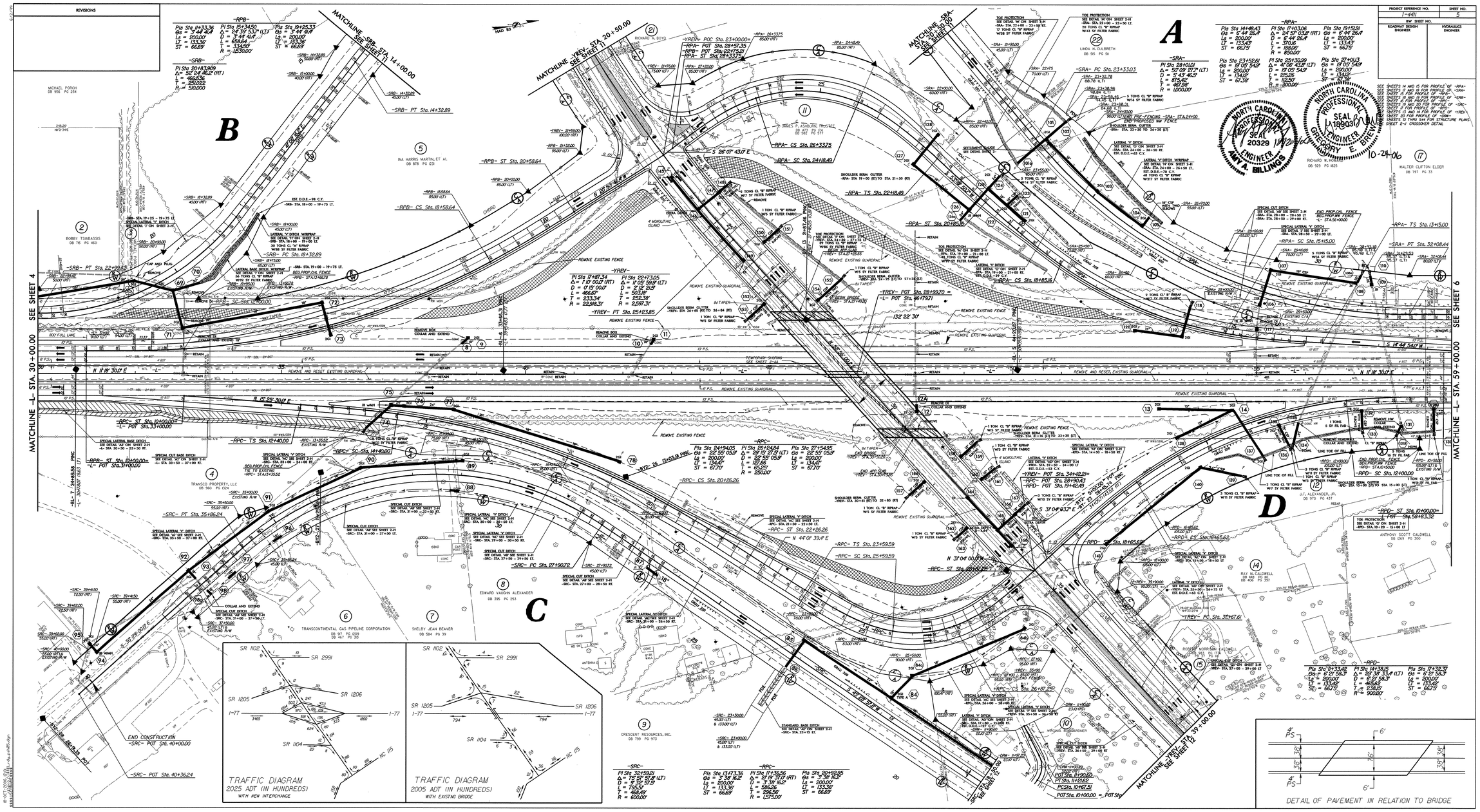

PROJECT REFERENCE NO.	SHEET NO.
I-4411	6
R/W SHEET NO.	
ROADWAY DESIGN ENGINEER	HYDRAULICS ENGINEER

NORTH CAROLINA PROFESSIONAL SEAL 18903 ENGINEER GREGORY E. BREW 3-13-06

NORTH CAROLINA PROFESSIONAL SEAL 20329 ENGINEER AMY A. BILLINGS

SEE SHEETS 17 AND 18 FOR PROFILE OF -SRA-
SEE SHEETS 14 AND 15 FOR PROFILE OF -RPA-

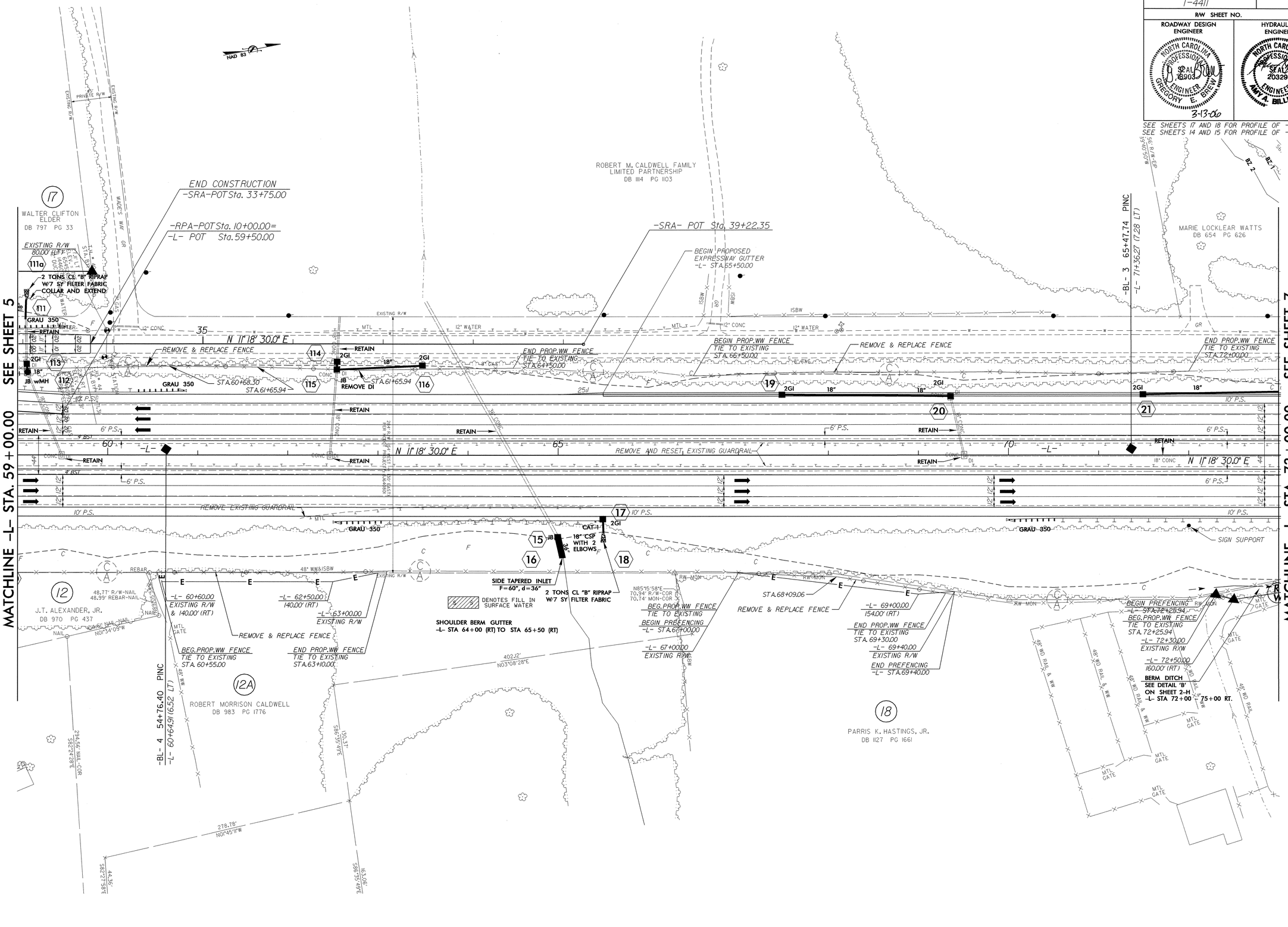

REVISIONS

8/17/99

13-MAR-2006 12:10
r:\proj\14411_rdy_psh06.dgn
$$$$USERNAME$$$$

PROJECT REFERENCE NO.	SHEET NO.
I-4411	7
R/W SHEET NO.	
ROADWAY DESIGN ENGINEER	HYDRAULICS ENGINEER

NORTH CAROLINA PROFESSIONAL SEAL 18903 ENGINEER GREGORY E. BREW — 3-15-05

NORTH CAROLINA PROFESSIONAL SEAL 20328 ENGINEER ANYA BILLINGS — 9/19/05

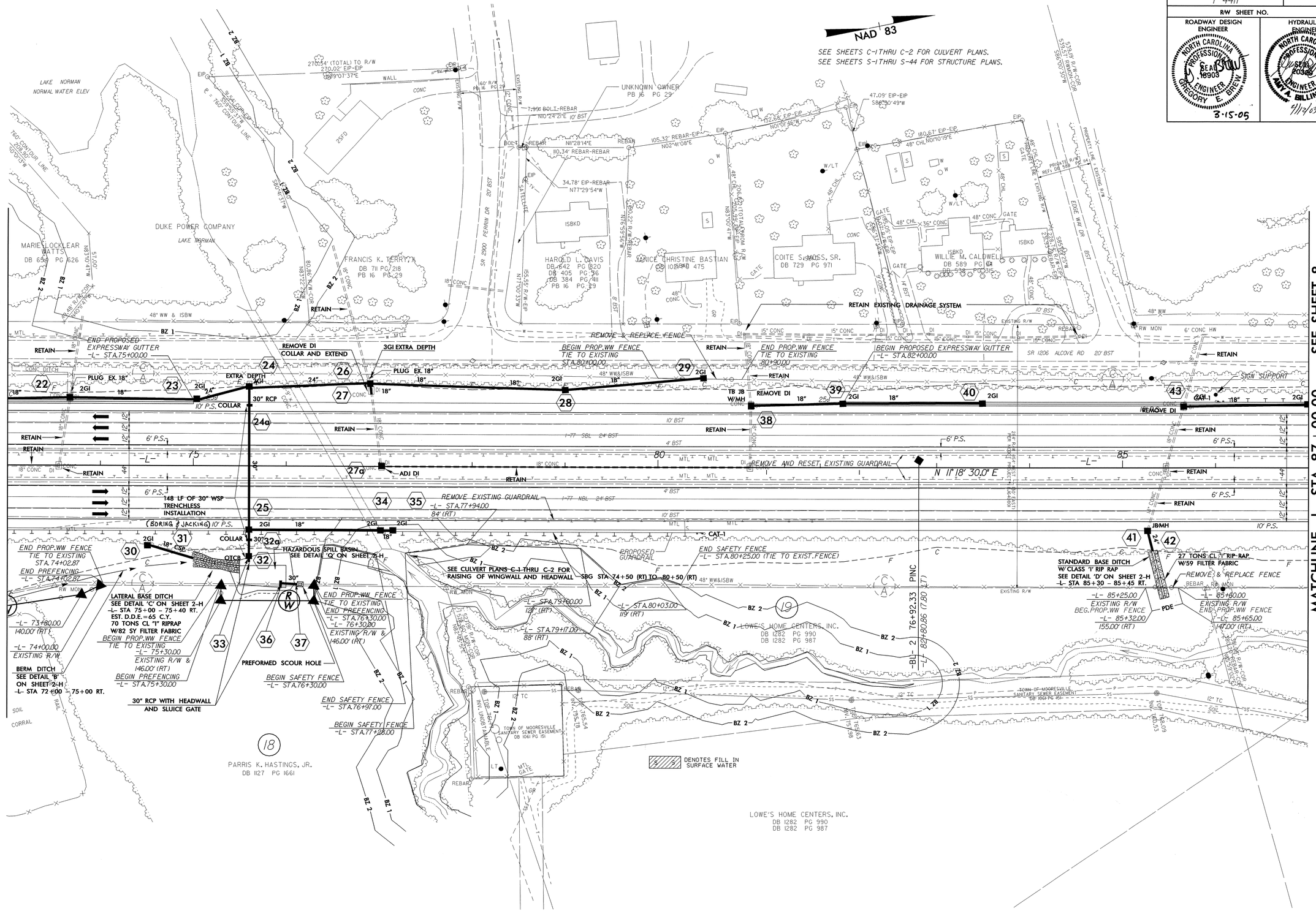

REVISIONS

8/17/99

04-MAR-2005 07:50
R:\Proj\4411_fldsh07.dgn
DIVP\proj\ AT B0223.200

PROJECT REFERENCE NO.	SHEET NO.
I-4411	8
R/W SHEET NO.	
ROADWAY DESIGN ENGINEER	HYDRAULICS ENGINEER

NORTH CAROLINA PROFESSIONAL SEAL 19803 ENGINEER GREGORY E. BREW 3-15-05

NORTH CAROLINA PROFESSIONAL SEAL 20329 ENGINEER ANITA BILLINGS 4/14/05

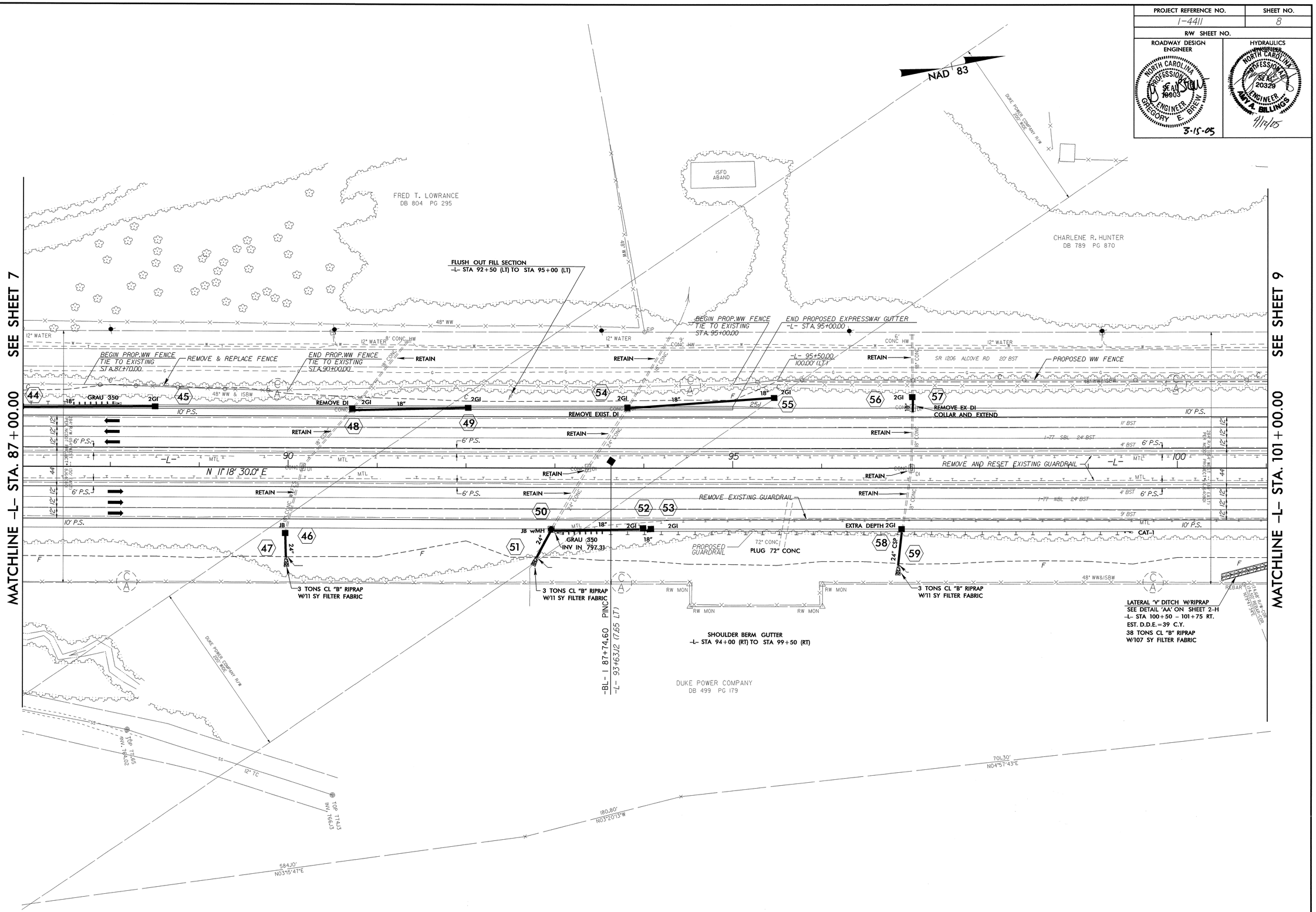

REVISIONS

8/17/99

22-FEB-2005 08:00
R:\Proj\4411_Post08.dgn
ATP_rwear

PROJECT REFERENCE NO.	SHEET NO.
I-4411	9
R/W SHEET NO.	
ROADWAY DESIGN ENGINEER	HYDRAULICS ENGINEER

NORTH CAROLINA PROFESSIONAL SEAL 18896 ENGINEER GREGORY E. BROWN 3-11-05

NORTH CAROLINA PROFESSIONAL SEAL 20329 ENGINEER ALLYA BILLINGS 4/12/05

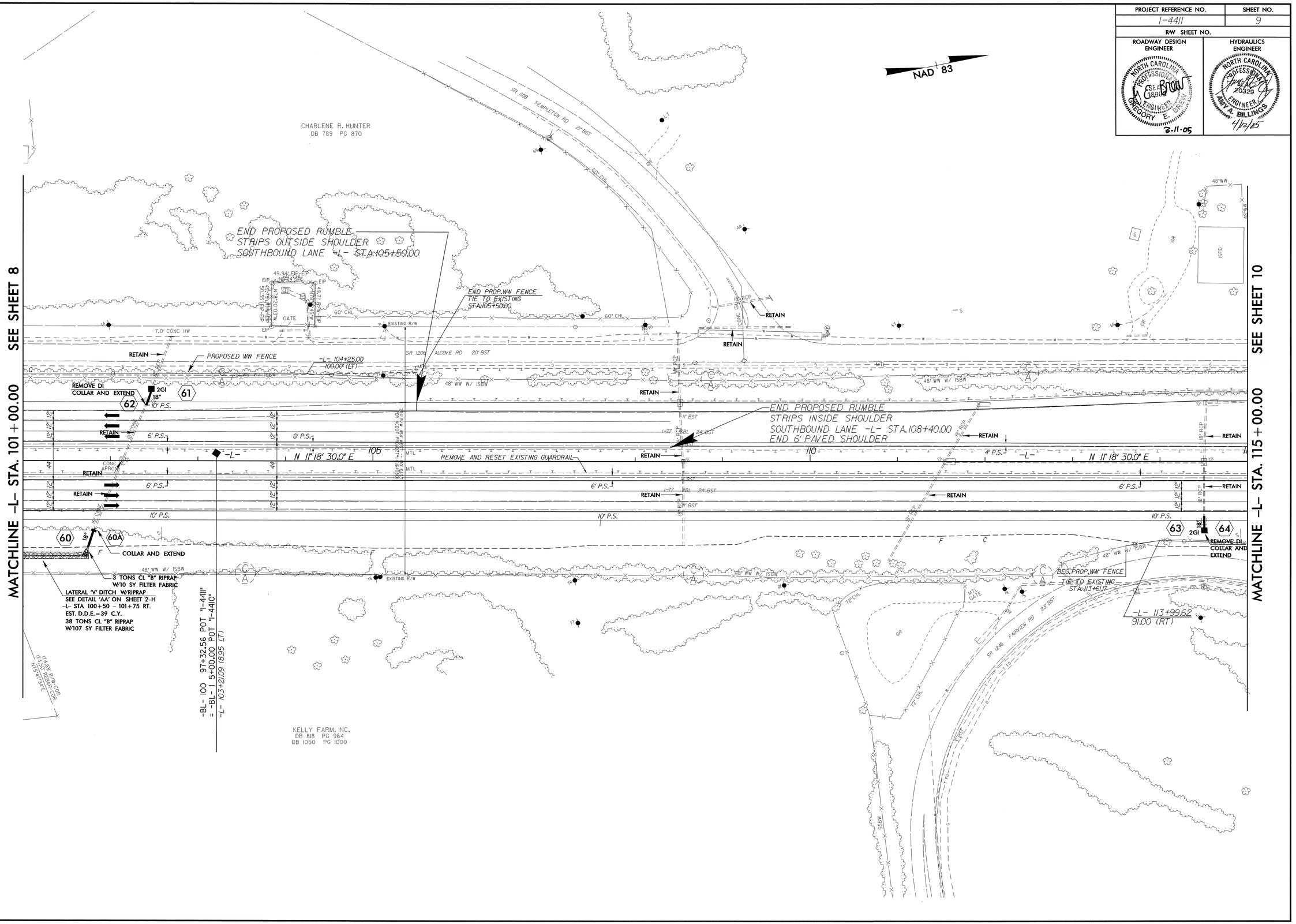

REVISIONS

8/17/99

09-MAR-2005 07:57
R:\Proj\I4411_rdwy_sht09.dgn
Dwilliams AT PB-PP2306

PROJECT REFERENCE NO.	SHEET NO.
I-4411	10
R/W SHEET NO.	
ROADWAY DESIGN ENGINEER	HYDRAULICS ENGINEER

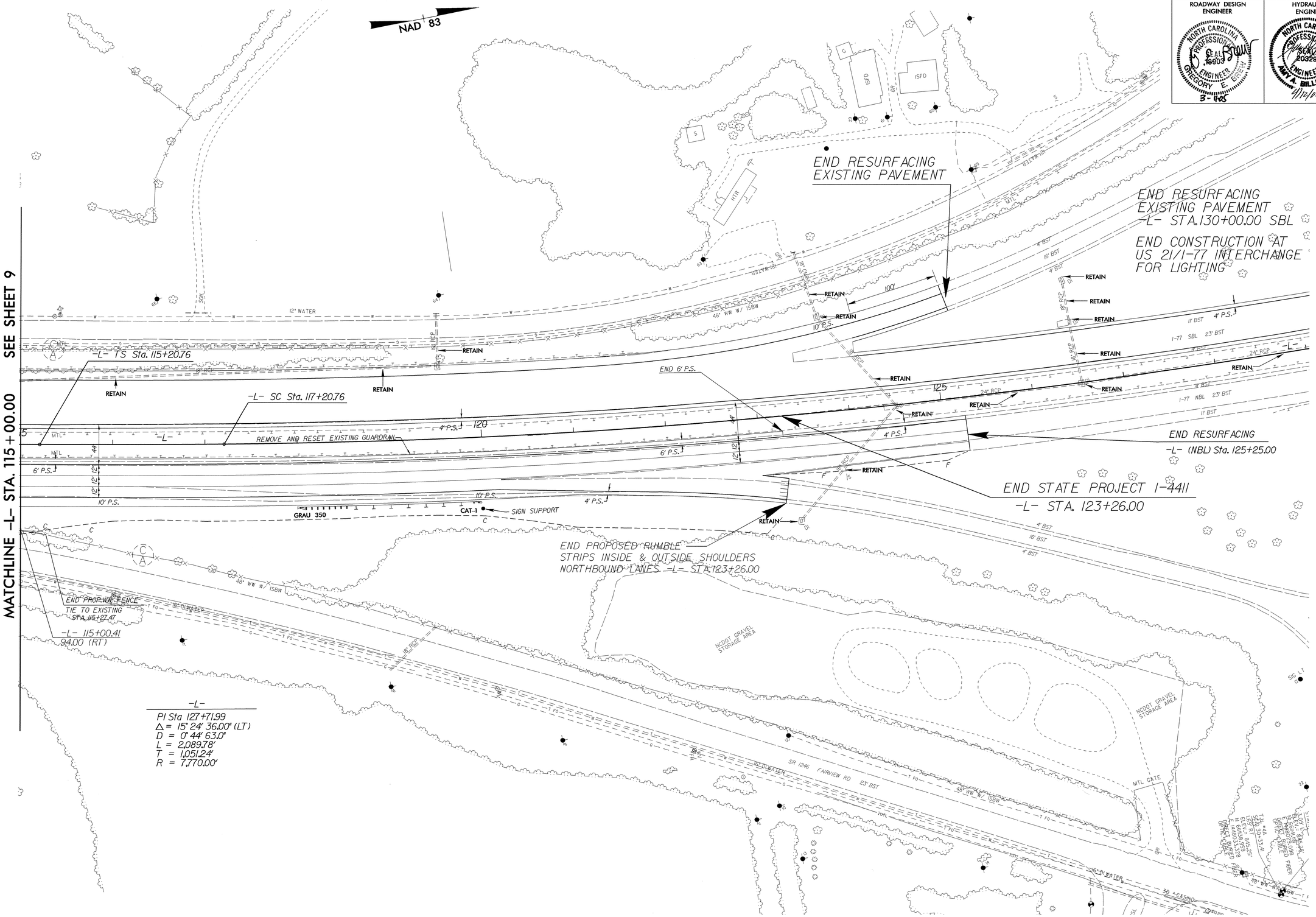

PROJECT REFERENCE NO.	SHEET NO.
I-4411	11
R/W SHEET NO.	
ROADWAY DESIGN ENGINEER	HYDRAULICS ENGINEER

NORTH CAROLINA PROFESSIONAL SEAL 19803 ENGINEER GREGORY E. BREW — 3-11-05

NORTH CAROLINA PROFESSIONAL SEAL 20329 ENGINEER AMY A. BILLINGS — 4/12/05

8/17/99

REVISIONS

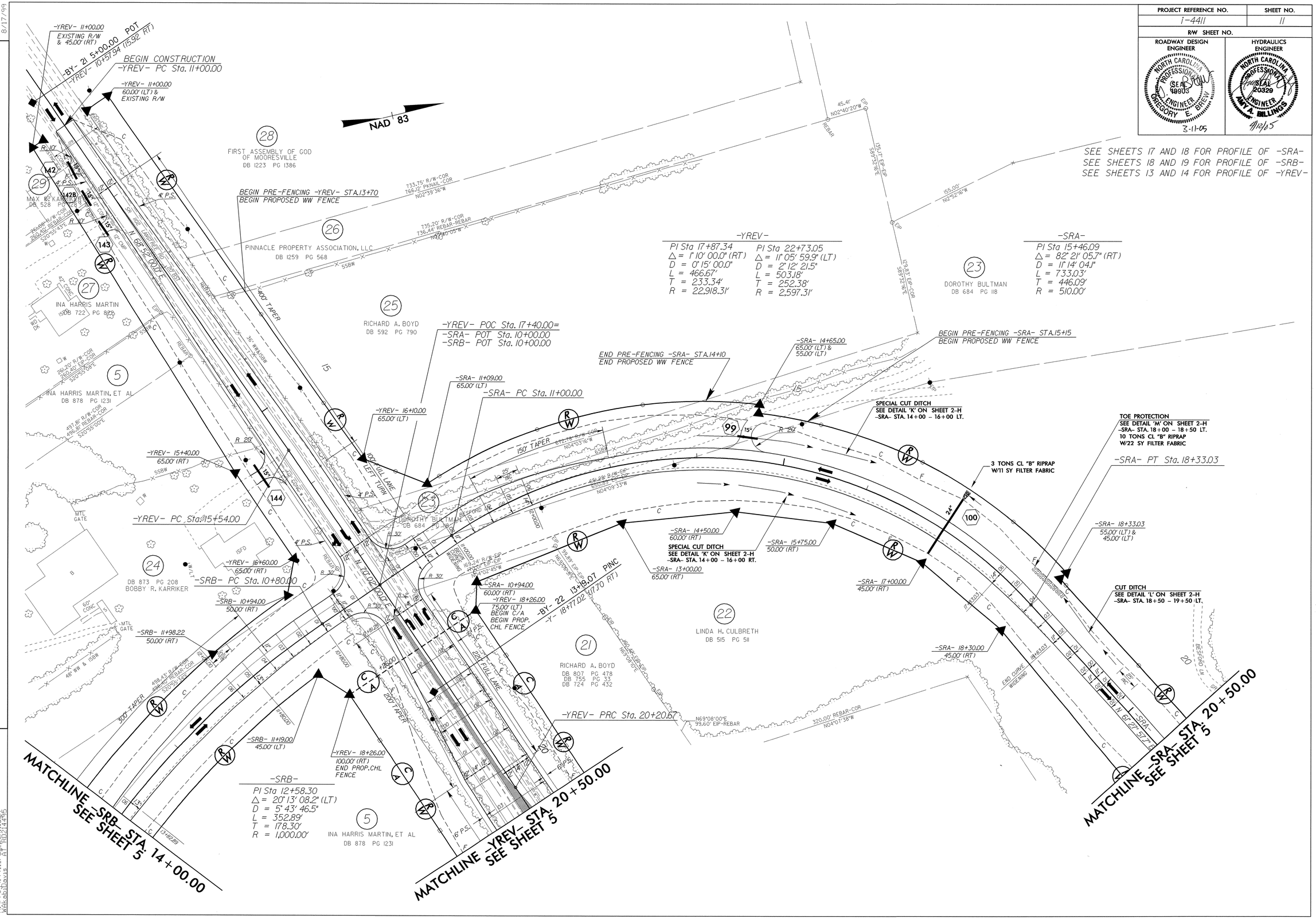

I-WAR-2005 (5:10
K:\Proj\4411-r4 pbhill.dgn
WALCOLDAVIS

PROJECT REFERENCE NO.	SHEET NO.
I-4411	12
R/W SHEET NO.	
ROADWAY DESIGN ENGINEER	HYDRAULICS ENGINEER

NORTH CAROLINA PROFESSIONAL SEAL 019908 ENGINEER GREGORY E. BROWN 3-11-05

NORTH CAROLINA PROFESSIONAL SEAL 20329 ENGINEER AMY A. BILLINGS 11/12/15

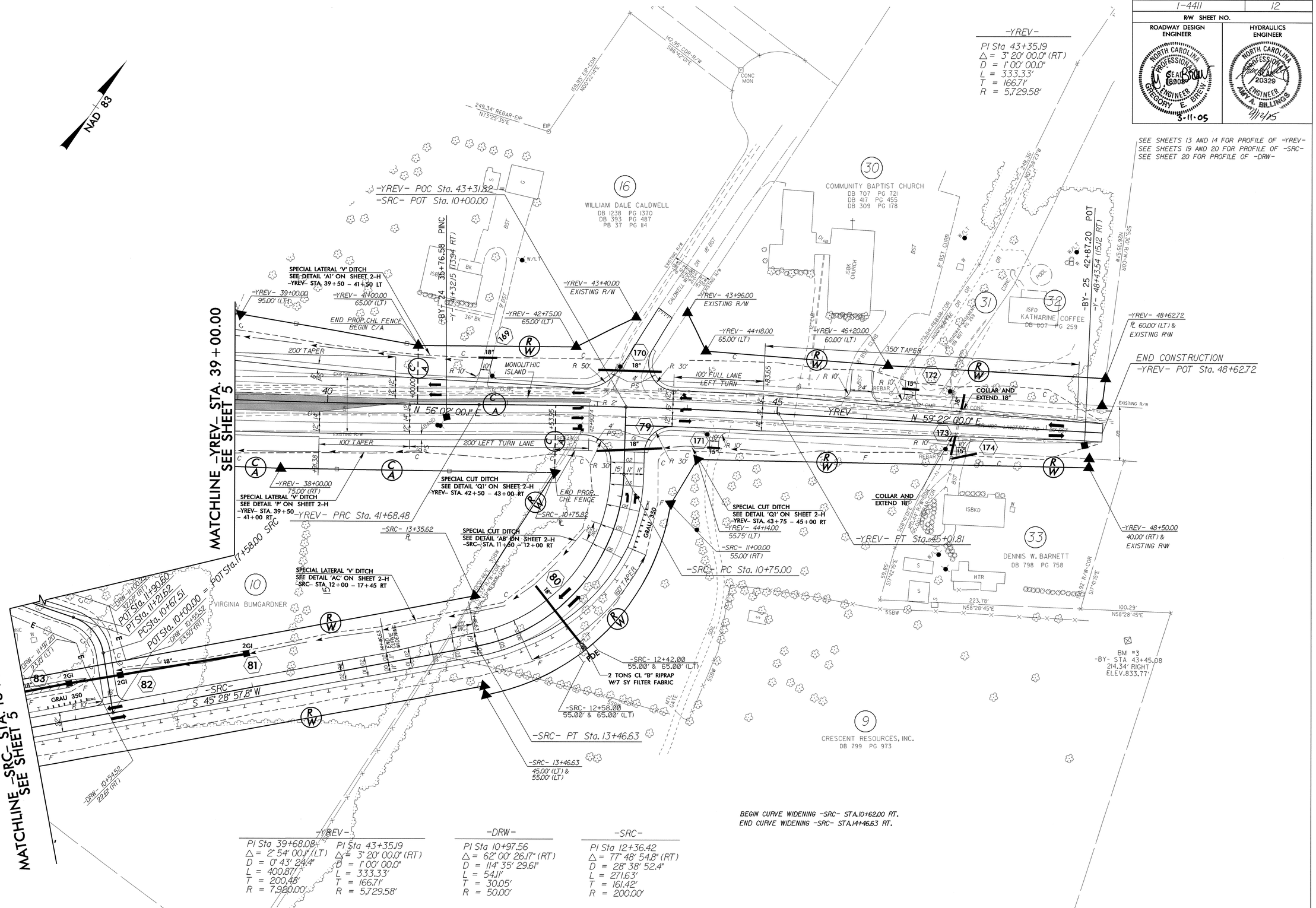

-YREV-	
PI Sta 39+68.08	PI Sta 43+35.19
Δ = 2° 54' 00.1" (LT)	Δ = 3° 20' 00.0" (RT)
D = 0° 43' 24.4"	D = 1° 00' 00.0"
L = 400.87'	L = 333.33'
T = 200.48'	T = 166.71'
R = 7,920.00'	R = 5,729.58'

-DRW-
PI Sta 10+97.56
Δ = 62° 00' 26.17" (RT)
D = 114° 35' 29.61"
L = 54.11'
T = 30.05'
R = 50.00'

-SRC-
PI Sta 12+36.42
Δ = 77° 48' 54.8" (RT)
D = 28° 38' 52.4"
L = 271.63'
T = 161.42'
R = 200.00'

REVISIONS

8/17/99

22-FEB-2005 08:00
R:\Proj\2411_sh12.dgn
DYPruger AT R0223220

PROJECT REFERENCE NO.	SHEET NO.
I-4411	13

ROADWAY DESIGN ENGINEER

NORTH CAROLINA PROFESSIONAL SEAL 18903 ENGINEER GREGORY E. BREW

3-11-05

HYDRAULICS ENGINEER

NORTH CAROLINA PROFESSIONAL SEAL 20329 ENGINEER AMY A. BILLINGS

4/12/05

SEE SHEETS 5,11 AND 12 FOR PLAN OF -YREV-

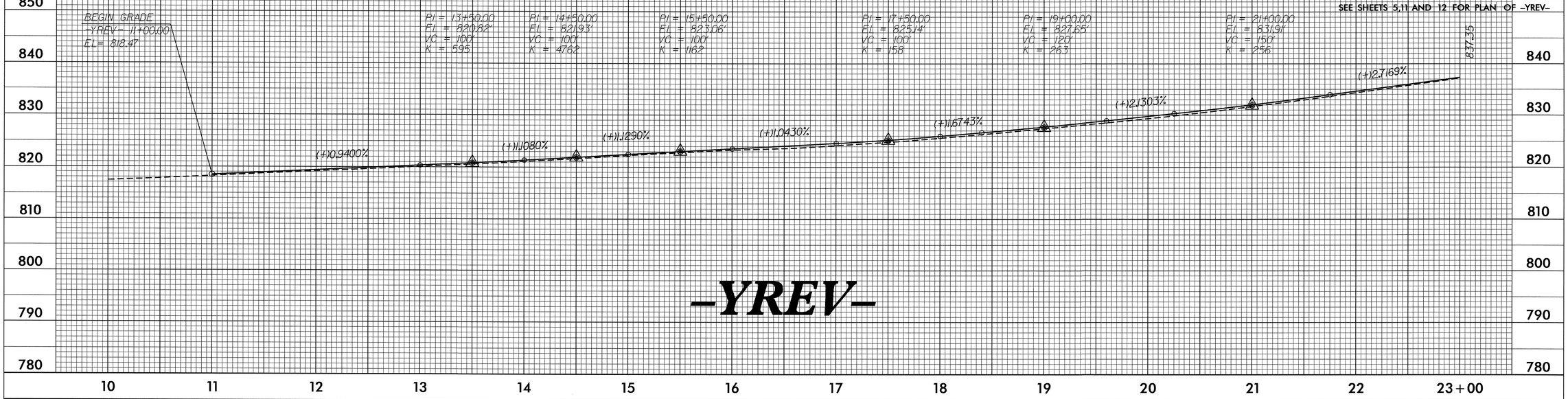

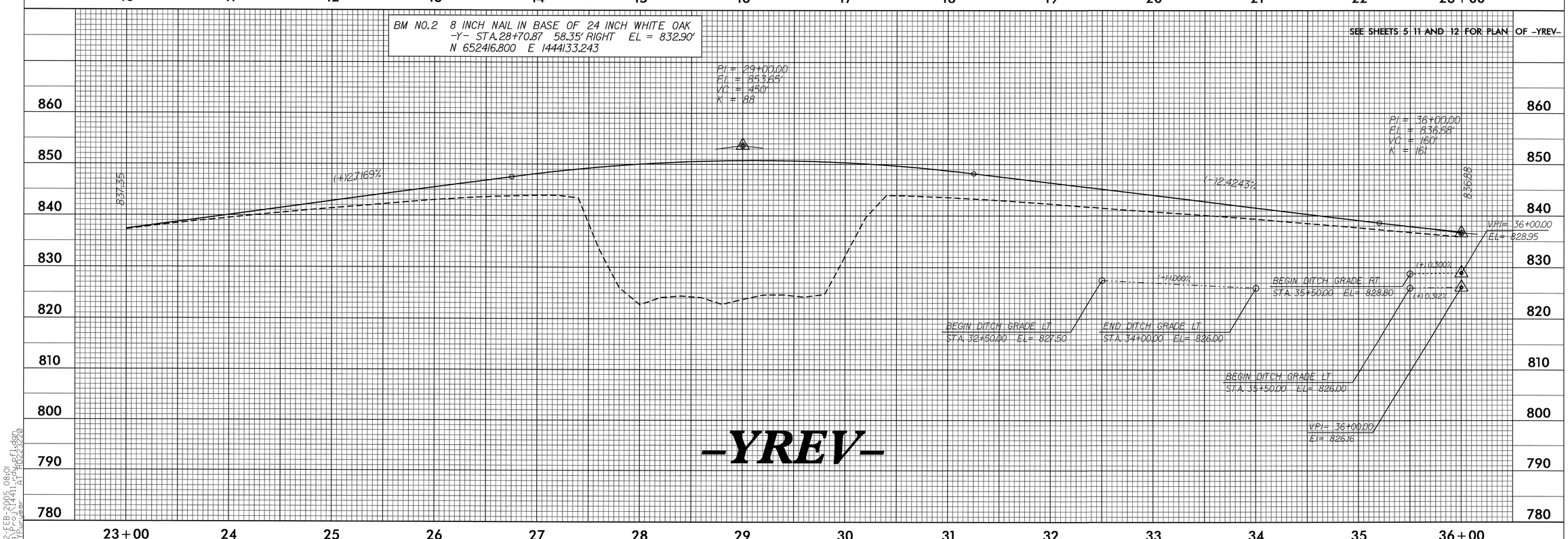

5/28/99

22-FEB-2005 08:01
R:\Proj\1441_rdy_pfl.dgn
DYPuryear AT RD223220

5/28/99

BM#3 - 8 INCH NAIL IN BASE OF 24 INCH RED OAK EL.8323.77'
-Y- STA.43+45.08 214.34' RIGHT
N 654055.204 E 1447774.516

PROJECT REFERENCE NO.	SHEET NO.
I-4411	14

ROADWAY DESIGN ENGINEER: NORTH CAROLINA PROFESSIONAL SEAL 18903 ENGINEER GREGORY E. BREW 3-11-05

HYDRAULICS ENGINEER: NORTH CAROLINA PROFESSIONAL SEAL 20329 ENGINEER AMY A. BILLINGS 4/12/05

SEE SHEETS 5,11 AND 12 FOR PLAN OF -YREV-

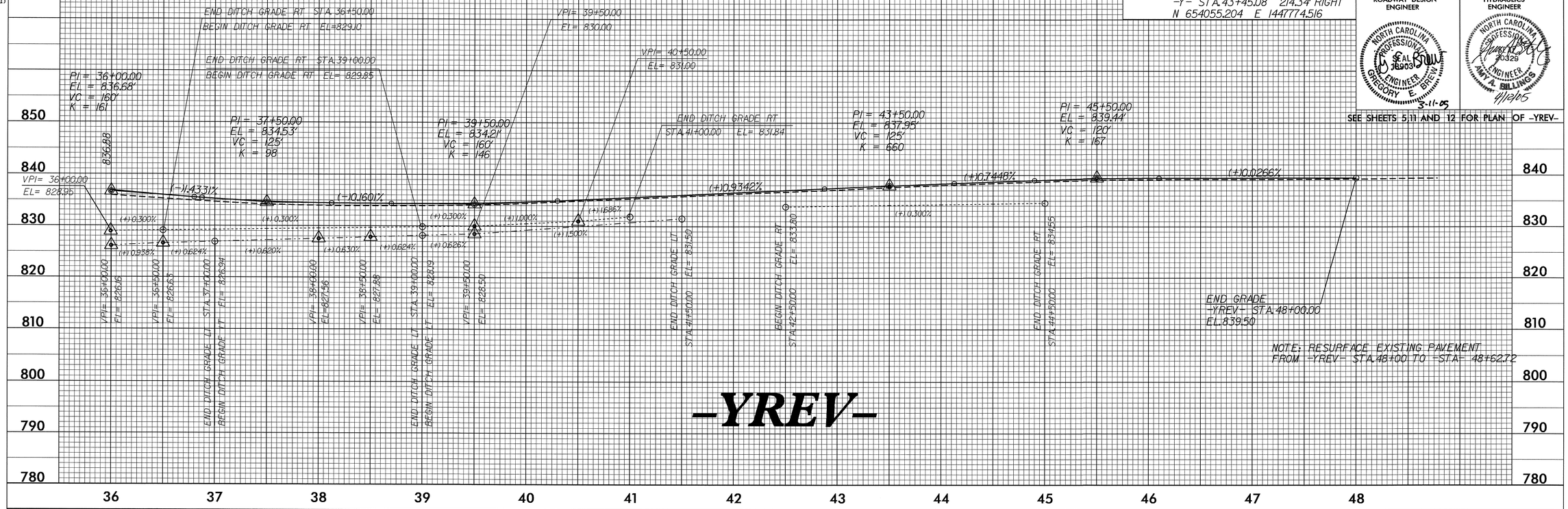

SEE SHEETS 5 AND 6 FOR PLAN OF -RPA-

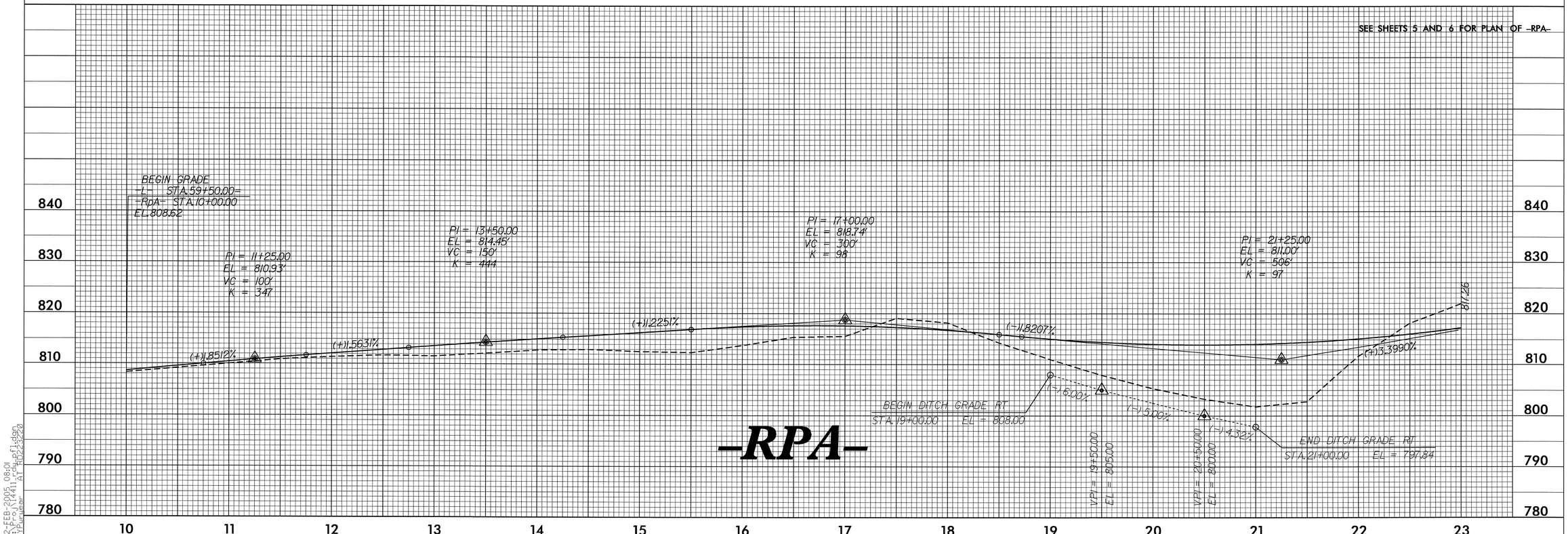

22-FEB-2005 08:01
R:\Proj\14411_rdy_pfl.dgn
DYPuryear AT RD223220

PROJECT REFERENCE NO.	SHEET NO.
I-4411	15

ROADWAY DESIGN ENGINEER

NORTH CAROLINA PROFESSIONAL SEAL 18908 ENGINEER GREGORY E. BREW

3-15-05

HYDRAULICS ENGINEER

NORTH CAROLINA PROFESSIONAL SEAL 20329 ENGINEER AMY A. BILLINGS

4/12/05

SEE SHEETS 5 AND 6 FOR PLAN OF -RPA-

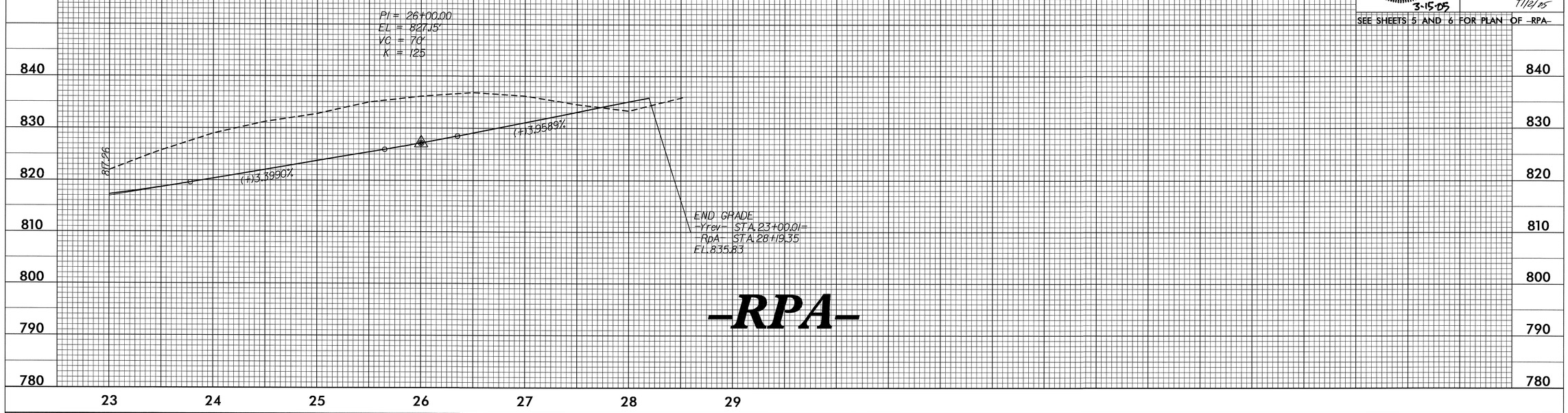

SEE SHEET 5 FOR PLAN OF -RPB-

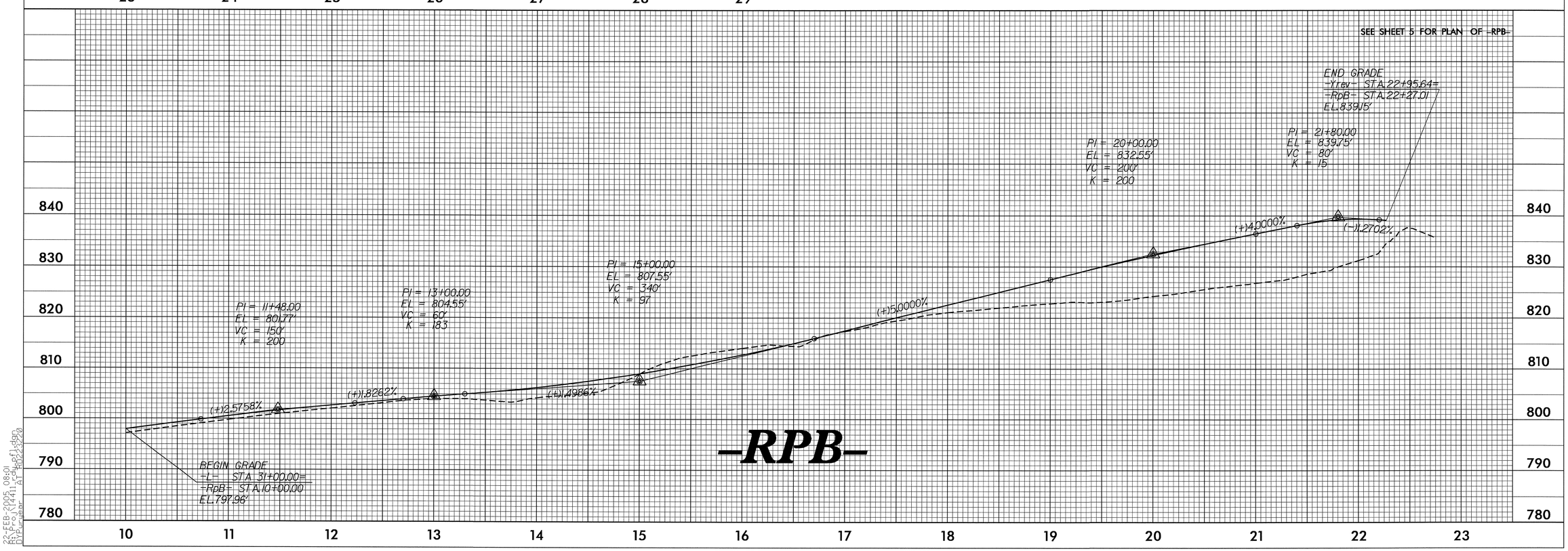

5/28/99

22-FEB-2005 08:01
R:\Proj\14411_rdy_pfl.dgn
DYPurvear AT RD223220

PROJECT REFERENCE NO.	SHEET NO.
I-4411	16

ROADWAY DESIGN ENGINEER

NORTH CAROLINA PROFESSIONAL ENGINEER SEAL 18903 GREGORY E. BREW

3-11-05

HYDRAULICS ENGINEER

NORTH CAROLINA PROFESSIONAL ENGINEER SEAL 20329 AMY A. BILLINGS

4/12/05

SEE SHEET 5 FOR PLAN OF -RPC-

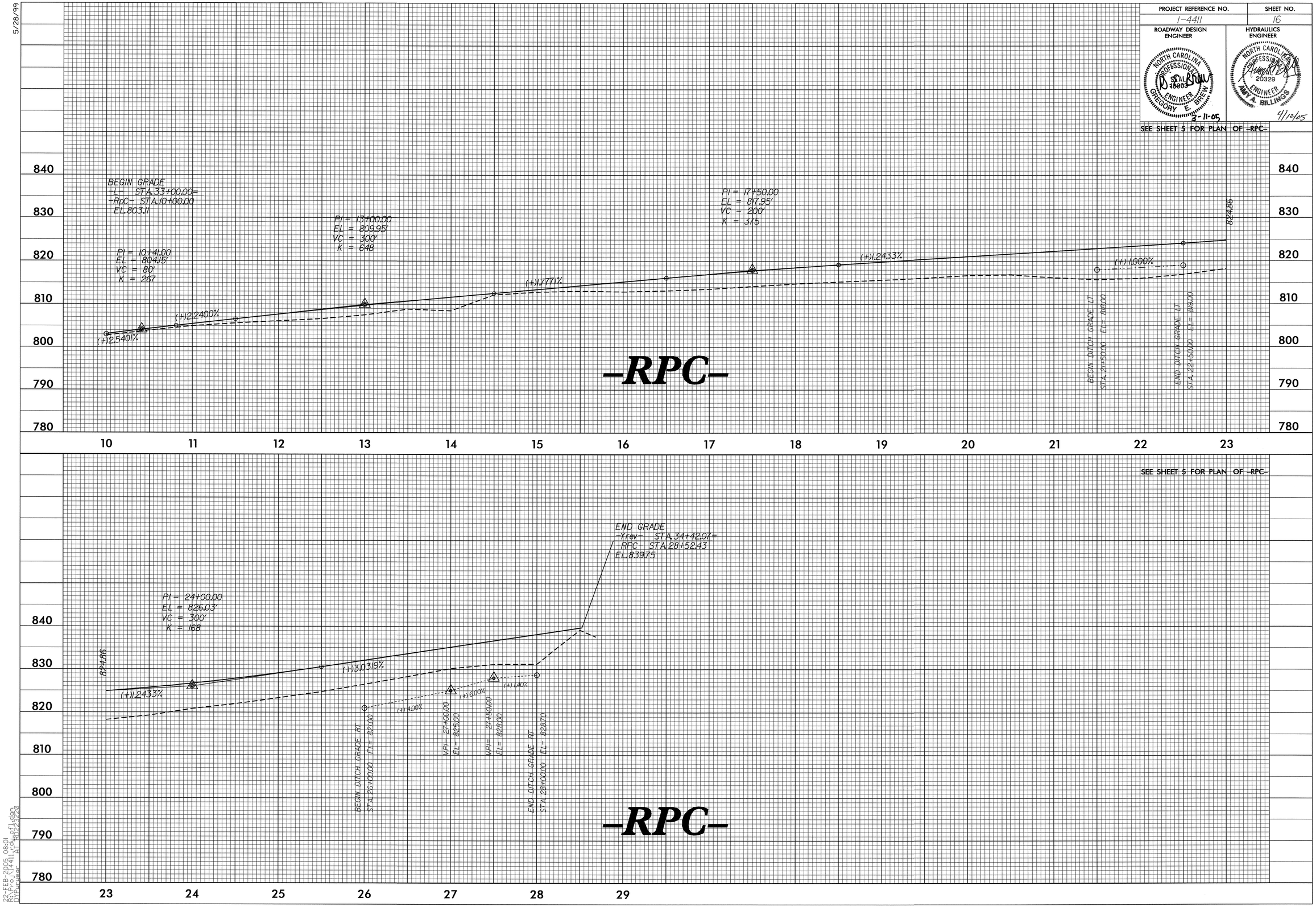

SEE SHEET 5 FOR PLAN OF -RPC-

5/28/99

22-FEB-2005 08:01
R:\Proj\14411_rdy_pf1.dgn
DYPuryear AT RD223220

5/28/99

PROJECT REFERENCE NO.	SHEET NO.
I-4411	17
ROADWAY DESIGN ENGINEER	HYDRAULICS ENGINEER

NORTH CAROLINA PROFESSIONAL SEAL 18908 ENGINEER GREGORY E. BRENT 3-11-05

NORTH CAROLINA PROFESSIONAL SEAL 20329 ENGINEER MATT A. BILLINGS 4/11/2005

SEE SHEET 5 AND 6 FOR PLAN OF -RPD-

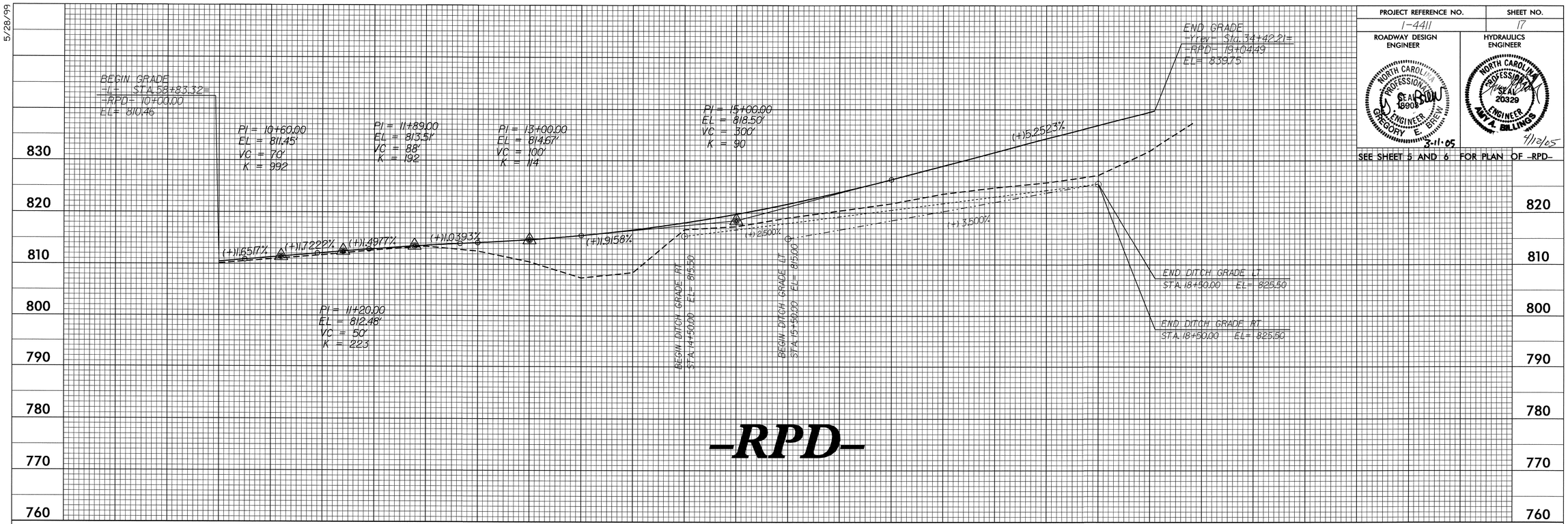

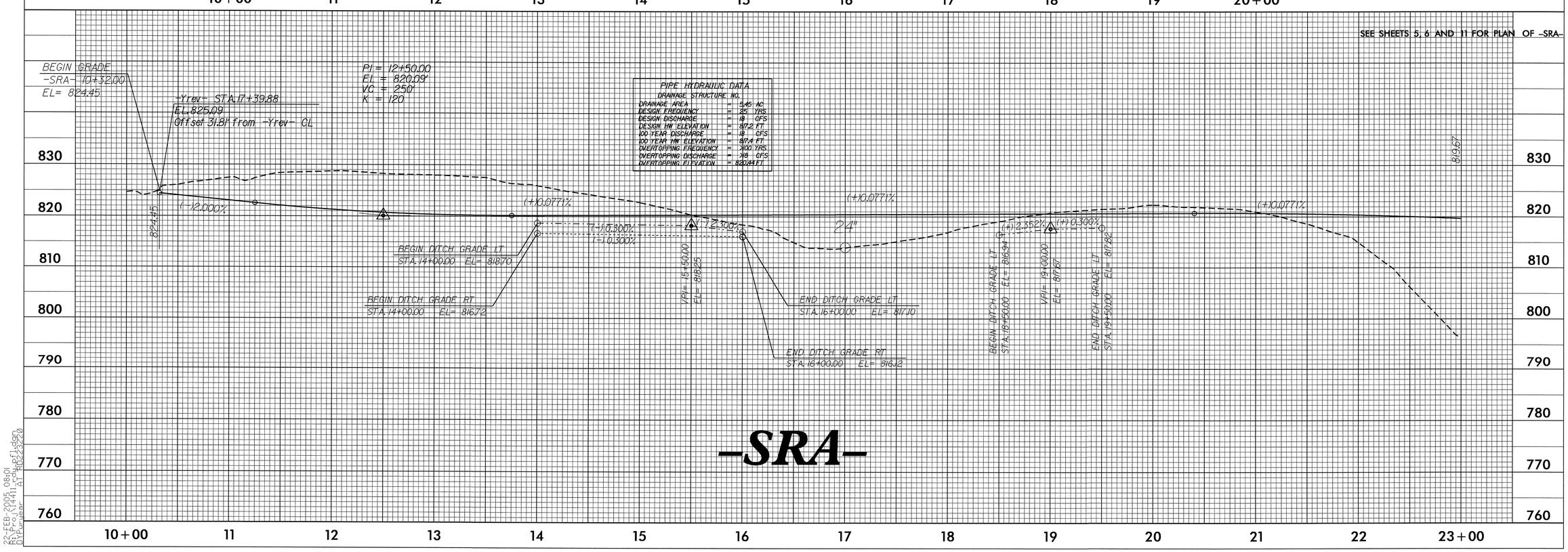

22-FEB-2005 08:01
R:\Proj\I4411_cdu_rfl.dgn
by Pauleer AT R0223220

5/28/99

PROJECT REFERENCE NO.	SHEET NO.
I-4411	18

ROADWAY DESIGN ENGINEER

NORTH CAROLINA PROFESSIONAL SEAL 18003 ENGINEER GREGORY E. BRENT

3-11-05

HYDRAULICS ENGINEER

NORTH CAROLINA PROFESSIONAL SEAL 20329 ENGINEER AMY L. SHILLINGS

4/13/05

SEE SHEETS 5, 6 AND 11 FOR PLAN OF -SRA-

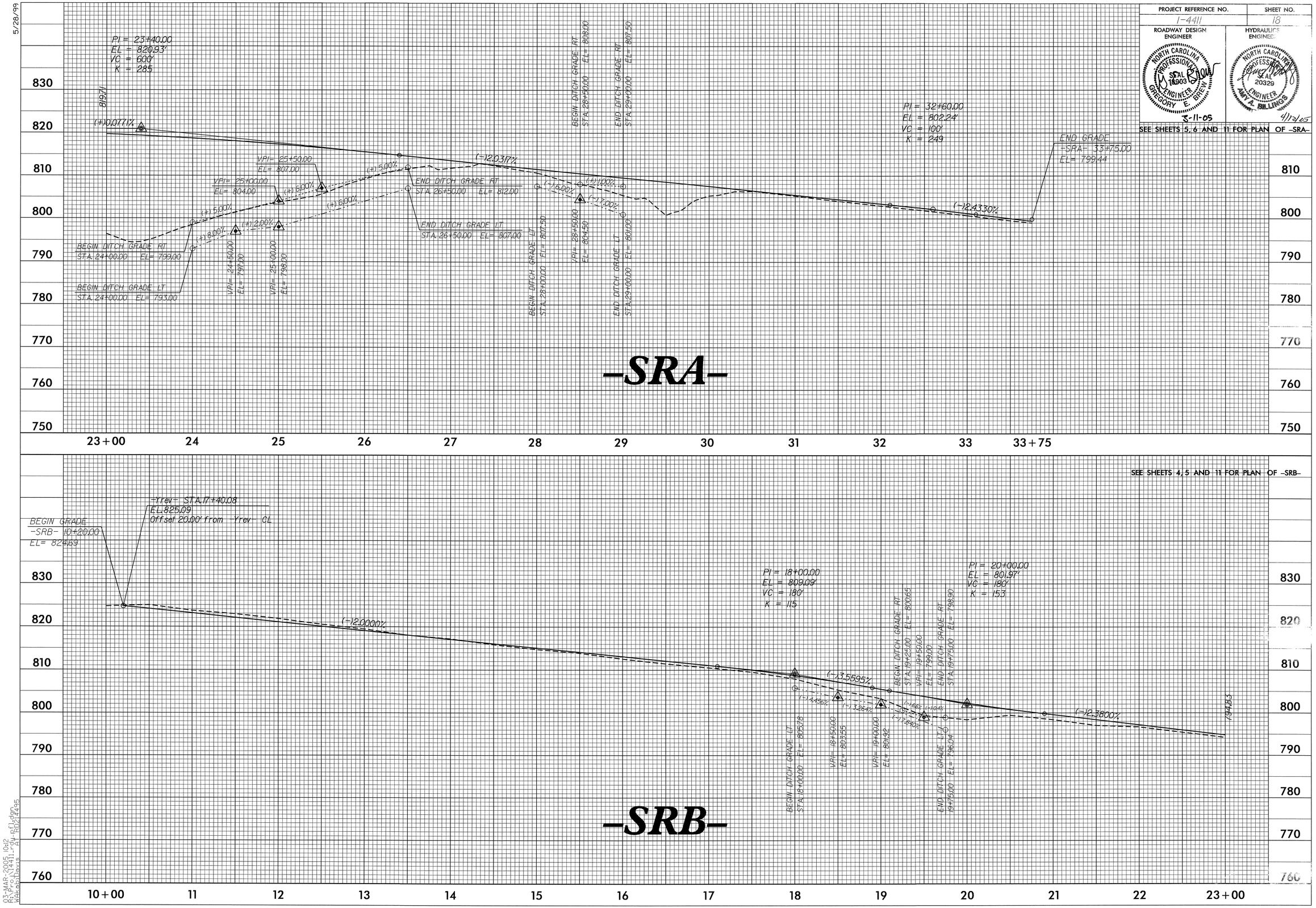

03-MAR-2005 10:2
R:\4411_rg01.dgn
Walk Rhodes

PROJECT REFERENCE NO.	SHEET NO.
I-4411	19

ROADWAY DESIGN ENGINEER: NORTH CAROLINA PROFESSIONAL SEAL 18903 ENGINEER GREGORY E. BREW 5-11-05

HYDRAULICS ENGINEER: NORTH CAROLINA PROFESSIONAL SEAL 20329 ENGINEER AMY A. BILLINGS 4/12/05

SEE SHEETS 4, 5 AND 11 FOR PLAN OF -SRB-

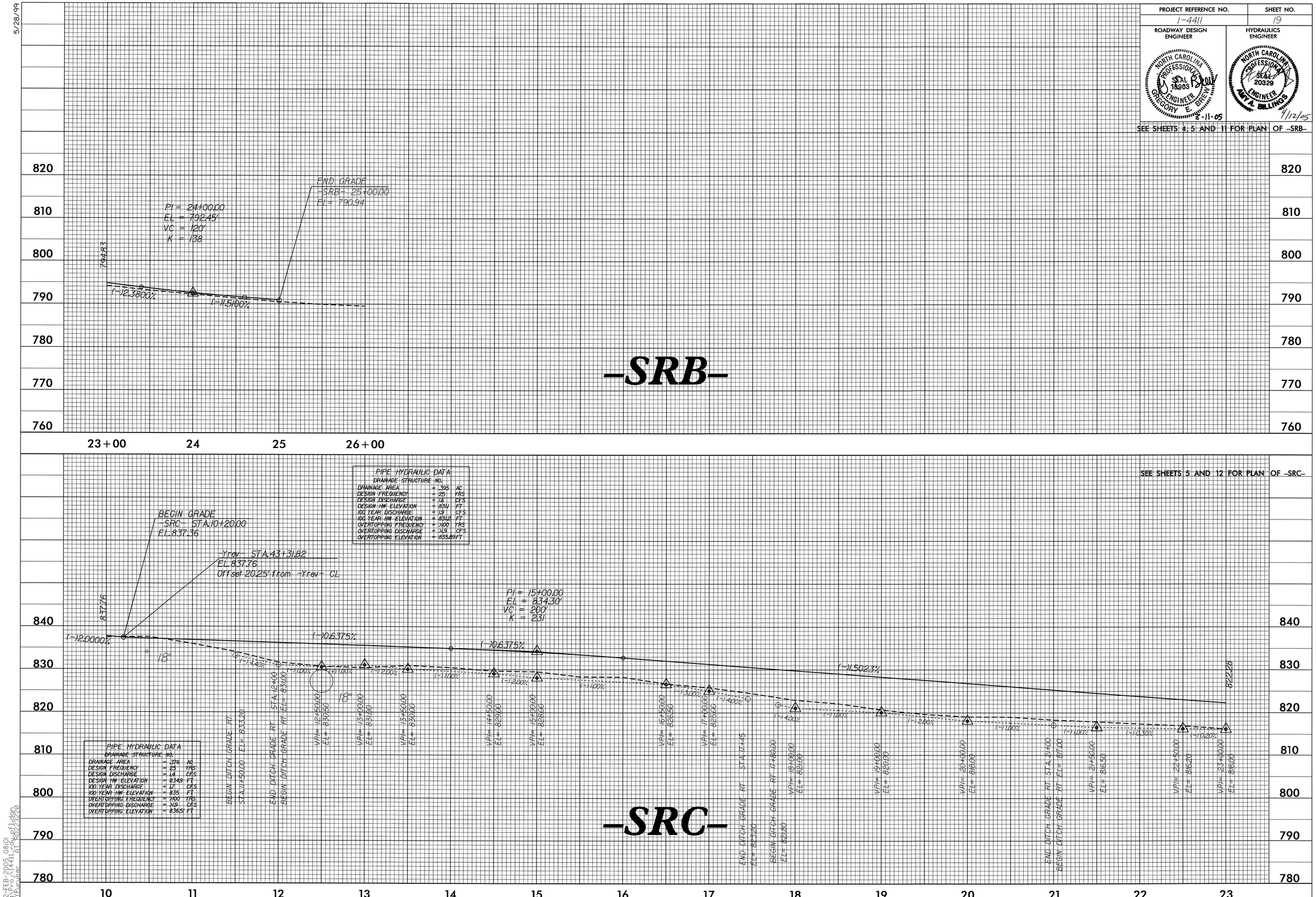

SEE SHEETS 5 AND 12 FOR PLAN OF -SRC-

5/28/99

22-FEB-2005 08:01
R:\Proj\14411_rdy_pfl.dgn
DYPuryear AT RD223220

5/28/99

PROJECT REFERENCE NO.	SHEET NO.
I-4411	20

ROADWAY DESIGN ENGINEER

NORTH CAROLINA PROFESSIONAL SEAL 19903 ENGINEER GREGORY E. BREW

3-22-06

HYDRAULICS ENGINEER

NORTH CAROLINA PROFESSIONAL SEAL 20329 ENGINEER MYA A. BILLINGS

4/12/05

SEE SHEETS 5 AND 12 FOR PLAN OF -SRC-

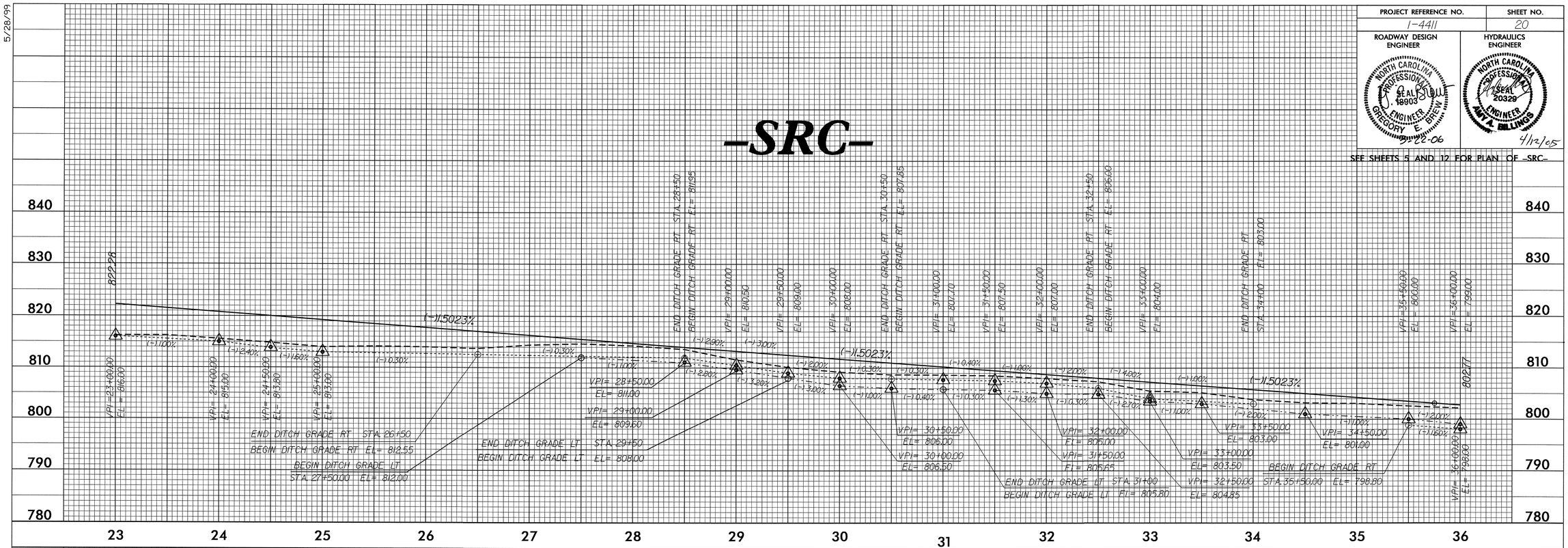

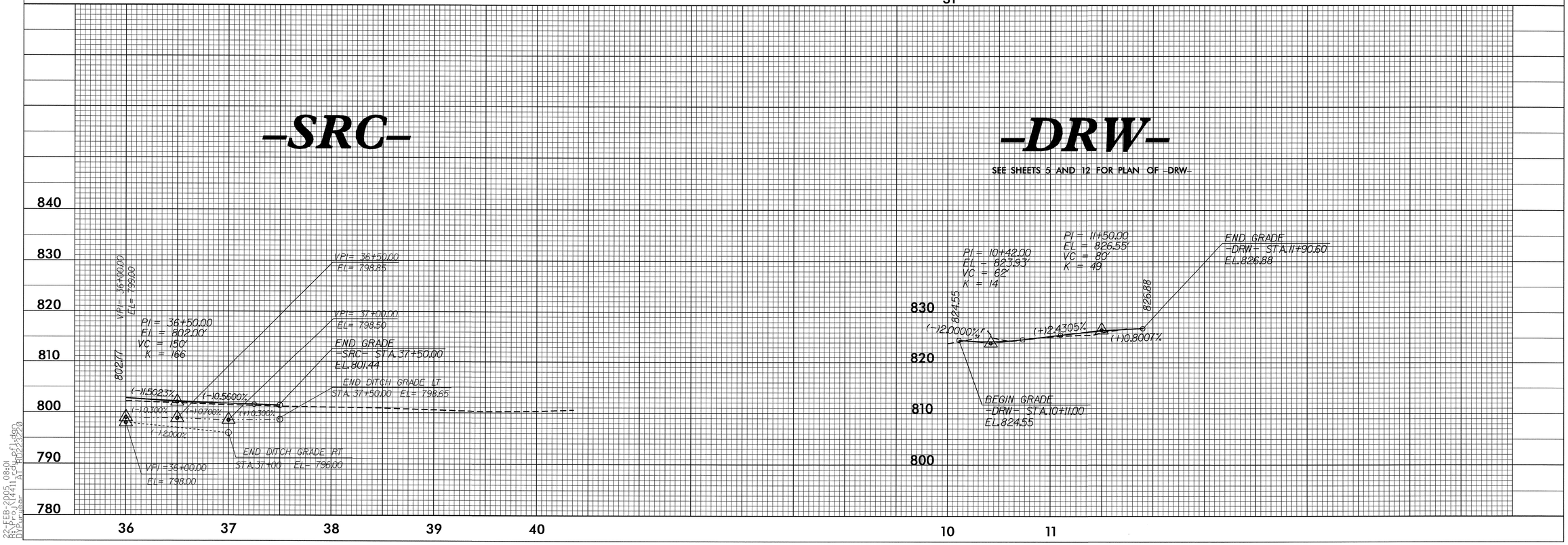

22-FEB-2005 08:01
R:\Proj\I4411_rdy_pfl.dgn
DYPurnell AT 50223220