TIP NO.	SHEET NO.
U-2408	SIGN 1

METRIC

STATE OF NORTH CAROLINA
DEPARTMENT OF TRANSPORTATION

SIGNING PLANS
GASTON COUNTY

LOCATION: NC 274 (BESSEMER CITY ROAD) FROM NC 275 (DALLAS–BESSEMER CITY ROAD) TO US 29–74 (FRANKLIN BOULEVARD)

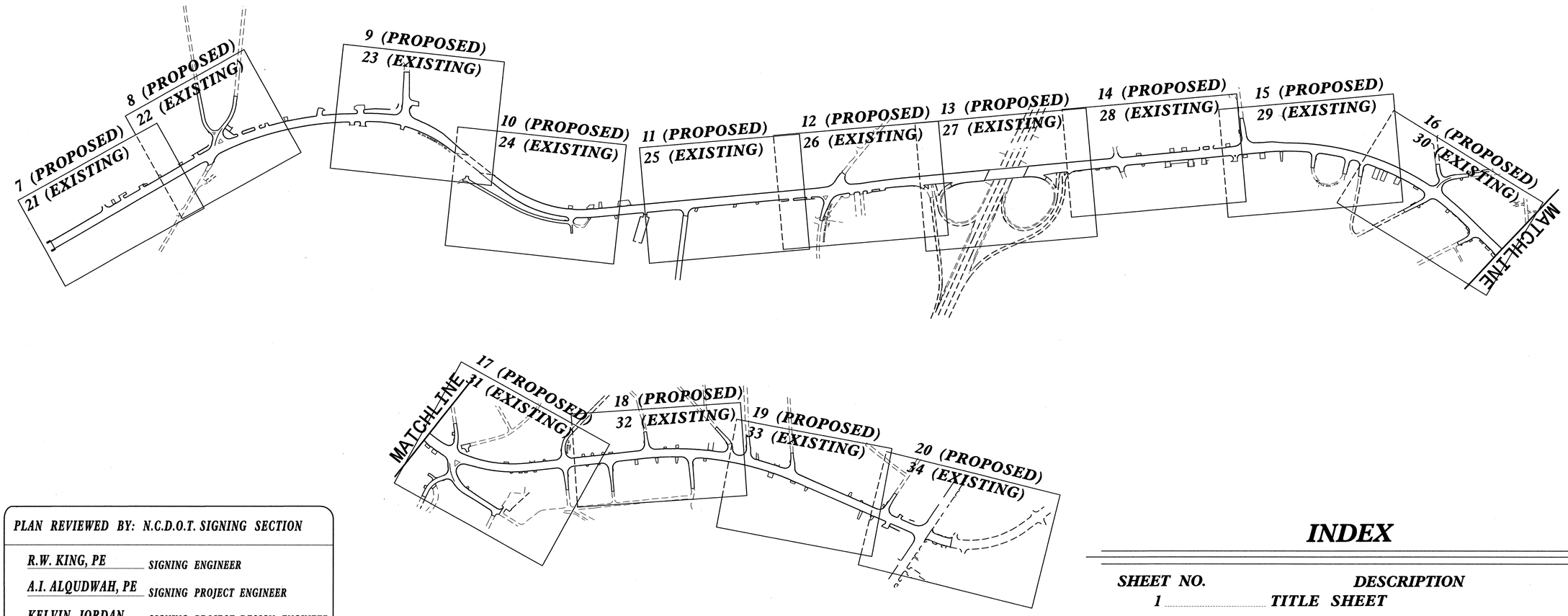

TIP: U-2408

CONTRACT NO.: C201595

PLAN REVIEWED BY: N.C.D.O.T. SIGNING SECTION

R.W. KING, PE	SIGNING ENGINEER
A.I. ALQUDWAH, PE	SIGNING PROJECT ENGINEER
KELVIN JORDAN	SIGNING PROJECT DESIGN ENGINEER
ROSA TUNG	SIGNING DESIGN ENGINEER

PLAN PREPARED BY:

SEPI ENGINEERING GROUP
2300 Rexwoods Drive
Suite 370
Raleigh, NC 27607
Tel:919-789-9977 Fax:789-9591

SEAL

NORTH CAROLINA PROFESSIONAL SEAL 20104 ENGINEER SEPIDEH S. ASEFNIA
Sepideh Asefnia
8-10-04

PLANS REVIEWED BY: SEPIDEH ASEFNIA, PE
PLANS DESIGNED BY: RICHARD DAYTON
PLANS PREPARED BY: CHARLES KINCAID

INDEX

SHEET NO.	DESCRIPTION
1	TITLE SHEET
2	SUMMARY OF QUANTITIES and applicable ROADWAY STANDARD DRAWINGS
3	NOTES
4 – 5	E SHEETS
6	F SHEETS
7 – 20	PROPOSED SIGN ROADWAY SHEETS
21 – 34	EXISTING SIGN ROADWAY SHEETS

TIP NO.	SHEET NO.
U-2408	SIGN 2

SIGNS
SUMMARY OF QUANTITIES

ITEM NO. DESC. NO.	ITEM NO. SECT. NO.	ITEM DESCRIPTION	QUANTITY	UNIT
0001000000	800	MOBILIZATION		L.S.
4025000000	901	CONTRACTOR FURNISHED, TYPE A SIGN		S.M.
4025000000	901	CONTRACTOR FURNISHED, TYPE B SIGN		S.M.
4025000000	901	CONTRACTOR FURNISHED, TYPE D SIGN		S.M.
4025000000	901	CONTRACTOR FURNISHED, TYPE E SIGN		S.M.
4025000000	901	CONTRACTOR FURNISHED, TYPE F SIGN		S.M.
4025000000	901	CONTRACTOR FURNISHED, OVERLAYS SIGN		S.M.
4025000000	901	CONTRACTOR FURNISHED, MILEMARKER SIGN		S.M.
4048000000	902	REINFORCED CONCRETE SIGN FOOTINGS		C.M.
4054000000	902	PLAIN CONCRETE SIGN FOOTINGS		C.M.
4060000000	903	SUPPORTS, BREAKAWAY STEEL BEAM		KG.
4066000000	903	SUPPORTS, SIMPLE STEEL BEAM		KG.
4072000000	903	SUPPORTS, 4.5-KG STEEL U-CHANNEL	959	L.M.
4078000000	903	SUPPORTS, 3.0-KG STEEL U-CHANNEL		EA.
4079000000	903	SUPPORTS, BARRIER (SMALL)		EA.
4080000000	903	SUPPORTS, BARRIER (LARGE)		EA.
4081000000	903	SUPPORTS, OVERHEAD STRUCTURE " "		L.S.
4081000000	903	SUPPORTS, OVERHEAD STRUCTURE " "		L.S.
4081000000	903	SUPPORTS, OVERHEAD STRUCTURE " "		L.S.
4081000000	903	SUPPORTS, OVERHEAD STRUCTURE " "		L.S.
4081000000	903	SUPPORTS, OVERHEAD STRUCTURE " "		L.S.
4081000000	903	SUPPORTS, OVERHEAD STRUCTURE " "		L.S.
4081000000	903	SUPPORTS, OVERHEAD STRUCTURE " "		L.S.
4081000000	903	SUPPORTS, OVERHEAD STRUCTURE " "		L.S.
4081000000	903	SUPPORTS, OVERHEAD STRUCTURE " "		L.S.
4081000000	903	SUPPORTS, OVERHEAD STRUCTURE " "		L.S.
4081000000	903	SUPPORTS, OVERHEAD STRUCTURE " "		L.S.
4081000000	903	SUPPORTS, OVERHEAD STRUCTURE " "		L.S.
4081000000	903	SUPPORTS, OVERHEAD STRUCTURE " "		L.S.
4081000000	903	SUPPORTS, OVERHEAD STRUCTURE " "		L.S.
4081000000	903	SUPPORTS, OVERHEAD STRUCTURE " "		L.S.
4081000000	903	SUPPORTS, OVERHEAD STRUCTURE " "		L.S.
4081000000	903	SUPPORTS, OVERHEAD STRUCTURE " "		L.S.
4081000000	903	SUPPORTS, OVERHEAD STRUCTURE " "		L.S.
4081000000	903	SUPPORTS, OVERHEAD STRUCTURE " "		L.S.
4082000000	903	SUPPORTS, WOOD		L.M.
4109000000	904	SIGN ERECTION, TYPE A (OVERHEAD)		EA.
4109000000	904	SIGN ERECTION, TYPE B (OVERHEAD)		EA.
4110000000	904	SIGN ERECTION, TYPE A (GROUND MOUNTED)		EA.
4110000000	904	SIGN ERECTION, TYPE B (GROUND MOUNTED)		EA.
4096000000	904	SIGN ERECTION, TYPE D	11	EA.
4102000000	904	SIGN ERECTION, TYPE E	129	EA.
4108000000	904	SIGN ERECTION, TYPE F	35	EA.
4114000000	904	SIGN ERECTION, MILEMARKERS		EA.
4115000000	904	SIGN ERECTION, OVERLAY (OVERHEAD)		EA.
4116000000	904	SIGN ERECTION, OVERLAY (GROUND MOUNTED)		EA.
4116200000	904	SIGN ERECTION, REPOSITION OVERHEAD		EA.

ITEM NO. DESC. NO.	ITEM NO. SECT. NO.	ITEM DESCRIPTION	QUANTITY	UNIT
4116300000	904	SIGN ERECTION, LOGO TO PANEL		EA.
4116400000	904	SIGN ERECTION, LOGO TRAILBLAZER		EA.
4116500000	904	SIGN ERECTION, WALKWAY		L.M.
4126000000	905	SIGN LIGHTING SYSTEM " "		L.S.
4126000000	905	SIGN LIGHTING SYSTEM " "		L.S.
4126000000	905	SIGN LIGHTING SYSTEM " "		L.S.
4126000000	905	SIGN LIGHTING SYSTEM " "		L.S.
4126000000	905	SIGN LIGHTING SYSTEM " "		L.S.
4129000000	906	RELOCATE SIGN, TYPE A (OVERHEAD)		EA.
4129000000	906	RELOCATE SIGN, TYPE B(OVERHEAD)		EA.
4129000000	906	RELOCATE SIGN, TYPE A (GROUND MOUNTED)		EA.
4129000000	906	RELOCATE SIGN, TYPE B (GROUND MOUNTED)		EA.
4129000000	906	RELOCATE SIGN, TYPE D	2	EA.
4129000000	906	RELOCATE SIGN, TYPE E		EA.
4129000000	906	RELOCATE SIGN, TYPE F		EA.
4129000000	906	RELOCATE SIGN, MILEMARKERS		EA.
4129200000	906	RELOCATE SUPPORT, OVERHEAD SIGN SYSTEM		EA.
4129300000	906	RELOCATE SUPPORT, STEEL BEAM		EA.
4129400000	906	RELOCATE LIGHTING SYSTEM		EA.
4129500000	906	RELOCATE SUPPORT, WOOD		EA.
4138000000	907	DISPOSAL OF SUPPORT, STEEL BEAM		EA.
4141000000	907	DISPOSAL OF SUPPORT, WOOD		EA.
4143000000	907	DISPOSAL OF SUPPORT, OVERHEAD STRUCTURE		EA.
4149000000	907	DISPOSAL OF SIGN SYSTEM, OVERHEAD		EA.
4152000000	907	DISPOSAL OF SIGN SYSTEM, STEEL BEAM		EA.
4155000000	907	DISPOSAL OF SIGN SYSTEM, U-CHANNEL	125	EA.
4158000000	907	DISPOSAL OF SIGN SYSTEM, WOOD		EA.
4192000000	907	DISPOSAL OF SUPPORT, U-CHANNEL	2	EA.
4234000000	907	DISPOSAL OF SIGN, A OR B (OVERHEAD)		EA.
4236000000	907	DISPOSAL OF SIGN, A OR B (GROUND MOUNTED)		EA.
4238000000	907	DISPOSAL OF SIGN, D, E OR F		EA.
4238500000	907	DISPOSAL OF SIGN, MILEMARKERS		EA.
4241000000	907	DISPOSAL OF SIGN, OVERLAY (OVERHEAD)		EA.
4242000000	907	DISPOSAL OF SIGN, OVERLAY (GROUND MOUNTED)		EA.
4251000000	907	DISPOSAL OF LIGHTING SYSTEM		EA.
4258000000	907	DISPOSAL OF LIGHTING FIXTURES		EA.
4263000000	907	DISPOSAL OF WALKWAY		EA.
4132000000	907	STOCKPILE SUPPORT, STEEL BEAM		EA.
4140000000	907	STOCKPILE SUPPORT, WOOD		EA.
4142000000	907	STOCKPILE SUPPORT, OVERHEAD STRUCTURE		EA.
4148000000	907	STOCKPILE SIGN SYSTEM, OVERHEAD		EA.
4151000000	907	STOCKPILE SIGN SYSTEM, STEEL BEAM		EA.
4154000000	907	STOCKPILE SIGN SYSTEM, U-CHANNEL		EA.
4157000000	907	STOCKPILE SIGN SYSTEM, WOOD		EA.
4186000000	907	STOCKPILE SUPPORT, U-CHANNEL		EA.
4228000000	907	STOCKPILE SIGN, A OR B (OVERHEAD)		EA.
4235000000	907	STOCKPILE SIGN, A OR B (GROUND MOUNTED)		EA.
4237000000	907	STOCKPILE SIGN, D, E OR F		EA.
4237500000	907	STOCKPILE SIGN, MILEMARKERS		EA.
4250000000	907	STOCKPILE LIGHTING SYSTEM		EA.

ITEM NO. DESC. NO.	ITEM NO. SECT. NO.	ITEM DESCRIPTION	QUANTITY	UNIT
4252000000	907	STOCKPILE LIGHTING FIXTURES		EA.
4262000000	907	STOCKPILE WALKWAY		EA.
4277000000	908	TEMPORARY SIGN, TYPE A		S.M.
4277000000	908	TEMPORARY SIGN, TYPE B		S.M.
4277000000	908	TEMPORARY SIGN, TYPE D		S.M.
4277000000	908	TEMPORARY SIGN, TYPE E		S.M.
4277000000	908	TEMPORARY SIGN, TYPE F		S.M.
4278000000	908	TEMPORARY RELOCATE SIGN, TYPE A		EA.
4278000000	908	TEMPORARY RELOCATE SIGN, TYPE B		EA.
4278000000	908	TEMPORARY RELOCATE SIGN, TYPE D		EA.
4278000000	908	TEMPORARY RELOCATE SIGN, TYPE E		EA.
4278000000	908	TEMPORARY RELOCATE SIGN, TYPE F		EA.
4279000000	908	TEMPORARY RELOCATE SIGN SUPPORT, STEEL BEAM		EA.
4280000000	908	TEMPORARY RELOCATE SIGN SUPPORT, WOOD		EA.
4285000000	908	TEMPORARY SIGN COVERS		EA.
S	SP	OVERHEAD SIGN ASSEMBLY " "		L.S.
S	SP	OVERHEAD SIGN ASSEMBLY " "		L.S.
S	SP	OVERHEAD SIGN ASSEMBLY " "		L.S.
S	SP	OVERHEAD SIGN ASSEMBLY " "		L.S.
S	SP	LRS LIGHTING FOR OVERHEAD SIGN ASSEMBLY " "		L.S.
S	SP	LRS LIGHTING FOR OVERHEAD SIGN ASSEMBLY " "		L.S.
S	SP	LRS LIGHTING FOR OVERHEAD SIGN ASSEMBLY " "		L.S.
S	SP	LRS LIGHTING FOR OVERHEAD SIGN ASSEMBLY " "		L.S.
S	SP	LRS LIGHTING FOR OVERHEAD SIGN ASSEMBLY " "		L.S.
S	SP	LRS LIGHTING FOR OVERHEAD SIGN ASSEMBLY " "		L.S.
S	SP	LRS LIGHTING FOR OVERHEAD SIGN ASSEMBLY " "		L.S.
S	SP	LRS LIGHTING FOR OVERHEAD SIGN ASSEMBLY " "		L.S.
S	SP	LRS LIGHTING FOR OVERHEAD SIGN ASSEMBLY " "		L.S.
S	SP	LRS LIGHTING FOR OVERHEAD SIGN ASSEMBLY " "		L.S.
S	SP	LRS LIGHTING FOR OVERHEAD SIGN ASSEMBLY " "		L.S.
S	SP	LRS LIGHTING FOR OVERHEAD SIGN ASSEMBLY " "		L.S.
S	SP	LRS LIGHTING FOR OVERHEAD SIGN ASSEMBLY " "		L.S.
S	SP	LRS LIGHTING FOR OVERHEAD SIGN ASSEMBLY " "		L.S.
S	SP	LRS LIGHTING FOR OVERHEAD SIGN ASSEMBLY " "		L.S.
S	SP	OVERHEAD DYNAMIC MESSAGE SIGN ASSEMBLY " "		L.S.
S	SP	OVERHEAD DYNAMIC MESSAGE SIGN SYSTEM " "		L.S.
S	SP	CENTRAL COMMAND COMPUTER SOFTWARE		EA.
S	SP	LAPTOP MAINTENANCE COMPUTER SOFTWARE		EA.
S	SP	DYNAMIC MESSAGE SIGN BENCH TEST UNIT		EA.
S	SP	RELOCATE DYNAMIC MEESAGE SIGN SYSTEM TO NEW LOCATION		EA.
S	SP	OVERHEAD FOOTINGS		C.M.
S	SP			EA.
S	SP			L.S.
S	SP			L.S.

ROADWAY STANDARD DRAWINGS
APPLICABLE TO THESE SIGNING PLANS

901.50
901.70
904.10
904.50

SEPI ENGINEERING GROUP
2300 Rexwoods Drive
Suite 370
Raleigh, NC 27607
Tel:919-789-9977 Fax:789-9591

APPROVED:_____ DATE:_____

NORTH CAROLINA PROFESSIONAL SEAL 20104 ENGINEER SEPHER S. ASFENDI

Sepher Asfendi

8-10-04

SUMMARY OF QUANTITIES

SCALE:	NONE
DATE:	8-04
DWG. BY:	CEK
DESIGN BY:	RCD
REVIEWED BY:	SSA

N. C. DEPARTMENT OF TRANSPORTATION
DIVISION OF HIGHWAYS
TRAFFIC ENGINEERING BRANCH

REVISIONS

CADD FILE

TIP NO.	SHEET NO.
U-2408	SIGN 3

Pay Item Notes:

1	DISPOSAL OF SIGN SYSTEM, U-CHANNEL
2	DISPOSAL OF SUPPORT, U-CHANNEL
3	RELOCATE SIGN, TYPE D

General Notes:

. SIGNS FURNISHED BY STATE

. ALL TYPE 'D' SIGNS SHALL BE MOUNTED ON TW0 U-CHANNEL POSTS UNLESS OTHERWISE INDICATED ON THE PLANS.

. IF REMOVAL OR RELOCATION OF SIGNS ON PRIVATE STREET (NON-STATE MAINTAINED) IS REQUIRED DUE TO CONSTRUCTION, THE CONTRACTOR SHALL INFORM THE ENGINEER. THE WORK WILL BE COMPLETED BY OTHERS.

. SIGNING PLANS DO NOT INCLUDE TEMPORARY CONSTRUCTION SIGNING OR PAVEMENT MARKINGS. SEE TRAFFIC CONTROL PLANS.

. WHEN NOT STATIONED OR DIMENSIONED ON PLANS, ALL 'E' AND 'F' SIGNS SHALL BE FIELD LOCATED BY THE ENGINEER

. ALL EXISTING SIGNS ON "U" CHANNEL POST WITHIN THE PROJECT LIMITS SHALL BE REMOVED AND DISPOSED OF UNLESS OTHERWISE NOTED ON PLANS.

. WHEN EXISTING SIGNS ARE REMOVED AND INSTALLED ON NEW SUPPORTS, THE RE-ERECTION SHALL IMMEDIATELY FOLLOW THE REMOVAL.

. THE BACKGROUND FOR TYPE E & F SIGNS SHALL BE TYPE III REFLECTIVE SHEETING.

Project Notes:

A	RELOCATE "BLACKWOOD BRANCH" SIGNS

SEPI ENGINEERING GROUP
2300 Rexwoods Drive
Suite 370
Raleigh, NC 27607
Tel:919-789-9977 Fax:789-9591

APPROVED:_____ DATE:_____

NORTH CAROLINA PROFESSIONAL SEAL 20104 ENGINEER SEPIDEH S. ASEFNIA

8-10-04

NOTES

SCALE:	NONE
DATE:	8-04
DWG. BY:	CEK
DESIGN BY:	RCD
REVIEWED BY:	SSA

N. C. DEPARTMENT OF TRANSPORTATION
DIVISION OF HIGHWAYS
TRAFFIC ENGINEERING BRANCH

REVISIONS

CADD FILE

TIP NO.	SHEET NO.
U-2408	SIGN 4

METRIC

(401) QUANTITY REQ'D ___

1219 X 1524
R2-1

TWO "U" POSTS PER SIGN

(402) QUANTITY REQ'D _8_

610 X 762
R2-1

ONE "U" POSTS PER SIGN

(403) QUANTITY REQ'D _6_

610 X 762
R2-1

ONE "U" POST PER SIGN

(404) QUANTITY REQ'D ___

610 X 762
R2-1

ONE "U" POST PER SIGN

(405) QUANTITY REQ'D ___

1219 X 1524
R4-3

TWO "U" POSTS PER SIGN

(406) QUANTITY REQ'D ___

1219 X 1219
W4-1 (R)

TWO "U" POSTS PER SIGN

(407) QUANTITY REQ'D ___

1219 X 1219
W4-1 (L)

TWO "U" POSTS PER SIGN

(408) QUANTITY REQ'D ___

450 X 450
R1-1

ONE "U" POST PER SIGN

(409) QUANTITY REQ'D _20

750 X 750
R1-1

ONE "U" POST PER SIGN

(410) QUANTITY REQ'D _4_

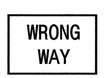

914 X 610
R5-1a

ONE "U" POST PER SIGN

(411) QUANTITY REQ'D _4_

762 X 762
R5-1

ONE "U" POST PER SIGN

(412) QUANTITY REQ'D _13

914 X 914 X 914
R1-2

ONE "U" POST PER SIGN

(413) QUANTITY REQ'D _7_

1372 X 457
R6-1 (R)

MOUNTED BACK TO BACK WITH SIGN 413
IN 1 INSTALLATION
MOUNTED BACK TO BACK WITH SIGN 414
IN 1 INSTALLATION
TWO "U" POSTS PER SIGN

(414) QUANTITY REQ'D _1_

1372 X 457
R6-1 (L)

TWO "U" POSTS PER SIGN

(415) QUANTITY REQ'D ___

914 X 1219

TWO "U" POSTS PER SIGN

(416) QUANTITY REQ'D _9_

600 X 750
R4-7

ONE "U" POST PER SIGN

(417) QUANTITY REQ'D _9_

457 X 457
W23-15

MOUNT BELOW SIGN 416
IN 9 INSTALLATIONS

(418) QUANTITY REQ'D ___

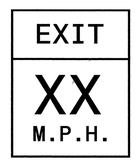

1219 X 1524
W13-2

TWO "U" POSTS PER SIGN

(419) QUANTITY REQ'D ___

762 X 254
S4-3

MOUNT ABOVE SIGN ____
IN____ INSTALLATIONS

(420) QUANTITY REQ'D ___

762 X 475
W16-7

MOUNT BELOW SIGN ____
IN____ INSTALLATIONS

YELLOW/GREEN REFLECTIVE SHEETING

ONE "U" POSTS PER SIGN

(421) QUANTITY REQ'D ___

914 X 914
S1-1

YELLOW/GREEN REFLECTIVE SHEETING

ONE "U" POSTS PER SIGN

(422) QUANTITY REQ'D ___

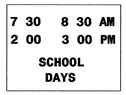

914 X 762
S2-1

MOUNT BELOW SIGN ____
IN____ INSTALLATIONS

(423) QUANTITY REQ'D ___

610 X 762
S5-2

ONE "U" POST PER SIGN

(424) QUANTITY REQ'D ___

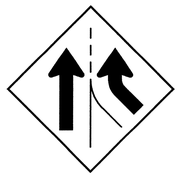

1219 X 1219
W4-3(R)

TWO "U" POSTS PER SIGN

(425) QUANTITY REQ'D ___

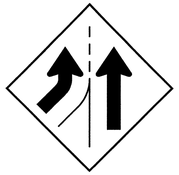

1219 X 1219
W4-3(L)

TWO "U" POSTS PER SIGN

(426) QUANTITY REQ'D ___

1219 X 1219
W19-10(L)

TWO "U" POSTS PER SIGN

(427) QUANTITY REQ'D ___

1219 X 1219
W19-10(L)

TWO "U" POSTS PER SIGN

(428) QUANTITY REQ'D ___

1219 X 1219
W9-1(L)

TWO "U" POSTS PER SIGN

(429) QUANTITY REQ'D ___

1219 X 1219
W9-2(L)

TWO "U" POSTS PER SIGN

(430) QUANTITY REQ'D ___

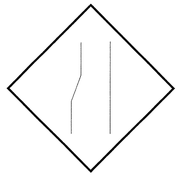

1219 X 1219
W19-10(L)

TWO "U" POSTS PER SIGN

(431) QUANTITY REQ'D _1_

1219 X 1219
W19-10(R)

TWO "U" POSTS PER SIGN

(432) QUANTITY REQ'D ___

1219 X 1219
W19-10(R)

TWO "U" POSTS PER SIGN

NOTE: THIS DRAWING IS DIMENSIONED IN MILLIMETERS UNLESS OTHERWISE DEPICTED WITHIN THE DRAWING.

SEPI ENGINEERING GROUP
2300 Rexwoods Drive
Suite 370
Raleigh, NC 27607
Tel:919-789-9977 Fax:789-9591

APPROVED:_____ DATE:_____

NORTH CAROLINA PROFESSIONAL SEAL 20104 ENGINEER STEPHEN S. ASEFNIA

8-10-04

TYPE "E" SIGNS

SCALE:	NONE
DATE:	8-04
DWG. BY:	CEK
DESIGN BY:	RCD
REVIEWED BY:	SSA

N. C. DEPARTMENT OF TRANSPORTATION
DIVISION OF HIGHWAYS
TRAFFIC ENGINEERING BRANCH

REVISIONS

CADD FILE

TIP NO.	SHEET NO.
U-2408	SIGN 5

METRIC

(433) QUANTITY REQ'D _1_

1219 X 1219
W9-2(R)

TWO "U" POSTS PER SIGN

(434) QUANTITY REQ'D ___

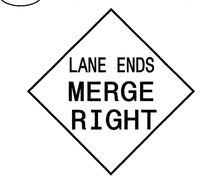

1219 X 1219
W9-2(R)

TWO "U" POSTS PER SIGN

(435) QUANTITY REQ'D _1_

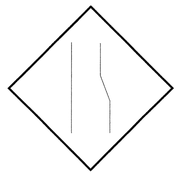

1219 X 1219
W19-10(R)

TWO "U" POSTS PER SIGN

(436) QUANTITY REQ'D ___

914 X 1219
R4-8

TWO "U" POSTS PER SIGN

(437) QUANTITY REQ'D ___

610 X 762
R4-8

ONE "U" POST PER SIGN

(438) QUANTITY REQ'D ___

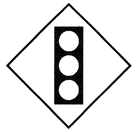

914 X 914
W3-3

ONE "U" POST PER SIGN

(439) QUANTITY REQ'D ___

914 X 914
W3-1a

ONE "U" POST PER SIGN

(440) QUANTITY REQ'D ___

914 X 914
W3-2a

ONE "U" POST PER SIGN

(441) QUANTITY REQ'D ___

914 X 914
W6-1

ONE "U" POST PER SIGN

(442) QUANTITY REQ'D ___

914 X 914
W6-2

ONE "U" POST PER SIGN

(443) QUANTITY REQ'D ___

914 X 914
W1-2L

ONE "U" POST PER SIGN

(444) QUANTITY REQ'D ___

914 X 914
W1-2R

ONE "U" POST PER SIGN

(445) QUANTITY REQ'D _1_

914 X 914
W10-3L

ONE "U" POST PER SIGN

(446) QUANTITY REQ'D _2_

914 X 914
W10-3R

ONE "U" POST PER SIGN

(447) QUANTITY REQ'D ___

BEGIN 35
1000 FT
AHEAD

1219 X 914
R2-80

TWO "U" POST PER SIGN

(448) QUANTITY REQ'D ___

914 X 914
W2-1

ONE "U" POSTS PER SIGN

(449) QUANTITY REQ'D ___

1219 X 1219
W17-12

TWO "U" POSTS PER SIGN

(450) QUANTITY REQ'D ___

914 X 914
W17-12

ONE "U" CHANNEL POST.

(451) QUANTITY REQ'D ___

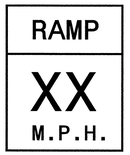

1219 X 1524
W13-3

TWO "U" POSTS PER SIGN

(452) QUANTITY REQ'D _1_

914 X 914
W6-3

ONE "U" POST PER SIGN

(453) QUANTITY REQ'D _1_

REDUCE
SPEED
AHEAD

914 X 1219
R2-5

TWO "U" POSTS PER SIGN

(454) QUANTITY REQ'D _2_

LOW GROUND
CLEARANCE

600 X 450
W10-5P

MOUNTED UNDER SIGN 465 IN 2 INSTALLATIONS

(455) QUANTITY REQ'D _3_

610 X 610
R3-2

ONE "U" POST PER SIGN

(456) QUANTITY REQ'D _3_

610 X 610
R3-4

MOUNTED BACK TO BACK WITH SIGN 416
IN 3 INSTALLATIONS

(457) QUANTITY REQ'D _1_

DO NOT
STOP
ON TRACKS

610 X 762
R8-8

MOUNTED BELOW SIGN 460 IN 1 INSTALLATION

(458) QUANTITY REQ'D _2_

NO
OUTLET

762 X 762
W14-2

ONE "U" POST PER SIGN

(459) QUANTITY REQ'D _2_

914 X 1219
R3-9b

TWO "U" POST PER SIGN

(460) QUANTITY REQ'D _4_

914 DIA.
W10-1

ONE "U" POST PER SIGN

(461) QUANTITY REQ'D _4_

SHARE
THE
ROAD

450 X 600
W16-1

MOUNTED UNDER SIGN 463 IN 4 INSTALLATIONS

(462) QUANTITY REQ'D _12

305 X 457
R7-1

ONE "U" POST PER SIGN

(463) QUANTITY REQ'D _4_

762 X 762
W11-1

ONE "U" POST PER SIGN

(464) QUANTITY REQ'D _1_

TRUCKS
ENTERING
DRIVEWAY

914 X 914
W14-12

ONE "U" POST PER SIGN

(465) QUANTITY REQ'D _2_

762 X 762
W10-5

MOUNTED UNDER SIGN 445 IN 1 INSTALLATIONS
MOUNTED UNDER SIGN 446 IN 1 INSTALLATIONS

NOTE: THIS DRAWING IS DIMENSIONED
IN MILLIMETERS UNLESS OTHERWISE
DEPICTED WITHIN THE DRAWING.

SEPI ENGINEERING GROUP
2300 Rexwoods Drive
Suite 370
Raleigh, NC 27607
Tel:919-789-9977 Fax:789-9591

APPROVED:_____ DATE:_____

NORTH CAROLINA PROFESSIONAL SEAL 20104 ENGINEER SERGIO S. ASCEDO

Sergio S. Ascedo
8-10-04

TYPE "E" SIGNS

SCALE:	NONE
DATE:	8-04
DWG. BY:	CEK
DESIGN BY:	RCD
REVIEWED BY:	SSA

N. C. DEPARTMENT OF
TRANSPORTATION
DIVISION OF HIGHWAYS
TRAFFIC ENGINEERING
BRANCH

REVISIONS

CADD FILE

METRIC	TIP NO.	SHEET NO.
	U-2408	SIGN 6

501

2-600 X 300
2-600 X 600
2-525 X 375

TWO "U" POST

506

2-600 X 300
2-600 X 600
2-525 X 375

TWO "U" POSTS

512

2-600 X 300
2-600 X 600
2-525 X 375

TWO "U" POSTS

520

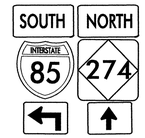

2-600 X 300
2-600 X 600
2-525 X 375

TWO "U" POSTS

534

2-600 X 300
2-600 X 600
2-525 X 375
2-600 X 300
2-600 X 600
2-525 X 375

TWO "U" POSTS

502 510 522 525 526 531

1-600 X 300
1-600 X 600

ONE "U" POST

507

2-600 X 300
2-600 X 600
2-525 X 375

MOUNTED UNDER SIGN 301

515 518 529

2-600 X 300
2-600 X 600
2-525 X 375

SIGN 515 MOUNTED UNDER SIGN 303
SIGN 518 MOUNTED UNDER SIGN 305
SIGN 529 MOUNTED ON 2 "U" POSTS

521

1-600 X 300
1-600 X 600
1-525 X 375

ONE "U" POST

535

2-600 X 300
2-600 X 600
2-525 X 375

TWO "U" POSTS

503

2-600 X 300
2-600 X 600
2-525 X 375

TWO "U" POST

508 513 514 523 527 530

1-600 X 300
1-600 X 600

ONE "U" POST

516

2-600 X 300
2-600 X 600
2-525 X 375

ONE "U" POST

532

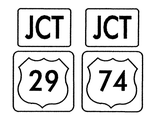

2-525 X 375
2-600 X 600

TWO "U" POSTS

504

1-600 X 300
1-600 X 600

ONE "U" POST

509

1-525 X 375

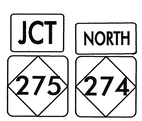

1-600 X 300
2-600 X 600

TWO "U" POSTS

517

1-600 X 300
1-600 X 600
1-525 X 375

MOUNTED UNDER SIGN 304

533

1-600 X 300
1-600 X 600
1-525 X 375

MOUNTED UNDER SIGN 311

505 528

1-525 X 375
1-600 X 600

ONE "U" POST

511 524

1-525 X 375
1-600 X 600

ONE "U" POST

519

2-600 X 300
2-600 X 600
2-525 X 375

MOUNTED UNDER SIGN 306

NOTE: THIS DRAWING IS DIMENSIONED IN MILLIMETERS UNLESS OTHERWISE DEPICTED WITHIN THE DRAWING.

SEPI ENGINEERING GROUP
2300 Rexwoods Drive
Suite 370
Raleigh, NC 27607
Tel:919-789-9977 Fax:789-9591

APPROVED:_____ DATE:_____

SEAL 20104 ENGINEER SETHUN S. ASETHAN
8-10-04

TYPE "F" SIGNS

SCALE: NONE	N. C. DEPARTMENT OF TRANSPORTATION DIVISION OF HIGHWAYS TRAFFIC ENGINEERING BRANCH	REVISIONS
DATE: 8-04		
DWG. BY: CEK		
DESIGN BY: RCD		
REVIEWED BY: SSA		CADD FILE

8/11/04 8:11:04

METRIC	PROJECT REFERENCE NO.	SHEET NO.
	U-2408	SIGN 7

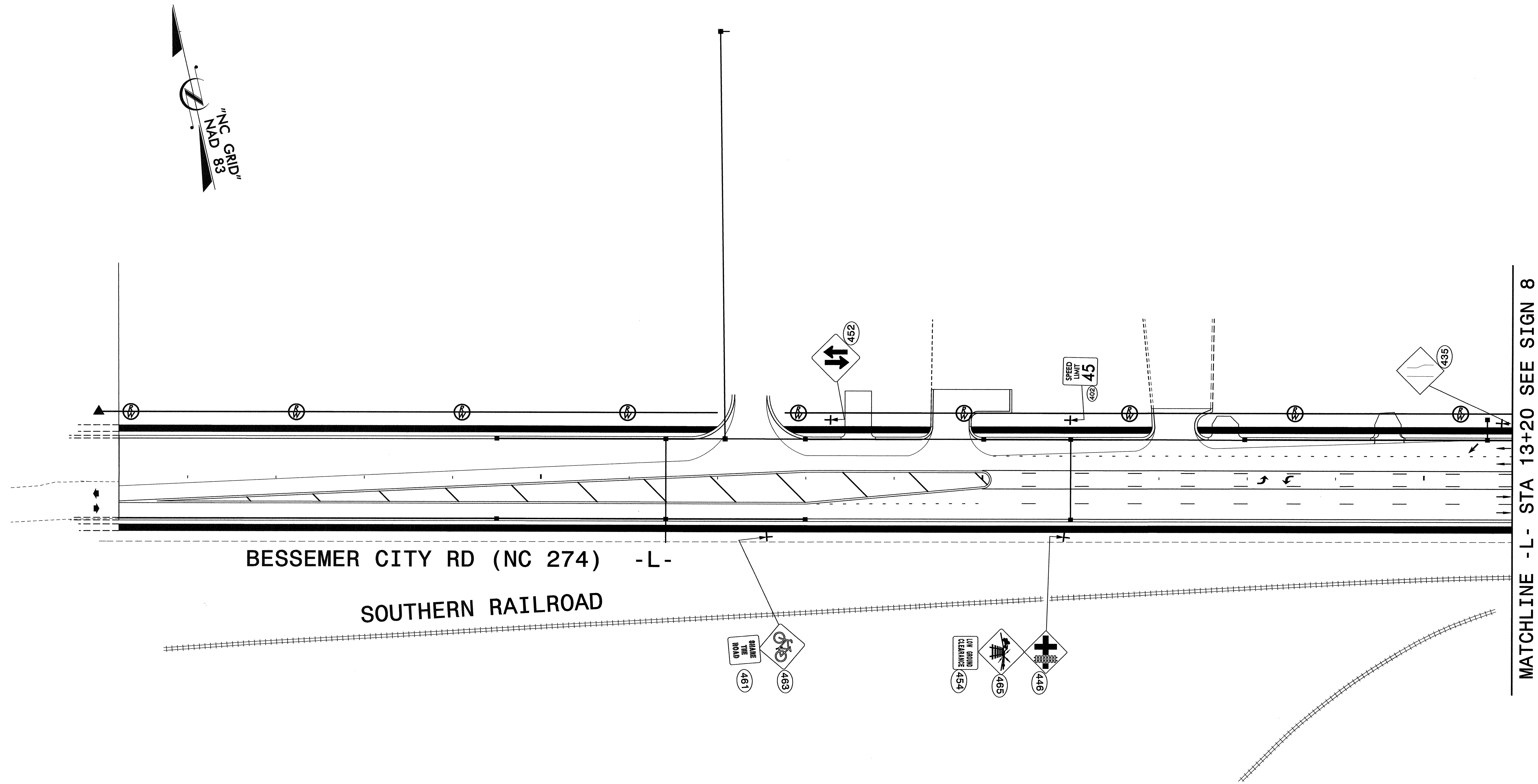

$$$$$SYSTIME$$$$
$$$$$$$$$$$$$DGN$$$$$$$$$$$$$$$$$$$
$$$$USERNAME$$$$

SEPI ENGINEERING GROUP
2300 Rexwoods Drive
Suite 370
Raleigh, NC 27607
Tel:919-789-9977 Fax:789-9591

APPROVED:________________ DATE:________

NORTH CAROLINA PROFESSIONAL SEAL 20104 ENGINEER SEPIDEH S. ASEFNIA

8-10-04

NC 274 BESSEMER CITY ROAD
PROPOSED SIGNS

SCALE:	NONE	N. C. DEPARTMENT OF TRANSPORTATION DIVISION OF HIGHWAYS TRAFFIC ENGINEERING BRANCH	REVISIONS
DATE:	8-04		
DWG. BY:	CEK		
DESIGN BY:	RCD		
REVIEWED BY:	SSA		CADD FILE

METRIC	PROJECT REFERENCE NO.	SHEET NO.
	U-2408	SIGN 8

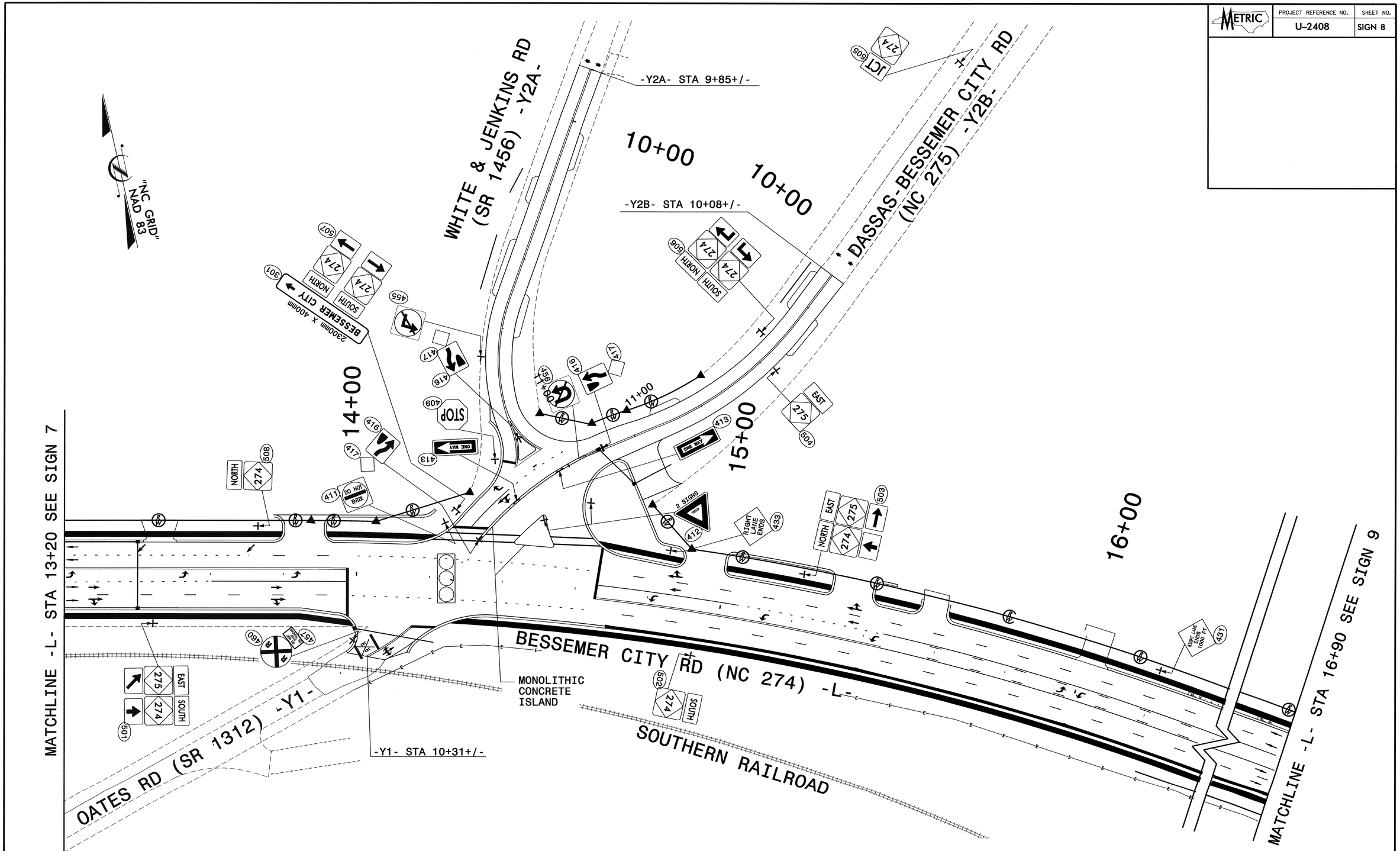

APPROVED: _____ DATE: _____

NC 274 BESSEMER CITY ROAD
PROPOSED SIGNS

SCALE:	NONE
DATE:	8-04
DWG. BY:	CEK
DESIGN BY:	RCD
REVIEWED BY:	SSA

N. C. DEPARTMENT OF TRANSPORTATION
DIVISION OF HIGHWAYS
TRAFFIC ENGINEERING BRANCH

REVISIONS

CADD FILE

SEPI ENGINEERING GROUP
2300 Rexwoods Drive
Suite 370
Raleigh, NC 27607
Tel:919-789-9977 Fax:789-9591

NORTH CAROLINA PROFESSIONAL SEAL 20104 ENGINEER SEPIDEH S. ASEFNIA
8-10-04

METRIC	PROJECT REFERENCE NO.	SHEET NO.
	U-2408	SIGN 9

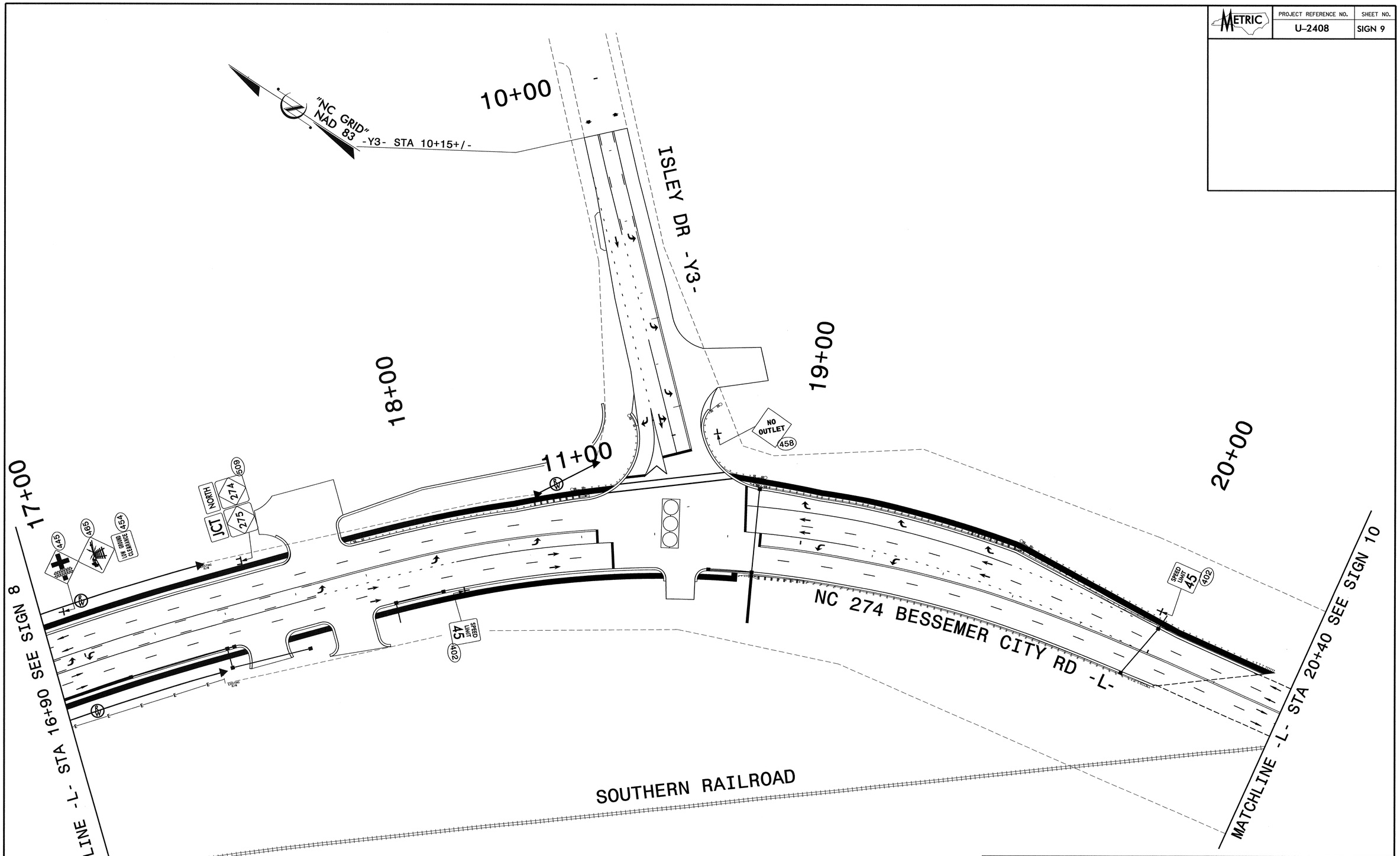

SEPI ENGINEERING GROUP
2300 Rexwoods Drive
Suite 370
Raleigh, NC 27607
Tel:919-789-9977 Fax:789-9591

APPROVED:_____ DATE:_____

NORTH CAROLINA PROFESSIONAL ENGINEER 20104 SEPIDEH S. ASEFNIA
8-10-04

NC 274 BESSEMER CITY ROAD
PROPOSED SIGNS

SCALE:	NONE
DATE:	8-04
DWG. BY:	CEK
DESIGN BY:	RCD
REVIEWED BY:	SSA

N. C. DEPARTMENT OF TRANSPORTATION
DIVISION OF HIGHWAYS
TRAFFIC ENGINEERING BRANCH

REVISIONS

CADD FILE

METRIC	PROJECT REFERENCE NO.	SHEET NO.
	U–2408	SIGN 10

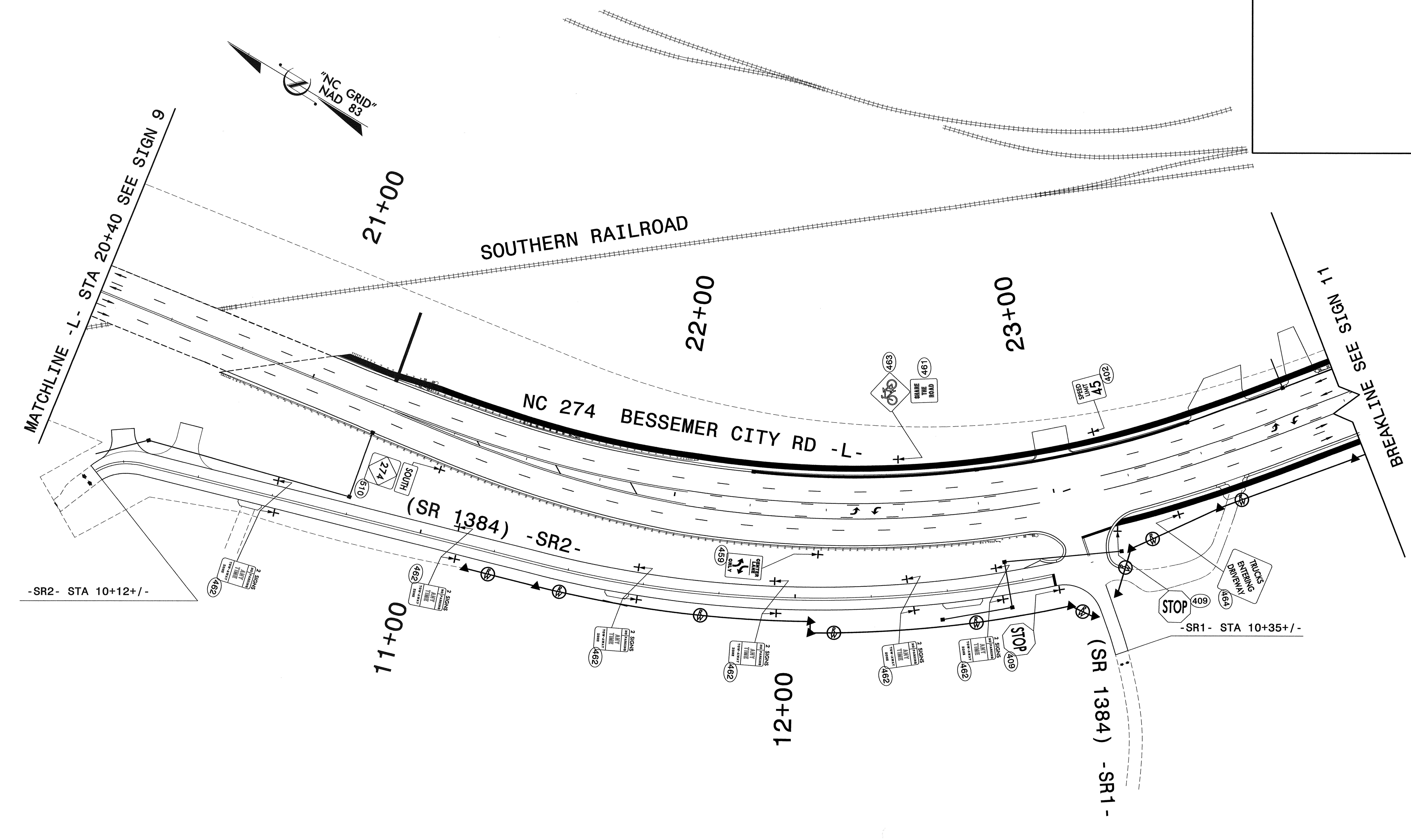

SEPI ENGINEERING GROUP
2300 Rexwoods Drive
Suite 370
Raleigh, NC 27607
Tel:919-789-9977 Fax:789-9591

APPROVED:__________ DATE:______

NORTH CAROLINA PROFESSIONAL SEAL 20104 ENGINEER SEPIDEH S. ASEFNIA
8-10-04

NC 274 BESSEMER CITY ROAD
PROPOSED SIGNS

SCALE:	NONE
DATE:	8–04
DWG. BY:	CEK
DESIGN BY:	RCD
REVIEWED BY:	SSA

N. C. DEPARTMENT OF TRANSPORTATION
DIVISION OF HIGHWAYS
TRAFFIC ENGINEERING BRANCH

REVISIONS

CADD FILE

$$$$$SYSTIME$$$$$
$$$$$$$$$$$$DGN$$$$$$$$$$$$$$$$$$
$$$$USERNAME$$$$

METRIC	PROJECT REFERENCE NO.	SHEET NO.
	U-2408	SIGN 11

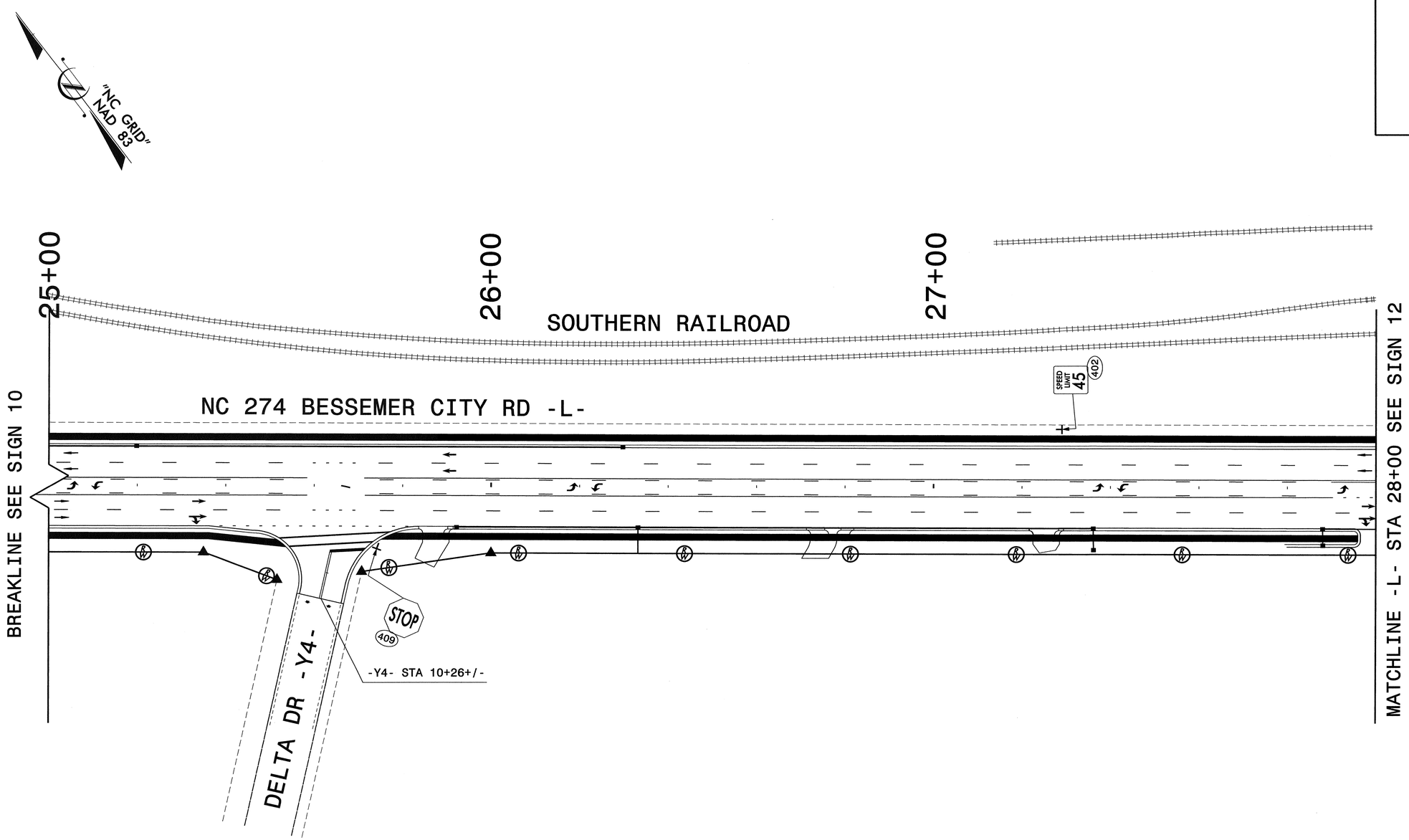

SEPI ENGINEERING GROUP
2300 Rexwoods Drive
Suite 370
Raleigh, NC 27607
Tel:919-789-9977 Fax:789-9591

APPROVED:_____ DATE:_____

NORTH CAROLINA PROFESSIONAL SEAL 20104 ENGINEER SEBOUH S. ASCERIAN

8-10-04

NC 274 BESSEMER CITY ROAD
PROPOSED SIGNS

SCALE:	NONE
DATE:	8-04
DWG. BY:	CEK
DESIGN BY:	RCD
REVIEWED BY:	SSA

N. C. DEPARTMENT OF TRANSPORTATION
DIVISION OF HIGHWAYS
TRAFFIC ENGINEERING BRANCH

REVISIONS	
CADD FILE	

$$$$$SYSTIME$$$$
$$$$$$$$$$$$$$$$$$$$DGN$$$$$$$$$$$$$$$$$$$$
$$$$USERNAME$$$$

METRIC	PROJECT REFERENCE NO.	SHEET NO.
	U–2408	SIGN 12

$$$$$$SYSTIME$$$$$
$$$$$$$$$$$$$$$$DGN$$$$$$$$$$$$$$$$$$$$
$$$$USERNAME$$$$$

SEPI ENGINEERING GROUP
2300 Rexwoods Drive
Suite 370
Raleigh, NC 27607
Tel:919-789-9977 Fax:789-9591

APPROVED:________________ DATE:________

NORTH CAROLINA PROFESSIONAL SEAL 20104 ENGINEER SEPIDEH S. ASEFNIA

8-10-04

NC 274 BESSEMER CITY ROAD
PROPOSED SIGNS

SCALE:	NONE	N. C. DEPARTMENT OF TRANSPORTATION DIVISION OF HIGHWAYS TRAFFIC ENGINEERING BRANCH	REVISIONS
DATE:	8–04		
DWG. BY:	CEK		
DESIGN BY:	RCD		
REVIEWED BY:	SSA		CADD FILE

METRIC	PROJECT REFERENCE NO.	SHEET NO.
	U–2408	SIGN 13

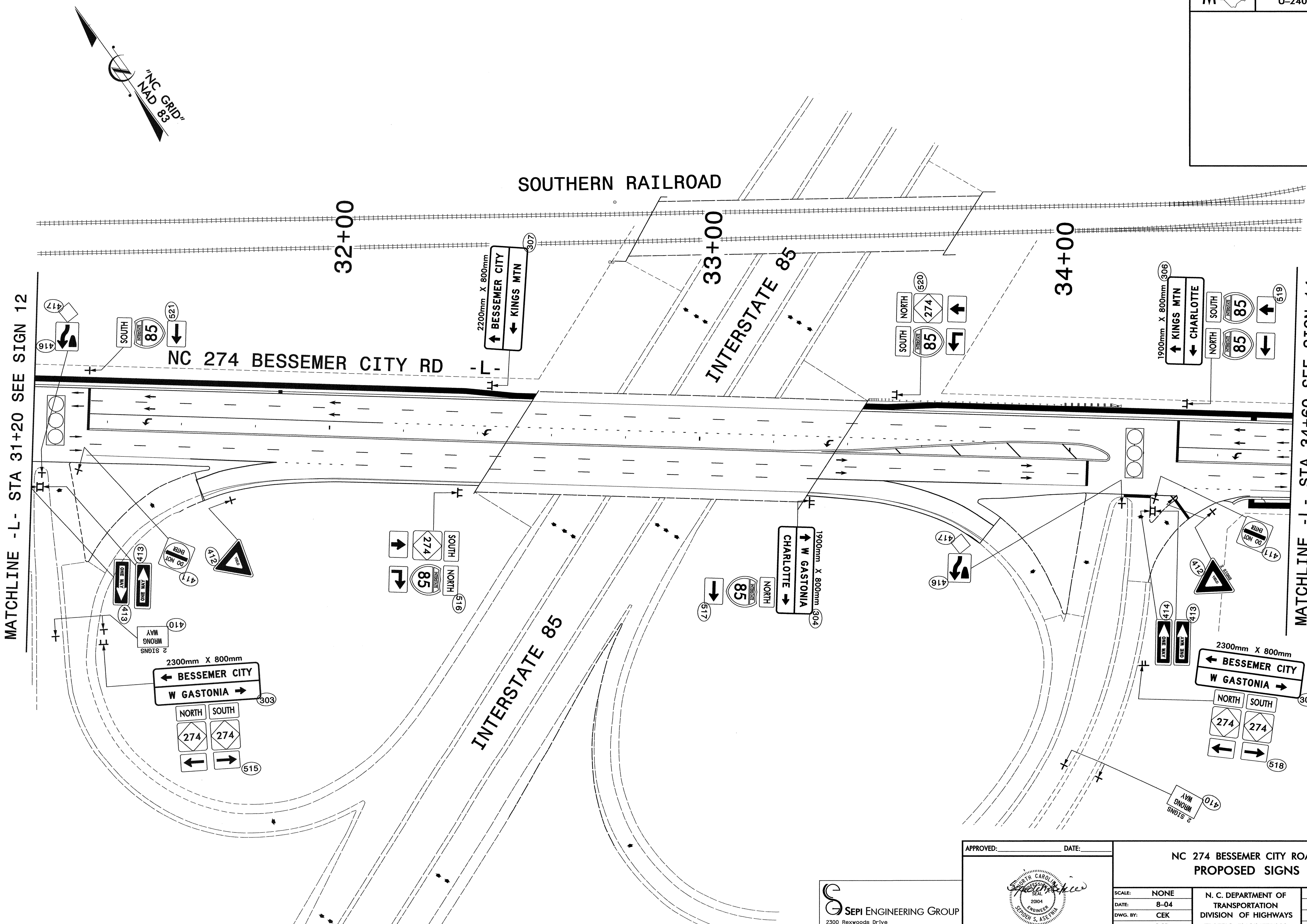

SEPI ENGINEERING GROUP
2300 Rexwoods Drive
Suite 370
Raleigh, NC 27607
Tel:919-789-9977 Fax:789-9591

APPROVED:__________ DATE:_______

NORTH CAROLINA PROFESSIONAL SEAL 20104 ENGINEER SEPIDEH S. ASEFNIA
8-10-04

NC 274 BESSEMER CITY ROAD
PROPOSED SIGNS

SCALE:	NONE
DATE:	8–04
DWG. BY:	CEK
DESIGN BY:	RCD
REVIEWED BY:	SSA

N. C. DEPARTMENT OF TRANSPORTATION
DIVISION OF HIGHWAYS
TRAFFIC ENGINEERING BRANCH

REVISIONS

CADD FILE

$$$$$SYSTIME$$$$$
$$$$$$$$$$$$$$$$DGN$$$$$$$$$$$$$$$$
$$$$USERNAME$$$$

METRIC	PROJECT REFERENCE NO.	SHEET NO.
	U-2408	SIGN 14

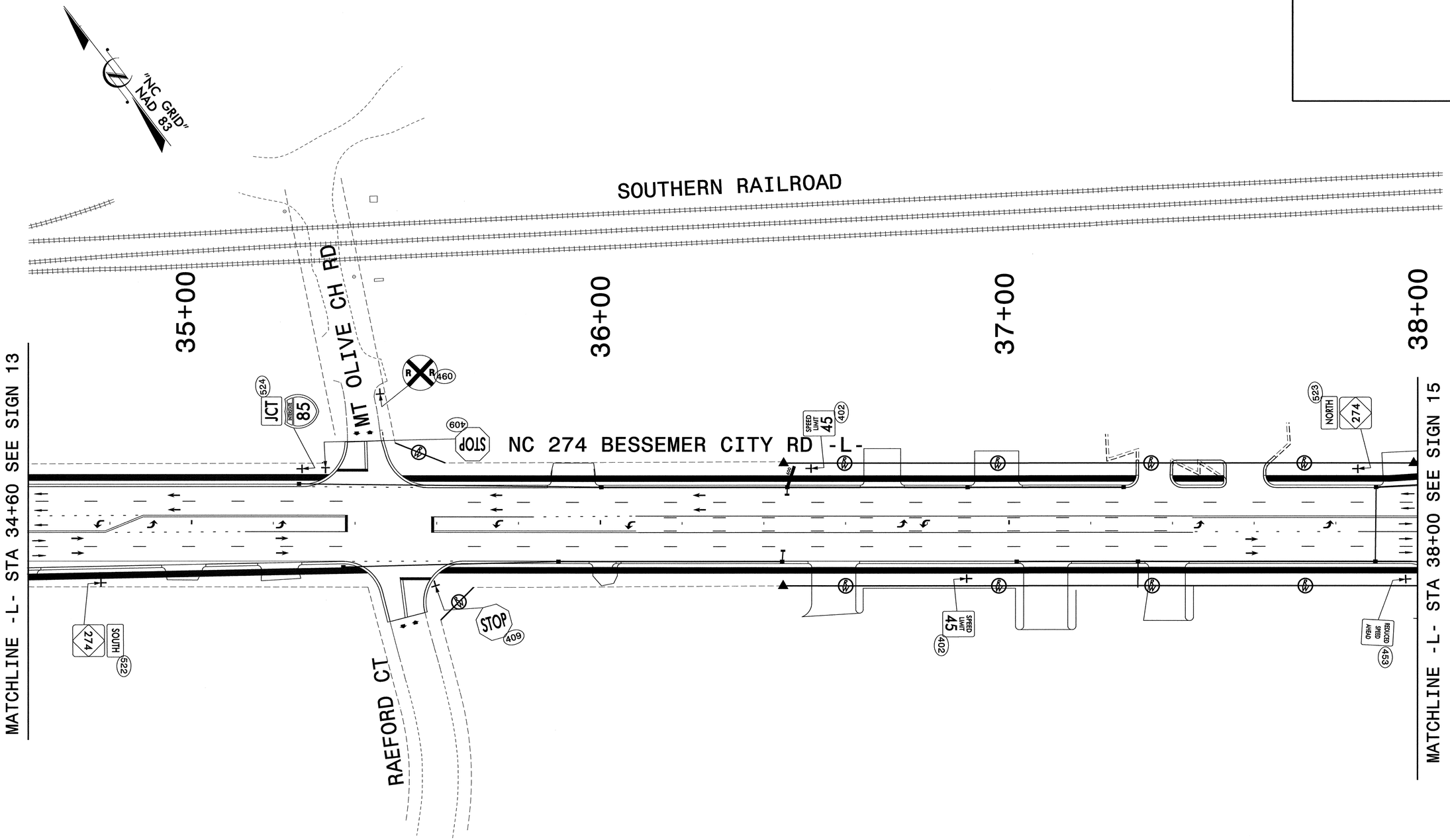

SEPI ENGINEERING GROUP
2300 Rexwoods Drive
Suite 370
Raleigh, NC 27607
Tel:919-789-9977 Fax:789-9591

APPROVED:_____ DATE:_____

NORTH CAROLINA PROFESSIONAL ENGINEER 20104 SEPIDEH S. ASEFNIA
8-10-04

NC 274 BESSEMER CITY ROAD
PROPOSED SIGNS

SCALE:	NONE
DATE:	8-04
DWG. BY:	CEK
DESIGN BY:	RCD
REVIEWED BY:	SSA

N. C. DEPARTMENT OF TRANSPORTATION
DIVISION OF HIGHWAYS
TRAFFIC ENGINEERING BRANCH

REVISIONS

CADD FILE

PROJECT REFERENCE NO.	SHEET NO.
U-2408	SIGN 15

SEPI ENGINEERING GROUP
2300 Rexwoods Drive
Suite 370
Raleigh, NC 27607
Tel:919-789-9977 Fax:789-9591

APPROVED:____________ DATE:________

NORTH CAROLINA PROFESSIONAL SEAL 20104 ENGINEER SEPIDEH S. ASEFNIA

8-10-04

NC 274 BESSEMER CITY ROAD
PROPOSED SIGNS

SCALE:	NONE
DATE:	8-04
DWG. BY:	CEK
DESIGN BY:	RCD
REVIEWED BY:	SSA

N. C. DEPARTMENT OF TRANSPORTATION
DIVISION OF HIGHWAYS
TRAFFIC ENGINEERING BRANCH

REVISIONS

CADD FILE

$$$$$$SYSTIME$$$$$
$$$$$$$$$$$$$$DGN$$$$$$$$$$$$$$$$
$$$$USERNAME$$$$

METRIC	PROJECT REFERENCE NO.	SHEET NO.
	U-2408	SIGN 16

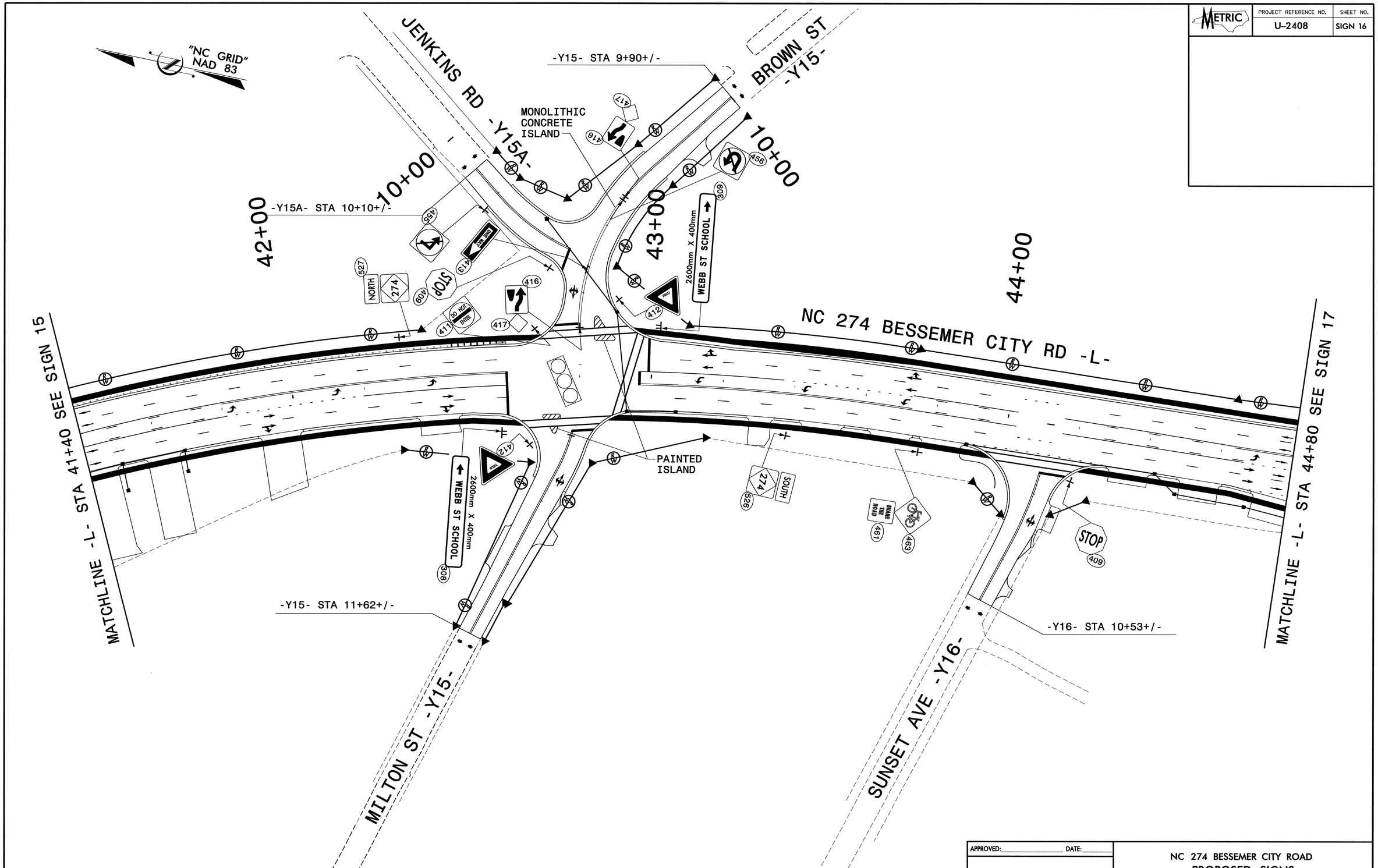

APPROVED:_____ DATE:_____

SEPI ENGINEERING GROUP
2300 Rexwoods Drive
Suite 370
Raleigh, NC 27607
Tel:919-789-9977 Fax:789-9591

NORTH CAROLINA PROFESSIONAL SEAL 20104 ENGINEER SEPIDEH S. ASEFNIA
10-8-04

NC 274 BESSEMER CITY ROAD
PROPOSED SIGNS

SCALE:	NONE
DATE:	8-04
DWG. BY:	CEK
DESIGN BY:	RCD
REVIEWED BY:	SSA

N. C. DEPARTMENT OF TRANSPORTATION
DIVISION OF HIGHWAYS
TRAFFIC ENGINEERING BRANCH

REVISIONS

CADD FILE

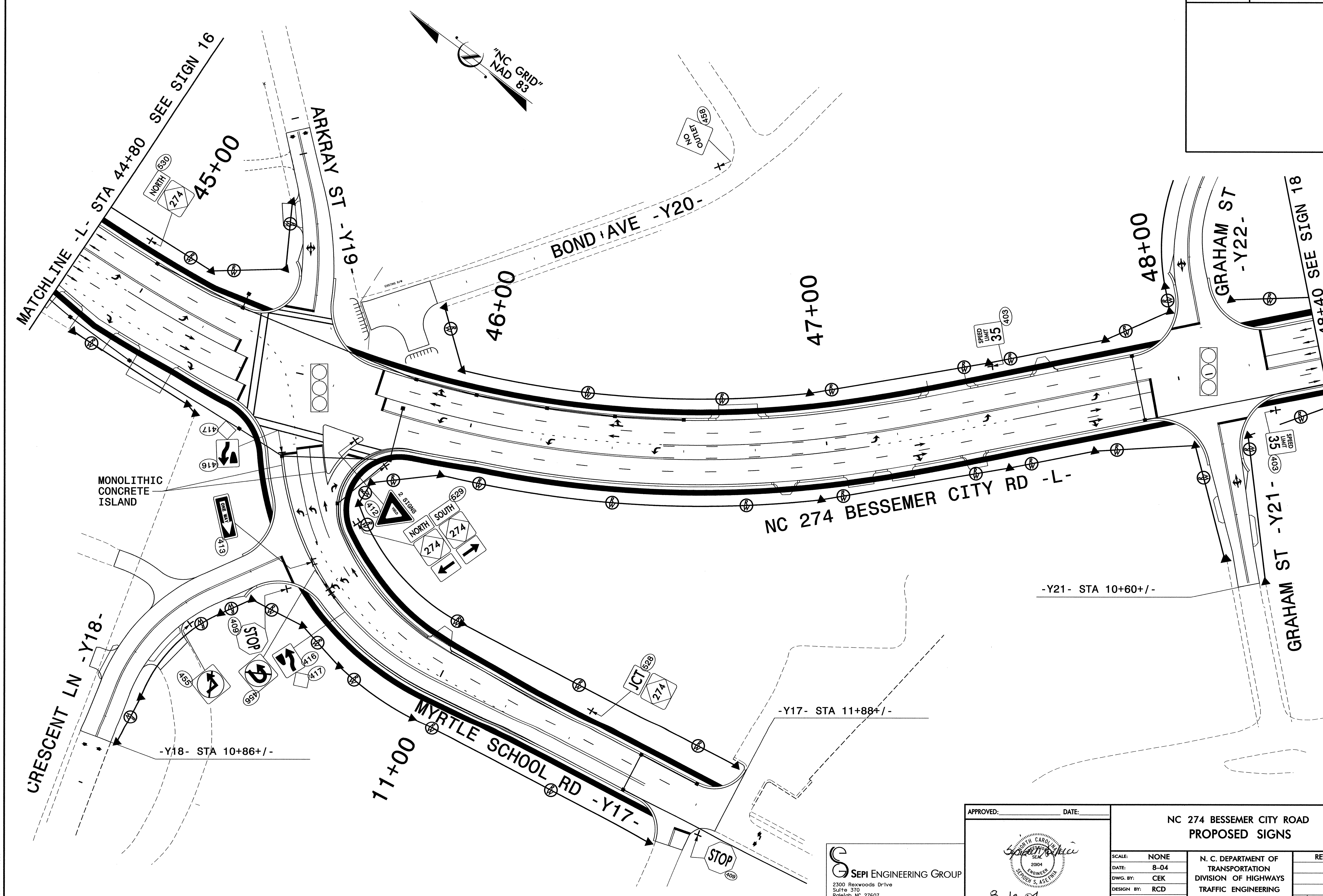

METRIC

PROJECT REFERENCE NO.	SHEET NO.
U-2408	SIGN 17

SEPI ENGINEERING GROUP
2300 Rexwoods Drive
Suite 370
Raleigh, NC 27607
Tel:919-789-9977 Fax:789-9591

APPROVED:__________ DATE:______

NORTH CAROLINA PROFESSIONAL ENGINEER SEAL 20104 SEPIDEH S. ASEFNIA

8-10-04

NC 274 BESSEMER CITY ROAD
PROPOSED SIGNS

SCALE:	NONE
DATE:	8-04
DWG. BY:	CEK
DESIGN BY:	RCD
REVIEWED BY:	SSA

N. C. DEPARTMENT OF TRANSPORTATION
DIVISION OF HIGHWAYS
TRAFFIC ENGINEERING BRANCH

REVISIONS

CADD FILE

$$$$$SYSTIME$$$$$
$$$$$$$$$$$$$$DGN$$$$$$$$$$$$$$$$
$$$$USERNAME$$$$

METRIC	PROJECT REFERENCE NO.	SHEET NO.
	U-2408	SIGN 19

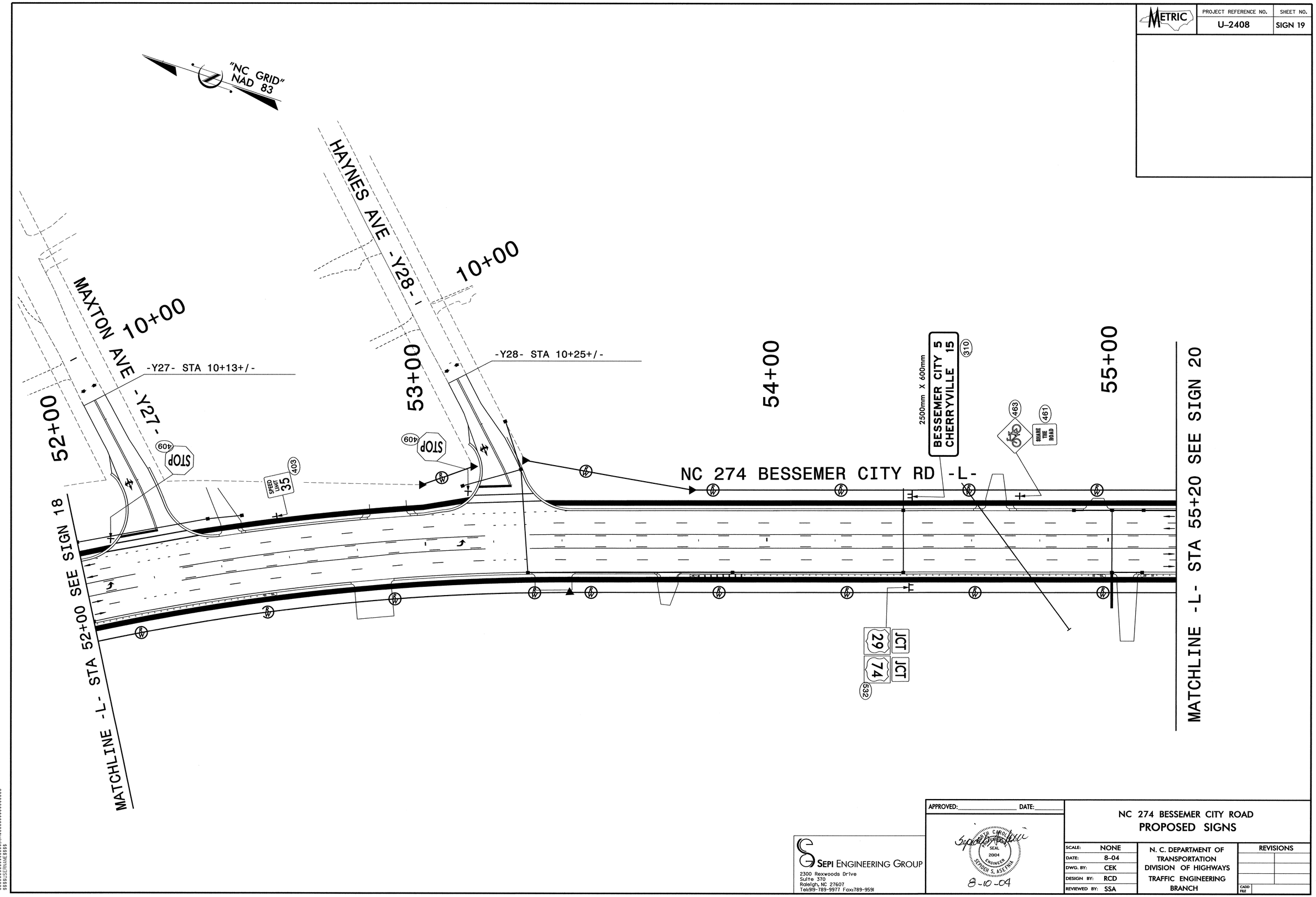

SEPI ENGINEERING GROUP
2300 Rexwoods Drive
Suite 370
Raleigh, NC 27607
Tel:919-789-9977 Fax:789-9591

APPROVED:_____ DATE:_____

NORTH CAROLINA PROFESSIONAL SEAL 20104 ENGINEER SEPIDEH S. ASEFNIA

8-10-04

NC 274 BESSEMER CITY ROAD
PROPOSED SIGNS

SCALE:	NONE
DATE:	8-04
DWG. BY:	CEK
DESIGN BY:	RCD
REVIEWED BY:	SSA

N. C. DEPARTMENT OF TRANSPORTATION
DIVISION OF HIGHWAYS
TRAFFIC ENGINEERING BRANCH

REVISIONS

CADD FILE

METRIC	PROJECT REFERENCE NO.	SHEET NO.
	U-2408	SIGN 20

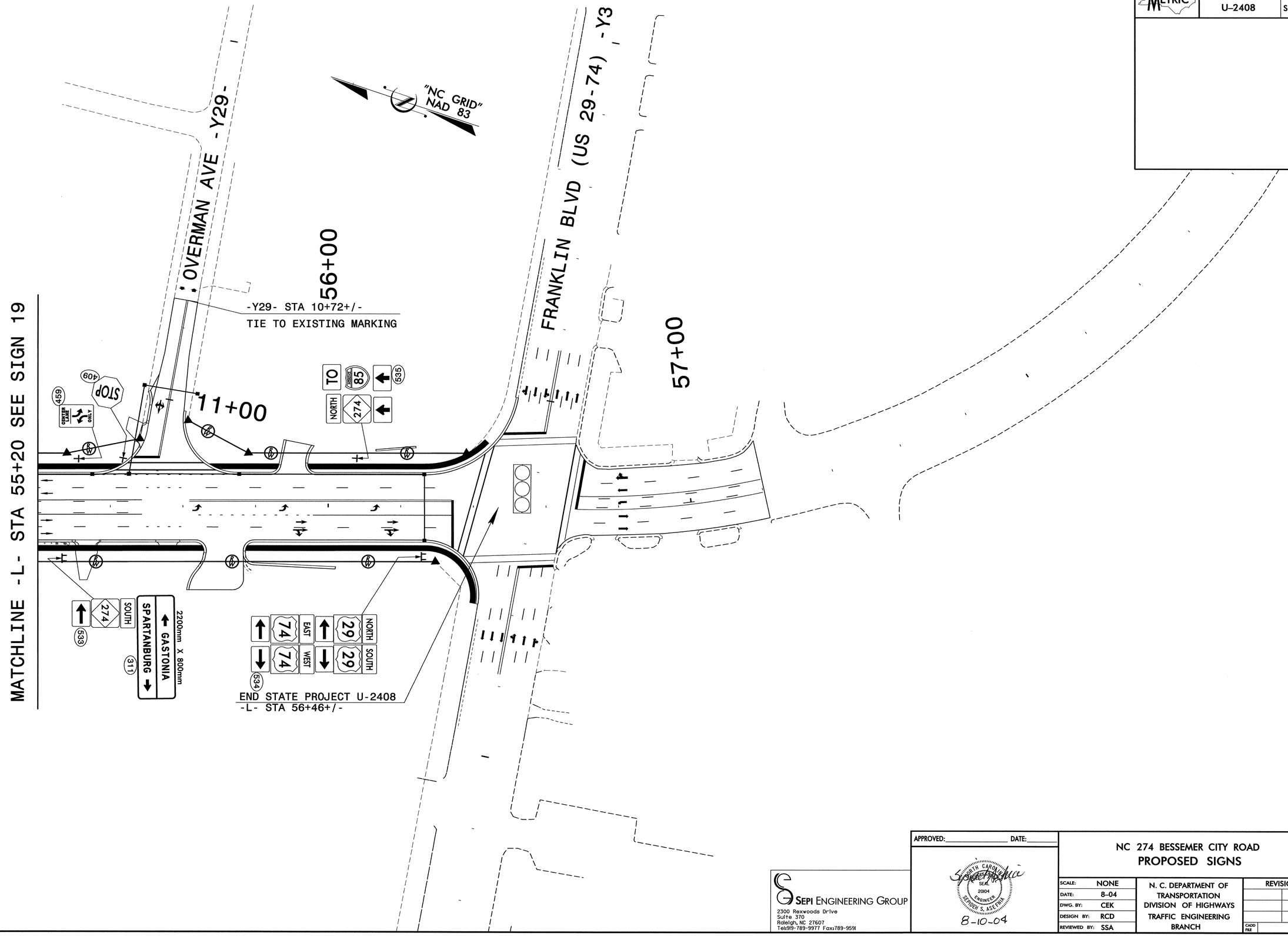

SEPI ENGINEERING GROUP
2300 Rexwoods Drive
Suite 370
Raleigh, NC 27607
Tel:919-789-9977 Fax:789-9591

APPROVED:_____ DATE:_____

NORTH CAROLINA SEAL 20104 ENGINEER SEPIDEH S. ASEFNIA

8-10-04

NC 274 BESSEMER CITY ROAD
PROPOSED SIGNS

SCALE:	NONE
DATE:	8-04
DWG. BY:	CEK
DESIGN BY:	RCD
REVIEWED BY:	SSA

N. C. DEPARTMENT OF TRANSPORTATION
DIVISION OF HIGHWAYS
TRAFFIC ENGINEERING BRANCH

REVISIONS

CADD FILE

METRIC	PROJECT REFERENCE NO.	SHEET NO.
	U-2408	SIGN 21

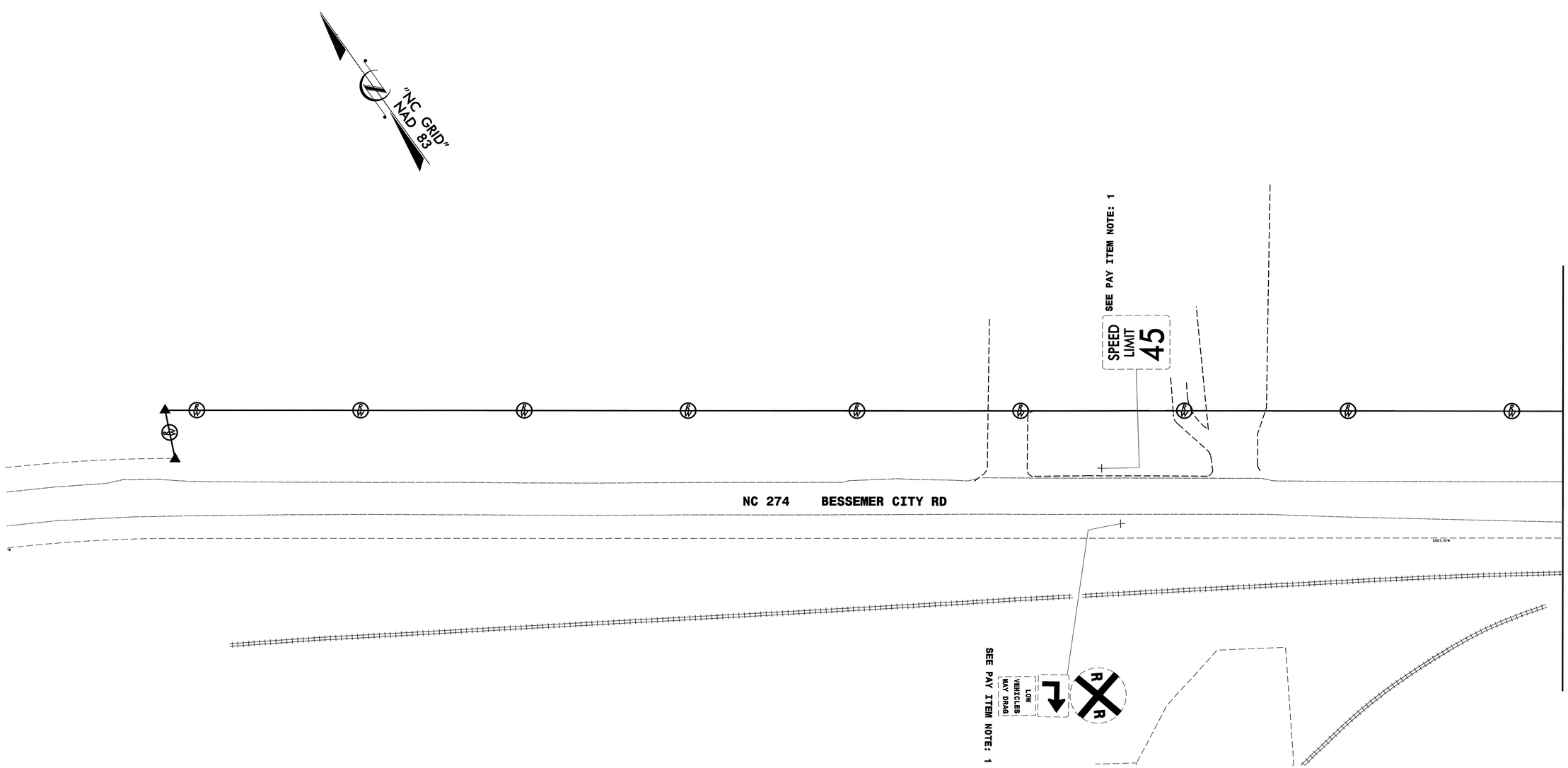

APPROVED:_____ DATE:_____

NORTH CAROLINA SEAL 20104 ENGINEER SEIDEN S. ASEFNIA

8-10-04

SEPI ENGINEERING GROUP
2300 Rexwoods Drive
Suite 370
Raleigh, NC 27607
Tel:919-789-9977 Fax:789-9591

NC 274 BESSEMER CITY RD
EXISTING SIGNS

SCALE:	NONE
DATE:	8-04
DWG. BY:	CEK
DESIGN BY:	RCD
REVIEWED BY:	SSA

N. C. DEPARTMENT OF TRANSPORTATION
DIVISION OF HIGHWAYS
TRAFFIC ENGINEERING BRANCH

REVISIONS

CADD FILE

$$$$$SYSTIME$$$$
$$$$$USERNAME$$$$
$$$$$USERNAME$$$$
$$$$$USERNAME$$$$

METRIC	PROJECT REFERENCE NO.	SHEET NO.
	U-2408	SIGN 22

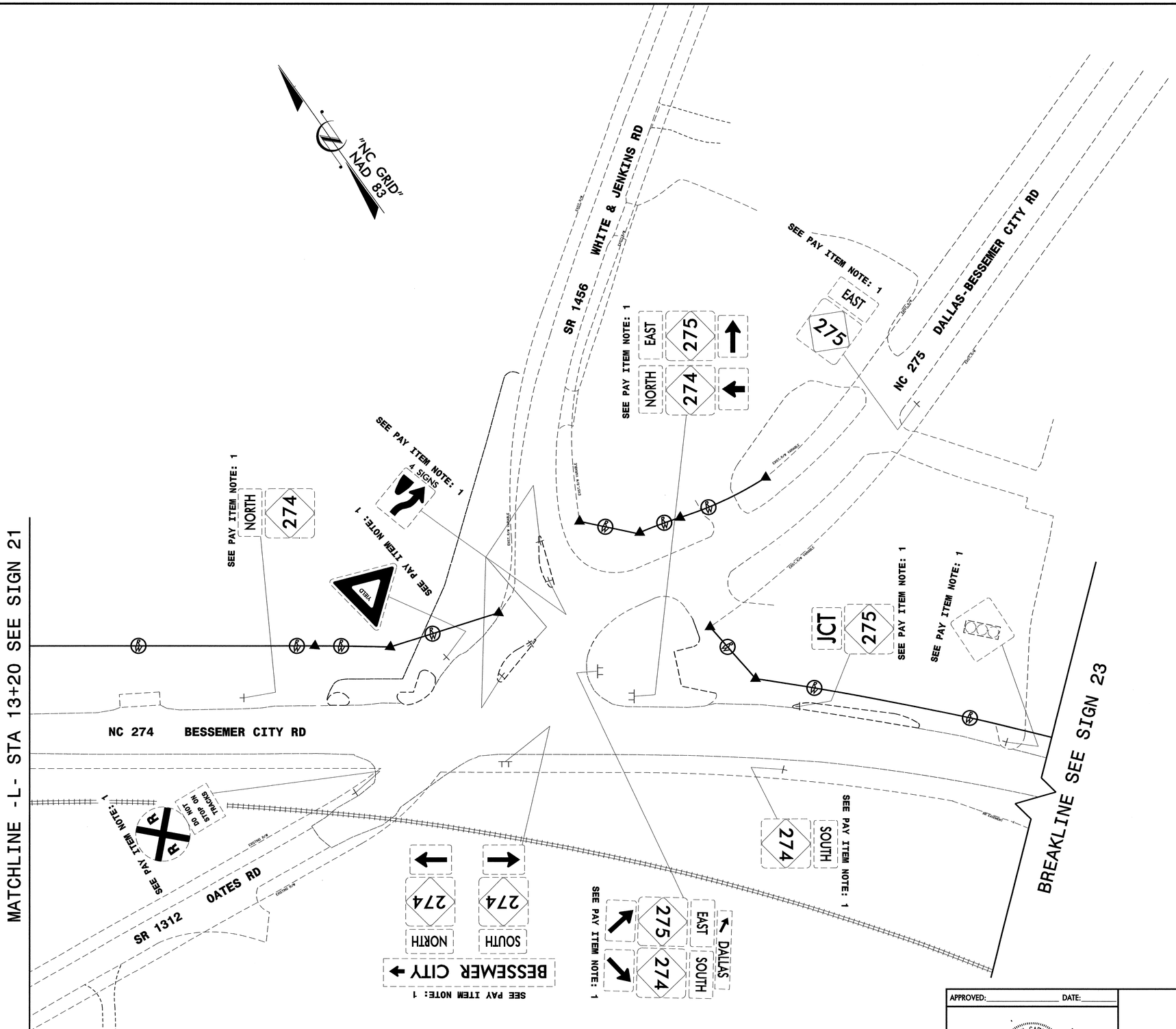

SEPI ENGINEERING GROUP
2300 Rexwoods Drive
Suite 370
Raleigh, NC 27607
Tel:919-789-9977 Fax:789-9591

APPROVED:_____ DATE:_____

NORTH CAROLINA SEAL 20104 ENGINEER SEPIDEH S. ASLEMAN

8-10-04

NC 274 BESSEMER CITY RD
EXISTING SIGNS

SCALE:	NONE	N. C. DEPARTMENT OF TRANSPORTATION DIVISION OF HIGHWAYS TRAFFIC ENGINEERING BRANCH
DATE:	8-04	
DWG. BY:	CEK	
DESIGN BY:	RCD	
REVIEWED BY:	SSA	

REVISIONS

CADD FILE

METRIC	PROJECT REFERENCE NO.	SHEET NO.
	U-2408	SIGN 23

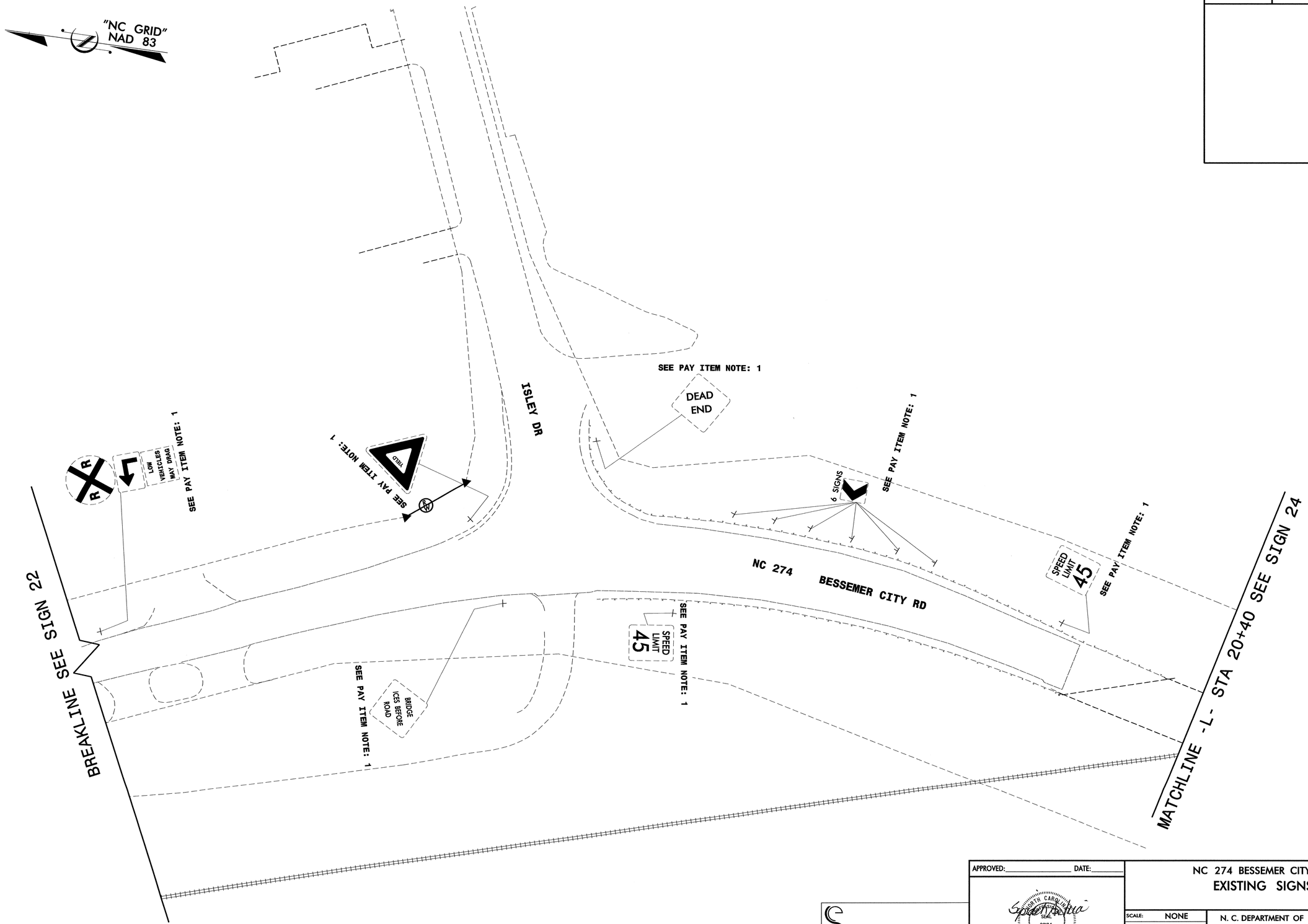

SEPI ENGINEERING GROUP
2300 Rexwoods Drive
Suite 370
Raleigh, NC 27607
Tel:919-789-9977 Fax:789-9591

APPROVED:_____ DATE:_____

NORTH CAROLINA PROFESSIONAL SEAL 20104 ENGINEER SEPIDEH S. ASEFNIA

8-10-04

NC 274 BESSEMER CITY RD
EXISTING SIGNS

SCALE:	NONE
DATE:	8-04
DWG. BY:	CEK
DESIGN BY:	RCD
REVIEWED BY:	SSA

N. C. DEPARTMENT OF TRANSPORTATION
DIVISION OF HIGHWAYS
TRAFFIC ENGINEERING BRANCH

REVISIONS

CADD FILE

METRIC	PROJECT REFERENCE NO.	SHEET NO.
	U-2408	SIGN 24

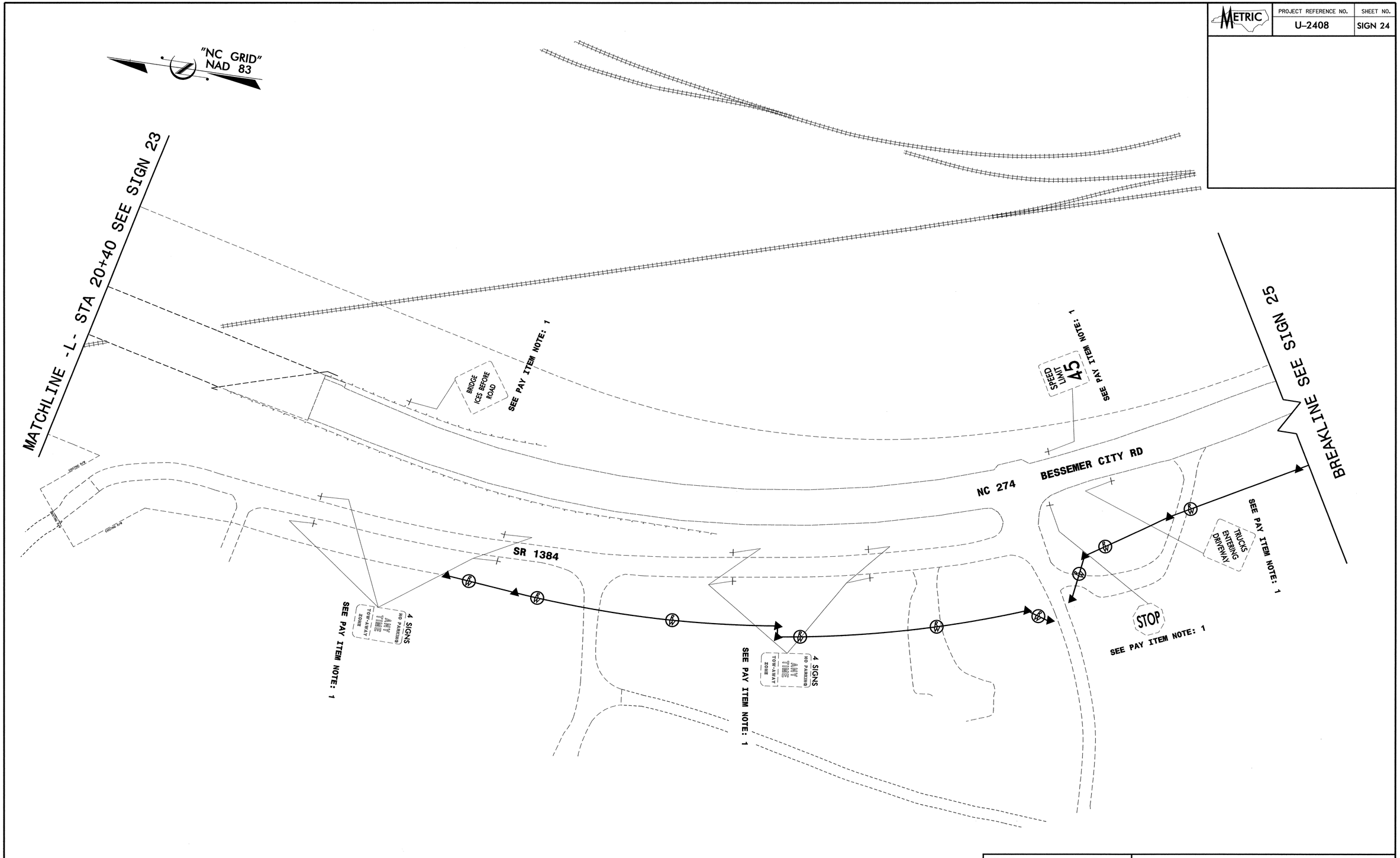

APPROVED:_____ DATE:_____

SEPI ENGINEERING GROUP
2300 Rexwoods Drive
Suite 370
Raleigh, NC 27607
Tel:919-789-9977 Fax:789-9591

SEAL 20104 ENGINEER SERGEY S. ASEFNIA
8-10-04

NC 274 BESSEMER CITY RD
EXISTING SIGNS

SCALE:	NONE
DATE:	8-04
DWG. BY:	CEK
DESIGN BY:	RCD
REVIEWED BY:	SSA

N. C. DEPARTMENT OF TRANSPORTATION
DIVISION OF HIGHWAYS
TRAFFIC ENGINEERING BRANCH

REVISIONS

CADD FILE

$$$$USTM$$$$
$$$$USTM$$$$DGN$$$$
$$$$USERNAME$$$$

METRIC	PROJECT REFERENCE NO.	SHEET NO.
	U-2408	SIGN 25

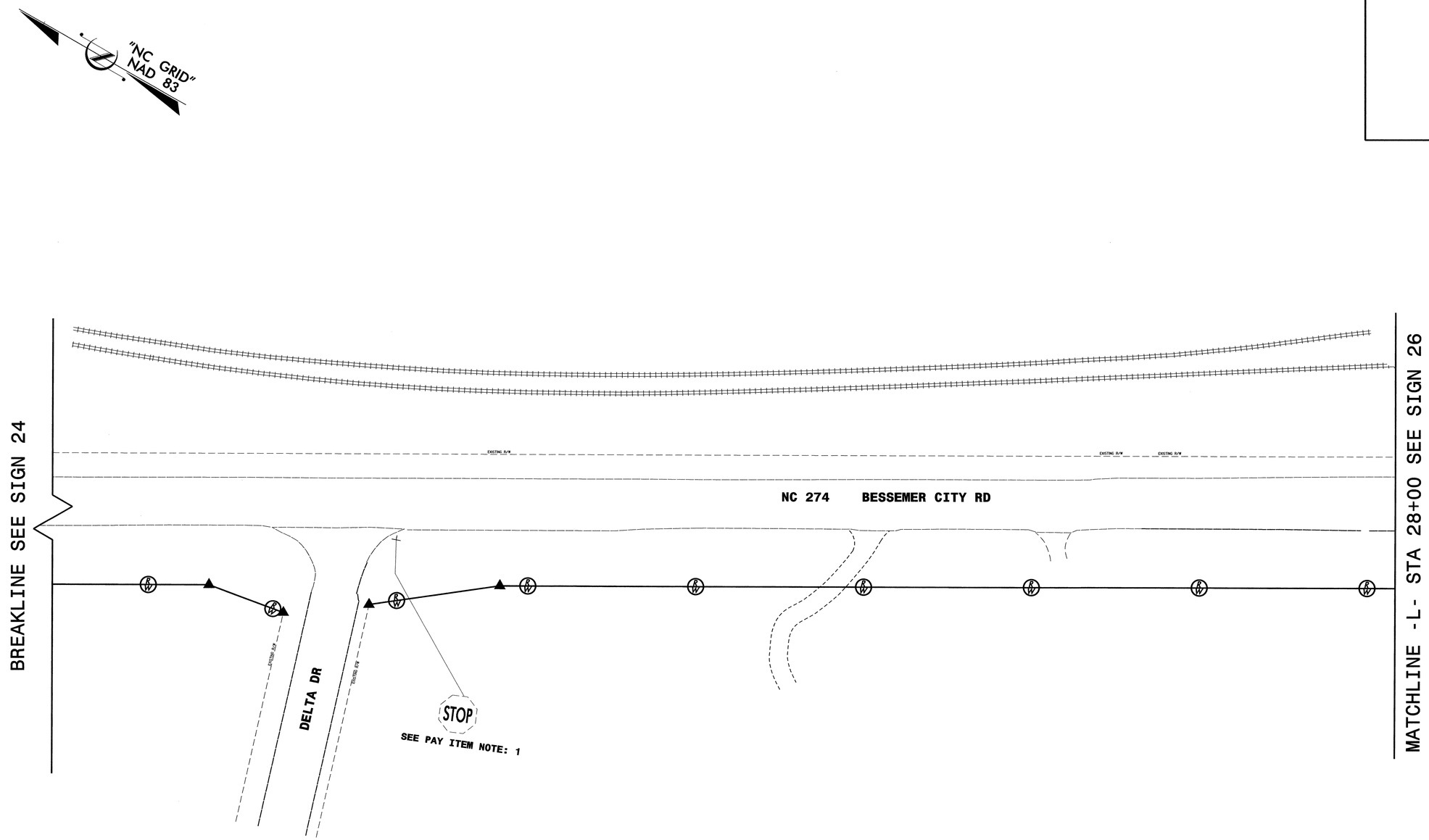

SEPI ENGINEERING GROUP
2300 Rexwoods Drive
Suite 370
Raleigh, NC 27607
Tel:919-789-9977 Fax:789-9591

APPROVED:_____ DATE:_____

NORTH CAROLINA SEAL 20104 ENGINEER SERDEN S. ASEFNIA

8-10-04

NC 274 BESSEMER CITY RD
EXISTING SIGNS

SCALE:	NONE
DATE:	8-04
DWG. BY:	CEK
DESIGN BY:	RCD
REVIEWED BY:	SSA

N. C. DEPARTMENT OF TRANSPORTATION
DIVISION OF HIGHWAYS
TRAFFIC ENGINEERING BRANCH

REVISIONS

CADD FILE

METRIC	PROJECT REFERENCE NO.	SHEET NO.
	U-2408	SIGN 26

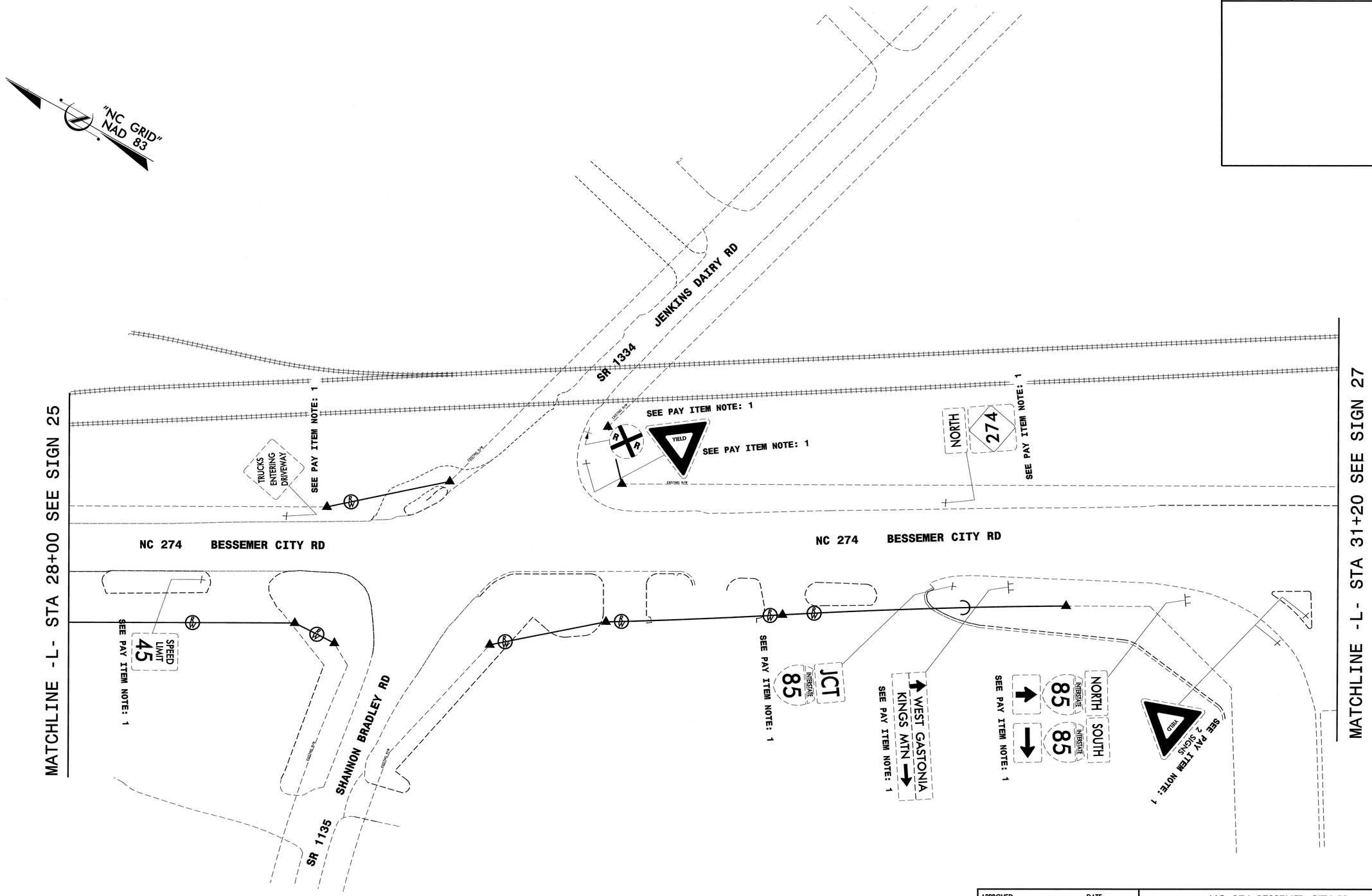

APPROVED:_____ DATE:_____

NORTH CAROLINA SEAL 20104 ENGINEER SERGIO S. ASCENIO

8-10-04

SEPI ENGINEERING GROUP
2300 Rexwoods Drive
Suite 370
Raleigh, NC 27607
Tel:919-789-9977 Fax:789-9591

NC 274 BESSEMER CITY RD
EXISTING SIGNS

SCALE:	NONE
DATE:	8-04
DWG. BY:	CEK
DESIGN BY:	RCD
REVIEWED BY:	SSA

N. C. DEPARTMENT OF TRANSPORTATION
DIVISION OF HIGHWAYS
TRAFFIC ENGINEERING BRANCH

REVISIONS

CADD FILE

$$$$$SYSTIME$$$$$
$$$$$SYSTIME$$$$$
$$$$$SYSTIME$$$$$
$$$$$SYSTIME$$$$$

$$$$$$SYSTIME$$$$$
$$$$$$$$$$$$$$$$$DGN$$$$$$$$$$$$$$$$$
$$$$USERNAME$$$$

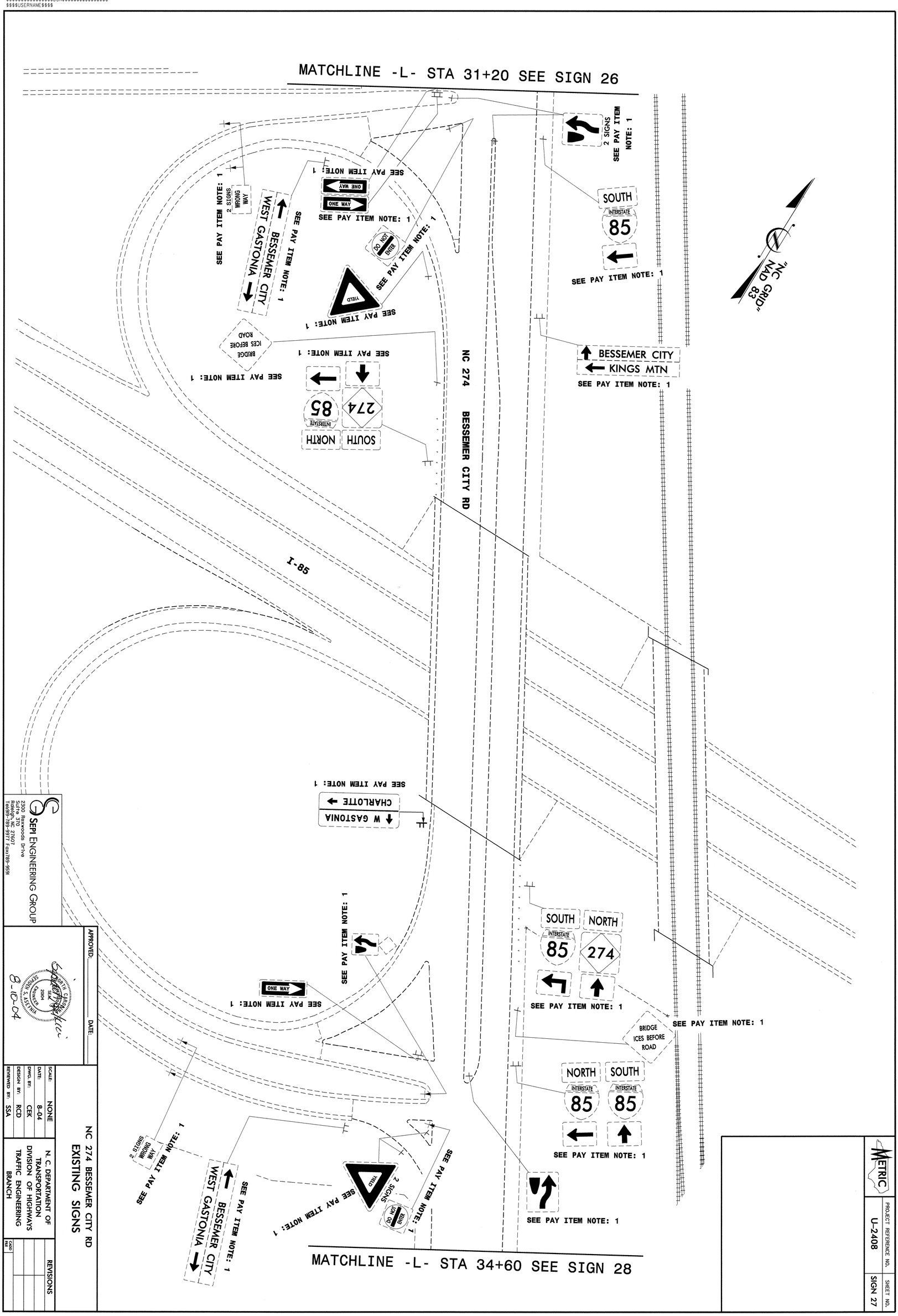

SEPI ENGINEERING GROUP
2300 Rexwoods Drive
Suite 370
Raleigh, NC 27607
Tel:919-789-9977 Fax:789-9591

APPROVED: DATE:

NORTH CAROLINA SEAL 20604 ENGINEER S. ASEFIAN
8-10-04

NC 274 BESSEMER CITY RD
EXISTING SIGNS

SCALE:	NONE
DATE:	8-04
DWG. BY:	CEK
DESIGN BY:	RCD
REVIEWED BY:	SSA

N. C. DEPARTMENT OF TRANSPORTATION
DIVISION OF HIGHWAYS
TRAFFIC ENGINEERING BRANCH

REVISIONS

CADD FILE

METRIC

PROJECT REFERENCE NO. U-2408

SHEET NO. SIGN 27

METRIC	PROJECT REFERENCE NO.	SHEET NO.
	U-2408	SIGN 28

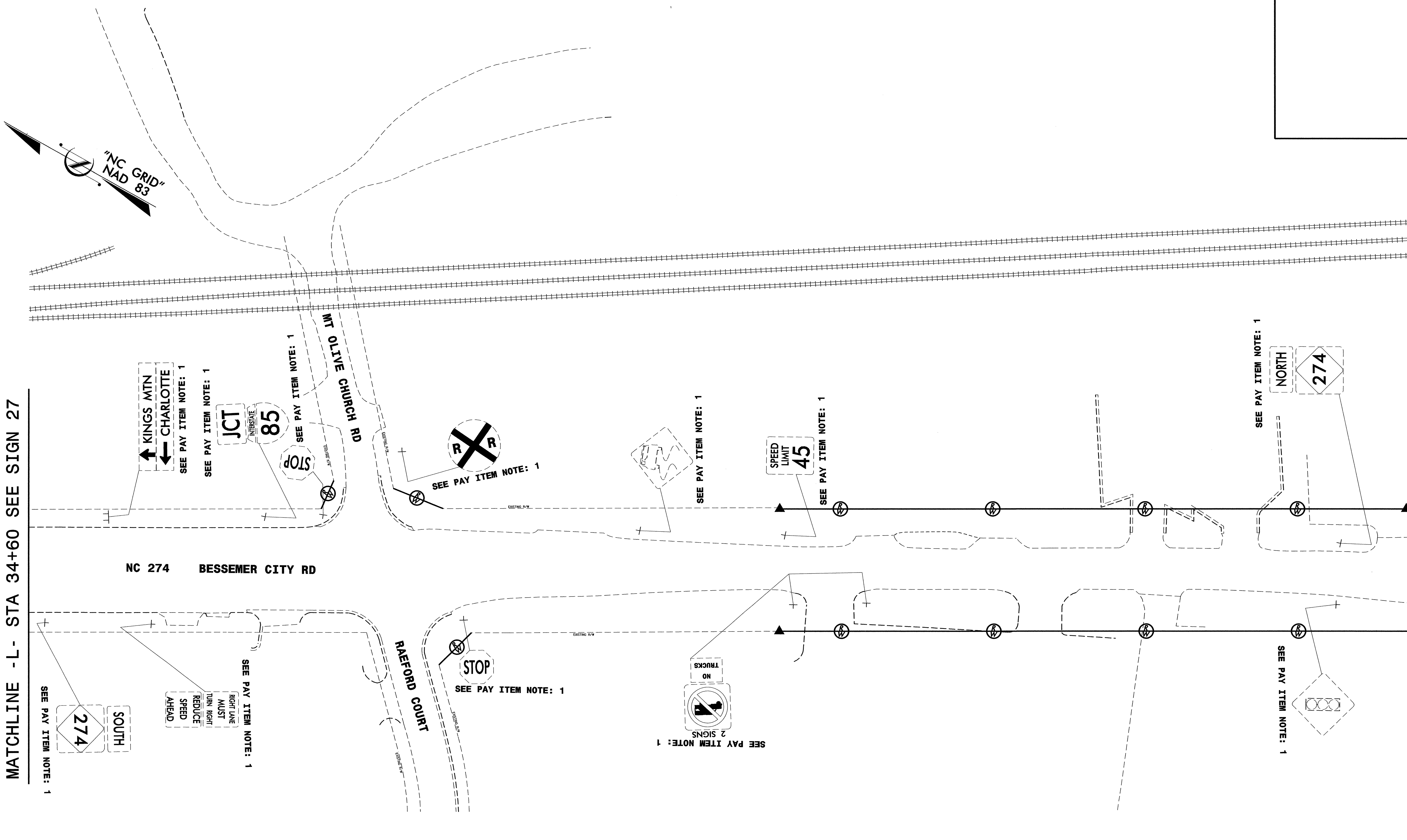

SEPI ENGINEERING GROUP
2300 Rexwoods Drive
Suite 370
Raleigh, NC 27607
Tel:919-789-9977 Fax:789-9591

APPROVED:________________ DATE:________

NORTH CAROLINA PROFESSIONAL SEAL 20104 ENGINEER SEPIDEH S. ASEFNIA
8-10-04

NC 274 BESSEMER CITY RD
EXISTING SIGNS

SCALE:	NONE
DATE:	8-04
DWG. BY:	CEK
DESIGN BY:	RCD
REVIEWED BY:	SSA

N. C. DEPARTMENT OF TRANSPORTATION
DIVISION OF HIGHWAYS
TRAFFIC ENGINEERING BRANCH

REVISIONS

CADD FILE

$$$$$$SYSTIME$$$$$
$$$$$$$$$$$$$$$$DGN$$$$$$$$$$$$$$$$$$
$$$$USERNAME$$$$

METRIC	PROJECT REFERENCE NO.	SHEET NO.
	U-2408	SIGN 29

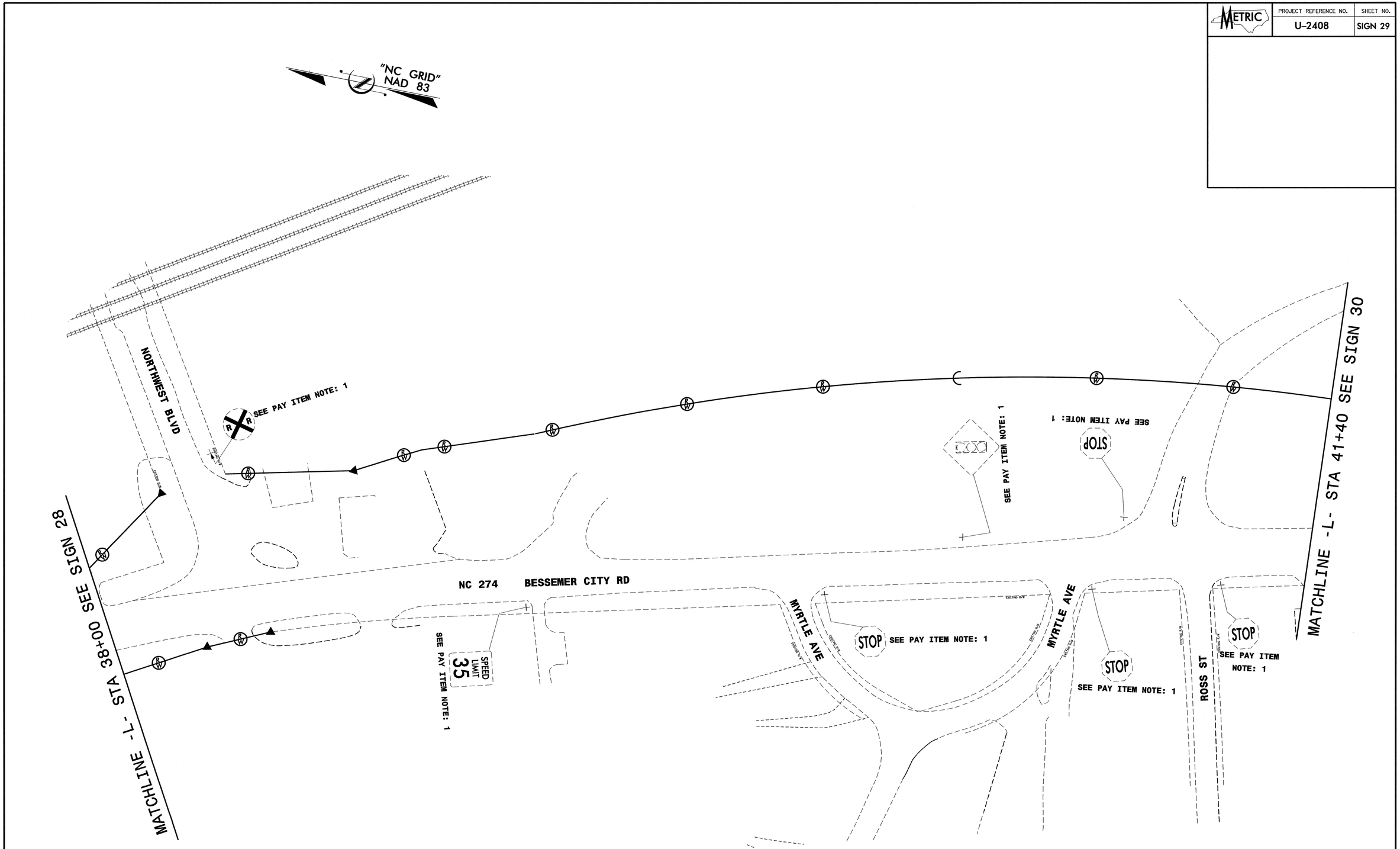

SEPI ENGINEERING GROUP
2300 Rexwoods Drive
Suite 370
Raleigh, NC 27607
Tel:919-789-9977 Fax:789-9591

APPROVED:_____ DATE:_____

NORTH CAROLINA PROFESSIONAL ENGINEER 20104 SEPIDEH S. ASEFNIA

8-10-04

NC 274 BESSEMER CITY RD
EXISTING SIGNS

SCALE:	NONE
DATE:	8-04
DWG. BY:	CEK
DESIGN BY:	RCD
REVIEWED BY:	SSA

N. C. DEPARTMENT OF TRANSPORTATION
DIVISION OF HIGHWAYS
TRAFFIC ENGINEERING BRANCH

REVISIONS

CADD FILE

METRIC	PROJECT REFERENCE NO.	SHEET NO.
	U-2408	SIGN 30

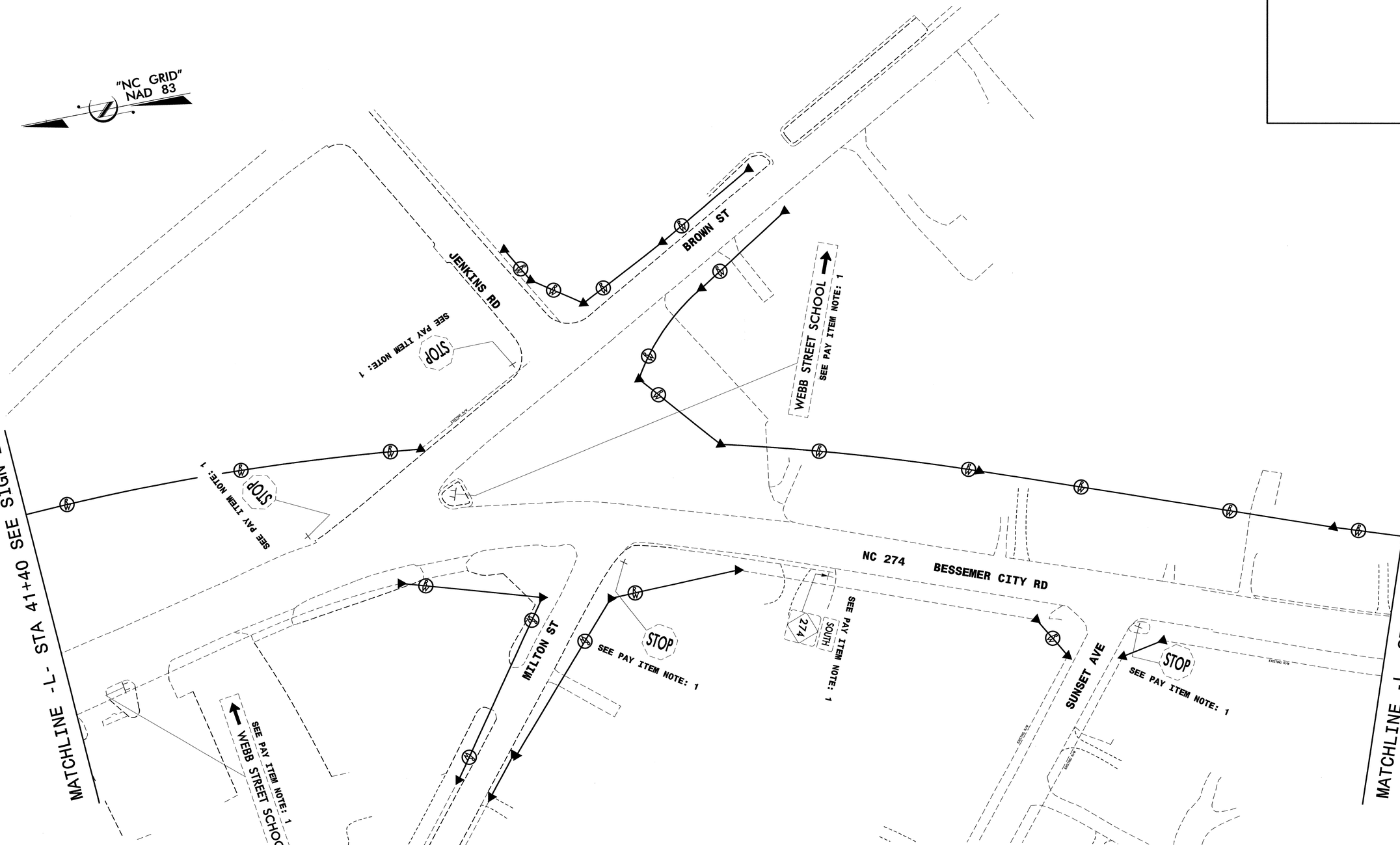

SEPI ENGINEERING GROUP
2300 Rexwoods Drive
Suite 370
Raleigh, NC 27607
Tel:919-789-9977 Fax:789-9591

APPROVED:_____ DATE:_____

SOUTH CAROLINA PROFESSIONAL SEAL 20104 ENGINEER SEPIDEH S. ASEFNIA
8-10-04

NC 274 BESSEMER CITY RD
EXISTING SIGNS

SCALE:	NONE
DATE:	8-04
DWG. BY:	CEK
DESIGN BY:	RCD
REVIEWED BY:	SSA

N. C. DEPARTMENT OF TRANSPORTATION
DIVISION OF HIGHWAYS
TRAFFIC ENGINEERING BRANCH

REVISIONS

CADD FILE

METRIC	PROJECT REFERENCE NO.	SHEET NO.
	U-2408	SIGN 31

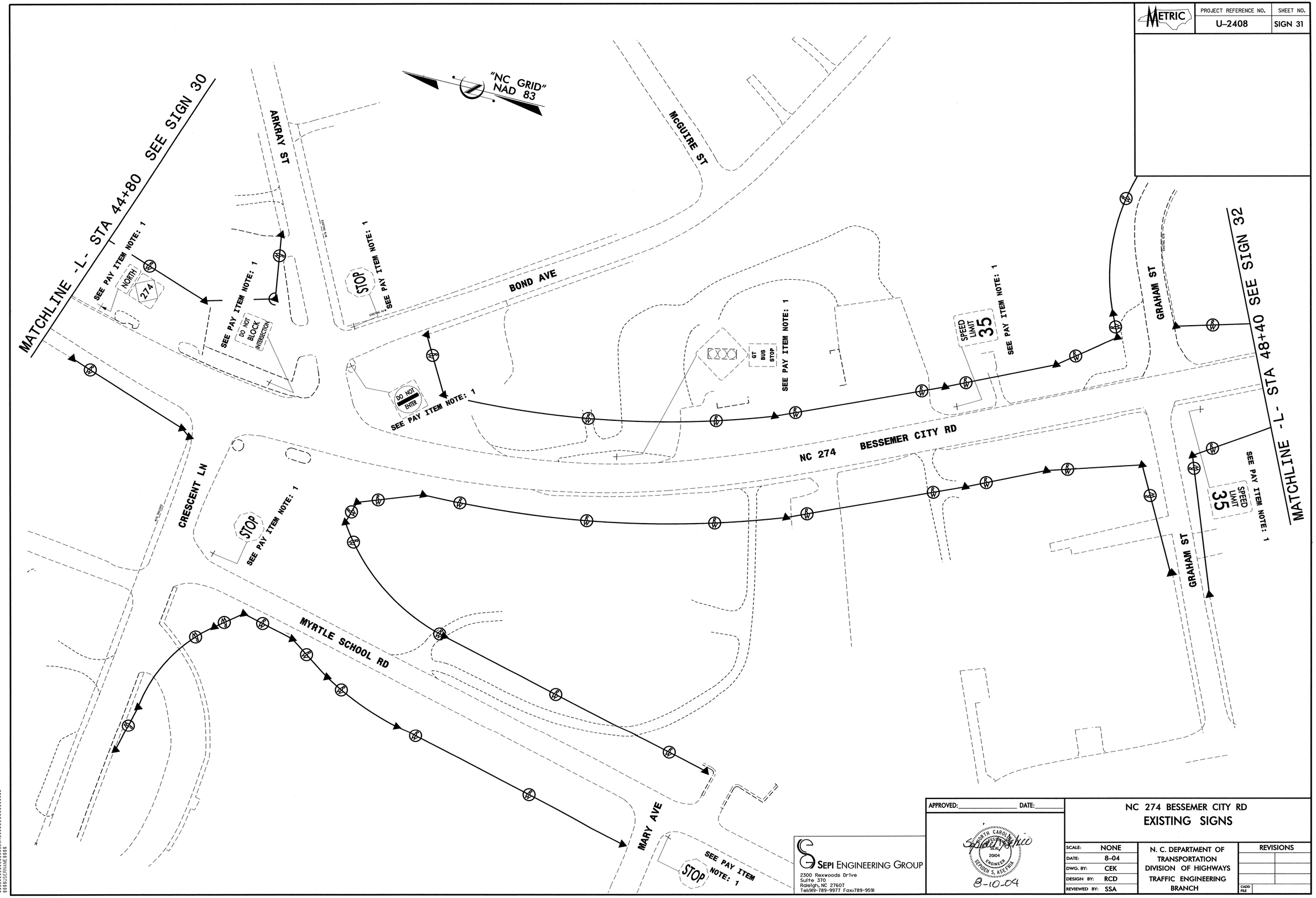

SEPI ENGINEERING GROUP
2300 Rexwoods Drive
Suite 370
Raleigh, NC 27607
Tel:919-789-9977 Fax:789-9591

APPROVED:_____ DATE:_____

NORTH CAROLINA PROFESSIONAL ENGINEER SEAL 20104 SERVEH S. ASELNIA

8-10-04

NC 274 BESSEMER CITY RD
EXISTING SIGNS

SCALE:	NONE
DATE:	8-04
DWG. BY:	CEK
DESIGN BY:	RCD
REVIEWED BY:	SSA

N. C. DEPARTMENT OF TRANSPORTATION
DIVISION OF HIGHWAYS
TRAFFIC ENGINEERING BRANCH

REVISIONS

CADD FILE

METRIC	PROJECT REFERENCE NO.	SHEET NO.
	U-2408	SIGN 32

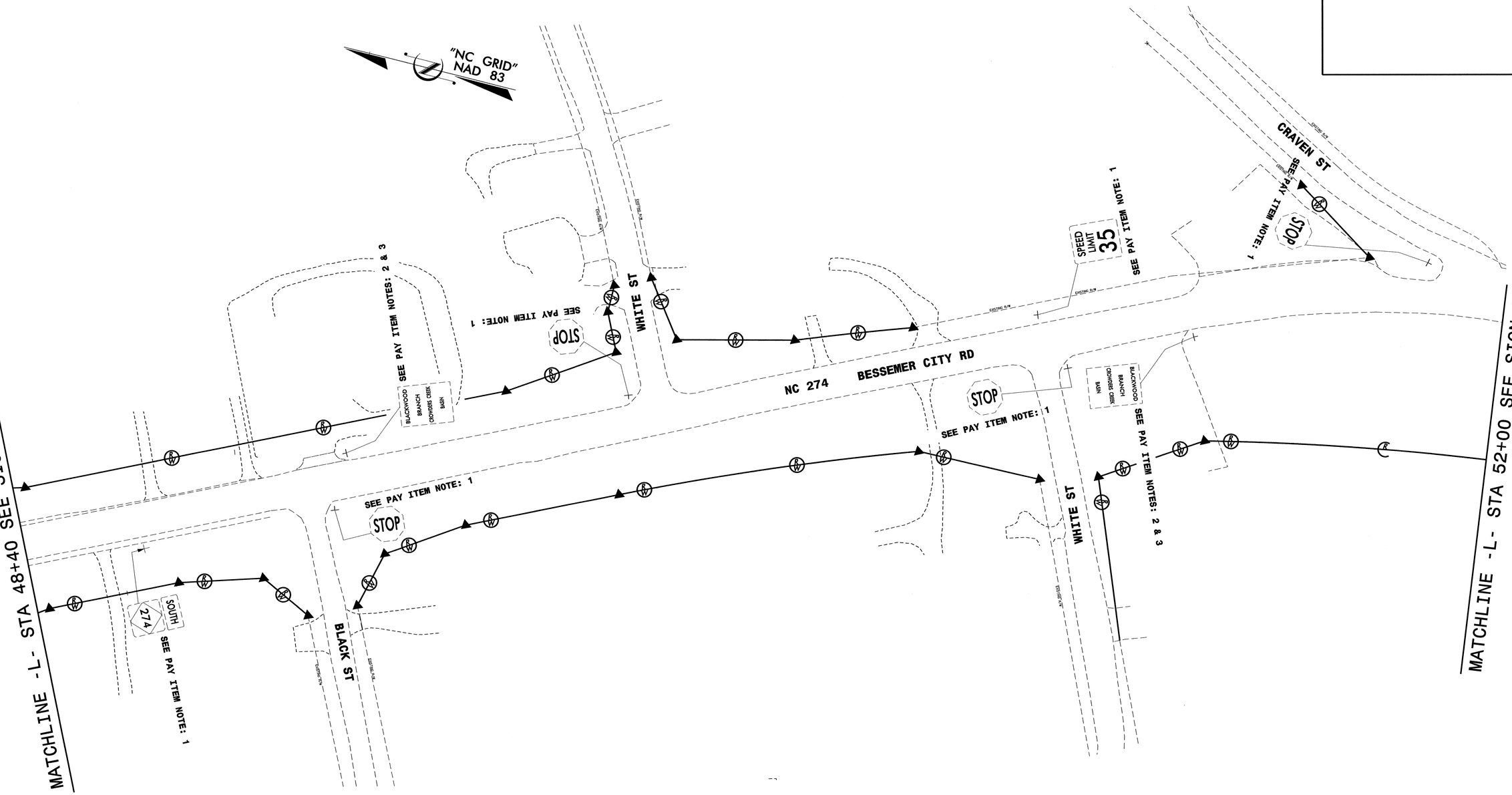

SEPI ENGINEERING GROUP
2300 Rexwoods Drive
Suite 370
Raleigh, NC 27607
Tel:919-789-9977 Fax:789-9591

APPROVED:_____ DATE:_____

NORTH CAROLINA PROFESSIONAL SEAL 20104 ENGINEER SEPEHR S. ASEENA

8-10-04

NC 274 BESSEMER CITY RD
EXISTING SIGNS

SCALE:	NONE
DATE:	8-04
DWG. BY:	CEK
DESIGN BY:	RCD
REVIEWED BY:	SSA

N. C. DEPARTMENT OF TRANSPORTATION
DIVISION OF HIGHWAYS
TRAFFIC ENGINEERING BRANCH

REVISIONS

CADD FILE

$$$$SYSTIME$$$$
$$$$USERNAME$$$$
$$$$DGN$$$$

METRIC	PROJECT REFERENCE NO.	SHEET NO.
	U-2408	SIGN 33

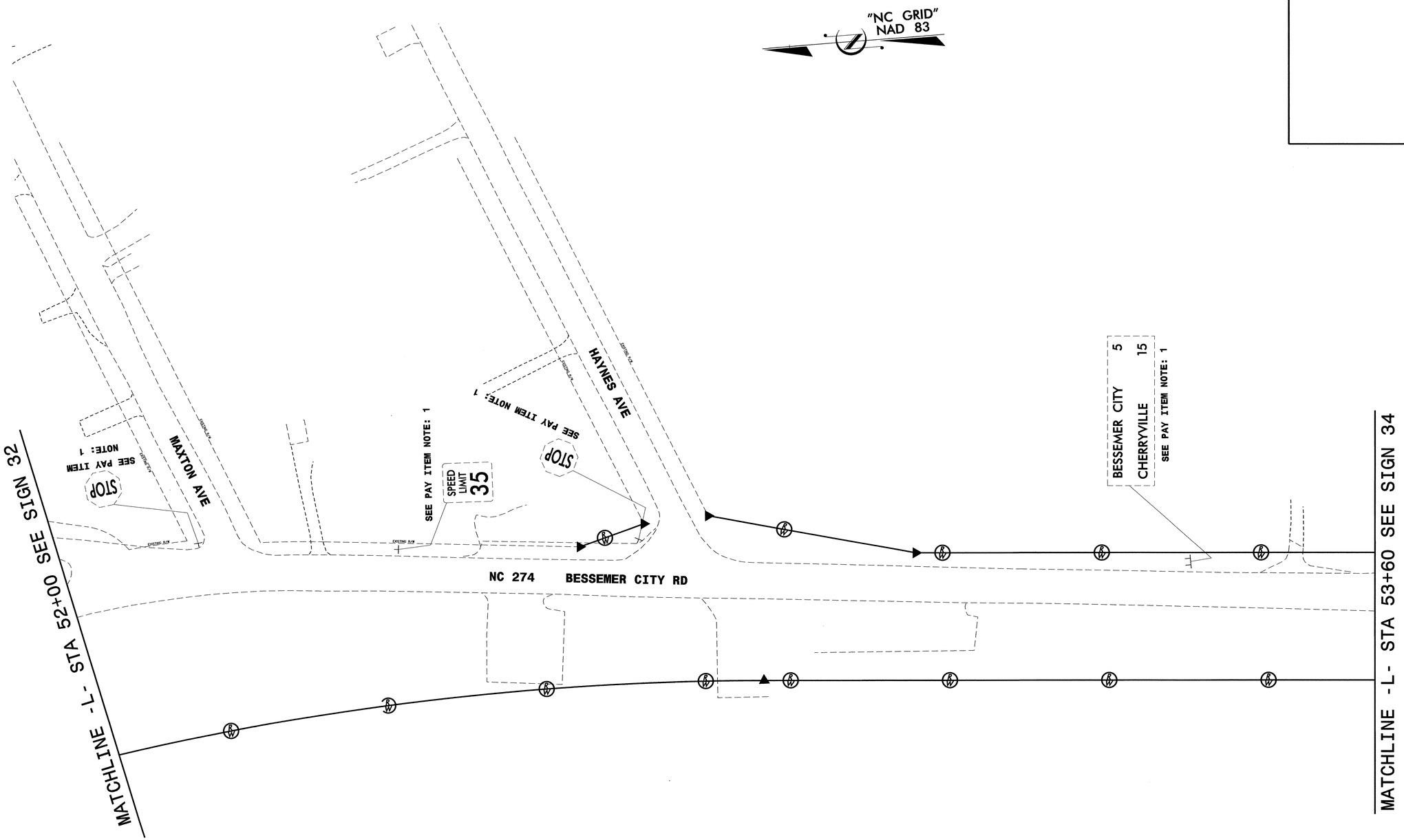

APPROVED:_____ DATE:_____

NC 274 BESSEMER CITY RD
EXISTING SIGNS

SEPI ENGINEERING GROUP
2300 Rexwoods Drive
Suite 370
Raleigh, NC 27607
Tel:919-789-9977 Fax:789-9591

NORTH CAROLINA PROFESSIONAL ENGINEER SEAL 20104 SEPEHR S. ASEFNIA
8-10-04

SCALE:	NONE
DATE:	8-04
DWG. BY:	CEK
DESIGN BY:	RCD
REVIEWED BY:	SSA

N. C. DEPARTMENT OF TRANSPORTATION
DIVISION OF HIGHWAYS
TRAFFIC ENGINEERING BRANCH

REVISIONS

CADD FILE

$$$$$SYSTIME$$$$$
$$$$$USERNAME$$$$$

METRIC	PROJECT REFERENCE NO.	SHEET NO.
	U-2408	SIGN 34

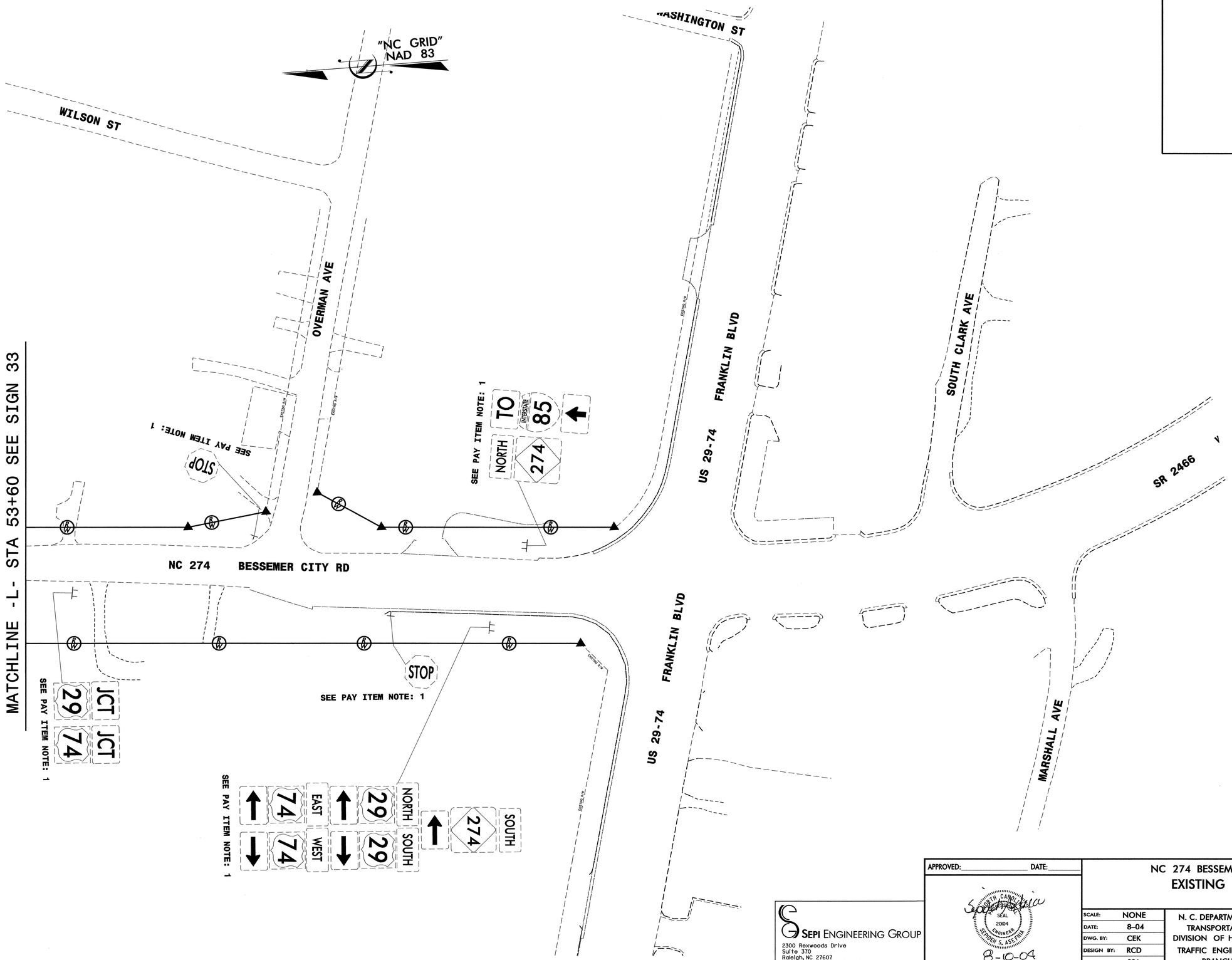

SEPI ENGINEERING GROUP
2300 Rexwoods Drive
Suite 370
Raleigh, NC 27607
Tel:919-789-9977 Fax:789-9591

APPROVED:_____ DATE:_____

NORTH CAROLINA PROFESSIONAL SEAL 20104 ENGINEER SERGIO S. ASENJO

8-10-04

NC 274 BESSEMER CITY RD

EXISTING SIGNS

SCALE:	NONE
DATE:	8-04
DWG. BY:	CEK
DESIGN BY:	RCD
REVIEWED BY:	SSA

N. C. DEPARTMENT OF TRANSPORTATION
DIVISION OF HIGHWAYS
TRAFFIC ENGINEERING BRANCH

REVISIONS

CADD FILE

$$$$SYSTIME$$$$
$$$$USERNAME$$$$
$$$$DGNFILE$$$$

T.I.P. PROJECT: U-2408

STATE OF NORTH CAROLINA
DIVISION OF HIGHWAYS

GASTON COUNTY

STATE	STATE PROJECT REFERENCE NO.	SHEET NO.	TOTAL SHEETS
N.C.	U-2408	SIG-1	93

STATE PROJ. NO.	F.A. PROJ. NO.	DESCRIPTION

METRIC

ALL DIMENSIONS IN THESE PLANS ARE IN METERS

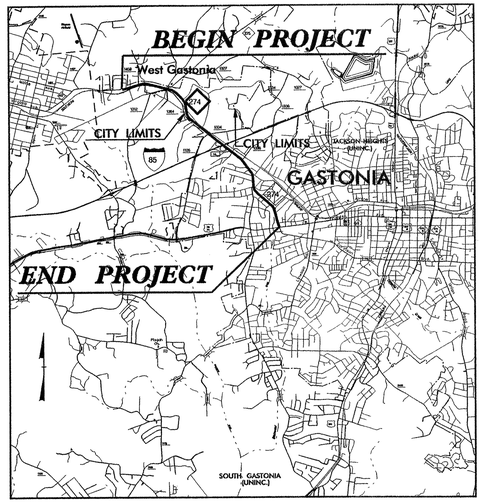

VICINITY MAP

LOCATION: NC 274 (BESSEMER CITY ROAD) FROM NC 275 (DALLAS-BESSEMER CITY ROAD TO US 29-74 (FRANKLIN BOULEVARD)

TYPE OF WORK: TRAFFIC SIGNALS AND COMMUNICATIONS CABLE ROUTING

"NC GRID" NAD 83

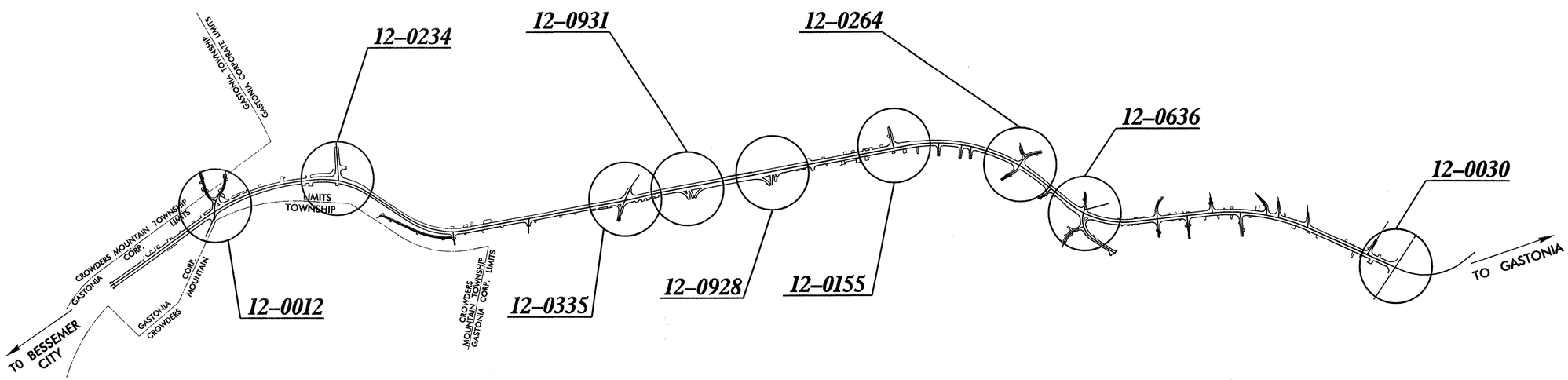

Prepared In the Office of:

THE LPA GROUP
TRANSPORTATION CONSULTANTS

THE LPA GROUP of North Carolina, p.a.
4904 Professional Court, Suite 201
Raleigh, North Carolina 27609

JEFF DOUGLAS, P.E. – PROJECT MANAGER
ROB DUBNICKA, PE – SENIOR TRAFFIC ENGINEER

INDEX OF PLANS

SHEET NUMBER	SIGNAL INVENTORY NUMBER	LOCATION /DESCRIPTION
SIG- 1		TITLE SHEET
SIG- 2-11	12-0012	NC 274 (BESSEMER CITY ROAD) AT NC 275 (DALLAS-BESSEMER CITY ROAD) AND SR 1312 (OATES ROAD)
SIG-12-17	12-0234	NC 274 (BESSEMER CITY ROAD) AT SR 1351 (ISLEY DRIVE)
SIG-18-26	12-0335	NC 274 (BESSEMER CITY ROAD) AT SR 1334 (JENKINS DAIRY ROAD) AND SR 1135 (SHANNON BRADLEY ROAD)
SIG-27-31	12-0931	NC 274 (BESSEMER CITY ROAD) AT I-85 SOUTHBOUND RAMP AND LOOP
SIG-32-36	12-0928	NC 274 (BESSEMER CITY ROAD) AT I-85 NORTHBOUND RAMP AND LOOP
SIG-37-45	12-0155	NC 274 (BESSEMER CITY ROAD) AT SR 1338 (NORTHWEST BOULEVARD)
SIG-46-47	12-0264	NC 274 (BESSEMER CITY ROAD) AT BROWN STREET AND MILTON STREET
SIG-48-53	12-0636	NC 274 (BESSEMER CITY ROAD) AT ARKRAY STREET AND MYRTLE SCHOOL ROAD
SIG- 54-55	12-0030	US 29-74 (FRANKLIN BOULEVARD) AT NC 274 (BESSEMER CITY ROAD) AND SR 2466 (GARRISON BOULEVARD)
SIG- 56-74	N/A	METAL POLE TYPICALS
SIG- 75	N/A	2070L CABINET TYPICALS
SIG- 76-93	N/A	COMMUNICATION CABLE ROUTING PLANS

LEGEND:

SIGNAL INVENTORY NUMBER

NCDOT CONTACTS:

TRAFFIC ENGINEERING AND SAFETY SYSTEMS BRANCH
RICHARD E. MULLINAX, PE - SIGNALS AND GEOMETRICS ENGINEER
D. Y. ISHAK - SIGNALS AND GEOMETRICS CONTRACTS ENGINEER
G.G. (BUDDY) MURR, PE - TRAFFIC MANAGEMENT SYSTEMS ENGINEER
GEORGE C. BROWN, PE - SIGNAL EQUIPMENT DESIGN ENGINEER

DIVISION 12 GASTON COUNTY

REVISIONS	INIT.	DATE

N.C. DEPARTMENT of TRANSPORTATION
DIVISION of HIGHWAYS
TRAFFIC ENGINEERING BRANCH

SEAL

NORTH CAROLINA PROFESSIONAL SEAL 027742 ENGINEER ROBERT J. DUBNICKA

SIGNATURE 8-9-04 DATE

SCALE: NONE DATE:
PREPARED BY: PATRICK DYER
REVIEWED BY: ROBERT DUBNICKA, P.E.
REVIEWED BY:
S/G INV. NO.

9/09/99

08-AUG-2004 13:48
Y:\Traffic\U2408\Signal Plans\SIG-TITLE.dgn
rdubnicka

METRIC	PROJECT REFERENCE NO.	SHEET NO.
	U-2408	SIG. 2

4 PHASE SEMI ACTUATED RAILROAD PREEMPTION ISOLATED

PHASING DIAGRAM

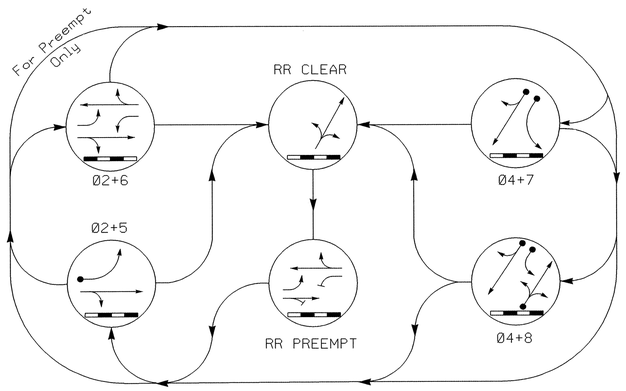

PHASING DIAGRAM DETECTION LEGEND

- DETECTED MOVEMENT
- UNDETECTED MOVEMENT (OVERLAP)
- UNSIGNALIZED MOVEMENT
- PEDESTRIAN MOVEMENT

TABLE OF OPERATION

SIGNAL FACE	PHASE Ø2+5	Ø2+6	Ø4+7	Ø4+8	RR CLEAR	RR PREEMPT	FLASH
21	G	G	R	R	R	G	Y
22	G	G	R	R	R	G	Y
41	R	R	G	G	R	R	R
42	R	R	G	G	R	R	R
61,62	R	G	R	R	R	G	Y
81	R	R	R	G	G	R	R
82	R	R	R	G	G	R	R
SIGN Ⓑ	OFF	OFF	OFF	OFF	ON	ON	*
SIGN Ⓒ	OFF	OFF	OFF	OFF	ON	ON	*

* - SEE NOTE 6

SIGNAL FACE I.D.

Denotes L.E.D.

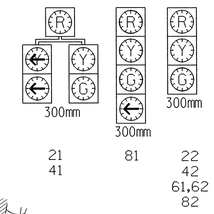

PLAN QUANTITIES

Pay Item	Meters
Signal Cable	480
Messenger Cable	165
Loop Lead-in Cable	390

NOTES

1. Refer to "Roadway Standard Drawings NCDOT" dated January 2002 and "Standard Specifications for Roads and Structures" dated January 2002.
2. Omit Phase 5 during Phase 6 on.
3. Omit Phase 7 during Phase 8 on.
4. Program controller to clear from phase 2+6 to phase 2+5 by progressing through phase 4+8 (see Electrical Details).
5. Set all detector units to presence mode.
6. Ensure flashing operation does not alter operation of blankout signs.
7. This location contains railroad preemption phasing. Do not program signal for late night flashing operation.

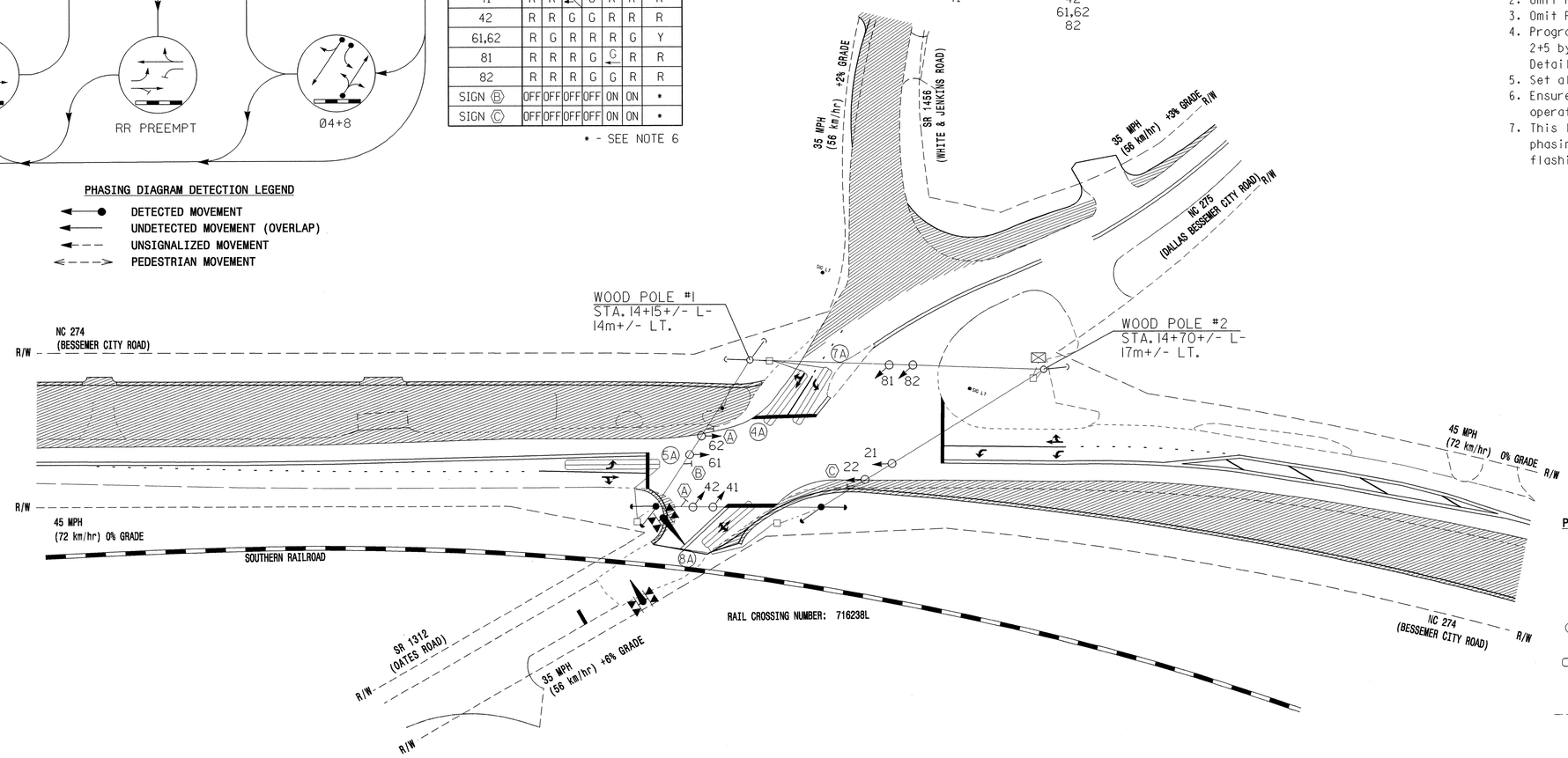

LEGEND

PROPOSED		EXISTING
	Traffic Signal Head	
	Modified Signal Head	N/A
	Sign	
	Pedestrian Signal Head With Push Button & Sign	
	Signal Pole with Guy	
	Signal Pole with Sidewalk Guy	
	Inductive Loop Detector	
	Controller & Cabinet	
	Junction Box	
	50mm Underground Conduit	
N/A	Right of Way with Marker	
	Directional Arrow	
	Pavement Marking Arrow	
N/A	Railroad Gate and Flasher	
N/A	Railroad Tracks	
Ⓐ	"NO TURN ON RED" Sign (R10-11A)	Ⓐ
Ⓑ	"NO LEFT TURN - TRAIN" LED Blankout Sign	Ⓑ
Ⓒ	"NO RIGHT TURN - TRAIN" LED Blankout Sign	Ⓒ
	Construction Zone	

2070L TIMING CHART

FEATURE	PHASE 2	4	5	6	7	8
Min Green 1 *	12	7	7	12	7	7
Extension 1 *	0.0	1.0	1.0	0.0	1.0	1.0
Max Green 1 *	45	20	15	45	15	20
Yellow Clearance	4.7	4.0	4.0	4.7	4.0	4.0
Red Clearance	2.5	1.5	3.0	2.5	1.0	1.5
Walk 1 *	-	-	-	-	-	-
Don't Walk 1	-	-	-	-	-	-
Seconds Per Actuation *	-	-	-	-	-	-
Max Variable Initial *	-	-	-	-	-	-
Time Before Reduction *	-	-	-	-	-	-
Time To Reduce *	-	-	-	-	-	-
Minimum Gap	-	-	-	-	-	-
Recall Mode	MAX RECALL	-	-	MAX RECALL	-	-
Vehicle Call Memory	YELLOW	-	-	YELLOW	-	-
Dual Entry	-	ON	-	-	-	ON
Simultaneous Gap	ON	ON	ON	ON	ON	ON

* These values may be field adjusted. Do not adjust Min Green and Extension times for phases 2 and 6 lower than what is shown. Min Green for all other phases should not be lower than 4 seconds.

2070 RAIL PREEMPTION

Interval 1 – Track Clearance Green	18
Interval 1 – Track Clearance Yellow	4.0
Interval 1 – Track Clearance Red	1.5
Interval 2 – Dwell Green	255
Interval 2 – Dwell Yellow	0.0*
Interval 2 – Dwell Red	0.0*
Interval 5 – Exit Green	0
Interval 5 – Exit Yellow	0.0*
Interval 5 – Exit Red	0.0*
Delay Time	0
Min Green Before Pre	1
Ped Clear Before Pre	0
Yellow Clear Before Pre	4.7
Red Clear Before Pre	3.0
Dwell Min Time	10
Ped Clear Through Yellow	N

* Clearance time defaults to time used for phase during normal operation.

2070L LOOP & DETECTOR INSTALLATION

INDUCTIVE LOOPS					DETECTOR PROGRAMMING								
LOOP	SIZE (m)	TURNS	DISTANCE FROM STOPBAR (m)	NEW LOOP	PHASE	CALLING	EXTENSION	FULL TIME DELAY	SYSTEM LOOP	STRETCH TIME	DELAY TIME	NEW CARD
4A	1.8 X 12	2-4-2	+1	Y	4	Y	Y	-	-	-	10	Y
5A	1.8 X 18	2-4-2	+2	Y	5	Y	Y	-	-	-	15	Y
7A	1.8 X 12	2-4-2	+1	Y	7	Y	Y	-	-	-	15	Y
					4	Y	Y	-	-	-	3	Y
8A	1.8 X 12	2-4-2	0	Y	8	Y	Y	-	-	-	10	Y

Prepared in the Office of:

THE LPA GROUP TRANSPORTATION CONSULTANTS

THE LPA GROUP of North Carolina, p.a.
4904 PROFESSIONAL COURT, SUITE 201
Raleigh, North Carolina 27609

SIGNAL UPGRADE - TEMPORARY DESIGN 1

Public Transportation and Safety Systems Branch
Signals and Geometrics Section
DEPARTMENT OF TRANSPORTATION STATE OF NORTH CAROLINA

NC 274 (BESSEMER CITY ROAD)
AT
NC 275 (DALLAS-BESSEMER CITY ROAD)
AND SR 1312 (OATES ROAD)

DIVISION 12 GASTON COUNTY GASTONIA

PLAN DATE: OCT. 30,2003 REVIEWED BY: R.DUBNICKA,P.E.
PREPARED BY: RGL REVIEWED BY:

SCALE 5 0 10 1:500

REVISIONS	INIT.	DATE

SEAL
NORTH CAROLINA PROFESSIONAL SEAL 027742 ENGINEER ROBERT J. DUBNICKA

SIGNATURE DATE 8-9-04

SIG. INVENTORY NO. 12-0012T1

09-AUG-2004 12:28
V:\Traffic\U2408\Signal Plans\SIG-1.dgn
rdubnicka

METRIC	PROJECT REFERENCE NO.	SHEET NO.
	U-2408	SIG. 3

4 PHASE SEMI ACTUATED RAILROAD PREEMPTION ISOLATED

PHASING DIAGRAM

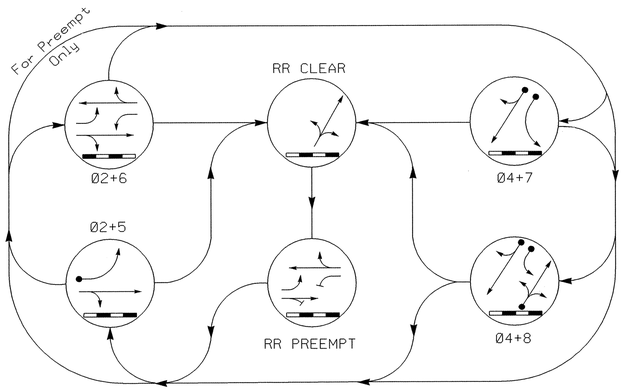

PHASING DIAGRAM DETECTION LEGEND

- DETECTED MOVEMENT
- UNDETECTED MOVEMENT (OVERLAP)
- UNSIGNALIZED MOVEMENT
- PEDESTRIAN MOVEMENT

TABLE OF OPERATION

SIGNAL FACE	PHASE 02+5	02+6	04+7	04+8	RR CLEAR	RR PREEMPT	FLASH
21	G	G	R	R	R	G	Y
22	G	G	R	R	R	G	Y
41	R	R	G	G	R	R	R
42	R	R	G	G	R	R	R
61,62	R	G	R	R	R	G	Y
81	R	R	R	G	G	R	R
82	R	R	R	G	G	R	R
SIGN Ⓑ	OFF	OFF	OFF	OFF	ON	ON	*
SIGN Ⓒ	OFF	OFF	OFF	OFF	ON	ON	*

* - SEE NOTE 6

SIGNAL FACE I.D.

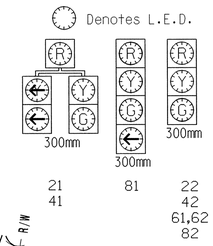

PLAN QUANTITIES

Pay Item	Meters
Signal Cable	0
Messenger Cable	0
Loop Lead-in Cable	0

NOTES

1. Refer to "Roadway Standard Drawings NCDOT" dated January 2002 and "Standard Specifications for Roads and Structures" dated January 2002.
2. Omit Phase 5 during Phase 6 on.
3. Omit Phase 7 during Phase 8 on.
4. Program controller to clear from phase 2+6 to phase 2+5 by progressing through phase 4+8 (see Electrical Details).
5. Set all detector units to presence mode.
6. Ensure flashing operation does not alter operation of blankout signs.
7. This location contains railroad preemption phasing. Do not program signal for late night flashing operation.

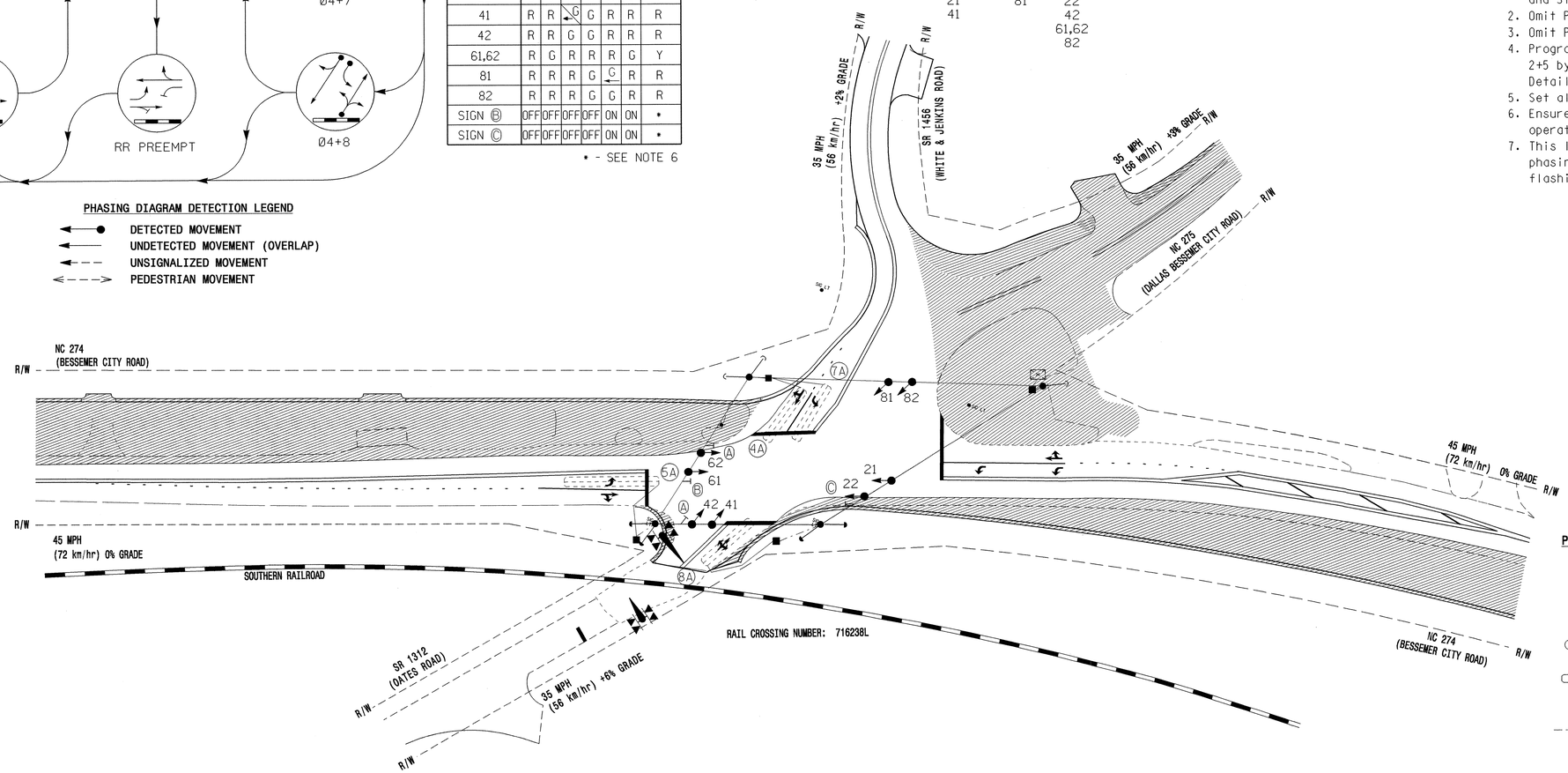

LEGEND

PROPOSED		EXISTING
	Traffic Signal Head	
	Modified Signal Head	N/A
	Sign	
	Pedestrian Signal Head With Push Button & Sign	
	Signal Pole with Guy	
	Signal Pole with Sidewalk Guy	
	Inductive Loop Detector	
	Controller & Cabinet	
	Junction Box	
	50mm Underground Conduit	
N/A	Right of Way with Marker	
	Directional Arrow	
	Pavement Marking Arrow	
N/A	Railroad Gate and Flasher	
N/A	Railroad Tracks	
Ⓐ	"NO TURN ON RED" Sign (R10-11A)	Ⓐ
Ⓑ	"NO LEFT TURN - TRAIN" LED Blankout Sign	Ⓑ
Ⓒ	"NO RIGHT TURN - TRAIN" LED Blankout Sign	Ⓒ
	Construction Zone	

2070L TIMING CHART

FEATURE	PHASE 2	4	5	6	7	8
Min Green 1 *	12	7	7	12	7	7
Extension 1 *	0.0	1.0	1.0	0.0	1.0	1.0
Max Green 1 *	45	20	15	45	15	20
Yellow Clearance	4.7	4.0	4.0	4.7	4.0	4.0
Red Clearance	2.5	1.5	3.0	2.5	1.0	1.5
Walk 1 *	-	-	-	-	-	-
Don't Walk 1	-	-	-	-	-	-
Seconds Per Actuation *	-	-	-	-	-	-
Max Variable Initial *	-	-	-	-	-	-
Time Before Reduction *	-	-	-	-	-	-
Time To Reduce *	-	-	-	-	-	-
Minimum Gap	-	-	-	-	-	-
Recall Mode	MAX RECALL	-	-	MAX RECALL	-	-
Vehicle Call Memory	YELLOW	-	-	YELLOW	-	-
Dual Entry	-	ON	-	-	-	ON
Simultaneous Gap	ON	ON	ON	ON	ON	ON

* These values may be field adjusted. Do not adjust Min Green and Extension times for phases 2 and 6 lower than what is shown. Min Green for all other phases should not be lower than 4 seconds.

2070 RAIL PREEMPTION

Interval 1 – Track Clearance Green	18
Interval 1 – Track Clearance Yellow	4.0
Interval 1 – Track Clearance Red	1.5
Interval 2 – Dwell Green	255
Interval 2 – Dwell Yellow	0.0*
Interval 2 – Dwell Red	0.0*
Interval 5 – Exit Green	0
Interval 5 – Exit Yellow	0.0*
Interval 5 – Exit Red	0.0*
Delay Time	0
Min Green Before Pre	1
Ped Clear Before Pre	0
Yellow Clear Before Pre	4.7
Red Clear Before Pre	3.0
Dwell Min Time	10
Ped Clear Through Yellow	N

* Clearance time defaults to time used for phase during normal operation.

2070L LOOP & DETECTOR INSTALLATION

INDUCTIVE LOOPS					DETECTOR PROGRAMMING							
LOOP	SIZE (m)	TURNS	DISTANCE FROM STOPBAR (m)	NEW LOOP	PHASE	CALLING	EXTENSION	FULL TIME DELAY	SYSTEM LOOP	STRETCH TIME	DELAY TIME	NEW CARD
4A	1.8 X 12	2-4-2	+1	-	4	Y	Y	-	-	-	10	-
5A	1.8 X 18	2-4-2	+2	-	5	Y	Y	-	-	-	15	-
7A	1.8 X 12	2-4-2	+1	-	7	Y	Y	-	-	-	15	-
					4	Y	Y	-	-	-	3	-
8A	1.8 X 12	2-4-2	0	-	8	Y	Y	-	-	-	10	-

Prepared in the Office of:

THE LPA GROUP TRANSPORTATION CONSULTANTS

THE LPA GROUP of North Carolina, p.a.
4904 PROFESSIONAL COURT, SUITE 201
Raleigh, North Carolina 27609

SIGNAL UPGRADE - TEMPORARY DESIGN 2

Traffic Engineering and Safety Systems Branch
STATE OF NORTH CAROLINA DEPARTMENT OF TRANSPORTATION
Signals and Geometrics Section

SCALE 5 0 10 1:500

NC 274 (BESSEMER CITY ROAD)
AT
NC 275 (DALLAS-BESSEMER CITY ROAD)
AND SR 1312 (OATES ROAD)

DIVISION 12 GASTON COUNTY GASTONIA

PLAN DATE: OCT. 30,2003 REVIEWED BY: R.DUBNICKA,P.E.

PREPARED BY: RGL REVIEWED BY:

REVISIONS	INIT.	DATE

SEAL

NORTH CAROLINA PROFESSIONAL SEAL 027742 ENGINEER ROBERT J. DUBNICKA

Robert J. Dubnicka 8-9-04
SIGNATURE DATE

SIG. INVENTORY NO. 12-0012T2

08-AUG-2004 12:28
V:\Traffic\U2408\Signal Plans\SIG-1.2.dgn
rdubnicka

PROJECT REFERENCE NO.	SHEET NO.
U-2408	SIG. 4

EDI MODEL 2010ECL CONFLICT MONITOR PROGRAMMING DETAIL

(remove jumpers and set switches as shown)

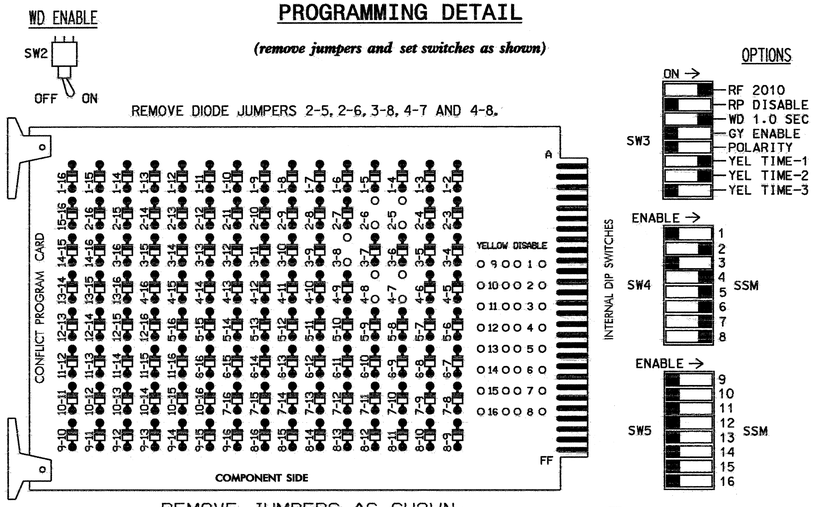

REMOVE JUMPERS AS SHOWN

■ = DENOTES POSITION OF SWITCH

NOTES:

1. CARD IS PROVIDED WITH ALL DIODE JUMPERS IN PLACE. REMOVAL OF ANY JUMPER ALLOWS ITS CHANNELS TO RUN CONCURRENTLY.
2. MAKE SURE JUMPERS SEL1-SEL5 ARE PRESENT ON THE MONITOR BOARD.

NOTES

1. TO PREVENT "FLASH-CONFLICT" PROBLEMS, INSERT RED FLASH PROGRAM BLOCKS FOR ALL UNUSED VEHICLE LOAD SWITCHES IN THE OUTPUT FILE. THE INSTALLER SHALL VERIFY THAT SIGNAL HEADS FLASH IN ACCORDANCE WITH THE SIGNAL PLANS.
2. ENSURE THAT RED ENABLE IS ACTIVE AT ALL TIMES DURING NORMAL OPERATION. TO PREVENT RED FAILURES ON UNUSED MONITOR CHANNELS, TIE UNUSED RED MONITOR INPUTS 1,3,9, 10,11,12,13,14,15 & 16 TO LOAD SWITCH AC+ PER THE CABINET MANUFACTURER'S INSTRUCTIONS.
3. PROGRAM CONTROLLER TO START UP IN PHASES 2 AND 6 GREEN.
4. ENABLE SIMULTANEOUS GAP-OUT FEATURE, ON CONTROLLER UNIT, FOR ALL PHASES.
5. PROGRAM PHASES 4 AND 8, ON CONTROLLER UNIT, FOR DUAL ENTRY.

EQUIPMENT INFORMATION

CONTROLLER.....CONTRACTOR SUPPLIED 2070L
CABINET .....CONTRACTOR SUPPLIED 332
SOFTWARE .....ECONOLITE OASIS 3.00.81
CABINET MOUNT.....BASE
OUTPUT FILE POSITIONS...12
LOAD SWITCHES USED.....S2,S3,S4,S5,S6,S7,S8
PHASES USED.....2,3*,4,5,6,7,8
OVERLAPS.....NONE

* USED DURING PREEMPT ONLY

FIELD CONNECTION HOOK-UP CHART

LOAD SWITCH NO.	S1	S2	S2P	S3	S4	S4P	S5	S6	S6P	S7	S8	S8P
PHASE	1	2	2 PED	3	4	4 PED	5	6	6 PED	7	8	8 PED
SIGNAL HEAD NO.	NU	21,22	NU	81	41,42	NU	21	61,62	NU	41	81,82	NU
GREEN		130			103			136			109	
YELLOW		129		*	102			135			108	
RED		128			101		*	134		*	107	
RED ARROW												
YELLOW ARROW							132			123		
GREEN ARROW				118			133			124		
🚶												
✋												

NU = NOT USED

* DENOTES INSTALL LOAD RESISTOR. SEE LOAD RESISTOR INSTALLATION DETAIL THIS PAGE.

PREEMPT ONLY PHASE OMIT NOTE

(program controller as shown below)

FROM MAIN MENU PRESS '2' (PHASE CONTROL), THEN '1' (PHASE CONTROL FUNCTIONS). PROGRAM PHASE 3 FOR 'OMIT PHASE' AND PHASES 2, 4, 5, 6, 7 AND 8 FOR 'STARTUP CALLS'. THIS IS TO PREVENT PHASE 3 FROM BEING SERVED WHEN NOT IN PREEMPT.

INPUT FILE POSITION LAYOUT

(front view)

		1	2	3	4	5	6	7	8	9	10	11	12	13	14
FILE "I"	U	SLOT EMPTY	SLOT EMPTY	SLOT EMPTY	SLOT EMPTY	SLOT EMPTY	ø4 4A	SLOT EMPTY	SLOT EMPTY	SLOT EMPTY	SLOT EMPTY	SLOT EMPTY	SLOT EMPTY	SLOT EMPTY	FS DC ISOLATOR
	L						NOT USED								ST DC ISOLATOR
FILE "J"	U	SLOT EMPTY	ø5 5A	SLOT EMPTY	SLOT EMPTY	SLOT EMPTY	ø7 7A	ø8 8A	SLOT EMPTY	SLOT EMPTY	SLOT EMPTY	SLOT EMPTY	SLOT EMPTY	SLOT EMPTY	PRE1 AC ISOLATOR
	L		NOT USED				ø4 7A	NOT USED							NOT USED

EX.: 1A, 2A, ETC. = LOOP NO.'S

FS = FLASH SENSE
ST = STOP TIME
PRE = PREEMPT

INPUT FILE CONNECTION & PROGRAMMING CHART

LOOP NO.	LOOP TERMINAL	INPUT FILE POS.	PIN NO.	INPUT ASSIGNMENT NO.	DETECTOR NO.	NEMA PHASE	CALL	EXTEND	FULL TIME DELAY	STRETCH TIME	DELAY TIME
4A	TB4-9,10	I6U	41	3	4	4	Y	Y			10
5A	TB3-5,6	J2U	40	2	6	5	Y	Y			15
7A[1]	TB5-9,10	J6U	42	4	8	7	Y	Y			15
	TB5-11,12	J6L	46	8	18	4	Y	Y			3
8A	TB7-1,2	J7U	66	28	38	8	Y	Y			10

[1] ADD JUMPERS FROM TB5-9 TO TB5-11, AND FROM TB5-10 TO TB5-12.

INPUT FILE POSITION LEGEND: J2L
FILE J
SLOT 2
LOWER

BACK-UP PROTECTION PROGRAMMING DETAIL

(program controller as shown below)

1. FROM MAIN MENU PRESS '2' (PHASE CONTROL), THEN '1' (PHASE CONTROL FUNCTIONS). SCROLL TO THE BOTTOM OF THE MENU AND ENABLE DYNAMIC/BACKUP CONTROL FUNCTIONS 1 AND 2.
2. FROM PHASE CONTROL FUNCTIONS MENU PRESS '2' (DYNAMIC/BACKUP CONTROL FUNCTIONS).

```
DYNAMIC/BACKUP CONTROL FUNCTION #01
            OVERLAPS:¦ABCDEFGHIJKLMNOP
IF OVERLAPS ARE ACTIVE ¦
OR        PHASES:¦123456789101112131415 16
IF PHASES ARE ON¦      X
OMIT PHASES     ¦    X
CALL PHASES     ¦   X
```

PRESS 'NEXT'

```
DYNAMIC/BACKUP CONTROL FUNCTION #02
            OVERLAPS:¦ABCDEFGHIJKLMNOP
IF OVERLAPS ARE ACTIVE ¦
OR        PHASES:¦123456789101112131415 16
IF PHASES ARE ON¦        X
OMIT PHASES     ¦       X
CALL PHASES     ¦
```

BACKUP PROTECTION PROGRAMMING COMPLETE

LOAD RESISTOR INSTALLATION DETAIL

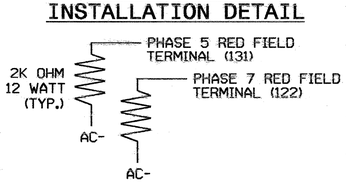

NOTE: THE PURPOSE OF THESE RESISTORS IS TO LOAD THE CHANNEL RED MONITOR INPUTS IN ORDER FOR THE SIGNAL SEQUENCE MONITOR TO USE THE FULL SIGNAL SEQUENCE MONITORING CAPABILITY ON CHANNELS THAT DO NOT USE THE RED DISPLAY IN THE FIELD.

LOAD RESISTOR INSTALLATION DETAIL

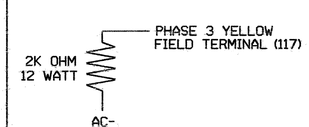

NOTE: THE PURPOSE OF THIS RESISTOR IS TO LOAD THE CHANNEL YELLOW MONITOR INPUT IN ORDER TO PREVENT THE SIGNAL SEQUENCE MONITOR FROM DETECTING ANY POSSIBLE 'PHANTOM' (OR FALSE) CONFLICT, AS THIS CHANNEL HAS NO YELLOW FIELD DISPLAY.

THIS ELECTRICAL DETAIL IS FOR THE SIGNAL DESIGN: 12-0012T1,T2
DESIGNED: 10/30/03
SEALED: 08/09/04
REVISED:

SIGNAL UPGRADE - TEMPORARY DESIGN 1,2 - SHEET 1 OF 2

ELECTRICAL AND PROGRAMMING DETAILS FOR:

NC 274 (BESSEMER CITY ROAD)
AT
NC 275 (DALLAS-BESSEMER CITY ROAD)
AND SR 1312 (OATES ROAD)

DIVISION 12 GASTON COUNTY GASTONIA

PLAN DATE: JULY 2004 REVIEWED BY: T Joyce
PREPARED BY: WILLIAM HAIRSTON REVIEWED BY:

REVISIONS	INIT.	DATE

Prepared in the Offices of: Traffic Engineering and Safety Systems Branch, Signal Management Section, Division of Highways, Department of Transportation, State of North Carolina
122 N. McDowell St., Raleigh, NC 27603

SEAL
NORTH CAROLINA PROFESSIONAL SEAL 022013 ENGINEER GEORGE C. BROWN

George C. Brown 8/16/04
SIGNATURE DATE

SIG. INVENTORY NO. 12-0012T1,T2

11-AUG-2004 07:46
S:\Sig\Mgmt\TJoyce\U2408\12012_2004xxxx.dgn
TJoyce

PROJECT REFERENCE NO.	SHEET NO.
U-2408	SIG. 5

RAILROAD PREEMPTION PROGRAMMING DETAIL

(program controller as shown below)

FROM MAIN MENU PRESS 'A' (PREEMPTION), THEN '1' (STANDARD PREEMPTIONS).

```
   PREEMPTION  #1  SETTINGS (NEXT:1-10)
INTERVAL/TIMING  |  CLEAR/DWELL PHASES
  GRN YEL  RED   |123456789101112131415 16
1  18  4.0  1.5  |  X    X
2 255  0.0  0.0  | X   X
3   0  0.0  0.0  |
4   0  0.0  0.0  |
5   0  0.0  0.0  |
EXIT CALLS       |
            OPTIONS
PRIORITY (Y/N TO SELECT) ............HIGH
DELAY TIMER (0-255 SEC) .............0
MIN GREEN BEFORE PRE (0= DEFAULT)....1
PED CLEAR BEFORE PRE (0= DEFAULT)....0
YELLOW CLEAR BEFORE PRE (0= DEFAULT).4.7
RED CLEAR BEFORE PRE (0= DEFAULT)....3.0
DWELL MIN TIMER (0-255 SEC) .........10
DWELL MAX TIMER (0=OFF,1-255MIN) ....0
DWELL HOLD-OVER TIMER (0-255) .......0
LATCH CALL? .........................N
LINK TO NEXT PREEMPT? ...............N
ENABLE BACKUP PROTECTION? ...........N
HOLD CLEAR 1 PHASES DURING DELAY? ...N
FAST GREEN FLASH DWELL PHASES? ......N
PED CLEARANCE THROUGH YELLOW? .......N
INHIBIT OVERLAP GREEN EXTENSION? ....N
SERVICE DURING SOFTWARE FLASH? ......N
REST IN RED DURING DWELL INTERVAL? ..N
FLASH DWELL INTERVAL? ...............N
ALLOW PEDS IN DWELL INTERVAL? .......N
RE-TIME DWELL INTERVAL? .............N
OVERLAPS:                | ABCDEFGHIJKLMNOP
DWELL INT FLASH YELLOW   |
OMIT OVERLAPS:           |
```

RAILROAD PREEMPTION WIRING DETAIL

(wire as shown below)

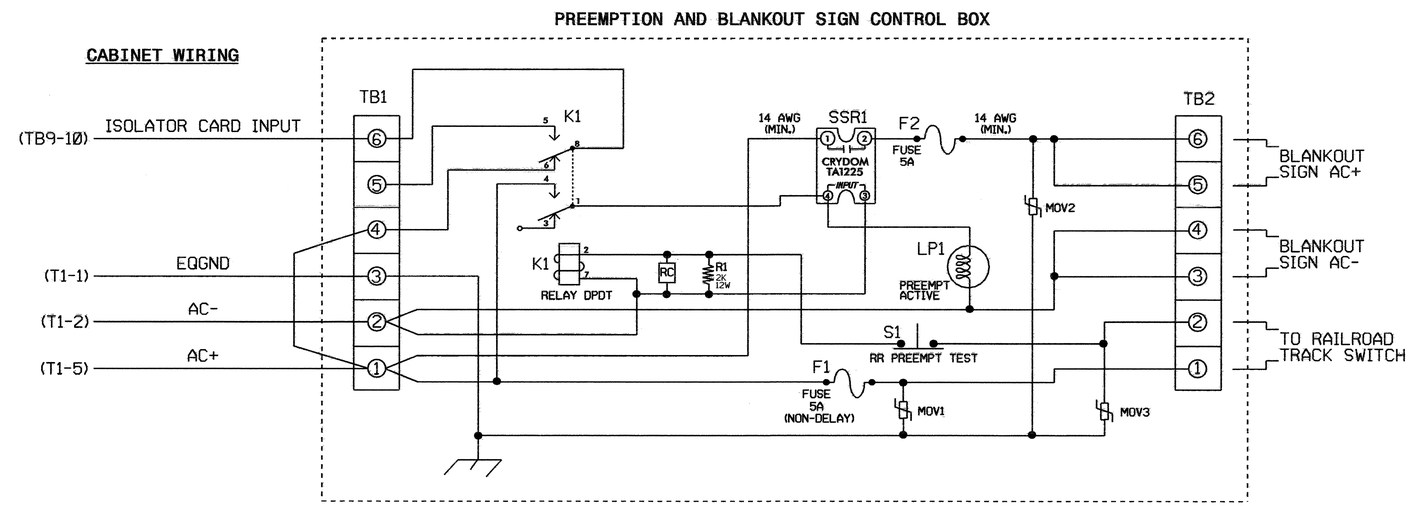

NOTES

1. RELAY K1 IS SHOWN IN THE ENERGIZED (PREEMPT NOT ACTIVE) NORMAL OPERATION STATE.
2. RELAY K1 IS A DPDT WITH 120VAC COIL. POTTER & BRUMFIELD KRP11AG WITH OCTAL BASE OR APPROVED EQUIVALENT.
3. RELAY SSR1 IS A SPST (NORMALLY OPEN) SOLID STATE RELAY WITH AC INPUT AND AC (25 AMP) OUTPUT. CRYDOM TA1225 OR APPROVED EQUIVALENT.
4. AC ISOLATOR CARD SHALL ACTIVATE PREEMPTION UPON REMOVAL OF AC+ FROM THE INPUT (AS SHOWN ABOVE).
5. RESISTOR IS VALUED AT 2K OHM, 12 WATT. CLAROSTAT PART NO. VPR10F-2K OR APPROVED EQUIVALENT.
6. RC NETWORK IS VALUED AT .1 MICROFARAD, 100 OHM.
7. IF REPLACEMENT MOVS ARE NEEDED, GE PART NO. V150LA20A MAY BE USED.
8. PREEMPTION AND BLANKOUT SIGN CONTROL BOX IS A CONTROL TECHNOLOGIES PART NO. 2299-101 OR APPROVED EQUIVALENT.
9. IMPORTANT!! A JUMPER MUST BE ADDED BETWEEN INPUT FILE TERMINALS J14-E AND J14-K IF NOT ALREADY PRESENT. ALSO, TERMINAL TB9-12 (ON INPUT PANEL) SHALL BE CONNECTED TO AC NEUTRAL (JUMPER MAY HAVE TO BE ADDED).

FRONT VIEW

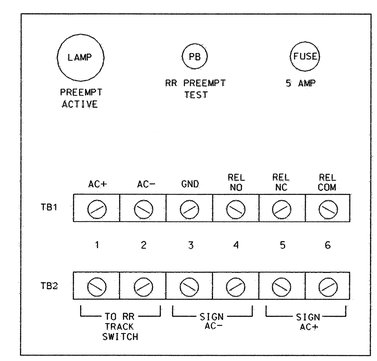

THIS ELECTRICAL DETAIL IS FOR
THE SIGNAL DESIGN: 12-0012T1,T2
DESIGNED: 10/30/03
SEALED: 08/09/04
REVISED:

SIGNAL UPGRADE - TEMPORARY DESIGN 1,2 - SHEET 2 OF 2

ELECTRICAL AND PROGRAMMING DETAILS FOR:

Prepared in the Offices of:
Traffic Engineering and Safety Systems Branch
STATE OF NORTH CAROLINA DEPARTMENT OF TRANSPORTATION
Signal Management Section
122 N. McDowell St., Raleigh, NC 27603

NC 274 (BESSEMER CITY ROAD)
AT
NC 275 (DALLAS-BESSEMER CITY ROAD)
AND SR 1312 (OATES ROAD)

DIVISION 12 GASTON COUNTY GASTONIA

PLAN DATE: JULY 2004 REVIEWED BY: T Joyce
PREPARED BY: WILLIAM HAIRSTON REVIEWED BY:

REVISIONS	INIT.	DATE

SEAL
NORTH CAROLINA PROFESSIONAL SEAL 022013 ENGINEER GEORGE C. BROWN

George C. Brown 8/16/04
SIGNATURE DATE

SIG. INVENTORY NO. 12-0012T1,T2

11-AUG-2004 07:47
S:\ETrigMgmt\Joyce\U2408\12012_2004xxxx.dgn
tjoyce

METRIC	PROJECT REFERENCE NO.	SHEET NO.
	U-2408	SIG. 6

4 PHASE SEMI ACTUATED RAILROAD PREEMPTION ISOLATED

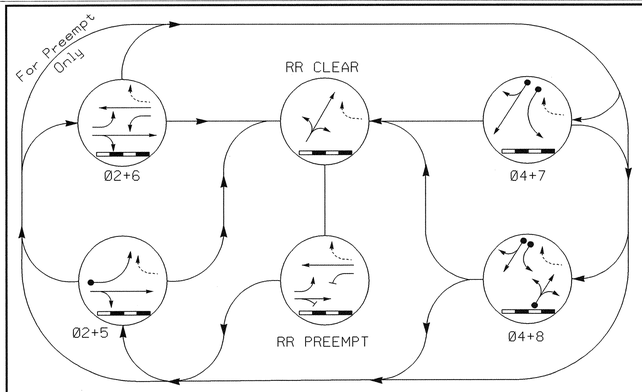

TABLE OF OPERATION

SIGNAL FACE	PHASE Ø2+5	Ø2+6	Ø4+7	Ø4+8	RR CLEAR	RR PREEMPT	FLASH
21	G	G	R	R	R	G	Y
22	G	G	R	R	R	G	Y
41	R	R	G	G	R	R	R
42	R	R	G	G	R	R	R
61	R	G	R	R	R	G	Y
62	R	G	R	R	R	G	Y
81	R	R	R	G	G	R	R
82	R	R	R	G	G	R	R
SIGN Ⓑ	OFF	OFF	OFF	OFF	ON	ON	*
SIGN Ⓒ	OFF	OFF	OFF	OFF	ON	ON	*

* - SEE NOTE 6

SIGNAL FACE I.D.

Denotes L.E.D.

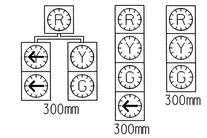

21 41 | 81 | 22 42 61,62 82

PLAN QUANTITIES

Pay Item	Meters
Signal Cable	0
Messenger Cable	0
Loop Lead-in Cable	360

NOTES

1. Refer to "Roadway Standard Drawings NCDOT" dated January 2002 and "Standard Specifications for Roads and Structures" dated January 2002.
2. Omit Phase 5 during Phase 6 on.
3. Omit Phase 7 during Phase 8 on.
4. Program controller to clear from phase 2+6 to phase 2+5 by progressing through phase 4+8 (see Electrical Details).
5. Set all detector units to presence mode.
6. Ensure flashing operation does not alter operation of blankout signs.
7. Reposition existing signal heads numbered #21, 22, 61, 62, 81 and 82, and signs B and C.
8. This location contains railroad preemption phasing. Do not program signal for late night flashing operation.

PHASING DIAGRAM DETECTION LEGEND

- DETECTED MOVEMENT
- UNDETECTED MOVEMENT (OVERLAP)
- UNSIGNALIZED MOVEMENT
- PEDESTRIAN MOVEMENT

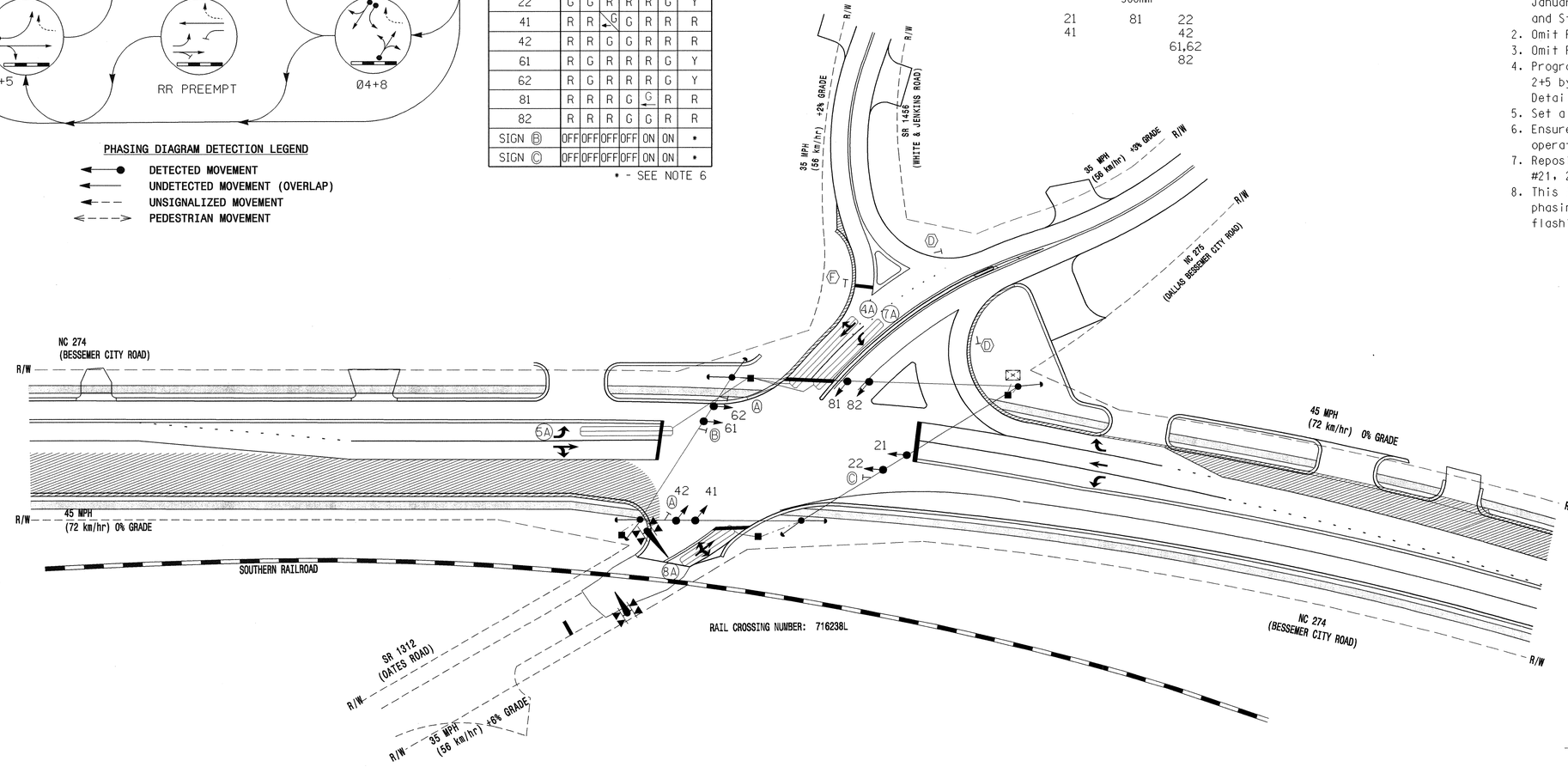

LEGEND

PROPOSED		EXISTING
	Traffic Signal Head	
	Modified Signal Head	N/A
	Sign	
	Pedestrian Signal Head With Push Button & Sign	
	Signal Pole with Guy	
	Signal Pole with Sidewalk Guy	
	Inductive Loop Detector	
	Controller & Cabinet	
	Junction Box	
	50mm Underground Conduit	
N/A	Right of Way with Marker	
	Directional Arrow	
	Pavement Marking Arrow	
N/A	Railroad Gate and Flasher	
N/A	Railroad Tracks	
Ⓐ	"NO TURN ON RED" Sign (R10-11A)	Ⓐ
Ⓑ	"NO LEFT TURN - TRAIN" LED Blankout Sign	Ⓑ
Ⓒ	"NO RIGHT TURN - TRAIN" LED Blankout Sign	Ⓒ
Ⓓ	"YIELD" Sign (R1-2)	Ⓓ
	Construction Zone	

2070L TIMING CHART

FEATURE	PHASE 2	4	5	6	7	8
Min Green 1 *	12	7	7	12	7	7
Extension 1 *	0.0	1.0	1.0	0.0	1.0	1.0
Max Green 1 *	45	20	15	45	15	20
Yellow Clearance	4.7	4.0	4.0	4.7	4.0	4.0
Red Clearance	2.5	2.0	2.5	2.5	1.0	2.0
Walk 1 *	-	-	-	-	-	-
Don't Walk 1	-	-	-	-	-	-
Seconds Per Actuation *	-	-	-	-	-	-
Max Variable Initial *	-	-	-	-	-	-
Time Before Reduction *	-	-	-	-	-	-
Time To Reduce *	-	-	-	-	-	-
Minimum Gap	-	-	-	-	-	-
Recall Mode	MAX RECALL	-	-	MAX RECALL	-	-
Vehicle Call Memory	YELLOW	-	-	YELLOW	-	-
Dual Entry	-	ON	-	-	-	ON
Simultaneous Gap	ON	ON	ON	ON	ON	ON

* These values may be field adjusted. Do not adjust Min Green and Extension times for phases 2 and 6 lower than what is shown. Min Green for all other phases should not be lower than 4 seconds.

2070 RAIL PREEMPTION

Interval 1 – Track Clearance Green	18
Interval 1 – Track Clearance Yellow	4.0
Interval 1 – Track Clearance Red	2.0
Interval 2 – Dwell Green	255
Interval 2 – Dwell Yellow	0.0*
Interval 2 – Dwell Red	0.0*
Interval 5 – Exit Green	0
Interval 5 – Exit Yellow	0.0*
Interval 5 – Exit Red	0.0*
Delay Time	0
Min Green Before Pre	1
Ped Clear Before Pre	0
Yellow Clear Before Pre	4.7
Red Clear Before Pre	2.5
Dwell Min Time	10
Ped Clear Through Yellow	N

* Clearance time defaults to time used for phase during normal operation.

2070L LOOP & DETECTOR INSTALLATION

INDUCTIVE LOOPS					DETECTOR PROGRAMMING							
LOOP	SIZE (m)	TURNS	DISTANCE FROM STOPBAR (m)	NEW LOOP	PHASE	CALLING	EXTENSION	FULL TIME DELAY	SYSTEM LOOP	STRETCH TIME	DELAY TIME	NEW CARD
4A	1.8 X 18	2-4-2	+1	Y	4	Y	Y	-	-	-	10	-
5A	1.8 X 18	2-4-2	+2	Y	5	Y	Y	-	-	-	15	-
7A	1.8 X 18	2-4-2	+1	Y	7	Y	Y	-	-	-	15	-
					4	Y	Y	-	-	-	3	-
8A	1.8 X 12	2-4-2	0	Y	8	Y	Y	-	-	-	10	-

Prepared in the Office of:

THE LPA GROUP
TRANSPORTATION CONSULTANTS
THE LPA GROUP of North Carolina, p.a.
4904 PROFESSIONAL COURT, SUITE 201
Raleigh, North Carolina 27609

SIGNAL UPGRADE - TEMPORARY DESIGN 3

Traffic Engineering and Safety Systems Branch
STATE OF NORTH CAROLINA DEPARTMENT OF TRANSPORTATION
Signals and Geometrics Section

SCALE 5 0 10
1:500

NC 274 (BESSEMER CITY ROAD)
AT
NC 275 (DALLAS-BESSEMER CITY ROAD)
AND SR 1312 (OATES ROAD)

DIVISION 12 GASTON COUNTY GASTONIA

PLAN DATE: OCT. 30,2003	REVIEWED BY: R.DUBNICKA,P.E.
PREPARED BY: RGL	REVIEWED BY:

REVISIONS	INIT.	DATE

SEAL
NORTH CAROLINA PROFESSIONAL SEAL 027742 ENGINEER ROBERT J. DUBNICKA

Robert J. Dubnicka 8-9-04
SIGNATURE DATE

SIG. INVENTORY NO. 12-0012T3

09-AUG-2004 12:28
Y:\Traffic\U2408\Signal Plans\SIG-1A.dgn
cdavis6a

PROJECT REFERENCE NO.	SHEET NO.
U-2408	SIG. 7

EDI MODEL 2010ECL CONFLICT MONITOR PROGRAMMING DETAIL

(remove jumpers and set switches as shown)

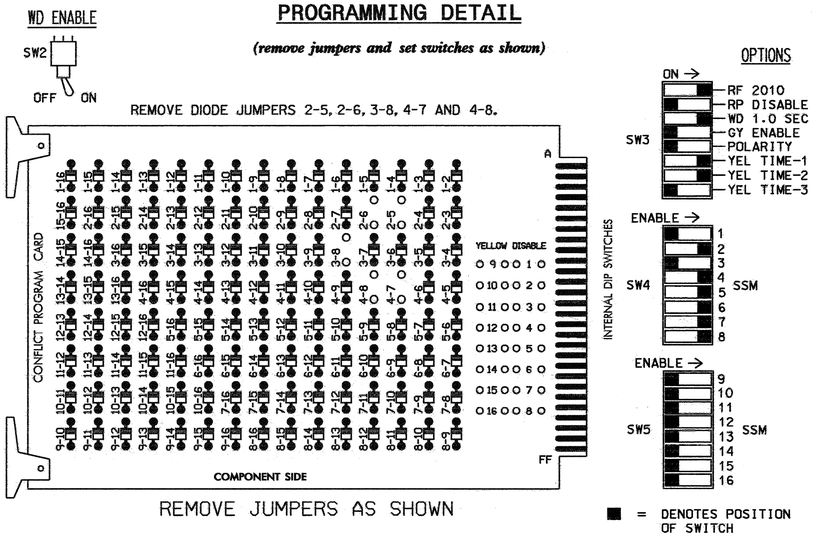

REMOVE JUMPERS AS SHOWN

■ = DENOTES POSITION OF SWITCH

NOTES:

1. CARD IS PROVIDED WITH ALL DIODE JUMPERS IN PLACE. REMOVAL OF ANY JUMPER ALLOWS ITS CHANNELS TO RUN CONCURRENTLY.
2. MAKE SURE JUMPERS SEL1-SEL5 ARE PRESENT ON THE MONITOR BOARD.

NOTES

1. TO PREVENT "FLASH-CONFLICT" PROBLEMS, INSERT RED FLASH PROGRAM BLOCKS FOR ALL UNUSED VEHICLE LOAD SWITCHES IN THE OUTPUT FILE. THE INSTALLER SHALL VERIFY THAT SIGNAL HEADS FLASH IN ACCORDANCE WITH THE SIGNAL PLANS.
2. ENSURE THAT RED ENABLE IS ACTIVE AT ALL TIMES DURING NORMAL OPERATION. TO PREVENT RED FAILURES ON UNUSED MONITOR CHANNELS, TIE UNUSED RED MONITOR INPUTS 1,3,9, 10,11,12,13,14,15 & 16 TO LOAD SWITCH AC+ PER THE CABINET MANUFACTURER'S INSTRUCTIONS.
3. PROGRAM CONTROLLER TO START UP IN PHASES 2 AND 6 GREEN.
4. ENABLE SIMULTANEOUS GAP-OUT FEATURE, ON CONTROLLER UNIT, FOR ALL PHASES.
5. PROGRAM PHASES 4 AND 8, ON CONTROLLER UNIT, FOR DUAL ENTRY.

EQUIPMENT INFORMATION

CONTROLLER.....CONTRACTOR SUPPLIED 2070L
CABINET .....CONTRACTOR SUPPLIED 332
SOFTWARE .....ECONOLITE OASIS 3.00.81
CABINET MOUNT.....BASE
OUTPUT FILE POSITIONS...12
LOAD SWITCHES USED.....S2,S3,S4,S5,S6,S7,S8
PHASES USED.....2,3*,4,5,6,7,8
OVERLAPS.....NONE

* USED DURING PREEMPT ONLY

FIELD CONNECTION HOOK-UP CHART

LOAD SWITCH NO.	S1	S2	S2P	S3	S4	S4P	S5	S6	S6P	S7	S8	S8P
PHASE	1	2	2 PED	3	4	4 PED	5	6	6 PED	7	8	8 PED
SIGNAL HEAD NO.	NU	21,22	NU	81	41,42	NU	21	61,62	NU	41	81,82	NU
GREEN		130			103			136			109	
YELLOW		129		*	102			135			108	
RED		128			101		*	134		*	107	
RED ARROW												
YELLOW ARROW							132			123		
GREEN ARROW				118			133			124		
🚶												
✋												

NU = NOT USED

* DENOTES INSTALL LOAD RESISTOR. SEE LOAD RESISTOR INSTALLATION DETAIL THIS PAGE.

PREEMPT ONLY PHASE OMIT NOTE

(program controller as shown below)

FROM MAIN MENU PRESS '2' (PHASE CONTROL), THEN '1' (PHASE CONTROL FUNCTIONS). PROGRAM PHASE 3 FOR 'OMIT PHASE' AND PHASES 2, 4, 5, 6, 7 AND 8 FOR 'STARTUP CALLS'. THIS IS TO PREVENT PHASE 3 FROM BEING SERVED WHEN NOT IN PREEMPT.

INPUT FILE POSITION LAYOUT

(front view)

		1	2	3	4	5	6	7	8	9	10	11	12	13	14
FILE "I"	U	SLOT EMPTY	SLOT EMPTY	SLOT EMPTY	SLOT EMPTY	SLOT EMPTY	Ø4 4A	SLOT EMPTY	SLOT EMPTY	SLOT EMPTY	SLOT EMPTY	SLOT EMPTY	SLOT EMPTY	SLOT EMPTY	FS DC ISOLATOR
	L						NOT USED								ST DC ISOLATOR
FILE "J"	U	SLOT EMPTY	Ø5 5A	SLOT EMPTY	SLOT EMPTY	SLOT EMPTY	Ø7 7A	Ø8 8A	SLOT EMPTY	SLOT EMPTY	SLOT EMPTY	SLOT EMPTY	SLOT EMPTY	SLOT EMPTY	PRE1 AC ISOLATOR
	L		NOT USED				Ø4 7A	NOT USED							NOT USED

EX.: 1A, 2A, ETC. = LOOP NO.'S

FS = FLASH SENSE
ST = STOP TIME
PRE = PREEMPT

INPUT FILE CONNECTION & PROGRAMMING CHART

LOOP NO.	LOOP TERMINAL	INPUT FILE POS.	PIN NO.	INPUT ASSIGNMENT NO.	DETECTOR NO.	NEMA PHASE	CALL	EXTEND	FULL TIME DELAY	STRETCH TIME	DELAY TIME
4A	TB4-9,10	I6U	41	3	4	4	Y	Y			10
5A	TB3-5,6	J2U	40	2	6	5	Y	Y			15
7A[1]	TB5-9,10	J6U	42	4	8	7	Y	Y			15
	TB5-11,12	J6L	46	8	18	4	Y	Y			3
8A	TB7-1,2	J7U	66	28	38	8	Y	Y			10

[1] ADD JUMPERS FROM TB5-9 TO TB5-11, AND FROM TB5-10 TO TB5-12.

INPUT FILE POSITION LEGEND: J2L
FILE J
SLOT 2
LOWER

BACK-UP PROTECTION PROGRAMMING DETAIL

(program controller as shown below)

1. FROM MAIN MENU PRESS '2' (PHASE CONTROL), THEN '1' (PHASE CONTROL FUNCTIONS). SCROLL TO THE BOTTOM OF THE MENU AND ENABLE DYNAMIC/BACKUP CONTROL FUNCTIONS 1 AND 2.
2. FROM PHASE CONTROL FUNCTIONS MENU PRESS '2' (DYNAMIC/BACKUP CONTROL FUNCTIONS).

```
DYNAMIC/BACKUP CONTROL FUNCTION #01
            OVERLAPS:¦ABCDEFGHIJKLMNOP
IF OVERLAPS ARE ACTIVE ¦
OR        PHASES:¦1234567891011121314 1516
IF PHASES ARE ON¦     X
OMIT PHASES     ¦    X
CALL PHASES     ¦   X
```

PRESS 'NEXT'

```
DYNAMIC/BACKUP CONTROL FUNCTION #02
            OVERLAPS:¦ABCDEFGHIJKLMNOP
IF OVERLAPS ARE ACTIVE ¦
OR        PHASES:¦1234567891011121314 1516
IF PHASES ARE ON¦       X
OMIT PHASES     ¦      X
CALL PHASES     ¦
```

BACKUP PROTECTION PROGRAMMING COMPLETE

LOAD RESISTOR INSTALLATION DETAIL

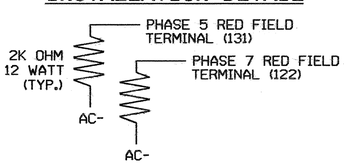

NOTE: THE PURPOSE OF THESE RESISTORS IS TO LOAD THE CHANNEL RED MONITOR INPUTS IN ORDER FOR THE SIGNAL SEQUENCE MONITOR TO USE THE FULL SIGNAL SEQUENCE MONITORING CAPABILITY ON CHANNELS THAT DO NOT USE THE RED DISPLAY IN THE FIELD.

LOAD RESISTOR INSTALLATION DETAIL

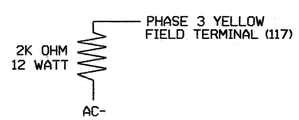

NOTE: THE PURPOSE OF THIS RESISTOR IS TO LOAD THE CHANNEL YELLOW MONITOR INPUT IN ORDER TO PREVENT THE SIGNAL SEQUENCE MONITOR FROM DETECTING ANY POSSIBLE 'PHANTOM' (OR FALSE) CONFLICT, AS THIS CHANNEL HAS NO YELLOW FIELD DISPLAY.

THIS ELECTRICAL DETAIL IS FOR
THE SIGNAL DESIGN: 12-0012T3
DESIGNED: 10/30/03
SEALED: 08/09/04
REVISED:

SIGNAL UPGRADE - TEMPORARY DESIGN 3 - SHEET 1 OF 2

ELECTRICAL AND PROGRAMMING DETAILS FOR:

Prepared in the Offices of: Traffic Engineering and Safety Systems Branch, Traffic Management Section, Division of Highways, N.C. Department of Transportation
122 N. McDowell St., Raleigh, NC 27603

NC 274 (BESSEMER CITY ROAD)
AT
NC 275 (DALLAS-BESSEMER CITY ROAD)
AND SR 1312 (OATES ROAD)

DIVISION 12 GASTON COUNTY GASTONIA

PLAN DATE: JULY 2004 REVIEWED BY: T. Jones
PREPARED BY: WILLIAM HAIRSTON REVIEWED BY:

REVISIONS	INIT.	DATE

SEAL
NORTH CAROLINA PROFESSIONAL SEAL 022013 ENGINEER GEORGE C. BROWN
George C. Brown 8/16/04
SIGNATURE DATE
SIG. INVENTORY NO. 12-0012T3

11-AUG-2004 07:49
S:\ES\GMgmt\Joyce\U2408\12012_2004xxxx.dgn
joyce

PROJECT REFERENCE NO.	SHEET NO.
U-2408	SIG. 8

RAILROAD PREEMPTION PROGRAMMING DETAIL

(program controller as shown below)

FROM MAIN MENU PRESS 'A' (PREEMPTION), THEN '1' (STANDARD PREEMPTIONS).

```
   PREEMPTION  #1  SETTINGS (NEXT:1-10)
INTERVAL/TIMING ¦  CLEAR/DWELL PHASES
  GRN YEL  RED  ¦123456789101112131415 16
1  18  4.0  2.0 ¦  X    X
2 255  0.0  0.0 ¦ X   X
3   0  0.0  0.0 ¦
4   0  0.0  0.0 ¦
5   0  0.0  0.0 ¦
EXIT CALLS      ¦
            OPTIONS
PRIORITY (Y/N TO SELECT) ............HIGH
DELAY TIMER (0-255 SEC) .............0
MIN GREEN BEFORE PRE (0= DEFAULT)....1
PED CLEAR BEFORE PRE (0= DEFAULT)....0
YELLOW CLEAR BEFORE PRE (0= DEFAULT).4.7
RED CLEAR BEFORE PRE (0= DEFAULT)....2.5
DWELL MIN TIMER (0-255 SEC) .........10
DWELL MAX TIMER (0=OFF,1-255MIN) ....0
DWELL HOLD-OVER TIMER (0-255) .......0
LATCH CALL? .........................N
LINK TO NEXT PREEMPT? ...............N
ENABLE BACKUP PROTECTION? ...........N
HOLD CLEAR 1 PHASES DURING DELAY? ...N
FAST GREEN FLASH DWELL PHASES? ......N
PED CLEARANCE THROUGH YELLOW? .......N
INHIBIT OVERLAP GREEN EXTENSION? ....N
SERVICE DURING SOFTWARE FLASH? ......N
REST IN RED DURING DWELL INTERVAL? ..N
FLASH DWELL INTERVAL? ...............N
ALLOW PEDS IN DWELL INTERVAL? .......N
RE-TIME DWELL INTERVAL? .............N
OVERLAPS:                ¦ ABCDEFGHIJKLMNOP
DWELL INT FLASH YELLOW   ¦
OMIT OVERLAPS:           ¦
```

RAILROAD PREEMPTION WIRING DETAIL

(wire as shown below)

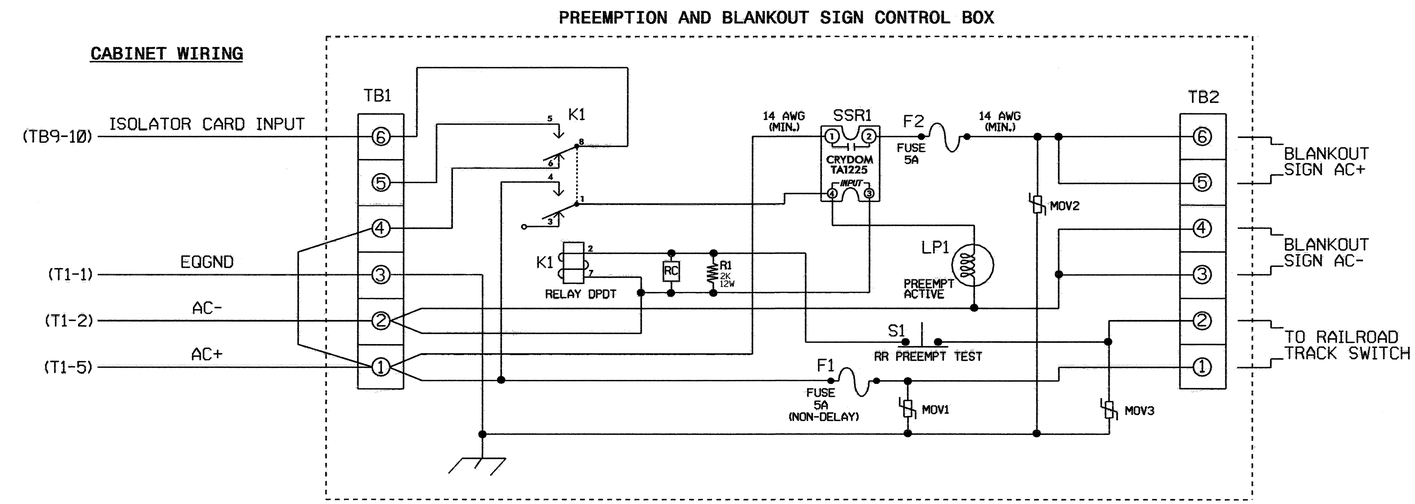

NOTES

1. RELAY K1 IS SHOWN IN THE ENERGIZED (PREEMPT NOT ACTIVE) NORMAL OPERATION STATE.
2. RELAY K1 IS A DPDT WITH 120VAC COIL. POTTER & BRUMFIELD KRP11AG WITH OCTAL BASE OR APPROVED EQUIVALENT.
3. RELAY SSR1 IS A SPST (NORMALLY OPEN) SOLID STATE RELAY WITH AC INPUT AND AC (25 AMP) OUTPUT. CRYDOM TA1225 OR APPROVED EQUIVALENT.
4. AC ISOLATOR CARD SHALL ACTIVATE PREEMPTION UPON REMOVAL OF AC+ FROM THE INPUT (AS SHOWN ABOVE).
5. RESISTOR IS VALUED AT 2K OHM, 12 WATT. CLAROSTAT PART NO. VPR10F-2K OR APPROVED EQUIVALENT.
6. RC NETWORK IS VALUED AT .1 MICROFARAD, 100 OHM.
7. IF REPLACEMENT MOVS ARE NEEDED, GE PART NO. V150LA20A MAY BE USED.
8. PREEMPTION AND BLANKOUT SIGN CONTROL BOX IS A CONTROL TECHNOLOGIES PART NO. 2299-101 OR APPROVED EQUIVALENT.
9. IMPORTANT!! A JUMPER MUST BE ADDED BETWEEN INPUT FILE TERMINALS J14-E AND J14-K IF NOT ALREADY PRESENT. ALSO, TERMINAL TB9-12 (ON INPUT PANEL) SHALL BE CONNECTED TO AC NEUTRAL (JUMPER MAY HAVE TO BE ADDED).

FRONT VIEW

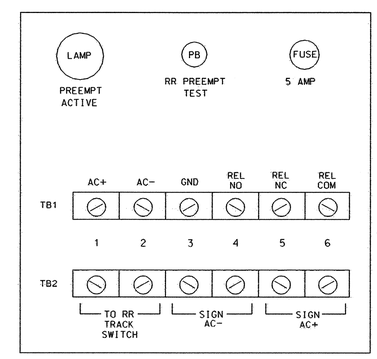

THIS ELECTRICAL DETAIL IS FOR
THE SIGNAL DESIGN: 12-0012T3
DESIGNED: 10/30/03
SEALED: 08/09/04
REVISED:

SIGNAL UPGRADE - TEMPORARY DESIGN 3 - SHEET 2 OF 2

ELECTRICAL AND PROGRAMMING DETAILS FOR:

Prepared in the Offices of:
Traffic Engineering and Safety Systems Branch
DIVISION OF HIGHWAYS
DEPARTMENT OF TRANSPORTATION
Signals Management Section
122 N. McDowell St., Raleigh, NC 27603

NC 274 (BESSEMER CITY ROAD)
AT
NC 275 (DALLAS-BESSEMER CITY ROAD)
AND SR 1312 (OATES ROAD)

DIVISION 12 GASTON COUNTY GASTONIA

PLAN DATE:	JULY 2004	REVIEWED BY:	TJ
PREPARED BY:	WILLIAM HAIRSTON	REVIEWED BY:	

REVISIONS	INIT.	DATE

SEAL
NORTH CAROLINA PROFESSIONAL SEAL 022013 ENGINEER GEORGE C. BROWN

George C. Brown 8/6/04
SIGNATURE DATE

SIG. INVENTORY NO. 12-0012T3

11-AUG-2004 07:51
S:\Sig\Gmt\TJoyce\U2408\12012_2004xxxx.dgn
129398

METRIC	PROJECT REFERENCE NO.	SHEET NO.
	U-2408	SIG. 9

6 PHASE FULLY ACTUATED GASTONIA CITY SIGNAL SYSTEM

PHASING DIAGRAM

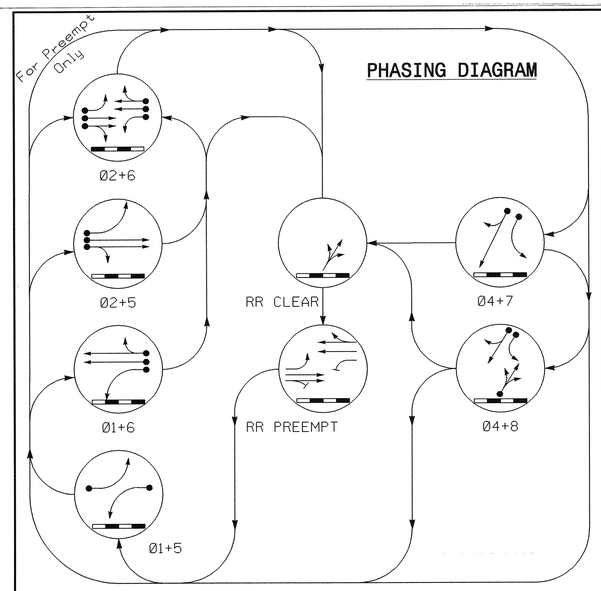

2070 RAIL PREEMPTION

Interval 1 – Track Clearance Green	18
Interval 1 – Track Clearance Yellow	4.0
Interval 1 – Track Clearance Red	2.0
Interval 2 – Dwell Green	255
Interval 2 – Dwell Yellow	0.0*
Interval 2 – Dwell Red	0.0*
Interval 5 – Exit Green	0
Interval 5 – Exit Yellow	0.0*
Interval 5 – Exit Red	0.0*
Delay Time	0
Min Green Before Pre	1
Ped Clear Before Pre	0
Yellow Clear Before Pre	5.0
Red Clear Before Pre	3.0
Dwell Min Time	10
Ped Clear Through Yellow	N

* Clearance time defaults to time used for phase during normal operation.

TABLE OF OPERATION

SIGNAL FACE	PHASE 01+5	01+6	02+5	02+6	04+7	04+8	RR CLEAR	RR PREEMPT	FLASH
21	←R	R	←G	G	R	R	R	G	Y
22	R	R	G	G	R	R	R	G	Y
41	R	R	R	R	←G	G	R	R	R
42	R	R	R	R	G	G	R	R	R
61	←R	←G	R	G	R	R	R	G	Y
62	R	G	R	G	R	R	R	G	Y
81	R	R	R	R	R	G	←G	R	R
82	R	R	R	R	R	G	G	R	R
SIGN Ⓑ	OFF	OFF	OFF	OFF	OFF	OFF	ON	ON	*
SIGN Ⓒ	OFF	OFF	OFF	OFF	OFF	OFF	ON	ON	*

* - SEE NOTE 7

PLAN QUANTITIES

Pay Item	Meters
Signal Cable	600
Messenger Cable	0
Loop Lead-in Cable	1260

NOTES

1. Refer to "Roadway Standard Drawings NCDOT" dated January 2002 and "Standard Specifications for Roads and Structures" dated January 2002.
2. Omit Phase 1 during Phase 2 on.
3. Omit Phase 5 during Phase 6 on.
4. Omit Phase 7 during Phase 8 on.
5. Program controller to clear from phase 2+6 to phase 1 and/or 5 by progressing through phase 4+8 (see Electrical Details).
6. Set all detector units to presence mode.
7. Ensure flashing operation does not alter operation of blankout signs.
8. Maximum times shown in timing chart are for free run operation only. Coordinated signal system timing values shall supersede these values.
9. System data: Controller Asset: 0012
10. This location contains railroad preemption phasing. Do not program signal for late night flashing operation.

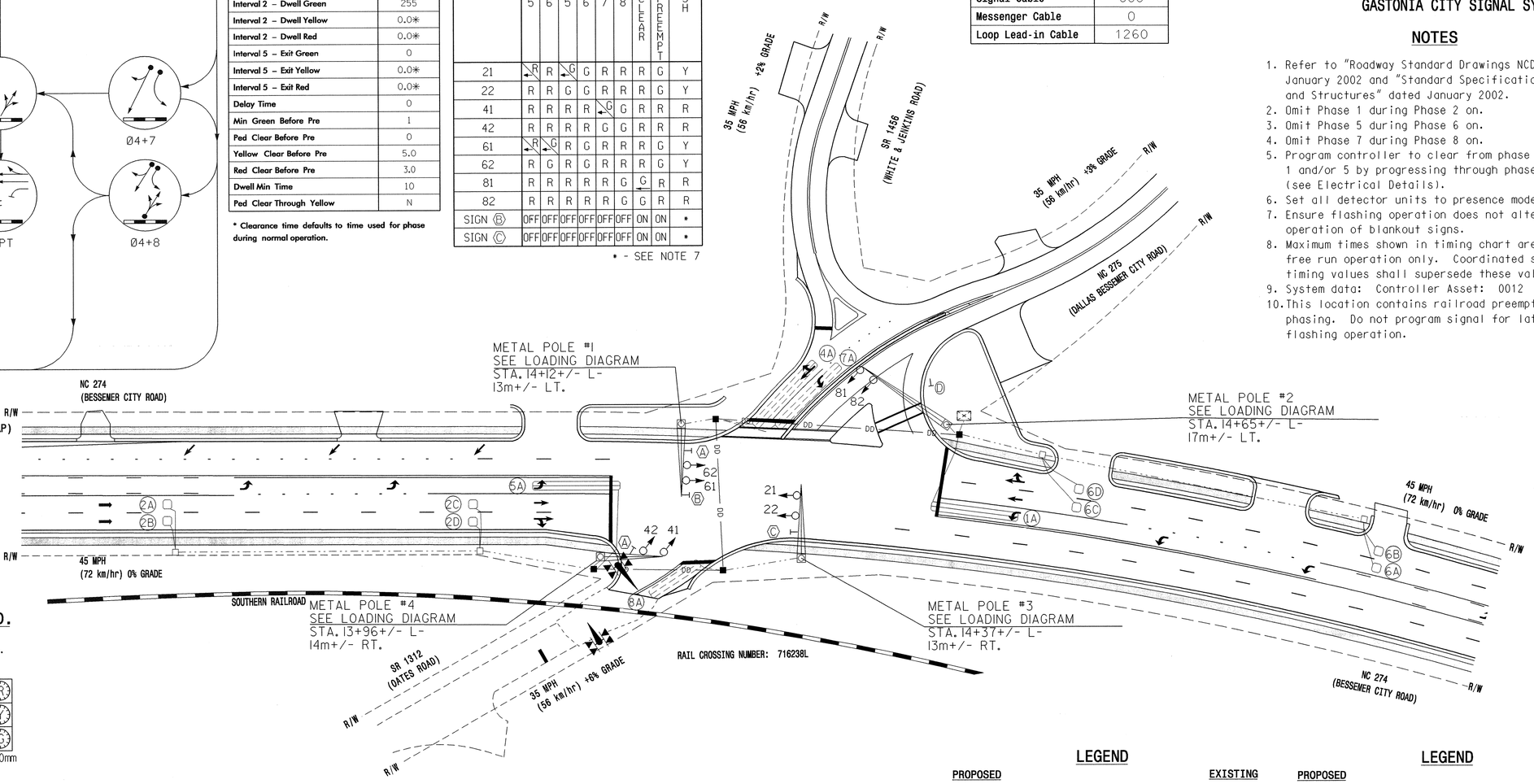

PHASING DIAGRAM DETECTION LEGEND

- DETECTED MOVEMENT
- UNDETECTED MOVEMENT (OVERLAP)
- UNSIGNALIZED MOVEMENT
- PEDESTRIAN MOVEMENT

SIGNAL FACE I.D.

Denotes L.E.D.

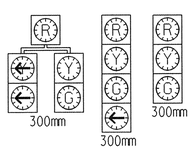

21, 41, 61 | 81 | 22, 42, 62, 82

2070L TIMING CHART

FEATURE	PHASE 1	2	4	5	6	7	8
Min Green 1 *	7	12	7	7	12	7	7
Extension 1 *	1.0	2.0	1.0	1.0	2.0	1.0	1.0
Max Green 1 *	15	45	20	15	45	15	20
Yellow Clearance	5.0	5.0	4.0	5.0	5.0	4.0	4.0
Red Clearance	3.0	3.0	2.0	3.0	3.0	1.0	2.0
Walk 1 *	-	-	-	-	-	-	-
Don't Walk 1	-	-	-	-	-	-	-
Seconds Per Actuation *	-	-	-	-	-	-	-
Max Variable Initial *	-	-	-	-	-	-	-
Time Before Reduction *	-	-	-	-	-	-	-
Time To Reduce *	-	-	-	-	-	-	-
Minimum Gap	-	-	-	-	-	-	-
Recall Mode	-	MIN RECALL	-	-	MIN RECALL	-	-
Vehicle Call Memory	-	YELLOW	-	-	YELLOW	-	-
Dual Entry	-	-	ON	-	-	-	ON
Simultaneous Gap	ON	ON	ON	ON	ON	ON	ON

* These values may be field adjusted. Do not adjust Min Green and Extension times for phases 2 and 6 lower than what is shown. Min Green for all other phases should not be lower than 4 seconds.

2070L LOOP & DETECTOR INSTALLATION

INDUCTIVE LOOPS					DETECTOR PROGRAMMING						
LOOP	SIZE (m)	TURNS	DISTANCE FROM STOPBAR (m)	NEW LOOP	PHASE	CALLING	EXTENSION	FULL TIME DELAY	SYSTEM LOOP	STRETCH TIME	DELAY TIME	NEW CARD
1A	1.8 X 18	2-4-2	+1	Y	1	Y	Y	-	-	-	15	Y
					6	Y	Y	-	-	-	-	Y
2A,2B	1.8 X 1.8	6	90	Y	2	Y	Y	-	-	1.8	-	Y
2C,2D	1.8 X 1.8	5	27	Y	2	Y	Y	-	-	-	-	Y
4A	1.8 X 18	2-4-2	+1	-	4	Y	Y	-	-	-	10	-
5A	1.8 X 18	2-4-2	+1	Y	5	Y	Y	-	-	-	15	-
					2	Y	Y	-	-	-	-	Y
6A,6B	1.8 X 1.8	4	90	Y	6	Y	Y	-	-	1.8	-	Y
6C,6D	1.8 X 1.8	4	27	Y	6	Y	Y	-	-	-	-	Y
7A	1.8 X 18	2-4-2	+1	-	7	Y	Y	-	-	-	15	-
					4	Y	Y	-	-	-	3	-
8A	1.8 X 12	2-4-2	0	-	8	Y	Y	-	-	-	10	-

LEGEND

PROPOSED		EXISTING
	Metal Pole with Mast Arm	
— DD —	Directional Drill 2 - 50mm Polyethylene Conduit	N/A
N/A	Railroad Gate and Flasher	
N/A	Railroad Tracks	
Ⓐ	"NO TURN ON RED" Sign (R10-11A)	Ⓐ
Ⓑ	"NO LEFT TURN - TRAIN" LED Blankout Sign	Ⓑ
Ⓒ	"NO RIGHT TURN - TRAIN" LED Blankout Sign	Ⓒ
Ⓓ	"YIELD" Sign (R1-2)	Ⓓ

LEGEND

PROPOSED		EXISTING
	Traffic Signal Head	
	Modified Signal Head	N/A
	Sign	
	Pedestrian Signal Head With Push Button & Sign	
	Signal Pole with Guy	
	Signal Pole with Sidewalk Guy	
	Inductive Loop Detector	
	Controller & Cabinet	
	Junction Box	
	50mm Underground Conduit	
N/A	Right of Way with Marker	
	Directional Arrow	
	Pavement Marking Arrow	

SIGNAL UPGRADE - FINAL DESIGN

Prepared in the Office of:

THE LPA GROUP
TRANSPORTATION CONSULTANTS
THE LPA GROUP of North Carolina, p.a.
4904 PROFESSIONAL COURT, SUITE 201
Raleigh, North Carolina 27609

Traffic Engineering and Safety Systems Branch
Signals and Geometrics Section
DEPARTMENT OF TRANSPORTATION

SCALE 1:500

NC 274 (BESSEMER CITY ROAD) AT NC 275 (DALLAS-BESSEMER CITY ROAD) AND SR 1312 (OATES ROAD)

DIVISION 12 GASTON COUNTY GASTONIA

PLAN DATE:	OCT. 30,2003	REVIEWED BY:	R.DUBNICKA,P.E.
PREPARED BY:	RGL	REVIEWED BY:	

REVISIONS	INIT.	DATE

SEAL

NORTH CAROLINA PROFESSIONAL SEAL 027742 ENGINEER ROBERT J. DUBNICKA

Robert J. Dubnicka 8-9-04
SIGNATURE DATE

SIG. INVENTORY NO. 12-0012

09-AUG-2004 12:28
Y:\Traffic\U2408\Signal Plans\SIG-1B.dgn
rdubnicka

PROJECT REFERENCE NO.	SHEET NO.
U-2408	SIG. 10

EDI MODEL 2010ECL CONFLICT MONITOR PROGRAMMING DETAIL

(remove jumpers and set switches as shown)

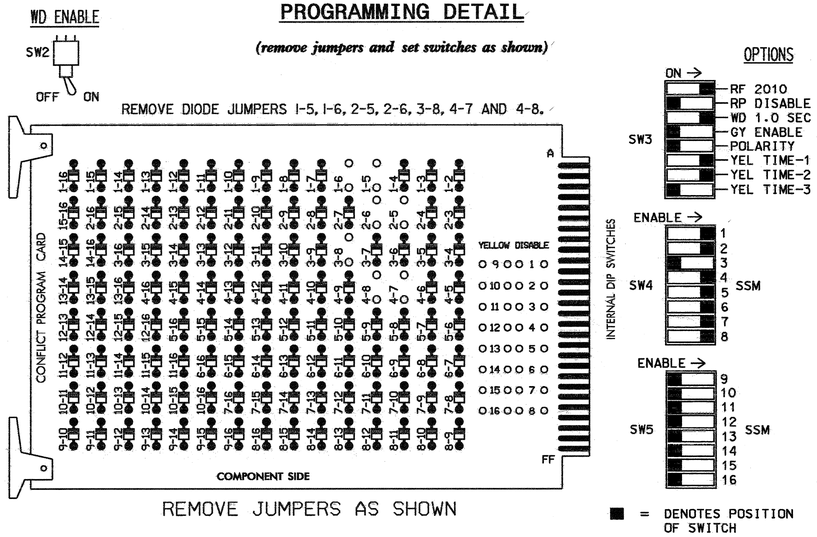

REMOVE JUMPERS AS SHOWN

NOTES:

1. CARD IS PROVIDED WITH ALL DIODE JUMPERS IN PLACE. REMOVAL OF ANY JUMPER ALLOWS ITS CHANNELS TO RUN CONCURRENTLY.
2. MAKE SURE JUMPERS SEL1-SEL5 ARE PRESENT ON THE MONITOR BOARD.

INPUT FILE POSITION LAYOUT

(front view)

		1	2	3	4	5	6	7	8	9	10	11	12	13	14
FILE "I"	U	SLOT	Ø1	Ø2	SLOT	SLOT	Ø4	SLOT	SLOT	SLOT	SLOT	SLOT	SLOT	SLOT	FS DC ISOLATOR
			1A	2A,2B			4A								
	L	EMPTY	Ø6	Ø2	EMPTY	EMPTY	NOT USED	EMPTY	EMPTY	EMPTY	EMPTY	EMPTY	EMPTY	EMPTY	ST DC ISOLATOR
			1A	2C,2D											
FILE "J"	U	SLOT	Ø5	Ø6	SLOT	SLOT	Ø7	Ø8	SLOT	SLOT	SLOT	SLOT	SLOT	SLOT	PRE1 AC ISOLATOR
			5A	6A,6B			7A	8A							
	L	EMPTY	Ø2	Ø6	EMPTY	EMPTY	Ø4	NOT USED	EMPTY	EMPTY	EMPTY	EMPTY	EMPTY	EMPTY	NOT USED
			5A	6C,6D			7A								

EX.: 1A, 2A, ETC. = LOOP NO.'S

FS = FLASH SENSE
ST = STOP TIME
PRE = PREEMPT

LOAD RESISTOR INSTALLATION DETAIL

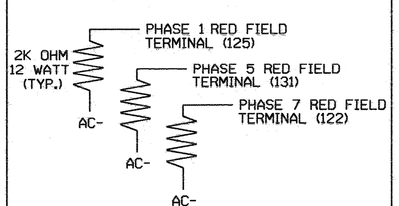

NOTE: THE PURPOSE OF THESE RESISTORS IS TO LOAD THE CHANNEL RED MONITOR INPUTS IN ORDER FOR THE SIGNAL SEQUENCE MONITOR TO USE THE FULL SIGNAL SEQUENCE MONITORING CAPABILITY ON CHANNELS THAT DO NOT USE THE RED DISPLAY IN THE FIELD.

LOAD RESISTOR INSTALLATION DETAIL

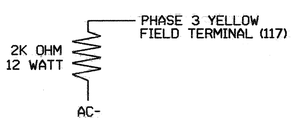

NOTE: THE PURPOSE OF THIS RESISTOR IS TO LOAD THE CHANNEL YELLOW MONITOR INPUT IN ORDER TO PREVENT THE SIGNAL SEQUENCE MONITOR FROM DETECTING ANY POSSIBLE 'PHANTOM' (OR FALSE) CONFLICT, AS THIS CHANNEL HAS NO YELLOW FIELD DISPLAY.

NOTES

1. TO PREVENT "FLASH-CONFLICT" PROBLEMS, INSERT RED FLASH PROGRAM BLOCKS FOR ALL UNUSED VEHICLE LOAD SWITCHES IN THE OUTPUT FILE. THE INSTALLER SHALL VERIFY THAT SIGNAL HEADS FLASH IN ACCORDANCE WITH THE SIGNAL PLANS.
2. ENSURE THAT RED ENABLE IS ACTIVE AT ALL TIMES DURING NORMAL OPERATION. TO PREVENT RED FAILURES ON UNUSED MONITOR CHANNELS, TIE UNUSED RED MONITOR INPUTS 3,9, 10,11,12,13,14,15 & 16 TO LOAD SWITCH AC+ PER THE CABINET MANUFACTURER'S INSTRUCTIONS.
3. PROGRAM CONTROLLER TO START UP IN PHASES 2 AND 6 GREEN.
4. ENABLE SIMULTANEOUS GAP-OUT FEATURE, ON CONTROLLER UNIT, FOR ALL PHASES.
5. PROGRAM PHASES 4 AND 8, ON CONTROLLER UNIT, FOR DUAL ENTRY.
6. THE CABINET AND CONTROLLER ARE PART OF THE GASTONIA CITY SIGNAL SYSTEM.

EQUIPMENT INFORMATION

CONTROLLER.....CONTRACTOR SUPPLIED 2070L
CABINET .....CONTRACTOR SUPPLIED 332
SOFTWARE .....ECONOLITE OASIS 3.00.81
CABINET MOUNT.....BASE
OUTPUT FILE POSITIONS...12
LOAD SWITCHES USED.....S1,S2,S3,S4,S5,S6,S7,S8
PHASES USED.....1,2,3,*4,5,6,7,8
OVERLAPS.....NONE

* USED DURING PREEMPT ONLY

PREEMPT ONLY PHASE OMIT NOTE

(program controller as shown below)

FROM MAIN MENU PRESS '2' (PHASE CONTROL), THEN '1' (PHASE CONTROL FUNCTIONS). PROGRAM PHASE 3 FOR 'OMIT PHASE' AND PHASES 1, 2, 4, 5, 6, 7 AND 8 FOR 'STARTUP CALLS'. THIS IS TO PREVENT PHASE 3 FROM BEING SERVED WHEN NOT IN PREEMPT.

INPUT FILE CONNECTION & PROGRAMMING CHART

LOOP NO.	LOOP TERMINAL	INPUT FILE POS.	PIN NO.	INPUT ASSIGNMENT NO.	DETECTOR NO.	NEMA PHASE	CALL	EXTEND	FULL TIME DELAY	STRETCH TIME	DELAY TIME
1A[1]	TB2-5,6	I2U	39	1	2	1	Y	Y			15
	TB2-7,8	I2L	43	5	12	6	Y	Y			
2A,2B	TB2-9,10	I3U	63	25	32	2	Y	Y		1.8	
2C,2D	TB2-11,12	I3L	76	38	42	2	Y	Y			
4A	TB4-9,10	I6U	41	3	4	4	Y	Y			10
5A[2]	TB3-5,6	J2U	40	2	6	5	Y	Y			15
	TB3-7,8	J2L	44	6	16	2	Y	Y			
6A,6B	TB3-9,10	J3U	64	26	36	6	Y	Y		1.8	
6C,6D	TB3-11,12	J3L	77	39	46	6	Y	Y			
7A[3]	TB5-9,10	J6U	42	4	8	7	Y	Y			15
	TB5-11,12	J6L	46	8	18	4	Y	Y			3
8A	TB7-1,2	J7U	66	28	38	8	Y	Y			10

[1] ADD JUMPERS FROM TB2-5 TO TB2-7, AND FROM TB2-6 TO TB2-8.
[2] ADD JUMPERS FROM TB3-5 TO TB3-7, AND FROM TB3-6 TO TB3-8.
[3] ADD JUMPERS FROM TB5-9 TO TB5-11, AND FROM TB5-10 TO TB5-12.

INPUT FILE POSITION LEGEND: J2L
FILE J
SLOT 2
LOWER

THIS ELECTRICAL DETAIL IS FOR
THE SIGNAL DESIGN: 12-0012
DESIGNED: 10/30/03
SEALED: 08/09/04
REVISED:

FIELD CONNECTION HOOK-UP CHART

LOAD SWITCH NO.	S1	S2	S2P	S3	S4	S4P	S5	S6	S6P	S7	S8	S8P
PHASE	1	2	2 PED	3	4	4 PED	5	6	6 PED	7	8	8 PED
SIGNAL HEAD NO.	61	21,22	NU	81	41,42	NU	21	61,62	NU	41	81,82	NU
GREEN		130			103			136			109	
YELLOW		129		*	102			135			108	
RED	*	128			101		*	134		*	107	
RED ARROW												
YELLOW ARROW	126						132			123		
GREEN ARROW	127			118			133			124		
🚶												
✋												

NU = NOT USED
* DENOTES INSTALL LOAD RESISTOR. SEE LOAD RESISTOR INSTALLATION DETAIL THIS PAGE.

BACK-UP PROTECTION PROGRAMMING DETAIL

(program controller as shown below)

1. FROM MAIN MENU PRESS '2' (PHASE CONTROL), THEN '1' (PHASE CONTROL FUNCTIONS). SCROLL TO THE BOTTOM OF THE MENU AND ENABLE DYNAMIC/BACKUP CONTROL FUNCTIONS 1, 2 AND 3.
2. FROM PHASE CONTROL FUNCTIONS MENU PRESS '2' (DYNAMIC/BACKUP CONTROL FUNCTIONS).

```
DYNAMIC/BACKUP CONTROL FUNCTION #01
                 OVERLAPS:¦ABCDEFGHIJKLMNOP
IF OVERLAPS ARE ACTIVE ¦
OR        PHASES:¦123456789101112131415 16
IF PHASES ARE ON¦ X
OMIT PHASES     ¦X
CALL PHASES     ¦   X
```

PRESS 'NEXT'

```
DYNAMIC/BACKUP CONTROL FUNCTION #02
                 OVERLAPS:¦ABCDEFGHIJKLMNOP
IF OVERLAPS ARE ACTIVE ¦
OR        PHASES:¦123456789101112131415 16
IF PHASES ARE ON¦     X
OMIT PHASES     ¦    X
CALL PHASES     ¦   X
```

PRESS 'NEXT'

```
DYNAMIC/BACKUP CONTROL FUNCTION #03
                 OVERLAPS:¦ABCDEFGHIJKLMNOP
IF OVERLAPS ARE ACTIVE ¦
OR        PHASES:¦123456789101112131415 16
IF PHASES ARE ON¦       X
OMIT PHASES     ¦      X
CALL PHASES     ¦
```

BACKUP PROTECTION PROGRAMMING COMPLETE

SIGNAL UPGRADE - FINAL DESIGN - SHEET 1 OF 2

ELECTRICAL AND PROGRAMMING DETAILS FOR:

Prepared in the Offices of: Traffic Engineering and Safety Systems Branch, Signal Management Section, Division of Highways, State of North Carolina, Department of Transportation

122 N. McDowell St., Raleigh, NC 27603

NC 274 (BESSEMER CITY ROAD) AT NC 275 (DALLAS-BESSEMER CITY ROAD) AND SR 1312 (OATES ROAD)

DIVISION 12 | GASTON COUNTY | GASTONIA

PLAN DATE: JULY 2004 | REVIEWED BY: T Lloyd

PREPARED BY: WILLIAM HAIRSTON | REVIEWED BY:

REVISIONS	INIT.	DATE

SEAL: NORTH CAROLINA PROFESSIONAL SEAL 022013 ENGINEER GEORGE C. BROWN

George C. Brown 8/4/04
SIGNATURE DATE

SIG. INVENTORY NO. 12-0012

11-AUG-2004 07:52
S:\Traffic\Signal\Joyce\U2408\12012_2004xxxx.dgn
$$$$lloyds

PROJECT REFERENCE NO.	SHEET NO.
U-2408	SIG. 11

RAILROAD PREEMPTION PROGRAMMING DETAIL

(program controller as shown below)

FROM MAIN MENU PRESS 'A' (PREEMPTION), THEN '1' (STANDARD PREEMPTIONS).

```
   PREEMPTION  #1  SETTINGS (NEXT:1-10)
INTERVAL/TIMING ¦  CLEAR/DWELL PHASES
  GRN YEL  RED  ¦123456789101112131415 16
1  18  4.0  2.0 ¦  X    X
2 255  0.0  0.0 ¦ X   X
3   0  0.0  0.0 ¦
4   0  0.0  0.0 ¦
5   0  0.0  0.0 ¦
EXIT CALLS      ¦
            OPTIONS
PRIORITY (Y/N TO SELECT) ............HIGH
DELAY TIMER (0-255 SEC) .............0
MIN GREEN BEFORE PRE (0= DEFAULT)....1
PED CLEAR BEFORE PRE (0= DEFAULT)....0
YELLOW CLEAR BEFORE PRE (0= DEFAULT).5.0
RED CLEAR BEFORE PRE (0= DEFAULT)....3.0
DWELL MIN TIMER (0-255 SEC) .........10
DWELL MAX TIMER (0=OFF,1-255MIN) ....0
DWELL HOLD-OVER TIMER (0-255) .......0
LATCH CALL? .........................N
LINK TO NEXT PREEMPT? ...............N
ENABLE BACKUP PROTECTION? ...........N
HOLD CLEAR 1 PHASES DURING DELAY? ...N
FAST GREEN FLASH DWELL PHASES? ......N
PED CLEARANCE THROUGH YELLOW? .......N
INHIBIT OVERLAP GREEN EXTENSION? ....N
SERVICE DURING SOFTWARE FLASH? ......N
REST IN RED DURING DWELL INTERVAL? ..N
FLASH DWELL INTERVAL? ...............N
ALLOW PEDS IN DWELL INTERVAL? .......N
RE-TIME DWELL INTERVAL? .............N
OVERLAPS:                ¦ABCDEFGHIJKLMNOP
DWELL INT FLASH YELLOW   ¦
OMIT OVERLAPS:           ¦
```

RAILROAD PREEMPTION WIRING DETAIL

(wire as shown below)

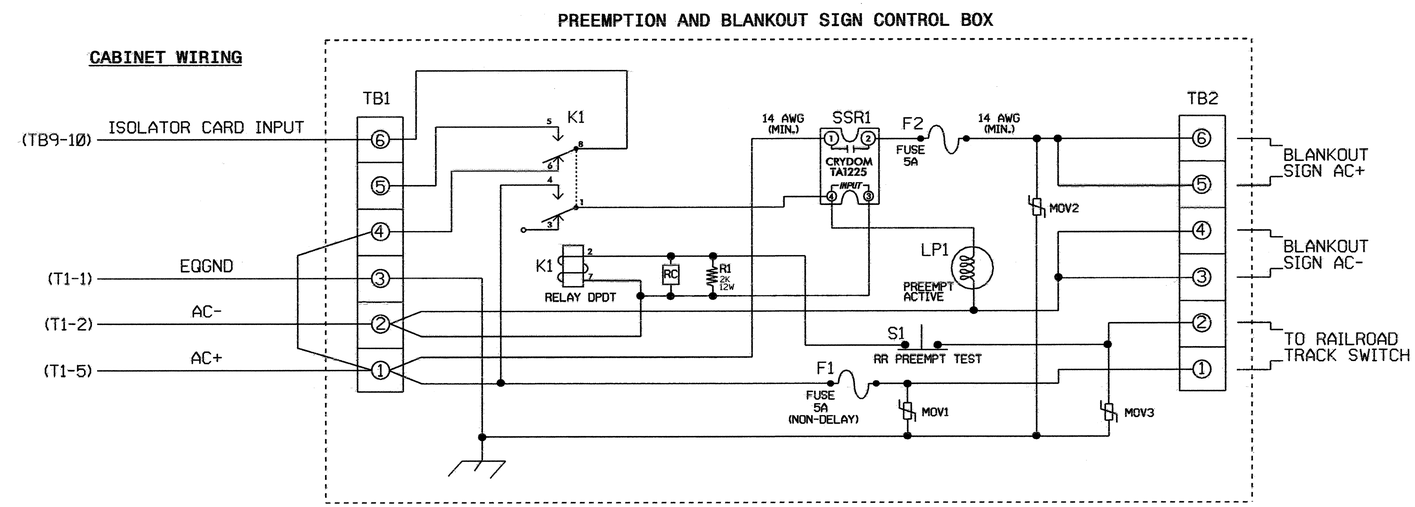

NOTES

1. RELAY K1 IS SHOWN IN THE ENERGIZED (PREEMPT NOT ACTIVE) NORMAL OPERATION STATE.
2. RELAY K1 IS A DPDT WITH 120VAC COIL. POTTER & BRUMFIELD KRP11AG WITH OCTAL BASE OR APPROVED EQUIVALENT.
3. RELAY SSR1 IS A SPST (NORMALLY OPEN) SOLID STATE RELAY WITH AC INPUT AND AC (25 AMP) OUTPUT. CRYDOM TA1225 OR APPROVED EQUIVALENT.
4. AC ISOLATOR CARD SHALL ACTIVATE PREEMPTION UPON REMOVAL OF AC+ FROM THE INPUT (AS SHOWN ABOVE).
5. RESISTOR IS VALUED AT 2K OHM, 12 WATT. CLAROSTAT PART NO. VPR10F-2K OR APPROVED EQUIVALENT.
6. RC NETWORK IS VALUED AT .1 MICROFARAD, 100 OHM.
7. IF REPLACEMENT MOVS ARE NEEDED, GE PART NO. V150LA20A MAY BE USED.
8. PREEMPTION AND BLANKOUT SIGN CONTROL BOX IS A CONTROL TECHNOLOGIES PART NO. 2299-101 OR APPROVED EQUIVALENT.
9. IMPORTANT!! A JUMPER MUST BE ADDED BETWEEN INPUT FILE TERMINALS J14-E AND J14-K IF NOT ALREADY PRESENT. ALSO, TERMINAL TB9-12 (ON INPUT PANEL) SHALL BE CONNECTED TO AC NEUTRAL (JUMPER MAY HAVE TO BE ADDED).

FRONT VIEW

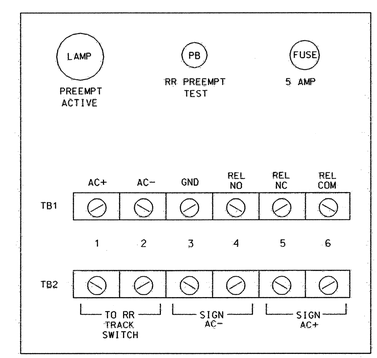

THIS ELECTRICAL DETAIL IS FOR
THE SIGNAL DESIGN: 12-0012
DESIGNED: 10/30/03
SEALED: 08/09/04
REVISED:

SIGNAL UPGRADE - FINAL DESIGN - SHEET 2 OF 2

ELECTRICAL AND PROGRAMMING DETAILS FOR:

Prepared in the Offices of:
Traffic Engineering and Safety Systems Branch
Traffic Engineering Division
Department of Transportation
Signal Management Section
122 N. McDowell St., Raleigh, NC 27603

NC 274 (BESSEMER CITY ROAD) AT NC 275 (DALLAS-BESSEMER CITY ROAD) AND SR 1312 (OATES ROAD)

DIVISION 12 GASTON COUNTY GASTONIA

PLAN DATE: JULY 2004 REVIEWED BY: T Joyce

PREPARED BY: WILLIAM HAIRSTON REVIEWED BY:

REVISIONS	INIT.	DATE

SEAL

NORTH CAROLINA PROFESSIONAL SEAL 022013 ENGINEER GEORGE C. BROWN

George C. Brown 8/16/04
SIGNATURE DATE

SIG. INVENTORY NO. 12-0012

11-AUG-2004 07:54
S:\HS\pdgm*\Joyce\#U2408\#12012_2004xxxx.dgn
#joyce

METRIC	PROJECT REFERENCE NO.	SHEET NO.
	U-2408	SIG. 12

PHASING DIAGRAM

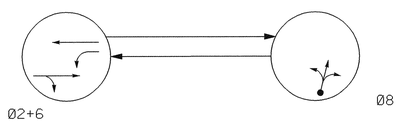

PHASING DIAGRAM DETECTION LEGEND

- DETECTED MOVEMENT
- UNDETECTED MOVEMENT (OVERLAP)
- UNSIGNALIZED MOVEMENT
- PEDESTRIAN MOVEMENT

TABLE OF OPERATION

SIGNAL FACE	PHASE 02+6	PHASE 04+8	FLASH
21	G	R	Y
22	G	R	Y
61	G	R	Y
62	G	R	Y
81	R	G	R
82	R	G	R

SIGNAL FACE I.D.

Denotes L.E.D.

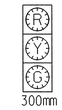

21, 22
61, 62
81, 82

PLAN QUANTITIES

Pay Item	Meters
Signal Cable	175
Messenger Cable	120
Loop Lead-in Cable	50

2 PHASE
SEMI ACTUATED
ISOLATED

NOTES

1. Refer to "Roadway Standard Drawings NCDOT" dated January 2002 and "Standard Specifications for Roads and Structures" dated January 2002.
2. Set all detector units to presence mode.
3. Do not program signal for late night flashing operation unless otherwise directed by the engineer.

LEGEND

PROPOSED		EXISTING
	Traffic Signal Head	
	Modified Signal Head	N/A
	Sign	
	Pedestrian Signal Head With Push Button & Sign	
	Signal Pole with Guy	
	Signal Pole with Sidewalk Guy	
	Inductive Loop Detector	
	Controller & Cabinet	
	Junction Box	
	50mm Underground Conduit	
N/A	Right of Way with Marker	
	Directional Arrow	
	Pavement Marking Arrow	
	Construction Zone	

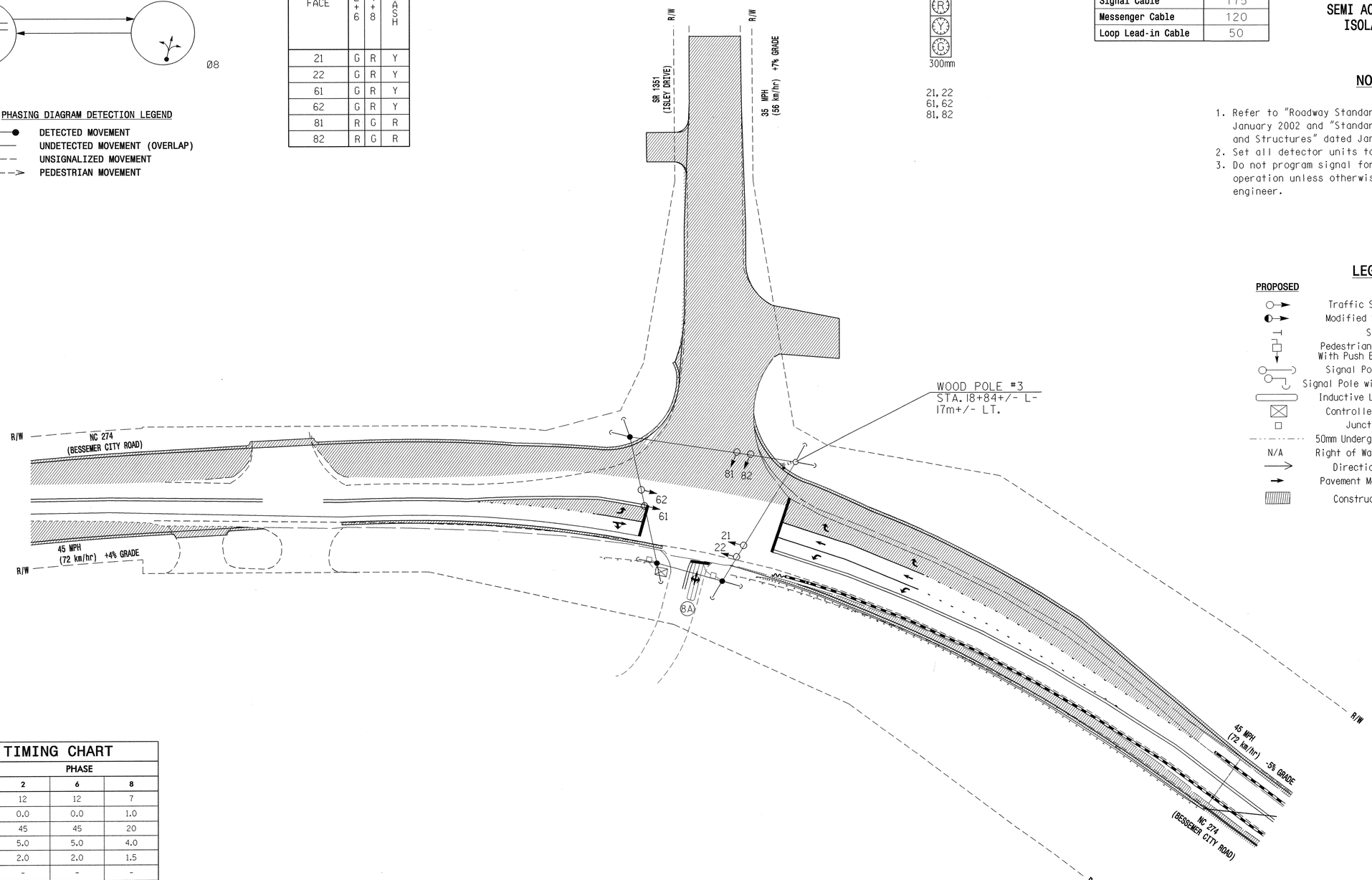

2070L TIMING CHART

FEATURE	PHASE 2	PHASE 6	PHASE 8
Min Green 1 *	12	12	7
Extension 1 *	0.0	0.0	1.0
Max Green 1 *	45	45	20
Yellow Clearance	5.0	5.0	4.0
Red Clearance	2.0	2.0	1.5
Walk 1 *	-	-	-
Don't Walk 1	-	-	-
Seconds Per Actuation *	-	-	-
Max Variable Initial *	-	-	-
Time Before Reduction *	-	-	-
Time To Reduce *	-	-	-
Minimum Gap	-	-	-
Recall Mode	MAX RECALL	MAX RECALL	-
Vehicle Call Memory	YELLOW	YELLOW	-
Dual Entry	-	-	-
Simultaneous Gap	ON	ON	ON

* These values may be field adjusted. Do not adjust Min Green and Extension times for phases 2 and 6 lower than what is shown. Min Green for all other phases should not be lower than 4 seconds.

2070L LOOP & DETECTOR INSTALLATION

INDUCTIVE LOOPS					DETECTOR PROGRAMMING							
LOOP	SIZE (m)	TURNS	DISTANCE FROM STOPBAR (m)	NEW LOOP	PHASE	CALLING	EXTENSION	FULL TIME DELAY	SYSTEM LOOP	STRETCH TIME	DELAY TIME	NEW CARD
8A	1.8 X 9	2-4-2	0	Y	8	Y	Y	-	-	-	10	Y

Prepared in the Office of:

THE LPA GROUP
TRANSPORTATION CONSULTANTS
THE LPA GROUP of North Carolina, p.a.
4904 PROFESSIONAL COURT, SUITE 201
Raleigh, North Carolina 27609

SIGNAL UPGRADE - TEMPORARY DESIGN 1

Traffic Engineering and Safety Systems Branch
STATE OF NORTH CAROLINA DEPARTMENT OF TRANSPORTATION
Signals and Geometrics Section

SCALE 5 0 10
1:500

N.C. 274 (BESSEMER CITY ROAD)
AT
SR 1351 (ISLEY DRIVE)

DIVISION 12 GASTON COUNTY GASTONIA

PLAN DATE: OCT. 30, 2003 REVIEWED BY: R.DUBNICKA, P.E.

PREPARED BY: RGL REVIEWED BY:

REVISIONS	INIT.	DATE

SEAL
NORTH CAROLINA PROFESSIONAL SEAL 027742 ENGINEER ROBERT J. DUBNICKA

SIGNATURE Robert J. Dubnicka DATE 8-9-04

SIG. INVENTORY NO. 12-0234T1

09-AUG-2004 12:28
Y:\Traffic\U2408\Signal Plans\SIG-2.dgn
rdubnicka

PROJECT REFERENCE NO.	SHEET NO.
U-2408	SIG.13

EDI MODEL 2010ECL CONFLICT MONITOR
PROGRAMMING DETAIL

(remove jumper and set switches as shown)

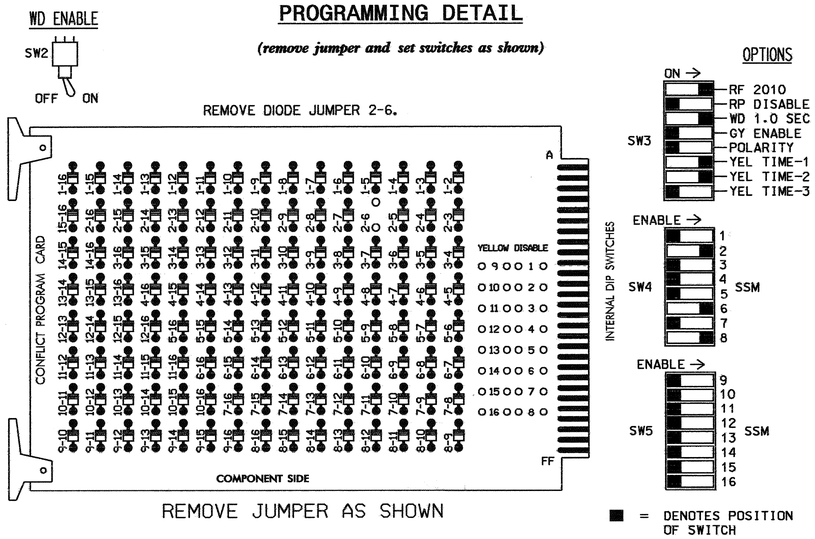

REMOVE JUMPER AS SHOWN

■ = DENOTES POSITION OF SWITCH

NOTES:

1. CARD IS PROVIDED WITH ALL DIODE JUMPERS IN PLACE. REMOVAL OF ANY JUMPER ALLOWS ITS CHANNELS TO RUN CONCURRENTLY.
2. MAKE SURE JUMPERS SEL1-SEL5 ARE PRESENT ON THE MONITOR BOARD.

NOTES

1. TO PREVENT "FLASH-CONFLICT" PROBLEMS, INSERT RED FLASH PROGRAM BLOCKS FOR ALL UNUSED VEHICLE LOAD SWITCHES IN THE OUTPUT FILE. THE INSTALLER SHALL VERIFY THAT SIGNAL HEADS FLASH IN ACCORDANCE WITH THE SIGNAL PLANS.
2. ENSURE THAT RED ENABLE IS ACTIVE AT ALL TIMES DURING NORMAL OPERATION. TO PREVENT RED FAILURES ON UNUSED MONITOR CHANNELS, TIE UNUSED RED MONITOR INPUTS 1,3,4, 5,7,9,10,11,12,13,14,15 & 16 TO LOAD SWITCH AC+ PER THE CABINET MANUFACTURER'S INSTRUCTIONS.
3. PROGRAM CONTROLLER TO START UP IN PHASES 2 AND 6 GREEN.
4. ENABLE SIMULTANEOUS GAP-OUT FEATURE, ON CONTROLLER UNIT, FOR ALL PHASES.

EQUIPMENT INFORMATION

CONTROLLER.....CONTRACTOR SUPPLIED 2070L
CABINET .....CONTRACTOR SUPPLIED 332
SOFTWARE .....ECONOLITE OASIS
CABINET MOUNT.....BASE
OUTPUT FILE POSITIONS...12
LOAD SWITCHES USED.....S2,S6,S8
PHASES USED.....2,6,8
OVERLAPS.....NONE

FIELD CONNECTION HOOK-UP CHART

LOAD SWITCH NO.	S1	S2	S2P	S3	S4	S4P	S5	S6	S6P	S7	S8	S8P
PHASE	1	2	2 PED	3	4	4 PED	5	6	6 PED	7	8	8 PED
SIGNAL HEAD NO.	NU	21,22	NU	NU	NU	NU	NU	61,62	NU	NU	81,82	NU
GREEN		130						136			109	
YELLOW		129						135			108	
RED		128						134			107	
RED ARROW												
YELLOW ARROW												
GREEN ARROW												

NU = NOT USED

INPUT FILE POSITION LAYOUT

(front view)

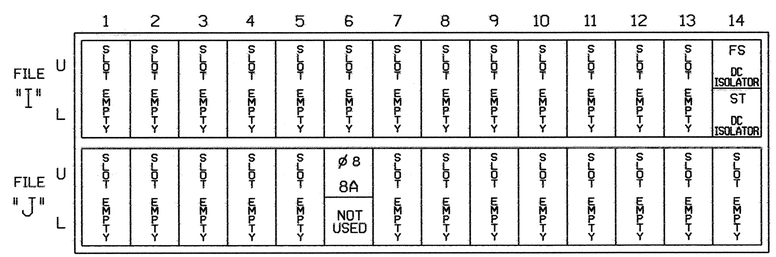

EX.: 1A, 2A, ETC. = LOOP NO.'S

FS = FLASH SENSE
ST = STOP TIME

INPUT FILE CONNECTION & PROGRAMMING CHART

LOOP NO.	LOOP TERMINAL	INPUT FILE POS.	PIN NO.	INPUT ASSIGNMENT NO.	DETECTOR NO.	NEMA PHASE	CALL	EXTEND	FULL TIME DELAY	STRETCH TIME	DELAY TIME
8A	TB5-9,10	J6U	42	4	8	8	Y	Y			10

INPUT FILE POSITION LEGEND: J2L
FILE J
SLOT 2
LOWER

THIS ELECTRICAL DETAIL IS FOR
THE SIGNAL DESIGN: 12-0234T1
DESIGNED: 10/30/03
SEALED: 08/09/04
REVISED:

SIGNAL UPGRADE - TEMPORARY DESIGN 1

ELECTRICAL AND PROGRAMMING DETAILS FOR:

Prepared in the Offices of:
Traffic Engineering and Safety Systems Branch
STATE OF NORTH CAROLINA DEPARTMENT OF TRANSPORTATION
Signals Management Section
122 N. McDowell St., Raleigh, NC 27603

NC 274 (BESSEMER CITY ROAD)
AT
SR 1351 (ISLEY DRIVE)

DIVISION 12 GASTON COUNTY GASTONIA

PLAN DATE: JULY 2004 REVIEWED BY: TJ
PREPARED BY: WILLIAM HAIRSTON REVIEWED BY:

REVISIONS	INIT.	DATE

SEAL
NORTH CAROLINA PROFESSIONAL SEAL 022013 ENGINEER GEORGE C. BROWN
SIGNATURE DATE
SIG. INVENTORY NO. 12-0234T1

10-AUG-2004 15:24
S:\Sig\dgn*TJoyce\U2408\12034_2004xxxxa.dgn
Fl 05B

METRIC	PROJECT REFERENCE NO.	SHEET NO.
	U-2408	SIG. 14

PHASING DIAGRAM

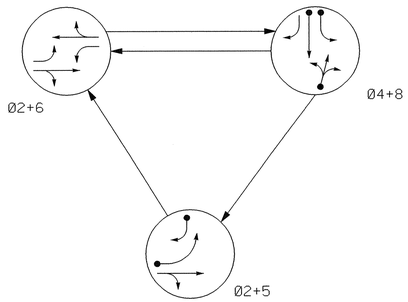

PHASING DIAGRAM DETECTION LEGEND

- DETECTED MOVEMENT
- UNDETECTED MOVEMENT (OVERLAP)
- UNSIGNALIZED MOVEMENT
- PEDESTRIAN MOVEMENT

TABLE OF OPERATION

SIGNAL FACE	PHASE 02+5	PHASE 02+6	PHASE 04+8	FLASH
21	G	G	R	Y
22	G	G	R	Y
41	R	R	G	R
42	R	R	G	R
43	R	R	G	R
61,62	R	G	R	Y
81,82	R	R	G	R

SIGNAL FACE I.D.

Denotes L.E.D.

PLAN QUANTITIES

Pay Item	Meters
Signal Cable	60
Messenger Cable	0
Loop Lead-in Cable	190

3 PHASE
SEMI ACTUATED
ISOLATED

NOTES

1. Refer to "Roadway Standard Drawings NCDOT" dated January 2002 and "Standard Specifications for Roads and Structures" dated January 2002.
2. Omit Phase 5 during Phase 6 on.
3. Program controller to clear from phase 2+6 to phase 5 by progressing through phase 4+8 (see Electrical Details).
4. Set all detector units to presence mode.
5. Reposition existing signal heads numbered #61 and 62.
6. Do not program signal for late night flashing operation unless otherwise directed by the Engineer.

LEGEND

PROPOSED		EXISTING
	Traffic Signal Head	
	Modified Signal Head	N/A
	Sign	
	Pedestrian Signal Head With Push Button & Sign	
	Signal Pole with Guy	
	Signal Pole with Sidewalk Guy	
	Inductive Loop Detector	
	Controller & Cabinet	
	Junction Box	
	50mm Underground Conduit	
N/A	Right of Way with Marker	
	Directional Arrow	
	Pavement Marking Arrow	

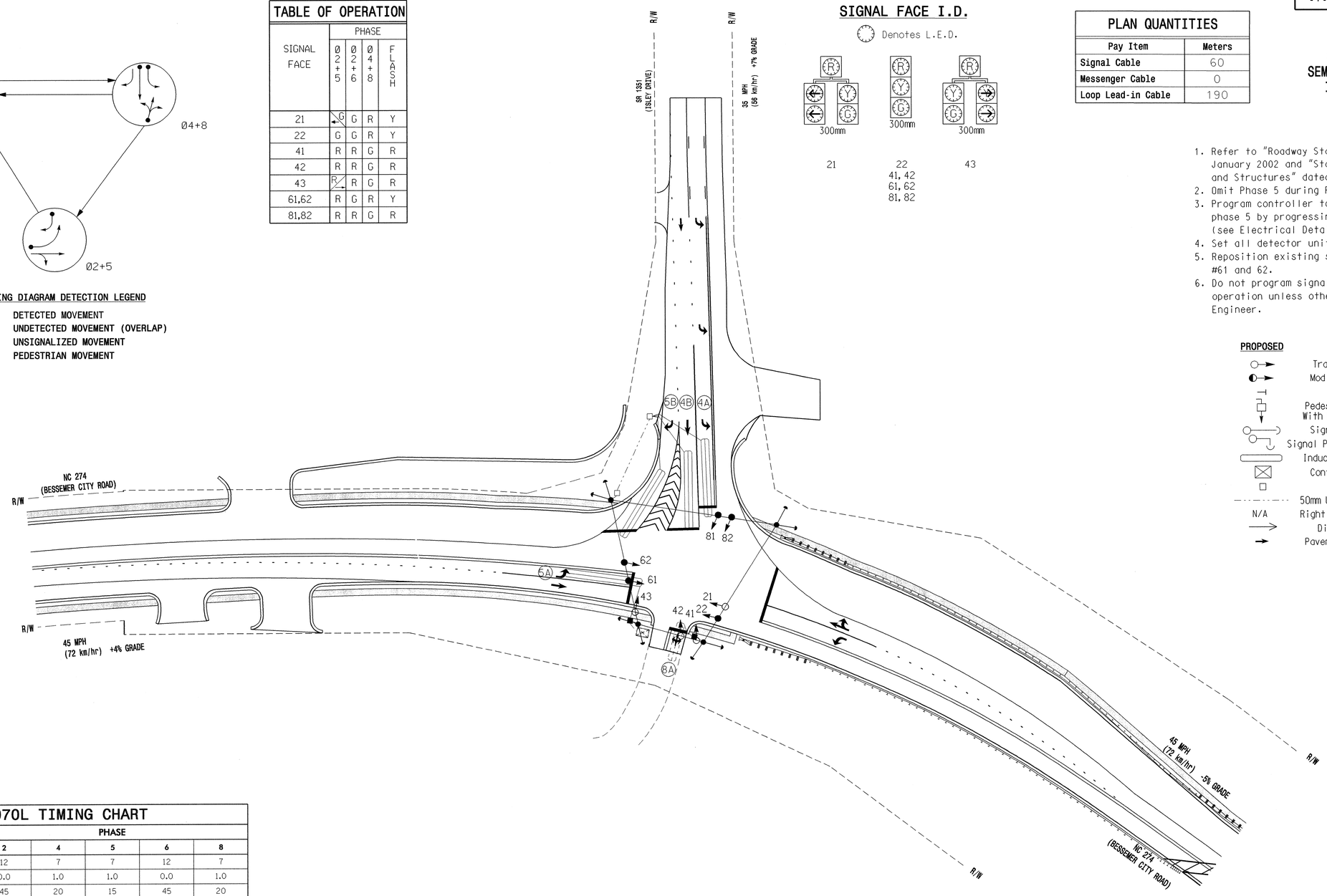

2070L TIMING CHART

FEATURE	PHASE 2	PHASE 4	PHASE 5	PHASE 6	PHASE 8
Min Green 1 *	12	7	7	12	7
Extension 1 *	0.0	1.0	1.0	0.0	1.0
Max Green 1 *	45	20	15	45	20
Yellow Clearance	5.0	4.0	4.0	5.0	4.0
Red Clearance	2.0	2.5	2.0	2.0	2.5
Walk 1 *	-	-	-	-	-
Don't Walk 1	-	-	-	-	-
Seconds Per Actuation *	-	-	-	-	-
Max Variable Initial *	-	-	-	-	-
Time Before Reduction *	-	-	-	-	-
Time To Reduce *	-	-	-	-	-
Minimum Gap	-	-	-	-	-
Recall Mode	MAX RECALL	-	-	MAX RECALL	-
Vehicle Call Memory	YELLOW	-	-	YELLOW	-
Dual Entry	-	ON	-	-	ON
Simultaneous Gap	ON	ON	ON	ON	ON

* These values may be field adjusted. Do not adjust Min Green and Extension times for phases 2 and 6 lower than what is shown. Min Green for all other phases should not be lower than 4 seconds.

2070L LOOP & DETECTOR INSTALLATION

INDUCTIVE LOOPS					DETECTOR PROGRAMMING							
LOOP	SIZE (m)	TURNS	DISTANCE FROM STOPBAR (m)	NEW LOOP	PHASE	CALLING	EXTENSION	FULL TIME DELAY	SYSTEM LOOP	STRETCH TIME	DELAY TIME	NEW CARD
4A	1.8 X 18	2-4-2	+2	Y	4	Y	Y	-	-	-	3	Y
4B	1.8 X 18	2-4-2	0	Y	4	Y	Y	-	-	-	-	Y
5A	1.8 X 18	2-4-2	+2	Y	5	Y	Y	-	-	-	15	Y
5B	1.8 X 18	2-4-2	+1	Y	5	Y	Y	-	-	-	15	Y
8A	1.8 X 9	2-4-2	+1	-	8	Y	Y	-	-	-	10	-

Prepared in the Office of:

THE LPA GROUP
TRANSPORTATION CONSULTANTS
THE LPA GROUP of North Carolina, p.a.
4904 PROFESSIONAL COURT, SUITE 201
Raleigh, North Carolina 27609

SIGNAL UPGRADE - TEMPORARY DESIGN 2

Traffic Engineering and Safety Systems Branch
Signals and Geometrics Section
STATE OF NORTH CAROLINA DEPARTMENT OF TRANSPORTATION

SCALE 1:500

N.C. 274 (BESSEMER CITY ROAD)
AT
SR 1351 (ISLEY DRIVE)

DIVISION 12 GASTON COUNTY GASTONIA

PLAN DATE:	OCT. 30,2003	REVIEWED BY:	R.DUBNICKA,P.E.
PREPARED BY:	RGL	REVIEWED BY:	

REVISIONS	INIT.	DATE

SEAL
NORTH CAROLINA PROFESSIONAL SEAL 027742 ENGINEER ROBERT J. DUBNICKA

SIGNATURE Robert J. Dubnicka DATE 8-9-04

SIG. INVENTORY NO. 12-0234T2

09-AUG-2004 12:28
T:\Traffic\U2408\Signal Plans\SIG-2A.dgn
robertdub

PROJECT REFERENCE NO.	SHEET NO.
U-2408	SIG. 15

EDI MODEL 2010ECL CONFLICT MONITOR PROGRAMMING DETAIL

(remove jumpers and set switches as shown)

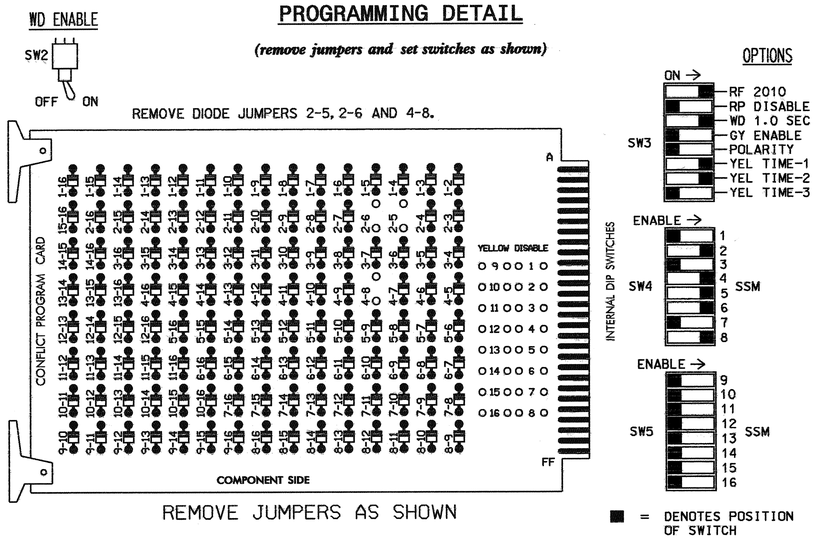

REMOVE JUMPERS AS SHOWN

NOTES:

1. CARD IS PROVIDED WITH ALL DIODE JUMPERS IN PLACE. REMOVAL OF ANY JUMPER ALLOWS ITS CHANNELS TO RUN CONCURRENTLY.
2. MAKE SURE JUMPERS SEL1-SEL5 ARE PRESENT ON THE MONITOR BOARD.

NOTES

1. TO PREVENT "FLASH-CONFLICT" PROBLEMS, INSERT RED FLASH PROGRAM BLOCKS FOR ALL UNUSED VEHICLE LOAD SWITCHES IN THE OUTPUT FILE. THE INSTALLER SHALL VERIFY THAT SIGNAL HEADS FLASH IN ACCORDANCE WITH THE SIGNAL PLANS.
2. ENSURE THAT RED ENABLE IS ACTIVE AT ALL TIMES DURING NORMAL OPERATION. TO PREVENT RED FAILURES ON UNUSED MONITOR CHANNELS, TIE UNUSED RED MONITOR INPUTS 1,3,7, 9,10,11,12,13,14,15 & 16 TO LOAD SWITCH AC+ PER THE CABINET MANUFACTURER'S INSTRUCTIONS.
3. PROGRAM CONTROLLER TO START UP IN PHASES 2 AND 6 GREEN.
4. ENABLE SIMULTANEOUS GAP-OUT FEATURE, ON CONTROLLER UNIT, FOR ALL PHASES.
5. PROGRAM PHASES 4 AND 8, ON CONTROLLER UNIT, FOR DUAL ENTRY.

EQUIPMENT INFORMATION

CONTROLLER.....CONTRACTOR SUPPLIED 2070L
CABINET .....CONTRACTOR SUPPLIED 332
SOFTWARE .....ECONOLITE OASIS
CABINET MOUNT.....BASE
OUTPUT FILE POSITIONS...12
LOAD SWITCHES USED.....S2,S4,S5,S6,S8
PHASES USED.....2,4,5,6,8
OVERLAPS.....NONE

FIELD CONNECTION HOOK-UP CHART

LOAD SWITCH NO.	S1	S2	S2P	S3	S4	S4P	S5	S6	S6P	S7	S8	S8P
PHASE	1	2	2 PED	3	4	4 PED	5	6	6 PED	7	8	8 PED
SIGNAL HEAD NO.	NU	21,22	NU	NU	41 42,43	NU	21,43	61,62	NU	NU	81,82	NU
GREEN		130			103			136			109	
YELLOW		129			102			135			108	
RED		128			101		*	134			107	
RED ARROW												
YELLOW ARROW							132					
GREEN ARROW							133					

NU = NOT USED

* DENOTES INSTALL LOAD RESISTOR. SEE LOAD RESISTOR INSTALLATION DETAIL THIS PAGE.

BACK-UP PROTECTION PROGRAMMING DETAIL

(program controller as shown below)

1. FROM MAIN MENU PRESS '2' (PHASE CONTROL), THEN '1' (PHASE CONTROL FUNCTIONS). SCROLL TO THE BOTTOM OF THE MENU AND ENABLE DYNAMIC/BACKUP CONTROL FUNCTION 1.
2. FROM PHASE CONTROL FUNCTIONS MENU PRESS '2' (DYNAMIC/BACKUP CONTROL FUNCTIONS).

```
DYNAMIC/BACKUP CONTROL FUNCTION #01
                 OVERLAPS:¦ABCDEFGHIJKLMNOP
IF OVERLAPS ARE ACTIVE ¦
OR        PHASES:¦123456789101112131415 16
IF PHASES ARE ON¦     X
OMIT PHASES     ¦    X
CALL PHASES     ¦   X
```

BACKUP PROTECTION PROGRAMMING COMPLETE

INPUT FILE POSITION LAYOUT

(front view)

		1	2	3	4	5	6	7	8	9	10	11	12	13	14
FILE "I"	U	SLOT	SLOT	SLOT	SLOT	SLOT	ø4 4A	SLOT	SLOT	SLOT	SLOT	SLOT	SLOT	SLOT	FS DC ISOLATOR
	L	EMPTY	EMPTY	EMPTY	EMPTY	EMPTY	ø4 4B	EMPTY	EMPTY	EMPTY	EMPTY	EMPTY	EMPTY	EMPTY	ST DC ISOLATOR
FILE "J"	U	ø5 5B	ø5 5A	SLOT	SLOT	SLOT	ø8 8A	SLOT	SLOT	SLOT	SLOT	SLOT	SLOT	SLOT	SLOT
	L	NOT USED	NOT USED	EMPTY	EMPTY	EMPTY	NOT USED	EMPTY	EMPTY	EMPTY	EMPTY	EMPTY	EMPTY	EMPTY	EMPTY

EX.: 1A, 2A, ETC. = LOOP NO.'S

FS = FLASH SENSE
ST = STOP TIME

INPUT FILE CONNECTION & PROGRAMMING CHART

LOOP NO.	LOOP TERMINAL	INPUT FILE POS.	PIN NO.	INPUT ASSIGNMENT NO.	DETECTOR NO.	NEMA PHASE	CALL	EXTEND	FULL TIME DELAY	STRETCH TIME	DELAY TIME
4A	TB4-9,10	I6U	41	3	4	4	Y	Y			3
4B	TB4-11,12	I6L	45	7	14	4	Y	Y			
5B	TB3-1,2	J1U	55	17	5	5	Y	Y			15
5A	TB3-5,6	J2U	40	2	6	5	Y	Y			15
8A	TB5-9,10	J6U	42	4	8	8	Y	Y			10

INPUT FILE POSITION LEGEND: J2L

FILE J
SLOT 2
LOWER

LOAD RESISTOR INSTALLATION DETAIL

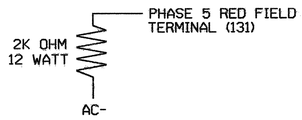

NOTE: THE PURPOSE OF THIS RESISTOR IS TO LOAD THE CHANNEL RED MONITOR INPUT IN ORDER FOR THE SIGNAL SEQUENCE MONITOR TO USE THE FULL SIGNAL SEQUENCE MONITORING CAPABILITY ON CHANNELS THAT DO NOT USE THE RED DISPLAY IN THE FIELD.

THIS ELECTRICAL DETAIL IS FOR
THE SIGNAL DESIGN: 12-0234T2
DESIGNED: 10/30/03
SEALED: 08/09/04
REVISED:

SIGNAL UPGRADE - TEMPORARY DESIGN 2

ELECTRICAL AND PROGRAMMING DETAILS FOR:

Prepared in the Offices of:
Traffic Engineering and Safety Systems Branch
Signals Management Section
NORTH CAROLINA DEPARTMENT OF TRANSPORTATION
122 N. McDowell St., Raleigh, NC 27603

NC 274 (BESSEMER CITY ROAD) AT SR 1351 (ISLEY DRIVE)

DIVISION 12 | GASTON COUNTY | GASTONIA

PLAN DATE: JULY 2004 | REVIEWED BY: T. Lloyd

PREPARED BY: WILLIAM HAIRSTON | REVIEWED BY:

REVISIONS	INIT.	DATE

SEAL

NORTH CAROLINA PROFESSIONAL SEAL 022013 ENGINEER GEORGE C. BROWN

George C. Brown 8/11/04
SIGNATURE DATE

SIG. INVENTORY NO. 12-0234T2

10-AUG-2004 15:26
S:\MS\Sigmgmt\Lloyce\U2408\12034_2004xxxx.dgn
T.Lloyd

METRIC	PROJECT REFERENCE NO.	SHEET NO.
	U-2408	SIG. 16

4 PHASE
FULLY ACTUATED
GASTONIA CITY SIGNAL SYSTEM

PHASING DIAGRAM

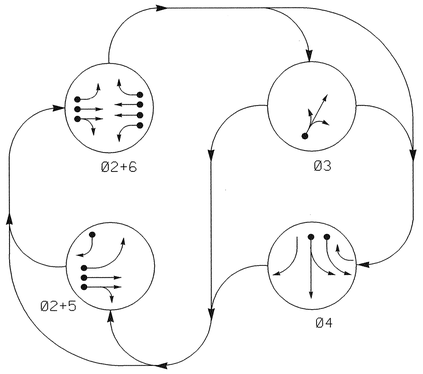

TABLE OF OPERATION

SIGNAL FACE	PHASE Ø2+5	Ø2+6	Ø3	Ø4	FLASH
21	G	G	R	R	Y
22	G	G	R	R	Y
31	R	R	G	R	R
32	R	R	G	R	R
41	R	R	R	G	R
42	R	R	R	G	R
43	R	R	R	G	R
61,62	R	G	R	R	Y
63	R	G	R	R	Y

SIGNAL FACE I.D.

Denotes L.E.D.

21 | 31, 41 | 22, 32, 42, 61, 62 | 43, 63

PLAN QUANTITIES

Pay Item	Meters
Signal Cable	270
Messenger Cable	0
Loop Lead-in Cable	975

NOTES

1. Refer to "Roadway Standard Drawings NCDOT" dated January 2002 and "Standard Specifications for Roads and Structures" dated January 2002.
2. Omit Phase 5 during Phase 6 on.
3. Program controller to clear from phase 2+6 to phase 5 by progressing through phase 4 (see Electrical Details).
4. Set all detector units to presence mode.
5. Maximum times shown in timing chart are for free run operation only. Coordinated signal system timing values shall supersede these values.
6. System data: Controller Asset: 0234
7. During coordination, the order of phase 3 and 4 may be reversed.
8. Do not program signal for late night flashing operation unless otherwise directed by the engineer.

PHASING DIAGRAM DETECTION LEGEND

- DETECTED MOVEMENT
- UNDETECTED MOVEMENT (OVERLAP)
- UNSIGNALIZED MOVEMENT
- PEDESTRIAN MOVEMENT

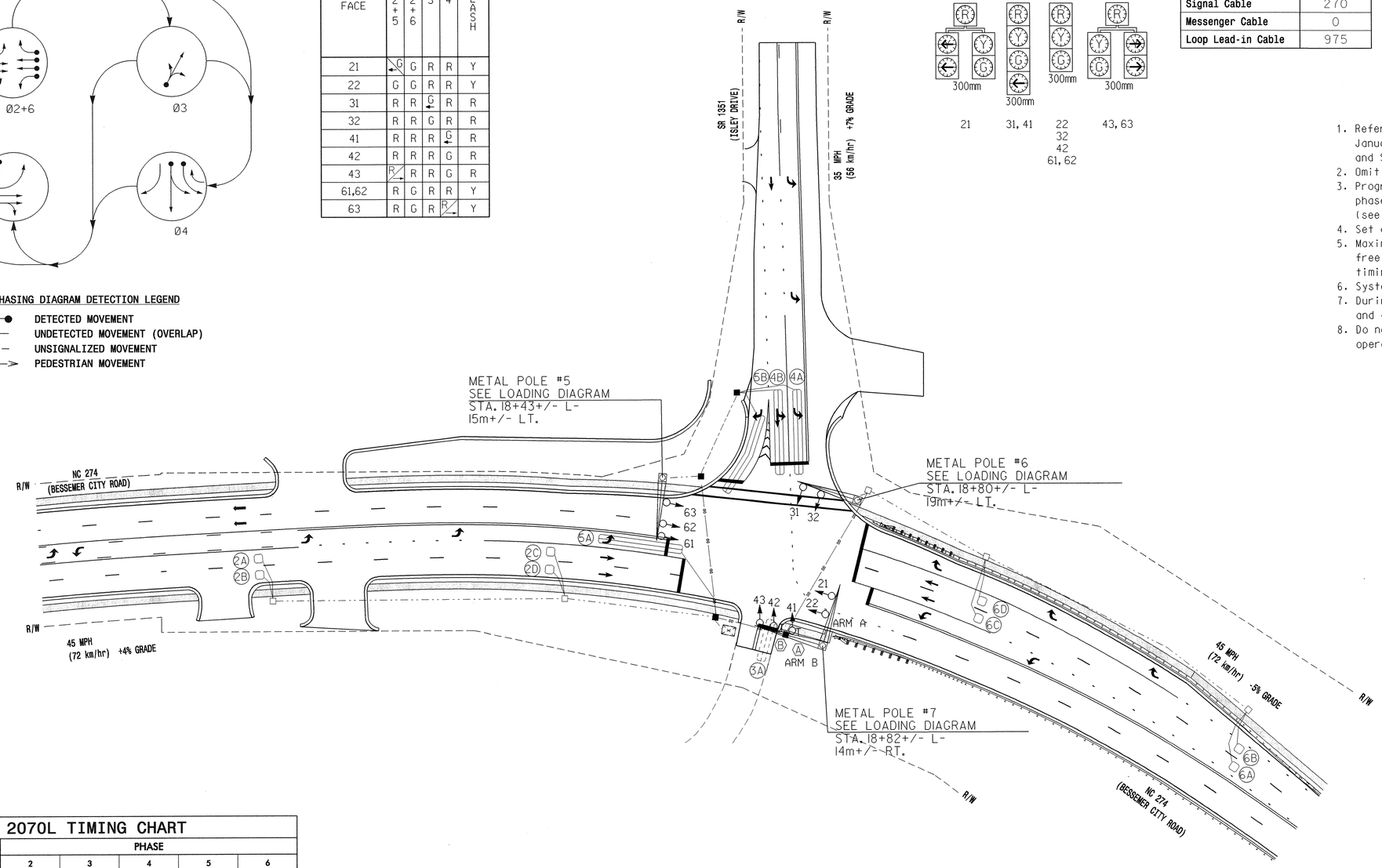

LEGEND

PROPOSED		EXISTING
	Traffic Signal Head	
	Modified Signal Head	N/A
	Sign	
	Pedestrian Signal Head With Push Button & Sign	
	Signal Pole with Guy	
	Signal Pole with Sidewalk Guy	
	Inductive Loop Detector	
	Controller & Cabinet	
	Junction Box	
	50mm Underground Conduit	
N/A	Right of Way with Marker	
	Directional Arrow	
	Pavement Marking Arrow	
	Metal Pole with Mast Arm	
A	Left Arrow "ONLY" Sign (R3-5L)	A
B	Combined Through and Left Arrow Sign (R3-6L)	B
	Directional Drill	
	2 - 50mm Polyethylene Conduit	N/A

2070L TIMING CHART

FEATURE	PHASE 2	3	4	5	6
Min Green 1 *	12	7	7	7	12
Extension 1 *	2.0	1.0	1.0	1.0	2.0
Max Green 1 *	45	20	20	15	45
Yellow Clearance	5.0	4.0	4.0	4.0	5.0
Red Clearance	2.0	2.0	3.0	3.0	2.0
Walk 1 *	-	-	-	-	-
Don't Walk 1	-	-	-	-	-
Seconds Per Actuation *	-	-	-	-	-
Max Variable Initial *	-	-	-	-	-
Time Before Reduction *	-	-	-	-	-
Time To Reduce *	-	-	-	-	-
Minimum Gap	-	-	-	-	-
Recall Mode	MIN RECALL	-	-	-	MIN RECALL
Vehicle Call Memory	YELLOW	-	-	-	YELLOW
Dual Entry	-	-	-	-	-
Simultaneous Gap	ON	ON	ON	ON	ON

* These values may be field adjusted. Do not adjust Min Green and Extension times for phases 2 and 6 lower than what is shown. Min Green for all other phases should not be lower than 4 seconds.

2070L LOOP & DETECTOR INSTALLATION

INDUCTIVE LOOPS					DETECTOR PROGRAMMING						
LOOP	SIZE (m)	TURNS	DISTANCE FROM STOPBAR (m)	NEW LOOP	PHASE	CALLING	EXTENSION	FULL TIME DELAY	SYSTEM LOOP	STRETCH TIME	DELAY TIME	NEW CARD
2A,2B	1.8 X 1.8	4	90	Y	2	Y	Y	-	-	1.8	-	Y
2C,2D	1.8 X 1.8	4	27	Y	2	Y	Y	-	-	-	-	Y
3A	1.8 X 9	2-4-2	+1	-	3	Y	Y	-	-	-	10	-
4A	1.8 X 18	2-4-2	+2	Y	4	Y	Y	-	-	-	3	-
4B	1.8 X 18	2-4-2	+2	Y	4	Y	Y	-	-	-	3	-
5A	1.8 X 18	2-4-2	+2	Y	5	Y	Y	-	-	-	15	-
					2	Y	Y	-	-	-	-	Y
5B	1.8 X 18	+2	+2	Y	5	Y	Y	-	-	-	15	-
6A,6B	1.8 X 1.8	5	90	Y	6	Y	Y	-	-	1.8	-	Y
6C,6D	1.8 X 1.8	4	27	Y	6	Y	Y	-	-	-	-	Y

Prepared in the Office of:

THE LPA GROUP TRANSPORTATION CONSULTANTS

THE LPA GROUP of North Carolina, p.a.
4904 PROFESSIONAL COURT, SUITE 201
Raleigh, North Carolina 27609

SIGNAL UPGRADE - FINAL DESIGN

Traffic Engineering and Safety Systems Branch — Signals and Geometrics Section — Department of Transportation — State of North Carolina

SCALE 5 0 10 — 1:500

N.C. 274 (BESSEMER CITY ROAD)
AT
SR 1351 (ISLEY DRIVE)

DIVISON 12 GASTON COUNTY GASTONIA

PLAN DATE:	OCT. 30, 2003	REVIEWED BY:	R.DUBNICKA, P.E.
PREPARED BY:	RGL	REVIEWED BY:	

REVISIONS	INIT.	DATE

SEAL — NORTH CAROLINA PROFESSIONAL SEAL 027742 ENGINEER ROBERT J. DUBNICKA

SIGNATURE Robert J. Dubnicka DATE 8-9-04

SIG. INVENTORY NO. 12-0234

09-AUG-2004 12:28
r:\traffic\projects\u2408\signal Plans\SIG-2B.dgn
rdubnicka

PROJECT REFERENCE NO.	SHEET NO.
U-2408	SIG. 17

EDI MODEL 2010ECL CONFLICT MONITOR PROGRAMMING DETAIL

(remove jumpers and set switches as shown)

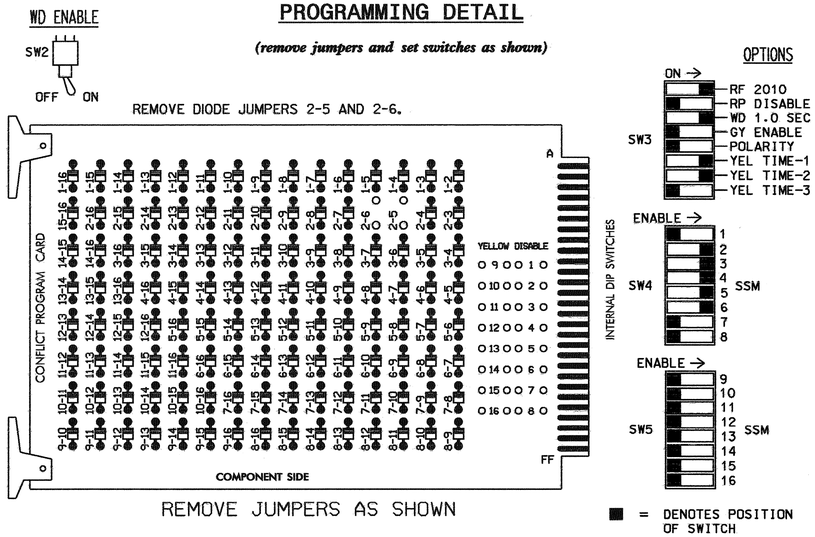

REMOVE JUMPERS AS SHOWN

NOTES:

1. CARD IS PROVIDED WITH ALL DIODE JUMPERS IN PLACE. REMOVAL OF ANY JUMPER ALLOWS ITS CHANNELS TO RUN CONCURRENTLY.
2. MAKE SURE JUMPERS SEL1-SEL5 ARE PRESENT ON THE MONITOR BOARD.

NOTES

1. TO PREVENT "FLASH-CONFLICT" PROBLEMS, INSERT RED FLASH PROGRAM BLOCKS FOR ALL UNUSED VEHICLE LOAD SWITCHES IN THE OUTPUT FILE. THE INSTALLER SHALL VERIFY THAT SIGNAL HEADS FLASH IN ACCORDANCE WITH THE SIGNAL PLANS.
2. ENSURE THAT RED ENABLE IS ACTIVE AT ALL TIMES DURING NORMAL OPERATION. TO PREVENT RED FAILURES ON UNUSED MONITOR CHANNELS, TIE UNUSED RED MONITOR INPUTS 1,7,8, 9,10,11,12,13,14,15 & 16 TO LOAD SWITCH AC+ PER THE CABINET MANUFACTURER'S INSTRUCTIONS.
3. PROGRAM CONTROLLER TO START UP IN PHASES 2 AND 6 GREEN.
4. ENABLE SIMULTANEOUS GAP-OUT FEATURE, ON CONTROLLER UNIT, FOR ALL PHASES.
5. THE CABINET AND CONTROLLER ARE PART OF THE GASTONIA CITY SIGNAL SYSTEM.

EQUIPMENT INFORMATION

CONTROLLER.....CONTRACTOR SUPPLIED 2070L
CABINET .....CONTRACTOR SUPPLIED 332
SOFTWARE .....ECONOLITE OASIS
CABINET MOUNT.....BASE
OUTPUT FILE POSITIONS...12
LOAD SWITCHES USED.....S2,S3,S4,S5,S6
PHASES USED.....2,3,4,5,6
OVERLAPS.....NONE

FIELD CONNECTION HOOK-UP CHART

LOAD SWITCH NO.	S1	S2	S2P	S3		S4			S4P	S5	S6	S6P	S7	S8	S8P
PHASE	1	2	2 PED	3		4			4 PED	5	6	6 PED	7	8	8 PED
SIGNAL HEAD NO.	NU	21,22	NU	31	32	41	42,43	63	NU	21,43	61 62,63	NU	NU	NU	NU
GREEN		130		118	118	103	103				136				
YELLOW		129		117	117	102	102				135				
RED		128		116	116	101	101			*	134				
RED ARROW															
YELLOW ARROW								102		132					
GREEN ARROW				118		103		103		133					

NU = NOT USED

* DENOTES INSTALL LOAD RESISTOR. SEE LOAD RESISTOR INSTALLATION DETAIL THIS PAGE.

BACK-UP PROTECTION PROGRAMMING DETAIL

(program controller as shown below)

1. FROM MAIN MENU PRESS '2' (PHASE CONTROL), THEN '1' (PHASE CONTROL FUNCTIONS). SCROLL TO THE BOTTOM OF THE MENU AND ENABLE DYNAMIC/BACKUP CONTROL FUNCTION 1.
2. FROM PHASE CONTROL FUNCTIONS MENU PRESS '2' (DYNAMIC/BACKUP CONTROL FUNCTIONS).

```
DYNAMIC/BACKUP CONTROL FUNCTION #01
            OVERLAPS:¦ABCDEFGHIJKLMNOP
IF OVERLAPS ARE ACTIVE ¦
OR        PHASES:¦123456789101112131415 16
IF PHASES ARE ON¦     X
OMIT PHASES     ¦    X
CALL PHASES     ¦   X
```

BACKUP PROTECTION PROGRAMMING COMPLETE

INPUT FILE POSITION LAYOUT

(front view)

		1	2	3	4	5	6	7	8	9	10	11	12	13	14
FILE "I"	U	SLOT	Ø2 2A,2B	SLOT	SLOT	Ø3 3A	Ø4 4A	SLOT	SLOT	SLOT	SLOT	SLOT	SLOT	SLOT	FS DC ISOLATOR
	L	EMPTY	Ø2 2C,2D	EMPTY	EMPTY	NOT USED	Ø4 4B	EMPTY	EMPTY	EMPTY	EMPTY	EMPTY	EMPTY	EMPTY	ST DC ISOLATOR
FILE "J"	U	Ø5 5B	Ø5 5A	Ø6 6A,6B	SLOT	SLOT	SLOT	SLOT	SLOT	SLOT	SLOT	SLOT	SLOT	SLOT	SLOT
	L	NOT USED	Ø2 5A	Ø6 6C,6D	EMPTY	EMPTY	EMPTY	EMPTY	EMPTY	EMPTY	EMPTY	EMPTY	EMPTY	EMPTY	EMPTY

EX.: 1A, 2A, ETC. = LOOP NO.'S

FS = FLASH SENSE
ST = STOP TIME

INPUT FILE CONNECTION & PROGRAMMING CHART

LOOP NO.	LOOP TERMINAL	INPUT FILE POS.	PIN NO.	INPUT ASSIGNMENT NO.	DETECTOR NO.	NEMA PHASE	CALL	EXTEND	FULL TIME DELAY	STRETCH TIME	DELAY TIME
2A,2B	TB2-5,6	I2U	39	1	2	2	Y	Y		1.8	
2C,2D	TB2-7,8	I2L	43	5	12	2	Y	Y			
3A	TB4-5,6	I5U	58	20	3	3	Y	Y			10
4A	TB4-9,10	I6U	41	3	4	4	Y	Y			3
4B	TB4-11,12	I6L	45	7	14	4	Y	Y			3
5B	TB3-1,2	J1U	55	17	5	5	Y	Y			15
5A[1]	TB3-5,6	J2U	40	2	6	5	Y	Y			15
	TB3-7,8	J2L	44	6	16	2	Y	Y			
6A,6B	TB3-9,10	J3U	64	26	36	6	Y	Y		1.8	
6C,6D	TB3-11,12	J3L	77	39	46	6	Y	Y			

[1] ADD JUMPERS FROM TB3-5 TO TB3-7, AND FROM TB3-6 TO TB3-8.

INPUT FILE POSITION LEGEND: J2L
FILE J
SLOT 2
LOWER

LOAD RESISTOR INSTALLATION DETAIL

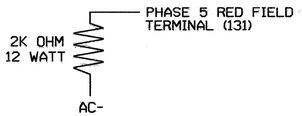

NOTE: THE PURPOSE OF THIS RESISTOR IS TO LOAD THE CHANNEL RED MONITOR INPUT IN ORDER FOR THE SIGNAL SEQUENCE MONITOR TO USE THE FULL SIGNAL SEQUENCE MONITORING CAPABILITY ON CHANNELS THAT DO NOT USE THE RED DISPLAY IN THE FIELD.

THIS ELECTRICAL DETAIL IS FOR
THE SIGNAL DESIGN: 12-0234
DESIGNED: 10/30/03
SEALED: 08/09/04
REVISED:

SIGNAL UPGRADE - FINAL DESIGN

ELECTRICAL AND PROGRAMMING DETAILS FOR:

Prepared in the Offices of:
Traffic Engineering and Safety Systems Branch
Traffic Engineering Division
Signal Management Section
122 N. McDowell St., Raleigh, NC 27603

NC 274 (BESSEMER CITY ROAD)
AT
SR 1351 (ISLEY DRIVE)

DIVISION 12 GASTON COUNTY GASTONIA

PLAN DATE: JULY 2004 REVIEWED BY: T. Joyce
PREPARED BY: WILLIAM HAIRSTON REVIEWED BY:

REVISIONS	INIT.	DATE

SEAL
NORTH CAROLINA PROFESSIONAL SEAL 022013 ENGINEER GEORGE C. BROWN
SIGNATURE DATE
SIG. INVENTORY NO. 12-0234

10-AUG-2004 15:28
S:\Traffic\Mgmt\Joyce\U2408\12023A_2004xxxxa.dgn
$$$$USER

METRIC	PROJECT REFERENCE NO.	SHEET NO.
	U-2408	SIG. 18

PHASING DIAGRAM

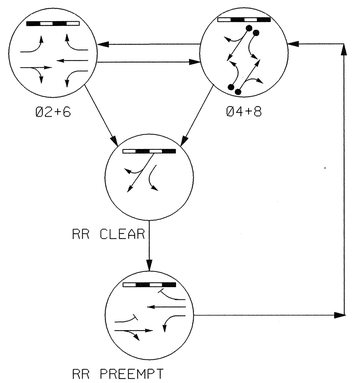

TABLE OF OPERATION

SIGNAL FACE	PHASE Ø2+6	PHASE Ø4+8	RR CLEAR	RR PREEMPT	FLASH
21,22	G	R	R	G	Y
41	R	G	G ←	R	R
42	R	G	G	R	R
61,62	G	R	R	G	Y
81,82	R	G	R	R	R
SIGN Ⓐ	OFF	OFF	ON	ON	*
SIGN Ⓑ	OFF	OFF	ON	ON	*

* SEE NOTE 3

SIGNAL FACE I.D.

Denotes L.E.D.

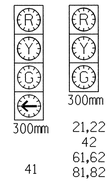

PLAN QUANTITIES

Pay Item	Meters
Signal Cable	425
Messenger Cable	175
Loop Lead-in Cable	345

2 PHASE SEMI ACTUATED RAILROAD PREEMPTION ISOLATED

NOTES

1. Refer to "Roadway Standard Drawings NCDOT" dated January 2002 and "Standard Specifications for Roads and Structures" dated January 2002.
2. Set all detector units to presence mode.
3. Ensure flashing operation does not alter operation of blankout signs.
4. This location contains railroad preemption phasing. Do not program signal for late night flashing operation.

PHASING DIAGRAM DETECTION LEGEND

- DETECTED MOVEMENT
- UNDETECTED MOVEMENT (OVERLAP)
- UNSIGNALIZED MOVEMENT
- PEDESTRIAN MOVEMENT

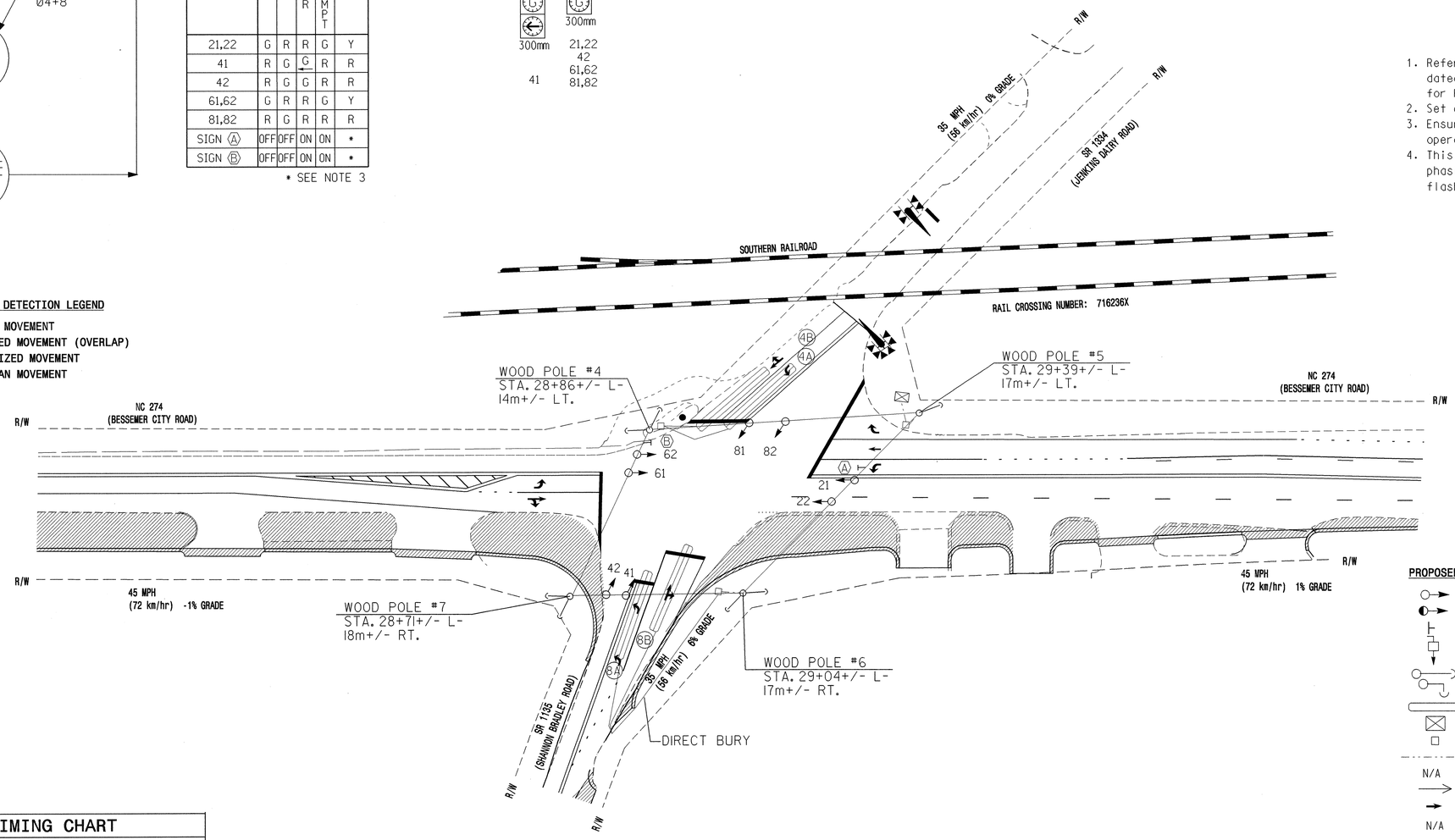

LEGEND

PROPOSED		EXISTING
	Traffic Signal Head	
	Modified Signal Head	N/A
	Sign	
	Pedestrian Signal Head With Push Button & Sign	
	Signal Pole with Guy	
	Signal Pole with Sidewalk Guy	
	Inductive Loop Detector	
	Controller & Cabinet	
	Junction Box	
	50mm Underground Conduit	
N/A	Right of Way with Marker	
	Directional Arrow	
	Pavement Marking Arrow	
N/A	Railroad Gate and Flasher	
N/A	Railroad Tracks	
Ⓐ	"NO LEFT TURN - TRAIN" LED Blankout Sign	Ⓐ
Ⓑ	"NO RIGHT TURN - TRAIN" LED Blankout Sign	Ⓑ
	Construction Zone	

2070L TIMING CHART

FEATURE	PHASE 2	PHASE 4	PHASE 6	PHASE 8
Min Green 1 *	12	7	12	7
Extension 1 *	0.0	1.0	0.0	1.0
Max Green 1 *	45	20	45	20
Yellow Clearance	4.7	4.0	4.7	4.0
Red Clearance	2.5	1.5	2.5	1.5
Walk 1 *	-	-	-	-
Don't Walk 1	-	-	-	-
Seconds Per Actuation *	-	-	-	-
Max Variable Initial *	-	-	-	-
Time Before Reduction *	-	-	-	-
Time To Reduce *	-	-	-	-
Minimum Gap	-	-	-	-
Recall Mode	MAX RECALL	-	MAX RECALL	-
Vehicle Call Memory	YELLOW	-	YELLOW	-
Dual Entry	-	ON	-	ON
Simultaneous Gap	ON	ON	ON	ON

* These values may be field adjusted. Do not adjust Min Green and Extension times for phases 2 and 6 lower than what is shown. Min Green for all other phases should not be lower than 4 seconds.

2070 RAIL PREEMPTION

Interval 1 – Track Clearance Green	24
Interval 1 – Track Clearance Yellow	4.0
Interval 1 – Track Clearance Red	1.5
Interval 2 – Dwell Green	255
Interval 2 – Dwell Yellow	0.0*
Interval 2 – Dwell Red	0.0*
Interval 5 – Exit Green	1
Interval 5 – Exit Yellow	0.0*
Interval 5 – Exit Red	0.0*
Delay Time	0
Min Green Before Pre	1
Ped Clear Before Pre	0
Yellow Clear Before Pre	4.7
Red Clear Before Pre	2.5
Dwell Min Time	10
Ped Clear Through Yellow	N

* Clearance time defaults to time used for phase during normal operation.

2070L LOOP & DETECTOR INSTALLATION

INDUCTIVE LOOPS					DETECTOR PROGRAMMING							
LOOP	SIZE (m)	TURNS	DISTANCE FROM STOPBAR (m)	NEW LOOP	PHASE	CALLING	EXTENSION	FULL TIME DELAY	SYSTEM LOOP	STRETCH TIME	DELAY TIME	NEW CARD
4A	1.8 X 18	2-4-2	+2	Y	4	Y	Y	-	-	-	3	Y
4B	1.8 X 18	2-4-2	+2	Y	4	Y	Y	-	-	-	10	Y
8A	1.8 X 18	2-4-2	+2	Y	8	Y	Y	-	-	-	3	Y
8B	1.8 X 18	2-4-2	+2	Y	8	Y	Y	-	-	-	10	Y

Prepared in the Office of:

THE LPA GROUP TRANSPORTATION CONSULTANTS

THE LPA GROUP of North Carolina, p.a.
4904 PROFESSIONAL COURT, SUITE 201
Raleigh, North Carolina 27609

SIGNAL UPGRADE - TEMPORARY DESIGN 1

Traffic Engineering and Safety Systems Branch
STATE OF NORTH CAROLINA DEPARTMENT OF TRANSPORTATION
Signals and Geometrics Section

N.C. 274 (BESSEMER CITY ROAD)
AT
SR 1334 (JENKINS DAIRY ROAD) &
SR 1135 (SHANNON BRADLEY ROAD)

DIVISION 12 GASTON COUNTY GASTONIA

PLAN DATE:	OCT. 30, 2003	REVIEWED BY:	R.DUBNICKA,P.E.
PREPARED BY:	RGL	REVIEWED BY:	

SCALE 5 0 10 1:500

REVISIONS	INIT.	DATE

SEAL

NORTH CAROLINA PROFESSIONAL SEAL 027742 ENGINEER ROBERT J. DUBNICKA

Robert J. Dubnicka 8-9-04
SIGNATURE DATE

SIG. INVENTORY NO. 12-0335T1

09-AUG-2004 12:28
T:\Traffic\MU2408\Signal Plans\SIG-3.dgn
cbd01bkd

PROJECT REFERENCE NO.	SHEET NO.
U-2408	SIG. 19

EDI MODEL 2010ECL CONFLICT MONITOR PROGRAMMING DETAIL

(remove jumpers and set switches as shown)

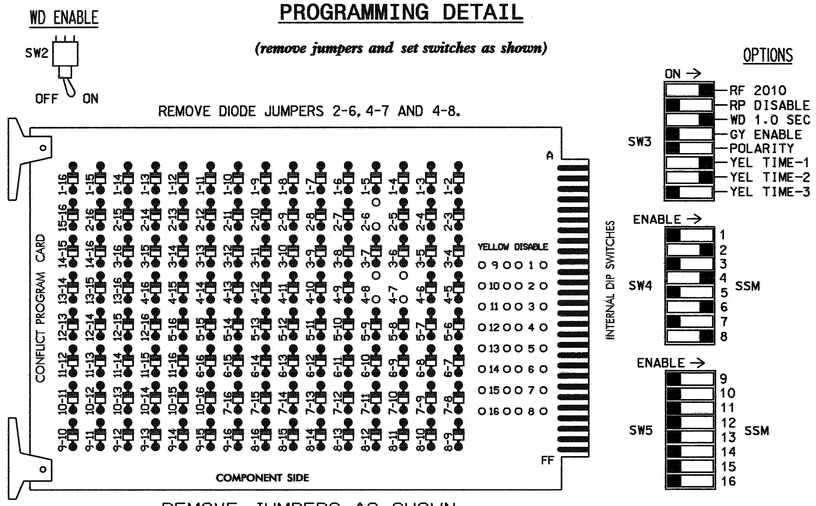

REMOVE JUMPERS AS SHOWN

■ = DENOTES POSITION OF SWITCH

NOTES:

1. CARD IS PROVIDED WITH ALL DIODE JUMPERS IN PLACE. REMOVAL OF ANY JUMPER ALLOWS ITS CHANNELS TO RUN CONCURRENTLY.
2. MAKE SURE JUMPERS SEL1-SEL5 ARE PRESENT ON THE MONITOR BOARD.

NOTES

1. TO PREVENT "FLASH-CONFLICT" PROBLEMS, INSERT RED FLASH PROGRAM BLOCKS FOR ALL UNUSED VEHICLE LOAD SWITCHES IN THE OUTPUT FILE. THE INSTALLER SHALL VERIFY THAT SIGNAL HEADS FLASH IN ACCORDANCE WITH THE SIGNAL PLANS.
2. ENSURE THAT RED ENABLE IS ACTIVE AT ALL TIMES DURING NORMAL OPERATION. TO PREVENT RED FAILURES ON UNUSED MONITOR CHANNELS, TIE UNUSED RED MONITOR INPUTS 1,3,5, 7,9,10,11,12,13,14,15 & 16 TO LOAD SWITCH AC+ PER THE CABINET MANUFACTURER'S INSTRUCTIONS.
3. PROGRAM CONTROLLER TO START UP IN PHASES 2 AND 6 GREEN.
4. ENABLE SIMULTANEOUS GAP-OUT FEATURE, ON CONTROLLER UNIT, FOR ALL PHASES.
5. PROGRAM PHASES 4 AND 8, ON CONTROLLER UNIT, FOR DUAL ENTRY.

EQUIPMENT INFORMATION

CONTROLLER.....CONTRACTOR SUPPLIED 2070L
CABINET .....CONTRACTOR SUPPLIED 332
SOFTWARE .....ECONOLITE OASIS 3.00.81
CABINET MOUNT.....BASE
OUTPUT FILE POSITIONS...12
LOAD SWITCHES USED.....S2,S4,S6,S7,S8
PHASES USED.....2,4,6,7*8
OVERLAPS.....NONE

* USED DURING PREEMPT ONLY

FIELD CONNECTION HOOK-UP CHART

LOAD SWITCH NO.	S1	S2	S2P	S3	S4	S4P	S5	S6	S6P	S7	S8	S8P
PHASE	1	2	2 PED	3	4	4 PED	5	6	6 PED	7	8	8 PED
SIGNAL HEAD NO.	NU	21,22	NU	NU	41,42	NU	NU	61,62	NU	41	81,82	NU
GREEN		130			103			136			109	
YELLOW		129			102			135		*	108	
RED		128			101			134			107	
RED ARROW												
YELLOW ARROW												
GREEN ARROW										124		

NU = NOT USED

* DENOTES INSTALL LOAD RESISTOR. SEE LOAD RESISTOR INSTALLATION DETAIL THIS PAGE.

INPUT FILE POSITION LAYOUT

(front view)

		1	2	3	4	5	6	7	8	9	10	11	12	13	14
FILE "I"	U	SLOT EMPTY	SLOT EMPTY	SLOT EMPTY	SLOT EMPTY	SLOT EMPTY	SLOT EMPTY	ø4 4A	SLOT EMPTY	SLOT EMPTY	SLOT EMPTY	SLOT EMPTY	SLOT EMPTY	SLOT EMPTY	FS DC ISOLATOR
	L							ø4 4B							ST DC ISOLATOR
FILE "J"	U	SLOT EMPTY	SLOT EMPTY	SLOT EMPTY	SLOT EMPTY	SLOT EMPTY	SLOT EMPTY	ø8 8A	SLOT EMPTY	SLOT EMPTY	SLOT EMPTY	SLOT EMPTY	SLOT EMPTY	SLOT EMPTY	PRE1 AC ISOLATOR
	L							ø8 8B							NOT USED

EX.: 1A, 2A, ETC. = LOOP NO.'S

FS = FLASH SENSE
ST = STOP TIME
PRE = PREEMPT

INPUT FILE CONNECTION & PROGRAMMING CHART

LOOP NO.	LOOP TERMINAL	INPUT FILE POS.	PIN NO.	INPUT ASSIGNMENT NO.	DETECTOR NO.	NEMA PHASE	CALL	EXTEND	FULL TIME DELAY	STRETCH TIME	DELAY TIME
4A	TB6-1,2	I7U	65	27	34	4	Y	Y			3
4B	TB6-3,4	I7L	78	40	44	4	Y	Y			10
8A	TB7-1,2	J7U	66	28	38	8	Y	Y			3
8B	TB7-3,4	J7L	79	41	48	8	Y	Y			10

INPUT FILE POSITION LEGEND: J2L
FILE J
SLOT 2
LOWER

PREEMPT ONLY PHASE OMIT NOTE

(program controller as shown below)

FROM MAIN MENU PRESS '2' (PHASE CONTROL), THEN '1' (PHASE CONTROL FUNCTIONS). PROGRAM PHASE 7 FOR 'OMIT PHASE' AND PHASES 2, 4, 6 AND 8 FOR 'STARTUP CALLS'. THIS IS TO PREVENT PHASE 7 FROM BEING SERVED WHEN NOT IN PREEMPT.

LOAD RESISTOR INSTALLATION DETAIL

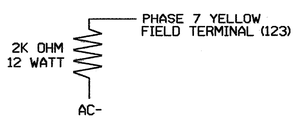

NOTE: THE PURPOSE OF THIS RESISTOR IS TO LOAD THE CHANNEL YELLOW MONITOR INPUT IN ORDER TO PREVENT THE SIGNAL SEQUENCE MONITOR FROM DETECTING ANY POSSIBLE 'PHANTOM' (OR FALSE) CONFLICT, AS THIS CHANNEL HAS NO YELLOW FIELD DISPLAY.

THIS ELECTRICAL DETAIL IS FOR
THE SIGNAL DESIGN: 12-0335T1
DESIGNED: 10/30/03
SEALED: 08/09/04
REVISED:

SIGNAL UPGRADE - TEMPORARY DESIGN 1 - SHEET 1 OF 2

ELECTRICAL AND PROGRAMMING DETAILS FOR:

Prepared in the Offices of:
Traffic Engineering and Safety Systems Branch
STATE OF NORTH CAROLINA DEPARTMENT OF TRANSPORTATION
Signals Management Section
122 N. McDowell St., Raleigh, NC 27603

NC 274 (BESSEMER CITY ROAD)
AT
SR 1334 (JENKINS DAIRY ROAD) &
SR 1135 (SHANNON BRADLEY ROAD)

DIVISION 12 GASTON COUNTY GASTONIA

PLAN DATE: JULY 2004 REVIEWED BY: T Jaya
PREPARED BY: WILLIAM HAIRSTON REVIEWED BY:

REVISIONS	INIT.	DATE

SEAL
NORTH CAROLINA PROFESSIONAL SEAL 022013 ENGINEER GEORGE C. BROWN

George C. Brown 8/12/04
SIGNATURE DATE

SIG. INVENTORY NO. 12-0335T1

10-AUG-2004 15:41
S:\ec1(dgn*)Joyce\U2408*\20335_2004xxxxe.dgn
$$$$USER

PROJECT REFERENCE NO.	SHEET NO.
U-2408	SIG. 2D

RAILROAD PREEMPTION PROGRAMMING DETAIL

(program controller as shown below)

FROM MAIN MENU PRESS 'A' (PREEMPTION), THEN '1' (STANDARD PREEMPTIONS).

```
   PREEMPTION  #1  SETTINGS (NEXT:1-10)
INTERVAL/TIMING  |  CLEAR/DWELL PHASES
  GRN YEL  RED   |123456789101112131415 16
1  24  4.0  1.5  |   X   X
2 255  0.0  0.0  | X   X
3   0  0.0  0.0  |
4   0  0.0  0.0  |
5   1  0.0  0.0  |   X   X
EXIT CALLS       |
            OPTIONS
PRIORITY (Y/N TO SELECT) ............HIGH
DELAY TIMER (0-255 SEC) .............0
MIN GREEN BEFORE PRE (0= DEFAULT)....1
PED CLEAR BEFORE PRE (0= DEFAULT)....0
YELLOW CLEAR BEFORE PRE (0= DEFAULT).4.7
RED CLEAR BEFORE PRE (0= DEFAULT)....2.5
DWELL MIN TIMER (0-255 SEC) .........10
DWELL MAX TIMER (0=OFF,1-255MIN) ....0
DWELL HOLD-OVER TIMER (0-255) .......0
LATCH CALL? .........................N
LINK TO NEXT PREEMPT? ...............N
ENABLE BACKUP PROTECTION? ...........N
HOLD CLEAR 1 PHASES DURING DELAY? ...N
FAST GREEN FLASH DWELL PHASES? ......N
PED CLEARANCE THROUGH YELLOW? .......N
INHIBIT OVERLAP GREEN EXTENSION? ....N
SERVICE DURING SOFTWARE FLASH? ......N
REST IN RED DURING DWELL INTERVAL? ..N
FLASH DWELL INTERVAL? ...............N
ALLOW PEDS IN DWELL INTERVAL? .......N
RE-TIME DWELL INTERVAL? .............N
OVERLAPS:                 | ABCDEFGHIJKLMNOP
DWELL INT FLASH YELLOW    |
OMIT OVERLAPS:            |
```

RAILROAD PREEMPTION WIRING DETAIL

(wire as shown below)

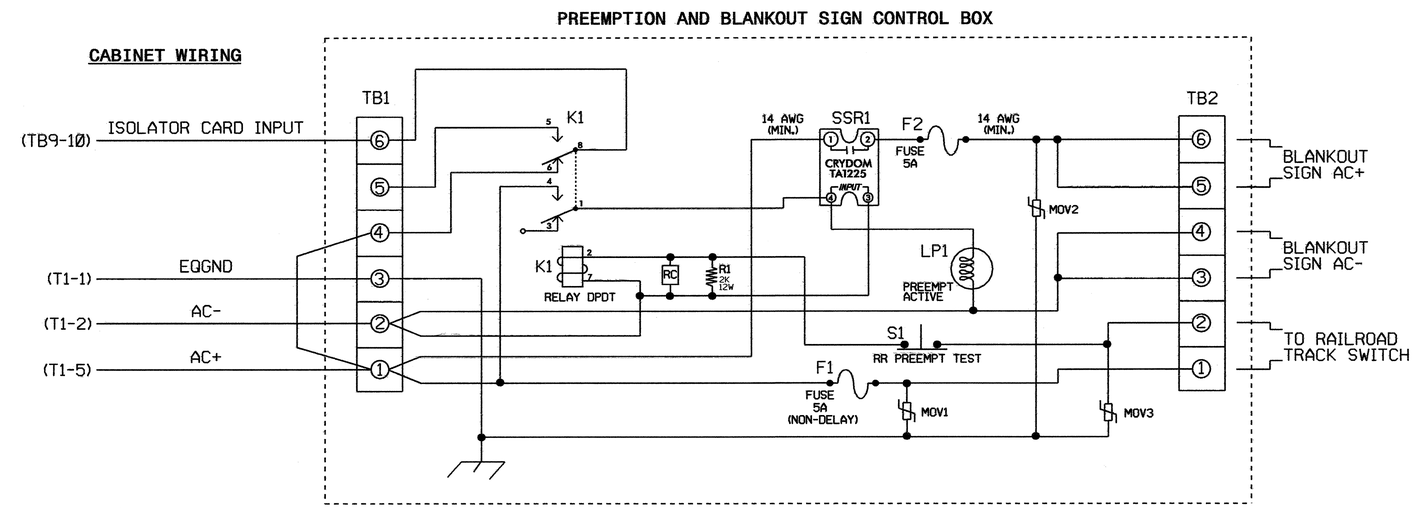

NOTES

1. RELAY K1 IS SHOWN IN THE ENERGIZED (PREEMPT NOT ACTIVE) NORMAL OPERATION STATE.
2. RELAY K1 IS A DPDT WITH 120VAC COIL. POTTER & BRUMFIELD KRP11AG WITH OCTAL BASE OR APPROVED EQUIVALENT.
3. RELAY SSR1 IS A SPST (NORMALLY OPEN) SOLID STATE RELAY WITH AC INPUT AND AC (25 AMP) OUTPUT. CRYDOM TA1225 OR APPROVED EQUIVALENT.
4. AC ISOLATOR CARD SHALL ACTIVATE PREEMPTION UPON REMOVAL OF AC+ FROM THE INPUT (AS SHOWN ABOVE).
5. RESISTOR IS VALUED AT 2K OHM, 12 WATT. CLAROSTAT PART NO. VPR10F-2K OR APPROVED EQUIVALENT.
6. RC NETWORK IS VALUED AT .1 MICROFARAD, 100 OHM.
7. IF REPLACEMENT MOVS ARE NEEDED, GE PART NO. V150LA20A MAY BE USED.
8. PREEMPTION AND BLANKOUT SIGN CONTROL BOX IS A CONTROL TECHNOLOGIES PART NO. 2299-101 OR APPROVED EQUIVALENT.
9. IMPORTANT!! A JUMPER MUST BE ADDED BETWEEN INPUT FILE TERMINALS J14-E AND J14-K IF NOT ALREADY PRESENT. ALSO, TERMINAL TB9-12 (ON INPUT PANEL) SHALL BE CONNECTED TO AC NEUTRAL (JUMPER MAY HAVE TO BE ADDED).

FRONT VIEW

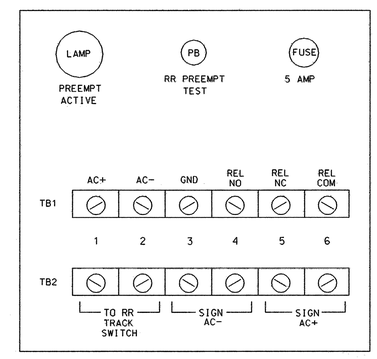

THIS ELECTRICAL DETAIL IS FOR
THE SIGNAL DESIGN: 12-0335T1
DESIGNED: 10/30/03
SEALED: 08/09/04
REVISED:

SIGNAL UPGRADE - TEMPORARY DESIGN 1 - SHEET 2 OF 2

ELECTRICAL AND PROGRAMMING DETAILS FOR:

Prepared in the Offices of:
Traffic Engineering and Safety Systems Branch
STATE OF NORTH CAROLINA DEPARTMENT OF TRANSPORTATION
Signals Management Section
122 N. McDowell St., Raleigh, NC 27603

NC 274 (BESSEMER CITY ROAD)
AT
SR 1334 (JENKINS DAIRY ROAD) &
SR 1135 (SHANNON BRADLEY ROAD)

DIVISION 12 GASTON COUNTY GASTONIA

PLAN DATE: JULY 2004 REVIEWED BY: T Joyce
PREPARED BY: WILLIAM HAIRSTON REVIEWED BY:

REVISIONS	INIT.	DATE

SEAL
NORTH CAROLINA PROFESSIONAL SEAL 022013 ENGINEER GEORGE C. BROWN
George C. Brown 8/12/04
SIGNATURE DATE
SIG. INVENTORY NO. 12-0335T1

10-AUG-2004 15:42
S:\Traffic\Wgmt\Joyce\U2408\12035_2004xxxxa.dgn
$$$$USER

METRIC	PROJECT REFERENCE NO.	SHEET NO.
	U-2408	SIG. 21

2 PHASE SEMI ACTUATED RAILROAD PREEMPTION ISOLATED

PHASING DIAGRAM

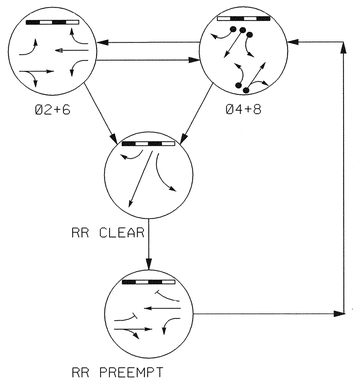

TABLE OF OPERATION

SIGNAL FACE	PHASE Ø2+6	PHASE Ø4+8	RR CLEAR	RR PREEMPT	FLASH
21,22	G	R	R	G	Y
41	R	G	G	R	R
42	R	G	G	R	R
61,62	G	R	R	G	Y
81,82	R	G	R	R	R
SIGN Ⓐ	OFF	OFF	ON	ON	*
SIGN Ⓑ	OFF	OFF	ON	ON	*

* SEE NOTE 3

SIGNAL FACE I.D.

Denotes L.E.D.

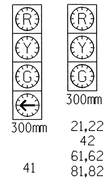

PLAN QUANTITIES

Pay Item	Meters
Signal Cable	0
Messenger Cable	0
Loop Lead-in Cable	495

NOTES

1. Refer to "Roadway Standard Drawings NCDOT" dated January 2002 and "Standard Specifications for Roads and Structures" dated January 2002.
2. Set all detector units to presence mode.
3. Ensure flashing operation does not alter operation of blankout signs.
4. Reposition existing signal heads numbered #21, 22, 41, 42, 61, 62, 81, and 82.
5. This location contains railroad preemption phasing. Do not program signal for late night flashing operation.

PHASING DIAGRAM DETECTION LEGEND

- DETECTED MOVEMENT
- UNDETECTED MOVEMENT (OVERLAP)
- UNSIGNALIZED MOVEMENT
- PEDESTRIAN MOVEMENT

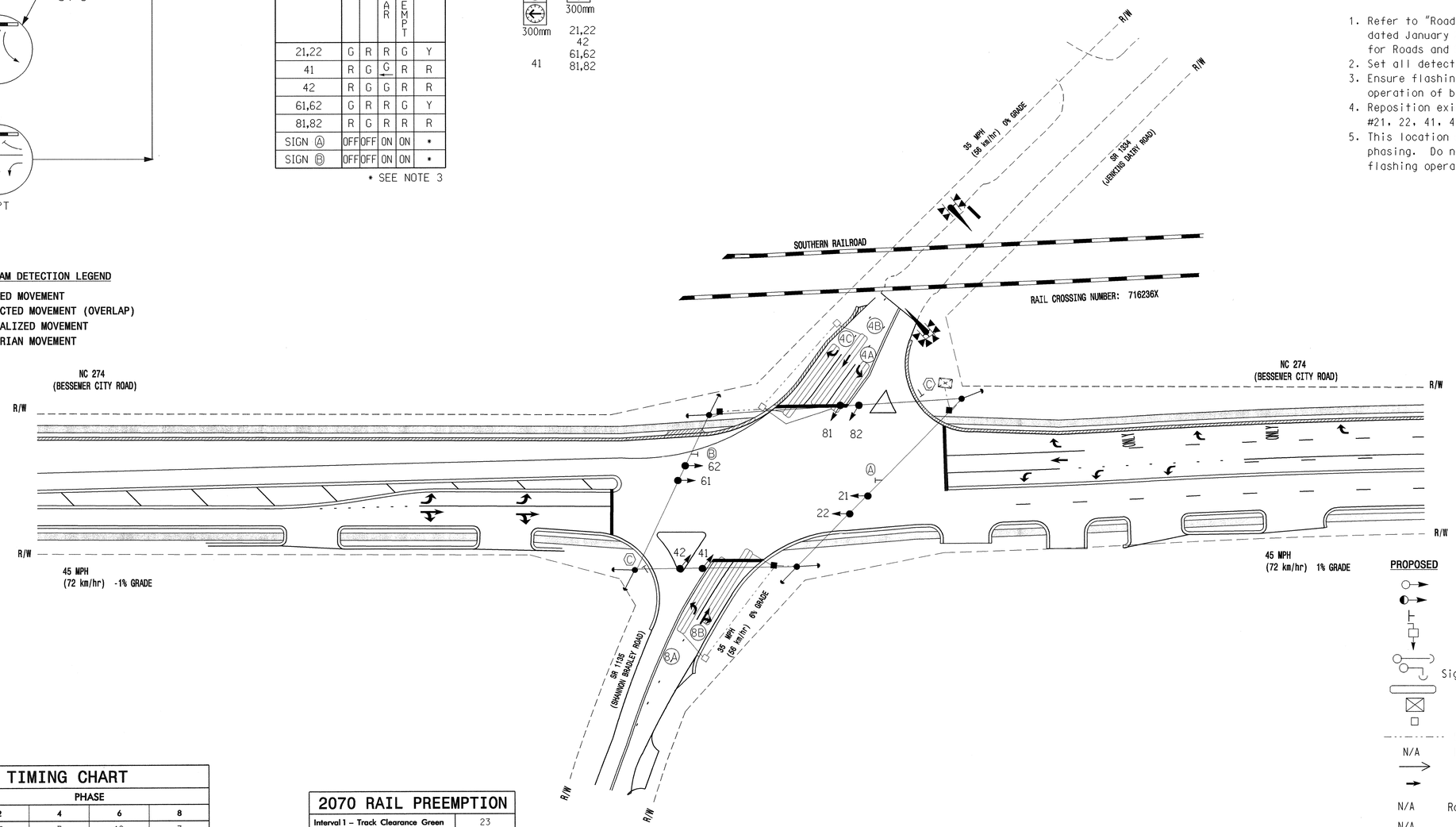

LEGEND

PROPOSED		EXISTING
	Traffic Signal Head	
	Modified Signal Head	N/A
	Sign	
	Pedestrian Signal Head With Push Button & Sign	
	Signal Pole with Guy	
	Signal Pole with Sidewalk Guy	
	Inductive Loop Detector	
	Controller & Cabinet	
	Junction Box	
	50mm Underground Conduit	
N/A	Right of Way with Marker	
	Directional Arrow	
	Pavement Marking Arrow	
N/A	Railroad Gate and Flasher	
N/A	Railroad Tracks	
Ⓐ	"NO LEFT TURN - TRAIN" LED Blankout Sign	Ⓐ
Ⓑ	"NO RIGHT TURN - TRAIN" LED Blankout Sign	Ⓑ
Ⓒ	"YIELD" Sign (R1-2)	Ⓒ

2070L TIMING CHART

FEATURE	PHASE 2	PHASE 4	PHASE 6	PHASE 8
Min Green 1 *	12	7	12	7
Extension 1 *	0.0	1.0	0.0	1.0
Max Green 1 *	45	20	45	20
Yellow Clearance	5.0	4.0	5.0	4.0
Red Clearance	3.0	2.5	3.0	2.5
Walk 1 *	-	-	-	-
Don't Walk 1	-	-	-	-
Seconds Per Actuation *	-	-	-	-
Max Variable Initial *	-	-	-	-
Time Before Reduction *	-	-	-	-
Time To Reduce *	-	-	-	-
Minimum Gap	-	-	-	-
Recall Mode	MAX RECALL	-	MAX RECALL	-
Vehicle Call Memory	YELLOW	-	YELLOW	-
Dual Entry	-	ON	-	ON
Simultaneous Gap	ON	ON	ON	ON

* These values may be field adjusted. Do not adjust Min Green and Extension times for phases 2 and 6 lower than what is shown. Min Green for all other phases should not be lower than 4 seconds.

2070 RAIL PREEMPTION

Interval 1 – Track Clearance Green	23
Interval 1 – Track Clearance Yellow	4.0
Interval 1 – Track Clearance Red	2.5
Interval 2 – Dwell Green	255
Interval 2 – Dwell Yellow	0.0*
Interval 2 – Dwell Red	0.0*
Interval 5 – Exit Green	1
Interval 5 – Exit Yellow	0.0*
Interval 5 – Exit Red	0.0*
Delay Time	0
Min Green Before Pre	1
Ped Clear Before Pre	0
Yellow Clear Before Pre	5.0
Red Clear Before Pre	3.0
Dwell Min Time	10
Ped Clear Through Yellow	N

* Clearance time defaults to time used for phase during normal operation.

2070L LOOP & DETECTOR INSTALLATION

INDUCTIVE LOOPS					DETECTOR PROGRAMMING							
LOOP	SIZE (m)	TURNS	DISTANCE FROM STOPBAR (m)	NEW LOOP	PHASE	CALLING	EXTENSION	FULL TIME DELAY	SYSTEM LOOP	STRETCH TIME	DELAY TIME	NEW CARD
4A	1.8 X 12	2-4-2	+1	Y	4	Y	Y	-	-	-	3	-
4B	1.8 X 18	2-4-2	0	Y	4	Y	Y	-	-	-	-	-
4C	1.8 X 18	2-4-2	+2	Y	4	Y	Y	-	-	-	15	Y
8A	1.8 X 18	2-4-2	+0	Y	8	Y	Y	-	-	-	3	-
8B	1.8 X 18	4	+2	Y	8	Y	Y	-	-	-	10	-

Prepared in the Office of:

THE LPA GROUP TRANSPORTATION CONSULTANTS

THE LPA GROUP of North Carolina, p.a.
4904 PROFESSIONAL COURT, SUITE 201
Raleigh, North Carolina 27609

SIGNAL UPGRADE - TEMPORARY DESIGN 2

Traffic Engineering and Safety Systems Branch
STATE OF NORTH CAROLINA DEPARTMENT OF TRANSPORTATION
Signals and Geometrics Section

N.C. 274 (BESSEMER CITY ROAD)
AT
SR 1334 (JENKINS DAIRY ROAD) &
SR 1135 (SHANNON BRADLEY ROAD)

DIVISION 12 GASTON COUNTY GASTONIA

PLAN DATE:	OCT. 30,2003	REVIEWED BY:	R.DUBNICKA,P.E.
PREPARED BY:	RGL	REVIEWED BY:	

SCALE 5 0 10 1:500

REVISIONS	INIT.	DATE

SEAL

NORTH CAROLINA PROFESSIONAL SEAL 027742 ENGINEER ROBERT J. DUBNICKA

SIGNATURE Robert J. Dubnicka DATE 8-9-04

SIG. INVENTORY NO. 12-0335T2

09-AUG-2004 12:28
Y:\Traffic\U2408\Signal Plans\SIG-3A.dgn
rdubnicka

PROJECT REFERENCE NO.	SHEET NO.
U-2408	SIG. 22

EDI MODEL 2010ECL CONFLICT MONITOR PROGRAMMING DETAIL

(remove jumpers and set switches as shown)

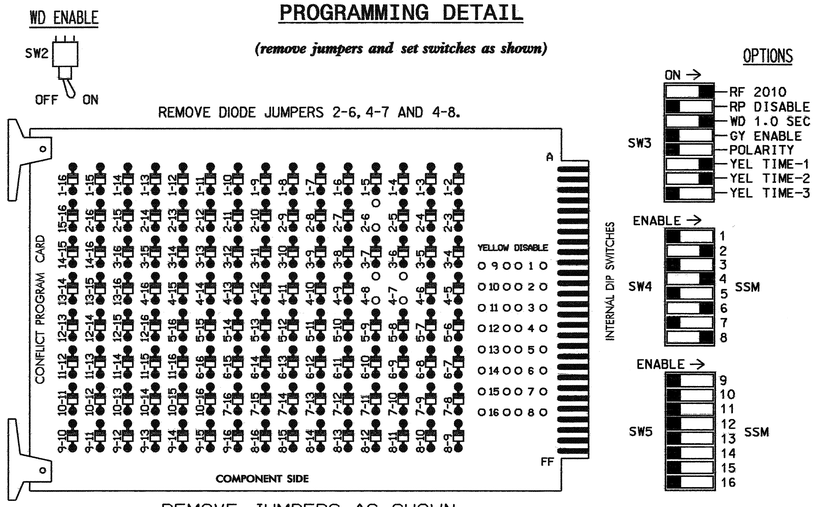

REMOVE JUMPERS AS SHOWN

■ = DENOTES POSITION OF SWITCH

NOTES:

1. CARD IS PROVIDED WITH ALL DIODE JUMPERS IN PLACE. REMOVAL OF ANY JUMPER ALLOWS ITS CHANNELS TO RUN CONCURRENTLY.
2. MAKE SURE JUMPERS SEL1-SEL5 ARE PRESENT ON THE MONITOR BOARD.

NOTES

1. TO PREVENT "FLASH-CONFLICT" PROBLEMS, INSERT RED FLASH PROGRAM BLOCKS FOR ALL UNUSED VEHICLE LOAD SWITCHES IN THE OUTPUT FILE. THE INSTALLER SHALL VERIFY THAT SIGNAL HEADS FLASH IN ACCORDANCE WITH THE SIGNAL PLANS.
2. ENSURE THAT RED ENABLE IS ACTIVE AT ALL TIMES DURING NORMAL OPERATION. TO PREVENT RED FAILURES ON UNUSED MONITOR CHANNELS, TIE UNUSED RED MONITOR INPUTS 1,3,5, 7,9,10,11,12,13,14,15 & 16 TO LOAD SWITCH AC+ PER THE CABINET MANUFACTURER'S INSTRUCTIONS.
3. PROGRAM CONTROLLER TO START UP IN PHASES 2 AND 6 GREEN.
4. ENABLE SIMULTANEOUS GAP-OUT FEATURE, ON CONTROLLER UNIT, FOR ALL PHASES.
5. PROGRAM PHASES 4 AND 8, ON CONTROLLER UNIT, FOR DUAL ENTRY.

EQUIPMENT INFORMATION

CONTROLLER.....CONTRACTOR SUPPLIED 2070L
CABINET .....CONTRACTOR SUPPLIED 332
SOFTWARE .....ECONOLITE OASIS 3.00.81
CABINET MOUNT.....BASE
OUTPUT FILE POSITIONS...12
LOAD SWITCHES USED.....S2,S4,S6,S7,S8
PHASES USED.....2,4,6,7*8
OVERLAPS.....NONE

* USED DURING PREEMPT ONLY

FIELD CONNECTION HOOK-UP CHART

LOAD SWITCH NO.	S1	S2	S2P	S3	S4	S4P	S5	S6	S6P	S7	S8	S8P
PHASE	1	2	2 PED	3	4	4 PED	5	6	6 PED	7	8	8 PED
SIGNAL HEAD NO.	NU	21,22	NU	NU	41,42	NU	NU	61,62	NU	41	81,82	NU
GREEN		130			103			136			109	
YELLOW		129			102			135		*	108	
RED		128			101			134			107	
RED ARROW												
YELLOW ARROW												
GREEN ARROW										124		

NU = NOT USED

* DENOTES INSTALL LOAD RESISTOR. SEE LOAD RESISTOR INSTALLATION DETAIL THIS PAGE.

INPUT FILE POSITION LAYOUT

(front view)

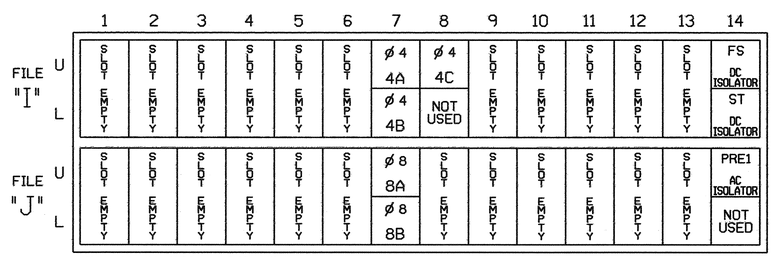

EX.: 1A, 2A, ETC. = LOOP NO.'S

FS = FLASH SENSE
ST = STOP TIME
PRE = PREEMPT

INPUT FILE CONNECTION & PROGRAMMING CHART

LOOP NO.	LOOP TERMINAL	INPUT FILE POS.	PIN NO.	INPUT ASSIGNMENT NO.	DETECTOR NO.	NEMA PHASE	CALL	EXTEND	FULL TIME DELAY	STRETCH TIME	DELAY TIME
4A	TB6-1,2	I7U	65	27	34	4	Y	Y			3
4B	TB6-3,4	I7L	78	40	44	4	Y	Y			
4C	TB6-5,6	I8U	49	11	24	4	Y	Y			15
8A	TB7-1,2	J7U	66	28	38	8	Y	Y			3
8B	TB7-3,4	J7L	79	41	48	8	Y	Y			10

INPUT FILE POSITION LEGEND: J2L
FILE J
SLOT 2
LOWER

PREEMPT ONLY PHASE OMIT NOTE

(program controller as shown below)

FROM MAIN MENU PRESS '2' (PHASE CONTROL), THEN '1' (PHASE CONTROL FUNCTIONS). PROGRAM PHASE 7 FOR 'OMIT PHASE' AND PHASES 2, 4, 6 AND 8 FOR 'STARTUP CALLS'. THIS IS TO PREVENT PHASE 7 FROM BEING SERVED WHEN NOT IN PREEMPT.

LOAD RESISTOR INSTALLATION DETAIL

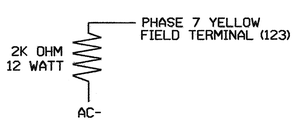

NOTE: THE PURPOSE OF THIS RESISTOR IS TO LOAD THE CHANNEL YELLOW MONITOR INPUT IN ORDER TO PREVENT THE SIGNAL SEQUENCE MONITOR FROM DETECTING ANY POSSIBLE 'PHANTOM' (OR FALSE) CONFLICT, AS THIS CHANNEL HAS NO YELLOW FIELD DISPLAY.

THIS ELECTRICAL DETAIL IS FOR
THE SIGNAL DESIGN: 12-0335T2
DESIGNED: 10/30/03
SEALED: 08/09/04
REVISED:

SIGNAL UPGRADE - TEMPORARY DESIGN 2 - SHEET 1 OF 2

ELECTRICAL AND PROGRAMMING DETAILS FOR:

Prepared in the Offices of:
Traffic Engineering and Safety Systems Branch
STATE OF NORTH CAROLINA DEPT. OF TRANSPORTATION
Signal Management Section
122 N. McDowell St., Raleigh, NC 27603

NC 274 (BESSEMER CITY ROAD)
AT
SR 1334 (JENKINS DAIRY ROAD) &
SR 1135 (SHANNON BRADLEY ROAD)

DIVISION 12 GASTON COUNTY GASTONIA

PLAN DATE: JULY 2004 REVIEWED BY: T Jys
PREPARED BY: WILLIAM HAIRSTON REVIEWED BY:

REVISIONS	INIT.	DATE

SEAL
NORTH CAROLINA PROFESSIONAL SEAL 022013 ENGINEER GEORGE C. BROWN
George C. Brown 8/12/04
SIGNATURE DATE
SIG. INVENTORY NO. 12-0335T2

10-AUG-2004 15:47
S:\ES\dgn\ms\0jcs\U2408\12033S_2004xxxxb.dgn
s_jcpeo

PROJECT REFERENCE NO.	SHEET NO.
U-2408	SIG. 23

RAILROAD PREEMPTION PROGRAMMING DETAIL

(program controller as shown below)

FROM MAIN MENU PRESS 'A' (PREEMPTION), THEN '1' (STANDARD PREEMPTIONS).

```
   PREEMPTION  #1  SETTINGS (NEXT:1-10)
INTERVAL/TIMING  |  CLEAR/DWELL PHASES
  GRN YEL  RED   |123456789101112131415 16
1  23  4.0  2.5  |   X  X
2 255  0.0  0.0  | X   X
3   0  0.0  0.0  |
4   0  0.0  0.0  |
5   1  0.0  0.0  |    X   X
EXIT CALLS       |
            OPTIONS
PRIORITY (Y/N TO SELECT) ............HIGH
DELAY TIMER (0-255 SEC) .............0
MIN GREEN BEFORE PRE (0= DEFAULT)....1
PED CLEAR BEFORE PRE (0= DEFAULT)....0
YELLOW CLEAR BEFORE PRE (0= DEFAULT).5.0
RED CLEAR BEFORE PRE (0= DEFAULT)....3.0
DWELL MIN TIMER (0-255 SEC) .........10
DWELL MAX TIMER (0=OFF,1-255MIN) ....0
DWELL HOLD-OVER TIMER (0-255) .......0
LATCH CALL? .........................N
LINK TO NEXT PREEMPT? ...............N
ENABLE BACKUP PROTECTION? ...........N
HOLD CLEAR 1 PHASES DURING DELAY? ...N
FAST GREEN FLASH DWELL PHASES? ......N
PED CLEARANCE THROUGH YELLOW? .......N
INHIBIT OVERLAP GREEN EXTENSION? ....N
SERVICE DURING SOFTWARE FLASH? ......N
REST IN RED DURING DWELL INTERVAL? ..N
FLASH DWELL INTERVAL? ...............N
ALLOW PEDS IN DWELL INTERVAL? .......N
RE-TIME DWELL INTERVAL? .............N
OVERLAPS:                 | ABCDEFGHIJKLMNOP
DWELL INT FLASH YELLOW    |
OMIT OVERLAPS:            |
```

RAILROAD PREEMPTION WIRING DETAIL

(wire as shown below)

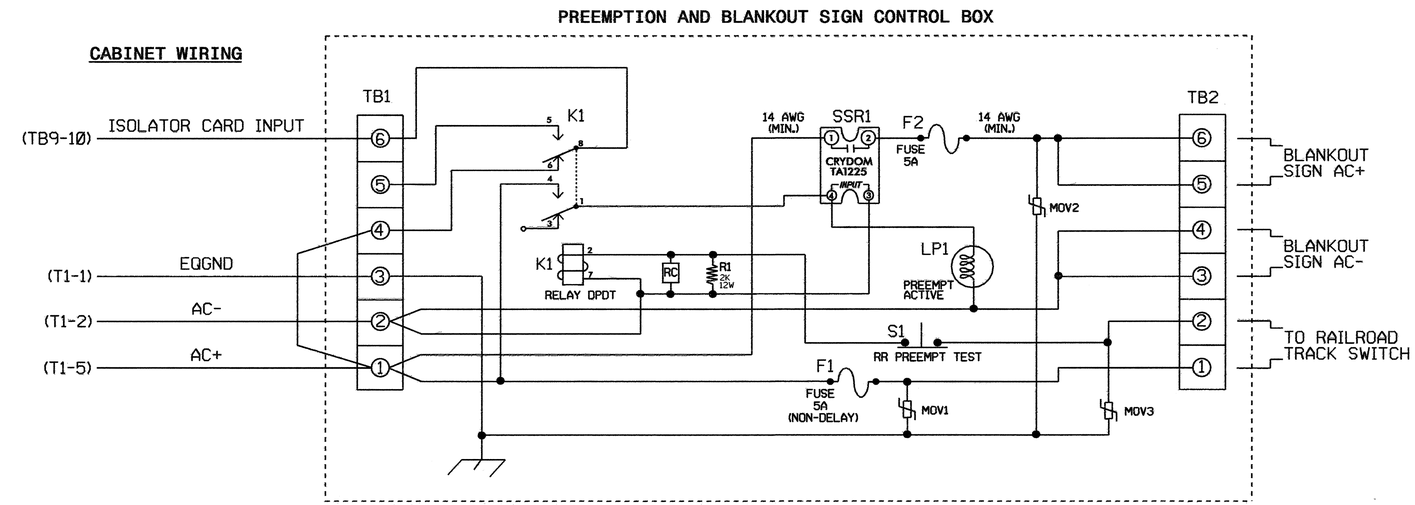

NOTES

1. RELAY K1 IS SHOWN IN THE ENERGIZED (PREEMPT NOT ACTIVE) NORMAL OPERATION STATE.
2. RELAY K1 IS A DPDT WITH 120VAC COIL. POTTER & BRUMFIELD KRP11AG WITH OCTAL BASE OR APPROVED EQUIVALENT.
3. RELAY SSR1 IS A SPST (NORMALLY OPEN) SOLID STATE RELAY WITH AC INPUT AND AC (25 AMP) OUTPUT. CRYDOM TA1225 OR APPROVED EQUIVALENT.
4. AC ISOLATOR CARD SHALL ACTIVATE PREEMPTION UPON REMOVAL OF AC+ FROM THE INPUT (AS SHOWN ABOVE).
5. RESISTOR IS VALUED AT 2K OHM, 12 WATT. CLAROSTAT PART NO. VPR10F-2K OR APPROVED EQUIVALENT.
6. RC NETWORK IS VALUED AT .1 MICROFARAD, 100 OHM.
7. IF REPLACEMENT MOVS ARE NEEDED, GE PART NO. V150LA20A MAY BE USED.
8. PREEMPTION AND BLANKOUT SIGN CONTROL BOX IS A CONTROL TECHNOLOGIES PART NO. 2299-101 OR APPROVED EQUIVALENT.
9. IMPORTANT!! A JUMPER MUST BE ADDED BETWEEN INPUT FILE TERMINALS J14-E AND J14-K IF NOT ALREADY PRESENT. ALSO, TERMINAL TB9-12 (ON INPUT PANEL) SHALL BE CONNECTED TO AC NEUTRAL (JUMPER MAY HAVE TO BE ADDED).

FRONT VIEW

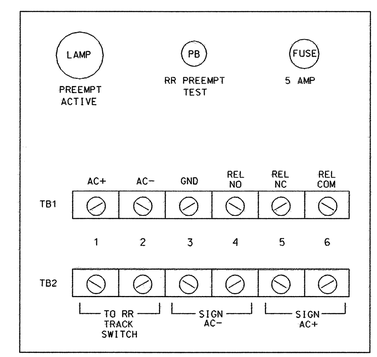

THIS ELECTRICAL DETAIL IS FOR
THE SIGNAL DESIGN: 12-0335T2
DESIGNED: 10/30/03
SEALED: 08/09/04
REVISED:

SIGNAL UPGRADE - TEMPORARY DESIGN 2 - SHEET 2 OF 2

ELECTRICAL AND PROGRAMMING DETAILS FOR:

Prepared in the Offices of:
Traffic Engineering and Safety Systems Branch
STATE OF NORTH CAROLINA DEPARTMENT OF TRANSPORTATION
Signal Management Section
122 N. McDowell St., Raleigh, NC 27603

NC 274 (BESSEMER CITY ROAD)
AT
SR 1334 (JENKINS DAIRY ROAD) &
SR 1135 (SHANNON BRADLEY ROAD)

DIVISION 12 GASTON COUNTY GASTONIA

PLAN DATE: JULY 2004	REVIEWED BY:		
PREPARED BY: WILLIAM HAIRSTON	REVIEWED BY:		
REVISIONS		INIT.	DATE

SEAL
NORTH CAROLINA PROFESSIONAL SEAL 022013 ENGINEER GEORGE C. BROWN
SIGNATURE DATE
SIG. INVENTORY NO. 12-0335T2

10-AUG-2004 15:44
S:\MS\Mgmt\Joyce\U2408\120335_2004xxxxa.dgn
11.0pes

METRIC	PROJECT REFERENCE NO.	SHEET NO.
	U-2408	SIG. 24

8 PHASE FULLY ACTUATED GASTONIA CITY SIGNAL SYSTEM

PHASING DIAGRAM

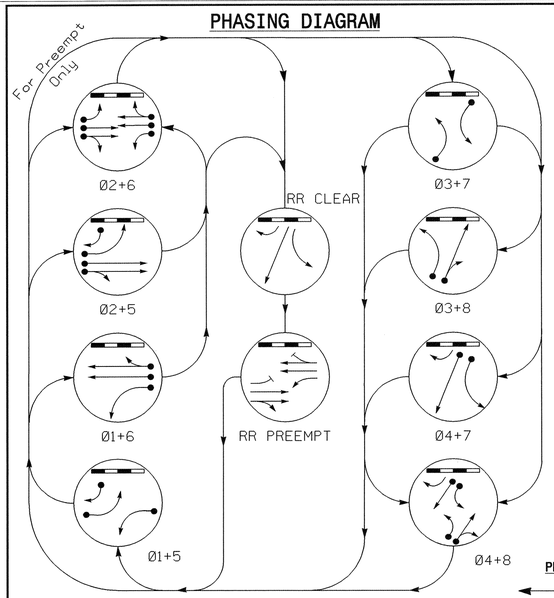

TABLE OF OPERATION

SIGNAL FACE	PHASE 01+5	01+6	02+5	02+6	03+7	03+8	04+7	04+8	RR CLEAR	RR PREEMPT	FLASH
21	↖R	R	←G	G	R	R	R	R	R	G	Y
22	R	R	G	G	R	R	R	R	R	G	Y
41	R	R	R	R	←R	R	↖G	G	←G	R	R
42	R→	R	R→	R	R	R	G	G	G	R	R
61	↖R	←G	R	G	R	R	R	R	R	G	Y
62	R	G	R	G	R	R	R	R	R	G	Y
81	R	R	R	R	←R	↖G	R	G	R	R	R
82	R	R	R	R	R	G	R	G	R	R	R
SIGN Ⓐ	OFF	OFF	OFF	OFF	OFF	OFF	OFF	OFF	ON	ON	*
SIGN Ⓑ	OFF	OFF	OFF	OFF	OFF	OFF	OFF	OFF	ON	ON	*

* SEE NOTE 10

SIGNAL FACE I.D.

Denotes L.E.D.

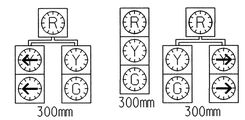

21, 41
61, 81

22
62
82

42

PLAN QUANTITIES

Pay Item	Meters
Signal Cable	500
Messenger Cable	0
Loop Lead-in Cable	1290

NOTES

1. Refer to "Roadway Standard Drawings NCDOT" dated January 2002 and "Standard Specifications for Roads and Structures" dated January 2002.
2. Omit Phase 1 during Phase 2 on.
3. Omit Phase 3 during Phase 4 on.
4. Omit Phase 5 during Phase 6 on.
5. Omit Phase 7 during Phase 8 on.
6. Program controller to clear from phase 2+6 to phase 1 and/or 5 by progressing through phase 4+8 (see Electrical Details).
7. Set all detector units to presence mode.
8. Maximum times shown in timing chart are for free run operation only. Coordinated signal system timing values shall supersede these values.
9. System data: Controller Asset #: 0335
10. Ensure flashing operation does not alter operation of blankout signs.
11. This location contains railroad preemption phasing. Do not program signal for late night flashing operation.

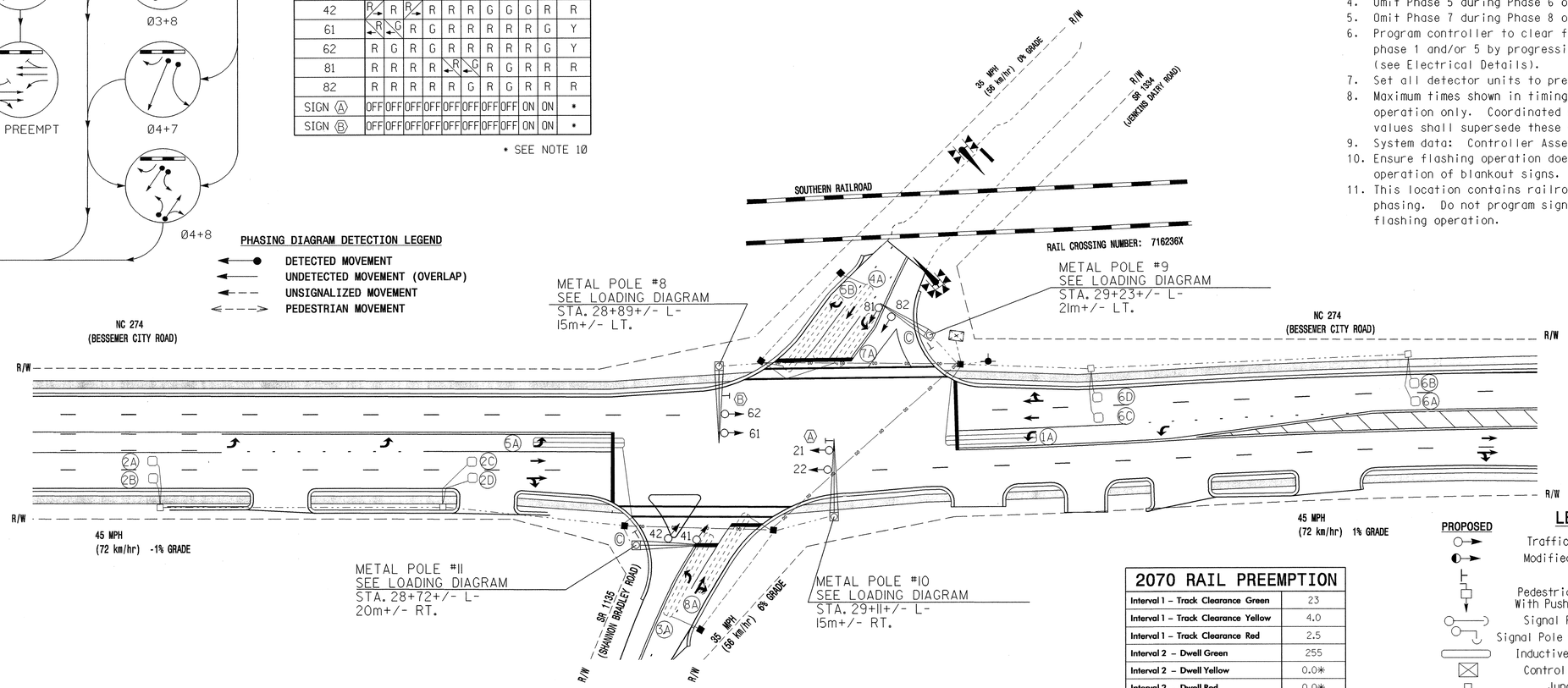

2070 RAIL PREEMPTION

Interval 1 – Track Clearance Green	23
Interval 1 – Track Clearance Yellow	4.0
Interval 1 – Track Clearance Red	2.5
Interval 2 – Dwell Green	255
Interval 2 – Dwell Yellow	0.0*
Interval 2 – Dwell Red	0.0*
Interval 5 – Exit Green	0
Interval 5 – Exit Yellow	0.0*
Interval 5 – Exit Red	0.0*
Delay Time	0
Min Green Before Pre	1
Ped Clear Before Pre	0
Yellow Clear Before Pre	5.0
Red Clear Before Pre	3.0
Dwell Min Time	10
Ped Clear Through Yellow	N

* Clearance time defaults to time used for phase during normal operation.

LEGEND

PROPOSED		EXISTING
	Traffic Signal Head	
	Modified Signal Head	N/A
	Sign	
	Pedestrian Signal Head With Push Button & Sign	
	Signal Pole with Guy	
	Signal Pole with Sidewalk Guy	
	Inductive Loop Detector	
	Controller & Cabinet	
	Junction Box	
	50mm Underground Conduit	
N/A	Right of Way with Marker	
	Directional Arrow	
	Pavement Marking Arrow	
	Metal Pole with Mast Arm	
N/A	Railroad Gate and Flasher	
N/A	Railroad Tracks	
Ⓐ	"NO LEFT TURN - TRAIN" LED Blankout Sign	Ⓐ
Ⓑ	"NO RIGHT TURN - TRAIN" LED Blankout Sign	Ⓑ
Ⓒ	"YIELD" Sign (R1-2)	Ⓒ
	Directional Drill 2 - 50mm Polyethylene Conduit	N/A

2070L TIMING CHART

FEATURE	PHASE 1	2	3	4	5	6	7	8
Min Green 1 *	7	12	7	7	7	12	7	7
Extension 1 *	1.0	2.0	1.0	1.0	1.0	2.0	1.0	1.0
Max Green 1 *	15	45	15	20	15	45	15	20
Yellow Clearance	5.0	5.0	4.0	4.0	5.0	5.0	4.0	4.0
Red Clearance	3.0	3.0	2.0	2.5	3.0	3.0	2.0	2.5
Walk 1 *	-	-	-	-	-	-	-	-
Don't Walk 1	-	-	-	-	-	-	-	-
Seconds Per Actuation *	-	-	-	-	-	-	-	-
Max Variable Initial *	-	-	-	-	-	-	-	-
Time Before Reduction *	-	-	-	-	-	-	-	-
Time To Reduce *	-	-	-	-	-	-	-	-
Minimum Gap	-	-	-	-	-	-	-	-
Recall Mode	-	MIN RECALL	-	-	-	MIN RECALL	-	-
Vehicle Call Memory	-	YELLOW	-	-	-	YELLOW	-	-
Dual Entry	-	-	-	ON	-	-	-	ON
Simultaneous Gap	ON	ON	ON	ON	ON	ON	ON	ON

* These values may be field adjusted. Do not adjust Min Green and Extension times for phases 2 and 6 lower than what is shown. Min Green for all other phases should not be lower than 4 seconds.

2070L LOOP & DETECTOR INSTALLATION

INDUCTIVE LOOPS					DETECTOR PROGRAMMING							
LOOP	SIZE (m)	TURNS	DISTANCE FROM STOPBAR (m)	NEW LOOP	PHASE	CALLING	EXTENSION	FULL TIME DELAY	SYSTEM LOOP	STRETCH TIME	DELAY TIME	NEW CARD
1A	1.8 X 18	2-4-2	+2	Y	1	Y	Y	-	-	-	15	Y
					6	Y	Y	-	-	-	-	Y
2A,2B	1.8 X 1.8	6	90	Y	2	Y	Y	-	-	1.8	-	Y
2C,2D	1.8 X 1.8	5	27	Y	2	Y	Y	-	-	-	-	Y
3A	1.8 X 18	2-4-2	+2	-	3	Y	Y	-	-	-	15	Y
					8	Y	Y	-	-	-	3	-
4A	1.8 X 18	2-4-2	0	-	4	Y	Y	-	-	-	-	-
5A	1.8 X 18	2-4-2	+2	Y	5	Y	Y	-	-	-	15	Y
					2	Y	Y	-	-	-	-	Y
5B	1.8 X 18	2-4-2	+2	-	5	Y	Y	-	-	-	15	-
6A,6B	1.8 X 1.8	4	90	Y	6	Y	Y	-	-	1.8	-	Y
6C,6D	1.8 X 1.8	4	27	Y	6	Y	Y	-	-	-	-	Y
7A	1.8 X 12	2-4-2	+1	-	7	Y	Y	-	-	-	15	Y
					4	Y	Y	-	-	-	3	-
8A	1.8 X 18	4	+2	-	8	Y	Y	-	-	-	10	-

Prepared in the Office of:

THE LPA GROUP TRANSPORTATION CONSULTANTS

THE LPA GROUP of North Carolina, p.a.
4904 PROFESSIONAL COURT, SUITE 201
Raleigh, North Carolina 27609

SIGNAL UPGRADE - FINAL DESIGN

Traffic Engineering and Safety Systems Branch
Signals and Geometrics Section
DIVISION OF HIGHWAYS STATE OF NORTH CAROLINA DEPARTMENT OF TRANSPORTATION

N.C. 274 (BESSEMER CITY ROAD) AT SR 1334 (JENKINS DAIRY ROAD) & SR 1135 (SHANNON BRADLEY ROAD)

DIVISION 12 GASTON COUNTY GASTONIA

PLAN DATE:	OCT. 30, 2003	REVIEWED BY:	R.DUBNICKA, P.E.
PREPARED BY:	RGL	REVIEWED BY:	

SCALE 5 0 10 1:500

REVISIONS	INIT.	DATE

SEAL: NORTH CAROLINA PROFESSIONAL SEAL 027742 ENGINEER ROBERT J. DUBNICKA

SIGNATURE Robert J. Dubnicka DATE 8-9-04

SIG. INVENTORY NO. 12-0335

09-AUG-2004 12:28
Y:\Traffic\WU2408\Signal Plans\SIG-3B.dgn
rdubnicka

PROJECT REFERENCE NO.	SHEET NO.
U-2408	SIG. 25

EDI MODEL 2010ECL CONFLICT MONITOR PROGRAMMING DETAIL

(remove jumpers and set switches as shown)

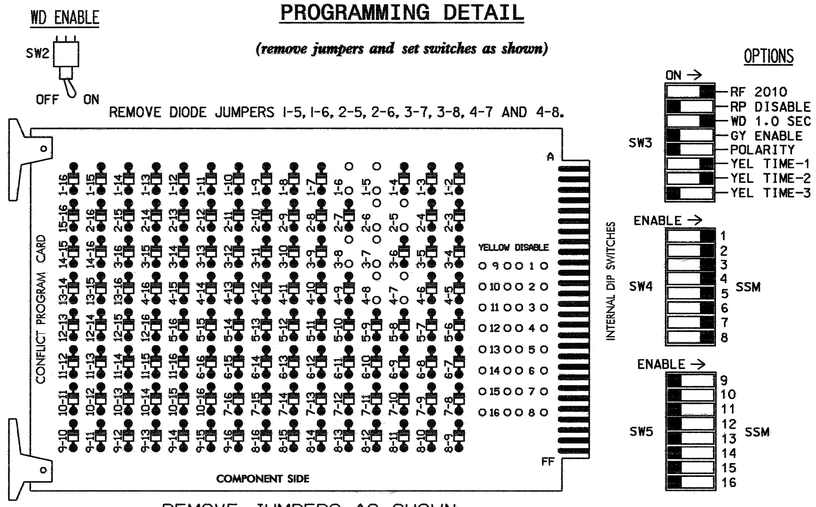

REMOVE JUMPERS AS SHOWN

■ = DENOTES POSITION OF SWITCH

NOTES:

1. CARD IS PROVIDED WITH ALL DIODE JUMPERS IN PLACE. REMOVAL OF ANY JUMPER ALLOWS ITS CHANNELS TO RUN CONCURRENTLY.
2. MAKE SURE JUMPERS SEL1-SEL5 ARE PRESENT ON THE MONITOR BOARD.

NOTES

1. TO PREVENT "FLASH-CONFLICT" PROBLEMS, INSERT RED FLASH PROGRAM BLOCKS FOR ALL UNUSED VEHICLE LOAD SWITCHES IN THE OUTPUT FILE. THE INSTALLER SHALL VERIFY THAT SIGNAL HEADS FLASH IN ACCORDANCE WITH THE SIGNAL PLANS.
2. ENSURE THAT RED ENABLE IS ACTIVE AT ALL TIMES DURING NORMAL OPERATION. TO PREVENT RED FAILURES ON UNUSED MONITOR CHANNELS, TIE UNUSED RED MONITOR INPUTS 9,10, 11,12,13,14,15 & 16 TO LOAD SWITCH AC+ PER THE CABINET MANUFACTURER'S INSTRUCTIONS.
3. PROGRAM CONTROLLER TO START UP IN PHASES 2 AND 6 GREEN.
4. ENABLE SIMULTANEOUS GAP-OUT FEATURE, ON CONTROLLER UNIT, FOR ALL PHASES.
5. PROGRAM PHASES 4 AND 8, ON CONTROLLER UNIT, FOR DUAL ENTRY.
6. THE CABINET AND CONTROLLER ARE PART OF THE GASTONIA CITY SIGNAL SYSTEM.

EQUIPMENT INFORMATION

CONTROLLER.....CONTRACTOR SUPPLIED 2070L
CABINET .....CONTRACTOR SUPPLIED 332
SOFTWARE .....ECONOLITE OASIS 3.00.81
CABINET MOUNT.....BASE
OUTPUT FILE POSITIONS...12
LOAD SWITCHES USED.....S1,S2,S3,S4,S5,S6,S7,S8
PHASES USED.....1,2,3,4,5,6,7,8
OVERLAPS.....NONE

FIELD CONNECTION HOOK-UP CHART

LOAD SWITCH NO.	S1	S2	S2P	S3	S4	S4P	S5	S6	S6P	S7	S8	S8P
PHASE	1	2	2 PED	3	4	4 PED	5	6	6 PED	7	8	8 PED
SIGNAL HEAD NO.	61	21,22	NU	81	41,42	NU	21,42	61,62	NU	41	81,82	NU
GREEN		130			103			136			109	
YELLOW		129			102			135			108	
RED	*	128		*	101		*	134		*	107	
RED ARROW												
YELLOW ARROW	126			117			132			123		
GREEN ARROW	127			118			133			124		

NU = NOT USED

* DENOTES INSTALL LOAD RESISTOR. SEE LOAD RESISTOR INSTALLATION DETAIL THIS PAGE.

BACK-UP PROTECTION PROGRAMMING DETAIL

(program controller as shown below)

1. FROM MAIN MENU PRESS '2' (PHASE CONTROL), THEN '1' (PHASE CONTROL FUNCTIONS). SCROLL TO THE BOTTOM OF THE MENU AND ENABLE DYNAMIC/BACKUP CONTROL FUNCTIONS 1,2,3, AND 4.
2. FROM PHASE CONTROL FUNCTIONS MENU PRESS '2' (DYNAMIC/BACKUP CONTROL FUNCTIONS).

```
DYNAMIC/BACKUP CONTROL FUNCTION #01
                 OVERLAPS:¦ABCDEFGHIJKLMNOP
IF OVERLAPS ARE ACTIVE ¦
OR          PHASES:¦123456789101112131415 16
IF PHASES ARE ON¦ X
OMIT PHASES     ¦X
CALL PHASES     ¦  X
```

PRESS 'NEXT'

```
DYNAMIC/BACKUP CONTROL FUNCTION #02
                 OVERLAPS:¦ABCDEFGHIJKLMNOP
IF OVERLAPS ARE ACTIVE ¦
OR          PHASES:¦123456789101112131415 16
IF PHASES ARE ON¦  X
OMIT PHASES     ¦ X
CALL PHASES     ¦
```

PRESS 'NEXT'

```
DYNAMIC/BACKUP CONTROL FUNCTION #03
                 OVERLAPS:¦ABCDEFGHIJKLMNOP
IF OVERLAPS ARE ACTIVE ¦
OR          PHASES:¦123456789101112131415 16
IF PHASES ARE ON¦    X
OMIT PHASES     ¦   X
CALL PHASES     ¦  X
```

PRESS 'NEXT'

```
DYNAMIC/BACKUP CONTROL FUNCTION #04
                 OVERLAPS:¦ABCDEFGHIJKLMNOP
IF OVERLAPS ARE ACTIVE ¦
OR          PHASES:¦123456789101112131415 16
IF PHASES ARE ON¦      X
OMIT PHASES     ¦     X
CALL PHASES     ¦
```

BACKUP PROTECTION PROGRAMMING COMPLETE

INPUT FILE POSITION LAYOUT

(front view)

		1	2	3	4	5	6	7	8	9	10	11	12	13	14
FILE "I"	U	SLOT EMPTY	Ø1 1A	Ø2 2A,2B	SLOT EMPTY	SLOT EMPTY	Ø3 3A	Ø4 4A	SLOT EMPTY	SLOT EMPTY	SLOT EMPTY	SLOT EMPTY	SLOT EMPTY	SLOT EMPTY	FS DC ISOLATOR
	L		Ø6 1A	Ø2 2C,2D			Ø8 3A	NOT USED							ST DC ISOLATOR
FILE "J"	U	Ø5 5B	Ø5 5A	Ø6 6A,6B	SLOT EMPTY	SLOT EMPTY	Ø7 7A	Ø8 8A	SLOT EMPTY	SLOT EMPTY	SLOT EMPTY	SLOT EMPTY	SLOT EMPTY	SLOT EMPTY	PRE1 AC ISOLATOR
	L	NOT USED	Ø2 5A	Ø6 6C,6D			Ø4 7A	NOT USED							NOT USED

EX.: 1A, 2A, ETC. = LOOP NO.'S

FS = FLASH SENSE
ST = STOP TIME
PRE = PREEMPT

INPUT FILE CONNECTION & PROGRAMMING CHART

LOOP NO.	LOOP TERMINAL	INPUT FILE POS.	PIN NO.	INPUT ASSIGNMENT NO.	DETECTOR NO.	NEMA PHASE	CALL	EXTEND	FULL TIME DELAY	STRETCH TIME	DELAY TIME
1A[1]	TB2-5,6	I2U	39	1	2	1	Y	Y			15
	TB2-7,8	I2L	43	5	12	6	Y	Y			
2A,2B	TB2-9,10	I3U	63	25	32	2	Y	Y		1.8	
2C,2D	TB2-11,12	I3L	76	38	42	2	Y	Y			
3A[2]	TB4-9,10	I6U	41	3	4	3	Y	Y			15
	TB4-11,12	I6L	45	7	14	8	Y	Y			3
4A	TB6-1,2	I7U	65	27	34	4	Y	Y			
5B	TB3-1,2	J1U	55	17	5	5	Y	Y			15
5A[3]	TB3-5,6	J2U	40	2	6	5	Y	Y			15
	TB3-7,8	J2L	44	6	16	2	Y	Y			
6A,6B	TB3-9,10	J3U	64	26	36	6	Y	Y		1.8	
6C,6D	TB3-11,12	J3L	77	39	46	6	Y	Y			
7A[4]	TB5-9,10	J6U	42	4	8	7	Y	Y			15
	TB5-11,12	J6L	46	8	18	4	Y	Y			3
8A	TB7-1,2	J7U	66	28	38	8	Y	Y			10

[1] ADD JUMPERS FROM TB2-5 TO TB2-7, AND FROM TB2-6 TO TB2-8.
[2] ADD JUMPERS FROM TB4-9 TO TB4-11, AND FROM TB4-10 TO TB4-12.
[3] ADD JUMPERS FROM TB3-5 TO TB3-7, AND FROM TB3-6 TO TB3-8.
[4] ADD JUMPERS FROM TB5-9 TO TB5-11, AND FROM TB5-10 TO TB5-12.

INPUT FILE POSITION LEGEND: J2L
FILE J
SLOT 2
LOWER

LOAD RESISTOR INSTALLATION DETAIL

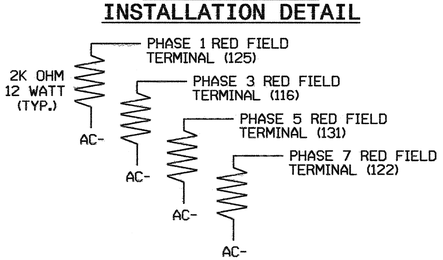

NOTE: THE PURPOSE OF THESE RESISTORS IS TO LOAD THE CHANNEL RED MONITOR INPUTS IN ORDER FOR THE SIGNAL SEQUENCE MONITOR TO USE THE FULL SIGNAL SEQUENCE MONITORING CAPABILITY ON CHANNELS THAT DO NOT USE THE RED DISPLAY IN THE FIELD.

THIS ELECTRICAL DETAIL IS FOR
THE SIGNAL DESIGN: 12-0335
DESIGNED: 10/30/03
SEALED: 08/09/04
REVISED:

SIGNAL UPGRADE - FINAL DESIGN - SHEET 1 OF 2

ELECTRICAL AND PROGRAMMING DETAILS FOR:

Prepared in the Offices of:
Traffic Engineering and Safety Systems Branch
STATE OF NORTH CAROLINA DEPARTMENT OF TRANSPORTATION
Signal Management Section
122 N. McDowell St., Raleigh, NC 27603

NC 274 (BESSEMER CITY ROAD)
AT
SR 1334 (JENKINS DAIRY ROAD) &
SR 1135 (SHANNON BRADLEY ROAD)

DIVISION 12 GASTON COUNTY GASTONIA

PLAN DATE: JULY 2004 REVIEWED BY: T. Jyot
PREPARED BY: WILLIAM HAIRSTON REVIEWED BY:

REVISIONS	INIT.	DATE

SEAL
NORTH CAROLINA PROFESSIONAL SEAL 022013 ENGINEER GEORGE C. BROWN
George C. Brown 8/12/04
SIGNATURE DATE
SIG. INVENTORY NO. 12-0335

10-AUG-2004 15:49
S:\ES\Sgmt\TJoyce\U2408\12035_2004xxxxb.dgn
T.Joyce

PROJECT REFERENCE NO.	SHEET NO.
U-2408	SIG. 26

RAILROAD PREEMPTION PROGRAMMING DETAIL

(program controller as shown below)

FROM MAIN MENU PRESS 'A' (PREEMPTION), THEN '1' (STANDARD PREEMPTIONS).

```
   PREEMPTION  #1  SETTINGS (NEXT:1-10)
INTERVAL/TIMING ¦  CLEAR/DWELL PHASES
  GRN YEL  RED  ¦123456789101112131415 16
1  23  4.0  2.5 ¦   X  X
2 255  0.0  0.0 ¦ X   X
3   0  0.0  0.0 ¦
4   0  0.0  0.0 ¦
5   0  0.0  0.0 ¦
EXIT CALLS      ¦
            OPTIONS
PRIORITY (Y/N TO SELECT) ............HIGH
DELAY TIMER (0-255 SEC) .............0
MIN GREEN BEFORE PRE (0= DEFAULT)....1
PED CLEAR BEFORE PRE (0= DEFAULT)....0
YELLOW CLEAR BEFORE PRE (0= DEFAULT).5.0
RED CLEAR BEFORE PRE (0= DEFAULT)....3.0
DWELL MIN TIMER (0-255 SEC) .........10
DWELL MAX TIMER (0=OFF,1-255MIN) ....0
DWELL HOLD-OVER TIMER (0-255) .......0
LATCH CALL? .........................N
LINK TO NEXT PREEMPT? ...............N
ENABLE BACKUP PROTECTION? ...........N
HOLD CLEAR 1 PHASES DURING DELAY? ...N
FAST GREEN FLASH DWELL PHASES? ......N
PED CLEARANCE THROUGH YELLOW? .......N
INHIBIT OVERLAP GREEN EXTENSION? ....N
SERVICE DURING SOFTWARE FLASH? ......N
REST IN RED DURING DWELL INTERVAL? ..N
FLASH DWELL INTERVAL? ...............N
ALLOW PEDS IN DWELL INTERVAL? .......N
RE-TIME DWELL INTERVAL? .............N
OVERLAPS:                ¦ABCDEFGHIJKLMNOP
DWELL INT FLASH YELLOW   ¦
OMIT OVERLAPS:           ¦
```

RAILROAD PREEMPTION WIRING DETAIL

(wire as shown below)

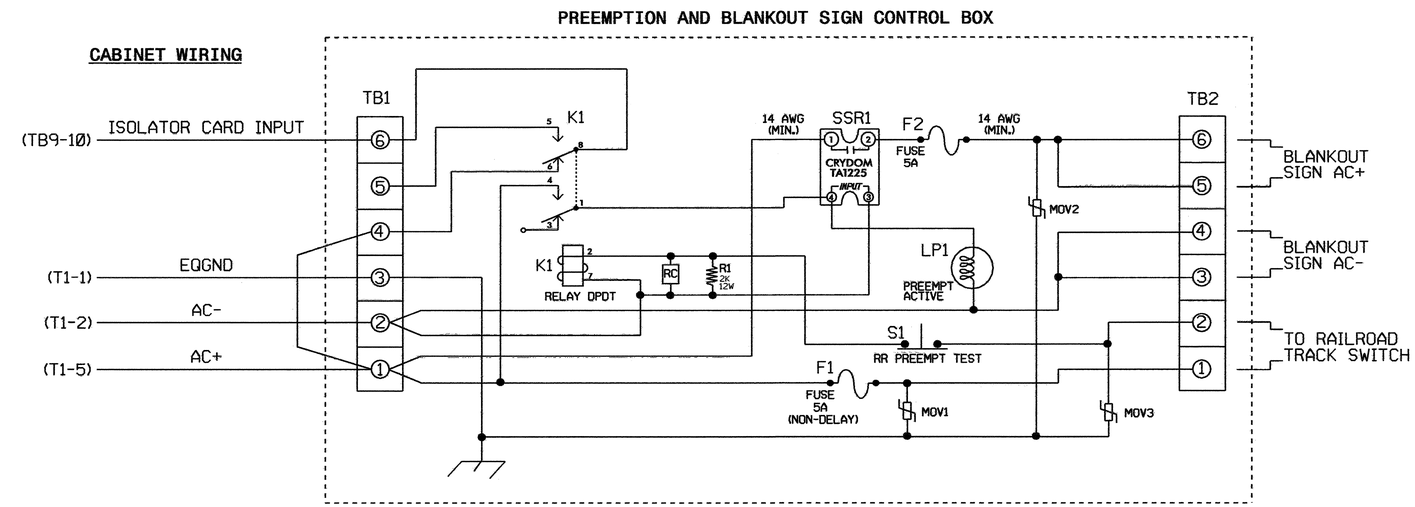

NOTES

1. RELAY K1 IS SHOWN IN THE ENERGIZED (PREEMPT NOT ACTIVE) NORMAL OPERATION STATE.
2. RELAY K1 IS A DPDT WITH 120VAC COIL. POTTER & BRUMFIELD KRP11AG WITH OCTAL BASE OR APPROVED EQUIVALENT.
3. RELAY SSR1 IS A SPST (NORMALLY OPEN) SOLID STATE RELAY WITH AC INPUT AND AC (25 AMP) OUTPUT. CRYDOM TA1225 OR APPROVED EQUIVALENT.
4. AC ISOLATOR CARD SHALL ACTIVATE PREEMPTION UPON REMOVAL OF AC+ FROM THE INPUT (AS SHOWN ABOVE).
5. RESISTOR IS VALUED AT 2K OHM, 12 WATT. CLAROSTAT PART NO. VPR10F-2K OR APPROVED EQUIVALENT.
6. RC NETWORK IS VALUED AT .1 MICROFARAD, 100 OHM.
7. IF REPLACEMENT MOVS ARE NEEDED, GE PART NO. V150LA20A MAY BE USED.
8. PREEMPTION AND BLANKOUT SIGN CONTROL BOX IS A CONTROL TECHNOLOGIES PART NO. 2299-101 OR APPROVED EQUIVALENT.
9. IMPORTANT!! A JUMPER MUST BE ADDED BETWEEN INPUT FILE TERMINALS J14-E AND J14-K IF NOT ALREADY PRESENT. ALSO, TERMINAL TB9-12 (ON INPUT PANEL) SHALL BE CONNECTED TO AC NEUTRAL (JUMPER MAY HAVE TO BE ADDED).

FRONT VIEW

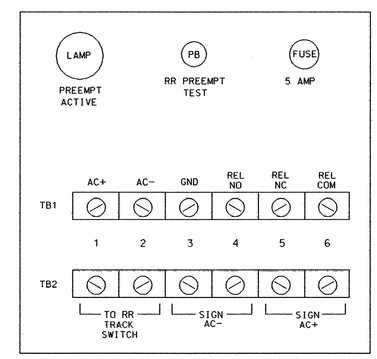

THIS ELECTRICAL DETAIL IS FOR
THE SIGNAL DESIGN: 12-0335
DESIGNED: 10/30/03
SEALED: 08/09/04
REVISED:

SIGNAL UPGRADE - FINAL DESIGN - SHEET 2 OF 2

ELECTRICAL AND PROGRAMMING DETAILS FOR:

Prepared in the Offices of:

Traffic Engineering and Safety Systems Branch
Signal Management Section
122 N. McDowell St., Raleigh, NC 27603

NC 274 (BESSEMER CITY ROAD)
AT
SR 1334 (JENKINS DAIRY ROAD) &
SR 1135 (SHANNON BRADLEY ROAD)

DIVISION 12 GASTON COUNTY GASTONIA

PLAN DATE: JULY 2004	REVIEWED BY: TJA		
PREPARED BY: WILLIAM HAIRSTON	REVIEWED BY:		
REVISIONS		INIT.	DATE

SEAL

NORTH CAROLINA PROFESSIONAL SEAL 022013 ENGINEER GEORGE C. BROWN

George C. Brown 8/9/04
SIGNATURE DATE

SIG. INVENTORY NO. 12-0335

10-AUG-2004 15:45
S:\MS\dgnlt\Joyce\U2408\12035_2004xxxxa.dgn
$$$$opes

METRIC	PROJECT REFERENCE NO.	SHEET NO.
	U-2408	SIG. 27

PHASING DIAGRAM

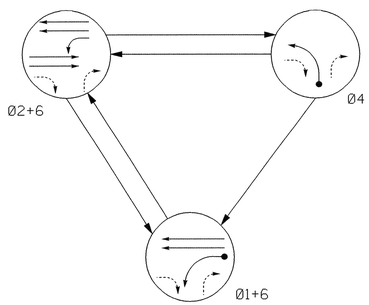

PHASING DIAGRAM DETECTION LEGEND

- DETECTED MOVEMENT
- UNDETECTED MOVEMENT (OVERLAP)
- UNSIGNALIZED MOVEMENT
- PEDESTRIAN MOVEMENT

TABLE OF OPERATION

SIGNAL FACE	PHASE Ø1+6	PHASE Ø2+6	PHASE Ø4	FLASH
21,22	R	G	R	Y
41,42	R	R	G	R
61	G	G	R	Y
62	G	G	R	Y

SIGNAL FACE I.D.

Denotes L.E.D.

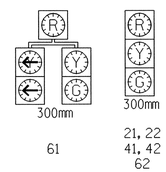

PLAN QUANTITIES

Pay Item	Meters
Signal Cable	145
Messenger Cable	95
Loop Lead-in Cable	70

3 PHASE SEMI ACTUATED ISOLATED

NOTES

1. Refer to "Roadway Standard Drawings NCDOT" dated January 2002 and "Standard Specifications for Roads and Structures" dated January 2002.
2. Set all detector units to presence mode.
3. Do not program for late night flashing operation unless otherwise directed by the engineer.

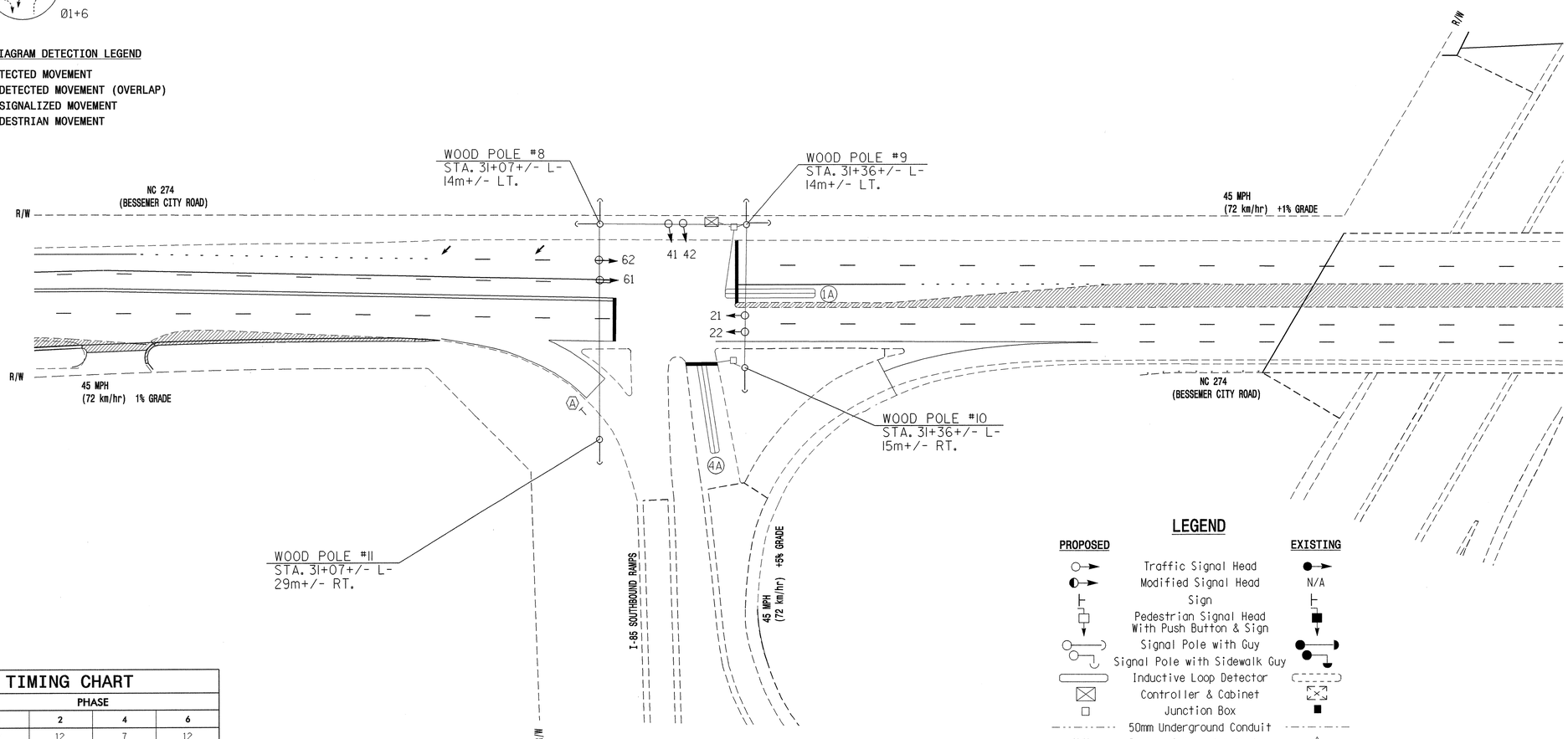

LEGEND

PROPOSED		EXISTING
	Traffic Signal Head	
	Modified Signal Head	N/A
	Sign	
	Pedestrian Signal Head With Push Button & Sign	
	Signal Pole with Guy	
	Signal Pole with Sidewalk Guy	
	Inductive Loop Detector	
	Controller & Cabinet	
	Junction Box	
	50mm Underground Conduit	
N/A	Right of Way with Marker	
	Directional Arrow	
	Pavement Marking Arrow	
	"YIELD" Sign (R1-2)	
	Construction Zone	

2070L TIMING CHART

FEATURE	PHASE 1	PHASE 2	PHASE 4	PHASE 6
Min Green 1 *	7	12	7	12
Extension 1 *	1.0	0.0	1.0	0.0
Max Green 1 *	20	45	15	45
Yellow Clearance	4.0	4.7	4.0	4.7
Red Clearance	1.5	1.0	1.5	1.0
Walk 1 *	-	-	-	-
Don't Walk 1	-	-	-	-
Seconds Per Actuation *	-	-	-	-
Max Variable Initial *	-	-	-	-
Time Before Reduction *	-	-	-	-
Time To Reduce *	-	-	-	-
Minimum Gap	-	-	-	-
Recall Mode	-	MAX RECALL	-	MAX RECALL
Vehicle Call Memory	-	YELLOW	-	YELLOW
Dual Entry	-	-	-	-
Simultaneous Gap	ON	ON	ON	ON

* These values may be field adjusted. Do not adjust Min Green and Extension times for phases 2 and 6 lower than what is shown. Min Green for all other phases should not be lower than 4 seconds.

2070L LOOP & DETECTOR INSTALLATION

INDUCTIVE LOOPS					DETECTOR PROGRAMMING						
LOOP	SIZE (m)	TURNS	DISTANCE FROM STOPBAR (m)	NEW LOOP	PHASE	CALLING	EXTENSION	FULL TIME DELAY	SYSTEM LOOP	STRETCH TIME	DELAY TIME	NEW CARD
1A	1.8 X 18	2-4-2	+2	Y	1	Y	Y	-	-	-	15	Y
4A	1.8 X 18	2-4-2	0	Y	4	Y	Y	-	-	-	-	Y

Prepared in the Office of:

THE LPA GROUP TRANSPORTATION CONSULTANTS

THE LPA GROUP of North Carolina, p.a.
4904 PROFESSIONAL COURT, SUITE 201
Raleigh, North Carolina 27609

SIGNAL UPGRADE - TEMPORARY DESIGN 1

Traffic Engineering and Safety Systems Branch
STATE OF NORTH CAROLINA DEPARTMENT OF TRANSPORTATION
Signals and Geometrics Section

SCALE 5 0 10 1:500

N.C. 274 (BESSEMER CITY ROAD) AT I-85 SOUTHBOUND RAMP & LOOP

DIVISION 12 GASTON COUNTY GASTONIA

PLAN DATE: OCT. 30, 2003 REVIEWED BY: R.DUBNICKA,P.E.

PREPARED BY: RGL REVIEWED BY:

REVISIONS	INIT.	DATE

SEAL

NORTH CAROLINA PROFESSIONAL SEAL 027742 ENGINEER ROBERT J. DUBNICKA

SIGNATURE DATE 8-9-04

SIG. INVENTORY NO. 12-0931T1

09-AUG-2004 12:28
Y:\Traffic\U2408\Signal Plans\SIG-4.dgn
rdubnicka

METRIC	PROJECT REFERENCE NO.	SHEET NO.
	U-2408	SIG. 28

PHASING DIAGRAM

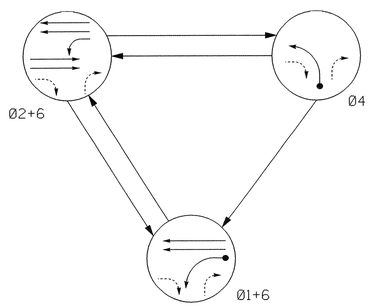

PHASING DIAGRAM DETECTION LEGEND

- DETECTED MOVEMENT
- UNDETECTED MOVEMENT (OVERLAP)
- UNSIGNALIZED MOVEMENT
- PEDESTRIAN MOVEMENT

TABLE OF OPERATION

SIGNAL FACE	PHASE Ø1+6	PHASE Ø2+6	PHASE Ø4	FLASH
21,22	R	G	R	Y
41,42	R	R	G	R
61	G	G	R	Y
62	G	G	R	Y

SIGNAL FACE I.D.

Denotes L.E.D.

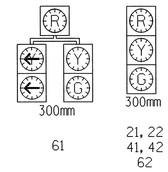

PLAN QUANTITIES

Pay Item	Meters
Signal Cable	–
Messenger Cable	–
Loop Lead-in Cable	–

3 PHASE
SEMI ACTUATED
ISOLATED

NOTES

1. Refer to "Roadway Standard Drawings NCDOT" dated January 2002 and "Standard Specifications for Roads and Structures" dated January 2002.
2. Set all detector units to presence mode.
3. Do not program for late night flashing operation unless otherwise directed by the engineer.

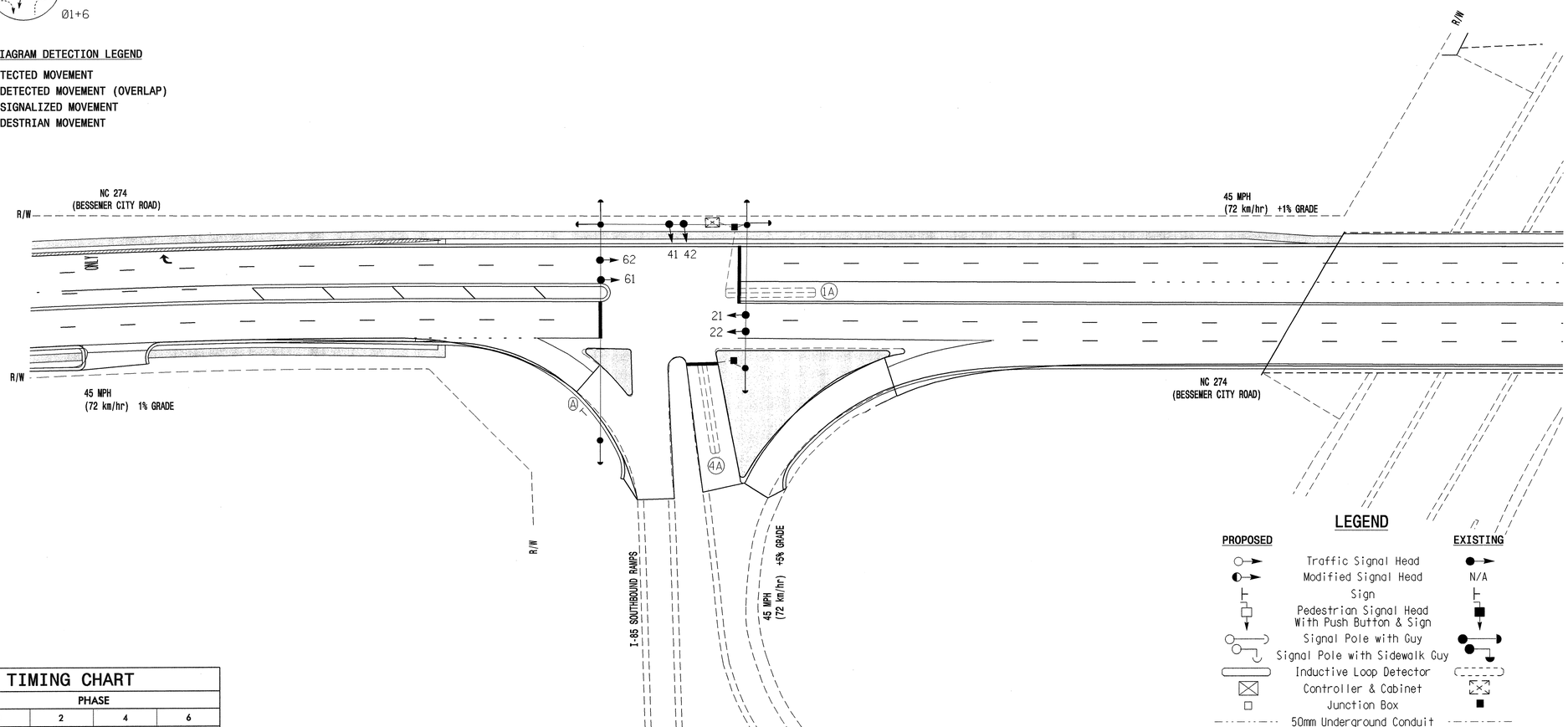

LEGEND

PROPOSED		EXISTING
	Traffic Signal Head	
	Modified Signal Head	N/A
	Sign	
	Pedestrian Signal Head With Push Button & Sign	
	Signal Pole with Guy	
	Signal Pole with Sidewalk Guy	
	Inductive Loop Detector	
	Controller & Cabinet	
	Junction Box	
	50mm Underground Conduit	
N/A	Right of Way with Marker	
	Directional Arrow	
	Pavement Marking Arrow	
	"YIELD" Sign (R1-2)	

2070L TIMING CHART

FEATURE	PHASE 1	PHASE 2	PHASE 4	PHASE 6
Min Green 1 *	7	12	7	12
Extension 1 *	1.0	0.0	1.0	0.0
Max Green 1 *	20	45	15	45
Yellow Clearance	4.0	4.7	4.0	4.7
Red Clearance	2.0	1.5	1.5	1.5
Walk 1 *	-	-	-	-
Don't Walk 1	-	-	-	-
Seconds Per Actuation *	-	-	-	-
Max Variable Initial *	-	-	-	-
Time Before Reduction *	-	-	-	-
Time To Reduce *	-	-	-	-
Minimum Gap	-	-	-	-
Recall Mode	-	MAX RECALL	-	MAX RECALL
Vehicle Call Memory	-	YELLOW	-	YELLOW
Dual Entry	-	-	-	-
Simultaneous Gap	ON	ON	ON	ON

* These values may be field adjusted. Do not adjust Min Green and Extension times for phases 2 and 6 lower than what is shown. Min Green for all other phases should not be lower than 4 seconds.

2070L LOOP & DETECTOR INSTALLATION

INDUCTIVE LOOPS					DETECTOR PROGRAMMING							
LOOP	SIZE (m)	TURNS	DISTANCE FROM STOPBAR (m)	NEW LOOP	PHASE	CALLING	EXTENSION	FULL TIME DELAY	SYSTEM LOOP	STRETCH TIME	DELAY TIME	NEW CARD
1A	1.8 X 18	2-4-2	+2	-	1	Y	Y	-	-	-	15	-
4A	1.8 X 18	2-4-2	0	-	4	Y	Y	-	-	-	-	-

Prepared in the Office of:

THE LPA GROUP TRANSPORTATION CONSULTANTS

THE LPA GROUP of North Carolina, p.a.
4904 PROFESSIONAL COURT, SUITE 201
Raleigh, North Carolina 27609

SIGNAL UPGRADE - TEMPORARY DESIGN 2

Traffic Engineering and Safety Systems Branch
Signals and Geometrics Section
Department of Transportation
State of North Carolina

SCALE 5 0 10
1:500

N.C. 274 (BESSEMER CITY ROAD) AT I-85 SOUTHBOUND RAMP & LOOP

DIVISION 12 GASTON COUNTY GASTONIA

PLAN DATE: OCT. 30, 2003 REVIEWED BY: R.DUBNICKA, P.E.

PREPARED BY: RGL REVIEWED BY:

REVISIONS	INIT.	DATE

SEAL

NORTH CAROLINA PROFESSIONAL SEAL 027742 ENGINEER ROBERT J. DUBNICKA

Robert J. Dubnicka 8-9-04
SIGNATURE DATE

SIG. INVENTORY NO. 12-0931T2

09-AUG-2004 12:28
T:\Traffic\U2408\Signal Plans\SIG-4A.dgn
rdubnicka

PROJECT REFERENCE NO.	SHEET NO.
U-2408	SIG.29

EDI MODEL 2010ECL CONFLICT MONITOR PROGRAMMING DETAIL

(remove jumpers and set switches as shown)

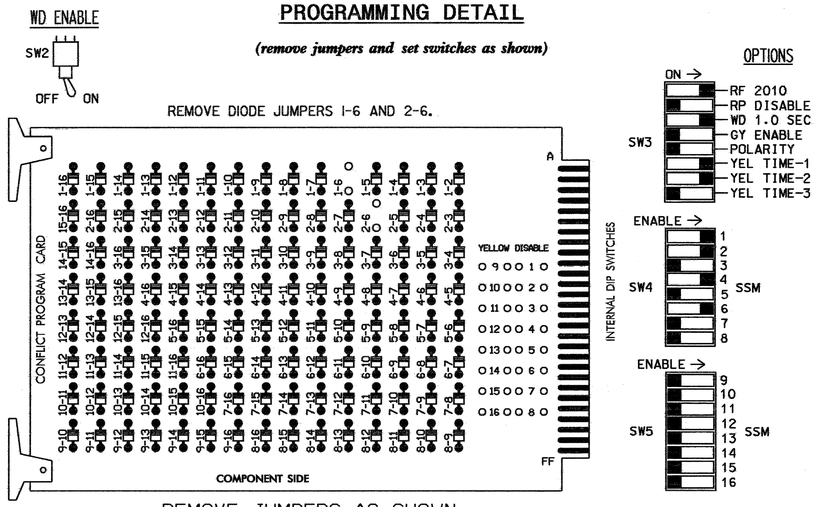

REMOVE JUMPERS AS SHOWN

■ = DENOTES POSITION OF SWITCH

NOTES:

1. CARD IS PROVIDED WITH ALL DIODE JUMPERS IN PLACE. REMOVAL OF ANY JUMPER ALLOWS ITS CHANNELS TO RUN CONCURRENTLY.
2. MAKE SURE JUMPERS SEL1-SEL5 ARE PRESENT ON THE MONITOR BOARD.

NOTES

1. TO PREVENT "FLASH-CONFLICT" PROBLEMS, INSERT RED FLASH PROGRAM BLOCKS FOR ALL UNUSED VEHICLE LOAD SWITCHES IN THE OUTPUT FILE. THE INSTALLER SHALL VERIFY THAT SIGNAL HEADS FLASH IN ACCORDANCE WITH THE SIGNAL PLANS.
2. ENSURE THAT RED ENABLE IS ACTIVE AT ALL TIMES DURING NORMAL OPERATION. TO PREVENT RED FAILURES ON UNUSED MONITOR CHANNELS, TIE UNUSED RED MONITOR INPUTS 3,5,7, 8,9,10,11,12,13,14,15 & 16 TO LOAD SWITCH AC+ PER THE CABINET MANUFACTURER'S INSTRUCTIONS.
3. PROGRAM CONTROLLER TO START UP IN PHASES 2 AND 6 GREEN.
4. ENABLE SIMULTANEOUS GAP-OUT FEATURE, ON CONTROLLER UNIT, FOR ALL PHASES.

EQUIPMENT INFORMATION

CONTROLLER.....CONTRACTOR SUPPLIED 2070L
CABINET .....CONTRACTOR SUPPLIED 332
SOFTWARE .....ECONOLITE OASIS
CABINET MOUNT.....BASE
OUTPUT FILE POSITIONS...12
LOAD SWITCHES USED.....S1,S2,S4,S6
PHASES USED.....1,2,4,6
OVERLAPS.....NONE

FIELD CONNECTION HOOK-UP CHART

LOAD SWITCH NO.	S1	S2	S2P	S3	S4	S4P	S5	S6	S6P	S7	S8	S8P
PHASE	1	2	2 PED	3	4	4 PED	5	6	6 PED	7	8	8 PED
SIGNAL HEAD NO.	61	21,22	NU	NU	41,42	NU	NU	61,62	NU	NU	NU	NU
GREEN		130			103			136				
YELLOW		129			102			135				
RED	*	128			101			134				
RED ARROW												
YELLOW ARROW	126											
GREEN ARROW	127											

NU = NOT USED

* DENOTES INSTALL LOAD RESISTOR. SEE LOAD RESISTOR INSTALLATION DETAIL THIS PAGE.

INPUT FILE POSITION LAYOUT

(front view)

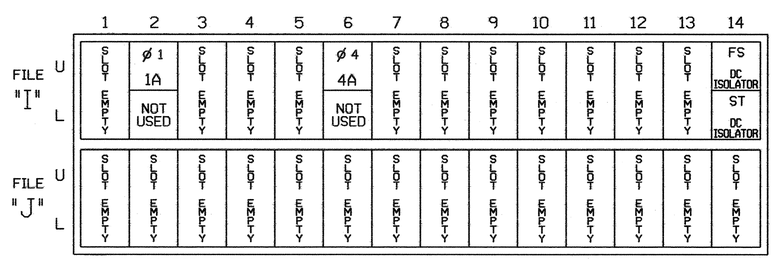

EX.: 1A, 2A, ETC. = LOOP NO.'S

FS = FLASH SENSE
ST = STOP TIME

INPUT FILE CONNECTION & PROGRAMMING CHART

LOOP NO.	LOOP TERMINAL	INPUT FILE POS.	PIN NO.	INPUT ASSIGNMENT NO.	DETECTOR NO.	NEMA PHASE	CALL	EXTEND	FULL TIME DELAY	STRETCH TIME	DELAY TIME
1A	TB2-5,6	I2U	39	1	2	1	Y	Y			15
4A	TB4-9,10	I6U	41	3	4	4	Y	Y			

INPUT FILE POSITION LEGEND: J2L
FILE J
SLOT 2
LOWER

THIS ELECTRICAL DETAIL IS FOR
THE SIGNAL DESIGN: 12-0931T1,T2
DESIGNED: 10/30/03
SEALED: 08/09/04
REVISED:

LOAD RESISTOR INSTALLATION DETAIL

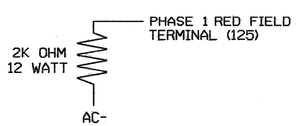

NOTE: THE PURPOSE OF THIS RESISTOR IS TO LOAD THE CHANNEL RED MONITOR INPUT IN ORDER FOR THE SIGNAL SEQUENCE MONITOR TO USE THE FULL SIGNAL SEQUENCE MONITORING CAPABILITY ON CHANNELS THAT DO NOT USE THE RED DISPLAY IN THE FIELD.

SIGNAL UPGRADE - TEMPORARY DESIGN 1,2

ELECTRICAL AND PROGRAMMING DETAILS FOR:

Prepared in the Offices of:
Traffic Engineering and Safety Systems Branch
STATE OF NORTH CAROLINA DEPARTMENT OF TRANSPORTATION
Signals Management Section
122 N. McDowell St., Raleigh, NC 27603

NC 274 (BESSEMER CITY ROAD)
AT
I-85 SOUTHBOUND RAMP & LOOP

DIVISION 12 GASTON COUNTY GASTONIA

PLAN DATE: JULY 2004 REVIEWED BY: T Joyce
PREPARED BY: WILLIAM HAIRSTON REVIEWED BY:

REVISIONS	INIT.	DATE

SEAL
NORTH CAROLINA PROFESSIONAL SEAL 022013 ENGINEER GEORGE C. BROWN
SIGNATURE DATE 8/11/04
SIG. INVENTORY NO. 12-0931T1,T2

10-AUG-2004 15:51
S:\RE\SMgtm\tJoyce\U2408\12031_2004xxxxs.dgn
10-2003

METRIC	PROJECT REFERENCE NO.	SHEET NO.
	U-2408	SIG. 30

PHASING DIAGRAM

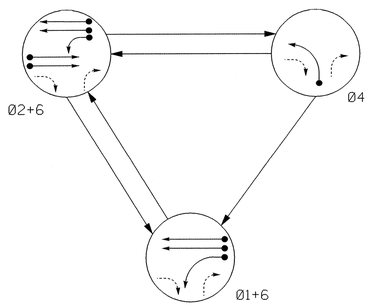

PHASING DIAGRAM DETECTION LEGEND

- DETECTED MOVEMENT
- UNDETECTED MOVEMENT (OVERLAP)
- UNSIGNALIZED MOVEMENT
- PEDESTRIAN MOVEMENT

TABLE OF OPERATION

SIGNAL FACE	PHASE Ø1+6	PHASE Ø2+6	PHASE Ø4	FLASH
21,22	R	G	R	Y
41,42	R	R	G	R
61	G	G	R	Y
62	G	G	R	Y

SIGNAL FACE I.D.

Denotes L.E.D.

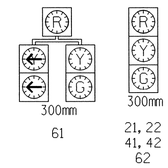

PLAN QUANTITIES

Pay Item	Meters
Signal Cable	140
Messenger Cable	0
Loop Lead-in Cable	505

3 PHASE
FULLY ACTUATED
GASTONIA CITY SIGNAL SYSTEM

NOTES

1. Refer to "Roadway Standard Drawings NCDOT" dated January 2002 and "Standard Specifications for Roads and Structures" dated January 2002.
2. Set all detector units to presence mode.
3. Maximum times shown in timing chart are for free operation only. Coordinated signal system timing values shall supersede these valuse.
4. Closed loop system data: Controller Asset #: 0931
5. During coordination, Phase 1 may be lagged.
6. Do not program for late night flashing operation unless otherwise directed by the engineer.

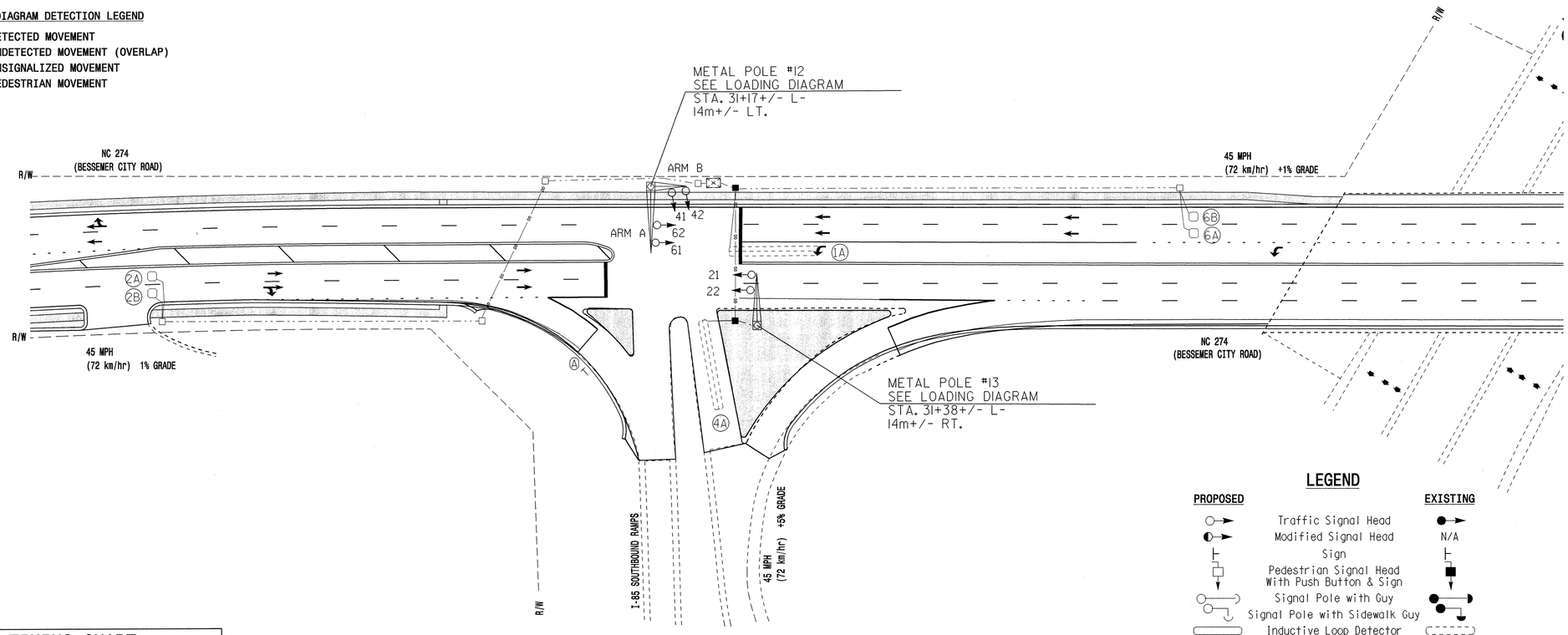

LEGEND

PROPOSED		EXISTING
	Traffic Signal Head	
	Modified Signal Head	N/A
	Sign	
	Pedestrian Signal Head With Push Button & Sign	
	Signal Pole with Guy	
	Signal Pole with Sidewalk Guy	
	Inductive Loop Detector	
	Controller & Cabinet	
	Junction Box	
	50mm Underground Conduit	
N/A	Right of Way with Marker	
	Directional Arrow	
	Pavement Marking Arrow	
	Metal Pole with Mast Arm	
	"YIELD" Sign (R1-2)	
	Directional Drill 2 - 50mm Polyethylene Conduit	N/A

2070L TIMING CHART

FEATURE	PHASE 1	PHASE 2	PHASE 4	PHASE 6
Min Green 1 *	7	12	7	12
Extension 1 *	1.0	6.0	1.0	6.0
Max Green 1 *	15	90	20	90
Yellow Clearance	4.0	4.7	4.0	4.7
Red Clearance	1.5	1.5	1.5	1.5
Walk 1 *	-	-	-	-
Don't Walk 1	-	-	-	-
Seconds Per Actuation *	-	1.8	-	1.8
Max Variable Initial *	-	34	-	34
Time Before Reduction *	-	15	-	15
Time To Reduce *	-	30	-	30
Minimum Gap	-	3.0	-	3.0
Recall Mode	-	MIN RECALL	-	MIN RECALL
Vehicle Call Memory	-	YELLOW	-	YELLOW
Dual Entry	-	-	-	-
Simultaneous Gap	ON	ON	ON	ON

* These values may be field adjusted. Do not adjust Min Green and Extension times for phases 2 and 6 lower than what is shown. Min Green for all other phases should not be lower than 4 seconds.

2070L LOOP & DETECTOR INSTALLATION

INDUCTIVE LOOPS					DETECTOR PROGRAMMING						
LOOP	SIZE (m)	TURNS	DISTANCE FROM STOPBAR (m)	NEW LOOP	PHASE	CALLING	EXTENSION	FULL TIME DELAY	SYSTEM LOOP	STRETCH TIME	DELAY TIME	NEW CARD
1A	1.8 X 18	2-4-2	+2	-	1	Y	Y	-	-	-	15	-
					6	Y	Y	Y	-	-	3	Y
2A	1.8 X 1.8	5	90	Y	2	Y	Y	-	-	-	-	Y
2B	1.8 X 1.8	5	90	Y	2	Y	Y	-	-	-	-	Y
4A	1.8 X 18	2-4-2	0	-	4	Y	Y	-	-	-	-	-
6A	1.8 X 1.8	4	90	Y	6	Y	Y	-	-	-	-	Y
6B	1.8 X 1.8	4	90	Y	6	Y	Y	-	-	-	-	Y

Prepared in the Office of:

THE LPA GROUP
TRANSPORTATION CONSULTANTS
THE LPA GROUP of North Carolina, p.a.
4904 PROFESSIONAL COURT, SUITE 201
Raleigh, North Carolina 27609

SIGNAL UPGRADE - FINAL DESIGN

Traffic Engineering and Safety Systems Branch
STATE OF NORTH CAROLINA DEPARTMENT OF TRANSPORTATION
Signals and Geometrics Section

SCALE 5 0 10
1:500

N.C. 274 (BESSEMER CITY ROAD) AT I-85 SOUTHBOUND RAMP & LOOP

DIVISION 12 GASTON COUNTY GASTONIA

PLAN DATE: OCT. 30, 2003 REVIEWED BY: R.DUBNICKA, P.E.

PREPARED BY: RGL REVIEWED BY:

REVISIONS	INIT.	DATE

SEAL

NORTH CAROLINA PROFESSIONAL SEAL 027742 ENGINEER ROBERT J. DUBNICKA

SIGNATURE DATE 8-9-04

SIG. INVENTORY NO. 12-0931

09-AUG-2004 12:28
Y:\Traffic\U2408\Signal Plans\SIG-4B.dgn
rdubnicka

PROJECT REFERENCE NO.	SHEET NO.
U-2408	SIG. 31

EDI MODEL 2010ECL CONFLICT MONITOR PROGRAMMING DETAIL

(remove jumpers and set switches as shown)

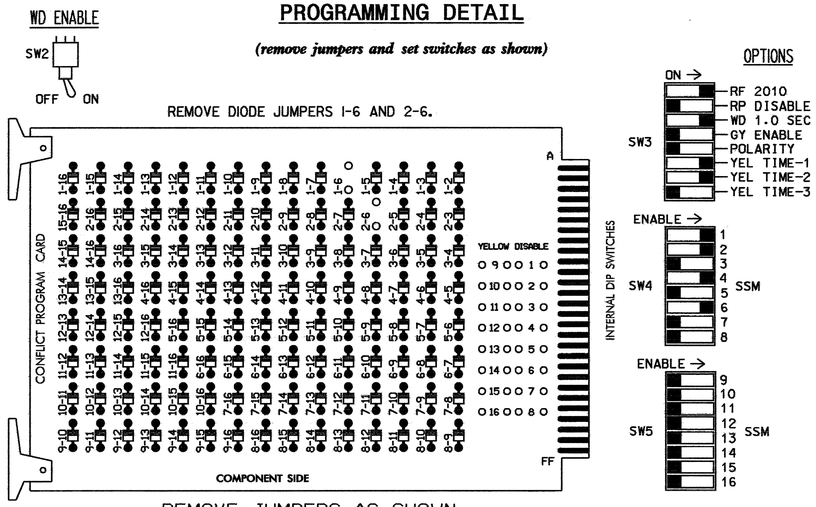

REMOVE JUMPERS AS SHOWN

■ = DENOTES POSITION OF SWITCH

NOTES:

1. CARD IS PROVIDED WITH ALL DIODE JUMPERS IN PLACE. REMOVAL OF ANY JUMPER ALLOWS ITS CHANNELS TO RUN CONCURRENTLY.
2. MAKE SURE JUMPERS SEL1-SEL5 ARE PRESENT ON THE MONITOR BOARD.

NOTES

1. TO PREVENT "FLASH-CONFLICT" PROBLEMS, INSERT RED FLASH PROGRAM BLOCKS FOR ALL UNUSED VEHICLE LOAD SWITCHES IN THE OUTPUT FILE. THE INSTALLER SHALL VERIFY THAT SIGNAL HEADS FLASH IN ACCORDANCE WITH THE SIGNAL PLANS.
2. ENSURE THAT RED ENABLE IS ACTIVE AT ALL TIMES DURING NORMAL OPERATION. TO PREVENT RED FAILURES ON UNUSED MONITOR CHANNELS, TIE UNUSED RED MONITOR INPUTS 3,5,7, 8,9,10,11,12,13,14,15 & 16 TO LOAD SWITCH AC+ PER THE CABINET MANUFACTURER'S INSTRUCTIONS.
3. PROGRAM CONTROLLER TO START UP IN PHASES 2 AND 6 GREEN.
4. ENABLE SIMULTANEOUS GAP-OUT FEATURE, ON CONTROLLER UNIT, FOR ALL PHASES.
5. PROGRAM PHASES 2 AND 6, ON CONTROLLER UNIT, FOR VARIABLE INITIAL AND GAP REDUCTION.
6. THE CABINET AND CONTROLLER ARE PART OF THE GASTONIA CITY SIGNAL SYSTEM.

EQUIPMENT INFORMATION

CONTROLLER.....CONTRACTOR SUPPLIED 2070L
CABINET .....CONTRACTOR SUPPLIED 332
SOFTWARE .....ECONOLITE OASIS
CABINET MOUNT.....BASE
OUTPUT FILE POSITIONS...12
LOAD SWITCHES USED.....S1,S2,S4,S6
PHASES USED.....1,2,4,6
OVERLAPS.....NONE

FIELD CONNECTION HOOK-UP CHART

LOAD SWITCH NO.	S1	S2	S2P	S3	S4	S4P	S5	S6	S6P	S7	S8	S8P
PHASE	1	2	2 PED	3	4	4 PED	5	6	6 PED	7	8	8 PED
SIGNAL HEAD NO.	61	21,22	NU	NU	41,42	NU	NU	61,62	NU	NU	NU	NU
GREEN		130			103			136				
YELLOW		129			102			135				
RED	*	128			101			134				
RED ARROW												
YELLOW ARROW	126											
GREEN ARROW	127											

NU = NOT USED

* DENOTES INSTALL LOAD RESISTOR. SEE LOAD RESISTOR INSTALLATION DETAIL THIS PAGE.

INPUT FILE POSITION LAYOUT

(front view)

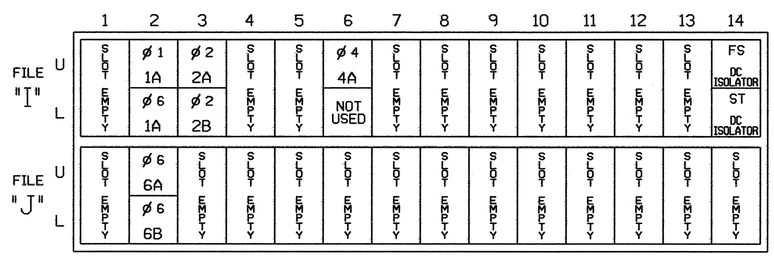

EX.: 1A, 2A, ETC. = LOOP NO.'S

FS = FLASH SENSE
ST = STOP TIME

INPUT FILE CONNECTION & PROGRAMMING CHART

LOOP NO.	LOOP TERMINAL	INPUT FILE POS.	PIN NO.	INPUT ASSIGNMENT NO.	DETECTOR NO.	NEMA PHASE	CALL	EXTEND	FULL TIME DELAY	STRETCH TIME	DELAY TIME
1A[1]	TB2-5,6	I2U	39	1	2	1	Y	Y			15
	TB2-7,8	I2L	43	5	12	6	Y	Y	Y		3
2A	TB2-9,10	I3U	63	25	32	2	Y	Y			
2B	TB2-11,12	I3L	76	38	42	2	Y	Y			
4A	TB4-9,10	I6U	41	3	4	4	Y	Y			
6A	TB3-5,6	J2U	40	2	6	6	Y	Y			
6B	TB3-7,8	J2L	44	6	16	6	Y	Y			

[1] ADD JUMPERS FROM TB2-5 TO TB2-7, AND FROM TB2-6 TO TB2-8.

INPUT FILE POSITION LEGEND: J2L
FILE J
SLOT 2
LOWER

LOAD RESISTOR INSTALLATION DETAIL

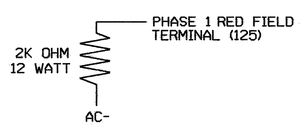

NOTE: THE PURPOSE OF THIS RESISTOR IS TO LOAD THE CHANNEL RED MONITOR INPUT IN ORDER FOR THE SIGNAL SEQUENCE MONITOR TO USE THE FULL SIGNAL SEQUENCE MONITORING CAPABILITY ON CHANNELS THAT DO NOT USE THE RED DISPLAY IN THE FIELD.

THIS ELECTRICAL DETAIL IS FOR
THE SIGNAL DESIGN: 12-0931
DESIGNED: 10/30/03
SEALED: 08/09/04
REVISED:

SIGNAL UPGRADE - FINAL DESIGN

ELECTRICAL AND PROGRAMMING DETAILS FOR:

Prepared in the Offices of:
Traffic Engineering and Safety Systems Branch
STATE OF NORTH CAROLINA DEPARTMENT OF TRANSPORTATION
Signal Management Section
122 N. McDowell St., Raleigh, NC 27603

NC 274 (BESSEMER CITY ROAD)
AT
I-85 SOUTHBOUND RAMP & LOOP

DIVISION 12 GASTON COUNTY GASTONIA

PLAN DATE: JULY 2004 REVIEWED BY: T Joyce
PREPARED BY: WILLIAM HAIRSTON REVIEWED BY:

REVISIONS	INIT.	DATE

SEAL
NORTH CAROLINA PROFESSIONAL SEAL 022013 ENGINEER GEORGE C. BROWN

George C Brown 8/11/04
SIGNATURE DATE

SIG. INVENTORY NO. 12-0931

10-AUG-2004 15:52
S:\Traffic\Mgmt\Joyce\U2408\12031_2004xxxx.dgn
$$$$$$

METRIC	PROJECT REFERENCE NO.	SHEET NO.
	U-2408	SIG. 32

PHASING DIAGRAM

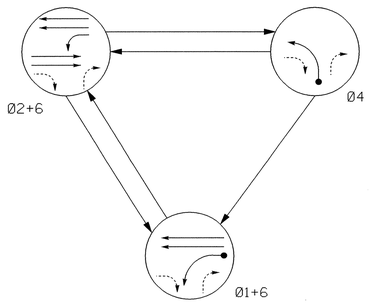

PHASING DIAGRAM DETECTION LEGEND

- DETECTED MOVEMENT
- UNDETECTED MOVEMENT (OVERLAP)
- UNSIGNALIZED MOVEMENT
- PEDESTRIAN MOVEMENT

TABLE OF OPERATION

SIGNAL FACE	PHASE 01+6	PHASE 02+6	PHASE 04	FLASH
21,22	R	G	R	Y
41,42	R	R	G	R
61	G (left arrow)	G	R	Y
62	G	G	R	Y

SIGNAL FACE I.D.

Denotes L.E.D.

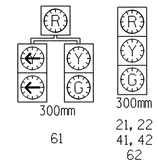

PLAN QUANTITIES

Pay Item	Meters
Signal Cable	140
Messenger Cable	105
Loop Lead-in Cable	80

3 PHASE SEMI ACTUATED ISOLATED

NOTES

1. Refer to "Roadway Standard Drawings NCDOT" dated January 2002 and "Standard Specifications for Roads and Structures" dated January 2002.
2. Set all detector units to presence mode.
3. Do not program for late night flashing operation unless otherwise directed by the engineer.

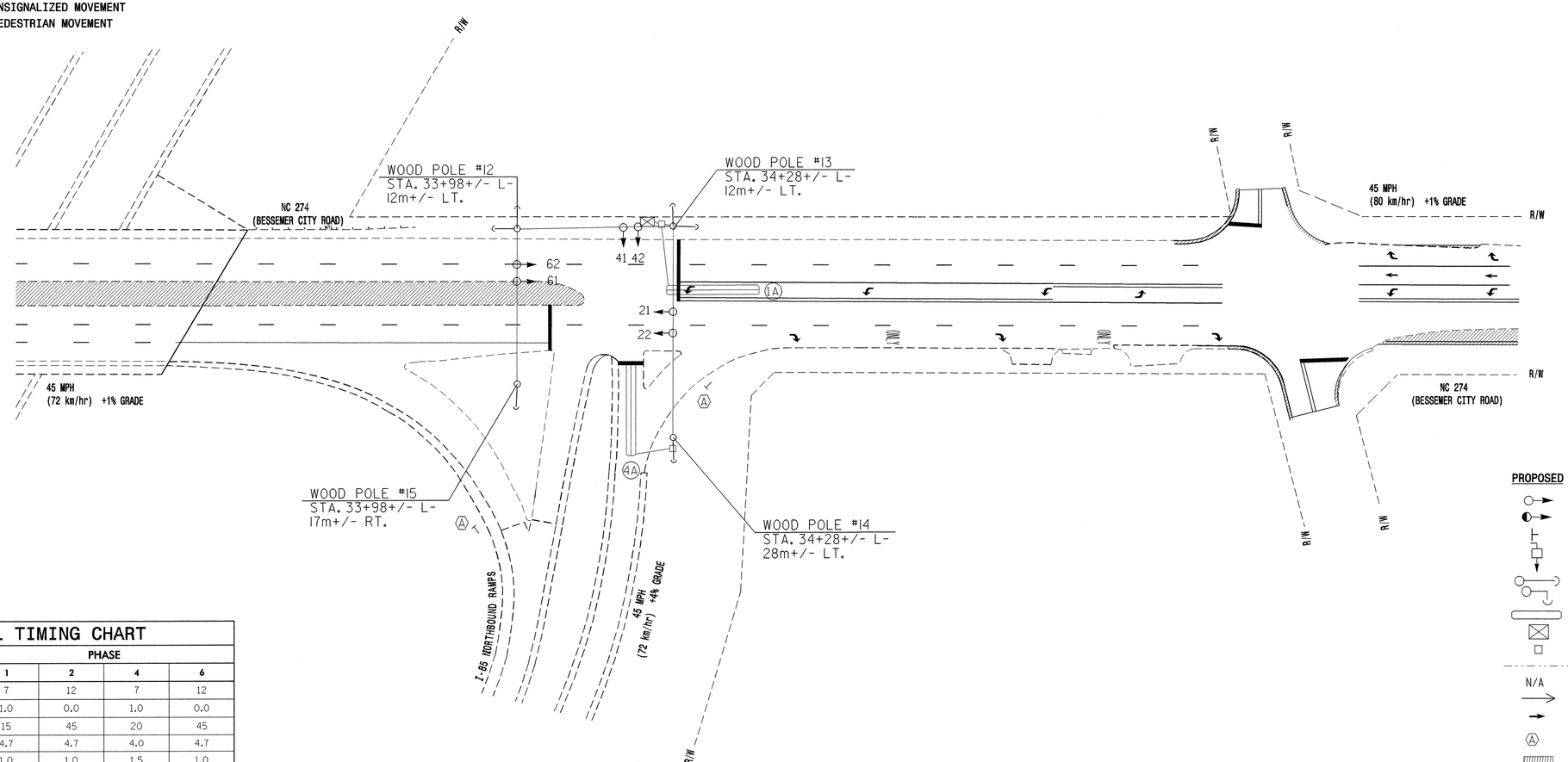

LEGEND

PROPOSED		EXISTING
	Traffic Signal Head	
	Modified Signal Head	N/A
	Sign	
	Pedestrian Signal Head With Push Button & Sign	
	Signal Pole with Guy	
	Signal Pole with Sidewalk Guy	
	Inductive Loop Detector	
	Controller & Cabinet	
	Junction Box	
	50mm Underground Conduit	
N/A	Right of Way with Marker	
	Directional Arrow	
	Pavement Marking Arrow	
	"YIELD" Sign (R1-2)	
	Construction Zone	

2070L TIMING CHART

FEATURE	PHASE 1	PHASE 2	PHASE 4	PHASE 6
Min Green 1 *	7	12	7	12
Extension 1 *	1.0	0.0	1.0	0.0
Max Green 1 *	15	45	20	45
Yellow Clearance	4.7	4.7	4.0	4.7
Red Clearance	1.0	1.0	1.5	1.0
Walk 1 *	-	-	-	-
Don't Walk 1	-	-	-	-
Seconds Per Actuation *	-	-	-	-
Max Variable Initial *	-	-	-	-
Time Before Reduction *	-	-	-	-
Time To Reduce *	-	-	-	-
Minimum Gap	-	-	-	-
Recall Mode	-	MAX RECALL	-	MAX RECALL
Vehicle Call Memory	-	YELLOW	-	YELLOW
Dual Entry	-	-	-	-
Simultaneous Gap	ON	ON	ON	ON

* These values may be field adjusted. Do not adjust Min Green and Extension times for phases 2 and 6 lower than what is shown. Min Green for all other phases should not be lower than 4 seconds.

2070L LOOP & DETECTOR INSTALLATION

INDUCTIVE LOOPS					DETECTOR PROGRAMMING						
LOOP	SIZE (m)	TURNS	DISTANCE FROM STOPBAR (m)	NEW LOOP	PHASE	CALLING	EXTENSION	FULL TIME DELAY	SYSTEM LOOP	STRETCH TIME	DELAY TIME	NEW CARD
1A	1.8 X 18	2-4-2	+2	Y	1	Y	Y	-	-	-	15	Y
4A	1.8 X 18	2-4-2	0	Y	4	Y	Y	-	-	-	10	Y

Prepared in the Office of:

THE LPA GROUP TRANSPORTATION CONSULTANTS
THE LPA GROUP of North Carolina, p.a.
4904 PROFESSIONAL COURT, SUITE 201
Raleigh, North Carolina 27609

SIGNAL UPGRADE - TEMPORARY DESIGN 1

Traffic Engineering and Safety Systems Branch
Signals and Geometrics Section
DEPARTMENT OF TRANSPORTATION
STATE OF NORTH CAROLINA

SCALE 5 0 10 1:500

N.C. 274 (BESSEMER CITY ROAD)
AT
I-85 NORTHBOUND RAMP & LOOP

DIVISION 12 GASTON COUNTY GASTONIA

PLAN DATE: OCT. 30, 2003 REVIEWED BY: R.DUBNICKA, P.E.
PREPARED BY: RGL REVIEWED BY:

REVISIONS	INIT.	DATE

SEAL
NORTH CAROLINA PROFESSIONAL SEAL 027742 ENGINEER ROBERT I. DUBNICKA
SIGNATURE DATE 8-9-04
SIG. INVENTORY NO. 12-0928T1

09-AUG-2004 12:28
Y:\Traffic\U2408\Signal Plans\SIG-5.dgn
rdubnicka

METRIC	PROJECT REFERENCE NO.	SHEET NO.
	U-2408	SIG. 33

PHASING DIAGRAM

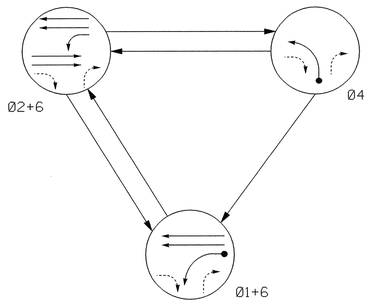

PHASING DIAGRAM DETECTION LEGEND

- DETECTED MOVEMENT
- UNDETECTED MOVEMENT (OVERLAP)
- UNSIGNALIZED MOVEMENT
- PEDESTRIAN MOVEMENT

TABLE OF OPERATION

SIGNAL FACE	PHASE Ø1+6	PHASE Ø2+6	PHASE Ø4	FLASH
21,22	R	G	R	Y
41,42	R	R	G	R
61	G	G	R	Y
62	G	G	R	Y

SIGNAL FACE I.D.

Denotes L.E.D.

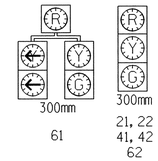

PLAN QUANTITIES

Pay Item	Meters
Signal Cable	0
Messenger Cable	0
Loop Lead-in Cable	0

3 PHASE
SEMI ACTUATED
ISOLATED

NOTES

1. Refer to "Roadway Standard Drawings NCDOT" dated January 2002 and "Standard Specifications for Roads and Structures" dated January 2002.
2. Set all detector units to presence mode.
3. Do not program for late night flashing operation unless otherwise directed by the engineer.

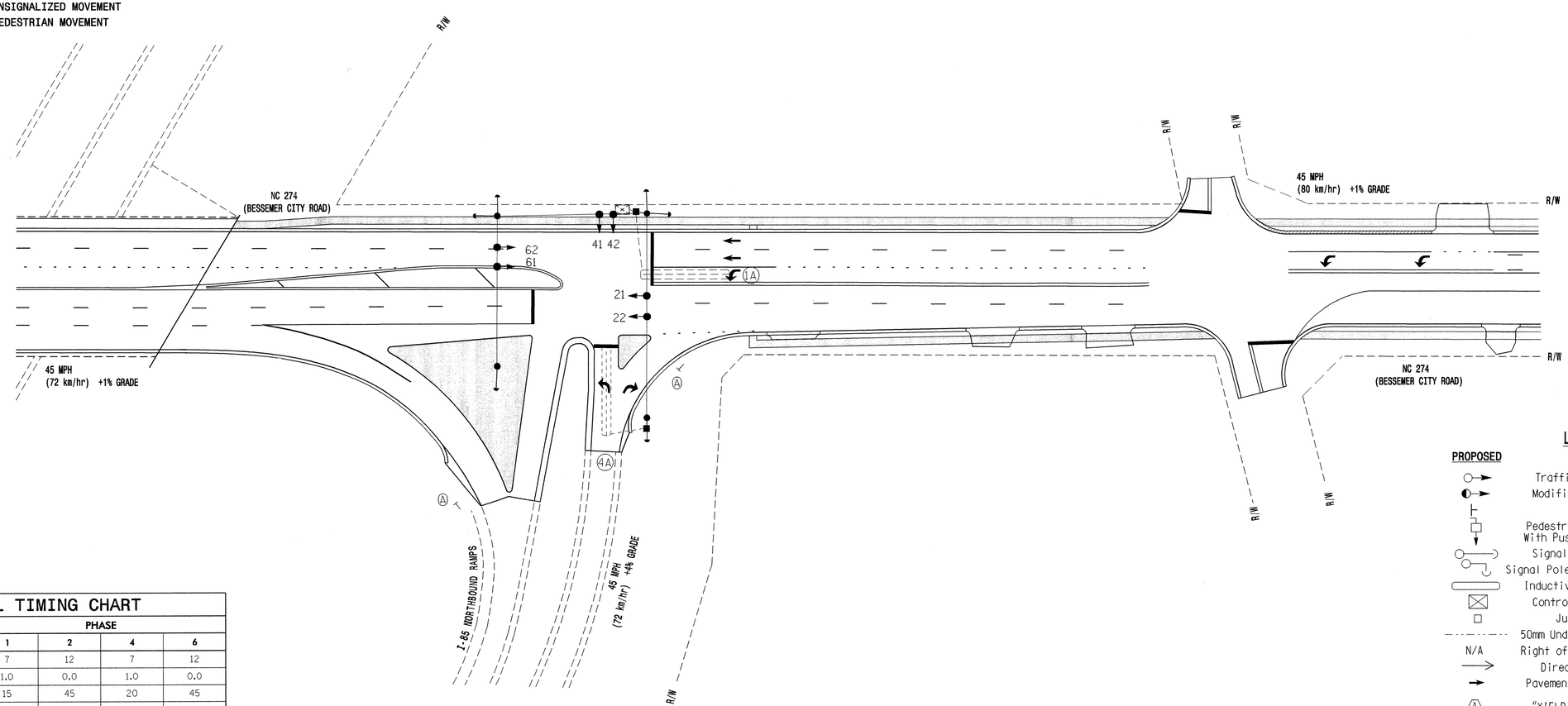

LEGEND

PROPOSED		EXISTING
	Traffic Signal Head	
	Modified Signal Head	N/A
	Sign	
	Pedestrian Signal Head With Push Button & Sign	
	Signal Pole with Guy	
	Signal Pole with Sidewalk Guy	
	Inductive Loop Detector	
	Controller & Cabinet	
	Junction Box	
	50mm Underground Conduit	
N/A	Right of Way with Marker	
	Directional Arrow	
	Pavement Marking Arrow	
	"YIELD" Sign (R1-2)	

2070L TIMING CHART

FEATURE	PHASE 1	PHASE 2	PHASE 4	PHASE 6
Min Green 1 *	7	12	7	12
Extension 1 *	1.0	0.0	1.0	0.0
Max Green 1 *	15	45	20	45
Yellow Clearance	4.7	4.7	4.0	4.7
Red Clearance	1.0	1.0	1.5	1.0
Walk 1 *	-	-	-	-
Don't Walk 1	-	-	-	-
Seconds Per Actuation *	-	-	-	-
Max Variable Initial *	-	-	-	-
Time Before Reduction *	-	-	-	-
Time To Reduce *	-	-	-	-
Minimum Gap	-	-	-	-
Recall Mode	-	MAX RECALL	-	MAX RECALL
Vehicle Call Memory	-	YELLOW	-	YELLOW
Dual Entry	-	-	-	-
Simultaneous Gap	ON	ON	ON	ON

* These values may be field adjusted. Do not adjust Min Green and Extension times for phases 2 and 6 lower than what is shown. Min Green for all other phases should not be lower than 4 seconds.

2070L LOOP & DETECTOR INSTALLATION

INDUCTIVE LOOPS					DETECTOR PROGRAMMING							
LOOP	SIZE (m)	TURNS	DISTANCE FROM STOPBAR (m)	NEW LOOP	PHASE	CALLING	EXTENSION	FULL TIME DELAY	SYSTEM LOOP	STRETCH TIME	DELAY TIME	NEW CARD
1A	1.8 X 18	2-4-2	+2	-	1	Y	Y	-	-	-	15	-
4A	1.8 X 18	2-4-2	0	-	4	Y	Y	-	-	-	10	-

Prepared in the Office of:

THE LPA GROUP TRANSPORTATION CONSULTANTS

THE LPA GROUP of North Carolina, p.a.
4904 PROFESSIONAL COURT, SUITE 201
Raleigh, North Carolina 27609

SIGNAL UPGRADE - TEMPORARY DESIGN 2

Traffic Engineering and Safety Systems Branch
Signals and Geometrics Section
NORTH CAROLINA DEPARTMENT OF TRANSPORTATION

N.C. 274 (BESSEMER CITY ROAD)
AT
I-85 NORTHBOUND RAMP & LOOP

DIVISION 12 GASTON COUNTY GASTONIA

PLAN DATE: OCT. 30,2003 REVIEWED BY: R.DUBNICKA,P.E.

PREPARED BY: RGL REVIEWED BY:

SCALE 5 0 10 1:500

REVISIONS	INIT.	DATE

SEAL
NORTH CAROLINA PROFESSIONAL SEAL 027742 ENGINEER ROBERT J. DUBNICKA

SIGNATURE Robert J. Dubnicka DATE 5-9-04

SIG. INVENTORY NO. 12-0928T2

09-AUG-2004 12:27
Y:\Traffic\U2408\Signal Plans\SIG-5A.dgn
rdubnicka

PROJECT REFERENCE NO.	SHEET NO.
U-2408	SIG. 34

EDI MODEL 2010ECL CONFLICT MONITOR PROGRAMMING DETAIL

(remove jumpers and set switches as shown)

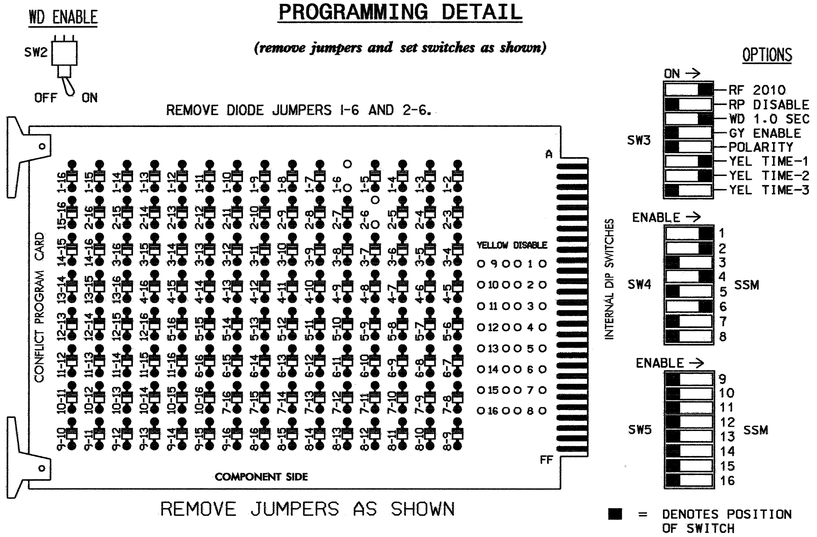

REMOVE JUMPERS AS SHOWN

■ = DENOTES POSITION OF SWITCH

NOTES:

1. CARD IS PROVIDED WITH ALL DIODE JUMPERS IN PLACE. REMOVAL OF ANY JUMPER ALLOWS ITS CHANNELS TO RUN CONCURRENTLY.
2. MAKE SURE JUMPERS SEL1-SEL5 ARE PRESENT ON THE MONITOR BOARD.

NOTES

1. TO PREVENT "FLASH-CONFLICT" PROBLEMS, INSERT RED FLASH PROGRAM BLOCKS FOR ALL UNUSED VEHICLE LOAD SWITCHES IN THE OUTPUT FILE. THE INSTALLER SHALL VERIFY THAT SIGNAL HEADS FLASH IN ACCORDANCE WITH THE SIGNAL PLANS.
2. ENSURE THAT RED ENABLE IS ACTIVE AT ALL TIMES DURING NORMAL OPERATION. TO PREVENT RED FAILURES ON UNUSED MONITOR CHANNELS, TIE UNUSED RED MONITOR INPUTS 3,5,7, 8,9,10,11,12,13,14,15 & 16 TO LOAD SWITCH AC+ PER THE CABINET MANUFACTURER'S INSTRUCTIONS.
3. PROGRAM CONTROLLER TO START UP IN PHASES 2 AND 6 GREEN.
4. ENABLE SIMULTANEOUS GAP-OUT FEATURE, ON CONTROLLER UNIT, FOR ALL PHASES.

EQUIPMENT INFORMATION

CONTROLLER.....CONTRACTOR SUPPLIED 2070L
CABINET .....CONTRACTOR SUPPLIED 332
SOFTWARE .....ECONOLITE OASIS
CABINET MOUNT.....BASE
OUTPUT FILE POSITIONS...12
LOAD SWITCHES USED.....S1,S2,S4,S6
PHASES USED.....1,2,4,6
OVERLAPS.....NONE

FIELD CONNECTION HOOK-UP CHART

LOAD SWITCH NO.	S1	S2	S2P	S3	S4	S4P	S5	S6	S6P	S7	S8	S8P
PHASE	1	2	2 PED	3	4	4 PED	5	6	6 PED	7	8	8 PED
SIGNAL HEAD NO.	61	21,22	NU	NU	41,42	NU	NU	61,62	NU	NU	NU	NU
GREEN		130			103			136				
YELLOW		129			102			135				
RED	*	128			101			134				
RED ARROW												
YELLOW ARROW	126											
GREEN ARROW	127											

NU = NOT USED

* DENOTES INSTALL LOAD RESISTOR. SEE LOAD RESISTOR INSTALLATION DETAIL THIS PAGE.

INPUT FILE POSITION LAYOUT

(front view)

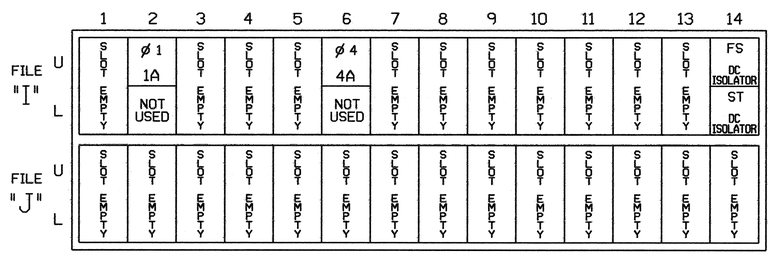

EX.: 1A, 2A, ETC. = LOOP NO.'S

FS = FLASH SENSE
ST = STOP TIME

INPUT FILE CONNECTION & PROGRAMMING CHART

LOOP NO.	LOOP TERMINAL	INPUT FILE POS.	PIN NO.	INPUT ASSIGNMENT NO.	DETECTOR NO.	NEMA PHASE	CALL	EXTEND	FULL TIME DELAY	STRETCH TIME	DELAY TIME
1A	TB2-5,6	I2U	39	1	2	1	Y	Y			15
4A	TB4-9,10	I6U	41	3	4	4	Y	Y			10

INPUT FILE POSITION LEGEND: J2L
FILE J
SLOT 2
LOWER

THIS ELECTRICAL DETAIL IS FOR
THE SIGNAL DESIGN: 12-0928T1,T2
DESIGNED: 10/30/03
SEALED: 08/09/04
REVISED:

LOAD RESISTOR INSTALLATION DETAIL

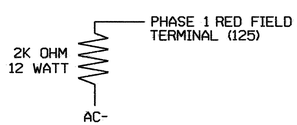

NOTE: THE PURPOSE OF THIS RESISTOR IS TO LOAD THE CHANNEL RED MONITOR INPUT IN ORDER FOR THE SIGNAL SEQUENCE MONITOR TO USE THE FULL SIGNAL SEQUENCE MONITORING CAPABILITY ON CHANNELS THAT DO NOT USE THE RED DISPLAY IN THE FIELD.

SIGNAL UPGRADE - TEMPORARY DESIGN 1,2

ELECTRICAL AND PROGRAMMING DETAILS FOR:

Prepared in the Offices of:
Traffic Engineering and Safety Systems Branch
Signals Management Section
122 N. McDowell St., Raleigh, NC 27603

NC 274 (BESSEMER CITY ROAD)
AT
I-85 NORTHBOUND RAMP & LOOP

DIVISION 12 GASTON COUNTY GASTONIA
PLAN DATE: JULY 2004 REVIEWED BY: T Joyce
PREPARED BY: WILLIAM HAIRSTON REVIEWED BY:

REVISIONS	INIT.	DATE

SEAL
NORTH CAROLINA PROFESSIONAL SEAL 022013 ENGINEER GEORGE C. BROWN
George C. Brown 8/11/04
SIGNATURE DATE
SIG. INVENTORY NO. 12-0928T1,T2

10-AUG-2004 15:54
S:\sig\pgm\wtJoyce\U2408\20928_2004xxxxs.dgn
J:\0928

METRIC	PROJECT REFERENCE NO.	SHEET NO.
	U-2408	SIG. 35

3 PHASE
FULLY ACTUATED
GASTONIA CITY SIGNAL SYSTEM

PHASING DIAGRAM

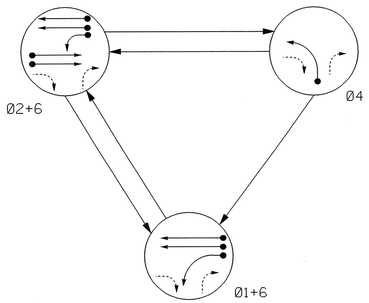

PHASING DIAGRAM DETECTION LEGEND

- DETECTED MOVEMENT
- UNDETECTED MOVEMENT (OVERLAP)
- UNSIGNALIZED MOVEMENT
- PEDESTRIAN MOVEMENT

TABLE OF OPERATION

SIGNAL FACE	PHASE 01+6	PHASE 02+6	PHASE 04	FLASH
21,22	R	G	R	Y
41,42	R	R	G	R
61	G	G	R	Y
62	G	G	R	Y

SIGNAL FACE I.D.

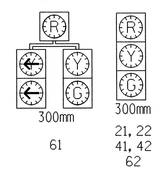

PLAN QUANTITIES

Pay Item	Meters
Signal Cable	90
Messenger Cable	0
Loop Lead-in Cable	400

NOTES

1. Refer to "Roadway Standard Drawings NCDOT" dated January 2002 and "Standard Specifications for Roads and Structures" dated January 2002.
2. Set all detector units to presence mode.
3. Maximum times shown in timing chart are for free run operation only. Coordinated signal system timing values shall supersede these values.
4. System data: Controller Asset #: 0928
5. During coordination, Phase 1 may be lagged.
6. Do not program for late night flashing operation unless otherwise directed by the engineer.

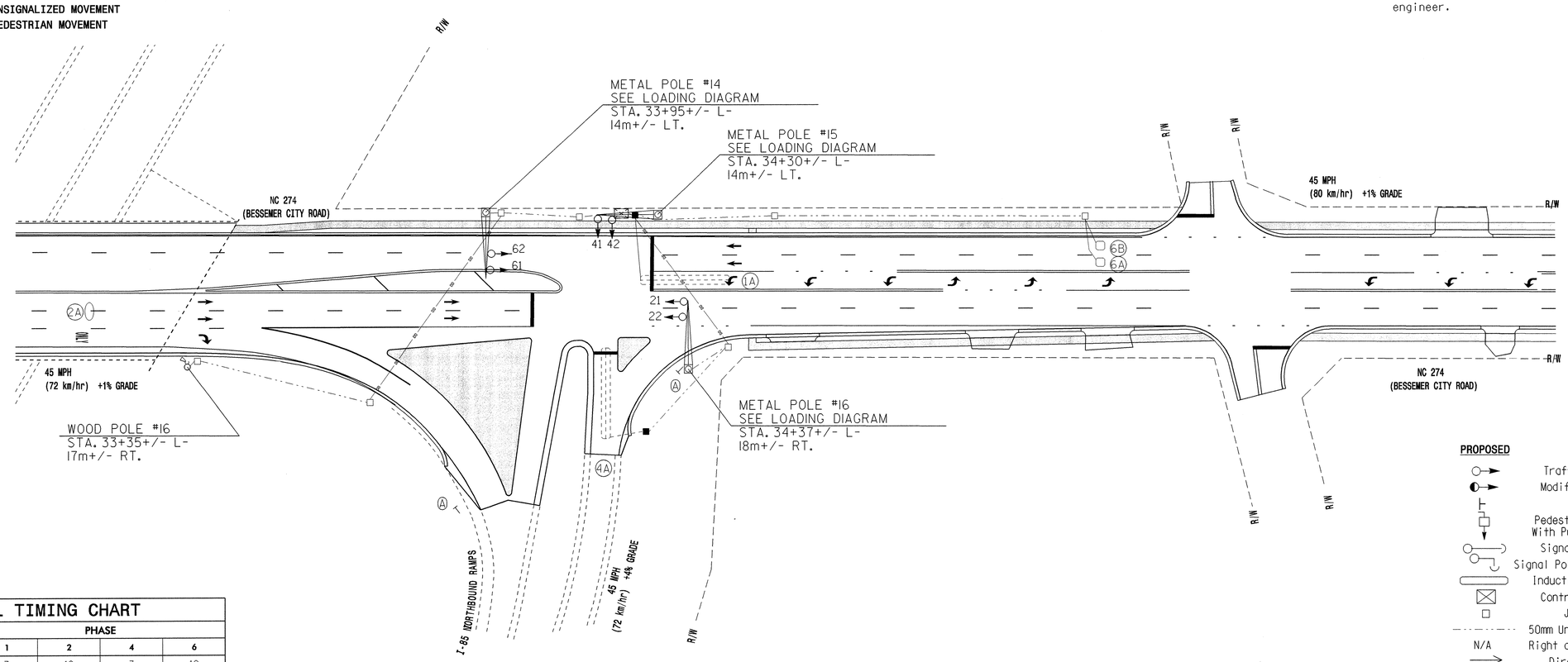

LEGEND

PROPOSED		EXISTING
	Traffic Signal Head	
	Modified Signal Head	N/A
	Sign	
	Pedestrian Signal Head With Push Button & Sign	
	Signal Pole with Guy	
	Signal Pole with Sidewalk Guy	
	Inductive Loop Detector	
	Controller & Cabinet	
	Junction Box	
	50mm Underground Conduit	
N/A	Right of Way with Marker	
	Directional Arrow	
	Pavement Marking Arrow	
	Metal Pole with Mast Arm	
	Microwave Detection Area	
	"YIELD" Sign (R1-2)	
	Directional Drill 2 - 50mm Polyethylene Conduit	N/A

2070L TIMING CHART

FEATURE	PHASE 1	PHASE 2	PHASE 4	PHASE 6
Min Green 1 *	7	12	7	12
Extension 1 *	1.0	6.0	1.0	6.0
Max Green 1 *	15	90	20	90
Yellow Clearance	4.7	4.7	4.0	4.7
Red Clearance	1.0	1.0	1.5	1.0
Walk 1 *	-	-	-	-
Don't Walk 1	-	-	-	-
Seconds Per Actuation *	-	1.8	-	1.8
Max Variable Initial *	-	34	-	34
Time Before Reduction *	-	15	-	15
Time To Reduce *	-	30	-	30
Minimum Gap	-	3.0	-	3.0
Recall Mode	-	MIN RECALL	-	MIN RECALL
Vehicle Call Memory	-	YELLOW	-	YELLOW
Dual Entry	-	-	-	-
Simultaneous Gap	ON	ON	ON	ON

* These values may be field adjusted. Do not adjust Min Green and Extension times for phases 2 and 6 lower than what is shown. Min Green for all other phases should not be lower than 4 seconds.

2070L LOOP & DETECTOR INSTALLATION

INDUCTIVE LOOPS					DETECTOR PROGRAMMING							
LOOP	SIZE (m)	TURNS	DISTANCE FROM STOPBAR (m)	NEW LOOP	PHASE	CALLING	EXTENSION	FULL TIME DELAY	SYSTEM LOOP	STRETCH TIME	DELAY TIME	NEW CARD
1A	1.8 X 18	2-4-2	+2	-	1	Y	Y	-	-	-	15	-
					6	Y	Y	Y	-	-	3	Y
2A*	*	*	90	*	2	Y	Y	-	-	-	-	Y
4A	1.8 X 18	2-4-2	0	-	4	Y	Y	-	-	-	10	-
6A,6B	1.8 X 1.8	4	90	Y	6	Y	Y	-	-	-	-	Y

* MICROWAVE

Prepared In the Office of:

THE LPA GROUP
TRANSPORTATION CONSULTANTS
THE LPA GROUP of North Carolina, p.a.
4904 PROFESSIONAL COURT, SUITE 201
Raleigh, North Carolina 27609

SIGNAL UPGRADE - FINAL DESIGN

Traffic Engineering and Safety Systems Branch
STATE OF NORTH CAROLINA DEPARTMENT OF TRANSPORTATION
Signals and Geometrics Section

N.C. 274 (BESSEMER CITY ROAD)
AT
I-85 NORTHBOUND RAMP & LOOP

DIVISION 12 GASTON COUNTY GASTONIA

PLAN DATE:	OCT. 30, 2003	REVIEWED BY:	R.DUBNICKA,P.E.
PREPARED BY:	RGL	REVIEWED BY:	

SCALE 1:500 (5 0 10)

REVISIONS	INIT.	DATE

SEAL
NORTH CAROLINA PROFESSIONAL SEAL 027742 ENGINEER ROBERT J. DUBNICKA

Robert J. Dubnicka 8-9-04
SIGNATURE DATE

SIG. INVENTORY NO. 12-0928

09-AUG-2004 12:27
Y:\Traffic\U2408\Signal Plans\SIG-5B.dgn
rdubnicka

PROJECT REFERENCE NO.	SHEET NO.
U-2408	SIG. 36

EDI MODEL 2010ECL CONFLICT MONITOR PROGRAMMING DETAIL

(remove jumpers and set switches as shown)

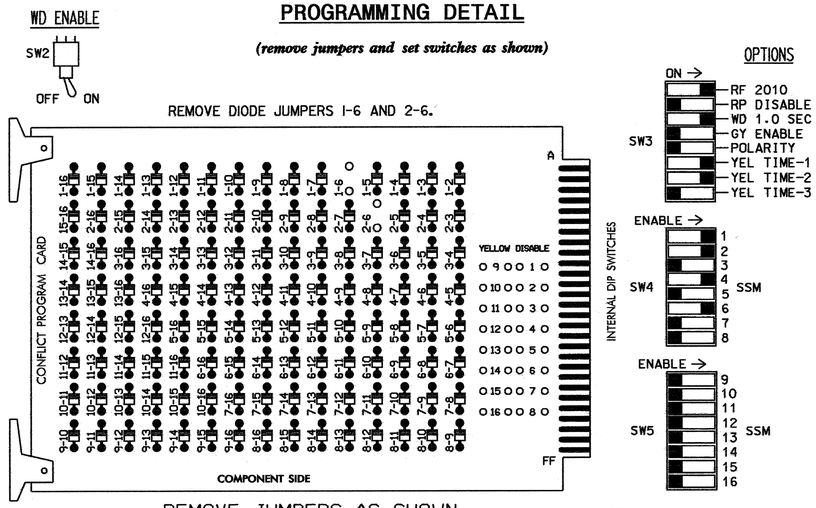

REMOVE JUMPERS AS SHOWN

■ = DENOTES POSITION OF SWITCH

NOTES:

1. CARD IS PROVIDED WITH ALL DIODE JUMPERS IN PLACE. REMOVAL OF ANY JUMPER ALLOWS ITS CHANNELS TO RUN CONCURRENTLY.
2. MAKE SURE JUMPERS SEL1-SEL5 ARE PRESENT ON THE MONITOR BOARD.

NOTES

1. TO PREVENT "FLASH-CONFLICT" PROBLEMS, INSERT RED FLASH PROGRAM BLOCKS FOR ALL UNUSED VEHICLE LOAD SWITCHES IN THE OUTPUT FILE. THE INSTALLER SHALL VERIFY THAT SIGNAL HEADS FLASH IN ACCORDANCE WITH THE SIGNAL PLANS.
2. ENSURE THAT RED ENABLE IS ACTIVE AT ALL TIMES DURING NORMAL OPERATION. TO PREVENT RED FAILURES ON UNUSED MONITOR CHANNELS, TIE UNUSED RED MONITOR INPUTS 3,5,7, 8,9,10,11,12,13,14,15 & 16 TO LOAD SWITCH AC+ PER THE CABINET MANUFACTURER'S INSTRUCTIONS.
3. PROGRAM CONTROLLER TO START UP IN PHASES 2 AND 6 GREEN.
4. ENABLE SIMULTANEOUS GAP-OUT FEATURE, ON CONTROLLER UNIT, FOR ALL PHASES.
5. PROGRAM PHASES 2 AND 6, ON CONTROLLER UNIT, FOR VARIABLE INITIAL AND GAP REDUCTION.
6. THE CABINET AND CONTROLLER ARE PART OF THE GASTONIA CITY SIGNAL SYSTEM.
9. IF AN APPROVED EQUIVALENT OF TC-26B MICROWAVE DETECTOR IS USED, DISREGARD MICROWAVE DETECTOR WIRING DETAIL SHOWN BELOW. INSTALL ACCORDING TO MANUFACTURER'S INSTRUCTIONS. SENSOR SHALL BE WIRED SUCH THAT INPUT INTERFACE TO THE CONTROLLER IS ACHEIVED THROUGH ISOLATION CIRCUITY.

FIELD CONNECTION HOOK-UP CHART

LOAD SWITCH NO.	S1	S2	S2P	S3	S4	S4P	S5	S6	S6P	S7	S8	S8P
PHASE	1	2	2 PED	3	4	4 PED	5	6	6 PED	7	8	8 PED
SIGNAL HEAD NO.	61	21,22	NU	NU	41,42	NU	NU	61,62	NU	NU	NU	NU
GREEN		130			103			136				
YELLOW		129			102			135				
RED	*	128			101			134				
RED ARROW												
YELLOW ARROW	126											
GREEN ARROW	127											

NU = NOT USED

* DENOTES INSTALL LOAD RESISTOR. SEE LOAD RESISTOR INSTALLATION DETAIL THIS PAGE.

EQUIPMENT INFORMATION

CONTROLLER.....CONTRACTOR SUPPLIED 2070L
CABINET .....CONTRACTOR SUPPLIED 332
SOFTWARE .....ECONOLITE OASIS
CABINET MOUNT.....BASE
OUTPUT FILE POSITIONS...12
LOAD SWITCHES USED.....S1,S2,S4,S6
PHASES USED.....1,2,4,6
OVERLAPS.....NONE

MICROWAVE DETECTOR WIRING DETAIL

(wire as shown)

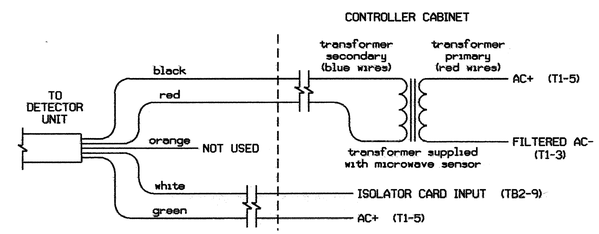

TC26B WIRE LIST

COLOR	FUNCTION
black	12V to 24V AC/DC (no polarity)
red	12V to 24V AC/DC (no polarity)
orange	Output Relay Normally Open
white	Output Relay Normally Closed
green	Output Relay Normally Common

NOTES:

1. SENSOR IS A MICROWAVE SENSORS, INC. MODEL TC-26B MICROWAVE MOTION DETECTOR MOUNTED ON POLES AS INDICATED ON SIGNAL DESIGN PLANS.
2. CONFIGURE AC ISOLATOR CARD TO PLACE CALL UPON REMOVAL OF AC+ FROM THE INPUT.
3. IMPORTANT: FOR PROPER OPERATION OF THE MICROWAVE DETECTOR, REMOVE SURGE PROTECTION FROM TB2-9 AND TB2-10. TIE TB2-10 TO AC NEUTRAL.

INPUT FILE POSITION LAYOUT

(front view)

		1	2	3	4	5	6	7	8	9	10	11	12	13	14
FILE "I"	U	SLOT EMPTY	ø 1 1A	ø 2 2A AC ISOLATOR	SLOT EMPTY	SLOT EMPTY	ø 4 4A	SLOT EMPTY	SLOT EMPTY	SLOT EMPTY	SLOT EMPTY	SLOT EMPTY	SLOT EMPTY	SLOT EMPTY	FS DC ISOLATOR
	L		ø 6 1A	NOT USED			NOT USED								ST DC ISOLATOR
FILE "J"	U	SLOT EMPTY	ø 6 6A,6B	SLOT EMPTY	SLOT EMPTY	SLOT EMPTY	SLOT EMPTY	SLOT EMPTY	SLOT EMPTY	SLOT EMPTY	SLOT EMPTY	SLOT EMPTY	SLOT EMPTY	SLOT EMPTY	SLOT EMPTY
	L			NOT USED											

EX.: 1A, 2A, ETC. = LOOP NO.'S

FS = FLASH SENSE
ST = STOP TIME

INPUT FILE CONNECTION & PROGRAMMING CHART

LOOP NO.	LOOP TERMINAL	INPUT FILE POS.	PIN NO.	INPUT ASSIGNMENT NO.	DETECTOR NO.	NEMA PHASE	CALL	EXTEND	FULL TIME DELAY	STRETCH TIME	DELAY TIME
1A[1]	TB2-5,6	I2U	39	1	2	1	Y	Y			15
	TB2-7,8	I2L	43	5	12	6	Y	Y	Y		3
* 2A	-	I3U	63	25	32	2	Y	Y			
4A	TB4-9,10	I6U	41	3	4	4	Y	Y			10
6A,6B	TB3-5,6	J2U	40	2	6	6	Y	Y			

[1] ADD JUMPERS FROM TB2-5 TO TB2-7, AND FROM TB2-6 TO TB2-8.

* MICROWAVE DETECTOR. SEE WIRING DETAIL THIS PAGE.

INPUT FILE POSITION LEGEND: J2L
FILE J
SLOT 2
LOWER

LOAD RESISTOR INSTALLATION DETAIL

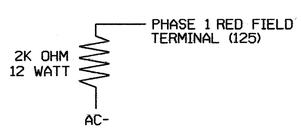

NOTE: THE PURPOSE OF THIS RESISTOR IS TO LOAD THE CHANNEL RED MONITOR INPUT IN ORDER FOR THE SIGNAL SEQUENCE MONITOR TO USE THE FULL SIGNAL SEQUENCE MONITORING CAPABILITY ON CHANNELS THAT DO NOT USE THE RED DISPLAY IN THE FIELD.

THIS ELECTRICAL DETAIL IS FOR
THE SIGNAL DESIGN: 12-0928
DESIGNED: 10/30/03
SEALED: 08/09/04
REVISED:

SIGNAL UPGRADE - FINAL DESIGN

ELECTRICAL AND PROGRAMMING DETAILS FOR:

NC 274 (BESSEMER CITY ROAD) AT I-85 NORTHBOUND RAMP & LOOP

DIVISION 12 GASTON COUNTY GASTONIA

PLAN DATE: JULY 2004 REVIEWED BY: T Vaga

PREPARED BY: WILLIAM HAIRSTON REVIEWED BY:

REVISIONS	INIT.	DATE

Prepared in the Offices of: Traffic Engineering and Safety Systems Branch, Division of Highways, Department of Transportation, Raleigh, North Carolina
122 N. McDowell St., Raleigh, NC 27603

SEAL
NORTH CAROLINA PROFESSIONAL SEAL 022013 ENGINEER GEORGE C. BROWN

George C. Brown 8/16/04
SIGNATURE DATE

SIG. INVENTORY NO. 12-0928

10-AUG-2004 15:56
S:\MGMT\Joyce\U2408\20928_2004xxxxb.dgn
jjoyce

METRIC	PROJECT REFERENCE NO.	SHEET NO.
	U-2408	SIG. 37

PHASING DIAGRAM

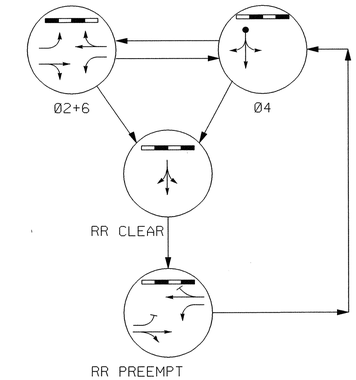

PHASING DIAGRAM DETECTION LEGEND

- DETECTED MOVEMENT
- UNDETECTED MOVEMENT (OVERLAP)
- UNSIGNALIZED MOVEMENT
- PEDESTRIAN MOVEMENT

TABLE OF OPERATION

SIGNAL FACE	PHASE Ø2+6	PHASE Ø4	PHASE RR CLEAR	PHASE RR PREEMPT	PHASE FLASH
21,22	G	R	R	G	Y
41,42	R	G	G	R	R
61,62	G	R	R	G	Y

SIGNAL FACE I.D.

Denotes L.E.D.

300mm

21, 22
41, 42
61, 62

PLAN QUANTITIES

Pay Item	Meters
Signal Cable	250
Messenger Cable	85
Loop Lead-in Cable	10

2 PHASE SEMI ACTUATED RAILROAD PREEMPTION ISOLATED

NOTES

1. Refer to "Roadway Standard Drawings NCDOT" dated January 2002 and "Standard Specifications for Roads and Structures" dated January 2002.
2. Set all detector units to presence mode.
3. This location contains railroad preemption phasing. Do not program signal for late night flashing operation.

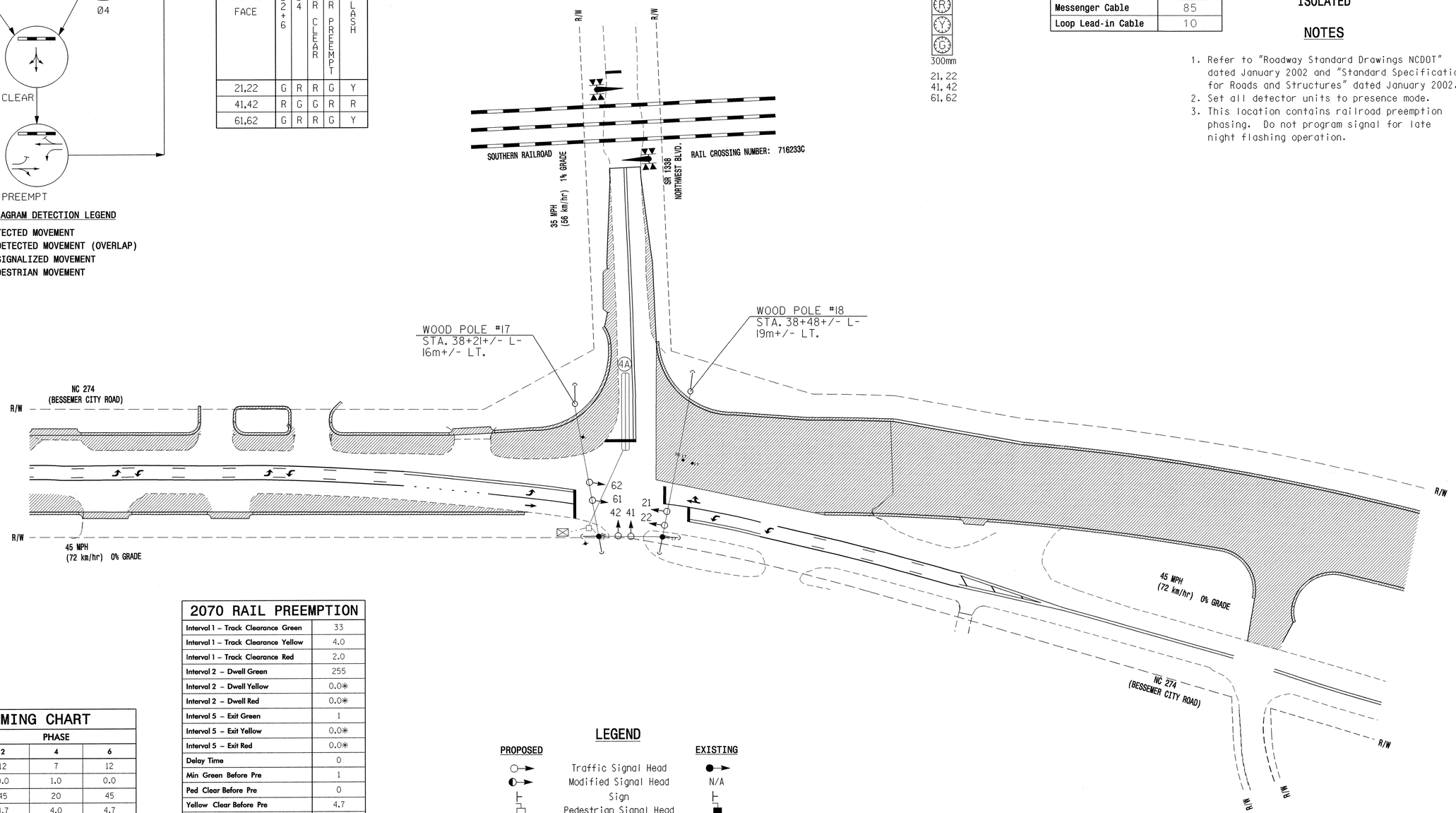

2070 RAIL PREEMPTION

Interval 1 – Track Clearance Green	33
Interval 1 – Track Clearance Yellow	4.0
Interval 1 – Track Clearance Red	2.0
Interval 2 – Dwell Green	255
Interval 2 – Dwell Yellow	0.0*
Interval 2 – Dwell Red	0.0*
Interval 5 – Exit Green	1
Interval 5 – Exit Yellow	0.0*
Interval 5 – Exit Red	0.0*
Delay Time	0
Min Green Before Pre	1
Ped Clear Before Pre	0
Yellow Clear Before Pre	4.7
Red Clear Before Pre	2.0
Dwell Min Time	10
Ped Clear Through Yellow	N

* Clearance time defaults to time used for phase during normal operation.

2070L TIMING CHART

FEATURE	PHASE 2	PHASE 4	PHASE 6
Min Green 1 *	12	7	12
Extension 1 *	0.0	1.0	0.0
Max Green 1 *	45	20	45
Yellow Clearance	4.7	4.0	4.7
Red Clearance	1.0	2.0	1.0
Walk 1 *	-	-	-
Don't Walk 1	-	-	-
Seconds Per Actuation *	-	-	-
Max Variable Initial *	-	-	-
Time Before Reduction *	-	-	-
Time To Reduce *	-	-	-
Minimum Gap	-	-	-
Recall Mode	MAX RECALL	-	MAX RECALL
Vehicle Call Memory	YELLOW	-	YELLOW
Dual Entry	-	-	-
Simultaneous Gap	ON	ON	ON

* These values may be field adjusted. Do not adjust Min Green and Extension times for phases 2 and 6 lower than what is shown. Min Green for all other phases should not be lower than 4 seconds.

2070L LOOP & DETECTOR INSTALLATION

INDUCTIVE LOOPS					DETECTOR PROGRAMMING						
LOOP	SIZE (m)	TURNS	DISTANCE FROM STOPBAR (m)	NEW LOOP	PHASE	CALLING	EXTENSION	FULL TIME DELAY	SYSTEM LOOP	STRETCH TIME	DELAY TIME	NEW CARD
4A	1.8 X 18	2-4-2	+2	Y	4	Y	Y	-	-	-	10	Y

LEGEND

PROPOSED		EXISTING
	Traffic Signal Head	
	Modified Signal Head	N/A
	Sign	
	Pedestrian Signal Head With Push Button & Sign	
	Signal Pole with Guy	
	Signal Pole with Sidewalk Guy	
	Inductive Loop Detector	
	Controller & Cabinet	
	Junction Box	
	50mm Underground Conduit	
N/A	Right of Way with Marker	
	Directional Arrow	
	Pavement Marking Arrow	
N/A	Railroad Gate and Flasher	
N/A	Railroad Tracks	
	Construction Zone	

Prepared in the Office of:

THE LPA GROUP TRANSPORTATION CONSULTANTS

THE LPA GROUP of North Carolina, p.a.
4904 PROFESSIONAL COURT, SUITE 201
Raleigh, North Carolina 27609

SIGNAL UPGRADE - TEMPORARY DESIGN 1

Traffic Engineering and Safety Systems Branch
Signals and Geometrics Section

SCALE 1:500

N.C. 274 (BESSEMER CITY ROAD) AT SR1338 (NORTHWEST BLVD.)

DIVISION 12 GASTON COUNTY GASTONIA

PLAN DATE: OCT. 30,2003 REVIEWED BY: R.DUBNICKA,P.E.

PREPARED BY: RGL REVIEWED BY:

REVISIONS	INIT.	DATE

SEAL

NORTH CAROLINA PROFESSIONAL SEAL 027742 ENGINEER ROBERT J. DUBNICKA

SIGNATURE DATE 8-9-04

SIG. INVENTORY NO. 12-0155T1

09-AUG-2004 12:22
T:\Traffic\Projects\U2408\Signal Plans\Sig-6.dgn
rdubnicka

PROJECT REFERENCE NO.	SHEET NO.
U-2408	SIG.38

EDI MODEL 2010ECL CONFLICT MONITOR PROGRAMMING DETAIL

(remove jumper and set switches as shown)

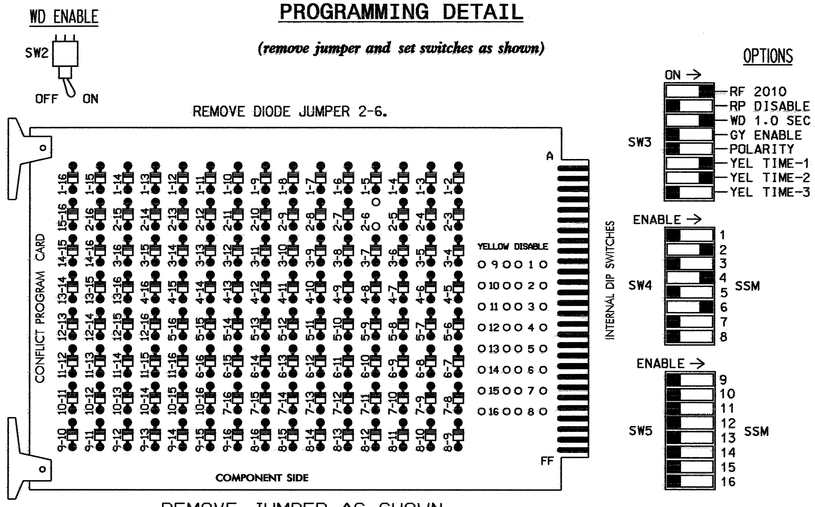

REMOVE JUMPER AS SHOWN

■ = DENOTES POSITION OF SWITCH

NOTES:

1. CARD IS PROVIDED WITH ALL DIODE JUMPERS IN PLACE. REMOVAL OF ANY JUMPER ALLOWS ITS CHANNELS TO RUN CONCURRENTLY.
2. MAKE SURE JUMPERS SEL1-SEL5 ARE PRESENT ON THE MONITOR BOARD.

NOTES

1. TO PREVENT "FLASH-CONFLICT" PROBLEMS, INSERT RED FLASH PROGRAM BLOCKS FOR ALL UNUSED VEHICLE LOAD SWITCHES IN THE OUTPUT FILE. THE INSTALLER SHALL VERIFY THAT SIGNAL HEADS FLASH IN ACCORDANCE WITH THE SIGNAL PLANS.
2. ENSURE THAT RED ENABLE IS ACTIVE AT ALL TIMES DURING NORMAL OPERATION. TO PREVENT RED FAILURES ON UNUSED MONITOR CHANNELS, TIE UNUSED RED MONITOR INPUTS 1,3,5, 7,8,9,10,11,12,13,14,15 & 16 TO LOAD SWITCH AC+ PER THE CABINET MANUFACTURER'S INSTRUCTIONS.
3. PROGRAM CONTROLLER TO START UP IN PHASES 2 AND 6 GREEN.
4. ENABLE SIMULTANEOUS GAP-OUT FEATURE, ON CONTROLLER UNIT, FOR ALL PHASES.

EQUIPMENT INFORMATION

CONTROLLER.....CONTRACTOR SUPPLIED 2070L
CABINET .....CONTRACTOR SUPPLIED 332
SOFTWARE .....ECONOLITE OASIS 3.00.81
CABINET MOUNT.....BASE
OUTPUT FILE POSITIONS...18 (12-STD, 6-AUX)
LOAD SWITCHES USED.....S2,S4,S6
PHASES USED.....2,4,6
OVERLAPS.....NONE

FIELD CONNECTION HOOK-UP CHART

LOAD SWITCH NO.	S1	S2	S2P	S3	S4	S4P	S5	S6	S6P	S7	S8	S8P	S9	S10	S11	S12	S13	S14
PHASE	1	2	2 PED	3	4	4 PED	5	6	6 PED	7	8	8 PED	OLA	OLB	SPARE	OLC	OLD	SPARE
SIGNAL HEAD NO.	NU	21,22	NU	NU	41,42	NU	NU	61 62,63	NU	NU	NU	NU	NU	NU	NU	NU	NU	NU
GREEN		130			103			136										
YELLOW		129			102			135										
RED		128			101			134										
RED ARROW																		
YELLOW ARROW																		
GREEN ARROW																		

NU = NOT USED

✳ DENOTES INSTALL LOAD RESISTOR. SEE LOAD RESISTOR INSTALLATION DETAIL THIS PAGE.

INPUT FILE POSITION LAYOUT

(front view)

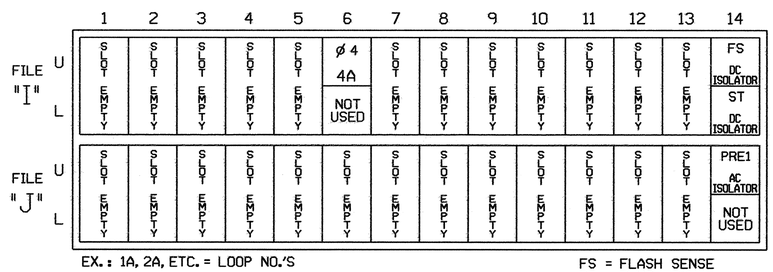

EX.: 1A, 2A, ETC. = LOOP NO.'S

FS = FLASH SENSE
ST = STOP TIME
PRE = PREEMPT

INPUT FILE CONNECTION & PROGRAMMING CHART

LOOP NO.	LOOP TERMINAL	INPUT FILE POS.	PIN NO.	INPUT ASSIGNMENT NO.	DETECTOR NO.	NEMA PHASE	CALL	EXTEND	FULL TIME DELAY	STRETCH TIME	DELAY TIME
4A	TB4-9,10	I6U	41	3	4	4	Y	Y			10

INPUT FILE POSITION LEGEND: J2L
FILE J
SLOT 2
LOWER

THIS ELECTRICAL DETAIL IS FOR
THE SIGNAL DESIGN: 12-0155T1
DESIGNED: 10/30/04
SEALED: 08/09/04
REVISED:

SIGNAL UPGRADE - TEMPORARY DESIGN 1 - SHEET 1 OF 2

ELECTRICAL AND PROGRAMMING DETAILS FOR:

Prepared in the Offices of:
Traffic Engineering and Safety Systems Branch
Signals Management Section
122 N. McDowell St., Raleigh, NC 27603

NC 274 (BESSEMER CITY ROAD)
AT
SR 1338 (NORTHWEST BLVD.)

DIVISION 12 GASTON COUNTY GASTONIA

PLAN DATE: JULY 2004 REVIEWED BY: TJA
PREPARED BY: WILLIAM HAIRSTON REVIEWED BY:

REVISIONS	INIT.	DATE

SEAL
NORTH CAROLINA PROFESSIONAL SEAL 022013 ENGINEER GEORGE C. BROWN

George C. Brown 8/12/04
SIGNATURE DATE

SIG. INVENTORY NO. 12-0155T1

10-AUG-2004 16:06
S:\MS tgdgn\TJoyce\U2408\12015S_2004xxxxa.dgn
TJoyce

PROJECT REFERENCE NO.	SHEET NO.
U-2408	SIG. 39

RAILROAD PREEMPTION PROGRAMMING DETAIL

(program controller as shown below)

FROM MAIN MENU PRESS 'A' (PREEMPTION), THEN '1' (STANDARD PREEMPTIONS).

```
   PREEMPTION  #1  SETTINGS (NEXT:1-10)
INTERVAL/TIMING  |  CLEAR/DWELL PHASES
  GRN YEL  RED   |123456789101112131415 16
1  33  4.0  2.0  |   X
2 255  0.0  0.0  | X   X
3   0  0.0  0.0  |
4   0  0.0  0.0  |
5   1  0.0  0.0  |   X
EXIT CALLS       |
              OPTIONS
PRIORITY (Y/N TO SELECT) ............HIGH
DELAY TIMER (0-255 SEC) .............0
MIN GREEN BEFORE PRE (0= DEFAULT)....1
PED CLEAR BEFORE PRE (0= DEFAULT)....0
YELLOW CLEAR BEFORE PRE (0= DEFAULT).4.7
RED CLEAR BEFORE PRE (0= DEFAULT)....2.0
DWELL MIN TIMER (0-255 SEC) .........10
DWELL MAX TIMER (0=OFF,1-255MIN) ....0
DWELL HOLD-OVER TIMER (0-255) .......0
LATCH CALL? .........................N
LINK TO NEXT PREEMPT? ...............N
ENABLE BACKUP PROTECTION? ...........N
HOLD CLEAR 1 PHASES DURING DELAY? ...N
FAST GREEN FLASH DWELL PHASES? ......N
PED CLEARANCE THROUGH YELLOW? .......N
INHIBIT OVERLAP GREEN EXTENSION? ....N
SERVICE DURING SOFTWARE FLASH? ......N
REST IN RED DURING DWELL INTERVAL? ..N
FLASH DWELL INTERVAL? ...............N
ALLOW PEDS IN DWELL INTERVAL? .......N
RE-TIME DWELL INTERVAL? .............N
OVERLAPS:                | ABCDEFGHIJKLMNOP
DWELL INT FLASH YELLOW   |
OMIT OVERLAPS:           |
```

RAILROAD PREEMPTION WIRING DETAIL

(wire as shown below)

CABINET WIRING

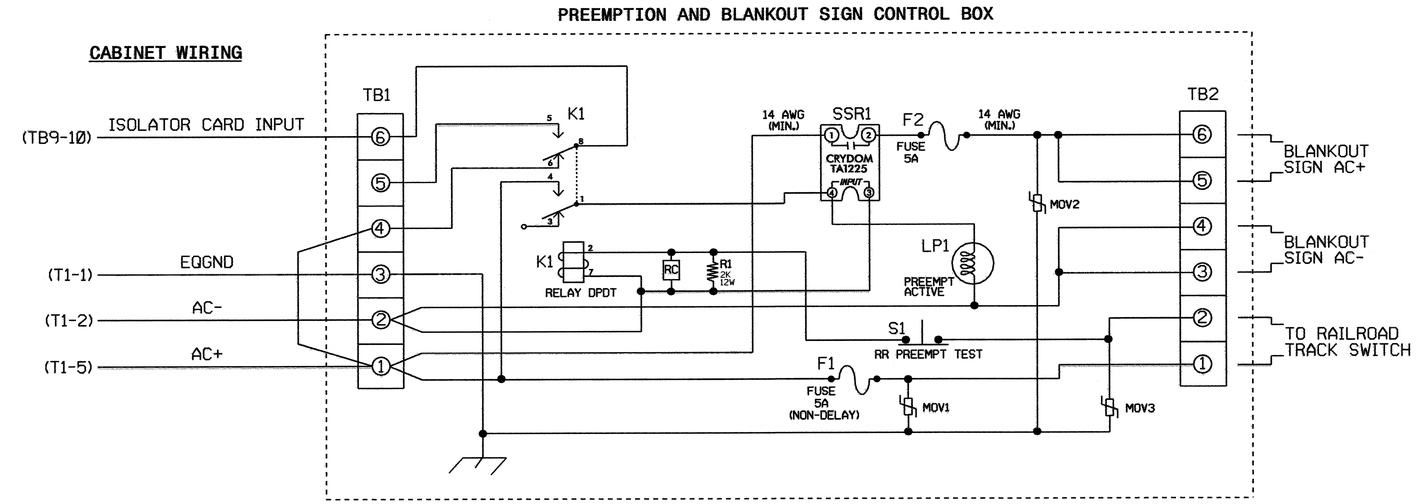

NOTES

1. RELAY K1 IS SHOWN IN THE ENERGIZED (PREEMPT NOT ACTIVE) NORMAL OPERATION STATE.
2. RELAY K1 IS A DPDT WITH 120VAC COIL. POTTER & BRUMFIELD KRP11AG WITH OCTAL BASE OR APPROVED EQUIVALENT.
3. RELAY SSR1 IS A SPST (NORMALLY OPEN) SOLID STATE RELAY WITH AC INPUT AND AC (25 AMP) OUTPUT. CRYDOM TA1225 OR APPROVED EQUIVALENT.
4. AC ISOLATOR CARD SHALL ACTIVATE PREEMPTION UPON REMOVAL OF AC+ FROM THE INPUT (AS SHOWN ABOVE).
5. RESISTOR IS VALUED AT 2K OHM, 12 WATT. CLAROSTAT PART NO. VPR10F-2K OR APPROVED EQUIVALENT.
6. RC NETWORK IS VALUED AT .1 MICROFARAD, 100 OHM.
7. IF REPLACEMENT MOVS ARE NEEDED, GE PART NO. V150LA20A MAY BE USED.
8. PREEMPTION AND BLANKOUT SIGN CONTROL BOX IS A CONTROL TECHNOLOGIES PART NO. 2299-101 OR APPROVED EQUIVALENT.
9. IMPORTANT!! A JUMPER MUST BE ADDED BETWEEN INPUT FILE TERMINALS J14-E AND J14-K IF NOT ALREADY PRESENT. ALSO, TERMINAL TB9-12 (ON INPUT PANEL) SHALL BE CONNECTED TO AC NEUTRAL (JUMPER MAY HAVE TO BE ADDED).

FRONT VIEW

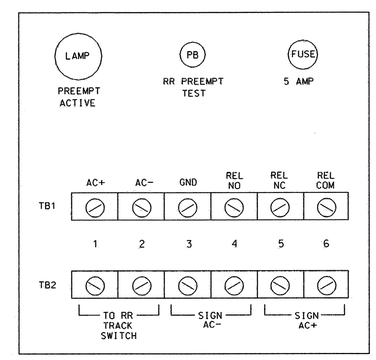

THIS ELECTRICAL DETAIL IS FOR
THE SIGNAL DESIGN: 12-0155T1
DESIGNED: 10/30/03
SEALED: 08/09/04
REVISED:

SIGNAL UPGRADE - TEMPORARY DESIGN 1 - SHEET 2 OF 2

ELECTRICAL AND PROGRAMMING DETAILS FOR:

Prepared in the Offices of:

Traffic Engineering and Safety Systems Branch
STATE OF NORTH CAROLINA DEPARTMENT OF TRANSPORTATION
Signals Management Section

122 N. McDowell St., Raleigh, NC 27603

NC 274 (BESSEMER CITY ROAD)
AT
SR 1338 (NORTHWEST BLVD.)

DIVISION 12 | GASTON COUNTY | GASTONIA

PLAN DATE: JULY 2004 | REVIEWED BY: T Jyd

PREPARED BY: WILLIAM HAIRSTON | REVIEWED BY:

REVISIONS	INIT.	DATE

SEAL

NORTH CAROLINA PROFESSIONAL SEAL 022013 ENGINEER GEORGE C. BROWN

George C Brown 8/12/04
SIGNATURE DATE

SIG. INVENTORY NO. 12-0155T1

10-AUG-2004 16:07
S:\Sig\dgn*\Joyce\U2408\12015S_2004xxxx.dgn
Joyce

METRIC	PROJECT REFERENCE NO.	SHEET NO.
	U-2408	SIG. 40

2 PHASE SEMI ACTUATED RAILROAD PREEMPTION ISOLATED

PHASING DIAGRAM

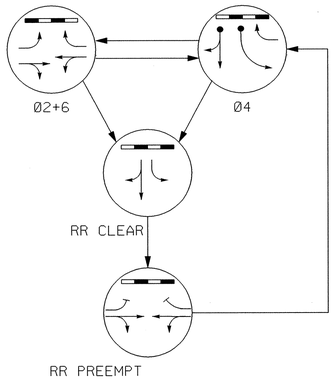

PHASING DIAGRAM DETECTION LEGEND

- DETECTED MOVEMENT
- UNDETECTED MOVEMENT (OVERLAP)
- UNSIGNALIZED MOVEMENT
- PEDESTRIAN MOVEMENT

TABLE OF OPERATION

SIGNAL FACE	PHASE Ø2+6	PHASE Ø4	RR CLEAR	RR PREEMPT	FLASH
21,22	G	R	R	G	Y
41,42	R	G	G	R	R
61	G	R	R	G	Y
62	G	R	R	G	Y

SIGNAL FACE I.D.

Denotes L.E.D.

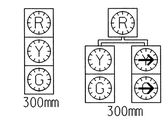

21, 22
41, 42
61

62

PLAN QUANTITIES

Pay Item	Meters
Signal Cable	0
Messenger Cable	0
Loop Lead-in Cable	170

NOTES

1. Refer to "Roadway Standard Drawings NCDOT" dated January 2002 and "Standard Specifications for Roads and Structures" dated January 2002.
2. Set all detector units to presence mode.
3. Reposition existing signal heads numbered #21, 22, 41, and 61.
4. This location contains railroad preemption phasing. Do not program signal for late night flashing operation.

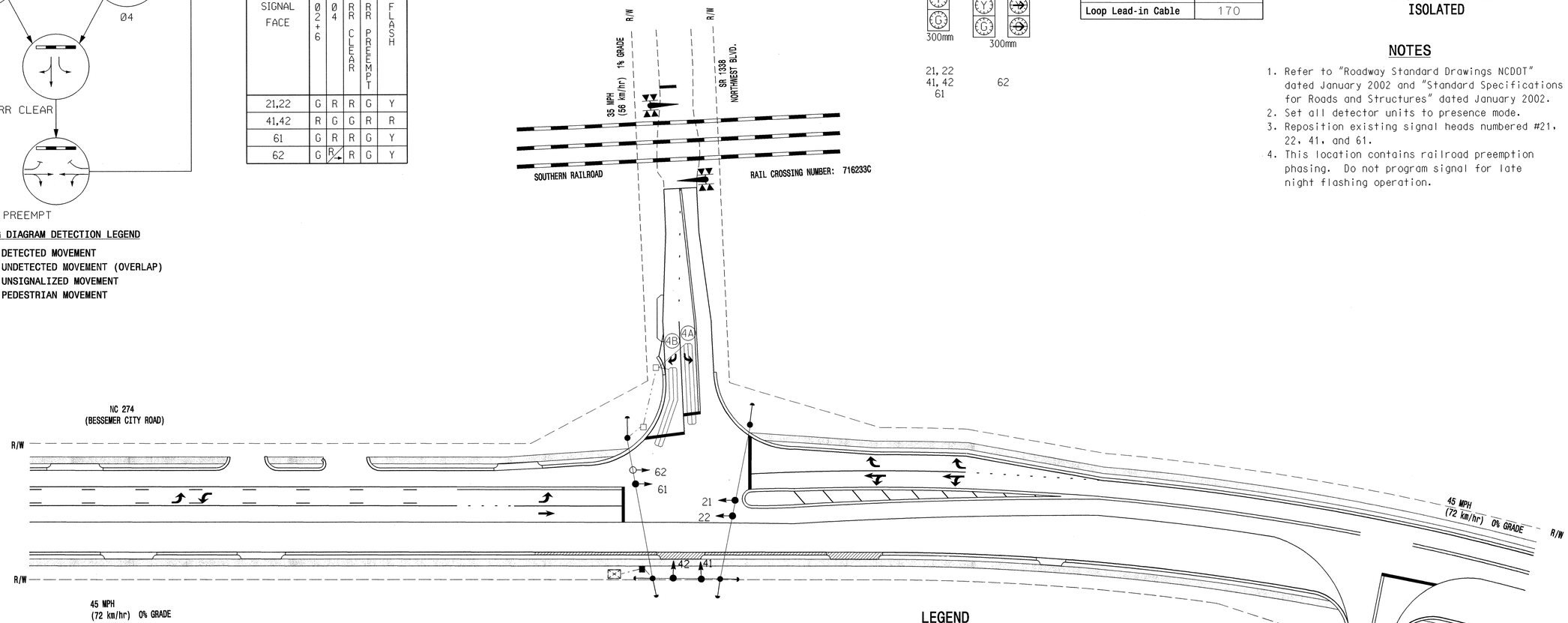

LEGEND

PROPOSED		EXISTING
	Traffic Signal Head	
	Modified Signal Head	N/A
	Sign	
	Pedestrian Signal Head With Push Button & Sign	
	Signal Pole with Guy	
	Signal Pole with Sidewalk Guy	
	Inductive Loop Detector	
	Controller & Cabinet	
	Junction Box	
	50mm Underground Conduit	
N/A	Right of Way with Marker	
	Directional Arrow	
	Pavement Marking Arrow	
N/A	Railroad Gate and Flasher	
N/A	Railroad Tracks	
	Construction Zone	

2070 RAIL PREEMPTION

Interval 1 – Track Clearance Green	30
Interval 1 – Track Clearance Yellow	4.0
Interval 1 – Track Clearance Red	2.0
Interval 2 – Dwell Green	255
Interval 2 – Dwell Yellow	0.0*
Interval 2 – Dwell Red	0.0*
Interval 5 – Exit Green	1
Interval 5 – Exit Yellow	0.0*
Interval 5 – Exit Red	0.0*
Delay Time	0
Min Green Before Pre	1
Ped Clear Before Pre	0
Yellow Clear Before Pre	4.7
Red Clear Before Pre	2.0
Dwell Min Time	10
Ped Clear Through Yellow	N

* Clearance time defaults to time used for phase during normal operation.

2070L TIMING CHART

FEATURE	PHASE 2	PHASE 4	PHASE 6
Min Green 1 *	12	7	12
Extension 1 *	0.0	1.0	0.0
Max Green 1 *	45	20	45
Yellow Clearance	4.7	4.0	4.7
Red Clearance	1.5	2.0	1.5
Walk 1 *	-	-	-
Don't Walk 1	-	-	-
Seconds Per Actuation *	-	-	-
Max Variable Initial *	-	-	-
Time Before Reduction *	-	-	-
Time To Reduce *	-	-	-
Minimum Gap	-	-	-
Recall Mode	MAX RECALL	-	MAX RECALL
Vehicle Call Memory	YELLOW	-	YELLOW
Dual Entry	-	-	-
Simultaneous Gap	ON	ON	ON

* These values may be field adjusted. Do not adjust Min Green and Extension times for phases 2 and 6 lower than what is shown. Min Green for all other phases should not be lower than 4 seconds.

2070L LOOP & DETECTOR INSTALLATION

INDUCTIVE LOOPS					DETECTOR PROGRAMMING						
LOOP	SIZE (m)	TURNS	DISTANCE FROM STOPBAR (m)	NEW LOOP	PHASE	CALLING	EXTENSION	FULL TIME DELAY	SYSTEM LOOP	STRETCH TIME	DELAY TIME	NEW CARD
4A	1.8 X 18	2-4-2	+2	Y	4	Y	Y	-	-	-	3	-
4B	1.8 X 18	2-4-2	+2	Y	4	Y	Y	-	-	-	10	Y

Prepared in the Office of:

THE LPA GROUP TRANSPORTATION CONSULTANTS

THE LPA GROUP of North Carolina, p.a.
4904 PROFESSIONAL COURT, SUITE 201
Raleigh, North Carolina 27609

SIGNAL UPGRADE - TEMPORARY DESIGN 2

Traffic Engineering and Safety Systems Branch
STATE OF NORTH CAROLINA DEPARTMENT OF TRANSPORTATION
Signals and Geometrics Section

SCALE 5 0 10 1:500

N.C. 274 (BESSEMER CITY ROAD) AT SR1338 (NORTHWEST BLVD.)

DIVISION 12 GASTON COUNTY GASTONIA

PLAN DATE: OCT. 30, 2003 REVIEWED BY: R.DUBNICKA, P.E.

PREPARED BY: RGL REVIEWED BY:

REVISIONS	INIT.	DATE

SEAL

NORTH CAROLINA PROFESSIONAL SEAL 027742 ENGINEER ROBERT J. DUBNICKA

Robert J. Dubnicka 8-9-04
SIGNATURE DATE

SIG. INVENTORY NO. 12-0155T2

09-AUG-2004 12:27
I:\Proj\U2408\Signal Plans\SIG-6A.dgn
rdubnicka

PROJECT REFERENCE NO.	SHEET NO.
U-2408	SIG. 4

EDI MODEL 2010ECL CONFLICT MONITOR PROGRAMMING DETAIL

(remove jumpers and set switches as shown)

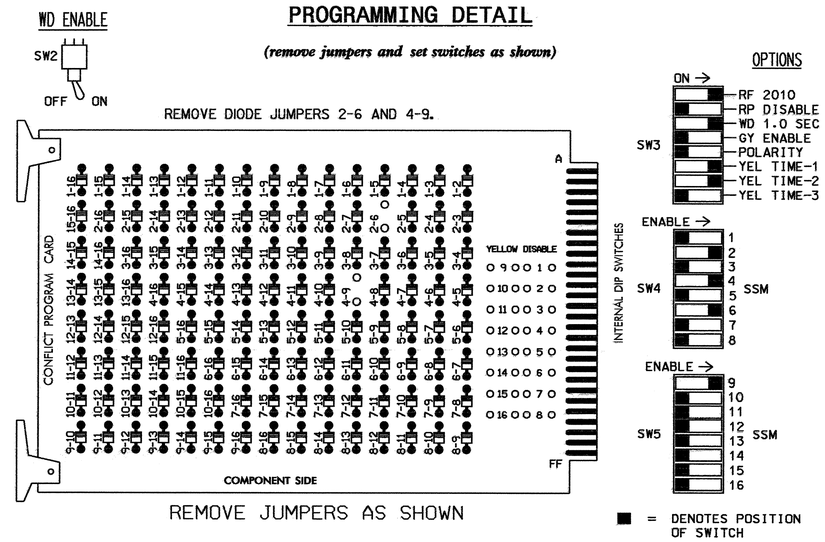

REMOVE JUMPERS AS SHOWN

NOTES:

1. CARD IS PROVIDED WITH ALL DIODE JUMPERS IN PLACE. REMOVAL OF ANY JUMPER ALLOWS ITS CHANNELS TO RUN CONCURRENTLY.
2. MAKE SURE JUMPERS SEL1-SEL5 ARE PRESENT ON THE MONITOR BOARD.

NOTES

1. TO PREVENT "FLASH-CONFLICT" PROBLEMS, INSERT RED FLASH PROGRAM BLOCKS FOR ALL UNUSED VEHICLE LOAD SWITCHES IN THE OUTPUT FILE. THE INSTALLER SHALL VERIFY THAT SIGNAL HEADS FLASH IN ACCORDANCE WITH THE SIGNAL PLANS.
2. ENSURE THAT RED ENABLE IS ACTIVE AT ALL TIMES DURING NORMAL OPERATION. TO PREVENT RED FAILURES ON UNUSED MONITOR CHANNELS, TIE UNUSED RED MONITOR INPUTS 1,3,5, 7,8,10,11,12,13,14,15 & 16 TO LOAD SWITCH AC+ PER THE CABINET MANUFACTURER'S INSTRUCTIONS.
3. PROGRAM CONTROLLER TO START UP IN PHASES 2 AND 6 GREEN.
4. ENABLE SIMULTANEOUS GAP-OUT FEATURE, ON CONTROLLER UNIT, FOR ALL PHASES.

EQUIPMENT INFORMATION

CONTROLLER.....CONTRACTOR SUPPLIED 2070L
CABINET .....CONTRACTOR SUPPLIED 332
SOFTWARE .....ECONOLITE OASIS 3.00.81
CABINET MOUNT.....BASE
OUTPUT FILE POSITIONS...18 (12-STD, 6-AUX)
LOAD SWITCHES USED.....S2,S4,S6,S9
PHASES USED.....2,4,6
OVERLAP A:.....4

FIELD CONNECTION HOOK-UP CHART

LOAD SWITCH NO.	S1	S2	S2P	S3	S4	S4P	S5	S6	S6P	S7	S8	S8P	S9	S10	S11	S12	S13	S14
PHASE	1	2	2 PED	3	4	4 PED	5	6	6 PED	7	8	8 PED	OLA	OLB	SPARE	OLC	OLD	SPARE
SIGNAL HEAD NO.	NU	21,22	NU	NU	41,42	NU	NU	61,62	NU	NU	NU	NU	62	NU	NU	NU	NU	NU
GREEN		130			103			136										
YELLOW		129			102			135										
RED		128			101			134					*					
RED ARROW																		
YELLOW ARROW													A122					
GREEN ARROW													A123					

NU = NOT USED
* DENOTES INSTALL LOAD RESISTOR. SEE LOAD RESISTOR INSTALLATION DETAIL THIS PAGE.

INPUT FILE POSITION LAYOUT

(front view)

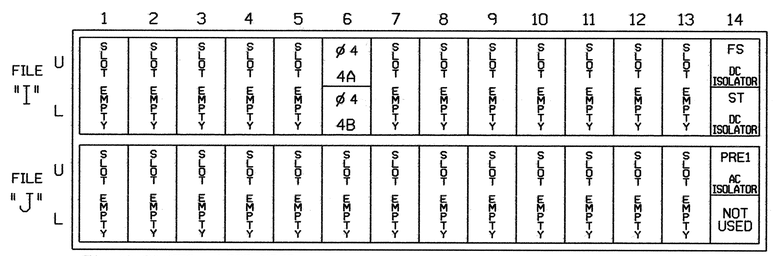

EX.: 1A, 2A, ETC. = LOOP NO.'S

FS = FLASH SENSE
ST = STOP TIME
PRE = PREEMPT

INPUT FILE CONNECTION & PROGRAMMING CHART

LOOP NO.	LOOP TERMINAL	INPUT FILE POS.	PIN NO.	INPUT ASSIGNMENT NO.	DETECTOR NO.	NEMA PHASE	CALL	EXTEND	FULL TIME DELAY	STRETCH TIME	DELAY TIME
4A	TB4-9,10	I6U	41	3	4	4	Y	Y			3
4B	TB4-11,12	I6L	45	7	14	4	Y	Y			10

INPUT FILE POSITION LEGEND: J2L
FILE J
SLOT 2
LOWER

LOAD RESISTOR INSTALLATION DETAIL

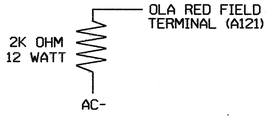

NOTE: THE PURPOSE OF THIS RESISTOR IS TO LOAD THE CHANNEL RED MONITOR INPUT IN ORDER FOR THE SIGNAL SEQUENCE MONITOR TO USE THE FULL SIGNAL SEQUENCE MONITORING CAPABILITY ON CHANNELS THAT DO NOT USE THE RED DISPLAY IN THE FIELD.

THIS ELECTRICAL DETAIL IS FOR
THE SIGNAL DESIGN: 12-0155T2
DESIGNED: 10/30/03
SEALED: 08/09/04
REVISED:

SIGNAL UPGRADE - TEMPORARY DESIGN 2 - SHEET 1 OF 2

ELECTRICAL AND PROGRAMMING DETAILS FOR:

Prepared in the Offices of:
Traffic Engineering and Safety Systems Branch
STATE OF NORTH CAROLINA DEPARTMENT OF TRANSPORTATION
Signals Management Section
122 N. McDowell St., Raleigh, NC 27603

NC 274 (BESSEMER CITY ROAD)
AT
SR 1338 (NORTHWEST BLVD.)

DIVISION 12 GASTON COUNTY GASTONIA

PLAN DATE: JULY 2004 REVIEWED BY: T Jorge
PREPARED BY: WILLIAM HAIRSTON REVIEWED BY:

REVISIONS	INIT.	DATE

SEAL
NORTH CAROLINA PROFESSIONAL SEAL 022013 ENGINEER GEORGE C. BROWN

George C. Brown 8/13/04
SIGNATURE DATE

SIG. INVENTORY NO. 12-0155T2

10-AUG-2004 16:09
S:\Traffic\Sigm\TJoyce\U2408\12155_2004xxxxb.dgn
$$$$opts

PROJECT REFERENCE NO.	SHEET NO.
U-2408	SIG. 4a

RAILROAD PREEMPTION PROGRAMMING DETAIL

(program controller as shown below)

FROM MAIN MENU PRESS 'A' (PREEMPTION), THEN '1' (STANDARD PREEMPTIONS).

```
   PREEMPTION  #1  SETTINGS (NEXT:1-10)
INTERVAL/TIMING ¦  CLEAR/DWELL PHASES
  GRN YEL  RED  ¦123456789101112131415 16
1  30  4.0  2.0 ¦   X
2 255  0.0  0.0 ¦ X   X
3   0  0.0  0.0 ¦
4   0  0.0  0.0 ¦
5   1  0.0  0.0 ¦   X
EXIT CALLS      ¦
            OPTIONS
PRIORITY (Y/N TO SELECT) ............HIGH
DELAY TIMER (0-255 SEC) .............0
MIN GREEN BEFORE PRE (0= DEFAULT)....1
PED CLEAR BEFORE PRE (0= DEFAULT)....0
YELLOW CLEAR BEFORE PRE (0= DEFAULT).4.7
RED CLEAR BEFORE PRE (0= DEFAULT)....2.0
DWELL MIN TIMER (0-255 SEC) .........10
DWELL MAX TIMER (0=OFF,1-255MIN) ....0
DWELL HOLD-OVER TIMER (0-255) .......0
LATCH CALL? .........................N
LINK TO NEXT PREEMPT? ...............N
ENABLE BACKUP PROTECTION? ...........N
HOLD CLEAR 1 PHASES DURING DELAY? ...N
FAST GREEN FLASH DWELL PHASES? ......N
PED CLEARANCE THROUGH YELLOW? .......N
INHIBIT OVERLAP GREEN EXTENSION? ....N
SERVICE DURING SOFTWARE FLASH? ......N
REST IN RED DURING DWELL INTERVAL? ..N
FLASH DWELL INTERVAL? ...............N
ALLOW PEDS IN DWELL INTERVAL? .......N
RE-TIME DWELL INTERVAL? .............N
OVERLAPS:                ¦ABCDEFGHIJKLMNOP
DWELL INT FLASH YELLOW   ¦
OMIT OVERLAPS:           ¦X
```

RAILROAD PREEMPTION WIRING DETAIL

(wire as shown below)

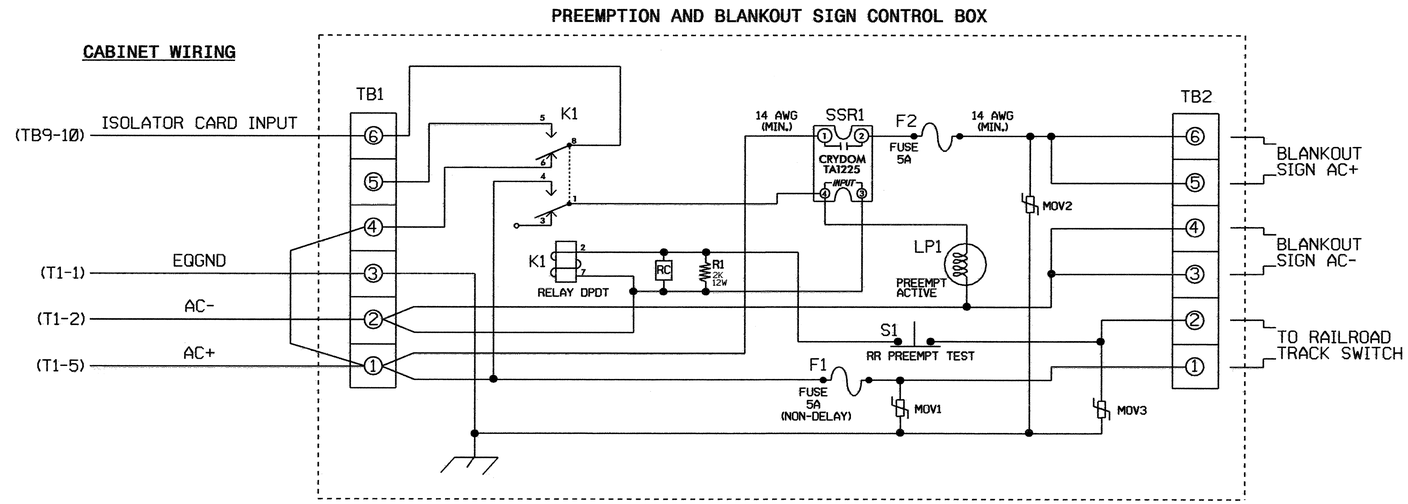

NOTES

1. RELAY K1 IS SHOWN IN THE ENERGIZED (PREEMPT NOT ACTIVE) NORMAL OPERATION STATE.
2. RELAY K1 IS A DPDT WITH 120VAC COIL. POTTER & BRUMFIELD KRP11AG WITH OCTAL BASE OR APPROVED EQUIVALENT.
3. RELAY SSR1 IS A SPST (NORMALLY OPEN) SOLID STATE RELAY WITH AC INPUT AND AC (25 AMP) OUTPUT. CRYDOM TA1225 OR APPROVED EQUIVALENT.
4. AC ISOLATOR CARD SHALL ACTIVATE PREEMPTION UPON REMOVAL OF AC+ FROM THE INPUT (AS SHOWN ABOVE).
5. RESISTOR IS VALUED AT 2K OHM, 12 WATT. CLAROSTAT PART NO. VPR10F-2K OR APPROVED EQUIVALENT.
6. RC NETWORK IS VALUED AT .1 MICROFARAD, 100 OHM.
7. IF REPLACEMENT MOVS ARE NEEDED, GE PART NO. V150LA20A MAY BE USED.
8. PREEMPTION AND BLANKOUT SIGN CONTROL BOX IS A CONTROL TECHNOLOGIES PART NO. 2299-101 OR APPROVED EQUIVALENT.
9. IMPORTANT!! A JUMPER MUST BE ADDED BETWEEN INPUT FILE TERMINALS J14-E AND J14-K IF NOT ALREADY PRESENT. ALSO, TERMINAL TB9-12 (ON INPUT PANEL) SHALL BE CONNECTED TO AC NEUTRAL (JUMPER MAY HAVE TO BE ADDED).

FRONT VIEW

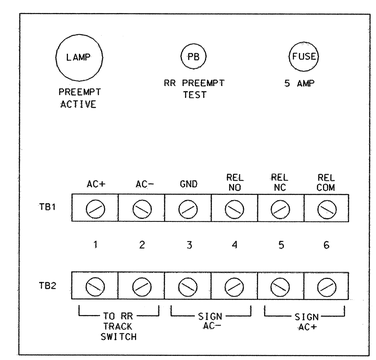

THIS ELECTRICAL DETAIL IS FOR
THE SIGNAL DESIGN: 12-0155T2
DESIGNED: 10/30/03
SEALED: 08/09/04
REVISED:

SIGNAL UPGRADE - TEMPORARY DESIGN 2 - SHEET 2 OF 2

ELECTRICAL AND PROGRAMMING DETAILS FOR:

Prepared in the Offices of:
Traffic Engineering and Traffic Control Branch
STATE OF NORTH CAROLINA DEPARTMENT OF TRANSPORTATION
Signals Management Section
122 N. McDowell St., Raleigh, NC 27603

NC 274 (BESSEMER CITY ROAD)
AT
SR 1338 (NORTHWEST BLVD.)

DIVISION 12 GASTON COUNTY GASTONIA

PLAN DATE: JULY 2004 REVIEWED BY: TJA
PREPARED BY: WILLIAM HAIRSTON REVIEWED BY:

REVISIONS	INIT.	DATE

SEAL
NORTH CAROLINA PROFESSIONAL SEAL 022013 ENGINEER GEORGE C. BROWN

George C. Brown 8/13/04
SIGNATURE DATE

SIG. INVENTORY NO. 12-0155T2

10-AUG-2004 16:10
S:\MS\gmgmt\joyce\U2408\12155_2004xxxxa.dgn
jjoyce

METRIC	PROJECT REFERENCE NO.	SHEET NO.
	U-2408	SIG. 43

3 PHASE FULLY ACTUATED RAILROAD PREEMPTION GASTONIA CITY SIGNAL SYSTEM

PHASING DIAGRAM

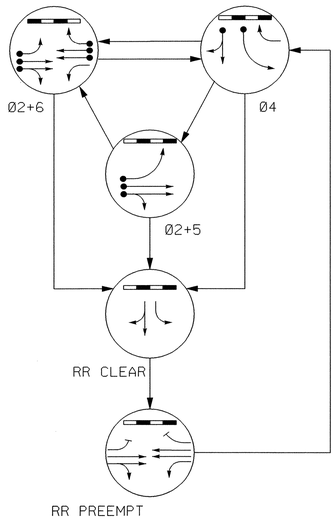

TABLE OF OPERATION

SIGNAL FACE	PHASE Ø2+5	Ø2+6	Ø4	RR CLEAR	RR PREEMPT	FLASH
21	G	G	R	R	G	Y
22	G	G	R	R	G	Y
41,42	R	R	G	G	R	R
61,62	R	G	R	R	G	Y
63	R	G	R	R	G	Y

SIGNAL FACE I.D.

Denotes L.E.D.

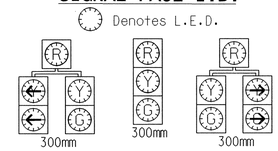

21 | 22, 41, 42, 61, 62 | 63

PLAN QUANTITIES

Pay Item	Meters
Signal Cable	310
Messenger Cable	0
Loop Lead-in Cable	870

NOTES

1. Refer to "Roadway Standard Drawings NCDOT" dated January 2002 and "Standard Specifications for Roads and Structures" dated January 2002.
2. Set all detector units to presence mode.
3. Omit Phase 5 during Phase 6 on.
4. Program controller to clear from phase 2+6 to phase 5 by progressing through phase 4 (see Electrical Details).
5. Maximum times shown in timing chart are for free run operation only. Coordinated signal system timing values shall supersede these values.
6. System data: Controller Asset #: 0155
7. This location contains railroad preemption phasing. Do not program signal for late night flashing operation.

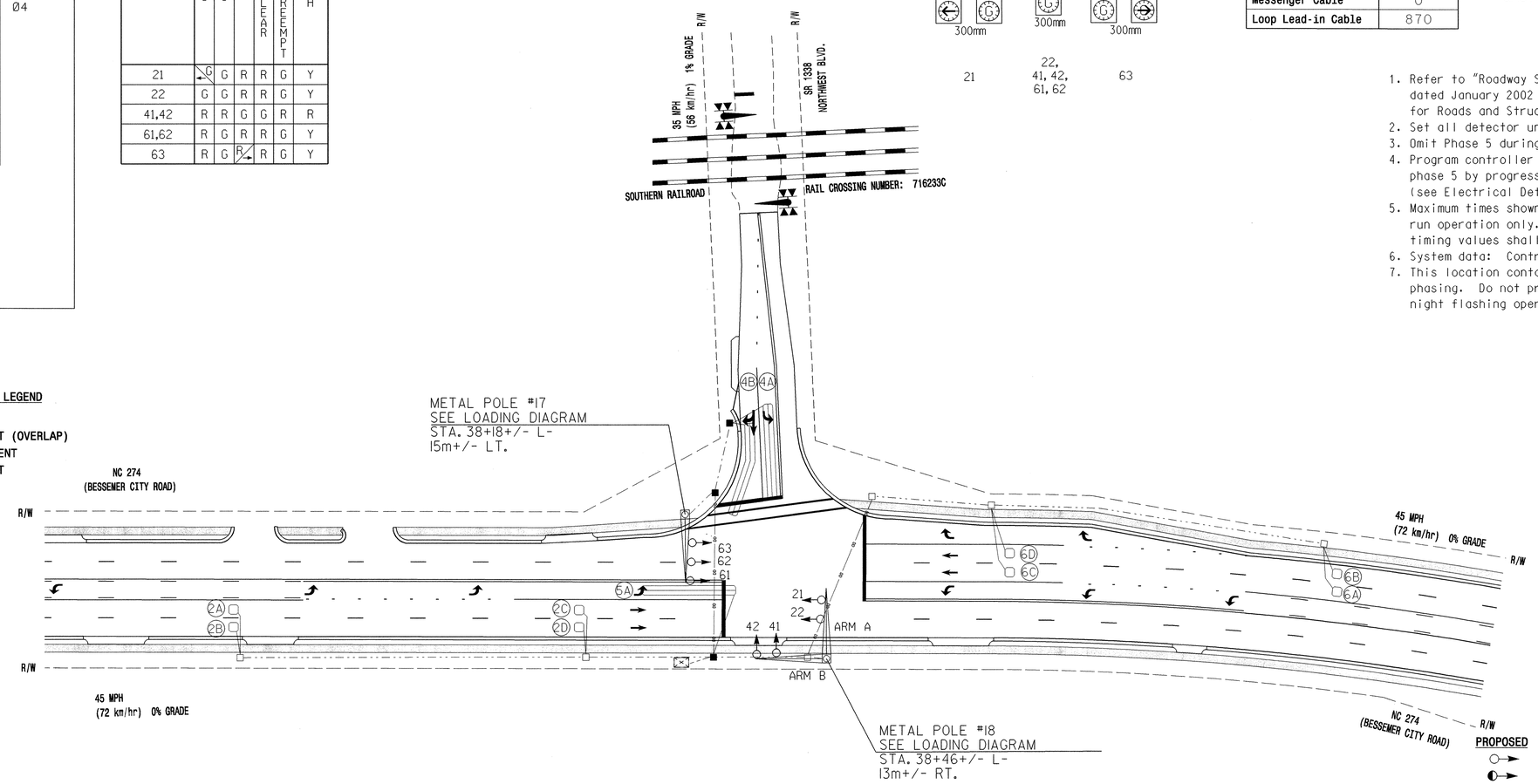

PHASING DIAGRAM DETECTION LEGEND

- DETECTED MOVEMENT
- UNDETECTED MOVEMENT (OVERLAP)
- UNSIGNALIZED MOVEMENT
- PEDESTRIAN MOVEMENT

LEGEND

PROPOSED		EXISTING
	Traffic Signal Head	
	Modified Signal Head	N/A
	Sign	
	Pedestrian Signal Head With Push Button & Sign	
	Signal Pole with Guy	
	Signal Pole with Sidewalk Guy	
	Inductive Loop Detector	
	Controller & Cabinet	
	Junction Box	
	50mm Underground Conduit	
N/A	Right of Way with Marker	
	Directional Arrow	
	Pavement Marking Arrow	
	Metal Pole with Mast Arm	
N/A	Railroad Gate and Flasher	
N/A	Railroad Tracks	
	Directional Drill 2 - 50mm Polyethylene Conduit	N/A

2070L TIMING CHART

FEATURE	PHASE 2	4	5	6
Min Green 1 *	12	7	7	12
Extension 1 *	2.0	1.0	1.0	2.0
Max Green 1 *	45	20	15	45
Yellow Clearance	4.7	4.0	4.0	4.7
Red Clearance	1.5	2.0	1.5	1.5
Walk 1 *	-	-	-	-
Don't Walk 1	-	-	-	-
Seconds Per Actuation *	-	-	-	-
Max Variable Initial *	-	-	-	-
Time Before Reduction *	-	-	-	-
Time To Reduce *	-	-	-	-
Minimum Gap	-	-	-	-
Recall Mode	MIN RECALL	-	-	MIN RECALL
Vehicle Call Memory	YELLOW	-	-	YELLOW
Dual Entry	-	-	-	-
Simultaneous Gap	ON	ON	ON	ON

* These values may be field adjusted. Do not adjust Min Green and Extension times for phases 2 and 6 lower than what is shown. Min Green for all other phases should not be lower than 4 seconds.

2070L LOOP & DETECTOR INSTALLATION

INDUCTIVE LOOPS					DETECTOR PROGRAMMING						
LOOP	SIZE (m)	TURNS	DISTANCE FROM STOPBAR (m)	NEW LOOP	PHASE	CALLING	EXTENSION	FULL TIME DELAY	SYSTEM LOOP	STRETCH TIME	DELAY TIME	NEW CARD
2A,2B	1.8 X 1.8	4	93	Y	2	Y	Y	-	-	1.8	-	Y
2C,2D	1.8 X 1.8	4	27	Y	2	Y	Y	-	-	-	-	Y
4A	1.8 X 18	2-4-2	0	Y	4	Y	Y	-	-	-	3	-
4B	1.8 X 18	2-4-2	+2	Y	4	Y	Y	-	-	-	10	-
5A	1.8 X 18	2-4-2	+2	Y	5	Y	Y	-	-	-	15	Y
					2	Y	Y	-	-	-	-	Y
6A,6B	1.8 X 1.8	5	90	Y	6	Y	Y	-	-	1.8	-	Y
6C,6D	1.8 X 1.8	4	27	Y	6	Y	Y	-	-	-	-	Y

2070 RAIL PREEMPTION

Interval 1 – Track Clearance Green	30
Interval 1 – Track Clearance Yellow	4.0
Interval 1 – Track Clearance Red	2.0
Interval 2 – Dwell Green	255
Interval 2 – Dwell Yellow	0.0*
Interval 2 – Dwell Red	0.0*
Interval 5 – Exit Green	1
Interval 5 – Exit Yellow	0.0*
Interval 5 – Exit Red	0.0*
Delay Time	0
Min Green Before Pre	1
Ped Clear Before Pre	0
Yellow Clear Before Pre	4.7
Red Clear Before Pre	2.0
Dwell Min Time	10
Ped Clear Through Yellow	N

* Clearance time defaults to time used for phase during normal operation.

Prepared in the Office of:

THE LPA GROUP
TRANSPORTATION CONSULTANTS
THE LPA GROUP of North Carolina, p.a.
4904 PROFESSIONAL COURT, SUITE 201
Raleigh, North Carolina 27609

SIGNAL UPGRADE - FINAL DESIGN

Traffic Engineering and Safety Systems Branch
Signals and Geometrics Section
DIVISION OF HIGHWAYS
STATE OF NORTH CAROLINA
DEPARTMENT OF TRANSPORTATION

N.C. 274 (BESSEMER CITY ROAD)
AT
SR1338 (NORTHWEST BLVD.)

DIVISION 12 GASTON COUNTY GASTONIA

PLAN DATE: OCT. 30, 2003 REVIEWED BY: R.DUBNICKA, P.E.
PREPARED BY: RGL REVIEWED BY:

SCALE 5 0 10 1:500

REVISIONS	INIT.	DATE

SEAL
NORTH CAROLINA PROFESSIONAL SEAL 027742 ENGINEER ROBERT J. DUBNICKA
Robert J. Dubnicka 8-9-04
SIGNATURE DATE
SIG. INVENTORY NO. 12-0155

09-AUG-2004 12:27
T:\Traffic\MU2408\Signal Plans\SIG-6B.dgn
r0dub1006

PROJECT REFERENCE NO.	SHEET NO.
U-2408	SIG. 44

EDI MODEL 2010ECL CONFLICT MONITOR PROGRAMMING DETAIL

(remove jumpers and set switches as shown)

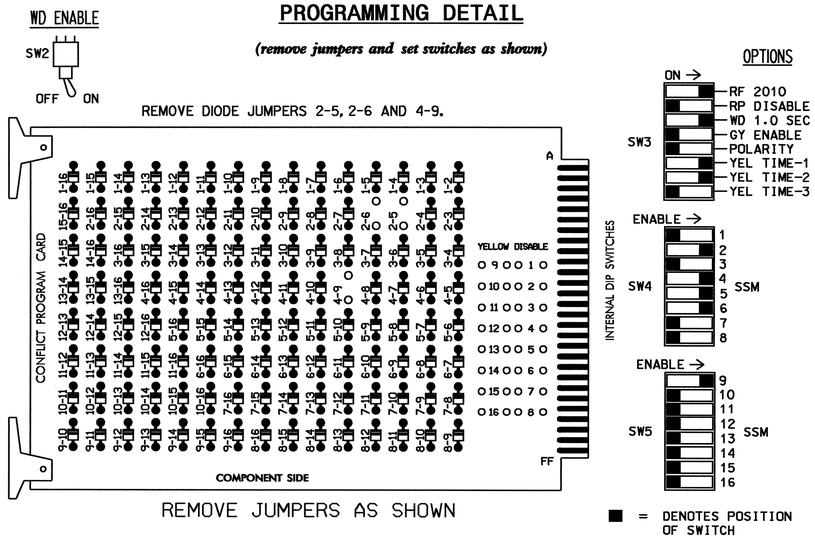

REMOVE JUMPERS AS SHOWN

■ = DENOTES POSITION OF SWITCH

NOTES:

1. CARD IS PROVIDED WITH ALL DIODE JUMPERS IN PLACE. REMOVAL OF ANY JUMPER ALLOWS ITS CHANNELS TO RUN CONCURRENTLY.
2. MAKE SURE JUMPERS SEL1-SEL5 ARE PRESENT ON THE MONITOR BOARD.

NOTES

1. TO PREVENT "FLASH-CONFLICT" PROBLEMS, INSERT RED FLASH PROGRAM BLOCKS FOR ALL UNUSED VEHICLE LOAD SWITCHES IN THE OUTPUT FILE. THE INSTALLER SHALL VERIFY THAT SIGNAL HEADS FLASH IN ACCORDANCE WITH THE SIGNAL PLANS.
2. ENSURE THAT RED ENABLE IS ACTIVE AT ALL TIMES DURING NORMAL OPERATION. TO PREVENT RED FAILURES ON UNUSED MONITOR CHANNELS, TIE UNUSED RED MONITOR INPUTS 1,3,7, 8,10,11,12,13,14,15 & 16 TO LOAD SWITCH AC+ PER THE CABINET MANUFACTURER'S INSTRUCTIONS.
3. PROGRAM CONTROLLER TO START UP IN PHASES 2 AND 6 GREEN.
4. ENABLE SIMULTANEOUS GAP-OUT FEATURE, ON CONTROLLER UNIT, FOR ALL PHASES.
5. THE CABINET AND CONTROLLER ARE PART OF THE GASTONIA CITY SIGNAL SYSTEM.

EQUIPMENT INFORMATION

CONTROLLER.....CONTRACTOR SUPPLIED 2070L
CABINET .....CONTRACTOR SUPPLIED 332
SOFTWARE .....ECONOLITE OASIS 3.00.81
CABINET MOUNT.....BASE
OUTPUT FILE POSITIONS...18 (12-STD, 6-AUX)
LOAD SWITCHES USED.....S2,S4,S5,S6,S9
PHASES USED.....2,4,5,6
OVERLAP A:.....4

FIELD CONNECTION HOOK-UP CHART

LOAD SWITCH NO.	S1	S2	S2P	S3	S4	S4P	S5	S6	S6P	S7	S8	S8P	S9	S10	S11	S12	S13	S14
PHASE	1	2	2 PED	3	4	4 PED	5	6	6 PED	7	8	8 PED	OLA	OLB	SPARE	OLC	OLD	SPARE
SIGNAL HEAD NO.	NU	21,22	NU	NU	41,42	NU	21	61 62,63	NU	NU	NU	NU	63	NU	NU	NU	NU	NU
GREEN		130			103			136										
YELLOW		129			102			135										
RED		128			101		*	134					*					
RED ARROW																		
YELLOW ARROW							132						A122					
GREEN ARROW							133						A123					

NU = NOT USED

* DENOTES INSTALL LOAD RESISTOR. SEE LOAD RESISTOR INSTALLATION DETAIL THIS PAGE.

INPUT FILE POSITION LAYOUT

(front view)

		1	2	3	4	5	6	7	8	9	10	11	12	13	14
FILE "I"	U	SLOT	ø2 2A,2B	SLOT	SLOT	SLOT	ø4 4A	SLOT	SLOT	SLOT	SLOT	SLOT	SLOT	SLOT	FS DC ISOLATOR
	L	EMPTY	ø2 2C,2D	EMPTY	EMPTY	EMPTY	ø4 4B	EMPTY	EMPTY	EMPTY	EMPTY	EMPTY	EMPTY	EMPTY	ST DC ISOLATOR
FILE "J"	U	SLOT	ø5 5A	ø6 6A,6B	SLOT	SLOT	SLOT	SLOT	SLOT	SLOT	SLOT	SLOT	SLOT	SLOT	PRE1 AC ISOLATOR
	L	EMPTY	ø2 5A	ø6 6C,6D	EMPTY	EMPTY	EMPTY	EMPTY	EMPTY	EMPTY	EMPTY	EMPTY	EMPTY	EMPTY	NOT USED

EX.: 1A, 2A, ETC. = LOOP NO.'S

FS = FLASH SENSE
ST = STOP TIME
PRE = PREEMPT

INPUT FILE CONNECTION & PROGRAMMING CHART

LOOP NO.	LOOP TERMINAL	INPUT FILE POS.	PIN NO.	INPUT ASSIGNMENT NO.	DETECTOR NO.	NEMA PHASE	CALL	EXTEND	FULL TIME DELAY	STRETCH TIME	DELAY TIME
2A,2B	TB2-5,6	I2U	39	1	2	2	Y	Y		1.8	
2C,2D	TB2-7,8	I2L	43	5	12	2	Y	Y			
4A	TB4-9,10	I6U	41	3	4	4	Y	Y			3
4B	TB4-11,12	I6L	45	7	14	4	Y	Y			10
5A[1]	TB3-5,6	J2U	40	2	6	5	Y	Y			15
	TB3-7,8	J2L	44	6	16	2	Y	Y			
6A,6B	TB3-9,10	J3U	64	26	36	6	Y	Y		1.8	
6C,6D	TB3-11,12	J3L	77	39	46	6	Y	Y			

[1] ADD JUMPERS FROM TB3-5 TO TB3-7, AND FROM TB3-6 TO TB3-8.

INPUT FILE POSITION LEGEND: J2L
FILE J
SLOT 2
LOWER

LOAD RESISTOR INSTALLATION DETAIL

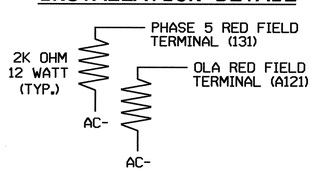

NOTE: THE PURPOSE OF THESE RESISTORS IS TO LOAD THE CHANNEL RED MONITOR INPUTS IN ORDER FOR THE SIGNAL SEQUENCE MONITOR TO USE THE FULL SIGNAL SEQUENCE MONITORING CAPABILITY ON CHANNELS THAT DO NOT USE THE RED DISPLAY IN THE FIELD.

THIS ELECTRICAL DETAIL IS FOR
THE SIGNAL DESIGN: 12-0155
DESIGNED: 10/30/03
SEALED: 08/09/04
REVISED:

BACK-UP PROTECTION PROGRAMMING DETAIL

(program controller as shown below)

1. FROM MAIN MENU PRESS '2' (PHASE CONTROL), THEN '1' (PHASE CONTROL FUNCTIONS). SCROLL TO THE BOTTOM OF THE MENU AND ENABLE DYNAMIC/BACKUP CONTROL FUNCTION 1.
2. FROM PHASE CONTROL FUNCTIONS MENU PRESS '2' (DYNAMIC/BACKUP CONTROL FUNCTIONS).

```
DYNAMIC/BACKUP CONTROL FUNCTION #01
              OVERLAPS:¦ABCDEFGHIJKLMNOP
IF OVERLAPS ARE ACTIVE ¦
OR        PHASES:¦123456789101112131415 16
IF PHASES ARE ON¦     X
OMIT PHASES     ¦    X
CALL PHASES     ¦   X
```

BACKUP PROTECTION PROGRAMMING COMPLETE

SIGNAL UPGRADE - FINAL DESIGN - SHEET 1 OF 2

ELECTRICAL AND PROGRAMMING DETAILS FOR:

Prepared in the Offices of: Traffic Engineering and Safety Systems Branch, Signal Management Section, Division of Highways, State of North Carolina, Department of Transportation
122 N. McDowell St., Raleigh, NC 27603

NC 274 (BESSEMER CITY ROAD) AT SR 1338 (NORTHWEST BLVD.)

DIVISION 12 GASTON COUNTY GASTONIA

PLAN DATE: JULY 2004 REVIEWED BY: T Joyce
PREPARED BY: WILLIAM HAIRSTON REVIEWED BY:

REVISIONS	INIT.	DATE

SEAL
NORTH CAROLINA PROFESSIONAL SEAL 022013 ENGINEER GEORGE C. BROWN

George C. Brown 8/13/04
SIGNATURE DATE

SIG. INVENTORY NO. 12-0155

17-AUG-2004 07:13
s:\tjoyce\signal\2010ecl\2010ecl_2004xxxx.dgn
tjoyce

PROJECT REFERENCE NO.	SHEET NO.
U-2408	SIG.45

RAILROAD PREEMPTION PROGRAMMING DETAIL

(program controller as shown below)

FROM MAIN MENU PRESS 'A' (PREEMPTION), THEN '1' (STANDARD PREEMPTIONS).

```
   PREEMPTION  #1  SETTINGS (NEXT:1-10)
INTERVAL/TIMING ¦  CLEAR/DWELL PHASES
  GRN YEL  RED  ¦123456789101112131415 16
1  30  4.0  2.0 ¦   X
2 255  0.0  0.0 ¦ X   X
3   0  0.0  0.0 ¦
4   0  0.0  0.0 ¦
5   1  0.0  0.0 ¦   X
EXIT CALLS      ¦
              OPTIONS
PRIORITY (Y/N TO SELECT) ............HIGH
DELAY TIMER (0-255 SEC) .............0
MIN GREEN BEFORE PRE (0= DEFAULT)....1
PED CLEAR BEFORE PRE (0= DEFAULT)....0
YELLOW CLEAR BEFORE PRE (0= DEFAULT).4.7
RED CLEAR BEFORE PRE (0= DEFAULT)....2.0
DWELL MIN TIMER (0-255 SEC) .........10
DWELL MAX TIMER (0=OFF,1-255MIN) ....0
DWELL HOLD-OVER TIMER (0-255) .......0
LATCH CALL? .........................N
LINK TO NEXT PREEMPT? ...............N
ENABLE BACKUP PROTECTION? ...........N
HOLD CLEAR 1 PHASES DURING DELAY? ...N
FAST GREEN FLASH DWELL PHASES? ......N
PED CLEARANCE THROUGH YELLOW? .......N
INHIBIT OVERLAP GREEN EXTENSION? ....N
SERVICE DURING SOFTWARE FLASH? ......N
REST IN RED DURING DWELL INTERVAL? ..N
FLASH DWELL INTERVAL? ...............N
ALLOW PEDS IN DWELL INTERVAL? .......N
RE-TIME DWELL INTERVAL? .............N
OVERLAPS:                ¦ ABCDEFGHIJKLMNOP
DWELL INT FLASH YELLOW   ¦
OMIT OVERLAPS:           ¦ X
```

RAILROAD PREEMPTION WIRING DETAIL

(wire as shown below)

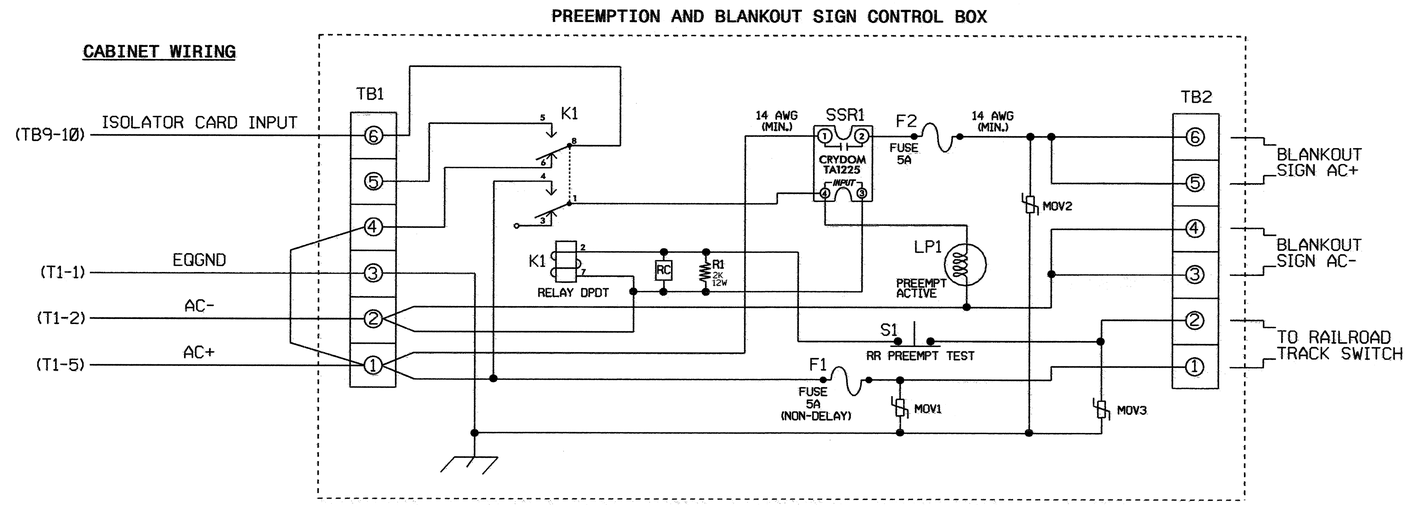

NOTES

1. RELAY K1 IS SHOWN IN THE ENERGIZED (PREEMPT NOT ACTIVE) NORMAL OPERATION STATE.
2. RELAY K1 IS A DPDT WITH 120VAC COIL. POTTER & BRUMFIELD KRP11AG WITH OCTAL BASE OR APPROVED EQUIVALENT.
3. RELAY SSR1 IS A SPST (NORMALLY OPEN) SOLID STATE RELAY WITH AC INPUT AND AC (25 AMP) OUTPUT. CRYDOM TA1225 OR APPROVED EQUIVALENT.
4. AC ISOLATOR CARD SHALL ACTIVATE PREEMPTION UPON REMOVAL OF AC+ FROM THE INPUT (AS SHOWN ABOVE).
5. RESISTOR IS VALUED AT 2K OHM, 12 WATT. CLAROSTAT PART NO. VPR10F-2K OR APPROVED EQUIVALENT.
6. RC NETWORK IS VALUED AT .1 MICROFARAD, 100 OHM.
7. IF REPLACEMENT MOVS ARE NEEDED, GE PART NO. V150LA20A MAY BE USED.
8. PREEMPTION AND BLANKOUT SIGN CONTROL BOX IS A CONTROL TECHNOLOGIES PART NO. 2299-101 OR APPROVED EQUIVALENT.
9. IMPORTANT!! A JUMPER MUST BE ADDED BETWEEN INPUT FILE TERMINALS J14-E AND J14-K IF NOT ALREADY PRESENT. ALSO, TERMINAL TB9-12 (ON INPUT PANEL) SHALL BE CONNECTED TO AC NEUTRAL (JUMPER MAY HAVE TO BE ADDED).

FRONT VIEW

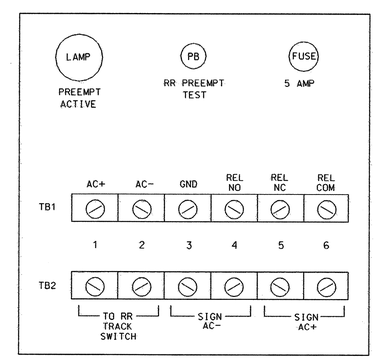

THIS ELECTRICAL DETAIL IS FOR
THE SIGNAL DESIGN: 12-0155
DESIGNED: 10/30/03
SEALED: 08/09/04
REVISED:

SIGNAL UPGRADE - FINAL DESIGN - SHEET 2 OF 2

ELECTRICAL AND PROGRAMMING DETAILS FOR:

Prepared in the Offices of:

Traffic Engineering and Safety Systems Branch
TRANSPORTATION MANAGEMENT ARCHITECT
STATE OF NORTH CAROLINA
DEPARTMENT OF TRANSPORTATION
Signals Management Section

122 N. McDowell St., Raleigh, NC 27603

NC 274 (BESSEMER CITY ROAD)
AT
SR 1338 (NORTHWEST BLVD.)

DIVISION 12 GASTON COUNTY GASTONIA

PLAN DATE: JULY 2004 REVIEWED BY: T. Joyce

PREPARED BY: WILLIAM HAIRSTON REVIEWED BY:

REVISIONS	INIT.	DATE

SEAL

NORTH CAROLINA PROFESSIONAL SEAL 022013 ENGINEER GEORGE C. BROWN

George C. Brown 8/13/04
SIGNATURE DATE

SIG. INVENTORY NO. 12-0155

10-AUG-2004 16:14
S:\MS_Gwym\tjoyce\U2408\120155_2004xxxxs.dgn
$$IDGN

METRIC	PROJECT REFERENCE NO.	SHEET NO.
	U-2408	SIG. 46

PHASING DIAGRAM

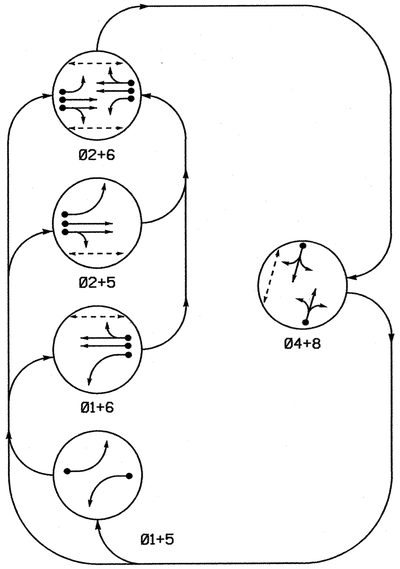

TABLE OF OPERATION

SIGNAL FACE	PHASE 01+5	01+6	02+5	02+6	04+8	FLASH
21	R	R	G	G	R	Y
22	R	R	G	G	R	Y
41,42	R	R	R	R	G	R
61	R	G	R	G	R	Y
62	R	G	R	G	R	Y
81,82	R	R	R	R	G	R
P21,P22	DW	DW	W	W	DW	DARK
P41,P42	DW	DW	DW	DW	W	DARK
P61,P62	DW	W	DW	W	DW	DARK

SIGNAL FACE I.D.

Denotes L.E.D.

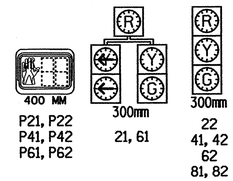

PLAN QUANTITIES

Pay Item	Meters
Signal Cable	580
Messenger Cable	0
Loop Lead-in Cable	900

5 PHASE
FULLY ACTUATED
GASTONIA CITY SIGNAL SYSTEM

NOTES

1. Refer to "Roadway Standard Drawings NCDOT" dated January 2002 and "Standard Specifications for Roads and Structures" dated January 2002.
2. Set all detector units to presence mode.
3. Omit Phase 1 during Phase 2 on.
4. Omit Phase 5 during Phase 6 on.
5. Program controller to clear from phase 2+6 to phase 1 and/or 5 by progressing through phase 4+8 (see Electrical Details).
6. Maximum times shown in timing chart are for free run operation only. Coordinated signal system timing values shall supercede these values.
7. System data: Controller Asset: 0264
8. Omit "WALK" and flashing "DON'T WALK" with no pedestrian calls.
9. Program pedestrian heads to countdown the flashing "Don't Walk" time only.
10. Do not program signal for late night flashing operation unless otherwise directed by the engineer.

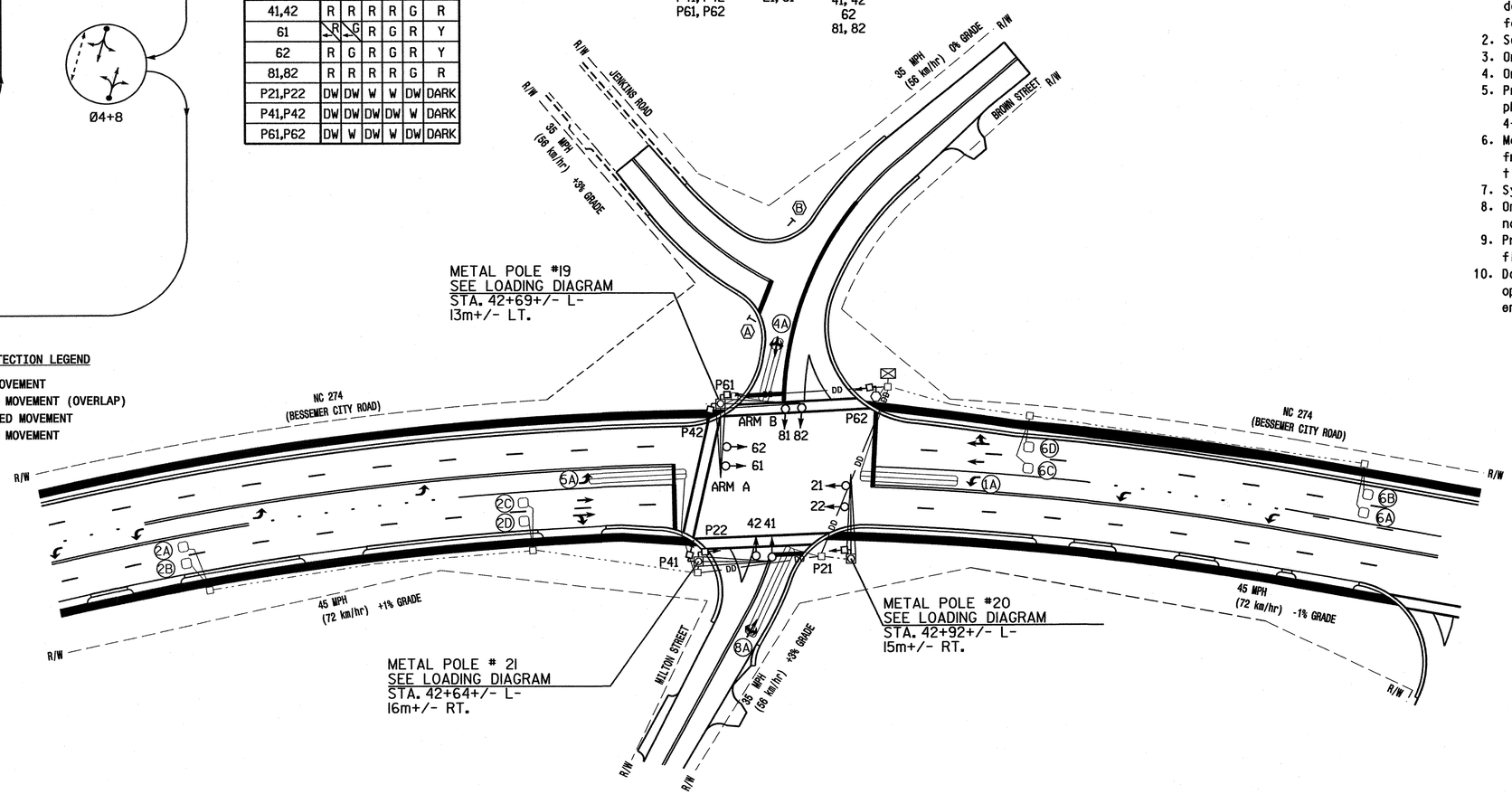

PHASING DIAGRAM DETECTION LEGEND

- DETECTED MOVEMENT
- UNDETECTED MOVEMENT (OVERLAP)
- UNSIGNALIZED MOVEMENT
- PEDESTRIAN MOVEMENT

LEGEND

PROPOSED		EXISTING
	Traffic Signal Head	
	Modified Signal Head	N/A
	Sign	
	Pedestrian Signal Head With Push Button & Sign	
	Signal Pole with Guy	
	Signal Pole with Sidewalk Guy	
	Pedestrian Signal Pedestal	
	Inductive Loop Detector	
	Controller & Cabinet	
	Junction Box	
	50mm Underground Conduit	
N/A	Right of Way with Marker	
	Directional Arrow	
	Pavement Marking Arrow	
	Metal Pole with Mast Arm	
A	"STOP" Sign (R1-1)	A
B	DO NOT BLOCK (Intersection Sign (R10-7)	B
	Directional Drill	
DD	2 - 50mm Polyethylene Conduit	N/A

2070L TIMING CHART

FEATURE	PHASE 1	2	4	5	6	8
Min Green 1 *	7	12	7	7	12	7
Extension 1 *	1.0	2.0	2.0	1.0	2.0	1.0
Max Green 1 *	15	45	20	15	45	20
Yellow Clearance	4.0	4.7	4.0	4.0	4.7	4.0
Red Clearance	2.0	1.5	2.0	2.0	1.5	2.0
Walk 1 *	-	5	5	-	5	-
Don't Walk 1	-	13	15	-	17	-
Seconds Per Actuation *	-	-	-	-	-	-
Max Variable Initial *	-	-	-	-	-	-
Time Before Reduction *	-	-	-	-	-	-
Time To Reduce *	-	-	-	-	-	-
Minimum Gap	-	-	-	-	-	-
Recall Mode	-	MIN RECALL	-	-	MIN RECALL	-
Vehicle Call Memory	-	YELLOW	-	-	YELLOW	-
Dual Entry	-	-	ON	-	-	ON
Simultaneous Gap	ON	ON	ON	ON	ON	ON

* These values may be field adjusted. Do not adjust Min Green and Extension times for phases 2 and 6 lower than what is shown. Min Green for all other phases should not be lower than 4 seconds.

2070L LOOP & DETECTOR INSTALLATION

INDUCTIVE LOOPS					DETECTOR PROGRAMMING							
LOOP	SIZE (m)	TURNS	DISTANCE FROM STOPBAR (m)	NEW LOOP	PHASE	CALLING	EXTENSION	FULL TIME DELAY	SYSTEM LOOP	STRETCH TIME	DELAY TIME	NEW CARD
1A	1.8 X 18	2-4-2	+2	Y	1	Y	Y	-	-	-	15	Y
					6	Y	Y	-	-	-	-	Y
2A,2B	1.8 X 1.8	5	90	Y	2	Y	Y	-	-	1.8	-	Y
2C,2D	1.8 X 1.8	4	27	Y	2	Y	Y	-	-	-	-	Y
4A	1.8 X 12	2-4-2	+1	Y	4	Y	Y	-	-	-	5	Y
5A	1.8 X 18	2-4-2	+2	Y	5	Y	Y	-	-	-	15	Y
					2	Y	Y	-	-	-	-	Y
6A,6B	1.8 X 1.8	4	90	Y	6	Y	Y	-	-	1.8	-	Y
6C,6D	1.8 X 1.8	4	27	Y	6	Y	Y	-	-	-	-	Y
8A	1.8 X 18	2-4-2	+1	Y	8	Y	Y	-	-	-	5	Y

THIS PLAN TO SUPERSEDE THE PLAN SEALED ON 8/9/04.

SIGNAL UPGRADE - FINAL DESIGN

N.C. 274 (BESSEMER CITY ROAD)
AT
BROWN ST. & MILTON ST.

DIVISION 12 GASTON COUNTY GASTONIA

PLAN DATE: OCT. 30,2003 REVIEWED BY: R.DUBNICKA,P.E.
PREPARED BY: RGL REVIEWED BY:

SCALE 5 0 10 1:500

REVISIONS	INIT.	DATE

SEAL

SIGNATURE DATE

SIG. INVENTORY NO. 12-0264

07-MAR-2006 09:22
s:\its signals\workgroups\tip projects\u-2408\signal plans\12064_sig_dsn_20040809.dgn
zmillie

PROJECT REFERENCE NO.	SHEET NO.
U-2408	SIG. 47

EDI MODEL 2010ECL CONFLICT MONITOR PROGRAMMING DETAIL

(remove jumpers and set switches as shown)

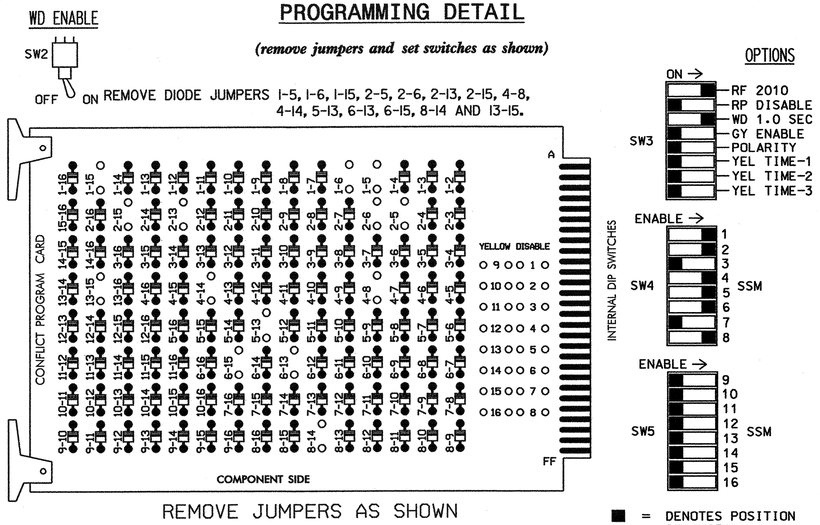

REMOVE JUMPERS AS SHOWN

■ = DENOTES POSITION OF SWITCH

NOTES:

1. CARD IS PROVIDED WITH ALL DIODE JUMPERS IN PLACE. REMOVAL OF ANY JUMPER ALLOWS ITS CHANNELS TO RUN CONCURRENTLY.
2. MAKE SURE JUMPERS SEL1-SEL5 ARE PRESENT ON THE MONITOR BOARD.

NOTES

1. TO PREVENT "FLASH-CONFLICT" PROBLEMS, INSERT RED FLASH PROGRAM BLOCKS FOR ALL UNUSED VEHICLE LOAD SWITCHES IN THE OUTPUT FILE. THE INSTALLER SHALL VERIFY THAT SIGNAL HEADS FLASH IN ACCORDANCE WITH THE SIGNAL PLANS.
2. ENSURE THAT RED ENABLE IS ACTIVE AT ALL TIMES DURING NORMAL OPERATION. TO PREVENT RED FAILURES ON UNUSED MONITOR CHANNELS, TIE UNUSED RED MONITOR INPUTS 3,7, 9,10,11,12,13,14,15 & 16 TO LOAD SWITCH AC+ PER THE CABINET MANUFACTURER'S INSTRUCTIONS.
3. PROGRAM CONTROLLER TO START UP IN PHASES 2 AND 6 GREEN.
4. ENABLE SIMULTANEOUS GAP-OUT FEATURE, ON CONTROLLER UNIT, FOR ALL PHASES.
5. PROGRAM PHASES 4 AND 8, ON CONTROLLER UNIT, FOR DUAL ENTRY.
6. PROGRAM PHASES 2, 4 AND 6 FOR 'STARTUP PED CALL'.
7. THE CABINET AND CONTROLLER ARE PART OF THE GASTONIA CITY SIGNAL SYSTEM.

EQUIPMENT INFORMATION

CONTROLLER.....CONTRACTOR SUPPLIED 2070L
CABINET .....CONTRACTOR SUPPLIED 332
SOFTWARE .....ECONOLITE OASIS
CABINET MOUNT.....BASE
OUTPUT FILE POSITIONS...12
LOAD SWITCHES USED.....S1,S2,S2P,S4,S4P,S5,S6,S6P,S8
PHASES USED.....1,2,4,5,6,8,2PED,4PED,6PED
OVERLAPS.....NONE

FIELD CONNECTION HOOK-UP CHART

LOAD SWITCH NO.	S1	S2	S2P	S3	S4	S4P	S5	S6	S6P	S7	S8	S8P
PHASE	1	2	2 PED	3	4	4 PED	5	6	6 PED	7	8	8 PED
SIGNAL HEAD NO.	61	21,22	P21, P22	NU	41,42	P41, P42	21	61,62	P61, P62	NU	81,82	NU
GREEN		130			103			136			109	
YELLOW		129			102			135			108	
RED	*	128			101		*	134			107	
RED ARROW												
YELLOW ARROW	126						132					
GREEN ARROW	127						133					
🚶			115			106			121			
✋			113			104			119			

NU = NOT USED

* DENOTES INSTALL LOAD RESISTOR. SEE LOAD RESISTOR INSTALLATION DETAIL THIS PAGE.

BACK-UP PROTECTION PROGRAMMING DETAIL

(program controller as shown below)

1. FROM MAIN MENU PRESS '2' (PHASE CONTROL), THEN '1' (PHASE CONTROL FUNCTIONS). SCROLL TO THE BOTTOM OF THE MENU AND ENABLE DYNAMIC/BACKUP CONTROL FUNCTIONS 1 AND 2.
2. FROM PHASE CONTROL FUNCTIONS MENU PRESS '2' (DYNAMIC/BACKUP CONTROL FUNCTIONS).

```
DYNAMIC/BACKUP CONTROL FUNCTION #01
              OVERLAPS:¦ABCDEFGHIJKLMNOP
IF OVERLAPS ARE ACTIVE ¦
OR        PHASES:¦123456789101112131415 16
IF PHASES ARE ON¦ X
OMIT PHASES     ¦X
CALL PHASES     ¦   X
```

PRESS 'NEXT'

```
DYNAMIC/BACKUP CONTROL FUNCTION #02
              OVERLAPS:¦ABCDEFGHIJKLMNOP
IF OVERLAPS ARE ACTIVE ¦
OR        PHASES:¦123456789101112131415 16
IF PHASES ARE ON¦     X
OMIT PHASES     ¦    X
CALL PHASES     ¦   X
```

BACKUP PROTECTION PROGRAMMING COMPLETE

INPUT FILE POSITION LAYOUT

(front view)

		1	2	3	4	5	6	7	8	9	10	11	12	13	14
FILE "I"	U	SLOT	Ø1	Ø2	SLOT	SLOT	Ø4	SLOT	SLOT	SLOT	SLOT	SLOT	Ø2 PED DC ISOLATOR	Ø6 PED DC ISOLATOR	FS DC ISOLATOR
			1A	2A,2B			4A								
	L	EMPTY	Ø6	Ø2	EMPTY	EMPTY	NOT USED	EMPTY	EMPTY	EMPTY	EMPTY	EMPTY	Ø4 PED DC ISOLATOR	NOT USED	ST DC ISOLATOR
			1A	2C,2D											
FILE "J"	U	SLOT	Ø5	Ø6	SLOT	SLOT	Ø8	SLOT	SLOT	SLOT	SLOT	SLOT	SLOT	SLOT	SLOT
			5A	6A,6B			8A								
	L	EMPTY	Ø2	Ø6	EMPTY	EMPTY	NOT USED	EMPTY	EMPTY	EMPTY	EMPTY	EMPTY	EMPTY	EMPTY	EMPTY
			5A	6C,6D											

EX.: 1A, 2A, ETC. = LOOP NO.'S

FS = FLASH SENSE
ST = STOP TIME

INPUT FILE CONNECTION & PROGRAMMING CHART

LOOP NO.	LOOP TERMINAL	INPUT FILE POS.	PIN NO.	INPUT ASSIGNMENT NO.	DETECTOR NO.	NEMA PHASE	CALL	EXTEND	FULL TIME DELAY	STRETCH TIME	DELAY TIME
1A[1]	TB2-5,6	I2U	39	1	2	1	Y	Y			15
	TB2-7,8	I2L	43	5	12	6	Y	Y			
2A,2B	TB2-9,10	I3U	63	25	32	2	Y	Y		1.8	
2C,2D	TB2-11,12	I3L	76	38	42	2	Y	Y			
4A	TB4-9,10	I6U	41	3	4	4	Y	Y			5
5A[2]	TB3-5,6	J2U	40	2	6	5	Y	Y			15
	TB3-7,8	J2L	44	6	16	2	Y	Y			
6A,6B	TB3-9,10	J3U	64	26	36	6	Y	Y		1.8	
6C,6D	TB3-11,12	J3L	77	39	46	6	Y	Y			
8A	TB5-9,10	J6U	42	4	8	8	Y	Y			5
PED PUSH BUTTONS											
P21,P22	TB8-4,6	I12U	67	29	PED 2	2 PED					
P41,P42	TB8-5,6	I12L	69	31	PED 4	4 PED					
P61,P62	TB8-7,9	I13U	68	30	PED 6	6 PED					

NOTE:
INSTALL DC ISOLATORS IN INPUT FILE SLOTS I12 AND I13.

[1] ADD JUMPERS FROM TB2-5 TO TB2-7, AND FROM TB2-6 TO TB2-8.

[2] ADD JUMPERS FROM TB3-5 TO TB3-7, AND FROM TB3-6 TO TB3-8.

INPUT FILE POSITION LEGEND: J2L
FILE J
SLOT 2
LOWER

LOAD RESISTOR INSTALLATION DETAIL

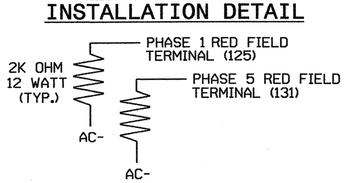

NOTE: THE PURPOSE OF THESE RESISTORS IS TO LOAD THE CHANNEL RED MONITOR INPUTS IN ORDER FOR THE SIGNAL SEQUENCE MONITOR TO USE THE FULL SIGNAL SEQUENCE MONITORING CAPABILITY ON CHANNELS THAT DO NOT USE THE RED DISPLAY IN THE FIELD.

THIS ELECTRICAL DETAIL IS FOR
THE SIGNAL DESIGN: 12-0264
DESIGNED: October 2003
SEALED: 3/07/06
REVISED: NA

COUNTDOWN PEDESTRIAN SIGNAL OPERATION

Countdown Ped Signals are required to display timing only during Ped Clearance Interval. Consult Ped Signal Module user's manual for instructions on selecting this feature.

THIS DETAIL SUPERSEDES DETAIL SEALED ON 3/21/05

SIGNAL UPGRADE

ELECTRICAL AND PROGRAMMING DETAILS FOR:

NC 274 (BESSEMER CITY ROAD)
AT
BROWN ST. & MILTON ST.

DIVISION 12 GASTON COUNTY GASTONIA

PLAN DATE:	MARCH 2006	REVIEWED BY:	T. Joyce
PREPARED BY:	PAUL MARAK	REVIEWED BY:	

REVISIONS	INIT.	DATE

Prepared in the Offices of:
Traffic Engineering and Safety Systems Branch
STATE OF NORTH CAROLINA DEPARTMENT OF TRANSPORTATION
Signals Management Section
122 N. McDowell St., Raleigh, NC 27603

SEAL
NORTH CAROLINA PROFESSIONAL SEAL 008453 ENGINEER JOHN T. ROWE, JR.
SIGNATURE DATE 2-28-06
SIG. INVENTORY NO. 12-0264

28-MAR-2006 13:31
u:\sig264_2006\2408ie.dgn
pmarak

METRIC	PROJECT REFERENCE NO.	SHEET NO.
	U-2408	SIG. 48

3 PHASE SEMI ACTUATED ISOLATED

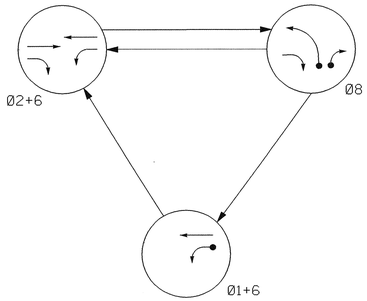

TABLE OF OPERATION

SIGNAL FACE	PHASE Ø1+6	Ø2+6	Ø8	FLASH
21	R	G	R	Y
22	R	G	R	Y
61	G	G	R	Y
62	G	G	R	Y
81,82	R	R	G	R

SIGNAL FACE I.D.

Denotes L.E.D.

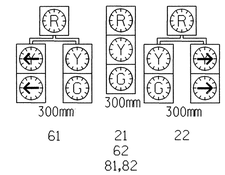

PLAN QUANTITIES

Pay Item	Meters
Signal Cable	190
Messenger Cable	85
Loop Lead-in Cable	20

NOTES

1. Refer to "Roadway Standard Drawings NCDOT" dated January 2002 and "Standard Specifications for Roads and Structures" dated January 2002.
2. Omit Phase 1 during Phase 2 on.
3. Program controller to clear from phase 2+6 to phase 1 by progressing through phase 8 (see Electrical Details).
4. Set all detector units to presence mode.
5. Do not program signal for late night flashing operation unless otherwise directed by the engineer.

PHASING DIAGRAM DETECTION LEGEND

- DETECTED MOVEMENT
- UNDETECTED MOVEMENT (OVERLAP)
- UNSIGNALIZED MOVEMENT
- PEDESTRIAN MOVEMENT

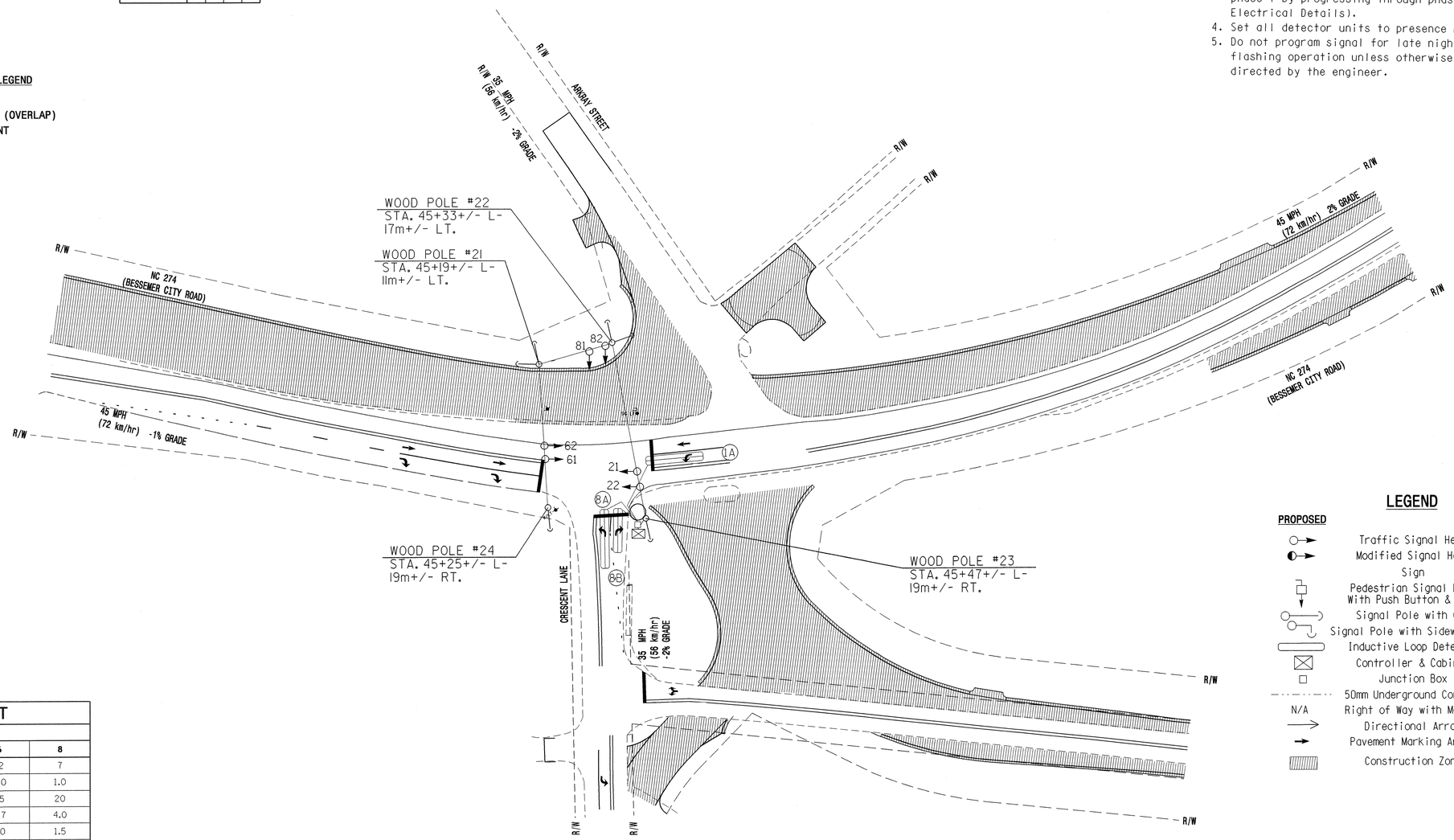

LEGEND

PROPOSED		EXISTING
	Traffic Signal Head	
	Modified Signal Head	N/A
	Sign	
	Pedestrian Signal Head With Push Button & Sign	
	Signal Pole with Guy	
	Signal Pole with Sidewalk Guy	
	Inductive Loop Detector	
	Controller & Cabinet	
	Junction Box	
	50mm Underground Conduit	
N/A	Right of Way with Marker	
	Directional Arrow	
	Pavement Marking Arrow	
	Construction Zone	

2070L TIMING CHART

FEATURE	PHASE 1	2	6	8
Min Green 1 *	7	12	12	7
Extension 1 *	1.0	0.0	0.0	1.0
Max Green 1 *	15	45	45	20
Yellow Clearance	4.0	4.7	4.7	4.0
Red Clearance	1.0	1.0	1.0	1.5
Walk 1 *	-	-	-	-
Don't Walk 1	-	-	-	-
Seconds Per Actuation *	-	-	-	-
Max Variable Initial *	-	-	-	-
Time Before Reduction *	-	-	-	-
Time To Reduce *	-	-	-	-
Minimum Gap	-	-	-	-
Recall Mode	-	MAX RECALL	MAX RECALL	-
Vehicle Call Memory	-	YELLOW	YELLOW	-
Dual Entry	-	-	-	-
Simultaneous Gap	ON	ON	ON	ON

* These values may be field adjusted. Do not adjust Min Green and Extension times for phases 2 and 6 lower than what is shown. Min Green for all other phases should not be lower than 4 seconds.

2070L LOOP & DETECTOR INSTALLATION

INDUCTIVE LOOPS					DETECTOR PROGRAMMING						
LOOP	SIZE (m)	TURNS	DISTANCE FROM STOPBAR (m)	NEW LOOP	PHASE	CALLING	EXTENSION	FULL TIME DELAY	SYSTEM LOOP	STRETCH TIME	DELAY TIME	NEW CARD
1A	1.8 X 12	2-4-2	+1	Y	1	Y	Y	-	-	-	15	Y
8A	1.8 X 12	2-4-2	+1	Y	8	Y	Y	-	-	-	3	Y
8B	1.8 X 9	2-4-2	+1	Y	8	Y	Y	-	-	-	15	Y

Prepared in the Office of:

THE LPA GROUP TRANSPORTATION CONSULTANTS

THE LPA GROUP of North Carolina, p.a.
4904 PROFESSIONAL COURT, SUITE 201
Raleigh, North Carolina 27609

SIGNAL UPGRADE - TEMPORARY DESIGN 1

Traffic Engineering and Safety Systems Branch
Signals and Geometrics Section
STATE OF NORTH CAROLINA DEPARTMENT OF TRANSPORTATION

N.C. 274 (BESSEMER CITY ROAD) AT CRESCENT LANE

DIVISION 12 GASTON COUNTY GASTONIA

PLAN DATE: OCT. 30, 2003 REVIEWED BY: R.DUBNICKA, P.E.

PREPARED BY: RGL REVIEWED BY:

SCALE 5 0 10 1:500

REVISIONS	INIT.	DATE

SEAL

NORTH CAROLINA PROFESSIONAL SEAL 027742 ENGINEER ROBERT J. DUBNICKA

Robert J. Dubnicka 8-9-04
SIGNATURE DATE

SIG. INVENTORY NO. 12-0636T1

09-AUG-2004 12:27
I:\Traffic\U2408\Signal Plans\SIG-8.dgn
rdubnicka

PROJECT REFERENCE NO.	SHEET NO.
U-2408	SIG. 49

EDI MODEL 2010ECL CONFLICT MONITOR PROGRAMMING DETAIL

(remove jumpers and set switches as shown)

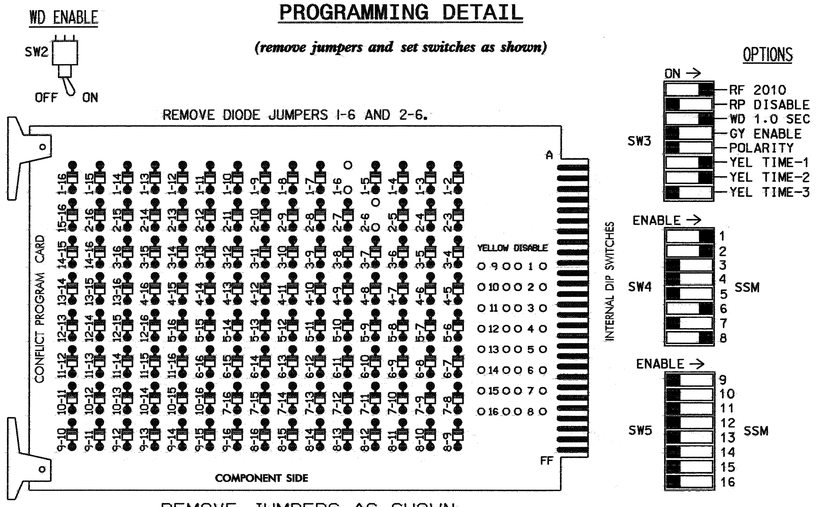

REMOVE JUMPERS AS SHOWN

NOTES:

1. CARD IS PROVIDED WITH ALL DIODE JUMPERS IN PLACE. REMOVAL OF ANY JUMPER ALLOWS ITS CHANNELS TO RUN CONCURRENTLY.
2. MAKE SURE JUMPERS SEL1-SEL5 ARE PRESENT ON THE MONITOR BOARD.

NOTES

1. TO PREVENT "FLASH-CONFLICT" PROBLEMS, INSERT RED FLASH PROGRAM BLOCKS FOR ALL UNUSED VEHICLE LOAD SWITCHES IN THE OUTPUT FILE. THE INSTALLER SHALL VERIFY THAT SIGNAL HEADS FLASH IN ACCORDANCE WITH THE SIGNAL PLANS.
2. ENSURE THAT RED ENABLE IS ACTIVE AT ALL TIMES DURING NORMAL OPERATION. TO PREVENT RED FAILURES ON UNUSED MONITOR CHANNELS, TIE UNUSED RED MONITOR INPUTS 3,4,5, 7,9,10,11,12,13,14,15 & 16 TO LOAD SWITCH AC+ PER THE CABINET MANUFACTURER'S INSTRUCTIONS.
3. PROGRAM CONTROLLER TO START UP IN PHASES 2 AND 6 GREEN.
4. ENABLE SIMULTANEOUS GAP-OUT FEATURE, ON CONTROLLER UNIT, FOR ALL PHASES.

EQUIPMENT INFORMATION

CONTROLLER.....CONTRACTOR SUPPLIED 2070L
CABINET .....CONTRACTOR SUPPLIED 332
SOFTWARE .....ECONOLITE OASIS
CABINET MOUNT.....BASE
OUTPUT FILE POSITIONS...12
LOAD SWITCHES USED.....S1,S2,S6,S8
PHASES USED.....1,2,6,8
OVERLAPS.....NONE

FIELD CONNECTION HOOK-UP CHART

LOAD SWITCH NO.	S1	S2	S2P	S3	S4	S4P	S5	S6	S6P	S7	S8		S8P
PHASE	1	2	2 PED	3	4	4 PED	5	6	6 PED	7	8		8 PED
SIGNAL HEAD NO.	61	21,22	NU	NU	NU	NU	NU	61,62	NU	NU	22	81,82	NU
GREEN		130						136				109	
YELLOW		129						135				108	
RED	*	128						134				107	
RED ARROW													
YELLOW ARROW	126										108		
GREEN ARROW	127										109		
🚶													
✋													

NU = NOT USED

* DENOTES INSTALL LOAD RESISTOR. SEE LOAD RESISTOR INSTALLATION DETAIL THIS PAGE.

BACK-UP PROTECTION PROGRAMMING DETAIL

(program controller as shown below)

1. FROM MAIN MENU PRESS '2' (PHASE CONTROL), THEN '1' (PHASE CONTROL FUNCTIONS). SCROLL TO THE BOTTOM OF THE MENU AND ENABLE DYNAMIC/BACKUP CONTROL FUNCTION 1.
2. FROM PHASE CONTROL FUNCTIONS MENU PRESS '2' (DYNAMIC/BACKUP CONTROL FUNCTIONS).

```
DYNAMIC/BACKUP CONTROL FUNCTION #01
                OVERLAPS:¦ABCDEFGHIJKLMNOP
IF OVERLAPS ARE ACTIVE ¦
OR        PHASES:¦123456789101112131415 16
IF PHASES ARE ON¦ X
OMIT PHASES     ¦X
CALL PHASES     ¦       X
```

BACKUP PROTECTION PROGRAMMING COMPLETE

INPUT FILE POSITION LAYOUT

(front view)

		1	2	3	4	5	6	7	8	9	10	11	12	13	14
FILE "I"	U	SLOT	Ø1 1A	SLOT	SLOT	SLOT	SLOT	SLOT	SLOT	SLOT	SLOT	SLOT	SLOT	SLOT	FS DC ISOLATOR
	L	EMPTY	NOT USED	EMPTY	EMPTY	EMPTY	EMPTY	EMPTY	EMPTY	EMPTY	EMPTY	EMPTY	EMPTY	EMPTY	ST DC ISOLATOR
FILE "J"	U	SLOT	SLOT	SLOT	SLOT	SLOT	Ø8 8A	SLOT	SLOT	SLOT	SLOT	SLOT	SLOT	SLOT	SLOT
	L	EMPTY	EMPTY	EMPTY	EMPTY	EMPTY	Ø8 8B	EMPTY	EMPTY	EMPTY	EMPTY	EMPTY	EMPTY	EMPTY	EMPTY

EX.: 1A, 2A, ETC. = LOOP NO.'S

FS = FLASH SENSE
ST = STOP TIME

INPUT FILE CONNECTION & PROGRAMMING CHART

LOOP NO.	LOOP TERMINAL	INPUT FILE POS.	PIN NO.	INPUT ASSIGNMENT NO.	DETECTOR NO.	NEMA PHASE	CALL	EXTEND	FULL TIME DELAY	STRETCH TIME	DELAY TIME
1A	TB2-5,6	I2U	39	1	2	1	Y	Y			15
8A	TB5-9,10	J6U	42	4	8	8	Y	Y			3
8B	TB5-11,12	J6L	46	8	18	8	Y	Y			15

INPUT FILE POSITION LEGEND: J2L
FILE J
SLOT 2
LOWER

LOAD RESISTOR INSTALLATION DETAIL

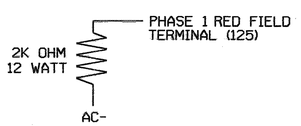

NOTE: THE PURPOSE OF THIS RESISTOR IS TO LOAD THE CHANNEL RED MONITOR INPUT IN ORDER FOR THE SIGNAL SEQUENCE MONITOR TO USE THE FULL SIGNAL SEQUENCE MONITORING CAPABILITY ON CHANNELS THAT DO NOT USE THE RED DISPLAY IN THE FIELD.

THIS ELECTRICAL DETAIL IS FOR
THE SIGNAL DESIGN: 12-0636T1
DESIGNED: 10/30/03
SEALED: 08/09/04
REVISED:

SIGNAL UPGRADE - TEMPORARY DESIGN 1

ELECTRICAL AND PROGRAMMING DETAILS FOR:

NC 274 (BESSEMER CITY ROAD)
AT
CRESCENT LANE

DIVISION 12 GASTON COUNTY GASTONIA

PLAN DATE: JULY 2004 REVIEWED BY: T Joyce
PREPARED BY: WILLIAM HAIRSTON REVIEWED BY:

REVISIONS	INIT.	DATE

Prepared in the Offices of:
Traffic Engineering and Safety Systems Branch
Division of Highways
Department of Transportation
Statewide Management Section
122 N. McDowell St., Raleigh, NC 27603

SEAL
NORTH CAROLINA PROFESSIONAL SEAL 022013 ENGINEER GEORGE C. BROWN

George C. Brown 8/11/04
SIGNATURE DATE

SIG. INVENTORY NO. 12-0636T1

10-AUG-2004 16:22
S:\HS\pdgm\TJoyce\U2408\12O636_2004xxxa.dgn
$$$$opts

METRIC	PROJECT REFERENCE NO.	SHEET NO.
	U-2408	SIG. 5D

6 PHASE SEMI ACTUATED ISOLATED

PHASING DIAGRAM

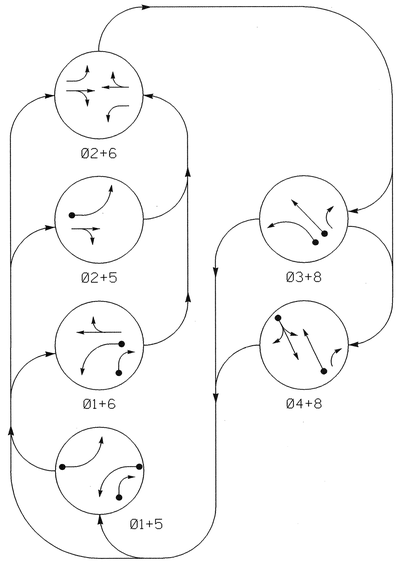

TABLE OF OPERATION

SIGNAL FACE	PHASE 01+5	01+6	02+5	02+6	03+8	04+8	FLASH
21	←R	R	←G	G	R	R	Y
22	R	R	G	G	R	R	Y
31	~~R~~	~~R~~	~~R~~	~~R~~	←	~~R~~	~~R~~
41,42	R	R	R	R	R	G	R
61	←R	←G	R	G	R	R	Y
62	R	G	R	G	R	R	Y
81,83	R	R	R	R	G	G	R
82	R→	R→	R	R	G	G	R

PLAN QUANTITIES

Pay Item	Meters
Signal Cable	340
Messenger Cable	135
Loop Lead-in Cable	560

SIGNAL FACE I.D.

Denotes L.E.D.

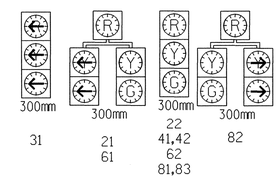

NOTES

1. Refer to "Roadway Standard Drawings NCDOT" dated January 2002 and "Standard Specifications for Roads and Structures" dated January 2002.
2. Set all detector units to presence mode.
3. Omit Phase 1 during Phase 2 on.
4. Omit Phase 3 during Phase 4 on.
5. Omit Phase 5 during Phase 6 on.
6. Program controller to clear from phase 2+6 to phase 1 and/or 5 by progressing through phase 4+8 (see Electrical Details)
7. Do not program signal for late night flashing operation unless otherwise directed by the engineer.

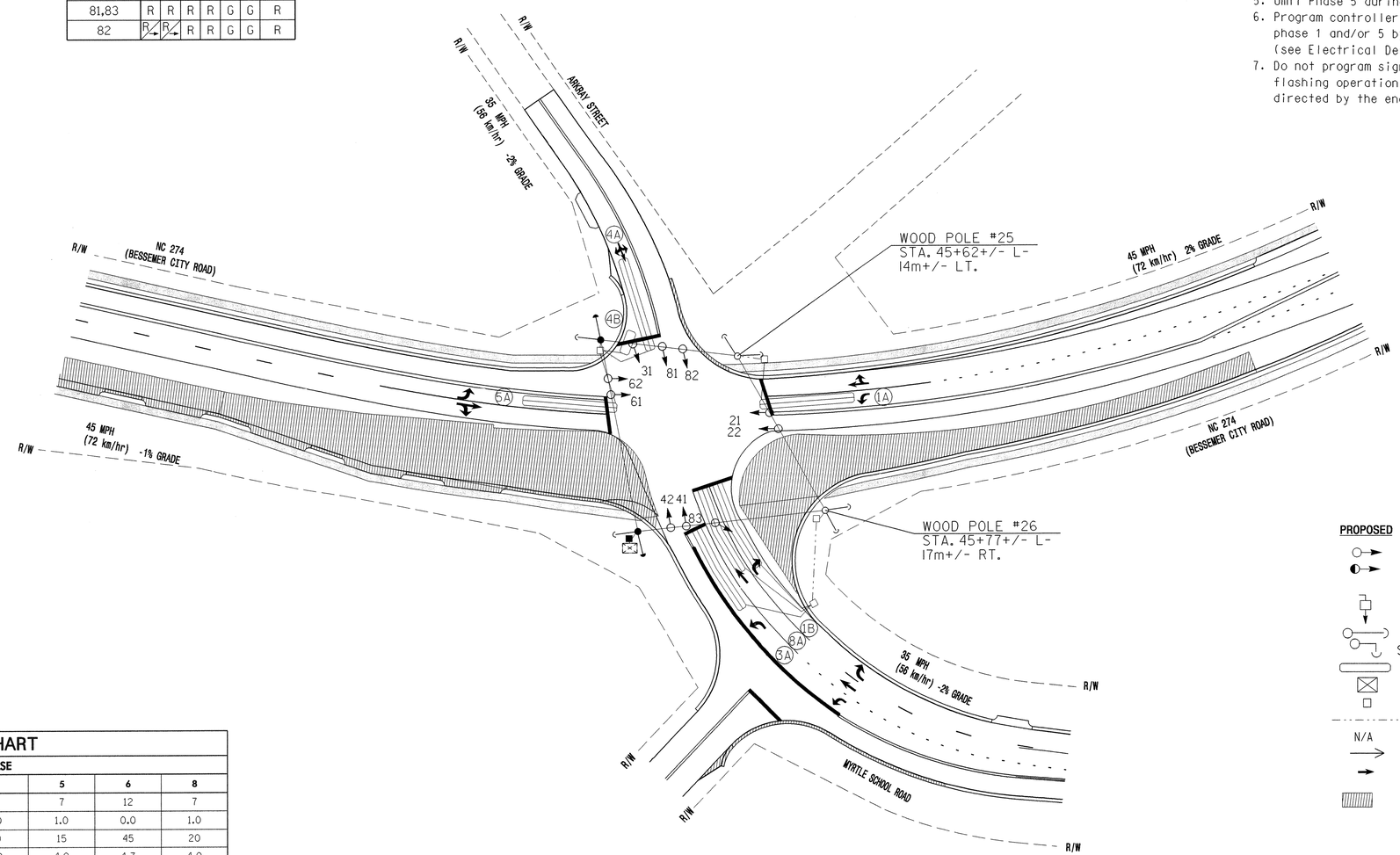

LEGEND

PROPOSED		EXISTING
	Traffic Signal Head	
	Modified Signal Head	N/A
	Sign	
	Pedestrian Signal Head With Push Button & Sign	
	Signal Pole with Guy	
	Signal Pole with Sidewalk Guy	
	Inductive Loop Detector	
	Controller & Cabinet	
	Junction Box	
	50mm Underground Conduit	
N/A	Right of Way with Marker	
	Directional Arrow	
	Pavement Marking Arrow	
	Construction Zone	

PHASING DIAGRAM DETECTION LEGEND

- DETECTED MOVEMENT
- UNDETECTED MOVEMENT (OVERLAP)
- UNSIGNALIZED MOVEMENT
- PEDESTRIAN MOVEMENT

2070L TIMING CHART

FEATURE	PHASE 1	2	3	4	5	6	8
Min Green 1 *	7	12	7	7	7	12	7
Extension 1 *	1.0	0.0	1.0	1.0	1.0	0.0	1.0
Max Green 1 *	15	45	15	20	15	45	20
Yellow Clearance	4.0	4.7	4.0	4.0	4.0	4.7	4.0
Red Clearance	2.0	1.5	3.0	2.0	2.0	1.5	2.0
Walk 1 *	-	-	-	-	-	-	-
Don't Walk 1	-	-	-	-	-	-	-
Seconds Per Actuation *	-	-	-	-	-	-	-
Max Variable Initial *	-	-	-	-	-	-	-
Time Before Reduction *	-	-	-	-	-	-	-
Time To Reduce *	-	-	-	-	-	-	-
Minimum Gap	-	-	-	-	-	-	-
Recall Mode	-	MAX RECALL	-	-	-	MAX RECALL	-
Vehicle Call Memory	-	YELLOW	-	-	-	YELLOW	-
Dual Entry	-	-	-	-	-	-	ON
Simultaneous Gap	ON	ON	ON	ON	ON	ON	ON

* These values may be field adjusted. Do not adjust Min Green and Extension times for phases 2 and 6 lower than what is shown. Min Green for all other phases should not be lower than 4 seconds.

2070L LOOP & DETECTOR INSTALLATION

INDUCTIVE LOOPS					DETECTOR PROGRAMMING							
LOOP	SIZE (m)	TURNS	DISTANCE FROM STOPBAR (m)	NEW LOOP	PHASE	CALLING	EXTENSION	FULL TIME DELAY	SYSTEM LOOP	STRETCH TIME	DELAY TIME	NEW CARD
1A	1.8 X 18	2-4-2	+2	Y	1	Y	Y	-	-	-	15	-
1B	1.8 X 18	2-4-2	0	Y	1	Y	Y	-	-	-	15	Y
3A	1.8 X 18	4	0	Y	3	Y	Y	-	-	-	3	-
4A	1.8 X 18	2-4-2	+2	Y	4	Y	Y	-	-	-	5	Y
4B	1.8 X 4.5	4	+2	Y	4	Y	Y	-	-	-	10	Y
5A	1.8 X 18	2-4-2	+2	Y	5	Y	Y	-	-	-	15	Y
8A	1.8 X 18	2-4-2	0	Y	8	Y	Y	-	-	-	-	-

Prepared in the Office of:

THE LPA GROUP TRANSPORTATION CONSULTANTS

THE LPA GROUP of North Carolina, p.a.
4904 PROFESSIONAL COURT, SUITE 201
Raleigh, North Carolina 27609

SIGNAL UPGRADE - TEMPORARY DESIGN 2

Traffic Engineering and Safety Systems Branch — Signals and Geometric Section — STATE OF NORTH CAROLINA DEPARTMENT OF TRANSPORTATION

N.C. 274 (BESSEMER CITY ROAD) AT ARKRAY ST. & MYRTLE SCHOOL ROAD

DIVISION 12 GASTON COUNTY GASTONIA

PLAN DATE: OCT. 30,2003 REVIEWED BY: R.DUBNICKA,P.E.

PREPARED BY: RGL REVIEWED BY:

SCALE 5 0 10 1:500

REVISIONS	INIT.	DATE

SEAL: NORTH CAROLINA PROFESSIONAL SEAL 027742 ENGINEER ROBERT J. DUBNICKA

SIGNATURE DATE 8-9-04

SIG. INVENTORY NO. 12-0636T2

09-AUG-2004 12:27
Y:\traffic\MU2408\Signal Plans\SIG-8A.dgn
rdubnicka

PROJECT REFERENCE NO.	SHEET NO.
U-2408	SIG. 51

EDI MODEL 2010ECL CONFLICT MONITOR PROGRAMMING DETAIL

(remove jumpers and set switches as shown)

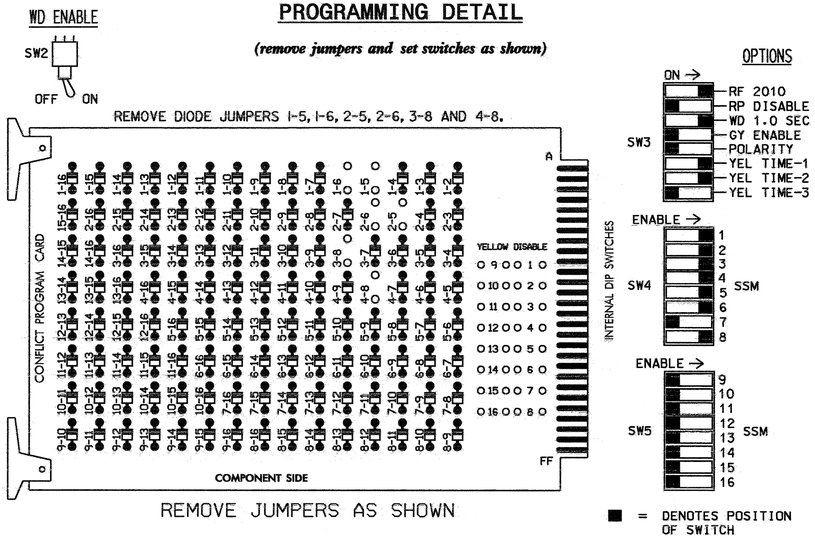

NOTES:

1. CARD IS PROVIDED WITH ALL DIODE JUMPERS IN PLACE. REMOVAL OF ANY JUMPER ALLOWS ITS CHANNELS TO RUN CONCURRENTLY.
2. MAKE SURE JUMPERS SEL1-SEL5 ARE PRESENT ON THE MONITOR BOARD.

NOTES

1. TO PREVENT "FLASH-CONFLICT" PROBLEMS, INSERT RED FLASH PROGRAM BLOCKS FOR ALL UNUSED VEHICLE LOAD SWITCHES IN THE OUTPUT FILE. THE INSTALLER SHALL VERIFY THAT SIGNAL HEADS FLASH IN ACCORDANCE WITH THE SIGNAL PLANS.
2. ENSURE THAT RED ENABLE IS ACTIVE AT ALL TIMES DURING NORMAL OPERATION. TO PREVENT RED FAILURES ON UNUSED MONITOR CHANNELS, TIE UNUSED RED MONITOR INPUTS 7,9,10, 11,12,13,14,15 & 16 TO LOAD SWITCH AC+ PER THE CABINET MANUFACTURER'S INSTRUCTIONS.
3. PROGRAM CONTROLLER TO START UP IN PHASES 2 AND 6 GREEN.
4. ENABLE SIMULTANEOUS GAP-OUT FEATURE, ON CONTROLLER UNIT, FOR ALL PHASES.
5. PROGRAM PHASE 8, ON CONTROLLER UNIT, FOR DUAL ENTRY.

EQUIPMENT INFORMATION

CONTROLLER.....CONTRACTOR SUPPLIED 2070L
CABINET .....CONTRACTOR SUPPLIED 332
SOFTWARE .....ECONOLITE OASIS
CABINET MOUNT.....BASE
OUTPUT FILE POSITIONS...12
LOAD SWITCHES USED.....S1,S2,S3,S4,S5,S6,S8
PHASES USED.....1,2,3,4,5,6,8
OVERLAPS.....NONE

FIELD CONNECTION HOOK-UP CHART

LOAD SWITCH NO.	S1	S2	S2P	S3	S4	S4P	S5	S6	S6P	S7	S8	S8P
PHASE	1	2	2 PED	3	4	4 PED	5	6	6 PED	7	8	8 PED
SIGNAL HEAD NO.	61,82	21,22	NU	31	41,42	NU	21	61,62	NU	NU	81,82	NU
GREEN		130			103			136			109	
YELLOW		129			102			135			108	
RED	*	128			101		*	134			107	
RED ARROW				116								
YELLOW ARROW	126			117			132					
GREEN ARROW	127			118			133					
🚶												
✋												

NU = NOT USED

* DENOTES INSTALL LOAD RESISTOR. SEE LOAD RESISTOR INSTALLATION DETAIL THIS PAGE.

BACK-UP PROTECTION PROGRAMMING DETAIL

(program controller as shown below)

1. FROM MAIN MENU PRESS '2' (PHASE CONTROL), THEN '1' (PHASE CONTROL FUNCTIONS). SCROLL TO THE BOTTOM OF THE MENU AND ENABLE DYNAMIC/BACKUP CONTROL FUNCTIONS 1,2 AND 3.
2. FROM PHASE CONTROL FUNCTIONS MENU PRESS '2' (DYNAMIC/BACKUP CONTROL FUNCTIONS).

```
DYNAMIC/BACKUP CONTROL FUNCTION #01
                 OVERLAPS:¦ABCDEFGHIJKLMNOP
IF OVERLAPS ARE ACTIVE ¦
OR        PHASES:¦123456789101112131415 16
IF PHASES ARE ON¦ X
OMIT PHASES     ¦X
CALL PHASES     ¦   X
```

PRESS 'NEXT'

```
DYNAMIC/BACKUP CONTROL FUNCTION #02
                 OVERLAPS:¦ABCDEFGHIJKLMNOP
IF OVERLAPS ARE ACTIVE ¦
OR        PHASES:¦123456789101112131415 16
IF PHASES ARE ON¦   X
OMIT PHASES     ¦  X
CALL PHASES     ¦
```

PRESS 'NEXT'

```
DYNAMIC/BACKUP CONTROL FUNCTION #03
                 OVERLAPS:¦ABCDEFGHIJKLMNOP
IF OVERLAPS ARE ACTIVE ¦
OR        PHASES:¦123456789101112131415 16
IF PHASES ARE ON¦     X
OMIT PHASES     ¦    X
CALL PHASES     ¦   X
```

BACKUP PROTECTION PROGRAMMING COMPLETE

INPUT FILE POSITION LAYOUT

(front view)

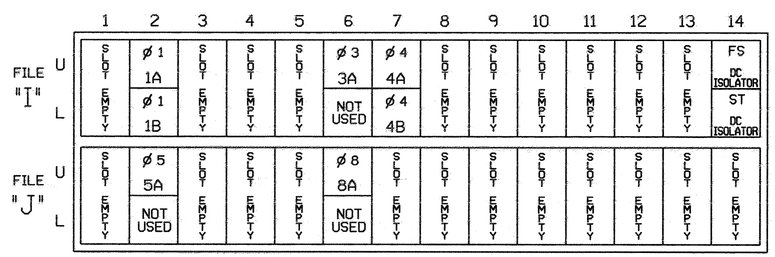

EX.: 1A, 2A, ETC. = LOOP NO.'S

FS = FLASH SENSE
ST = STOP TIME

INPUT FILE CONNECTION & PROGRAMMING CHART

LOOP NO.	LOOP TERMINAL	INPUT FILE POS.	PIN NO.	INPUT ASSIGNMENT NO.	DETECTOR NO.	NEMA PHASE	CALL	EXTEND	FULL TIME DELAY	STRETCH TIME	DELAY TIME
1A	TB2-5,6	I2U	39	1	2	1	Y	Y			15
1B	TB2-7,8	I2L	43	5	12	1	Y	Y			15
3A	TB4-9,10	I6U	41	3	4	3	Y	Y			3
4A	TB6-1,2	I7U	65	27	34	4	Y	Y			5
4B	TB6-3,4	I7L	78	40	44	4	Y	Y			10
5A	TB3-5,6	J2U	40	2	6	5	Y	Y			15
8A	TB5-9,10	J6U	42	4	8	8	Y	Y			

INPUT FILE POSITION LEGEND: J2L
FILE J
SLOT 2
LOWER

LOAD RESISTOR INSTALLATION DETAIL

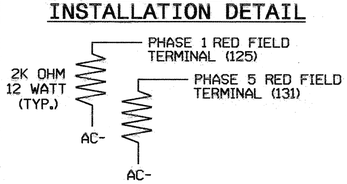

NOTE: THE PURPOSE OF THESE RESISTORS IS TO LOAD THE CHANNEL RED MONITOR INPUTS IN ORDER FOR THE SIGNAL SEQUENCE MONITOR TO USE THE FULL SIGNAL SEQUENCE MONITORING CAPABILITY ON CHANNELS THAT DO NOT USE THE RED DISPLAY IN THE FIELD.

THIS ELECTRICAL DETAIL IS FOR THE SIGNAL DESIGN: 12-0636T2
DESIGNED: 10/30/03
SEALED: 08/09/04
REVISED:

SIGNAL UPGRADE - TEMPORARY DESIGN 2

ELECTRICAL AND PROGRAMMING DETAILS FOR:

Prepared in the Offices of:
Traffic Engineering and Safety Systems Branch
STATE OF NORTH CAROLINA DEPARTMENT OF TRANSPORTATION
Signal Management Section
122 N. McDowell St., Raleigh, NC 27603

NC 274 (BESSEMER CITY ROAD) AT ARKRAY ST. & MYRTLE SCHOOL ROAD

DIVISION 12 | GASTON COUNTY | GASTONIA

PLAN DATE: JULY 2004 | REVIEWED BY: T Jag
PREPARED BY: WILLIAM HAIRSTON | REVIEWED BY:

REVISIONS	INIT.	DATE

SEAL
NORTH CAROLINA PROFESSIONAL SEAL 022013 ENGINEER GEORGE C. BROWN
George C. Brown 8/11/04
SIGNATURE DATE

SIG. INVENTORY NO. 12-0636T2

11-AUG-2004 09:00
S:\Sig\Mgmt\Joyce\U2408\20636_2004xxxxe.dgn
Joyce

METRIC	PROJECT REFERENCE NO.	SHEET NO.
	U-2408	SIG. 52

6 PHASE
FULLY ACTUATED
GASTONIA CITY SIGNAL SYSTEM

PHASING DIAGRAM

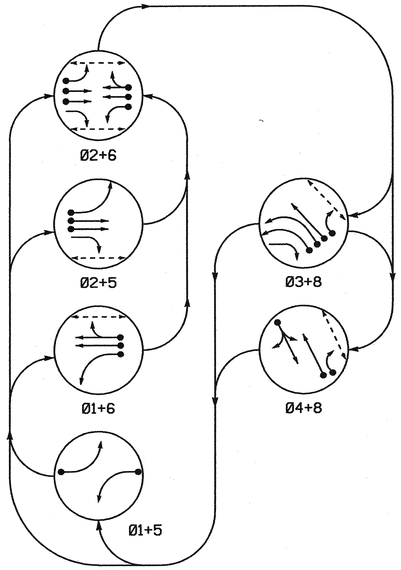

TABLE OF OPERATION

SIGNAL FACE	PHASE 01+5	01+6	02+5	02+6	03+8	04+8	FLASH
21	↘R	R	↘G	G	R	R	Y
22	R	R	G	G	R	R	Y
23	R	R	G	G	R↘	R	Y
31,32	~~R~~	~~R~~	~~R~~	~~R~~	~~←~~	~~R~~	~~R~~
41,42	R	R	R	R	R	G	R
61	↘R	↘G	R	G	R	R	Y
62	R	G	R	G	R	R	Y
81,82,83	R	R	R	R	G	G	R
P21,22	DW	DW	W	W	DW	DW	DARK
P61,62	DW	W	DW	W	DW	DW	DARK
P81,82	DW	DW	DW	DW	W	W	DARK

SIGNAL FACE I.D.

Denotes L.E.D.

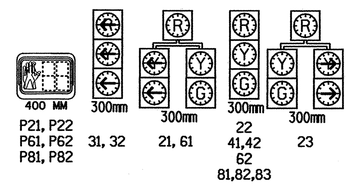

PLAN QUANTITIES

Pay Item	Meters
Signal Cable	660
Messenger Cable	0
Loop Lead-in Cable	1240

NOTES

1. Refer to "Roadway Standard Drawings NCDOT" dated January 2002 and "Standard Specifications for Roads and Structures" dated January 2002.
2. Set all detector units to presence mode.
3. Omit Phase 1 during Phase 2 on.
4. Omit Phase 3 during Phase 4 on.
5. Omit Phase 5 during Phase 6 on.
6. Program controller to clear from phase 2+6 to phase 1 and/or 5 by progressing through phase 4+8 (see Electrical Details).
7. Maximum times shown in timing chart are for free run operation only. Coordinated signal system timing values shall supersede these volumes.
8. System data: Controller Asset: 0636
9. Omit "WALK" and flashing "DON'T WALK" with no pedestrian calls.
10. Program pedestrian heads to countdown the flashing "Don't Walk" time only.
11. Do not program signal for late night flashing operation unless otherwise directed by the engineer.

PHASING DIAGRAM DETECTION LEGEND

- DETECTED MOVEMENT
- UNDETECTED MOVEMENT (OVERLAP)
- UNSIGNALIZED MOVEMENT
- PEDESTRIAN MOVEMENT

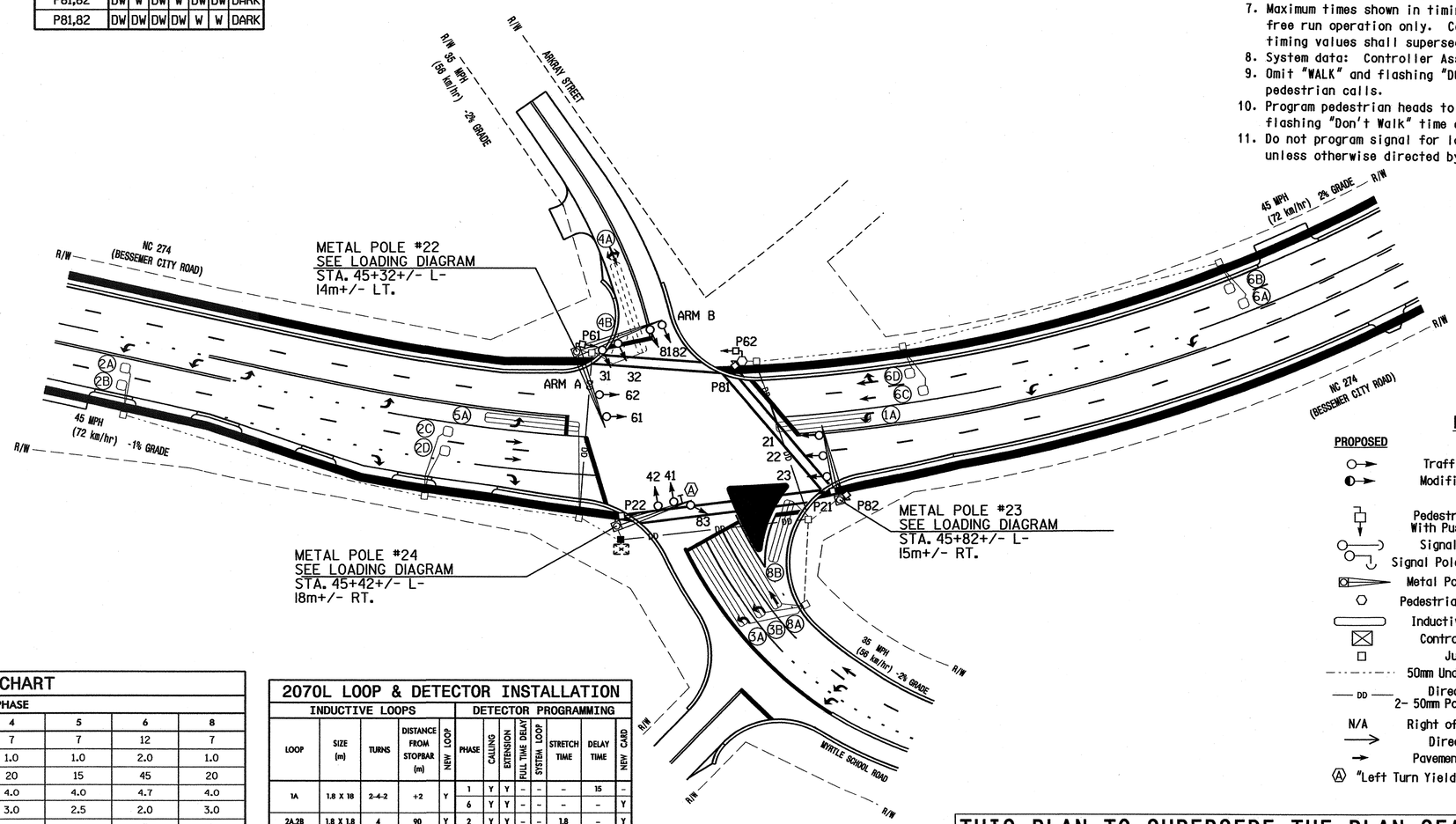

LEGEND

PROPOSED		EXISTING
	Traffic Signal Head	
	Modified Signal Head	N/A
	Sign	
	Pedestrian Signal Head With Push Button & Sign	
	Signal Pole with Guy	
	Signal Pole with Sidewalk Guy	
	Metal Pole with Mast Arm	
	Pedestrian Signal Pedestal	
	Inductive Loop Detector	
	Controller & Cabinet	
	Junction Box	
	50mm Underground Conduit	
DD	Directional Drill 2- 50mm Polyethylene Conduit	DD
N/A	Right of Way with Marker	
	Directional Arrow	
	Pavement Marking Arrow	
Ⓐ	"Left Turn Yield on Green" Sign (R10-12)	Ⓐ

2070L TIMING CHART

FEATURE	PHASE 1	2	3	4	5	6	8
Min Green 1 *	7	12	7	7	7	12	7
Extension 1 *	1.0	2.0	1.0	1.0	1.0	2.0	1.0
Max Green 1 *	15	45	15	20	15	45	20
Yellow Clearance	4.0	4.7	4.5	4.0	4.0	4.7	4.0
Red Clearance	2.5	2.0	3.0	3.0	2.5	2.0	3.0
Walk 1 *	-	5	-	-	-	5	5
Don't Walk 1	-	24	-	-	-	13	19
Seconds Per Actuation *	-	-	-	-	-	-	-
Max Variable Initial *	-	-	-	-	-	-	-
Time Before Reduction *	-	-	-	-	-	-	-
Time To Reduce *	-	-	-	-	-	-	-
Minimum Gap	-	-	-	-	-	-	-
Recall Mode	-	MIN RECALL	-	-	-	MIN RECALL	-
Vehicle Call Memory	-	YELLOW	-	-	-	YELLOW	-
Dual Entry	-	-	-	-	-	-	ON
Simultaneous Gap	ON	ON	ON	ON	ON	ON	ON

* These values may be field adjusted. Do not adjust Min Green and Extension times for phases 2 and 6 lower than what is shown. Min Green for all other phases should not be lower than 4 seconds.

2070L LOOP & DETECTOR INSTALLATION

INDUCTIVE LOOPS					DETECTOR PROGRAMMING						
LOOP	SIZE (m)	TURNS	DISTANCE FROM STOPBAR (m)	NEW LOOP	PHASE	CALLING	EXTENSION	FULL TIME DELAY	SYSTEM LOOP	STRETCH TIME	DELAY TIME	NEW CARD
1A	1.8 X 18	2-4-2	+2	Y	1	Y	Y	-	-	-	15	-
					6	Y	Y	-	-	-	-	Y
2A,2B	1.8 X 1.8	4	90	Y	2	Y	Y	-	-	1.8	-	Y
2C,2D	1.8 X 1.8	4	27	Y	2	Y	Y	-	-	-	-	Y
3A	1.8 X 18	4	0	Y	3	Y	Y	-	-	-	3	-
3B	1.8 X 18	4	0	Y	3	Y	Y	-	-	-	3	Y
4A	1.8 X 18	2-4-2	+2	-	4	Y	Y	-	-	-	5	-
4B	1.8 X 4.5	4	+2	-	4	Y	Y	-	-	-	10	-
5A	1.8 X 18	2-4-2	+2	Y	5	Y	Y	-	-	-	15	-
					2	Y	Y	-	-	-	-	Y
6A,6B	1.8 X 1.8	4	90	Y	6	Y	Y	-	-	1.8	-	Y
6C,6D	1.8 X 1.8	4	27	Y	6	Y	Y	-	-	-	-	Y
8A	1.8 X 18	2-4-2	0	Y	8	Y	Y	-	-	-	-	-
8B	1.8 X 12	2-4-2	+2	Y	8	Y	Y	-	-	-	15	-

THIS PLAN TO SUPERSEDE THE PLAN SEALED ON 8/9/04.

SIGNAL UPGRADE - FINAL DESIGN

N.C. 274 (BESSEMER CITY ROAD)
AT
ARKRAY ST. & MYRTLE SCHOOL ROAD

DIVISION 12 GASTON COUNTY GASTONIA

PLAN DATE: OCT. 30,2003 REVIEWED BY: R.DUBNICKA,P.E.
PREPARED BY: RGL REVIEWED BY:

REVISIONS	INIT.	DATE

SCALE 5 0 10 1:500

SEAL: NORTH CAROLINA PROFESSIONAL SEAL ENGINEER RICHARD E. MULLINIX 7 MARCH 2006

SIGNATURE DATE
SIG. INVENTORY NO. 12-0636

23-MAR-2006 14:55
s:\traffic\signals\workgroups\trip projects\u-2408\signal plans\120636_sig_dsn_20040809.dgn
larry blount

PROJECT REFERENCE NO.	SHEET NO.
U-2408	SIG. 53

EDI MODEL 2010ECL CONFLICT MONITOR PROGRAMMING DETAIL

(remove jumpers and set switches as shown)

WD ENABLE

SW2 — OFF — ON

REMOVE DIODE JUMPERS 1-5, 1-6, 1-15, 2-5, 2-6, 2-13, 2-15, 3-8, 3-16, 4-8, 4-16, 5-13, 6-13, 6-15, 8-16 AND 13-15.

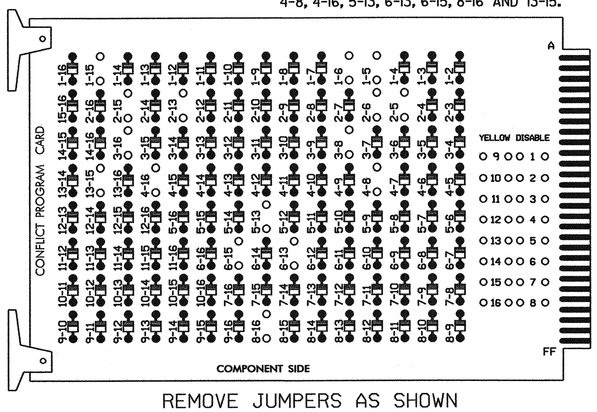

REMOVE JUMPERS AS SHOWN

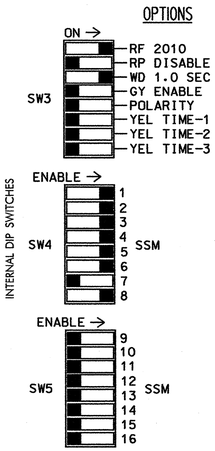

■ = DENOTES POSITION OF SWITCH

NOTES:

1. CARD IS PROVIDED WITH ALL DIODE JUMPERS IN PLACE. REMOVAL OF ANY JUMPER ALLOWS ITS CHANNELS TO RUN CONCURRENTLY.
2. MAKE SURE JUMPERS SEL1-SEL5 ARE PRESENT ON THE MONITOR BOARD.

NOTES

1. TO PREVENT "FLASH-CONFLICT" PROBLEMS, INSERT RED FLASH PROGRAM BLOCKS FOR ALL UNUSED VEHICLE LOAD SWITCHES IN THE OUTPUT FILE. THE INSTALLER SHALL VERIFY THAT SIGNAL HEADS FLASH IN ACCORDANCE WITH THE SIGNAL PLANS.
2. ENSURE THAT RED ENABLE IS ACTIVE AT ALL TIMES DURING NORMAL OPERATION. TO PREVENT RED FAILURES ON UNUSED MONITOR CHANNELS, TIE UNUSED RED MONITOR INPUTS 7,9,10, 11,12,13,14,15 & 16 TO LOAD SWITCH AC+ PER THE CABINET MANUFACTURER'S INSTRUCTIONS.
3. PROGRAM CONTROLLER TO START UP IN PHASES 2 AND 6 GREEN.
4. ENABLE SIMULTANEOUS GAP-OUT FEATURE, ON CONTROLLER UNIT, FOR ALL PHASES.
5. PROGRAM PHASE 8, ON CONTROLLER UNIT, FOR DUAL ENTRY.
6. PROGRAM PHASES 2, 6 AND 8 FOR 'STARTUP PED CALL'.
7. THE CABINET AND CONTROLLER ARE PART OF THE GASTONIA CITY SIGNAL SYSTEM.

EQUIPMENT INFORMATION

CONTROLLER.....CONTRACTOR SUPPLIED 2070L
CABINET .....CONTRACTOR SUPPLIED 332
SOFTWARE .....ECONOLITE OASIS
CABINET MOUNT.....BASE
OUTPUT FILE POSITIONS...12
LOAD SWITCHES USED.....S1,S2,S2P,S3,S4,S5,S6,S6P,S8,S8P
PHASES USED.....1,2,3,4,5,6,8,2PED,6PED,8PED
OVERLAPS.....NONE

FIELD CONNECTION HOOK-UP CHART

LOAD SWITCH NO.	S1	S2	S2P	S3		S4	S4P	S5	S6	S6P	S7	S8	S8P
PHASE	1	2	2 PED	3		4	4 PED	5	6	6 PED	7	8	8 PED
SIGNAL HEAD NO.	61	21 22,23	P21, P22	23	31,32	41,42	NU	21	61,62	P61, P62	NU	81 82,83	P81, P82
GREEN		130				103			136			109	
YELLOW		129				102			135			108	
RED	*	128				101		*	134			107	
RED ARROW					116								
YELLOW ARROW	126			117	117			132					
GREEN ARROW	127			118	118			133					
🚶			115							121			112
✋			113							119			110

NU = NOT USED

* DENOTES INSTALL LOAD RESISTOR. SEE LOAD RESISTOR INSTALLATION DETAIL THIS PAGE.

BACK-UP PROTECTION PROGRAMMING DETAIL

(program controller as shown below)

1. FROM MAIN MENU PRESS '2' (PHASE CONTROL), THEN '1' (PHASE CONTROL FUNCTIONS). SCROLL TO THE BOTTOM OF THE MENU AND ENABLE DYNAMIC/BACKUP CONTROL FUNCTIONS 1,2 AND 3.
2. FROM PHASE CONTROL FUNCTIONS MENU PRESS '2' (DYNAMIC/BACKUP CONTROL FUNCTIONS).

```
DYNAMIC/BACKUP CONTROL FUNCTION #01
              OVERLAPS:¦ABCDEFGHIJKLMNOP
IF OVERLAPS ARE ACTIVE ¦
OR        PHASES:¦123456789101112131415 16
IF PHASES ARE ON¦ X
OMIT PHASES     ¦X
CALL PHASES     ¦   X
```

PRESS 'NEXT'

```
DYNAMIC/BACKUP CONTROL FUNCTION #02
              OVERLAPS:¦ABCDEFGHIJKLMNOP
IF OVERLAPS ARE ACTIVE ¦
OR        PHASES:¦123456789101112131415 16
IF PHASES ARE ON¦   X
OMIT PHASES     ¦  X
CALL PHASES     ¦
```

PRESS 'NEXT'

```
DYNAMIC/BACKUP CONTROL FUNCTION #03
              OVERLAPS:¦ABCDEFGHIJKLMNOP
IF OVERLAPS ARE ACTIVE ¦
OR        PHASES:¦123456789101112131415 16
IF PHASES ARE ON¦     X
OMIT PHASES     ¦    X
CALL PHASES     ¦   X
```

BACKUP PROTECTION PROGRAMMING COMPLETE

THIS DETAIL SUPERSEDES DETAIL SEALED ON 3/28/05

INPUT FILE POSITION LAYOUT

(front view)

		1	2	3	4	5	6	7	8	9	10	11	12	13	14
FILE "I"	U	SLOT	Ø1	Ø2	SLOT	SLOT	Ø3	Ø4	SLOT	SLOT	SLOT	SLOT	Ø2 PED	Ø6 PED	FS
			1A	2A,2B			3A	4A					DC ISOLATOR	DC ISOLATOR	DC ISOLATOR
	L	EMPTY	Ø6	Ø2	EMPTY	EMPTY	Ø3	Ø4	EMPTY	EMPTY	EMPTY	EMPTY	NOT USED	Ø8 PED	ST
			1A	2C,2D			3B	4B						DC ISOLATOR	DC ISOLATOR
FILE "J"	U	SLOT	Ø5	Ø6	SLOT	SLOT	Ø8		SLOT	SLOT	SLOT	SLOT	SLOT	SLOT	SLOT
			5A	6A,6B			8A								
	L	EMPTY	Ø2	Ø6	EMPTY	EMPTY	Ø8		EMPTY	EMPTY	EMPTY	EMPTY	EMPTY	EMPTY	EMPTY
			5A	6C,6D			8B								

EX.: 1A, 2A, ETC. = LOOP NO.'S

FS = FLASH SENSE
ST = STOP TIME

INPUT FILE CONNECTION & PROGRAMMING CHART

LOOP NO.	LOOP TERMINAL	INPUT FILE POS.	PIN NO.	INPUT ASSIGNMENT NO.	DETECTOR NO.	NEMA PHASE	CALL	EXTEND	FULL TIME DELAY	STRETCH TIME	DELAY TIME
1A[1]	TB2-5,6	I2U	39	1	2	1	Y	Y			15
	TB2-7,8	I2L	43	5	12	6	Y	Y			
2A,2B	TB2-9,10	I3U	63	25	32	2	Y	Y		1.8	
2C,2D	TB2-11,12	I3L	76	38	42	2	Y	Y			
3A	TB4-9,10	I6U	41	3	4	3	Y	Y			3
3B	TB4-11,12	I6L	45	7	14	3	Y	Y			3
4A	TB6-1,2	I7U	65	27	34	4	Y	Y			5
4B	TB6-3,4	I7L	78	40	44	4	Y	Y			10
5A[2]	TB3-5,6	J2U	40	2	6	5	Y	Y			15
	TB3-7,8	J2L	44	6	16	2	Y	Y			
6A,6B	TB3-9,10	J3U	64	26	36	6	Y	Y		1.8	
6C,6D	TB3-11,12	J3L	77	39	46	6	Y	Y			
8A	TB5-9,10	J6U	42	4	8	8	Y	Y			
8B	TB5-11,12	J6L	46	8	18	8	Y	Y			15
PED PUSH BUTTONS											
P21,P22	TB8-4,6	I12U	67	29	PED 2	2 PED					
P61,P62	TB8-7,9	I13U	68	30	PED 6	6 PED					
P81,P82	TB8-8,9	I13L	70	32	PED 8	8 PED					

NOTE:
INSTALL DC ISOLATORS IN INPUT FILE SLOTS I12 AND I13.

[1] ADD JUMPERS FROM TB2-5 TO TB2-7, AND FROM TB2-6 TO TB2-8.
[2] ADD JUMPERS FROM TB3-5 TO TB3-7, AND FROM TB3-6 TO TB3-8.

INPUT FILE POSITION LEGEND: J2L
FILE J
SLOT 2
LOWER

LOAD RESISTOR INSTALLATION DETAIL

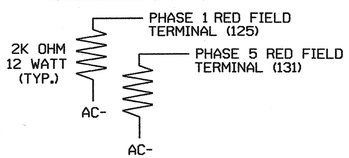

NOTE: THE PURPOSE OF THESE RESISTORS IS TO LOAD THE CHANNEL RED MONITOR INPUTS IN ORDER FOR THE SIGNAL SEQUENCE MONITOR TO USE THE FULL SIGNAL SEQUENCE MONITORING CAPABILITY ON CHANNELS THAT DO NOT USE THE RED DISPLAY IN THE FIELD.

THIS ELECTRICAL DETAIL IS FOR
THE SIGNAL DESIGN: 12-0636
DESIGNED: October 2003
SEALED: 3/07/06
REVISED: NA

COUNTDOWN PEDESTRIAN SIGNAL OPERATION

Countdown Ped Signals are required to display timing only during Ped Clearance Interval. Consult Ped Signal Module user's manual for instructions on selecting this feature.

SIGNAL UPGRADE

ELECTRICAL AND PROGRAMMING DETAILS FOR:

NC 274 (BESSEMER CITY ROAD) AT ARKAY ST. & MYRTLE SCHOOL ROAD

DIVISION 12 | GASTON COUNTY | GASTONIA

PLAN DATE: MARCH 2006	REVIEWED BY: T. Joyce
PREPARED BY: PAUL MARAK	REVIEWED BY:

REVISIONS	INIT.	DATE

Prepared in the Offices of: Traffic Engineering and Safety Systems Branch, Signals Management Section, Division of Highways, State of North Carolina, Department of Transportation
122 N. McDowell St., Raleigh, NC 27603

SEAL
NORTH CAROLINA PROFESSIONAL SEAL 008453 ENGINEER JOHN T. ROWE, JR.

John T Rowe Jr 3-28-06
SIGNATURE DATE

SIG. INVENTORY NO. 12-0636

28-MAR-2006 13:28
U:\#12636.20060328e.dgn
DGN:CMS

METRIC	PROJECT REFERENCE NO.	SHEET NO.
	U-2408	SIG. 54

8 PHASE FULLY ACTUATED GASTONIA CITY SIGNAL SYSTEM

PHASING DIAGRAM

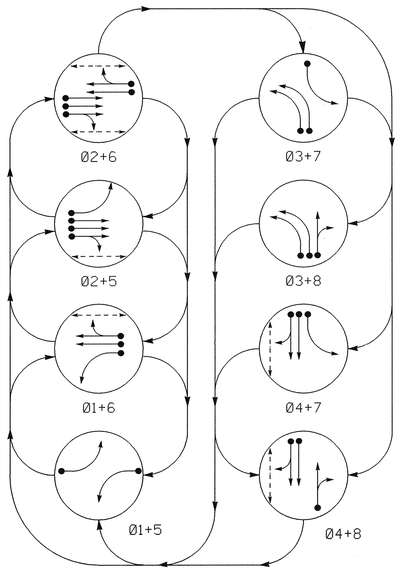

PHASING DIAGRAM DETECTION LEGEND

- DETECTED MOVEMENT
- UNDETECTED MOVEMENT (OVERLAP)
- UNSIGNALIZED MOVEMENT
- PEDESTRIAN MOVEMENT

TABLE OF OPERATION

SIGNAL FACE	PHASE Ø1+5	Ø1+6	Ø2+5	Ø2+6	Ø3+7	Ø3+8	Ø4+7	Ø4+8	FLASH
11	←	←	~~R~~	~~R~~	~~R~~	~~R~~	~~R~~	~~R~~	~~R~~
21,22	R	R	G	G	R	R	R	R	Y
31,32	~~R~~	~~R~~	~~R~~	~~R~~	←	←	~~R~~	~~R~~	~~R~~
41,42	R	R	R	R	R	R	G	G	R
51	←	~~R~~	←	~~R~~	~~R~~	~~R~~	~~R~~	~~R~~	~~R~~
61,62	R	G	R	G	R	R	R	R	Y
71	~~R~~	~~R~~	~~R~~	~~R~~	←	~~R~~	←	~~R~~	~~R~~
81,82	R	R	R	R	R	G	R	G	R
P21,22	DW	DW	W	W	DW	DW	DW	DW	DRK
P41,42	DW	DW	DW	DW	DW	DW	W	W	DRK
P61,62	DW	W	DW	W	DW	DW	DW	DW	DRK

SIGNAL FACE I.D.

	300mm	300mm
P21, P22	11	21, 22
P41, P42	31, 32	41, 42
P61, P62	51	61, 62
	71	81, 82

PLAN QUANTITIES

Pay Item	Meters
Signal Cable	220
Messenger Cable	0
Loop Lead-in Cable	75

NOTES

1. Refer to "Roadway Standard Drawings NCDOT" dated January 2002 and "Standard Specifications for roads and Structures" dated January 2002.
2. Set all detector units to presence mode.
3. Maximum times shown in timing chart are for free run operation only. Coordinated signal system timing values shall supersede these values.
4. During coordination, phase 1 or phase 5 may be lagged.
5. During coordination, phase 3 or phase 7 may be lagged.
6. Omit "WALK" and flashing "DON'T WALK" with no pedestrian calls.
7. Closed loop system data: telemetry address number 502
8. Reposition existing signal head numbered #41.

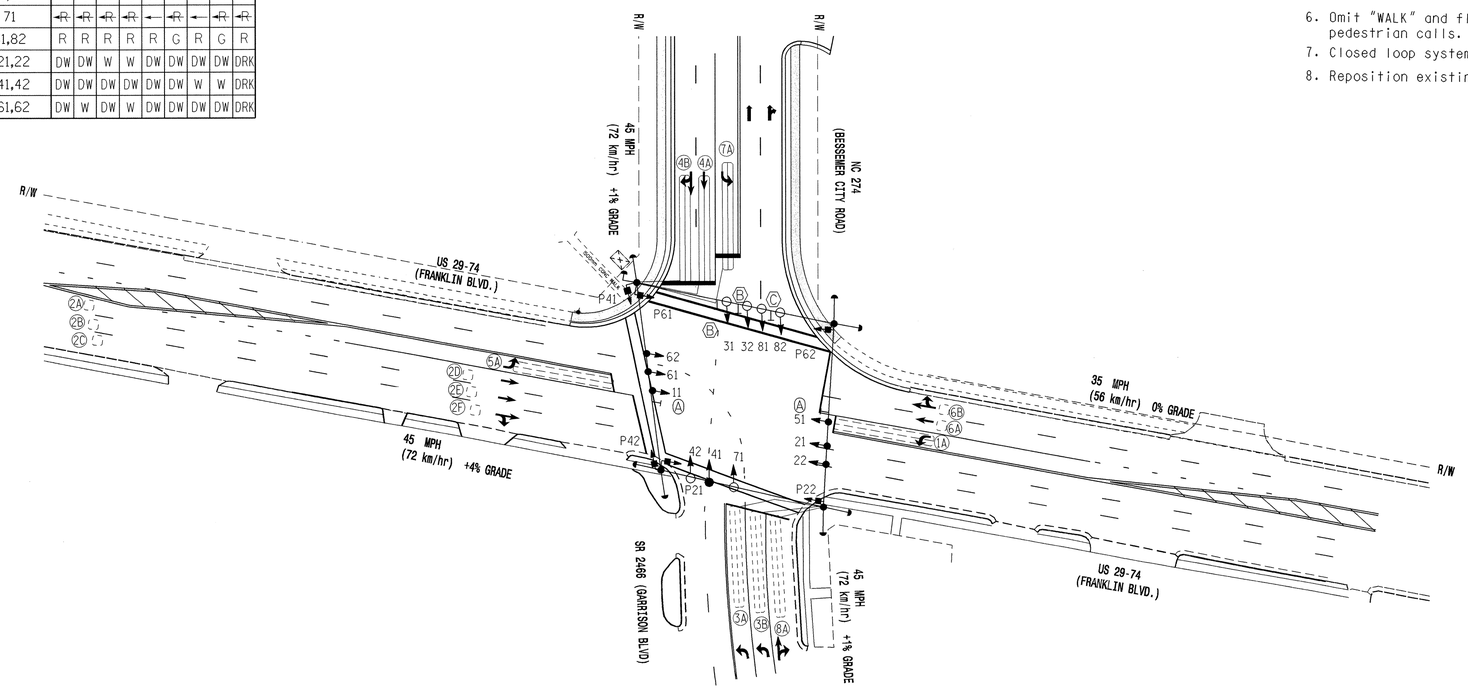

LEGEND

PROPOSED		EXISTING
	Traffic Signal Head	
	Modified Signal Head	N/A
	Sign	
	Pedestrian Signal Head With Push Button & Sign	
	Signal Pole with Guy	
	Signal Pole with Sidewalk Guy	
	Inductive Loop Detector	
	Controller & Cabinet	
	Junction Box	
	50mm Underground Conduit	
N/A	Right of Way with Marker	
	Directional Arrow	
	Pavement Marking Arrow	
Ⓐ	U-Turn "MUST YIELD" Sign (R3-27)	Ⓐ
Ⓑ	Left Arrow "ONLY" Sign (R3-5L)	Ⓑ
Ⓒ	Combined Through and Right Arrow Sign (R3-6R)	Ⓒ

TIMING CHART
NEMA CONTROLLER

PHASE	Ø1	Ø2	Ø3	Ø4	Ø5	Ø6	Ø7	Ø8
MINIMUM GREEN	7 SEC.	12 SEC.	7 SEC.	7 SEC.	7 SEC.	12 SEC.	7 SEC.	7 SEC.
PASSAGE/GAP	1.0 SEC.	2.0 SEC.	1.0 SEC.	1.0 SEC.	1.0 SEC.	3.0 SEC.	1.0 SEC.	1.0 SEC.
YELLOW CHANGE INT.	4.0 SEC.	4.7 SEC.	4.0 SEC.	4.7 SEC.	4.0 SEC.	4.7 SEC.	4.0 SEC.	4.7 SEC.
RED CLEARANCE	2.0 SEC.	1.5 SEC.	3.0 SEC.	2.5 SEC.	2.0 SEC.	1.5 SEC.	3.0 SEC.	2.5 SEC.
MAX. 1	15 SEC.	40 SEC.	30 SEC.	20 SEC.	15 SEC.	40 SEC.	30 SEC.	20 SEC.
RECALL POSITION	NONE	MIN. RECALL	NONE	NONE	NONE	MIN. RECALL	NONE	NONE
VEHI. CALL MEMORY	NONLOCK	LOCK	NONLOCK	NONLOCK	NONLOCK	LOCK	NONLOCK	NONLOCK
WALK	– SEC.	4 SEC.	– SEC.	4 SEC.	– SEC.	4 SEC.	– SEC.	– SEC.
FLASHING DON'T WALK	– SEC.	18 SEC.	– SEC.	16 SEC.	– SEC.	23 SEC.	– SEC.	– SEC.
VOLUME DENSITY	OFF	OFF	OFF	OFF	OFF	OFF	OFF	OFF
ACTUATION B4 ADD	– VEH.	– VEH.	– VEH.	– VEH.	– VEH.	– VEH.	– VEH.	– VEH.
SEC. PER ACTUATION	– SEC.	– SEC.	– SEC.	– SEC.	– SEC.	– SEC.	– SEC.	– SEC.
MAX. INITIAL	– SEC.	– SEC.	– SEC.	– SEC.	– SEC.	– SEC.	– SEC.	– SEC.
TIME B4 REDUCTION	– SEC.	– SEC.	– SEC.	– SEC.	– SEC.	– SEC.	– SEC.	– SEC.
TIME TO REDUCE	– SEC.	– SEC.	– SEC.	– SEC.	– SEC.	– SEC.	– SEC.	– SEC.
MINIMUM GAP	– SEC.	– SEC.	– SEC.	– SEC.	– SEC.	– SEC.	– SEC.	– SEC.

LOOP & DETECTOR UNIT INSTALLATION CHART
NEMA CONTROLLER WITH TS-1 CABINET

INDUCTIVE LOOPS						DETECTOR UNITS							
LOOP NO.	SIZE (m)	TURNS	DIST. FROM STOPBAR (m)	NEW	EXISTING	UNIT NO.	NEW	EXISTING	CHANNEL	NEMA PHASE	TIMING FEATURE	TIMING TIME	PLACE CALL DURING PHASE	INHIBIT DELAY DURING GREEN#
1A	1.8 X 1.8	2-4-2	0	–	X	1	–	X	1	1	–	– SEC.	ALL	NO
2A,2B,2C	1.8 X 1.8	5	90	–	X	3	–	X	1	2	EXTEND	1.75 SEC.	ALL	NO
2D,2E,2F	1.8 X 1.8	5	27	–	X	3	–	X	2	2	–	– SEC.	ALL	NO
3A	1.8 X 1.8	2-4-2	0	–	X	4	–	X	1	3	DELAY	3.0 SEC.	ALL	YES
3B	1.8 X 1.8	2-4-2	0	–	X	4	–	X	1	3	–	– SEC.	ALL	NO
4A	1.8 X 1.8	2-4-2	0	X	–	5	–	X	1	4	–	– SEC.	ALL	NO
4B	1.8 X 1.8	2-4-2	0	X	–	5	–	X	2	4	DELAY	10.0 SEC.	ALL	YES
5A	1.8 X 1.8	2-4-2	0	–	X	6	–	X	1	5	–	– SEC.	ALL	NO
6A,6B	1.8 X 1.8	4	21	–	X	7	–	X	1	6	–	– SEC.	ALL	NO
7A	1.8 X 1.8	2-4-2	+2	X		8	X	–	1	7	DELAY	3.0 SEC.	ALL	YES
8A	1.8 X 1.8	2-4-2	0	–	X	2	–	X	1	8	DELAY	10.0 SEC.	ALL	YES

Prepared in the Office of:
THE LPA GROUP
TRANSPORTATION CONSULTANTS
THE LPA GROUP of North Carolina, p.a.
4904 PROFESSIONAL COURT, SUITE 201
Raleigh, North Carolina 27609

SIGNAL UPGRADE - FINAL DESIGN

Traffic Engineering and Safety Systems Branch
STATE OF NORTH CAROLINA DEPARTMENT OF TRANSPORTATION
Signals and Geometrics Section

US 29-74 (FRANKLIN BOULEVARD)
AT
NC 274 (BESSEMER CITY ROAD) /
SR 2466 (GARRISON BOULEVARD)

DIVISION 12 GASTON COUNTY GASTONIA

PLAN DATE: OCT. 30, 2003 REVIEWED BY: R.DUBNICKA,P.E.
PREPARED BY: RGL REVIEWED BY:

SCALE 5 0 10 1:500

REVISIONS	INIT.	DATE

SEAL
NORTH CAROLINA PROFESSIONAL SEAL 027742 ENGINEER ROBERT J. DUBNICKA
SIGNATURE Robert J. Dubnicka DATE 8-9-04
SIG. INVENTORY NO. 12-0030

09-AUG-2004 12:27
s:\traffic\Signals\U2408\Signal Plans\SIG-9B.dgn
rdubnicka

PROJECT REFERENCE NO.	SHEET NO.
U-2408	SIG. 55

NEMA CONFLICT MONITOR PROGRAMMING CARD

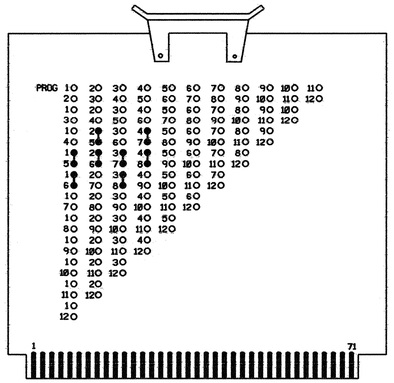

(INSTALL JUMPERS AS SHOWN)

NOTE: MONITOR SHALL BE PROGRAMMED FOR FULL SIGNAL SEQUENCE MONITORING. (NEMA+)

NEMA OVERLAP CARD

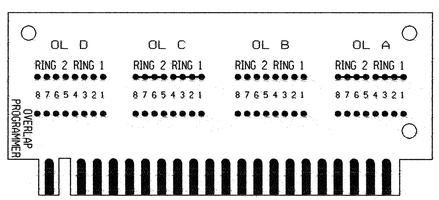

OVERLAP CARD SHALL BE COMPLETELY BLANK (NO OVERLAPS)

NOTES

1. TO PREVENT "FLASH-CONFLICT" PROBLEMS, WIRE ALL UNUSED PHASES AND OVERLAPS TO FLASH RED. VERIFY THAT SIGNAL HEADS FLASH IN ACCORDANCE WITH THE SIGNAL PLANS.
2. TO PREVENT RED FAILURES ON UNUSED MONITOR CHANNELS, TIE UNUSED LOAD SWITCH RED OUTPUTS 9,10,11 AND 12 TO LOAD SWITCH AC+ BY INSERTING A JUMPER PLUG IN THE UNUSED LOAD SWITCH SOCKET FROM PIN 1 (LS AC+) TO PIN 3 (RED OUT). MAKE SURE ALL FLASH TRANSFER RELAYS ARE IN PLACE.
3. PROGRAM CONTROLLER TO START UP IN PHASES 2 AND 6 GREEN.
4. SET POWER-UP FLASH TIME TO 10 SECONDS AND IMPLEMENT ON THE CONFLICT MONITOR. SET CONTROLLER POWER-UP FLASH TIME TO 0 SECONDS.
5. ENABLE SIMULTANEOUS GAP-OUT FEATURE, ON CONTROLLER UNIT, FOR ALL PHASES.
6. WIRE DETECTORS IN ACCORDANCE WITH THE MANUFACTURER'S INSTRUCTIONS TO ACCOMPLISH THE DETECTION SCHEMES SHOWN ON THE SIGNAL DESIGN PLANS.
7. SET ALL DETECTOR UNIT CHANNELS TO "PRESENCE" MODE.
8. THE CABINET AND CONTROLLER ARE PART OF THE GASTONIA CITY SIGNAL SYSTEM.

EQUIPMENT INFORMATION

CONTROLLER.....TCT LMD-8000
CABINET.....PEEK DWG NO. 8500#9222
CABINET MOUNT.....BASE
LOADBAY POSITIONS.....16
LOAD SWITCHES USED.....1,2,3,4,5,6,7,8,13,14,15
PHASES USED.....1,2,3,4,5,6,7,8,PED2,PED4,PED6
OVERLAP A.....NOT USED
OVERLAP B.....NOT USED
OVERLAP C.....NOT USED
OVERLAP D.....NOT USED

TYPICAL CONNECTION CHART FOR DETECTORS

PIN FUNCTION	LOOP PANEL TERMINATION
AC+	AC+
AC-	AC-
CHASSIS GROUND	CHASSIS GROUND
LOOP INPUT	LOOP
LOOP INPUT	LOOP
RELAY NORMALLY OPEN	VEHICLE CALL INPUT
RELAY COMMON	LOGIC GROUND
TIMER INHIBIT	ASSOCIATED PHASE GREEN

NOTES:

1. THE TIMER INHIBIT WIRE SHALL BE CONNECTED TO THE ASSOCIATED PHASE GREEN LOAD SWITCH OUTPUT WHEN ONLY DELAY OPERATION IS REQUIRED UNLESS OTHERWISE SPECIFIED BY THE LOOP AND DETECTOR UNIT INSTALLATION CHART.
2. IF EXTEND OPERATION IS REQUIRED, THE DELAY INHIBIT WIRE SHALL NOT BE CONNECTED.

FIELD CONNECTION HOOK-UP CHART

PHASE	1	2	3	4	5	6	7	8	OLA	OLB	OLC	OLD	2 PED	4 PED	6 PED	8 PED
SIGNAL HEAD NO.	11	21,22	31,32	41,42	51	61,62	71	81,82	NU	NU	NU	NU	P21, P22	P41, P42	P61, P62	NU
GREEN		506		512		518		524								
YELLOW		505		511		517		523								
RED		504		510		516		522								
RED ARROW	501		507		513		519									
YELLOW ARROW	502		508		514		520									
GREEN ARROW	503		509		515		521									
													734	732	730	
													733	731	729	

NU = NOT USED

✳ DENOTES INSTALL LOAD RESISTOR. SEE LOAD RESISTOR INSTALLATION DETAIL THIS PAGE.

PEDESTRIAN PUSH-BUTTON WIRING DETAIL

(wire push-buttons as shown below)

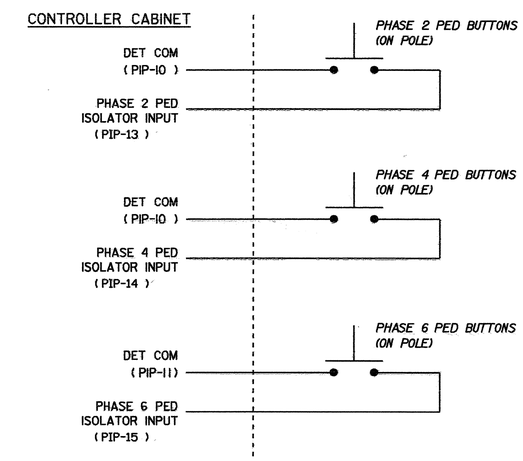

NOTE: MAKE SURE PED ISOLATOR CIRCUIT IS PRESENT IN CONTROLLER/CABINET ASSEMBLY.

THIS ELECTRICAL DETAIL IS FOR
THE SIGNAL DESIGN: 12-0030
DESIGNED: 10/30/03
SEALED: 08/09/04
REVISED:

SIGNAL UPGRADE - FINAL DESIGN

ELECTRICAL AND PROGRAMMING DETAILS FOR:

US 29-74 (FRANKLIN BOULEVARD) AT NC 274 (BESSEMER CITY ROAD) / SR 2466 (GARRISON BOULEVARD)

DIVISION 12 GASTON COUNTY GASTONIA

PLAN DATE: JULY 2004 REVIEWED BY: T. Jack
PREPARED BY: WILLIAM HAIRSTON REVIEWED BY:

REVISIONS	INIT.	DATE

Prepared in the Offices of:
Traffic Engineering and Safety Systems Branch
STATE OF NORTH CAROLINA DEPARTMENT OF TRANSPORTATION
Signal Management Section
122 N. McDowell St., Raleigh, NC 27603

SEAL
NORTH CAROLINA PROFESSIONAL SEAL 022013 ENGINEER GEORGE C. BROWN

George C. Brown 8/11/04
SIGNATURE DATE

SIG. INVENTORY NO. 12-0030

10-AUG-2004 16:27
S:*ctjMgmt*tjoyce*U2408*12030_2004xxxxb.dgn
tjoyce

23-SEP-2003 11:29
W:\Peoples-Unit\Workgroups\03RoadwayStandardDwgs\English\plan sheets\174001 first.dgn
condrews

STATE OF NORTH CAROLINA
DEPT. OF TRANSPORTATION
DIVISION OF HIGHWAYS
RALEIGH, N.C.

ENGLISH STANDARD DRAWING FOR
METAL POLES
ELECTRICAL SERVICE AND SIGNAL CABINET MOUNTING OPTIONS

SHEET 1 OF 3
1740.01

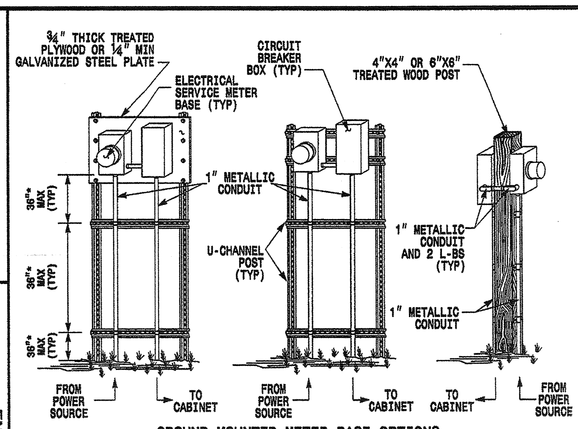

GROUND MOUNTED METER BASE OPTIONS
WITH UNDERGROUND ELECTRICAL SERVICE
*MAXIMUM TOTAL HEIGHT TO METER BASE NOT TO EXCEED 5'

GENERAL NOTES

1. WHEN TRAFFIC SIGNALS ARE INSTALLED USING METAL SIGNAL SUPPORTS:
   - BASE MOUNTED CABINETS ARE THE PREFERRED CABINET OPTION.
   - ROUTE POWER SOURCE UNDERGROUND AND USE GROUND MOUNTING OPTIONS SHOWN ABOVE TO INSTALL METER BASE AND CIRCUIT BREAKER BOX IF POSSIBLE.
2. LOCATE THE METER BASE ASSEMBLY NEAR THE SIGNAL CABINET IN A MANNER THAT WILL ALLOW EASY ACCESS TO THE CIRCUIT BREAKER BOX.
3. INSTALL METER BASE ASSEMBLIES AS SHOWN ABOVE. ENSURE 1" METALLIC CONDUITS ARE PROPERLY SECURED BETWEEN THE METER BASE ASSEMBLIES AND THE GROUND TO MINIMIZE DAMAGE POTENTIAL. REFER TO ROADWAY STANDARD DRAWING 1751.02 FOR ELECTRICAL SERVICE DETAILS.
4. INSTALL ELECTRICAL SERVICE ENTRANCE CONDUCTOR AS SHOWN WHEN UNDERGROUND SOURCE IS NOT AN OPTION. METER BASE AND CIRCUIT BREAKER BOX MAY BE INSTALLED ON THE POLE WHEN POLE MOUNTED CABINETS ARE REQUIRED FOR THE INSTALLATION. SEE SHEET 2 FOR ADDITIONAL INSTALLATION DETAILS.
5. FOR POLE MOUNTED CABINETS, USE A FACTORY DRILLED HOLE IN THE TERMINAL COMPARTMENT TO PROVIDE ACCESS FOR SIGNAL WIRES ENTERING THE POLE FROM THE CABINET. FIELD DRILLED HOLES ARE ACCEPTABLE ONLY IF APPROVED BY THE ENGINEER.
6. SEE ROADWAY STANDARD DRAWING 1406.01 (LIGHT STANDARD LUMINAIRES) FOR LUMINAIRE INSTALLATIONS.

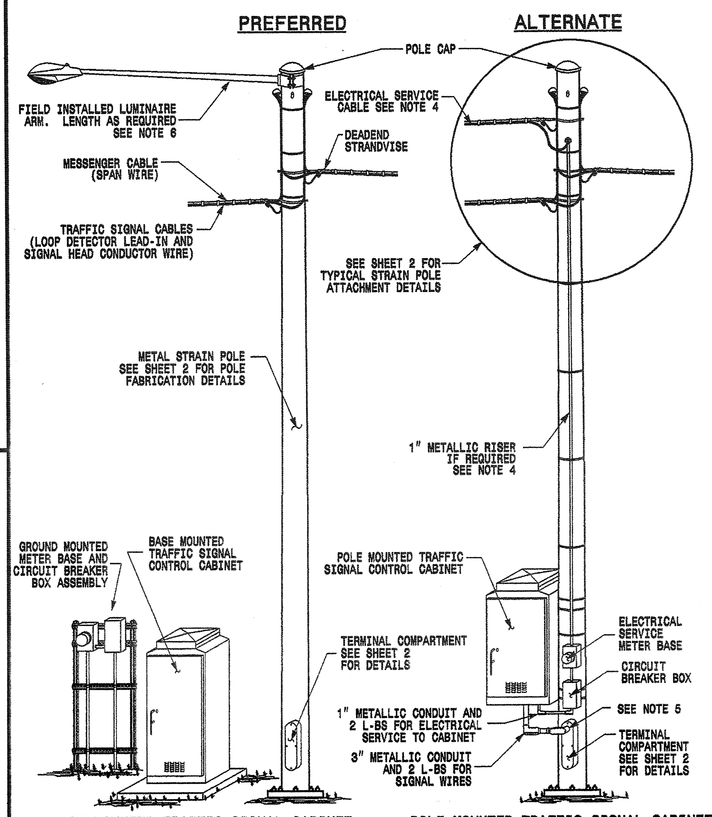

BASE MOUNTED TRAFFIC SIGNAL CABINET WITH GROUND MOUNTED METER BASE AND UNDERGROUND ELECTRICAL SERVICE

POLE MOUNTED TRAFFIC SIGNAL CABINET WITH POLE MOUNTED METER BASE AND OVERHEAD ELECTRICAL SERVICE

STATE OF NORTH CAROLINA
DEPT. OF TRANSPORTATION
DIVISION OF HIGHWAYS
RALEIGH, N.C.

ENGLISH STANDARD DRAWING FOR
METAL POLES
ELECTRICAL SERVICE AND SIGNAL CABINET MOUNTING OPTIONS

SHEET 1 OF 3
1740.01

STATE OF NORTH CAROLINA
DEPT. OF TRANSPORTATION
DIVISION OF HIGHWAYS
RALEIGH, N.C.
9-03

ENGLISH STANDARD DRAWING FOR
METAL POLES
FABRICATION AND ATTACHMENT DETAILS

SHEET 2 OF 3
1740.01

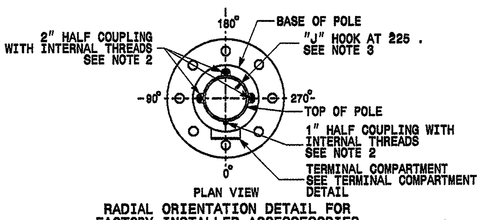

RADIAL ORIENTATION DETAIL FOR FACTORY INSTALLED ACCESSESORIES

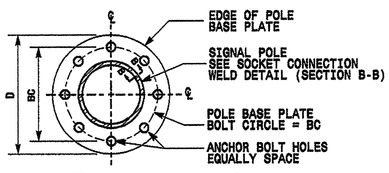

TYPICAL 8 BOLT BASE PLATE DETAIL

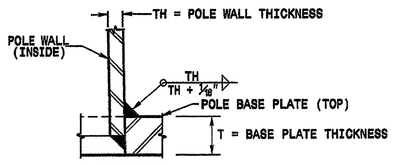

POLE BASE PLATE
SOCKET CONNECTION WELD DETAIL

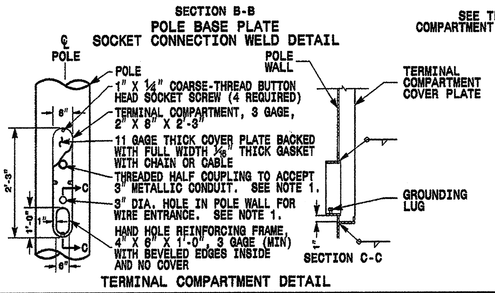

TERMINAL COMPARTMENT DETAIL

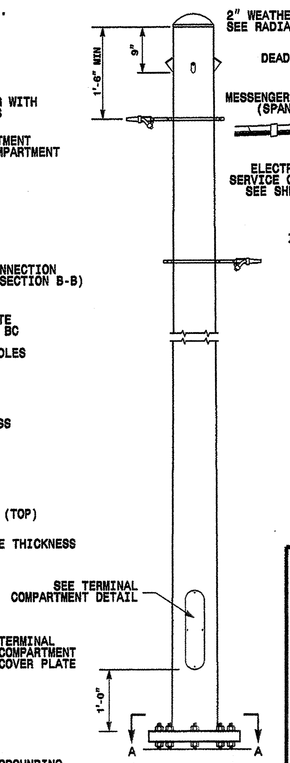

ELEVATION VIEW
TYPICAL POLE
ROUND MONOTUBE POLE
(.14"/FOOT TAPER)

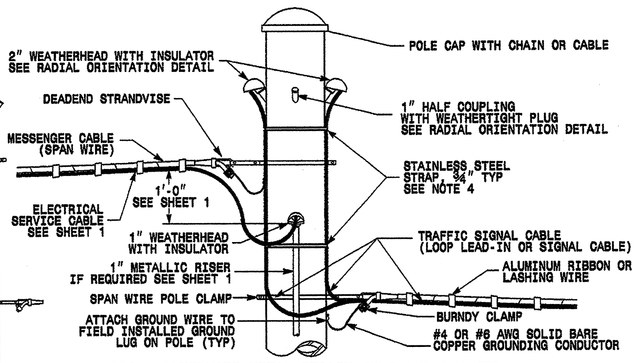

TYPICAL ALTERNATE METAL STRAIN POLE ATTACHMENTS

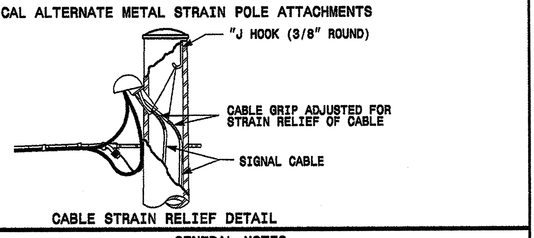

CABLE STRAIN RELIEF DETAIL

GENERAL NOTES

1. PROVIDE 2-3" FACTORY DRILLED HOLES THROUGH THE POLE WALL FOR WIRE ENTRANCE ACCESS INSIDE THE TERMINAL COMPARTMENT. LOCATE THE HOLES IN THE CENTER OF THE TERMINAL COMPARTMENT (0 DEGREES ON THE POLES RADIAL INDEX) AT 26" AND 36" FROM BASE OF THE POLE. WELD A THREADED HALF COUPLING IN THE TOP HOLE THAT CAN RECEIVE A 3" DIA. METALLIC CONDUIT.
2. FABRICATE THE METAL POLE WITH 3-2" THREADED HALF COUPLINGS AND 1-1" THREADED HALF COUPLING INSTALLED 9" FROM THE TOP OF THE POLE TO FACILITATE WEATHERHEAD INSTALLATION FOR SIGNAL WIRE ENTRANCE TO THE POLE. WELD THE COUPLINGS TO THE POLE AT AN ANGLE OF NO LESS THAN 45 DEGREES FROM HORIZONTAL TO PROPERLY INSTALL THE WEATHERHEADS. LOCATE THE HALF COUPLINGS ON THE POLE AS SHOWN IN THE RADIAL ORIENTATION DETAIL.
3. PROVIDE A FACTORY STANDARD "J" HOOK FOR CABLE SUPPORT WELDED INSIDE THE TOP OF THE POLE AT 225 DEGREES ON THE POLES RADIAL INDEX.
4. STRAP ALL SIGNAL CABLES TO THE SIDE OF THE POLE WHEN THE DISTANCE BETWEEN THE SPANWIRE ATTACHMENT CLAMP ON THE POLE AND THE WEATHERHEADS EXCEEDS 36". USE ¾" STAINLESS STEEL STRAPS TO SECURE WIRE TO THE POLE.
5. DO NOT INSTALL FIBER OPTIC COMMUNICATION CABLE IN OR ON ANY METAL POLES FOR THE PURPOSE OF TRANSITIONING THE RUNS FROM OVERHEAD TO UNDERGROUND. OVERHEAD ATTACHMENTS MAY BE ALLOWED USING A 3-BOLT CLAMP WITH "J" HOOK IF THE PURPOSE OF THE ATTACHMENT IS TO CONTINUE A RUN OVERHEAD. SEE SHEET 3.

STATE OF NORTH CAROLINA
DEPT. OF TRANSPORTATION
DIVISION OF HIGHWAYS
RALEIGH, N.C.
9-03

ENGLISH STANDARD DRAWING FOR
METAL POLES
FABRICATION AND ATTACHMENT DETAILS

SHEET 2 OF 3
1740.01

Structural Engineer
SIGNATURE: D. Sarkar 9.23.03 DATE
NORTH CAROLINA PROFESSIONAL SEAL 028094 ENGINEER DEBASISH C. SARKAR

Electrical Engineer
SIGNATURE: Philip Poe 8-24-03 DATE
NORTH CAROLINA PROFESSIONAL SEAL 16286 ENGINEER PHILIP L. POE

Standard Drawings
Traffic Management and Signal Systems Unit
122 N. Maxwell St., Raleigh, NC 27603

See Plate for Title

Original: 2002 Standards

PROJECT REFERENCE NO. U-2408
SHEET NO. Stg. 56

PROJECT REFERENCE NO.	SHEET NO.
U-2408	Sig 57

STATE OF NORTH CAROLINA
DEPT. OF TRANSPORTATION
DIVISION OF HIGHWAYS
RALEIGH, N.C.

9-03

ENGLISH STANDARD DRAWING FOR
METAL POLES
MISCELLANEOUS DETAILS

SHEET 3 OF 3
1740.01

MOUNTING POINT DETAIL

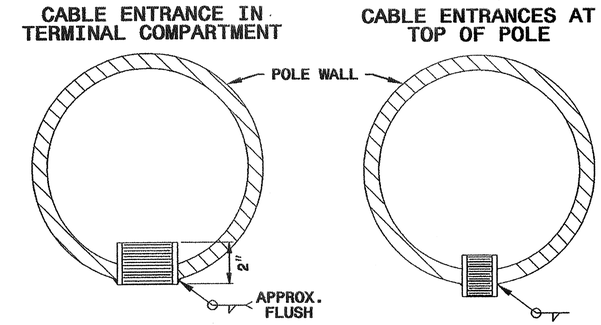

SEE GENERAL NOTE NO. 1 ON SHEET 2 OF THIS STANDARD DRAWING FOR FABRICATION DETAILS.

SEE GENERAL NOTE NO. 2 ON SHEET 2 OF THIS STANDARD DRAWING FOR FABRICATION DETAILS.

CABLE STRAIN RELIEF

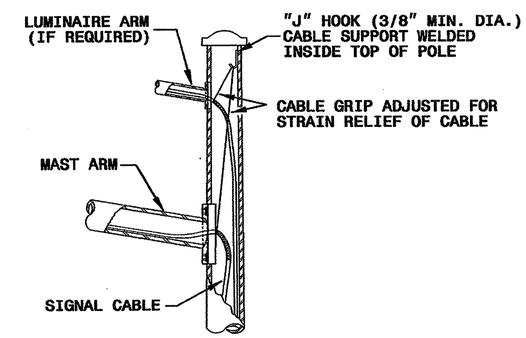

METAL POLE GROUNDING DETAIL

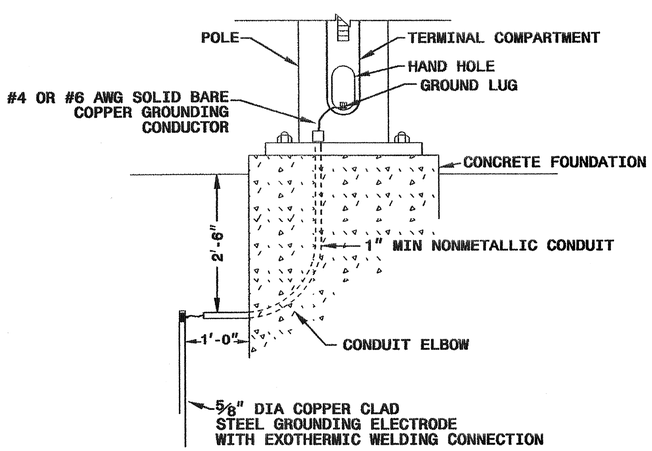

ATTACHMENT OF CABLE TO INTERMEDIATE METAL POLE

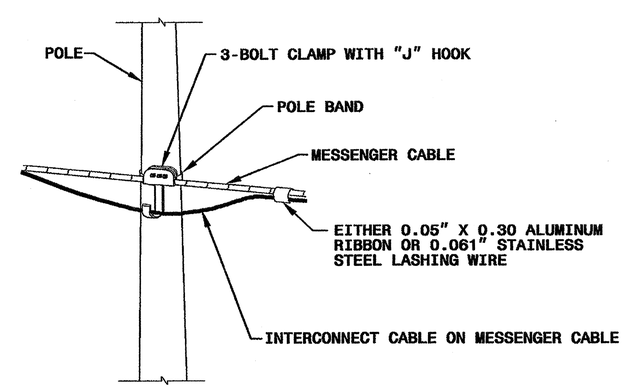

STATE OF NORTH CAROLINA
DEPT. OF TRANSPORTATION
DIVISION OF HIGHWAYS
RALEIGH, N.C.

9-03

ENGLISH STANDARD DRAWING FOR
METAL POLES
MISCELLANEOUS DETAILS

SHEET 3 OF 3
1740.01

Structural Engineer	Electrical Engineer
NORTH CAROLINA PROFESSIONAL SEAL 028094 ENGINEER DEBESH C. SARKAR	NORTH CAROLINA PROFESSIONAL SEAL 16286 ENGINEER MILTON I. DEAN
D. Sarkar 9.19.2003	Milton I. Dean 9/22/03
SIGNATURE DATE	SIGNATURE DATE

Standard Drawings

Traffic Management and Signal Systems Unit
122 N. McDowell St., Raleigh, NC 27603

See Plate for Title

Original: 2002 Standards

19-SEP-2003 14:27
W:\Peoples-Unit\Workgroups\03RoadwayStandardDwgs\english\plan sheets\174001 second.dgn
palexander

10-SEP-2003 09:46
U:#standards#03RoadwayStandardDwgs#english#plan sheets#1742.01 plan sheet.dgn
polexander

STATE OF NORTH CAROLINA
DEPT. OF TRANSPORTATION
DIVISION OF HIGHWAYS
RALEIGH, N.C.

ENGLISH STANDARD DRAWING FOR
METAL POLE FOUNDATIONS
REINFORCING CAGE DETAILS

SHEET 1 OF 2
1742.01

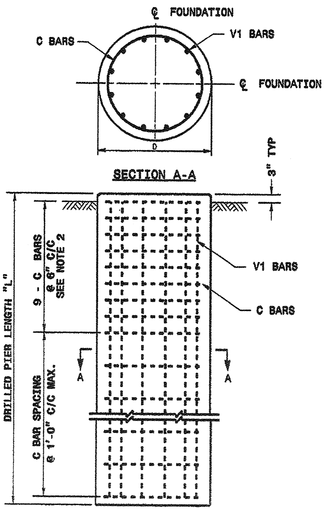

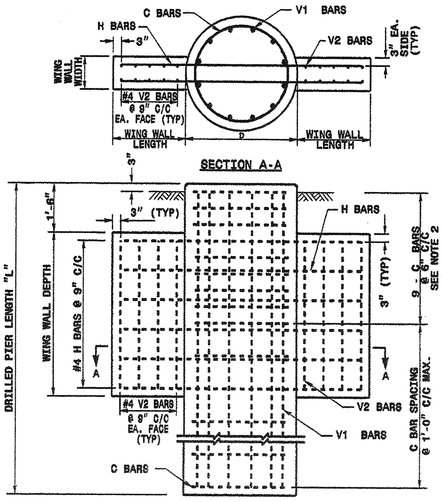

REINFORCING STEEL TABLE FOR STANDARD DRILL PIER SHAFT (42" & 48" DIAMETER)						
SHAFT DIA. (in.)	VOLUME OF CONC. (cu. yds.)	BAR NAME	No.	Size	Type	Length
42"	.356 x L	V1	9	#8	STR.	**
		C	*	#4	CIR.	10'-9"
48"	.465 x L	V1	12	#8	STR.	**
		C	*	#4	CIR.	12'-6"

* See Construction Note No. 1.
** See Construction Note No. 2.

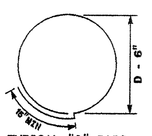

TYPICAL "C" BARS

REINFORCING STEEL TABLE FOR STANDARD 42" and 48" DRILL PIER SHAFT WITH TYPE 1 AND TYPE 2 WING WALLS						
Wing Wall Type	Drill Pier Shaft Dia. (in.)	Reinforcing Steel				
		Bar Name	No.	Size	Type	Length
TYPE 1	42"	V1	8	#8	STR.	**
		V2	12	#4	STR.	2'-6"
		H	8	#4	STR.	8'-0"
		C	*	#4	CIR.	10'-9"
TYPE 2	42"	V1	8	#8	STR.	**
		V2	16	#4	STR.	4'-6"
		H	12	#4	STR.	9'-0"
		C	*	#4	CIR.	10'-9"
TYPE 2	48"	V1	12	#8	STR.	**
		V2	16	#4	STR.	4'-6"
		H	12	#4	STR.	9'-6"
		C	*	#4	CIR.	12'-6"

* See Construction Note No. 1.
** See Construction Note No. 2.

WING WALL DETAILS				
Wing Wall Type	Wing Wall Length (Ft.)	Wing Wall Width (Ft.)	Wing Wall Depth (Ft.)	Concrete Volume (Cu. Yds.)
TYPE 1	1'-6"	1'-0"	8'-0"	.4
TYPE 2	3'-0"	1'-0"	8'-0"	1.2

See Construction Note No. 3.

NOTES

1. THE NUMBER OF C-BARS IS BASED ON FOUNDATION DEPTH. SEE FOUNDATION SELECTION TABLES.
2. CIRCULAR TIE REINFORCING RINGS MAY BE VERTICALLY ADJUSTED BY +/- 3" AT A DEPTH BETWEEN 2'-0" AND 3'-0" TO FACILITATE THE INSTALLATION OF ELECTRICAL CONDUIT ENTERING IN THE CAGE.
3. THE LENGTH OF V1-BARS IS BASED ON FOUNDATION DEPTH. SEE FOUNDATION SELECTION TABLES.
4. THE QUANTITIES FOR STEEL AND CONCRETE SHOWN IN THE WING WALL DETAILS CHART REFLECT THE AMOUNT OF MATERIAL FOR 1 PAIR OF WING WALLS (2 WING WALLS PER DRILL PIER SHAFT.)
5. CONCRETE DRILL PIER SHAFT VOLUME (CU. YDS.):
   FOR 42" DIA.= .356xL
   FOR 48" DIA.= .465xL
6. DEFORM REINFORCING STEEL TO CONFORM TO ASTM A615 GRADE 60. TIES MAY BE DEFORMED OR PLAIN.
7. CAST CONCRETE AGAINST UNDISTURBED SOIL.
8. DO NOT ERECT TRAFFIC SIGNAL STRUCTURES BEFORE THE CONCRETE IN THE FOUNDATION HAS ATTAINED A MINIMUM COMPRESSIVE STRENGTH OF 3000 PSI.
9. MAKE PROVISIONS FOR DRAINAGE OF WATER FROM INSIDE OF THE METAL SUPPORT.
10. FOR OTHER DETAILS REGARDING CONSTRUCTION OF CONCRETE FOUNDATION SEE PROJECT SPECIAL PROVISIONS.
11. IN CASE OF ANY CROSS SLOPES, GRADE AROUND THE FOUNDATION AS FOLLOWS:

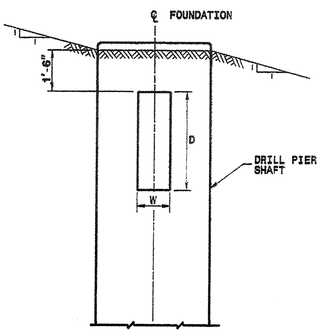

STATE OF NORTH CAROLINA
DEPT. OF TRANSPORTATION
DIVISION OF HIGHWAYS
RALEIGH, N.C.

ENGLISH STANDARD DRAWING FOR
METAL POLE FOUNDATIONS
REINFORCING CAGE DETAILS

SHEET 1 OF 2
1742.01

STATE OF NORTH CAROLINA
DEPT. OF TRANSPORTATION
DIVISION OF HIGHWAYS
RALEIGH, N.C.

ENGLISH STANDARD DRAWING FOR
METAL POLE FOUNDATIONS
INSTALLATION DETAILS

SHEET 2 OF 2
1742.01

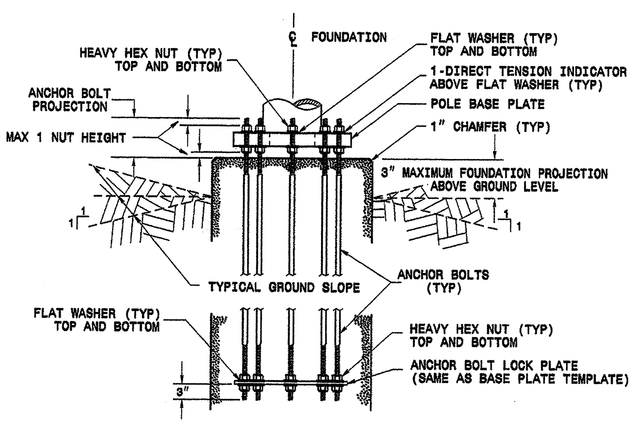

TYPICAL FOUNDATION
ANCHOR BOLT DETAILS
REINFORCING CAGE NOT SHOWN FOR CLARITY

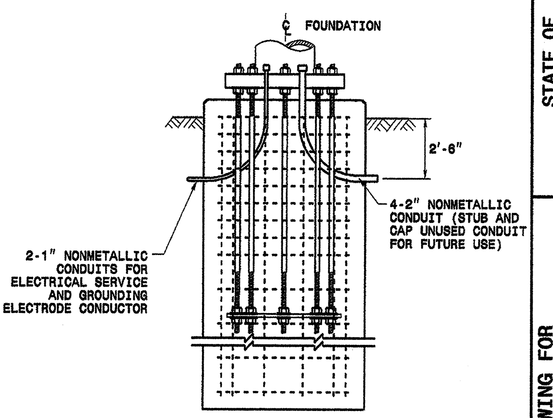

TYPICAL FOUNDATION
CONDUIT DETAILS

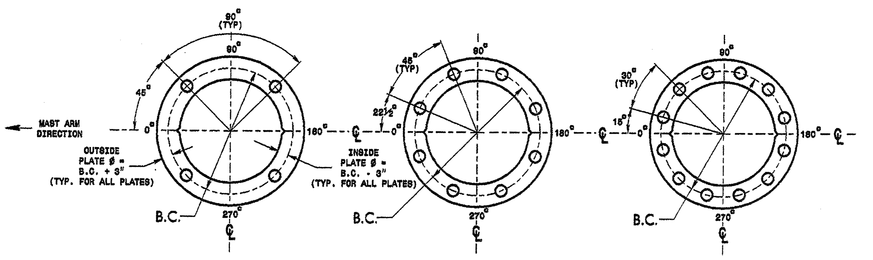

FOR 4 BOLT BASE PLATE FOR 8 BOLT BASE PLATE FOR 12 BOLT BASE PLATE

CONSTRUCT TEMPLATES AND PLATES FROM ⅜" THICK STEEL. GALVANIZING IS NOT REQUIRED.

BASE PLATE TEMPLATE AND ANCHOR BOLT LOCK PLATE DETAILS

STATE OF NORTH CAROLINA
DEPT. OF TRANSPORTATION
DIVISION OF HIGHWAYS
RALEIGH, N.C.

ENGLISH STANDARD DRAWING FOR
METAL POLE FOUNDATIONS
INSTALLATION DETAILS

SHEET 2 OF 2
1742.01

Structural Engineer
DESIGNED: C. SARKAR
NORTH CAROLINA PROFESSIONAL SEAL 028094 ENGINEER
SIGNATURE
DATE 9.12.03

Electrical Engineer
NORTH CAROLINA PROFESSIONAL SEAL 15286 ENGINEER
SIGNATURE
DATE 9/18/03

Standard Drawings
Traffic Management and Signal Systems Unit
122 N. Midwood St., Raleigh, NC 27603

See Plate for Title

Original: 2002 Standards

PROJECT REFERENCE NO.	SHEET NO.
U-2408	S19.56

METAL POLE No. 1 and 2

PROJECT REFERENCE NO.	SHEET NO.
U-2408	SIG. 59

Design Loading for METAL POLE NO. 1

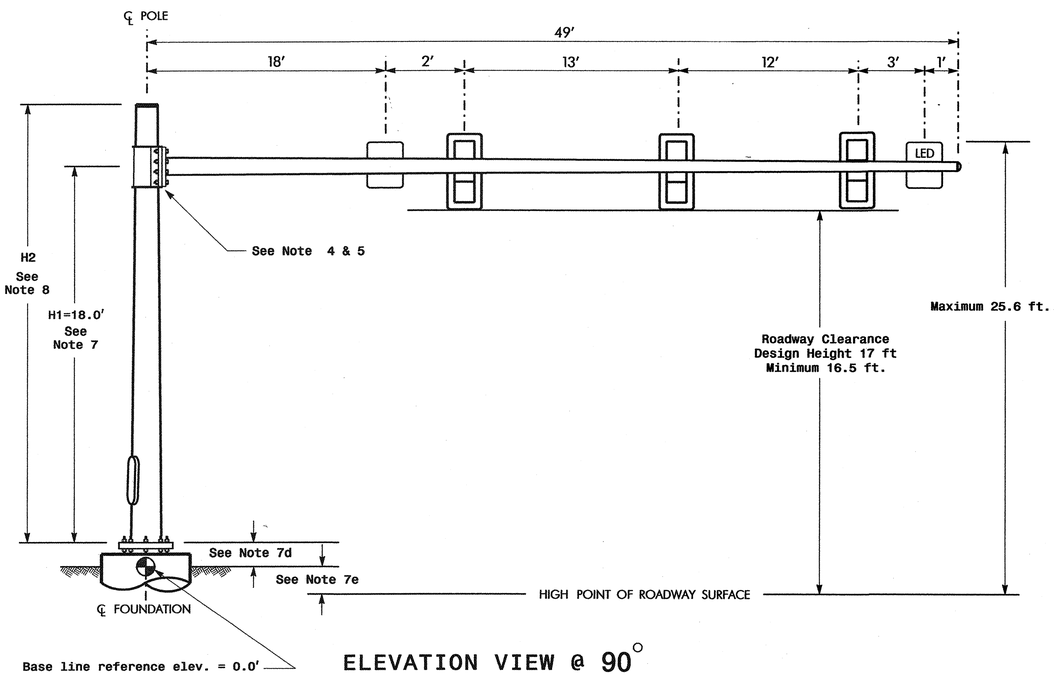

ELEVATION VIEW @ 90°

Design Loading for METAL POLE NO. 2

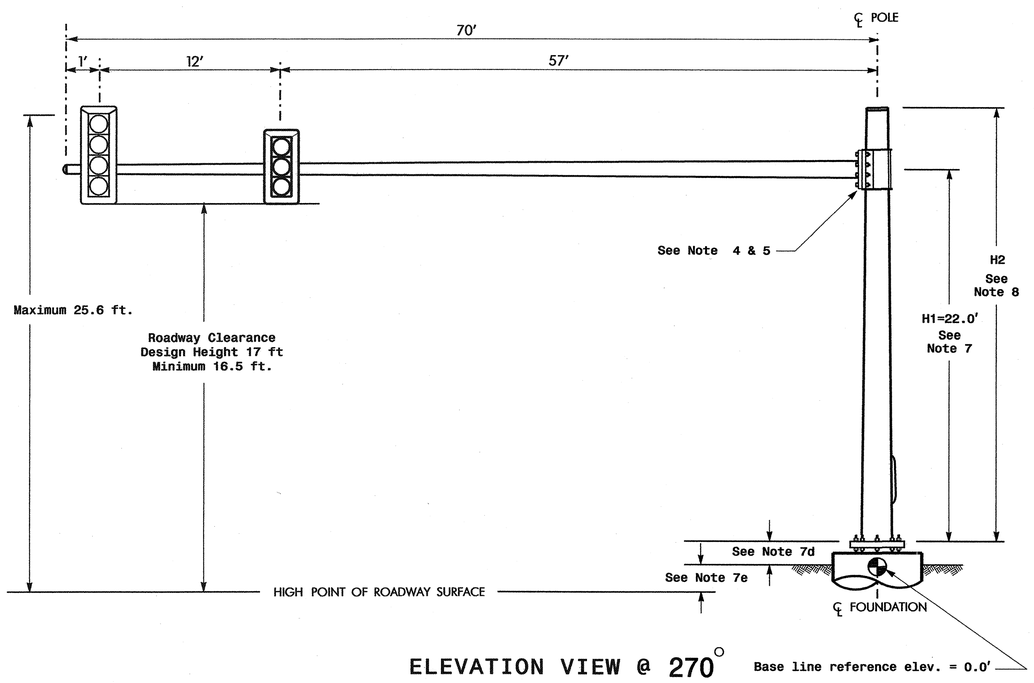

ELEVATION VIEW @ 270°

SPECIAL NOTE

The contractor is responsible for verifying that the mast arm attachment height (H1) will provide the "Design Height" clearance from the roadway before submitting final shop drawings for approval. Verify elevation data below which was obtained by field measurement or from available project survey data.

Elevation Data for Mast Arm Attachment (H1)

Elevation Differences for:	Pole 1	Pole 2
Baseline reference point at ℄ Foundation @ ground level	0.0 ft.	0.0 ft.
Elevation difference at High point of roadway surface	+0.65 ft.	-2.95 ft.
Elevation difference at Edge of travelway or face of curb	N/A	N/A

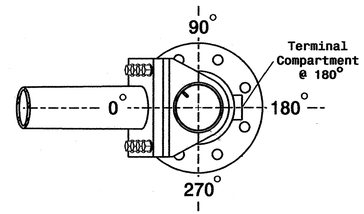

POLE RADIAL ORIENTATION

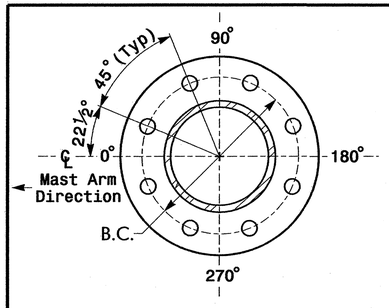

8 BOLT BASE PLATE DETAIL

See Note 6

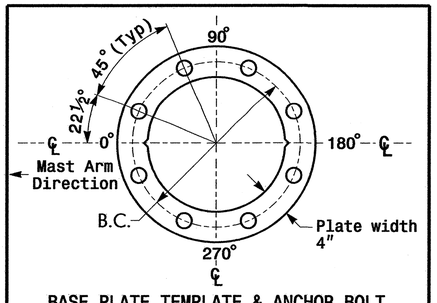

BASE PLATE TEMPLATE & ANCHOR BOLT LOCK PLATE DETAIL

For 8 Bolt Base Plate

MAST ARM LOADING SCHEDULE

LOADING SYMBOL	DESCRIPTION	AREA	SIZE	WEIGHT
LED	LED BLANKOUT SIGN RIGID MOUNTED WITH ASTRO-SIGN-BRAC	5.0 S.F.	24.0″ W X 36.0″ L	110 LBS
	SIGNAL HEAD 12″-4 SECTION-WITH BACKPLATE AND ASTRO-BRAC	11.5 S.F.	25.5″ W X 66.0″ L	74 LBS
	SIGNAL HEAD 12″-3 SECTION-WITH BACKPLATE AND ASTRO-BRAC	9.3 S.F.	25.5″ W X 52.5″ L	60 LBS
	SIGN RIGID MOUNTED WITH ASTRO-SIGN-BRAC	5.0 S.F.	24.0″ W X 30.0″ L	11 LBS

NOTES

Design Reference Material

1. Design the traffic signal structure and foundation in accordance with:
   - The 4th Edition 2001 AASHTO "Standard Specifications for Structural Supports for Highway Signs, Luminaires, and Traffic Signals, including all of the latest interim revisions.
   - The 2002 NCDOT "Standard Specifications for Roads and Structures". The latest addenda to these specifications can be found in the traffic signal project special provisions.
   - The 2002 NCDOT Roadway Standard Drawings.
   - The traffic signal project plans and special provisions.
   - The NCDOT "Metal Pole Standards" located at the following NCDOT website: http://www.ncdot.org/doh/preconstruct/traffic/tmssu/ws/mpoles/poles.htm

Design Requirements

2. Design the traffic signal structure using the loading conditions shown in the elevation views. These are anticipated worst case "Design loads" and may not represent the actual loads that will be applied at the time of the installation. The contractor should refer to the traffic signal plans for the actual loads that will be applied at the time of the installation.
3. Maximum allowable CSR for all signal supports is 0.9.
4. The camber design for mast arm deflection should provide an appearance of a low pitched arch where the tip or the free end of the mast arm does not deflect below horizontal when fully loaded.
5. A clamp-type bolted mast arm-to-pole connection may be used instead of the welded ring stiffened box connection shown as long as the connection meets all of the design requirements. This is a high strength connection. Use Direct Tension Indicators (ASTM F959) for each bolt.
6. Design base plate with 8 anchor bolt holes. Provide 2 inch x 66 inch anchor bolts.
7. The mast arm attachment height (H1) shown is based on the following design assumptions:
   a. Mast arm slope and deflection are not considered in determining the arm attachment height as they are assumed to offset each other.
   b. Signal heads attached to the mast arm are rigid mounted and vertically centered on the arm.
   c. The roadway clearance height for design is as shown in the elevation views.
   d. The top of the pole base plate is .75 feet above the ground elevation.
   e. Refer to the Elevation Data chart for elevation differences between the proposed foundation ground level and the high point on the roadway.
8. The pole manufacturer will determine the total height (H2) of each pole using the greater of the following:
   - Mast arm attachment height (H1) plus 2 feet, or
   - H1 plus ½ of the total height of the mast arm attachment assembly plus 1 foot.
9. If pole location adjustments are required, the contractor must gain approval from the engineer as this may affect the mast arm lengths and arm attachment heights. The contractor may contact the Signals & Geometrics Structural Engineer for assistance at (919) 733-3915.
10. The contractor is responsible for verifying that the mast arm length shown will allow proper positioning of the signal heads over the roadway.
11. The contractor is responsible for providing soil penetration testing data (SPT) to the pole manufacturer so site specific foundations can be designed.

NCDOT Windzone 4 (90 mph)

Prepared in the Offices of:
Traffic Engineering and Safety Systems Branch
Signals and Geometrics Section
122 N. McDowell St., Raleigh, NC 27603

N.C. 274 (BESSEMER CITY ROAD)
AT
N.C. 275 (DALLAS-BESSEMER CITY RD)
AND SR 1312 (OATES RD)
DIVISION 12 GASTON COUNTY GASTONIA

PLAN DATE:	March 2006	REVIEWED BY:	Z.W. Little, PE
PREPARED BY:	C. Pierce	REVIEWED BY:	D. Y. Ishak

REVISIONS	INIT.	DATE

SCALE 0 N/A N/A

SEAL
NORTH CAROLINA PROFESSIONAL SEAL 22002 ENGINEER RICHARD E. MULLINAX
SIGNATURE DATE
7 MARCH 2006
SIG. INVENTORY NO. 12-0012

07-MAR-2006 09:08
s:\its signalsworkgroups\trip projects\u-2408\mast arms\metric_design_loading_single_mast_arm.dgn
ceplerce

PROJECT REFERENCE NO.	SHEET NO.
U-2408	SIG. 60

METAL POLE No. 3 and 4

Design Loading for METAL POLE NO. 3

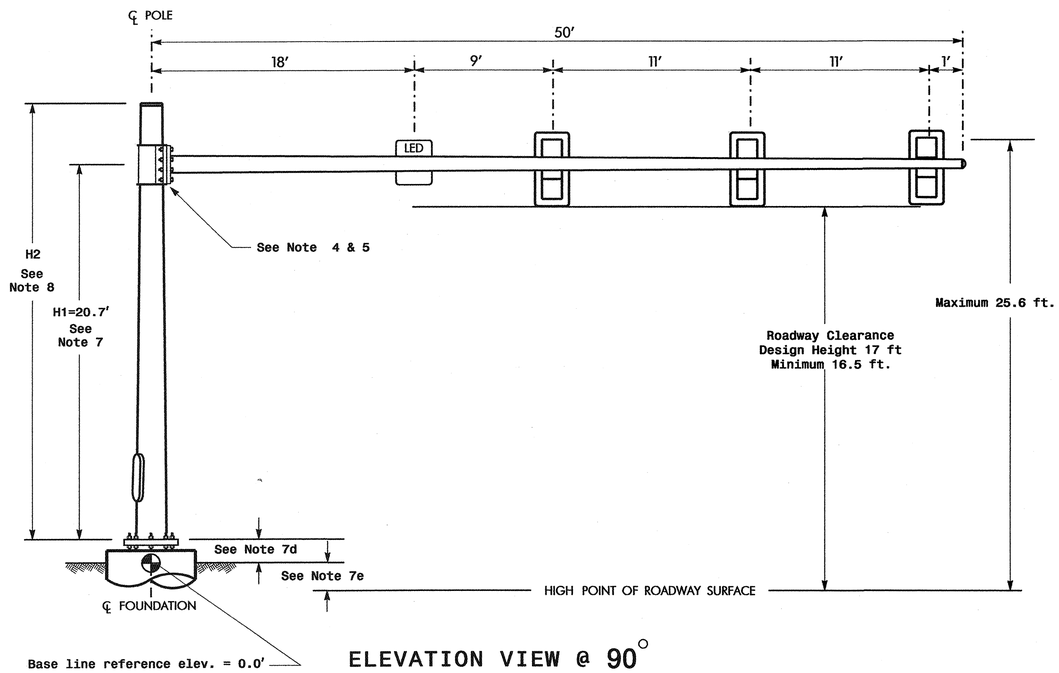

ELEVATION VIEW @ 90°

Design Loading for METAL POLE NO. 4

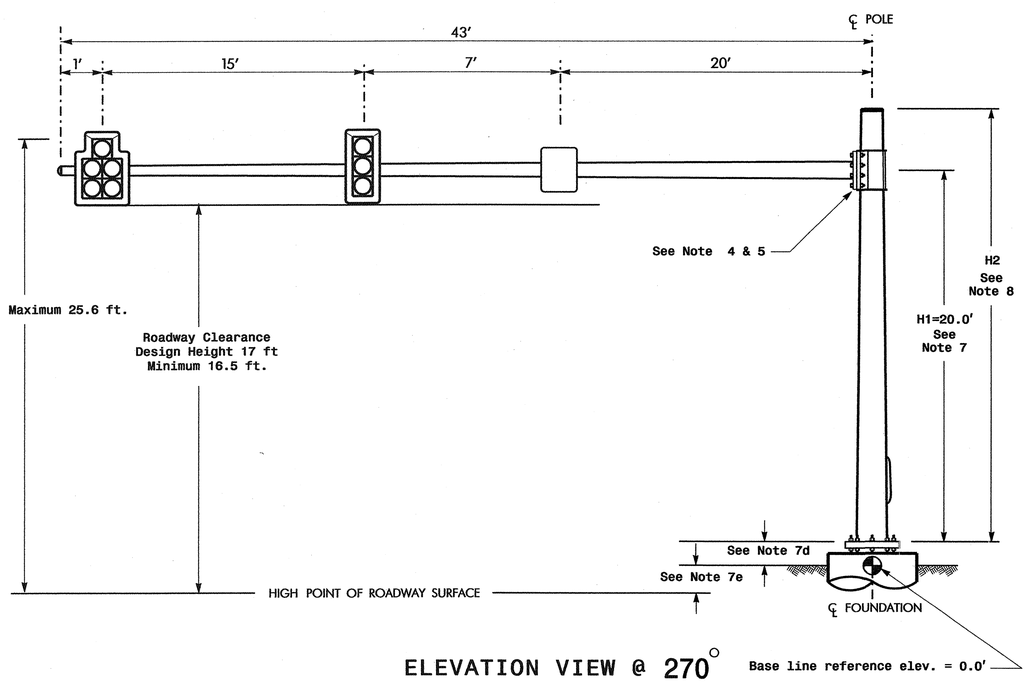

ELEVATION VIEW @ 270°

SPECIAL NOTE

The contractor is responsible for verifying that the mast arm attachment height (H1) will provide the "Design Height" clearance from the roadway before submitting final shop drawings for approval. Verify elevation data below which was obtained by field measurement or from available project survey data.

Elevation Data for Mast Arm Attachment (H1)

Elevation Differences for:	Pole 3	Pole 4
Baseline reference point at ℄ Foundation @ ground level	0.0 ft.	0.0 ft.
Elevation difference at High point of roadway surface	-1.97ft.	-1.31ft.
Elevation difference at Edge of travelway or face of curb	N/A	N/A

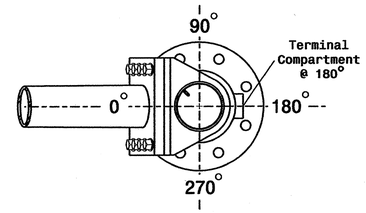

POLE RADIAL ORIENTATION

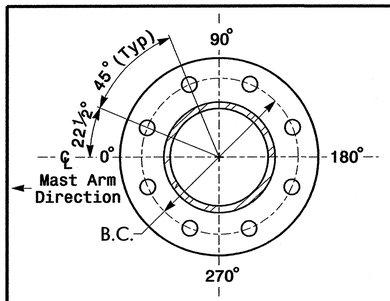

8 BOLT BASE PLATE DETAIL

See Note 6

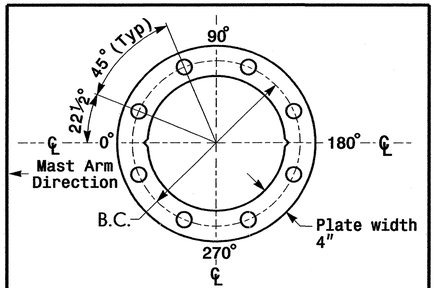

BASE PLATE TEMPLATE & ANCHOR BOLT LOCK PLATE DETAIL

For 8 Bolt Base Plate

MAST ARM LOADING SCHEDULE

LOADING SYMBOL	DESCRIPTION	AREA	SIZE	WEIGHT
LED	LED BLANKOUT SIGN RIGID MOUNTED WITH ASTRO-SIGN-BRAC	5.0 S.F.	24.0" W X 36.0" L	110 LBS
	SIGNAL HEAD 12"-3 SECTION-WITH BACKPLATE AND ASTRO-BRAC	9.3 S.F.	25.5" W X 52.5" L	60 LBS
	SIGNAL HEAD 12"-5 SECTION-WITH BACKPLATE AND ASTRO-BRAC	16.3 S.F.	42.0" W X 56.0" L	103 LBS
	SIGN RIGID MOUNTED WITH ASTRO-SIGN-BRAC	5.0 S.F.	24.0" W X 30.0" L	11 LBS

NOTES

Design Reference Material

1. Design the traffic signal structure and foundation in accordance with:
   - The 4th Edition 2001 AASHTO "Standard Specifications for Structural Supports for Highway Signs, Luminaires, and Traffic Signals, including all of the latest interim revisions.
   - The 2002 NCDOT "Standard Specifications for Roads and Structures". The latest addenda to these specifications can be found in the traffic signal project special provisions.
   - The 2002 NCDOT Roadway Standard Drawings.
   - The traffic signal project plans and special provisions.
   - The NCDOT "Metal Pole Standards" located at the following NCDOT website: http://www.ncdot.org/doh/preconstruct/traffic/tmssu/ws/mpoles/poles.htm

Design Requirements

2. Design the traffic signal structure using the loading conditions shown in the elevation views. These are anticipated worst case "Design loads" and may not represent the actual loads that will be applied at the time of the installation. The contractor should refer to the traffic signal plans for the actual loads that will be applied at the time of the installation.
3. Maximum allowable CSR for all signal supports is 0.9.
4. The camber design for mast arm deflection should provide an appearance of a low pitched arch where the tip or the free end of the mast arm does not deflect below horizontal when fully loaded.
5. A clamp-type bolted mast arm-to-pole connection may be used instead of the welded ring stiffened box connection shown as long as the connection meets all of the design requirements. This is a high strength connection. Use Direct Tension Indicators (ASTM F959) for each bolt.
6. Design base plate with 8 anchor bolt holes. Provide 2 inch x 66 inch anchor bolts.
7. The mast arm attachment height (H1) shown is based on the following design assumptions:
   a. Mast arm slope and deflection are not considered in determining the arm attachment height as they are assumed to offset each other.
   b. Signal heads attached to the mast arm are rigid mounted and vertically centered on the arm.
   c. The roadway clearance height for design is as shown in the elevation views.
   d. The top of the pole base plate is .75 feet above the ground elevation.
   e. Refer to the Elevation Data chart for elevation differences between the proposed foundation ground level and the high point on the roadway.
8. The pole manufacturer will determine the total height (H2) of each pole using the greater of the following:
   - Mast arm attachment height (H1) plus 2 feet, or
   - H1 plus ½ of the total height of the mast arm attachment assembly plus 1 foot.
9. If pole location adjustments are required, the contractor must gain approval from the engineer as this may affect the mast arm lengths and arm attachment heights. The contractor may contact the Signals & Geometrics Structural Engineer for assistance at (919) 733-3915.
10. The contractor is responsible for verifying that the mast arm length shown will allow proper positioning of the signal heads over the roadway.
11. The contractor is responsible for providing soil penetration testing data (SPT) to the pole manufacturer so site specific foundations can be designed.

NCDOT Windzone 4 (90 mph)

Prepared in the Offices of: Traffic Engineering and Signal Design Section, Traffic Signal Structure Section, Traffic Engineering Branch, Division of Highways, State of North Carolina, Department of Transportation, Public Transportation and Geometrics Section
1122 N. McDowell St., Raleigh, NC 27603

SCALE 0 N/A N/A

N.C. 274 (BESSEMER CITY ROAD)
AT
N.C. 275 (DALLAS-BESSEMER CITY RD)
AND SR 1312 (OATES RD)

DIVISION 12 GASTON COUNTY GASTONIA

PLAN DATE:	March 2006	REVIEWED BY:	Z.M. Little PE
PREPARED BY:	C. Pierce	REVIEWED BY:	D.Y. Ishak

REVISIONS	INIT.	DATE

SEAL

NORTH CAROLINA PROFESSIONAL SEAL 22820 ENGINEER RICHARD E. MULLINIX

SIGNATURE DATE 7 March 2006

SIG. INVENTORY NO. 12-0012

07-MAR-2006 09:09
s:\ffs\signalswork\groups\trip projects\u-2408\mast arms\metric_design_loading_single_mast_arm.dgn
cepierce

METAL POLE No. 5 and 6

PROJECT REFERENCE NO.	SHEET NO.
U-2408	SIG.61

Design Loading for METAL POLE NO. 5

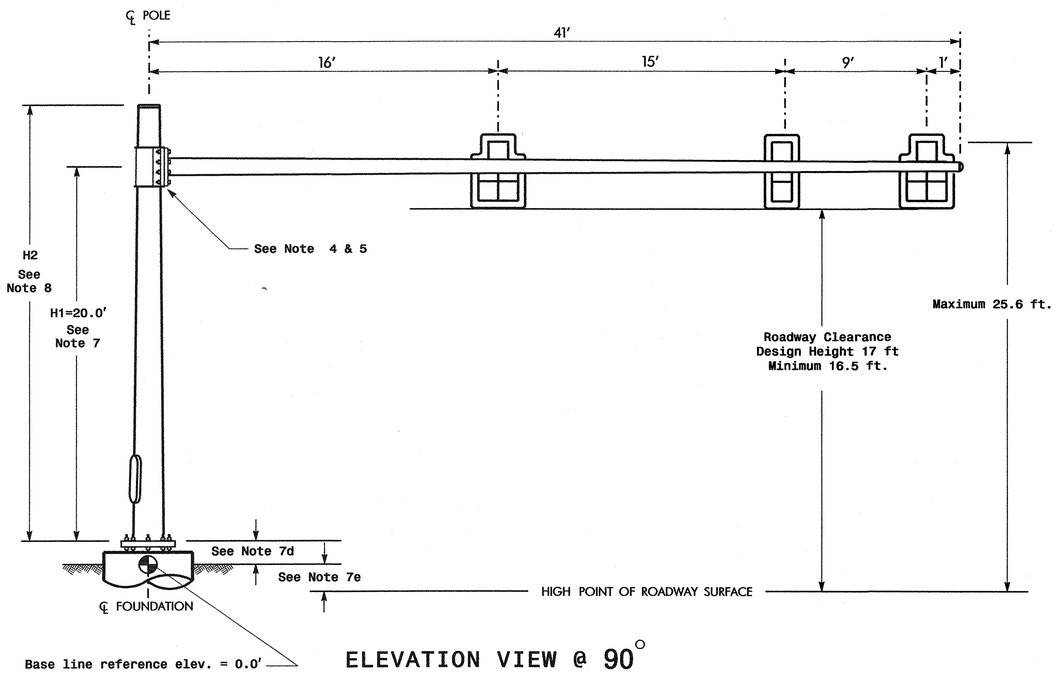

ELEVATION VIEW @ 90°

Design Loading for METAL POLE NO. 6

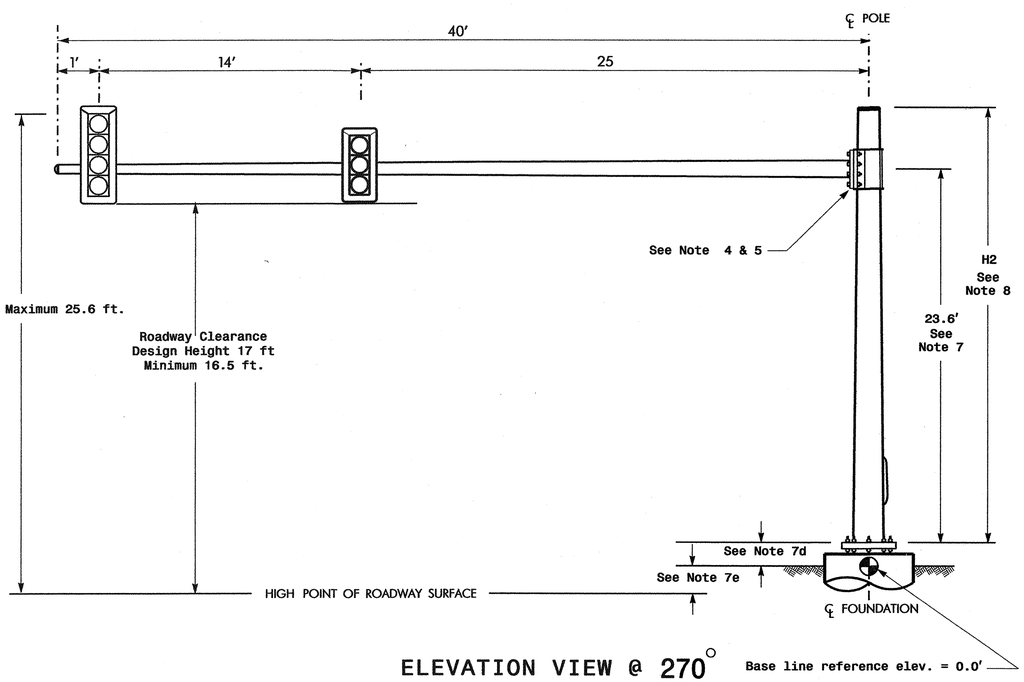

ELEVATION VIEW @ 270°

SPECIAL NOTE

The contractor is responsible for verifying that the mast arm attachment height (H1) will provide the "Design Height" clearance from the roadway before submitting final shop drawings for approval. Verify elevation data below which was obtained by field measurement or from available project survey data.

Elevation Data for Mast Arm Attachment (H1)

Elevation Differences for:	Pole 5	Pole 6
Baseline reference point at ℄ Foundation @ ground level	0.0 ft.	0.0 ft.
Elevation difference at High point of roadway surface	-1.48 ft.	-4.59 ft.
Elevation difference at Edge of travelway or face of curb	N/A	N/A

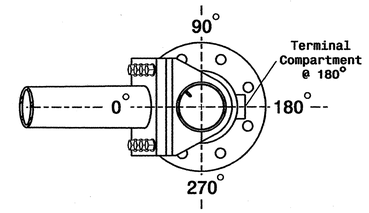

POLE RADIAL ORIENTATION

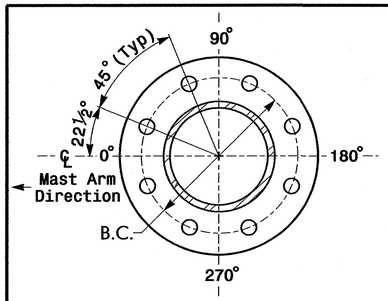

8 BOLT BASE PLATE DETAIL

See Note 6

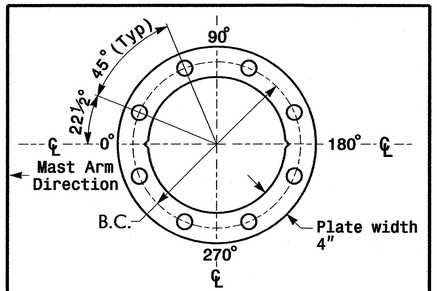

BASE PLATE TEMPLATE & ANCHOR BOLT LOCK PLATE DETAIL

For 8 Bolt Base Plate

MAST ARM LOADING SCHEDULE

LOADING SYMBOL	DESCRIPTION	AREA	SIZE	WEIGHT
	SIGNAL HEAD 12"-4 SECTION-WITH BACKPLATE AND ASTRO-BRAC	11.5 S.F.	25.5" W X 66.0" L	74 LBS
	SIGNAL HEAD 12"-3 SECTION-WITH BACKPLATE AND ASTRO-BRAC	9.3 S.F.	25.5" W X 52.5" L	60 LBS
	SIGNAL HEAD 12"-5 SECTION-WITH BACKPLATE AND ASTRO-BRAC	16.3 S.F.	42.0" W X 56.0" L	103 LBS

NOTES

Design Reference Material

1. Design the traffic signal structure and foundation in accordance with:
   - The 4th Edition 2001 AASHTO "Standard Specifications for Structural Supports for Highway Signs, Luminaires, and Traffic Signals, including all of the latest interim revisions.
   - The 2002 NCDOT "Standard Specifications for Roads and Structures". The latest addenda to these specifications can be found in the traffic signal project special provisions.
   - The 2002 NCDOT Roadway Standard Drawings.
   - The traffic signal project plans and special provisions.
   - The NCDOT "Metal Pole Standards" located at the following NCDOT website: http://www.ncdot.org/doh/preconstruct/traffic/tmssu/ws/mpoles/poles.htm

Design Requirements

2. Design the traffic signal structure using the loading conditions shown in the elevation views. These are anticipated worst case "Design loads" and may not represent the actual loads that will be applied at the time of the installation. The contractor should refer to the traffic signal plans for the actual loads that will be applied at the time of the installation.
3. Maximum allowable CSR for all signal supports is 0.9.
4. The camber design for mast arm deflection should provide an appearance of a low pitched arch where the tip or the free end of the mast arm does not deflect below horizontal when fully loaded.
5. A clamp-type bolted mast arm-to-pole connection may be used instead of the welded ring stiffened box connection shown as long as the connection meets all of the design requirements. This is a high strength connection. Use Direct Tension Indicators (ASTM F959) for each bolt.
6. Design base plate with 8 anchor bolt holes. Provide 2 inch x 66 inch anchor bolts.
7. The mast arm attachment height (H1) shown is based on the following design assumptions:
   a. Mast arm slope and deflection are not considered in determining the arm attachment height as they are assumed to offset each other.
   b. Signal heads attached to the mast arm are rigid mounted and vertically centered on the arm.
   c. The roadway clearance height for design is as shown in the elevation views.
   d. The top of the pole base plate is .75 feet above the ground elevation.
   e. Refer to the Elevation Data chart for elevation differences between the proposed foundation ground level and the high point on the roadway.
8. The pole manufacturer will determine the total height (H2) of each pole using the greater of the following:
   - Mast arm attachment height (H1) plus 2 feet, or
   - H1 plus ½ of the total height of the mast arm attachment assembly plus 1 foot.
9. If pole location adjustments are required, the contractor must gain approval from the engineer as this may affect the mast arm lengths and arm attachment heights. The contractor may contact the Signals & Geometrics Structural Engineer for assistance at (919) 733-3915.
10. The contractor is responsible for verifying that the mast arm length shown will allow proper positioning of the signal heads over the roadway.
11. The contractor is responsible for providing soil penetration testing data (SPT) to the pole manufacturer so site specific foundations can be designed.

NCDOT Windzone 4 (90 mph)

Prepared in the Offices of: Traffic Engineering and Safety Systems Branch, Signals and Geometric Section, Division of Highways, Department of Transportation, State of North Carolina, 122 N. McDowell St., Raleigh, NC 27603

N.C. 274 (BESSEMER CITY ROAD)
AT
SR 1351 (ISLEY DRIVE)

DIVISION 12 GASTON COUNTY GASTONIA

PLAN DATE:	March 2006	REVIEWED BY:	Z.W. Little PE
PREPARED BY:	C. Pierce	REVIEWED BY:	D.Y. Ishak

SCALE 0 N/A N/A

REVISIONS	INIT.	DATE

SEAL: NORTH CAROLINA PROFESSIONAL SEAL 19021 ENGINEER RICHARD E. MULLINAX

SIGNATURE DATE 7 March 2006

SIG. INVENTORY NO. 12-0234

07-MAR-2006 09:10
c:\pts\groups\ecs\projects\u-2408\mast arm\metric_design_loading_single_mast_arm.dgn
cesiberca

METAL POLE No. 7

Design Loading for METAL POLE NO. 7, MAST ARM A

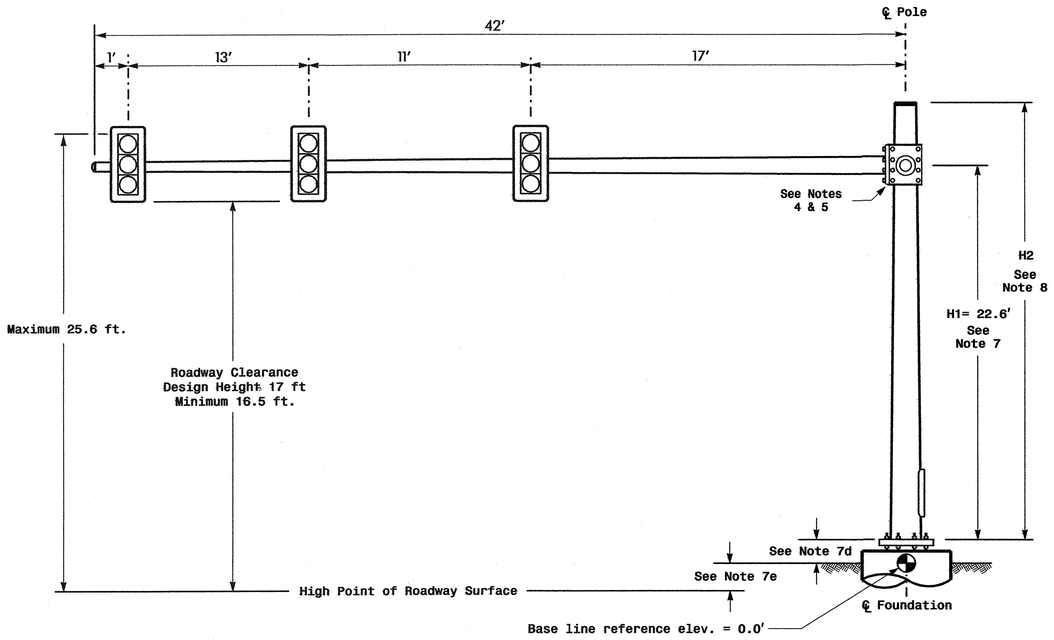

Elevation View @ 270°

Design Loading for METAL POLE NO. 7, MAST ARM B

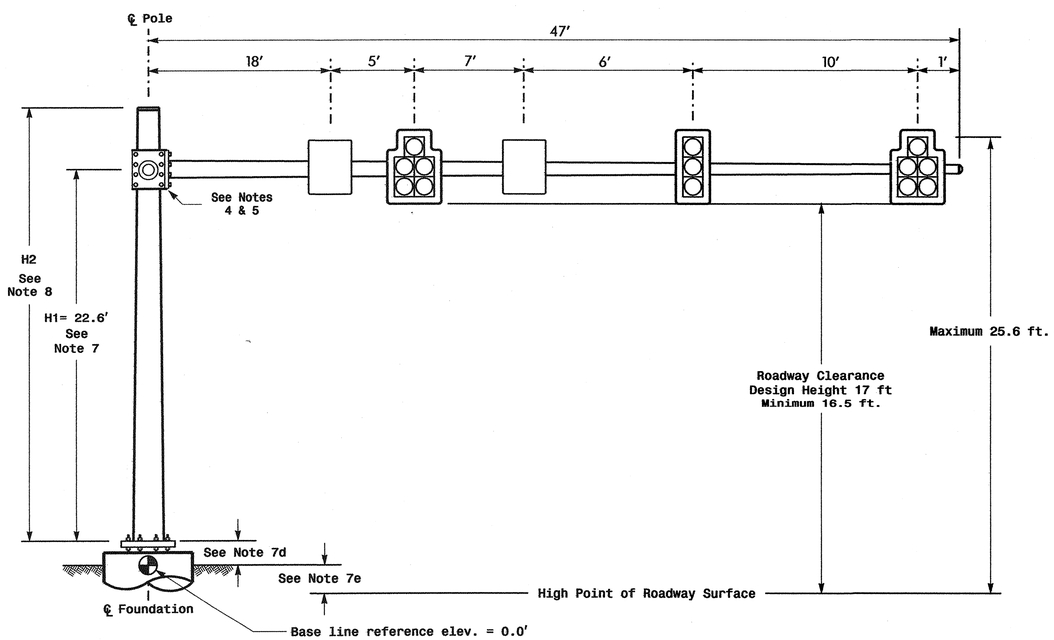

Elevation View @ 0°

SPECIAL NOTE

The contractor is responsible for verifying that the mast arm attachment height (H1) will provide the "Design Height" clearance from the roadway before submitting final shop drawings for approval. Verify elevation data below which was obtained by field measurement or from available project survey data.

Elevation Data for Mast Arm Attachment (H1)

Elevation Differences for:	Arm "A"	Arm "B"
Baseline reference point at ℄ Foundation @ ground level	0.0 ft.	0.0 ft.
Elevation difference at High point of roadway surface	-4.10 ft.	-4.10 ft.
Elevation difference at Edge of travelway or face of curb	N/A	N/A

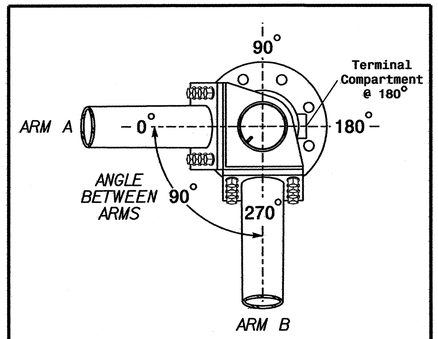

POLE RADIAL ORIENTATION

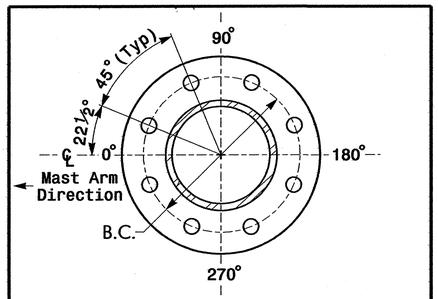

8 BOLT BASE PLATE DETAIL

See Note 6

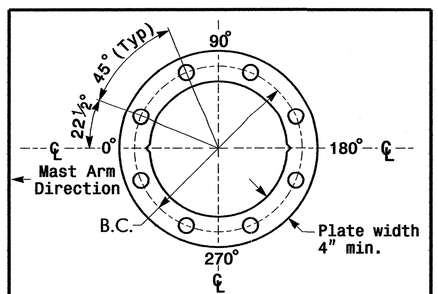

BASE PLATE TEMPLATE & ANCHOR BOLT LOCK PLATE DETAIL

For 8 Bolt Base Plate

MAST ARM LOADING SCHEDULE

LOADING SYMBOL	DESCRIPTION	AREA	SIZE	WEIGHT
	SIGNAL HEAD 12"-5 SECTION-WITH BACKPLATE AND ASTRO-BRAC	16.3 S.F.	42.0" W X 56.0" L	103 LBS
	SIGNAL HEAD 12"-3 SECTION-WITH BACKPLATE AND ASTRO-BRAC	9.3 S.F.	25.5" W X 52.5" L	60 LBS
	SIGN RIGID MOUNTED WITH ASTRO-SIGN-BRAC	5.0 S.F.	24.0" W X 30.0" L	11 LBS

NOTES

Design Reference Material

1. Design the traffic signal structure and foundation in accordance with:
   - The 4th Edition 2001 AASHTO "Standard Specifications for Structural Supports for Highway Signs, Luminaires, and Traffic Signals, including all of the latest interim revisions.
   - The 2002 NCDOT "Standard Specifications for Roads and Structures". The latest addenda to these specifications can be found in the traffic signal project special provisions.
   - The 2002 NCDOT Roadway Standard Drawings.
   - The traffic signal project plans and special provisions.
   - The NCDOT "Metal Pole Standards" located at the following NCDOT website: http://www.ncdot.org/doh/preconstruct/traffic/tmssu/ws/mpoles/poles.htm

Design Requirements

2. Design the traffic signal structure using the loading conditions shown in the elevation views. These are anticipated worst case "Design loads" and may not represent the actual loads that will be applied at the time of the installation. The contractor should refer to the traffic signal plans for the actual loads that will be applied at the time of the installation.
3. Maximum allowable CSR for all signal supports is 0.9.
4. The camber design for mast arm deflection should provide an appearance of a low pitched arch where the tip or the free end of the mast arm does not deflect below horizontal when fully loaded.
5. A clamp-type bolted mast arm-to-pole connection may be used instead of the welded ring stiffened box connection shown as long as the connection meets all of the design requirements. This requires staggering the connections. Use elevation data for each arm to determine appropriate arm connection points. The arm-to-pole attachment is a high strength connection. Use Direct Tension Indicators (ASTM F959) for each bolt.
6. Design base plate with 8 anchor bolt holes. Provide 2 inch x 66 inch anchor bolts.
7. The mast arm attachment height (H1) shown is based on the following design assumptions:
   a. Mast arm slope and deflection are not considered in determining the arm attachment height as they are assumed to offset each other.
   b. Signal heads attached to the mast arm are rigid mounted and vertically centered on the arm.
   c. The roadway clearance height for design is as shown in the elevation views.
   d. The top of the pole base plate is .75 feet above the ground elevation.
   e. Refer to the Elevation Data chart for elevation differences between the proposed foundation ground level and the high point on the roadway.
8. The pole manufacturer will determine the total height (H2) of the pole using the greater of the following:
   - Mast arm attachment height (H1) plus 2 feet, or
   - H1 plus ½ of the total height of the mast arm attachment assembly plus 1 foot.
9. If pole location adjustments are required, the contractor must gain approval from the engineer as this may affect the mast arm lengths and arm attachment heights. The contractor may contact the Signals & Geometrics Structural Engineer for assistance at (919) 733-3915.
10. The contractor is responsible for verifying that the mast arm lengths shown will allow proper positioning of the signal heads over the roadway.
11. The contractor is responsible for providing soil penetration testing data (SPT) to the pole manufacturer so site specific foundations can be designed.

NCDOT Wind Zone 4 (90 mph)

Prepared in the Offices of: Traffic Engineering and Safety Systems Branch, Signals and Geometrics Section, Department of Transportation, State of North Carolina
122 N. McDowell St., Raleigh, NC 27603

N.C. 274 (Bessemer City Road) at SR 1351 (Isley Drive)

Division 12 Gaston County Gastonia

PLAN DATE: March 2006		REVIEWED BY:	Z.M. Little
PREPARED BY: L. Blount		REVIEWED BY:	D.Y. Ishak

SCALE 0 N/A N/A

REVISIONS	INIT.	DATE

SEAL NORTH CAROLINA PROFESSIONAL SEAL 22821 RICHARD E. MULLINAX ENGINEER

SIGNATURE DATE

SIG. INVENTORY NO. 12-0234

03-MAR-2006 09:34
s:\traffic\signal\workgroups\trip projects\u-2408\mast arms\design loading double mast arm rev 1-27-06.dgn
(gryblount)

Design Loading for METAL POLE NO. 8

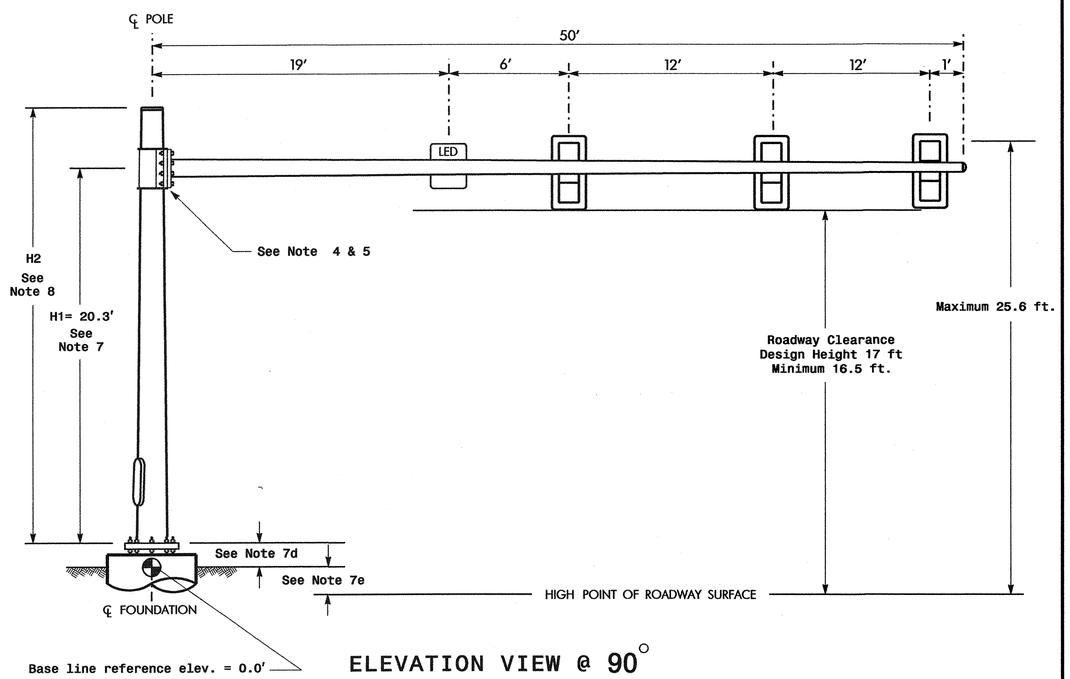

ELEVATION VIEW @ 90°

Design Loading for METAL POLE NO. 9

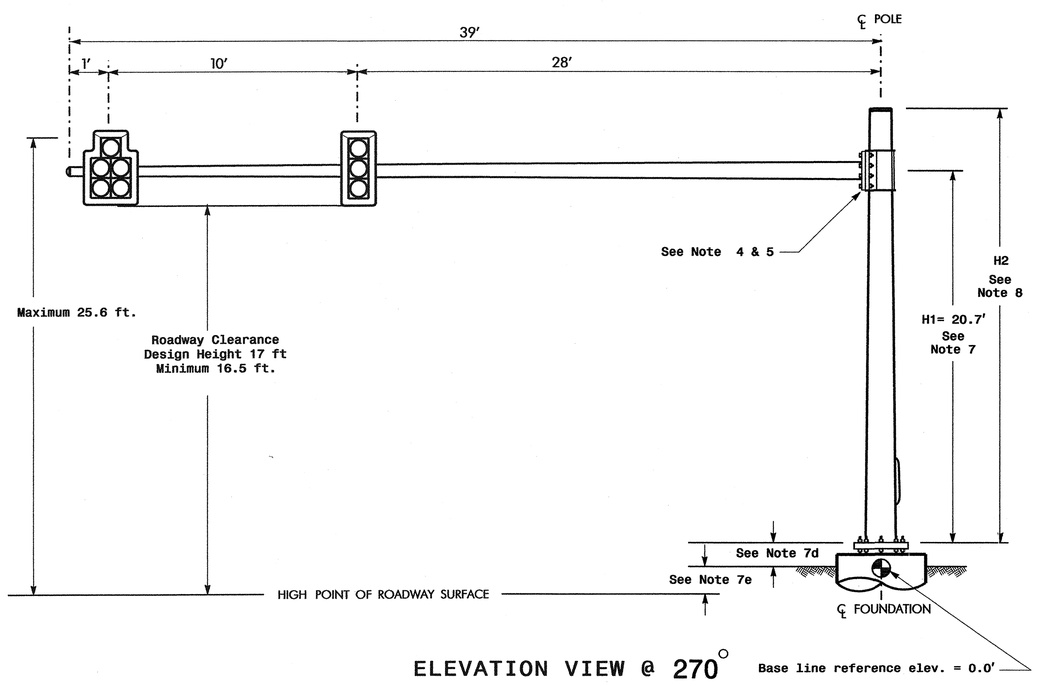

ELEVATION VIEW @ 270°

SPECIAL NOTE

The contractor is responsible for verifying that the mast arm attachment height (H1) will provide the "Design Height" clearance from the roadway before submitting final shop drawings for approval. Verify elevation data below which was obtained by field measurement or from available project survey data.

Elevation Data for Mast Arm Attachment (H1)

Elevation Differences for:	Pole 8	Pole 9
Baseline reference point at ℄ Foundation @ ground level	0.0 ft.	0.0 ft.
Elevation difference at High point of roadway surface	-1.80 ft.	+1.80 ft.
Elevation difference at Edge of travelway or face of curb	N/A	N/A

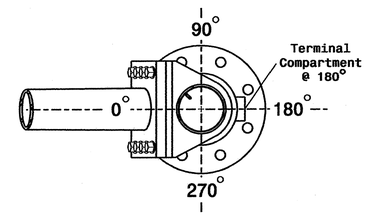

POLE RADIAL ORIENTATION

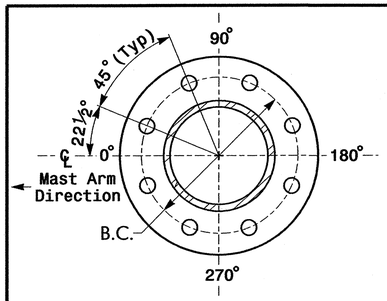

8 BOLT BASE PLATE DETAIL

See Note 6

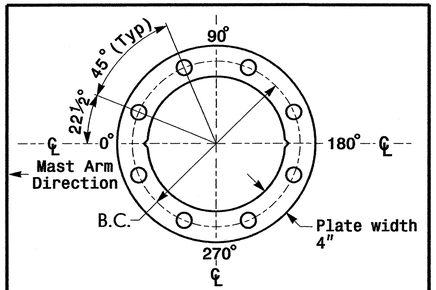

BASE PLATE TEMPLATE & ANCHOR BOLT LOCK PLATE DETAIL

For 8 Bolt Base Plate

MAST ARM LOADING SCHEDULE

LOADING SYMBOL	DESCRIPTION	AREA	SIZE	WEIGHT
LED	LED BLANKOUT SIGN RIGID MOUNTED WITH ASTRO-SIGN-BRAC	5.0 S.F.	24.0" W X 36.0" L	110 LBS
	SIGNAL HEAD 12"-5 SECTION-WITH BACKPLATE AND ASTRO-BRAC	16.3 S.F.	42.0" W X 56.0" L	103 LBS
	SIGNAL HEAD 12"-3 SECTION-WITH BACKPLATE AND ASTRO-BRAC	9.3 S.F.	25.5" W X 52.5" L	60 LBS

NOTES

Design Reference Material

1. Design the traffic signal structure and foundation in accordance with:
   - The 4th Edition 2001 AASHTO "Standard Specifications for Structural Supports for Highway Signs, Luminaires, and Traffic Signals, including all of the latest interim revisions.
   - The 2002 NCDOT "Standard Specifications for Roads and Structures". The latest addenda to these specifications can be found in the traffic signal project special provisions.
   - The 2002 NCDOT Roadway Standard Drawings.
   - The traffic signal project plans and special provisions.
   - The NCDOT "Metal Pole Standards" located at the following NCDOT website: http://www.ncdot.org/doh/preconstruct/traffic/tmssu/ws/mpoles/poles.htm

Design Requirements

2. Design the traffic signal structure using the loading conditions shown in the elevation views. These are anticipated worst case "Design loads" and may not represent the actual loads that will be applied at the time of the installation. The contractor should refer to the traffic signal plans for the actual loads that will be applied at the time of the installation.
3. Maximum allowable CSR for all signal supports is 0.9.
4. The camber design for mast arm deflection should provide an appearance of a low pitched arch where the tip or the free end of the mast arm does not deflect below horizontal when fully loaded.
5. A clamp-type bolted mast arm-to-pole connection may be used instead of the welded ring stiffened box connection shown as long as the connection meets all of the design requirements. This is a high strength connection. Use Direct Tension Indicators (ASTM F959) for each bolt.
6. Design base plate with 8 anchor bolt holes. Provide 2 inch x 66 inch anchor bolts.
7. The mast arm attachment height (H1) shown is based on the following design assumptions:
   a. Mast arm slope and deflection are not considered in determining the arm attachment height as they are assumed to offset each other.
   b. Signal heads attached to the mast arm are rigid mounted and vertically centered on the arm.
   c. The roadway clearance height for design is as shown in the elevation views.
   d. The top of the pole base plate is .75 feet above the ground elevation.
   e. Refer to the Elevation Data chart for elevation differences between the proposed foundation ground level and the high point on the roadway.
8. The pole manufacturer will determine the total height (H2) of each pole using the greater of the following:
   - Mast arm attachment height (H1) plus 2 feet, or
   - H1 plus ½ of the total height of the mast arm attachment assembly plus 1 foot.
9. If pole location adjustments are required, the contractor must gain approval from the engineer as this may affect the mast arm lengths and arm attachment heights. The contractor may contact the Signals & Geometrics Structural Engineer for assistance at (919) 733-3915.
10. The contractor is responsible for verifying that the mast arm length shown will allow proper positioning of the signal heads over the roadway.
11. The contractor is responsible for providing soil penetration testing data (SPT) to the pole manufacturer so site specific foundations can be designed.

NCDOT Windzone 4 (90 mph)

Prepared in the Offices of: Traffic Engineering and Safety Systems Branch, Signals and Geometrics Section, Traffic Engineering Unit, Division of Highways, State of North Carolina, Department of Transportation
122 N. McDowell St., Raleigh, NC 27603

SCALE 0 N/A N/A

N.C. 274 (BESSEMER CITY ROAD)
AT
SR 1334 (JENKINS DAIRY RD)
AND SR 1135 (SHANNON BRADLEY RD)
DIVISION 12 GASTON COUNTY GASTONIA

PLAN DATE: MARCH 2006	REVIEWED BY: Z.W. Little, PE
PREPARED BY: C. PIERCE	REVIEWED BY: D.Y. Ishak

REVISIONS	INIT.	DATE

SEAL — NORTH CAROLINA PROFESSIONAL SEAL ENGINEER RICHARD E. MULLINAX

SIGNATURE DATE

SIG. INVENTORY NO. 12-0335

07-MAR-2006 09:12
st+ts signals\workgroups\tip projects\u-2408\mast arms\metric_design_loading_single_mast_arm.dgn
cpierce

METAL POLE No. 10 and 11

Design Loading for METAL POLE NO. 10

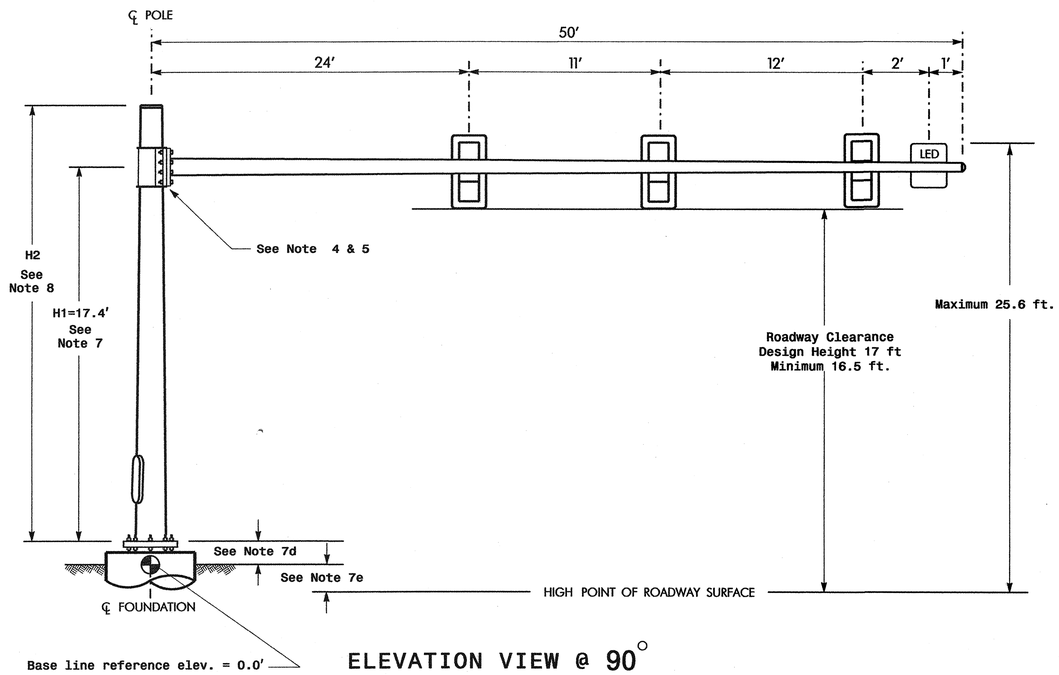

ELEVATION VIEW @ 90°

Design Loading for METAL POLE NO. 11

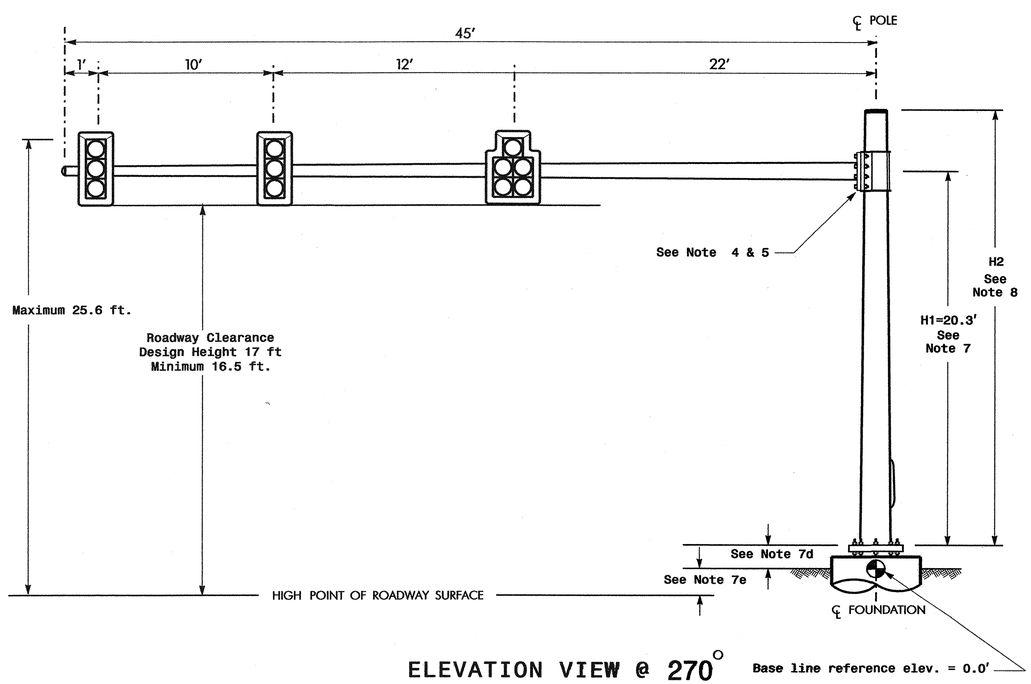

ELEVATION VIEW @ 270°

SPECIAL NOTE

The contractor is responsible for verifying that the mast arm attachment height (H1) will provide the "Design Height" clearance from the roadway before submitting final shop drawings for approval. Verify elevation data below which was obtained by field measurement or from available project survey data.

Elevation Data for Mast Arm Attachment (H1)

Elevation Differences for:	Pole 10	Pole 11
Baseline reference point at ℄ Foundation @ ground level	0.0 ft.	0.0 ft.
Elevation difference at High point of roadway surface	+1.31 ft.	-1.47 ft.
Elevation difference at Edge of travelway or face of curb	N/A	N/A

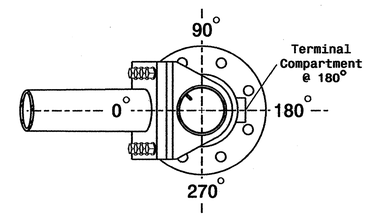

POLE RADIAL ORIENTATION

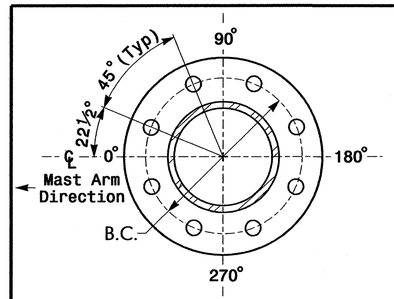

8 BOLT BASE PLATE DETAIL

See Note 6

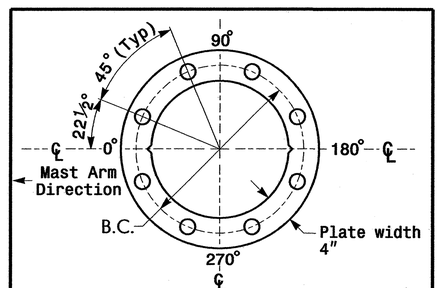

BASE PLATE TEMPLATE & ANCHOR BOLT LOCK PLATE DETAIL

For 8 Bolt Base Plate

MAST ARM LOADING SCHEDULE

LOADING SYMBOL	DESCRIPTION	AREA	SIZE	WEIGHT
LED	LED BLANKOUT SIGN RIGID MOUNTED WITH ASTRO-SIGN-BRAC	5.0 S.F.	24.0″ W X 36.0″ L	110 LBS
	SIGNAL HEAD 12″-5 SECTION-WITH BACKPLATE AND ASTRO-BRAC	16.3 S.F.	42.0″ W X 56.0″ L	103 LBS
	SIGNAL HEAD 12″-3 SECTION-WITH BACKPLATE AND ASTRO-BRAC	9.3 S.F.	25.5″ W X 52.5″ L	60 LBS

NOTES

Design Reference Material

1. Design the traffic signal structure and foundation in accordance with:
   - The 4th Edition 2001 AASHTO "Standard Specifications for Structural Supports for Highway Signs, Luminaires, and Traffic Signals, including all of the latest interim revisions.
   - The 2002 NCDOT "Standard Specifications for Roads and Structures". The latest addenda to these specifications can be found in the traffic signal project special provisions.
   - The 2002 NCDOT Roadway Standard Drawings.
   - The traffic signal project plans and special provisions.
   - The NCDOT "Metal Pole Standards" located at the following NCDOT website: http://www.ncdot.org/doh/preconstruct/traffic/tmssu/ws/mpoles/poles.htm

Design Requirements

2. Design the traffic signal structure using the loading conditions shown in the elevation views. These are anticipated worst case "Design loads" and may not represent the actual loads that will be applied at the time of the installation. The contractor should refer to the traffic signal plans for the actual loads that will be applied at the time of the installation.
3. Maximum allowable CSR for all signal supports is 0.9.
4. The camber design for mast arm deflection should provide an appearance of a low pitched arch where the tip or the free end of the mast arm does not deflect below horizontal when fully loaded.
5. A clamp-type bolted mast arm-to-pole connection may be used instead of the welded ring stiffened box connection shown as long as the connection meets all of the design requirements. This is a high strength connection. Use Direct Tension Indicators (ASTM F959) for each bolt.
6. Design base plate with 8 anchor bolt holes. Provide 2 inch x 66 inch anchor bolts.
7. The mast arm attachment height (H1) shown is based on the following design assumptions:
   a. Mast arm slope and deflection are not considered in determining the arm attachment height as they are assumed to offset each other.
   b. Signal heads attached to the mast arm are rigid mounted and vertically centered on the arm.
   c. The roadway clearance height for design is as shown in the elevation views.
   d. The top of the pole base plate is .75 feet above the ground elevation.
   e. Refer to the Elevation Data chart for elevation differences between the proposed foundation ground level and the high point on the roadway.
8. The pole manufacturer will determine the total height (H2) of each pole using the greater of the following:
   - Mast arm attachment height (H1) plus 2 feet, or
   - H1 plus ½ of the total height of the mast arm attachment assembly plus 1 foot.
9. If pole location adjustments are required, the contractor must gain approval from the engineer as this may affect the mast arm lengths and arm attachment heights. The contractor may contact the Signals & Geometrics Structural Engineer for assistance at (919) 733-3915.
10. The contractor is responsible for verifying that the mast arm length shown will allow proper positioning of the signal heads over the roadway.
11. The contractor is responsible for providing soil penetration testing data (SPT) to the pole manufacturer so site specific foundations can be designed.

NCDOT Windzone 4 (90 mph)

Prepared in the Offices of: Traffic Engineering and Safety Systems Branch, Signals and Geometrics Section, Division of Highways, State of North Carolina, Department of Transportation, 122 N. McDowell St., Raleigh, NC 27603

N.C. 274 (BESSEMER CITY ROAD)
AT
SR 1334 (JENKINS DAIRY RD)
AND SR 1135 (SHANNON BRADLEY RD)

DIVISION 12 GASTON COUNTY GASTONIA

PLAN DATE:	MARCH 2006	REVIEWED BY:	Z.W. Little, PE
PREPARED BY:	C. PIERCE	REVIEWED BY:	D.Y. Ishak

SCALE 0 N/A N/A

REVISIONS	INIT.	DATE

SEAL — NORTH CAROLINA PROFESSIONAL SEAL 24202 ENGINEER RICHARD E. MULLINAX

SIGNATURE DATE

SIG. INVENTORY NO. 12-0335

07-MAR-2006 09:07
s:\traffic\signals\workgroups\ttp projects\u-2408\mast armsmetric_design_loading_single_mast_arm.dgn
cpierce

Design Loading for METAL POLE NO. 12, MAST ARM A

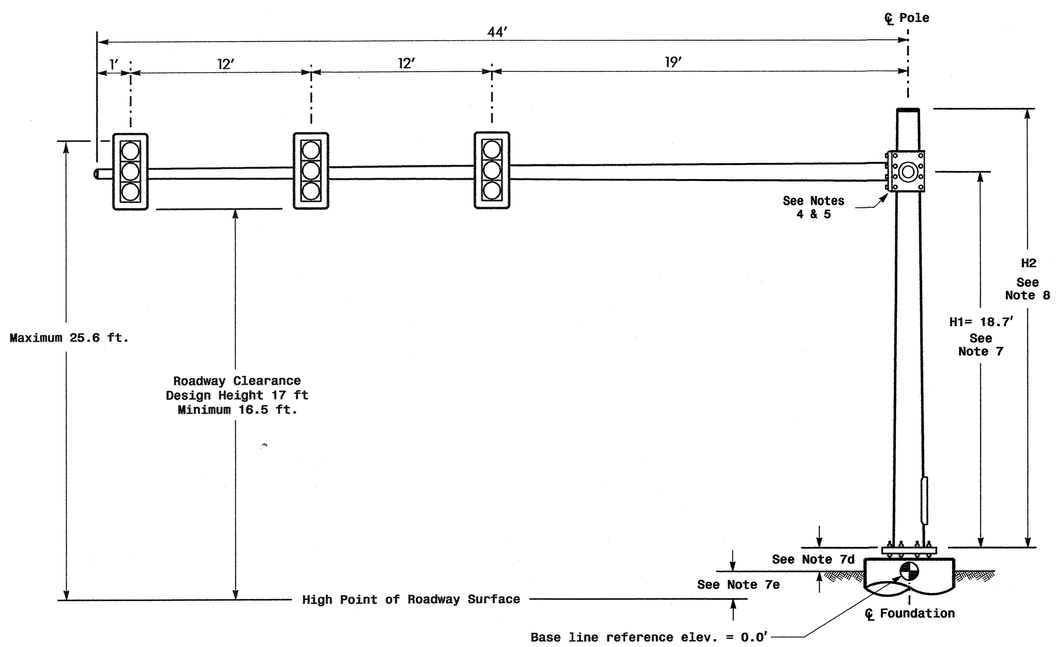

Elevation View @ 270°

Design Loading for METAL POLE NO. 12, MAST ARM B

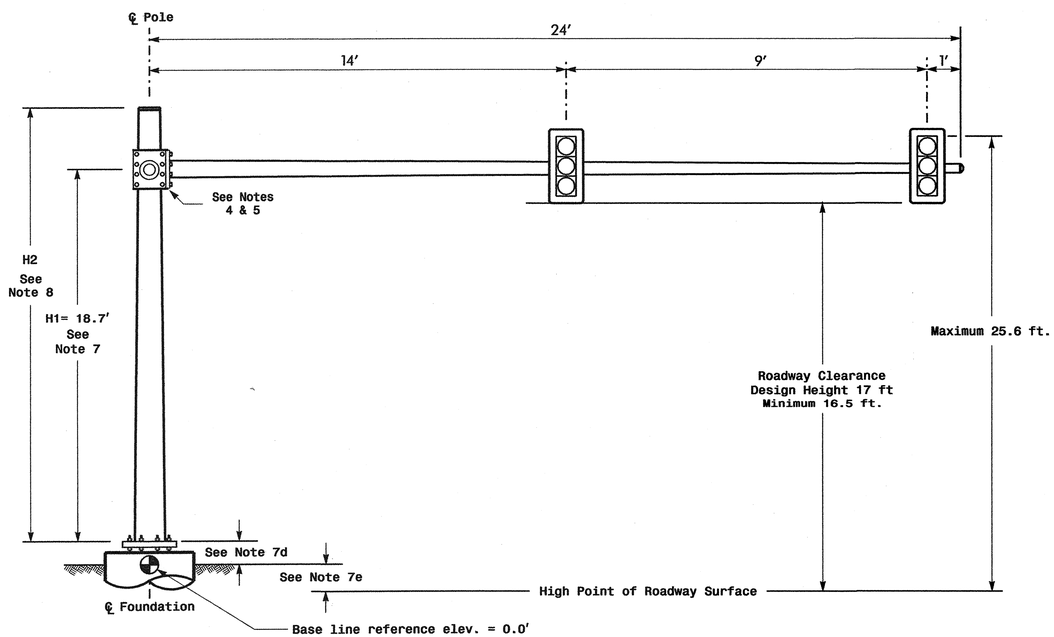

Elevation View @ 0°

SPECIAL NOTE

The contractor is responsible for verifying that the mast arm attachment height (H1) will provide the "Design Height" clearance from the roadway before submitting final shop drawings for approval. Verify elevation data below which was obtained by field measurement or from available project survey data.

Elevation Data for Mast Arm Attachment (H1)

Elevation Differences for:	Arm "A"	Arm "B"
Baseline reference point at ℄ Foundation @ ground level	0.0 ft.	0.0 ft.
Elevation difference at High point of roadway surface	0.0 ft.	0.0 ft.
Elevation difference at Edge of travelway or face of curb	N/A	N/A

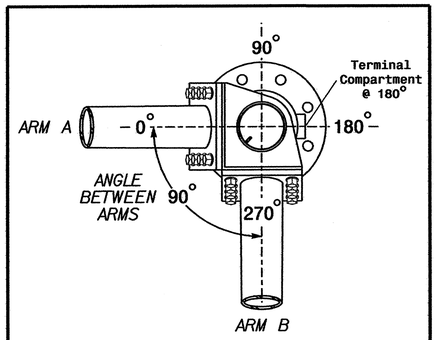

POLE RADIAL ORIENTATION

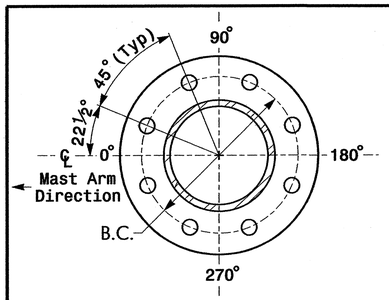

8 BOLT BASE PLATE DETAIL

See Note 6

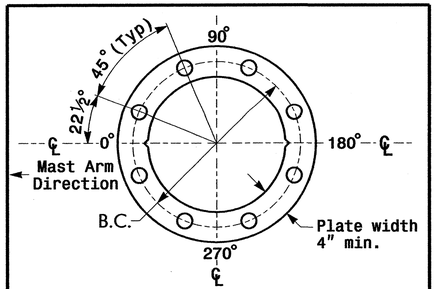

BASE PLATE TEMPLATE & ANCHOR BOLT LOCK PLATE DETAIL

For 8 Bolt Base Plate

METAL POLE No. 12

PROJECT REFERENCE NO.	SHEET NO.
U-2408	Sig.65

MAST ARM LOADING SCHEDULE

LOADING SYMBOL	DESCRIPTION	AREA	SIZE	WEIGHT
	SIGNAL HEAD 12"-3 SECTION-WITH BACKPLATE AND ASTRO-BRAC	9.3 S.F.	25.5" W X 52.5" L	60 LBS

NOTES

Design Reference Material

1. Design the traffic signal structure and foundation in accordance with:
   - The 4th Edition 2001 AASHTO "Standard Specifications for Structural Supports for Highway Signs, Luminaires, and Traffic Signals, including all of the latest interim revisions.
   - The 2002 NCDOT "Standard Specifications for Roads and Structures". The latest addenda to these specifications can be found in the traffic signal project special provisions.
   - The 2002 NCDOT Roadway Standard Drawings.
   - The traffic signal project plans and special provisions.
   - The NCDOT "Metal Pole Standards" located at the following NCDOT website: http://www.ncdot.org/doh/preconstruct/traffic/tmssu/ws/mpoles/poles.htm

Design Requirements

2. Design the traffic signal structure using the loading conditions shown in the elevation views. These are anticipated worst case "Design loads" and may not represent the actual loads that will be applied at the time of the installation. The contractor should refer to the traffic signal plans for the actual loads that will be applied at the time of the installation.
3. Maximum allowable CSR for all signal supports is 0.9.
4. The camber design for mast arm deflection should provide an appearance of a low pitched arch where the tip or the free end of the mast arm does not deflect below horizontal when fully loaded.
5. A clamp-type bolted mast arm-to-pole connection may be used instead of the welded ring stiffened box connection shown as long as the connection meets all of the design requirements. This requires staggering the connections. Use elevation data for each arm to determine appropriate arm connection points. The arm-to-pole attachment is a high strength connection. Use Direct Tension Indicators (ASTM F959) for each bolt.
6. Design base plate with 8 anchor bolt holes. Provide 2 inch x 66 inch anchor bolts.
7. The mast arm attachment height (H1) shown is based on the following design assumptions:
   a. Mast arm slope and deflection are not considered in determining the arm attachment height as they are assumed to offset each other.
   b. Signal heads attached to the mast arm are rigid mounted and vertically centered on the arm.
   c. The roadway clearance height for design is as shown in the elevation views.
   d. The top of the pole base plate is .75 feet above the ground elevation.
   e. Refer to the Elevation Data chart for elevation differences between the proposed foundation ground level and the high point on the roadway.
8. The pole manufacturer will determine the total height (H2) of the pole using the greater of the following:
   - Mast arm attachment height (H1) plus 2 feet, or
   - H1 plus ½ of the total height of the mast arm attachment assembly plus 1 foot.
9. If pole location adjustments are required, the contractor must gain approval from the engineer as this may affect the mast arm lengths and arm attachment heights. The contractor may contact the Signals & Geometrics Structural Engineer for assistance at (919) 733-3915.
10. The contractor is responsible for verifying that the mast arm lengths shown will allow proper positioning of the signal heads over the roadway.
11. The contractor is responsible for providing soil penetration testing data (SPT) to the pole manufacturer so site specific foundations can be designed.

NCDOT Wind Zone 4 (90 mph)

Prepared in the Offices of: Traffic Engineering and Safety Systems Branch, Signals and Geometrics Section, Department of Transportation, State of North Carolina
122 N. McDonald St., Raleigh, NC 27603

SCALE: 0 N/A N/A

N.C. 274 (Bessemer City Road) at I-85 Southbound Ramp And Loop

Division 12 Gaston County Gastonia

PLAN DATE:	March 2006	REVIEWED BY:	Z.W. Little
PREPARED BY:	L. Blount	REVIEWED BY:	D.Y. Ishak

REVISIONS	INIT.	DATE

SEAL: NORTH CAROLINA PROFESSIONAL SEAL ENGINEER RICHARD E. MULLINAX

SIGNATURE DATE

SIG. INVENTORY NO. 12-0931

03-MAR-2006 09:39
s:\ffs\signals\workgroups\tip projects\u-2408\mast arms\design loading double mast arm rev 1-27-06.dgn
larryblount

METAL POLE No. 13

PROJECT REFERENCE NO.	SHEET NO.
U-2408	SIG.66

Design Loading for METAL POLE NO. 13

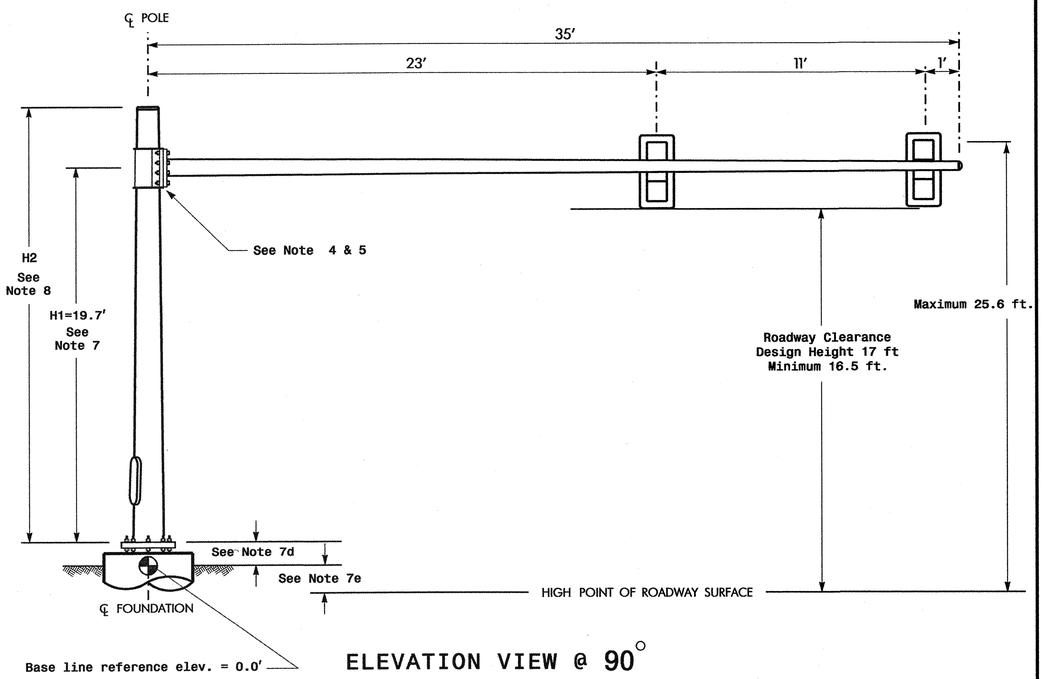

ELEVATION VIEW @ 90°

SPECIAL NOTE

The contractor is responsible for verifying that the mast arm attachment height (H1) will provide the "Design Height" clearance from the roadway before submitting final shop drawings for approval. Verify elevation data below which was obtained by field measurement or from available project survey data.

Elevation Data for Mast Arm Attachment (H1)

Elevation Differences for:	Pole 13
Baseline reference point at ℄ Foundation @ ground level	0.0 ft.
Elevation difference at High point of roadway surface	-.98 ft.
Elevation difference at Edge of travelway or face of curb	N/A

MAST ARM LOADING SCHEDULE

LOADING SYMBOL	DESCRIPTION	AREA	SIZE	WEIGHT
	SIGNAL HEAD 12"-3 SECTION-WITH BACKPLATE AND ASTRO-BRAC	9.3 S.F.	25.5" W X 52.5" L	60 LBS

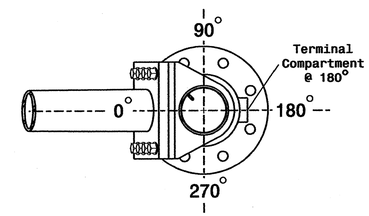

POLE RADIAL ORIENTATION

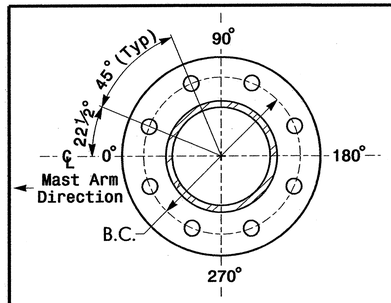

8 BOLT BASE PLATE DETAIL

See Note 6

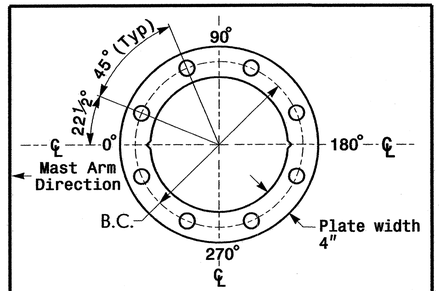

BASE PLATE TEMPLATE & ANCHOR BOLT LOCK PLATE DETAIL

For 8 Bolt Base Plate

NOTES

Design Reference Material

1. Design the traffic signal structure and foundation in accordance with:
   The 4th Edition 2001 AASHTO "Standard Specifications for Structural Supports for Highway Signs, Luminaires, and Traffic Signals, including all of the latest interim revisions.
   The 2002 NCDOT "Standard Specifications for Roads and Structures". The latest addenda to these specifications can be found in the traffic signal project special provisions.
   The 2002 NCDOT Roadway Standard Drawings.
   The traffic signal project plans and special provisions.
   The NCDOT "Metal Pole Standards" located at the following NCDOT website:
   http://www.ncdot.org/doh/preconstruct/traffic/tmssu/ws/mpoles/poles.htm

Design Requirements

2. Design the traffic signal structure using the loading conditions shown in the elevation views. These are anticipated worst case "Design loads" and may not represent the actual loads that will be applied at the time of the installation. The contractor should refer to the traffic signal plans for the actual loads that will be applied at the time of the installation.
3. Maximum allowable CSR for all signal supports is 0.9.
4. The camber design for mast arm deflection should provide an appearance of a low pitched arch where the tip or the free end of the mast arm does not deflect below horizontal when fully loaded.
5. A clamp-type bolted mast arm-to-pole connection may be used instead of the welded ring stiffened box connection shown as long as the connection meets all of the design requirements. This is a high strength connection. Use Direct Tension Indicators (ASTM F959) for each bolt.
6. Design base plate with 8 anchor bolt holes. Provide 2 inch x 66 inch anchor bolts.
7. The mast arm attachment height (H1) shown is based on the following design assumptions:
   a. Mast arm slope and deflection are not considered in determining the arm attachment height as they are assumed to offset each other.
   b. Signal heads attached to the mast arm are rigid mounted and vertically centered on the arm.
   c. The roadway clearance height for design is as shown in the elevation views.
   d. The top of the pole base plate is .75 feet above the ground elevation.
   e. Refer to the Elevation Data chart for elevation differences between the proposed foundation ground level and the high point on the roadway.
8. The pole manufacturer will determine the total height (H2) of each pole using the greater of the following:
   - Mast arm attachment height (H1) plus 2 feet, or
   - H1 plus ½ of the total height of the mast arm attachment assembly plus 1 foot.
9. If pole location adjustments are required, the contractor must gain approval from the engineer as this may affect the mast arm lengths and arm attachment heights. The contractor may contact the Signals & Geometrics Structural Engineer for assistance at (919) 733-3915.
10. The contractor is responsible for verifying that the mast arm length shown will allow proper positioning of the signal heads over the roadway.
11. The contractor is responsible for providing soil penetration testing data (SPT) to the pole manufacturer so site specific foundations can be designed.

NCDOT Windzone 4 (90 mph)

Prepared in the Offices of:
Traffic Engineering and Safety Systems Branch
STATE OF NORTH CAROLINA
DEPARTMENT OF TRANSPORTATION
Signals and Geometrics Section
122 N. McDowell St., Raleigh, NC 27603

N.C. 274 (BESSEMER CITY ROAD)
AT
I-85 SOUTHBOUND RAMP AND LOOP

DIVISION 12 GASTON COUNTY GASTONIA

PLAN DATE:	MARCH 2006	REVIEWED BY:	Z.W. Little
PREPARED BY:	C. PIERCE	REVIEWED BY:	D.Y. Ishak

SCALE 0 N/A N/A

REVISIONS	INIT.	DATE

SEAL
NORTH CAROLINA PROFESSIONAL SEAL 22031 ENGINEER RICHARD E. MULLINAX
SIGNATURE DATE
SIG. INVENTORY NO. 12-0931

07-MAR-2006 08:47
s:\its signals\workgroups\tip projects\u-2408\mast armsmetric_design_loading_single_mast_arm.dgn
capierce

PROJECT REFERENCE NO.	SHEET NO.
U-2408	SIG. 67

METAL POLE No. 14 and 15

Design Loading for METAL POLE NO. 14

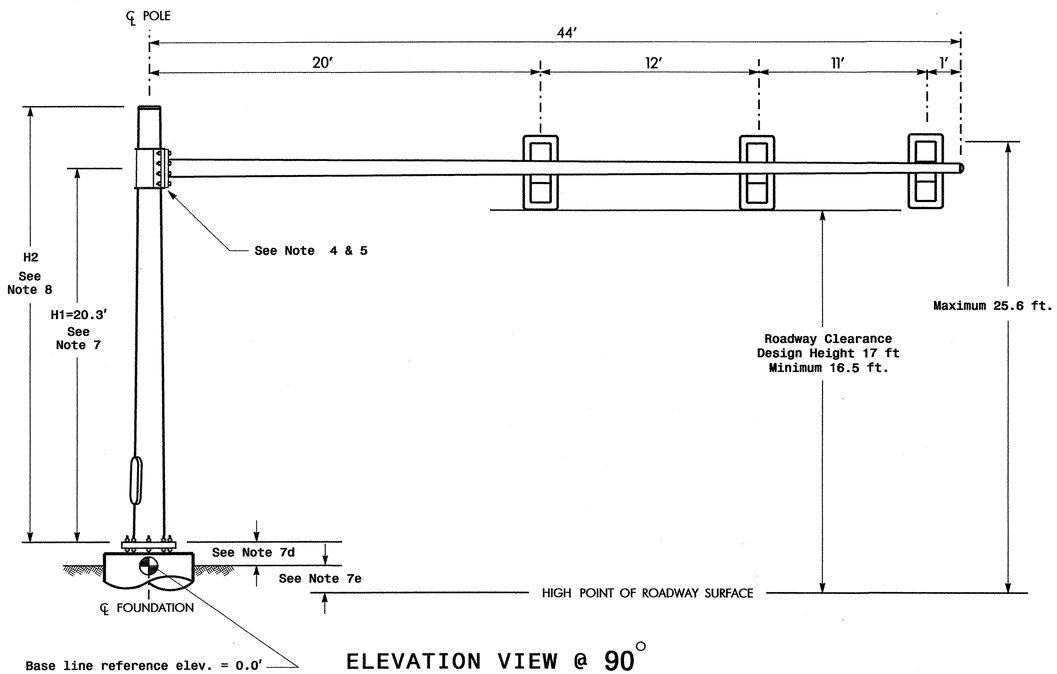

ELEVATION VIEW @ 90°

Design Loading for METAL POLE NO. 15

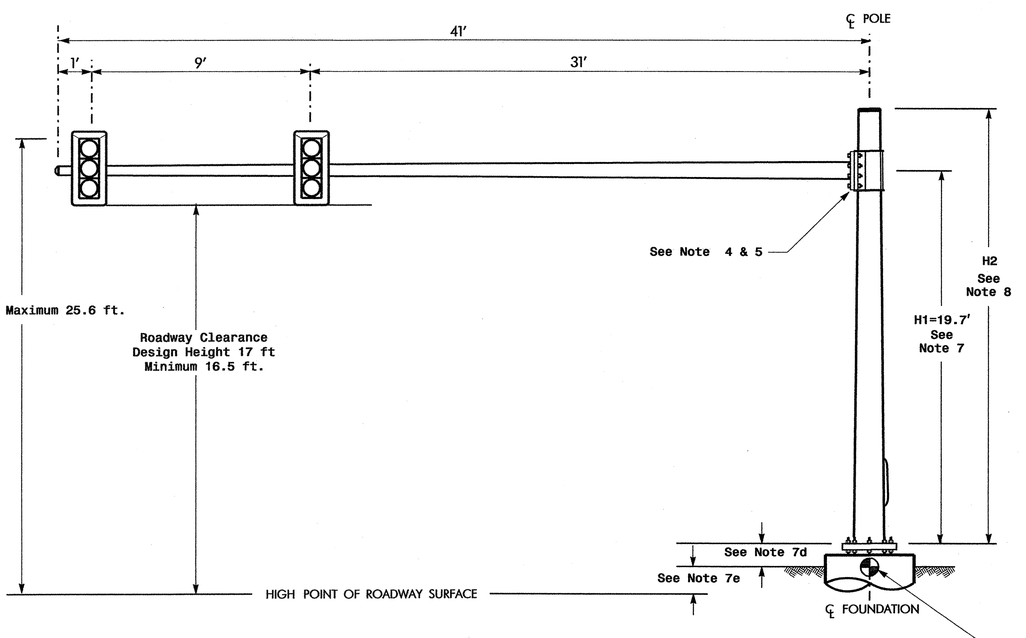

ELEVATION VIEW @ 270°

SPECIAL NOTE

The contractor is responsible for verifying that the mast arm attachment height (H1) will provide the "Design Height" clearance from the roadway before submitting final shop drawings for approval. Verify elevation data below which was obtained by field measurement or from available project survey data.

Elevation Data for Mast Arm Attachment (H1)

Elevation Differences for:	Pole 14	Pole 15
Baseline reference point at ℄ Foundation @ ground level	0.0 ft.	0.0 ft.
Elevation difference at High point of roadway surface	-1.64 ft.	-1.15 ft.
Elevation difference at Edge of travelway or face of curb	N/A	N/A

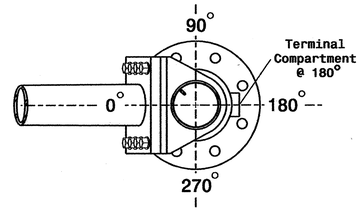

POLE RADIAL ORIENTATION

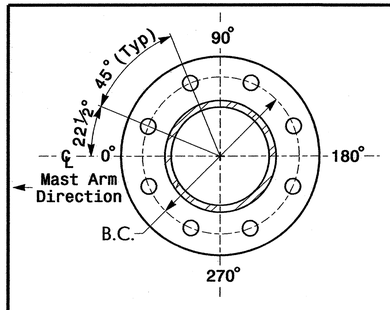

8 BOLT BASE PLATE DETAIL

See Note 6

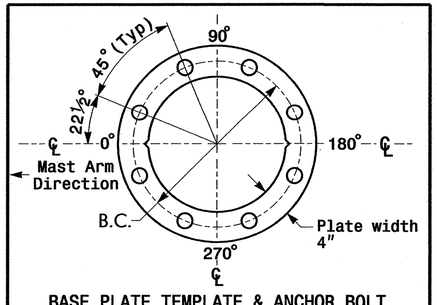

BASE PLATE TEMPLATE & ANCHOR BOLT LOCK PLATE DETAIL

For 8 Bolt Base Plate

MAST ARM LOADING SCHEDULE

LOADING SYMBOL	DESCRIPTION	AREA	SIZE	WEIGHT
	SIGNAL HEAD 12″–3 SECTION–WITH BACKPLATE AND ASTRO–BRAC	9.3 S.F.	25.5″ W X 52.5″ L	60 LBS

NOTES

Design Reference Material

1. Design the traffic signal structure and foundation in accordance with:
   - The 4th Edition 2001 AASHTO "Standard Specifications for Structural Supports for Highway Signs, Luminaires, and Traffic Signals, including all of the latest interim revisions.
   - The 2002 NCDOT "Standard Specifications for Roads and Structures". The latest addenda to these specifications can be found in the traffic signal project special provisions.
   - The 2002 NCDOT Roadway Standard Drawings.
   - The traffic signal project plans and special provisions.
   - The NCDOT "Metal Pole Standards" located at the following NCDOT website: http://www.ncdot.org/doh/preconstruct/traffic/tmssu/ws/mpoles/poles.htm

Design Requirements

2. Design the traffic signal structure using the loading conditions shown in the elevation views. These are anticipated worst case "Design loads" and may not represent the actual loads that will be applied at the time of the installation. The contractor should refer to the traffic signal plans for the actual loads that will be applied at the time of the installation.
3. Maximum allowable CSR for all signal supports is 0.9.
4. The camber design for mast arm deflection should provide an appearance of a low pitched arch where the tip or the free end of the mast arm does not deflect below horizontal when fully loaded.
5. A clamp-type bolted mast arm-to-pole connection may be used instead of the welded ring stiffened box connection shown as long as the connection meets all of the design requirements. This is a high strength connection. Use Direct Tension Indicators (ASTM F959) for each bolt.
6. Design base plate with 8 anchor bolt holes. Provide 2 inch x 66 inch anchor bolts.
7. The mast arm attachment height (H1) shown is based on the following design assumptions:
   a. Mast arm slope and deflection are not considered in determining the arm attachment height as they are assumed to offset each other.
   b. Signal heads attached to the mast arm are rigid mounted and vertically centered on the arm.
   c. The roadway clearance height for design is as shown in the elevation views.
   d. The top of the pole base plate is .75 feet above the ground elevation.
   e. Refer to the Elevation Data chart for elevation differences between the proposed foundation ground level and the high point on the roadway.
8. The pole manufacturer will determine the total height (H2) of each pole using the greater of the following:
   - Mast arm attachment height (H1) plus 2 feet, or
   - H1 plus ½ of the total height of the mast arm attachment assembly plus 1 foot.
9. If pole location adjustments are required, the contractor must gain approval from the engineer as this may affect the mast arm lengths and arm attachment heights. The contractor may contact the Signals & Geometrics Structural Engineer for assistance at (919) 733-3915.
10. The contractor is responsible for verifying that the mast arm length shown will allow proper positioning of the signal heads over the roadway.
11. The contractor is responsible for providing soil penetration testing data (SPT) to the pole manufacturer so site specific foundations can be designed.

NCDOT Windzone 4 (90 mph)

Prepared in the Offices of: Traffic Engineering and Safety Systems Branch, Signals and Geometrics Section, Division of Highways, State of North Carolina, Department of Transportation
122 N. McDowell St., Raleigh, NC 27603

SCALE 0 N/A N/A

N.C. 274 (BESSEMER CITY ROAD)
AT
I-85 NORTHBOUND RAMP AND LOOP

DIVISION 12 GASTON COUNTY GASTONIA

PLAN DATE:	MARCH 2006	REVIEWED BY:	Z.M. Little, PE
PREPARED BY:	C. PIERCE	REVIEWED BY:	D.Y. Ishak

REVISIONS	INIT.	DATE

SEAL
NORTH CAROLINA PROFESSIONAL SEAL 22027 RICHARD E. MULLINAX
SIGNATURE DATE
SIG. INVENTORY NO. 12-0928

06-MAR-2006 12:06
s:\its signals\workgroups\tip projects\u-2408\mast armsmetric_design_loading_single_mast_arm.dgn
cepierce

Design Loading for METAL POLE NO. 16

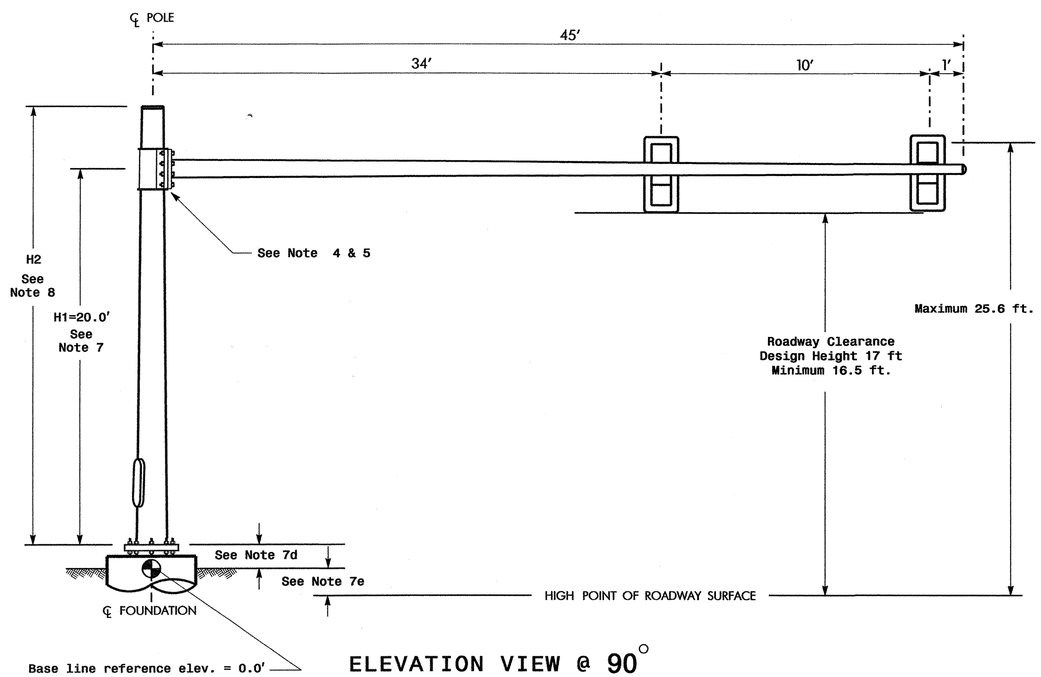

ELEVATION VIEW @ 90°

SPECIAL NOTE

The contractor is responsible for verifying that the mast arm attachment height (H1) will provide the "Design Height" clearance from the roadway before submitting final shop drawings for approval. Verify elevation data below which was obtained by field measurement or from available project survey data.

Elevation Data for Mast Arm Attachment (H1)

Elevation Differences for:	Pole 16
Baseline reference point at ℄ Foundation @ ground level	0.0 ft.
Elevation difference at High point of roadway surface	-1.48 ft.
Elevation difference at Edge of travelway or face of curb	N/A

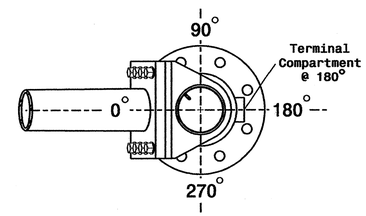

POLE RADIAL ORIENTATION

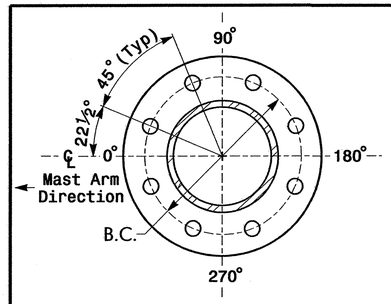

8 BOLT BASE PLATE DETAIL

See Note 6

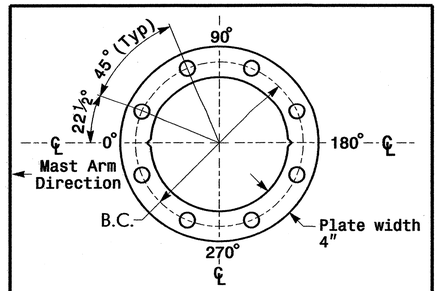

BASE PLATE TEMPLATE & ANCHOR BOLT LOCK PLATE DETAIL

For 8 Bolt Base Plate

MAST ARM LOADING SCHEDULE

LOADING SYMBOL	DESCRIPTION	AREA	SIZE	WEIGHT
	SIGNAL HEAD 12"-3 SECTION-WITH BACKPLATE AND ASTRO-BRAC	9.3 S.F.	25.5" W X 52.5" L	60 LBS

NOTES

Design Reference Material

1. Design the traffic signal structure and foundation in accordance with:
   The 4th Edition 2001 AASHTO "Standard Specifications for Structural Supports for Highway Signs, Luminaires, and Traffic Signals, including all of the latest interim revisions.
   The 2002 NCDOT "Standard Specifications for Roads and Structures". The latest addenda to these specifications can be found in the traffic signal project special provisions.
   The 2002 NCDOT Roadway Standard Drawings.
   The traffic signal project plans and special provisions.
   The NCDOT "Metal Pole Standards" located at the following NCDOT website:
   http://www.ncdot.org/doh/preconstruct/traffic/tmssu/ws/mpoles/poles.htm

Design Requirements

2. Design the traffic signal structure using the loading conditions shown in the elevation views. These are anticipated worst case "Design loads" and may not represent the actual loads that will be applied at the time of the installation. The contractor should refer to the traffic signal plans for the actual loads that will be applied at the time of the installation.
3. Maximum allowable CSR for all signal supports is 0.9.
4. The camber design for mast arm deflection should provide an appearance of a low pitched arch where the tip or the free end of the mast arm does not deflect below horizontal when fully loaded.
5. A clamp-type bolted mast arm-to-pole connection may be used instead of the welded ring stiffened box connection shown as long as the connection meets all of the design requirements. This is a high strength connection. Use Direct Tension Indicators (ASTM F959) for each bolt.
6. Design base plate with 8 anchor bolt holes. Provide 2 inch x 66 inch anchor bolts.
7. The mast arm attachment height (H1) shown is based on the following design assumptions:
   a. Mast arm slope and deflection are not considered in determining the arm attachment height as they are assumed to offset each other.
   b. Signal heads attached to the mast arm are rigid mounted and vertically centered on the arm.
   c. The roadway clearance height for design is as shown in the elevation views.
   d. The top of the pole base plate is .75 feet above the ground elevation.
   e. Refer to the Elevation Data chart for elevation differences between the proposed foundation ground level and the high point on the roadway.
8. The pole manufacturer will determine the total height (H2) of each pole using the greater of the following:
   - Mast arm attachment height (H1) plus 2 feet, or
   - H1 plus ½ of the total height of the mast arm attachment assembly plus 1 foot.
9. If pole location adjustments are required, the contractor must gain approval from the engineer as this may affect the mast arm lengths and arm attachment heights. The contractor may contact the Signals & Geometrics Structural Engineer for assistance at (919) 733-3915.
10. The contractor is responsible for verifying that the mast arm length shown will allow proper positioning of the signal heads over the roadway.
11. The contractor is responsible for providing soil penetration testing data (SPT) to the pole manufacturer so site specific foundations can be designed.

NCDOT Windzone 4 (90 mph)

Prepared in the Offices of: Traffic Engineering and Safety Systems Branch, Signals and Geometrics Section, Division of Highways, Department of Transportation, 122 N. McDowell St., Raleigh, NC 27603

SCALE 0 N/A N/A

N.C. 274 (BESSEMER CITY ROAD)
AT
I-85 NORTHBOUND RAMP AND LOOP

DIVISION 12 GASTON COUNTY GASTONIA

PLAN DATE:	MARCH 2006	REVIEWED BY:	Z.W. Little
PREPARED BY:	C. PIERCE	REVIEWED BY:	D.Y. Ishak

REVISIONS	INIT.	DATE

SEAL — NORTH CAROLINA PROFESSIONAL SEAL ENGINEER RICHARD E. MULLMAX

SIGNATURE DATE 7 March 2006

SIG. INVENTORY NO. 12-0928

07-MAR-2006 08:51
s:\its signals\workgroups\tip projects\u-2408\mast armsmetric_design_loading_single_mast_arm.dgn
cepierce

METAL POLE No. 17

PROJECT REFERENCE NO.	SHEET NO.
U-2408	SIG.69

Design Loading for METAL POLE NO. 17

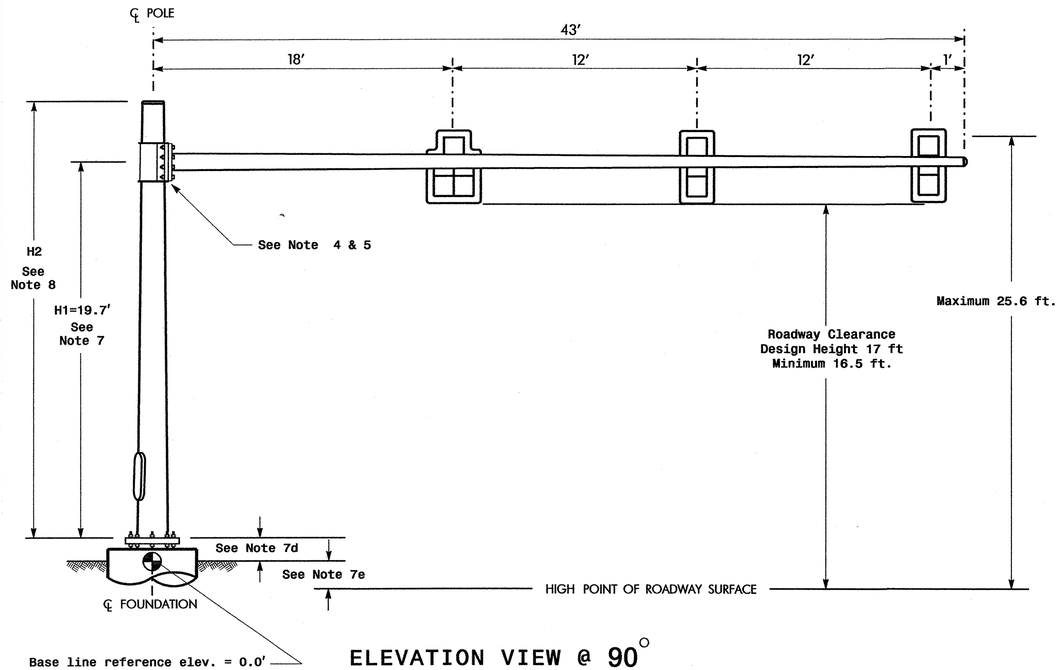

ELEVATION VIEW @ 90°

SPECIAL NOTE

The contractor is responsible for verifying that the mast arm attachment height (H1) will provide the "Design Height" clearance from the roadway before submitting final shop drawings for approval. Verify elevation data below which was obtained by field measurement or from available project survey data.

Elevation Data for Mast Arm Attachment (H1)

Elevation Differences for:	Pole 16
Baseline reference point at ℄ Foundation @ ground level	0.0 ft.
Elevation difference at High point of roadway surface	-.98 ft.
Elevation difference at Edge of travelway or face of curb	N/A

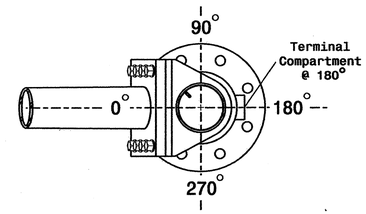

POLE RADIAL ORIENTATION

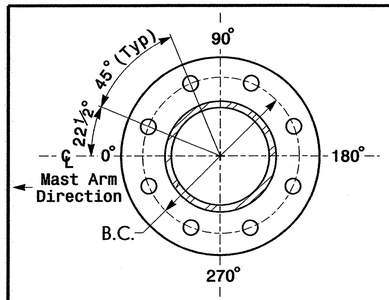

8 BOLT BASE PLATE DETAIL

See Note 6

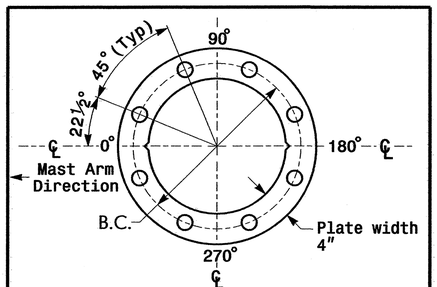

BASE PLATE TEMPLATE & ANCHOR BOLT LOCK PLATE DETAIL

For 8 Bolt Base Plate

MAST ARM LOADING SCHEDULE

LOADING SYMBOL	DESCRIPTION	AREA	SIZE	WEIGHT
	SIGNAL HEAD 12"-3 SECTION-WITH BACKPLATE AND ASTRO-BRAC	9.3 S.F.	25.5" W X 52.5" L	60 LBS
	SIGNAL HEAD 12"-5 SECTION-WITH BACKPLATE AND ASTRO-BRAC	16.3 S.F.	42.0" W X 56.0" L	103 LBS

NOTES

Design Reference Material

1. Design the traffic signal structure and foundation in accordance with:
   The 4th Edition 2001 AASHTO "Standard Specifications for Structural Supports for Highway Signs, Luminaires, and Traffic Signals, including all of the latest interim revisions.
   The 2002 NCDOT "Standard Specifications for Roads and Structures". The latest addenda to these specifications can be found in the traffic signal project special provisions.
   The 2002 NCDOT Roadway Standard Drawings.
   The traffic signal project plans and special provisions.
   The NCDOT "Metal Pole Standards" located at the following NCDOT website:
   http://www.ncdot.org/doh/preconstruct/traffic/tmssu/ws/mpoles/poles.htm

Design Requirements

2. Design the traffic signal structure using the loading conditions shown in the elevation views. These are anticipated worst case "Design loads" and may not represent the actual loads that will be applied at the time of the installation. The contractor should refer to the traffic signal plans for the actual loads that will be applied at the time of the installation.
3. Maximum allowable CSR for all signal supports is 0.9.
4. The camber design for mast arm deflection should provide an appearance of a low pitched arch where the tip or the free end of the mast arm does not deflect below horizontal when fully loaded.
5. A clamp-type bolted mast arm-to-pole connection may be used instead of the welded ring stiffened box connection shown as long as the connection meets all of the design requirements. This is a high strength connection. Use Direct Tension Indicators (ASTM F959) for each bolt.
6. Design base plate with 8 anchor bolt holes. Provide 2 inch x 66 inch anchor bolts.
7. The mast arm attachment height (H1) shown is based on the following design assumptions:
   a. Mast arm slope and deflection are not considered in determining the arm attachment height as they are assumed to offset each other.
   b. Signal heads attached to the mast arm are rigid mounted and vertically centered on the arm.
   c. The roadway clearance height for design is as shown in the elevation views.
   d. The top of the pole base plate is .75 feet above the ground elevation.
   e. Refer to the Elevation Data chart for elevation differences between the proposed foundation ground level and the high point on the roadway.
8. The pole manufacturer will determine the total height (H2) of each pole using the greater of the following:
   - Mast arm attachment height (H1) plus 2 feet, or
   - H1 plus ½ of the total height of the mast arm attachment assembly plus 1 foot.
9. If pole location adjustments are required, the contractor must gain approval from the engineer as this may affect the mast arm lengths and arm attachment heights. The contractor may contact the Signals & Geometrics Structural Engineer for assistance at (919) 733-3915.
10. The contractor is responsible for verifying that the mast arm length shown will allow proper positioning of the signal heads over the roadway.
11. The contractor is responsible for providing soil penetration testing data (SPT) to the pole manufacturer so site specific foundations can be designed.

NCDOT Windzone 4 (90 mph)

Prepared in the Offices of:
Traffic Engineering and Safety Systems Branch
Signals and Geometrics Section
122 N. McDowell St., Raleigh, NC 27603

N.C. 274 (BESSEMER CITY ROAD)
AT
SR 1338 (NORTHWEST BLVD.)

DIVISION 12 GASTON COUNTY GASTONIA

PLAN DATE:	MARCH 2006	REVIEWED BY:	Z.M. Little, PE
PREPARED BY:	C. PIERCE	REVIEWED BY:	D.Y. Ishak, PE

REVISIONS	INIT.	DATE

SCALE 0 N/A N/A

SEAL
NORTH CAROLINA PROFESSIONAL SEAL 022004 ENGINEER RICHARD E. MULLINAX
SIGNATURE DATE
SIG. INVENTORY NO. 12-0155

06-MAR-2006 12:07
st*its signals*workgroups*tip projects*u-2408*mast armsmetric_design_loading_single_mast_arm.dgn
cbpierce

METAL POLE No. 18

PROJECT REFERENCE NO.	SHEET NO.
U-2408	Sig.70

Design Loading for METAL POLE NO. 18, MAST ARM A

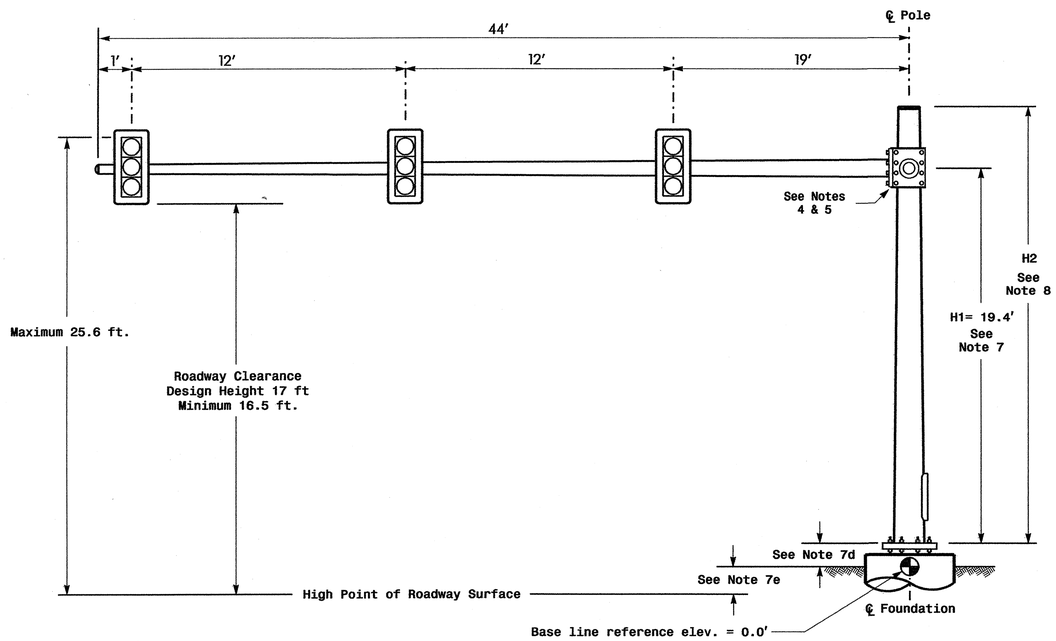

Elevation View @ 270°

Design Loading for METAL POLE NO. 18, MAST ARM B

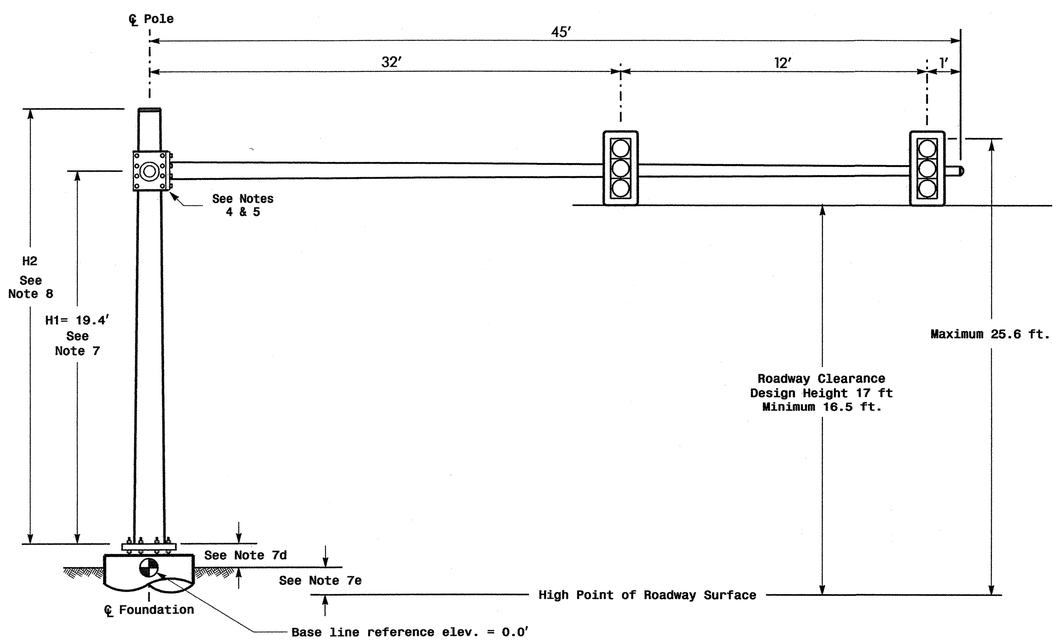

Elevation View @ 0°

SPECIAL NOTE

The contractor is responsible for verifying that the mast arm attachment height (H1) will provide the "Design Height" clearance from the roadway before submitting final shop drawings for approval. Verify elevation data below which was obtained by field measurement or from available project survey data.

Elevation Data for Mast Arm Attachment (H1)

Elevation Differences for:	Arm "A"	Arm "B"
Baseline reference point at ℄ Foundation @ ground level	0.0 ft.	0.0 ft.
Elevation difference at High point of roadway surface	-0.820 ft.	-0.820 ft.
Elevation difference at Edge of travelway or face of curb	N/A	N/A

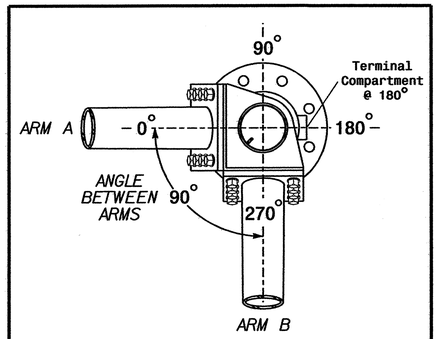

POLE RADIAL ORIENTATION

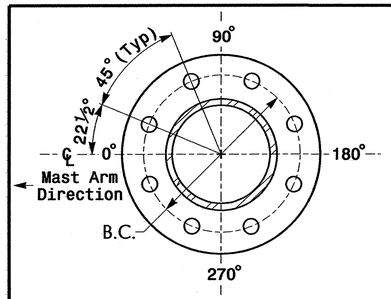

8 BOLT BASE PLATE DETAIL

See Note 6

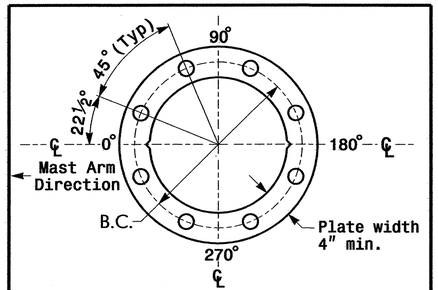

BASE PLATE TEMPLATE & ANCHOR BOLT LOCK PLATE DETAIL

For 8 Bolt Base Plate

MAST ARM LOADING SCHEDULE

LOADING SYMBOL	DESCRIPTION	AREA	SIZE	WEIGHT
	SIGNAL HEAD 12″–3 SECTION–WITH BACKPLATE AND ASTRO–BRAC	9.3 S.F.	25.5″ W X 52.5″ L	60 LBS

NOTES

Design Reference Material

1. Design the traffic signal structure and foundation in accordance with:
   - The 4th Edition 2001 AASHTO "Standard Specifications for Structural Supports for Highway Signs, Luminaires, and Traffic Signals, including all of the latest interim revisions.
   - The 2002 NCDOT "Standard Specifications for Roads and Structures". The latest addenda to these specifications can be found in the traffic signal project special provisions.
   - The 2002 NCDOT Roadway Standard Drawings.
   - The traffic signal project plans and special provisions.
   - The NCDOT "Metal Pole Standards" located at the following NCDOT website: http://www.ncdot.org/doh/preconstruct/traffic/tmssu/ws/mpoles/poles.htm

Design Requirements

2. Design the traffic signal structure using the loading conditions shown in the elevation views. These are anticipated worst case "Design loads" and may not represent the actual loads that will be applied at the time of the installation. The contractor should refer to the traffic signal plans for the actual loads that will be applied at the time of the installation.
3. Maximum allowable CSR for all signal supports is 0.9.
4. The camber design for mast arm deflection should provide an appearance of a low pitched arch where the tip or the free end of the mast arm does not deflect below horizontal when fully loaded.
5. A clamp-type bolted mast arm-to-pole connection may be used instead of the welded ring stiffened box connection shown as long as the connection meets all of the design requirements. This requires staggering the connections. Use elevation data for each arm to determine appropriate arm connection points. The arm-to-pole attachment is a high strength connection. Use Direct Tension Indicators (ASTM F959) for each bolt.
6. Design base plate with 8 anchor bolt holes. Provide 2 inch x 66 inch anchor bolts.
7. The mast arm attachment height (H1) shown is based on the following design assumptions:
   a. Mast arm slope and deflection are not considered in determining the arm attachment height as they are assumed to offset each other.
   b. Signal heads attached to the mast arm are rigid mounted and vertically centered on the arm.
   c. The roadway clearance height for design is as shown in the elevation views.
   d. The top of the pole base plate is .75 feet above the ground elevation.
   e. Refer to the Elevation Data chart for elevation differences between the proposed foundation ground level and the high point on the roadway.
8. The pole manufacturer will determine the total height (H2) of the pole using the greater of the following:
   - Mast arm attachment height (H1) plus 2 feet, or
   - H1 plus ½ of the total height of the mast arm attachment assembly plus 1 foot.
9. If pole location adjustments are required, the contractor must gain approval from the engineer as this may affect the mast arm lengths and arm attachment heights. The contractor may contact the Signals & Geometrics Structural Engineer for assistance at (919) 733-3915.
10. The contractor is responsible for verifying that the mast arm lengths shown will allow proper positioning of the signal heads over the roadway.
11. The contractor is responsible for providing soil penetration testing data (SPT) to the pole manufacturer so site specific foundations can be designed.

NCDOT Wind Zone 4 (90 mph)

Prepared in the Offices of: Traffic Engineering and Safety Systems Branch, Traffic Signal Design Section, Traffic Engineering and Safety Systems Branch, Traffic Engineering Division, Division of Highways, State of North Carolina Department of Transportation, 122 N. McDowell St., Raleigh, NC 27603

SCALE: 0 N/A — N/A

N.C. 274 (Bessember City Road) at SR 1338 (Northwest Blvd.)

Division 12 — Gaston County — Gastonia

PLAN DATE:	March 2006	REVIEWED BY:	Z.W. Little
PREPARED BY:	L. Blount	REVIEWED BY:	D.Y. Ishak

REVISIONS	INIT.	DATE

SEAL: NORTH CAROLINA PROFESSIONAL SEAL 019324 ENGINEER RICHARD E. MULLINAX

SIGNATURE — DATE

SIG. INVENTORY NO. 12-0155

03-MAR-2006 09:41
s:\ths\signals\workgroups\tip projects\u-2408\mast arms\design loading double mast arm rev 1-27-06.dgn
larryblount

METAL POLE No. 19

PROJECT REFERENCE NO.	SHEET NO.
U-2408	Sig.71

Design Loading for METAL POLE NO. 19, MAST ARM A

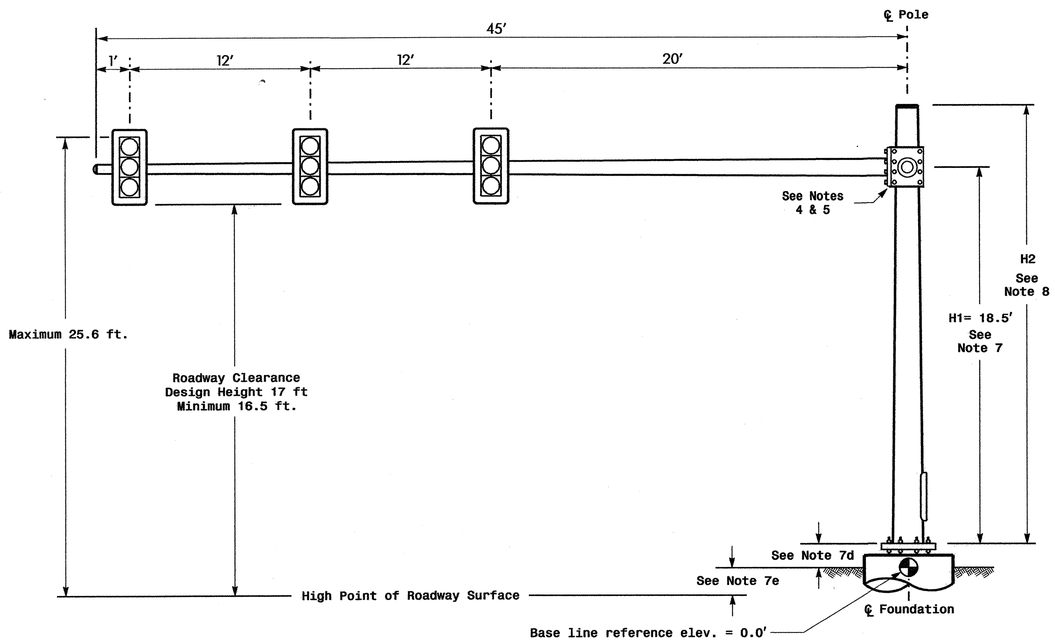

Elevation View @ 270°

Design Loading for METAL POLE NO. 19, MAST ARM B

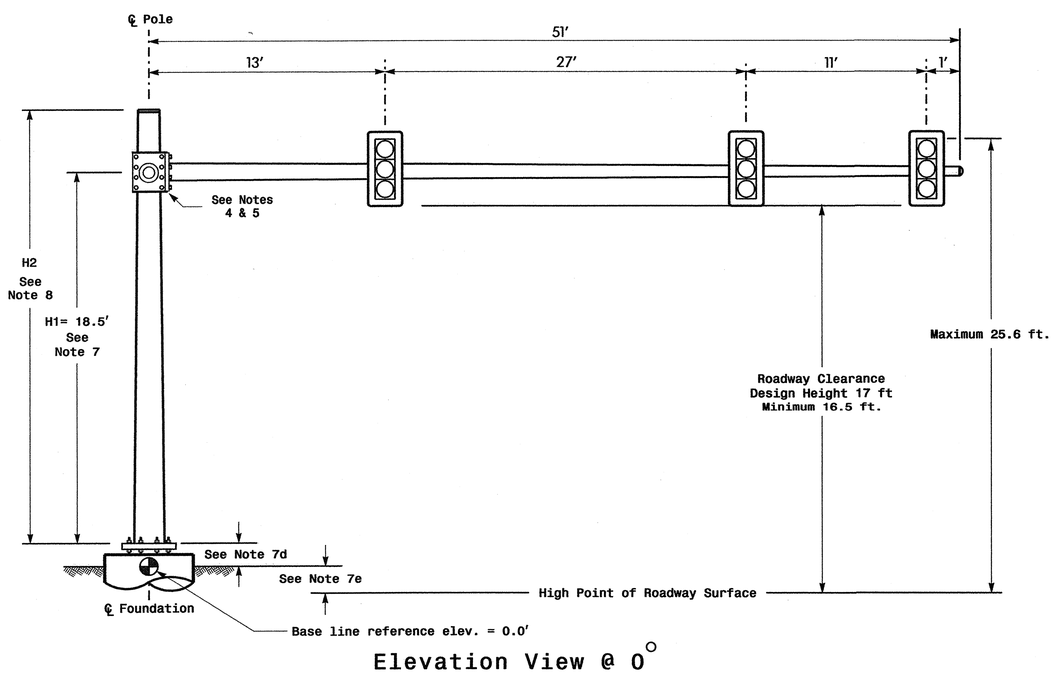

Elevation View @ 0°

SPECIAL NOTE

The contractor is responsible for verifying that the mast arm attachment height (H1) will provide the "Design Height" clearance from the roadway before submitting final shop drawings for approval. Verify elevation data below which was obtained by field measurement or from available project survey data.

Elevation Data for Mast Arm Attachment (H1)

Elevation Differences for:	Arm "A"	Arm "B"
Baseline reference point at ℄ Foundation @ ground level	0.0 ft.	0.0 ft.
Elevation difference at High point of roadway surface	+0.164 ft.	+0.164 ft.
Elevation difference at Edge of travelway or face of curb	N/A	N/A

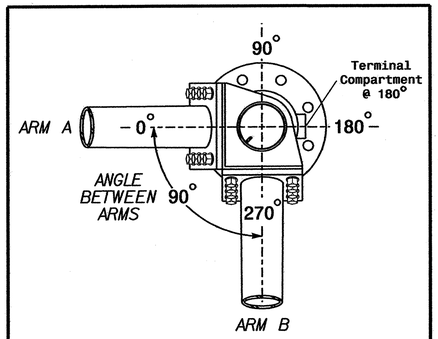

POLE RADIAL ORIENTATION

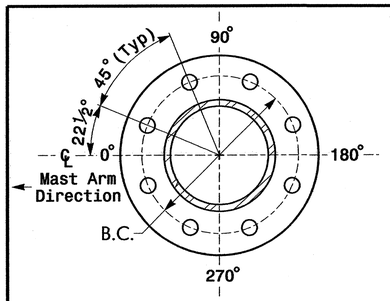

8 BOLT BASE PLATE DETAIL

See Note 6

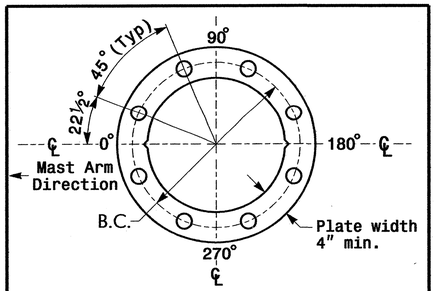

BASE PLATE TEMPLATE & ANCHOR BOLT LOCK PLATE DETAIL

For 8 Bolt Base Plate

MAST ARM LOADING SCHEDULE

LOADING SYMBOL	DESCRIPTION	AREA	SIZE	WEIGHT
	SIGNAL HEAD 12"–3 SECTION–WITH BACKPLATE AND ASTRO–BRAC	9.3 S.F.	25.5" W X 52.5" L	60 LBS

NOTES

Design Reference Material

1. Design the traffic signal structure and foundation in accordance with:
   - The 4th Edition 2001 AASHTO "Standard Specifications for Structural Supports for Highway Signs, Luminaires, and Traffic Signals, including all of the latest interim revisions.
   - The 2002 NCDOT "Standard Specifications for Roads and Structures". The latest addenda to these specifications can be found in the traffic signal project special provisions.
   - The 2002 NCDOT Roadway Standard Drawings.
   - The traffic signal project plans and special provisions.
   - The NCDOT "Metal Pole Standards" located at the following NCDOT website: http://www.ncdot.org/doh/preconstruct/traffic/tmssu/ws/mpoles/poles.htm

Design Requirements

2. Design the traffic signal structure using the loading conditions shown in the elevation views. These are anticipated worst case "Design loads" and may not represent the actual loads that will be applied at the time of the installation. The contractor should refer to the traffic signal plans for the actual loads that will be applied at the time of the installation.
3. Maximum allowable CSR for all signal supports is 0.9.
4. The camber design for mast arm deflection should provide an appearance of a low pitched arch where the tip or the free end of the mast arm does not deflect below horizontal when fully loaded.
5. A clamp-type bolted mast arm-to-pole connection may be used instead of the welded ring stiffened box connection shown as long as the connection meets all of the design requirements. This requires staggering the connections. Use elevation data for each arm to determine appropriate arm connection points. The arm-to-pole attachment is a high strength connection. Use Direct Tension Indicators (ASTM F959) for each bolt.
6. Design base plate with 8 anchor bolt holes. Provide 2 inch x 66 inch anchor bolts.
7. The mast arm attachment height (H1) shown is based on the following design assumptions:
   a. Mast arm slope and deflection are not considered in determining the arm attachment height as they are assumed to offset each other.
   b. Signal heads attached to the mast arm are rigid mounted and vertically centered on the arm.
   c. The roadway clearance height for design is as shown in the elevation views.
   d. The top of the pole base plate is .75 feet above the ground elevation.
   e. Refer to the Elevation Data chart for elevation differences between the proposed foundation ground level and the high point on the roadway.
8. The pole manufacturer will determine the total height (H2) of the pole using the greater of the following:
   - Mast arm attachment height (H1) plus 2 feet, or
   - H1 plus ½ of the total height of the mast arm attachment assembly plus 1 foot.
9. If pole location adjustments are required, the contractor must gain approval from the engineer as this may affect the mast arm lengths and arm attachment heights. The contractor may contact the Signals & Geometrics Structural Engineer for assistance at (919) 733-3915.
10. The contractor is responsible for verifying that the mast arm lengths shown will allow proper positioning of the signal heads over the roadway.
11. The contractor is responsible for providing soil penetration testing data (SPT) to the pole manufacturer so site specific foundations can be designed.

NCDOT Wind Zone 4 (90 mph)

Prepared in the Offices of: Traffic Engineering and Safety Systems Branch, Signals and Geometrics Section, Department of Transportation, State of North Carolina
122 N. McDowell St., Raleigh, NC 27603

N.C. 274 (Bessemer City Road) at Brown Street and Milton Street

Division 12 Gaston County Gastonia

PLAN DATE: March 2006 REVIEWED BY: Z.M.Little
PREPARED BY: L. Blount REVIEWED BY: D.Y. Ishak

REVISIONS	INIT.	DATE

SCALE 0 N/A N/A

SEAL NORTH CAROLINA PROFESSIONAL SEAL 22021 ENGINEER RICHARD E. MULLINAX 7 March 2006

SIGNATURE DATE

SIG. INVENTORY NO. 12-0264

03-MAR-2006 09:48
s:\ffts\signals\workgroups\ffto projects\u-2408\mast arms\design loading double mast arm rev 1-27-06.dgn
larryblount

METAL POLE No. 20 and 21

Design Loading for METAL POLE NO. 20

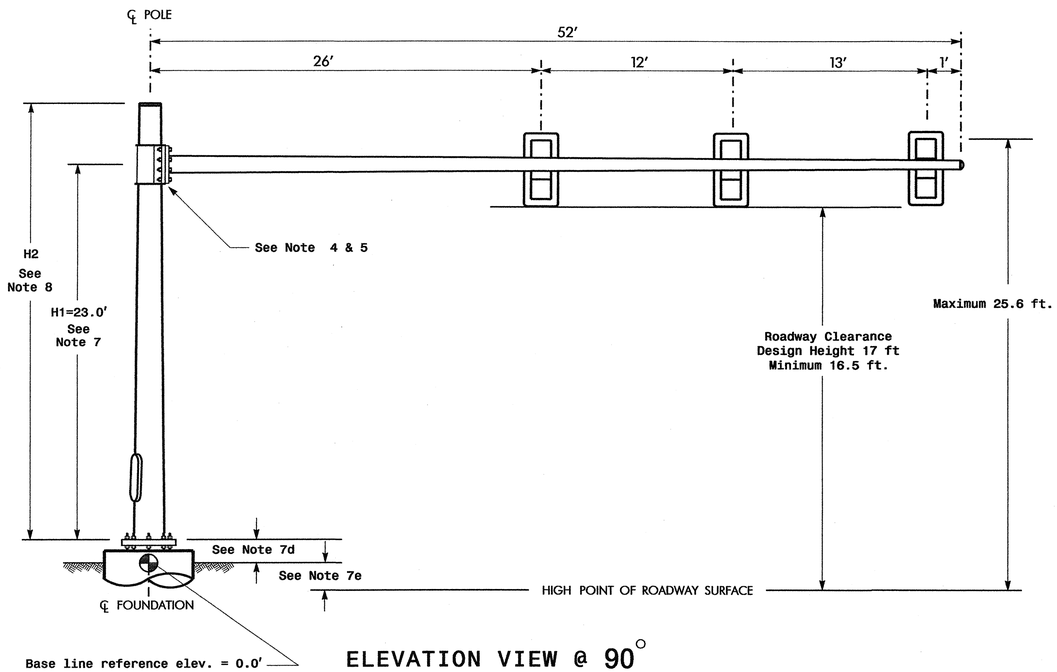

ELEVATION VIEW @ 90°

Design Loading for METAL POLE NO. 21

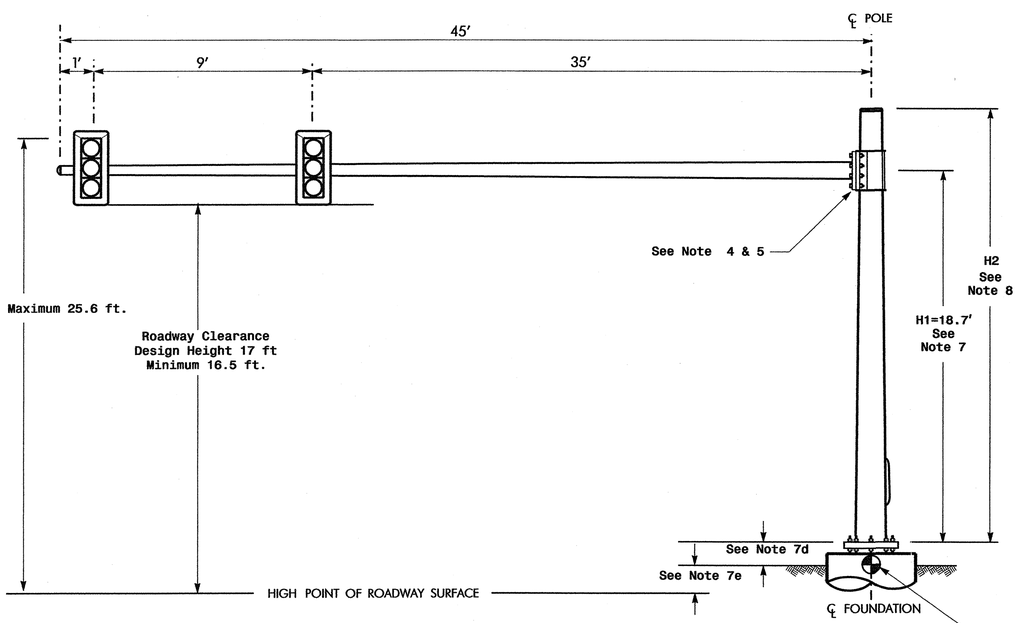

ELEVATION VIEW @ 270°

SPECIAL NOTE

The contractor is responsible for verifying that the mast arm attachment height (H1) will provide the "Design Height" clearance from the roadway before submitting final shop drawings for approval. Verify elevation data below which was obtained by field measurement or from available project survey data.

Elevation Data for Mast Arm Attachment (H1)

Elevation Differences for:	Pole 20	Pole 21
Baseline reference point at ℄ Foundation @ ground level	0.0 ft.	0.0 ft.
Elevation difference at High point of roadway surface	-4.27 ft.	-.328 ft.
Elevation difference at Edge of travelway or face of curb	N/A	N/A

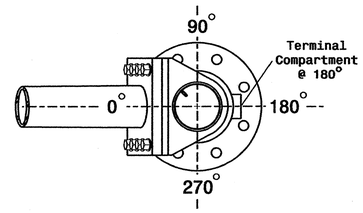

POLE RADIAL ORIENTATION

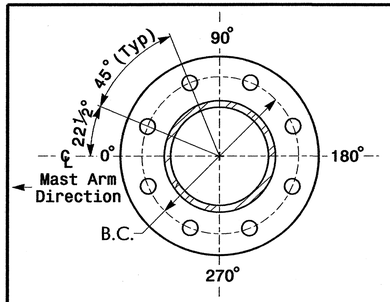

8 BOLT BASE PLATE DETAIL

See Note 6

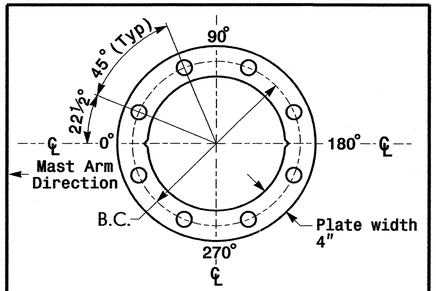

BASE PLATE TEMPLATE & ANCHOR BOLT LOCK PLATE DETAIL

For 8 Bolt Base Plate

MAST ARM LOADING SCHEDULE

LOADING SYMBOL	DESCRIPTION	AREA	SIZE	WEIGHT
	SIGNAL HEAD 12"-3 SECTION-WITH BACKPLATE AND ASTRO-BRAC	9.3 S.F.	25.5" W X 52.5" L	60 LBS

NOTES

Design Reference Material

1. Design the traffic signal structure and foundation in accordance with:
   - The 4th Edition 2001 AASHTO "Standard Specifications for Structural Supports for Highway Signs, Luminaires, and Traffic Signals, including all of the latest interim revisions.
   - The 2002 NCDOT "Standard Specifications for Roads and Structures". The latest addenda to these specifications can be found in the traffic signal project special provisions.
   - The 2002 NCDOT Roadway Standard Drawings.
   - The traffic signal project plans and special provisions.
   - The NCDOT "Metal Pole Standards" located at the following NCDOT website: http://www.ncdot.org/doh/preconstruct/traffic/tmssu/ws/mpoles/poles.htm

Design Requirements

2. Design the traffic signal structure using the loading conditions shown in the elevation views. These are anticipated worst case "Design loads" and may not represent the actual loads that will be applied at the time of the installation. The contractor should refer to the traffic signal plans for the actual loads that will be applied at the time of the installation.
3. Maximum allowable CSR for all signal supports is 0.9.
4. The camber design for mast arm deflection should provide an appearance of a low pitched arch where the tip or the free end of the mast arm does not deflect below horizontal when fully loaded.
5. A clamp-type bolted mast arm-to-pole connection may be used instead of the welded ring stiffened box connection shown as long as the connection meets all of the design requirements. This is a high strength connection. Use Direct Tension Indicators (ASTM F959) for each bolt.
6. Design base plate with 8 anchor bolt holes. Provide 2 inch x 66 inch anchor bolts.
7. The mast arm attachment height (H1) shown is based on the following design assumptions:
   a. Mast arm slope and deflection are not considered in determining the arm attachment height as they are assumed to offset each other.
   b. Signal heads attached to the mast arm are rigid mounted and vertically centered on the arm.
   c. The roadway clearance height for design is as shown in the elevation views.
   d. The top of the pole base plate is .75 feet above the ground elevation.
   e. Refer to the Elevation Data chart for elevation differences between the proposed foundation ground level and the high point on the roadway.
8. The pole manufacturer will determine the total height (H2) of each pole using the greater of the following:
   - Mast arm attachment height (H1) plus 2 feet, or
   - H1 plus ½ of the total height of the mast arm attachment assembly plus 1 foot.
9. If pole location adjustments are required, the contractor must gain approval from the engineer as this may affect the mast arm lengths and arm attachment heights. The contractor may contact the Signals & Geometrics Structural Engineer for assistance at (919) 733-3915.
10. The contractor is responsible for verifying that the mast arm length shown will allow proper positioning of the signal heads over the roadway.
11. The contractor is responsible for providing soil penetration testing data (SPT) to the pole manufacturer so site specific foundations can be designed.

NCDOT Windzone 4 (90 mph)

Prepared in the Offices of:
Traffic Engineering and Safety Systems Branch
Signals and Geometrics Section
122 N. McDowell St., Raleigh, NC 27603

SCALE 0 N/A N/A

N.C. 274 (BESSEMER CITY ROAD)
AT
BROWN STREET AND MILTON STREET

DIVISION 12 GASTON COUNTY GASTONIA

PLAN DATE:	MARCH 2006	REVIEWED BY:	Z.M. Little, PE
PREPARED BY:	C. PIERCE	REVIEWED BY:	D.Y. Ishak

REVISIONS	INIT.	DATE

SEAL
NORTH CAROLINA PROFESSIONAL SEAL 026264 ENGINEER RICHARD E. MULLINAX
7 March 2006
SIGNATURE DATE
SIG. INVENTORY NO. 12-0264

06-MAR-2006 12:08
s:\ats\signals\workgroups\ttp projects\u-2408\mast arms\metric_design_loading_single_mast_arm.dgn
cpierce

METAL POLE No. 22

PROJECT REFERENCE NO.	SHEET NO.
U-2408	Sig.73

Design Loading for METAL POLE NO. 22, MAST ARM A

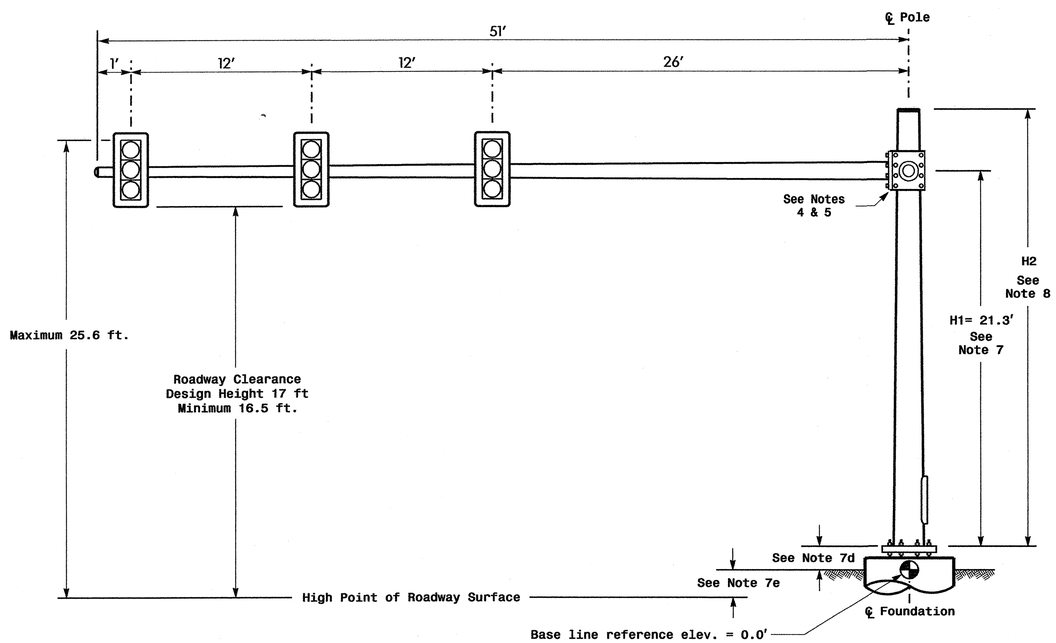

Elevation View @ 270°

Design Loading for METAL POLE NO. 22, MAST ARM B

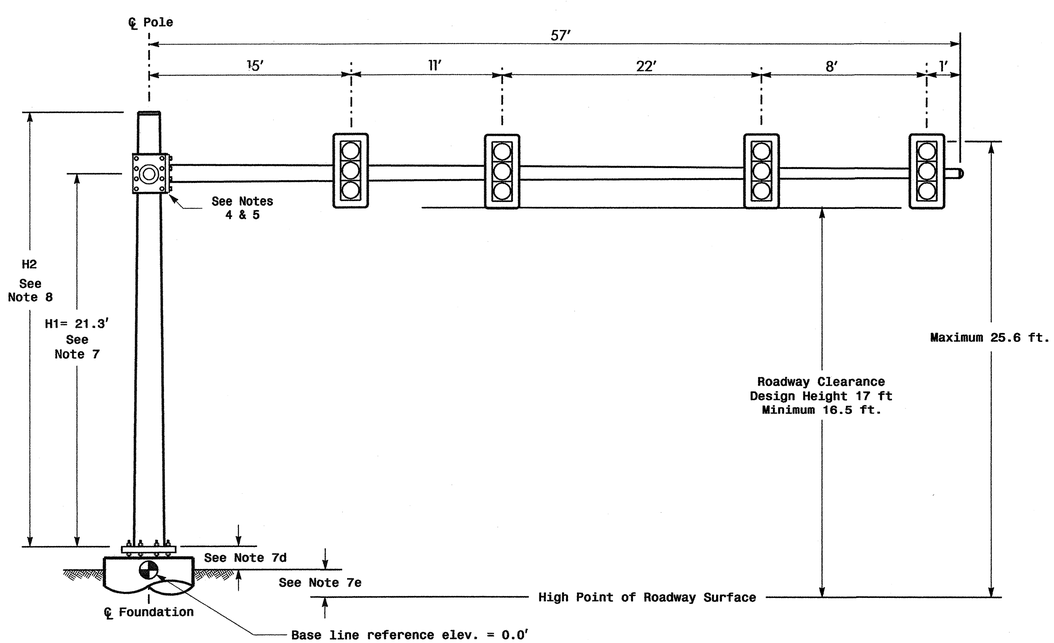

Elevation View @ 0°

SPECIAL NOTE

The contractor is responsible for verifying that the mast arm attachment height (H1) will provide the "Design Height" clearance from the roadway before submitting final shop drawings for approval. Verify elevation data below which was obtained by field measurement or from available project survey data.

Elevation Data for Mast Arm Attachment (H1)

Elevation Differences for:	Arm "A"	Arm "B"
Baseline reference point at ℄ Foundation @ ground level	0.0 ft.	0.0 ft.
Elevation difference at High point of roadway surface	-2.788 ft.	-2.788 ft.
Elevation difference at Edge of travelway or face of curb	N/A	N/A

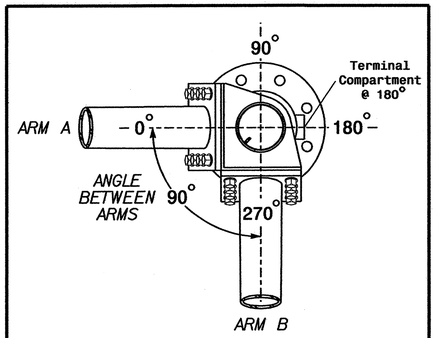

POLE RADIAL ORIENTATION

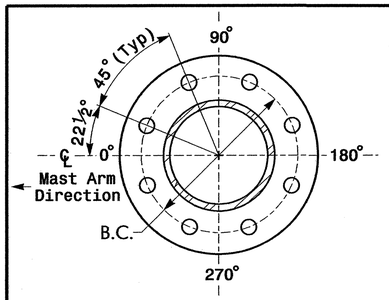

8 BOLT BASE PLATE DETAIL

See Note 6

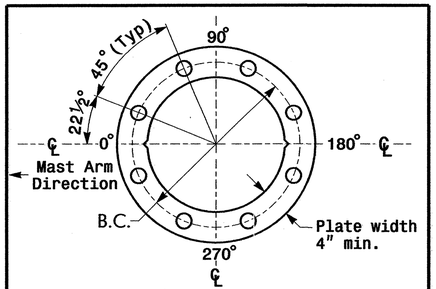

BASE PLATE TEMPLATE & ANCHOR BOLT LOCK PLATE DETAIL

For 8 Bolt Base Plate

MAST ARM LOADING SCHEDULE

LOADING SYMBOL	DESCRIPTION	AREA	SIZE	WEIGHT
	SIGNAL HEAD 12"-3 SECTION-WITH BACKPLATE AND ASTRO-BRAC	9.3 S.F.	25.5" W X 52.5" L	60 LBS
	SIGN RIGID MOUNTED WITH ASTRO-SIGN-BRAC	5.0 S.F.	24.0" W X 30.0" L	11 LBS

NOTES

Design Reference Material

1. Design the traffic signal structure and foundation in accordance with:
   - The 4th Edition 2001 AASHTO "Standard Specifications for Structural Supports for Highway Signs, Luminaires, and Traffic Signals, including all of the latest interim revisions.
   - The 2002 NCDOT "Standard Specifications for Roads and Structures". The latest addenda to these specifications can be found in the traffic signal project special provisions.
   - The 2002 NCDOT Roadway Standard Drawings.
   - The traffic signal project plans and special provisions.
   - The NCDOT "Metal Pole Standards" located at the following NCDOT website: http://www.ncdot.org/doh/preconstruct/traffic/tmssu/ws/mpoles/poles.htm

Design Requirements

2. Design the traffic signal structure using the loading conditions shown in the elevation views. These are anticipated worst case "Design loads" and may not represent the actual loads that will be applied at the time of the installation. The contractor should refer to the traffic signal plans for the actual loads that will be applied at the time of the installation.
3. Maximum allowable CSR for all signal supports is 0.9.
4. The camber design for mast arm deflection should provide an appearance of a low pitched arch where the tip or the free end of the mast arm does not deflect below horizontal when fully loaded.
5. A clamp-type bolted mast arm-to-pole connection may be used instead of the welded ring stiffened box connection shown as long as the connection meets all of the design requirements. This requires staggering the connections. Use elevation data for each arm to determine appropriate arm connection points. The arm-to-pole attachment is a high strength connection. Use Direct Tension Indicators (ASTM F959) for each bolt.
6. Design base plate with 8 anchor bolt holes. Provide 2 inch x 66 inch anchor bolts.
7. The mast arm attachment height (H1) shown is based on the following design assumptions:
   a. Mast arm slope and deflection are not considered in determining the arm attachment height as they are assumed to offset each other.
   b. Signal heads attached to the mast arm are rigid mounted and vertically centered on the arm.
   c. The roadway clearance height for design is as shown in the elevation views.
   d. The top of the pole base plate is .75 feet above the ground elevation.
   e. Refer to the Elevation Data chart for elevation differences between the proposed foundation ground level and the high point on the roadway.
8. The pole manufacturer will determine the total height (H2) of the pole using the greater of the following:
   - Mast arm attachment height (H1) plus 2 feet, or
   - H1 plus ½ of the total height of the mast arm attachment assembly plus 1 foot.
9. If pole location adjustments are required, the contractor must gain approval from the engineer as this may affect the mast arm lengths and arm attachment heights. The contractor may contact the Signals & Geometrics Structural Engineer for assistance at (919) 733-3915.
10. The contractor is responsible for verifying that the mast arm lengths shown will allow proper positioning of the signal heads over the roadway.
11. The contractor is responsible for providing soil penetration testing data (SPT) to the pole manufacturer so site specific foundations can be designed.

NCDOT Wind Zone 4 (90 mph)

Prepared in the Offices of: Traffic Engineering and Safety Systems Branch, Signals and Geometrics Section, Traffic Engineering Division, Department of Transportation, 122 N. McDowell St., Raleigh, NC 27603

N.C. 274 (Bessemer City Road) at Arkay St. And Myrtle School Rd.

Division 12 Gaston County Gastonia

PLAN DATE:	Marcch 2006	REVIEWED BY:	Z.W. Little
PREPARED BY:	L. Blount	REVIEWED BY:	D.Y. Ishak

SCALE 0 N/A N/A

REVISIONS	INIT.	DATE

SEAL: NORTH CAROLINA PROFESSIONAL SEAL 20007 ENGINEER RICHARD E. MULLINAX

SIGNATURE DATE 7 March 2006

SIG. INVENTORY NO. 12-0636

03-MAR-2006 09:19
s:\traffic\signals\workgroups\tb projects\u-2408\mast arms\design loading double mast arm rev 1-27-06.dgn
larryblount

METAL POLE No. 23 and 24

PROJECT REFERENCE NO.	SHEET NO.
U-2408	SIG. 74

Design Loading for METAL POLE NO. 23

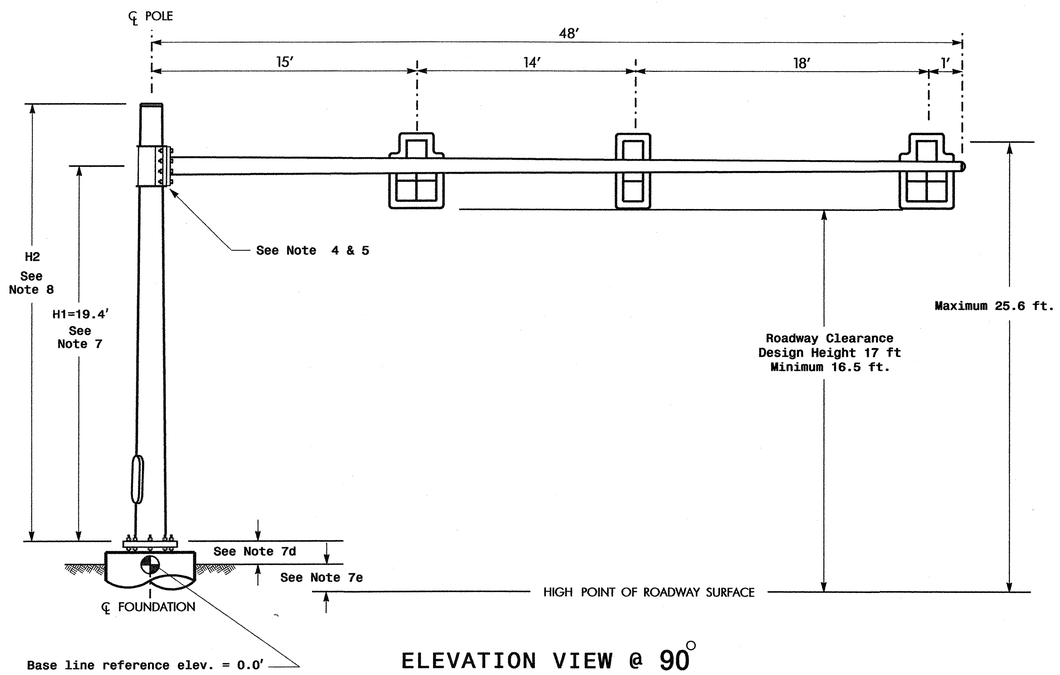

ELEVATION VIEW @ 90°

Design Loading for METAL POLE NO. 24

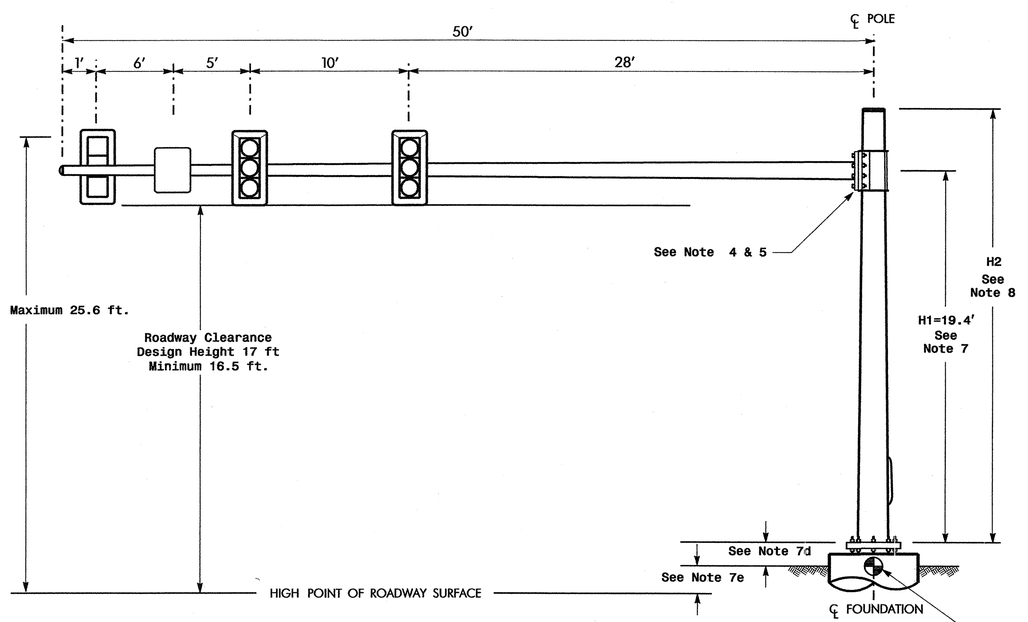

ELEVATION VIEW @ 270°

SPECIAL NOTE

The contractor is responsible for verifying that the mast arm attachment height (H1) will provide the "Design Height" clearance from the roadway before submitting final shop drawings for approval. Verify elevation data below which was obtained by field measurement or from available project survey data.

Elevation Data for Mast Arm Attachment (H1)

Elevation Differences for:	Pole 23	Pole 24
Baseline reference point at ℄ Foundation @ ground level	0.0 ft.	0.0 ft.
Elevation difference at High point of roadway surface	-.66 ft.	-.98 ft.
Elevation difference at Edge of travelway or face of curb	N/A	N/A

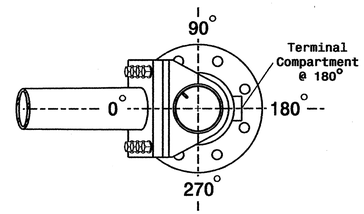

POLE RADIAL ORIENTATION

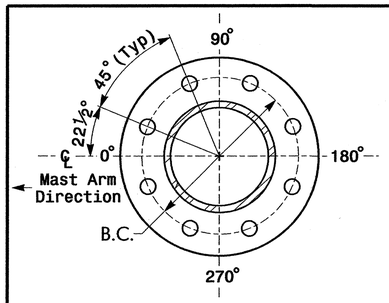

8 BOLT BASE PLATE DETAIL

See Note 6

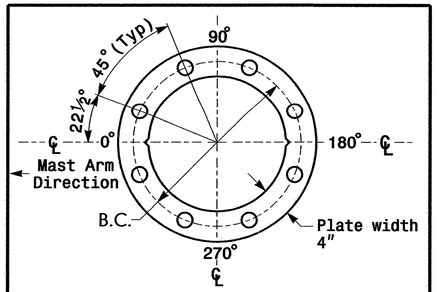

BASE PLATE TEMPLATE & ANCHOR BOLT LOCK PLATE DETAIL

For 8 Bolt Base Plate

MAST ARM LOADING SCHEDULE

LOADING SYMBOL	DESCRIPTION	AREA	SIZE	WEIGHT
	SIGN RIGID MOUNTED WITH ASTRO-SIGN-BRAC	5.0 S.F.	24.0" W X 30.0" L	11 LBS
	SIGNAL HEAD 12"-5 SECTION-WITH BACKPLATE AND ASTRO-BRAC	16.3 S.F.	42.0" W X 56.0" L	103 LBS
	SIGNAL HEAD 12"-3 SECTION-WITH BACKPLATE AND ASTRO-BRAC	9.3 S.F.	25.5" W X 52.5" L	60 LBS

NOTES

Design Reference Material

1. Design the traffic signal structure and foundation in accordance with:
   - The 4th Edition 2001 AASHTO "Standard Specifications for Structural Supports for Highway Signs, Luminaires, and Traffic Signals, including all of the latest interim revisions.
   - The 2002 NCDOT "Standard Specifications for Roads and Structures". The latest addenda to these specifications can be found in the traffic signal project special provisions.
   - The 2002 NCDOT Roadway Standard Drawings.
   - The traffic signal project plans and special provisions.
   - The NCDOT "Metal Pole Standards" located at the following NCDOT website: http://www.ncdot.org/doh/preconstruct/traffic/tmssu/ws/mpoles/poles.htm

Design Requirements

2. Design the traffic signal structure using the loading conditions shown in the elevation views. These are anticipated worst case "Design loads" and may not represent the actual loads that will be applied at the time of the installation. The contractor should refer to the traffic signal plans for the actual loads that will be applied at the time of the installation.
3. Maximum allowable CSR for all signal supports is 0.9.
4. The camber design for mast arm deflection should provide an appearance of a low pitched arch where the tip or the free end of the mast arm does not deflect below horizontal when fully loaded.
5. A clamp-type bolted mast arm-to-pole connection may be used instead of the welded ring stiffened box connection shown as long as the connection meets all of the design requirements. This is a high strength connection. Use Direct Tension Indicators (ASTM F959) for each bolt.
6. Design base plate with 8 anchor bolt holes. Provide 2 inch x 66 inch anchor bolts.
7. The mast arm attachment height (H1) shown is based on the following design assumptions:
   a. Mast arm slope and deflection are not considered in determining the arm attachment height as they are assumed to offset each other.
   b. Signal heads attached to the mast arm are rigid mounted and vertically centered on the arm.
   c. The roadway clearance height for design is as shown in the elevation views.
   d. The top of the pole base plate is .75 feet above the ground elevation.
   e. Refer to the Elevation Data chart for elevation differences between the proposed foundation ground level and the high point on the roadway.
8. The pole manufacturer will determine the total height (H2) of each pole using the greater of the following:
   - Mast arm attachment height (H1) plus 2 feet, or
   - H1 plus ½ of the total height of the mast arm attachment assembly plus 1 foot.
9. If pole location adjustments are required, the contractor must gain approval from the engineer as this may affect the mast arm lengths and arm attachment heights. The contractor may contact the Signals & Geometrics Structural Engineer for assistance at (919) 733-3915.
10. The contractor is responsible for verifying that the mast arm length shown will allow proper positioning of the signal heads over the roadway.
11. The contractor is responsible for providing soil penetration testing data (SPT) to the pole manufacturer so site specific foundations can be designed.

NCDOT Windzone 4 (90 mph)

Prepared in the Offices of:
Traffic Engineering and Safety Systems Branch
STATE OF NORTH CAROLINA DEPARTMENT OF TRANSPORTATION
Signals and Geometrics Section
122 N. McDowell St., Raleigh, NC 27603

SCALE 0 N/A
N/A

N.C. 274 (BESSEMER CITY ROAD)
AT
ARKRAY ST. AND MYRTLE SCHOOL RD.

DIVISION 12 GASTON COUNTY GASTONIA

PLAN DATE:	MARCH 2006	REVIEWED BY:	Z.M. Little, PE
PREPARED BY:	C. PIERCE	REVIEWED BY:	D.Y. Ishak, PE

REVISIONS	INIT.	DATE

SEAL
NORTH CAROLINA PROFESSIONAL SEAL 22083 ENGINEER RICHARD E. MULLINAX
7 March 2006
SIGNATURE DATE
SIG. INVENTORY NO. 12-0636

06-MAR-2006 12:08
s:\ffs signals\workgroups\tp projects\u-2408\mast armsymmetric_design_loading_single_mast_arm.dgn
cepierce

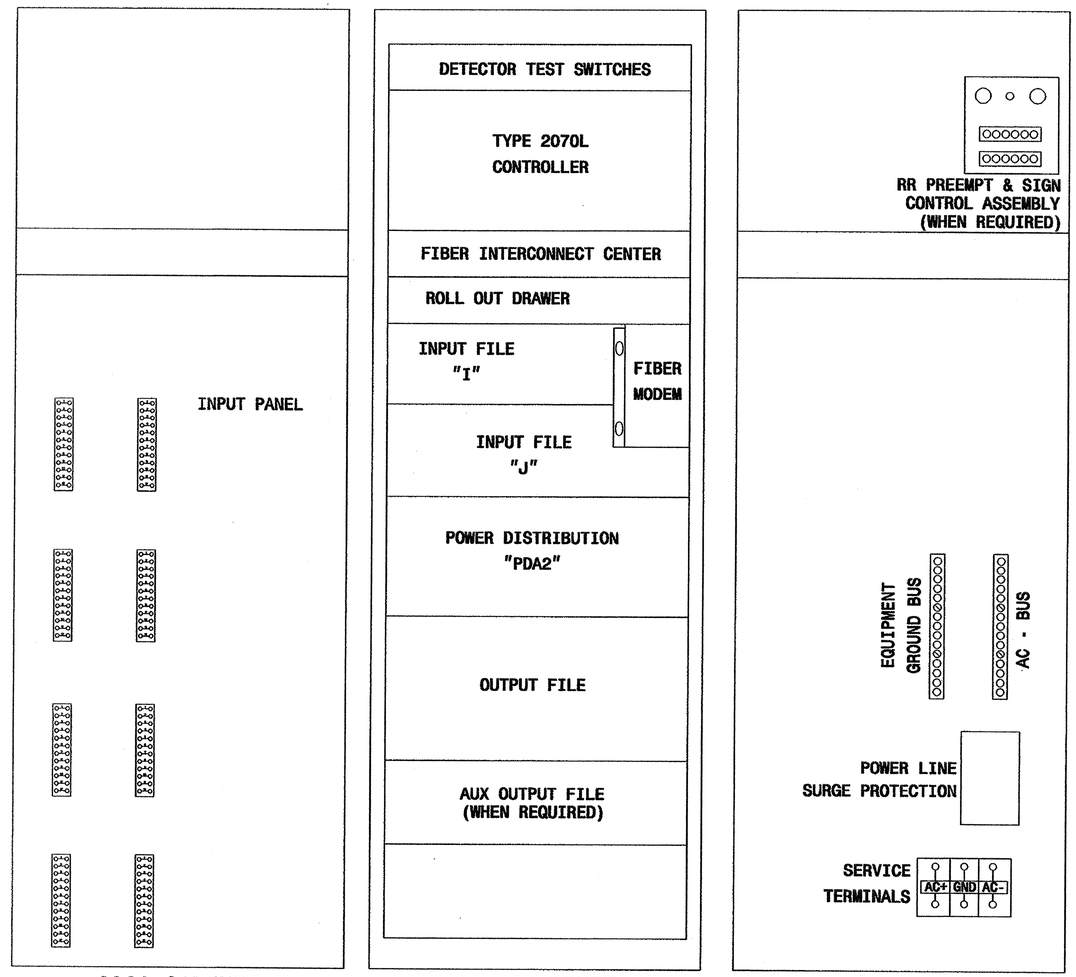

332A CABINET LEFT SIDE

332A CABINET

332A CABINET RIGHT SIDE

NOTE

-PROVIDE A 50 MM SPACE BETWEEN THE CONTROLLER AND THE ROLL OUT DRAWER TO ACCOMMODATE A FIBER INTERCONNECT CENTER.

REAR VIEW

Typical Drawing

Prepared in the Offices of:

122 N. McDowell St., Raleigh, NC 27603

Cabinet Component Layout
170 Cabinet Model 332A
with 2070L Controller

PLAN DATE:	October 2002	REVIEWED BY:	
PREPARED BY:	P L Alexander	REVIEWED BY:	

REVISIONS	INIT.	DATE

SEAL

NORTH CAROLINA PROFESSIONAL SEAL 16286 ENGINEER MILTON I. DEAN

Milton I. Dean 11/13/02

SIGNATURE DATE

SIG. INVENTORY NO. NA

13-NOV-2002 10:51
U:\cadd\170 cabinet.dgn
palexander

1. INSTALL REA, PE – 22, SHIELDED, TWISTED PAIR COMMUNICATIONS CABLE
2. INSTALL REA, PE – 38, (FIGURE – 8) SHIELDED, TWISTED PAIR COMMUNICATIONS CABLE
3. INSTALL REA, PE – 39, (UNDERGROUND) SHIELDED, TWISTED PAIR COMMUNICATIONS CABLE
4. INSTALL SMFO CABLE
5. INSTALL MMFO CABLE
6. INSTALL FIBER OPTIC DROP CABLE
7. INSTALL TRACER WIRE
8. TRENCH
9. INSTALL PVC CONDUIT
10. INSTALL RIGID, GALVANIZED STEEL CONDUIT
11. INSTALL RIGID, GALVANIZED STEEL RISER WITH WEATHERHEAD
12. INSTALL RIGID, GALVANIZED STEEL RISER WITH FIBER OPTIC CABLE SEAL
13. INSTALL OUTER-DUCT POLYETHYLENE CONDUIT
14. INSTALL POLYETHYLENE CONDUIT
15. DIRECTIONAL DRILL CONDUIT
16. BORE AND JACK CONDUIT
17. INSTALL CABLE(S) IN EXISTING CONDUIT
18. INSTALL CABLE(S) IN NEW CONDUIT
19. INSTALL CABLE(S) IN EXISTING RISER
20. INSTALL CABLE(S) IN NEW RISER
21. INSTALL CABLE(S) IN EXISTING CONDUIT STUBOUTS
22. INSTALL NEW CONDUIT INTO EXISTING CABINET BASE (USE EXISTING CONDUIT STUB-OUTS WHEN AVAILABLE)
23. INSTALL NEW RISER INTO EXISTING CABINET BASE (USE EXISTING CONDUIT STUB-OUTS WHEN AVAILABLE)
24. INSTALL NEW CONDUIT INTO EXISTING POLE MOUNTED CABINET
25. INSTALL NEW RISER INTO EXISTING POLE MOUNTED CABINET
26. TERMINATE COMMUNICATIONS CABLE ON EXISTING TELEMETRY INTERFACE PANEL IN TRAFFIC SIGNAL CONTROLLER CABINET
27. INSTALL NEW TELEMETRY INTERFACE PANEL IN TRAFFIC SIGNAL CONTROLLER CABINET
28. INSTALL INTERCONNECT CENTER, PATCH PANEL, JUMPERS, AND FUSION SPLICE CABLE IN CABINET
29. INSTALL UNDERGROUND SPLICE ENCLOSURE
30. INSTALL AERIAL SPLICE ENCLOSURE
31. INSTALL POLE MOUNTED SPLICE CABINET
32. INSTALL BASE MOUNTED SPLICE CABINET
33. REMOVE EXISTING SPLICE CABINET
34. INSTALL CABINET FOUNDATION
35. REMOVE EXISTING CABINET FOUNDATION
36. INSTALL CCTV CAMERA ASSEMBLY
37. INSTALL CCTV CAMERA WOOD POLE
38. INSTALL CCTV CAMERA METAL POLE AND FOUNDATION
39. INSTALL JUNCTION BOX
40. INSTALL OVERSIZED JUNCTION BOX
41. REMOVE EXISTING JUNCTION BOX
42. INSTALL WOOD POLE
43. REMOVE EXISTING WOOD POLE
44. INSTALL AERIAL GUY ASSEMBLY
45. INSTALL STANDARD GUY ASSEMBLY
46. INSTALL SIDEWALK GUY ASSEMBLY
47. INSTALL MESSENGER CABLE
48. REMOVE EXISTING COMMUNICATIONS CABLE AND MESSENGER CABLE
49. REMOVE EXISTING COMMUNICATIONS CABLE
50. INSTALL TELEPHONE SERVICE
51. INSTALL CABLE STORAGE RACKS (SNOW SHOES) AND STORE 30 METERS OF CABLE
52. INSTALL DELINEATOR MARKER
53. STORE 6 METERS OF COMMUNICATIONS CABLE
54. LASH CABLE(S) TO EXISTING SIGNAL/COMMUNICATIONS CABLE
55. LASH CABLE(S) TO EXISTING MESSENGER CABLE
56. LASH CABLE(S) TO NEW MESSENGER CABLE
57. MODIFY EXISTING ELECTRICAL SERVICE
58. INSTALL NEW ELECTRICAL SERVICE

LEGEND

- F. O. — NEW FIBER OPTIC COMMUNICATIONS CABLE
- TWIST. PR. — NEW TWISTED PAIR COMMUNICATIONS CABLE
- EXIST. — EXISTING COMMUNICATIONS CABLE
- REM. — EXISTING COMMUNICATIONS CABLE TO BE REMOVED
- NEW AERIAL GUY ASSEMBLY
- NEW CONDUIT
- EXISTING CONDUIT
- D D — NEW DIRECTIONAL DRILLED CONDUIT
- B & J — NEW BORED AND JACKED CONDUIT
- NEW JUNCTION BOX
- EXISTING JUNCTION BOX
- NEW WOOD POLE
- EXISTING WOOD POLE
- S — NEW AERIAL SPLICE ENCLOSURE
- NEW METAL POLE
- EXISTING METAL POLE
- NEW CCTV CAMERA ASSEMBLY
- NEW STANDARD GUY ASSEMBLY
- NEW SIDEWALK GUY ASSEMBLY
- NEW CABLE STORAGE RACKS (SNOW SHOES)
- EXISTING CONTROLLER AND CABINET
- S — EXISTING SPLICE CABINET
- S — NEW SPLICE CABINET
- SP — SIGNAL POLE
- XX-XXXX — SIGNAL INVENTORY NUMBER

CONSTRUCTION NOTE SYMBOLOGY KEY

- XX — INDICATES NUMBER OF CABLES, LOOPS, ETC.
- XX — INDICATES NUMBER OF FIBERS PER CABLE, TWISTED PAIRS PER CABLE, ETC.
- XX — INDICATES NUMBER OF RISER(S)/CONDUIT(S)
- XX — INDICATES DIAMETER OF RISER(S)/CONDUIT(S) (MILLIMETER)

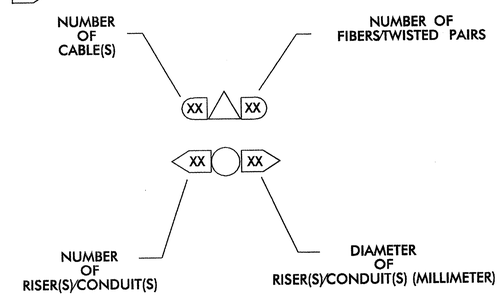

Prepared in the Office of:
THE LPA GROUP TRANSPORTATION CONSULTANTS
THE LPA GROUP of North Carolina, p.a.
4004 PARKLAND COURT, SUITE 201
Raleigh, North Carolina 27609

Traffic Engineering and Safety Systems Branch
STATE OF NORTH CAROLINA DEPARTMENT OF TRANSPORTATION
Signals and Geometrics Section

SCALE: N — NA

CONSTRUCTION NOTES

DIVISION 12 GASTON COUNTY GASTONIA

PLAN DATE: 3/20/03 REVIEWED BY: Rob Dubnicka, PE

PREPARED BY: Andrew Spencer REVIEWED BY:

REVISIONS	INIT.	DATE

SEAL

NORTH CAROLINA PROFESSIONAL SEAL 027742 ENGINEER ROBERT J. DUBNICKA

SIGNATURE Robert J. Dubnicka DATE 8-9-04

SIG. INVENTORY NO.

09-AUG-2004 15:34
T:\Traffic\U2408\U2408routes\routing consnotes.dgn
rdubnicka

FIBER OPTIC CABLE

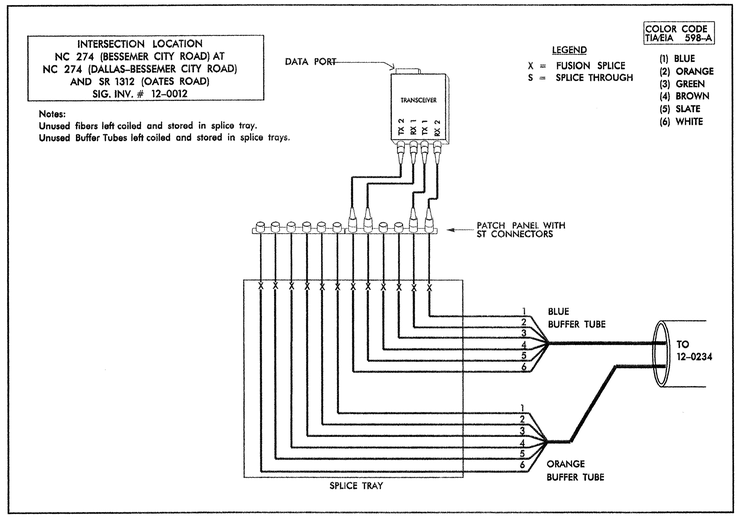

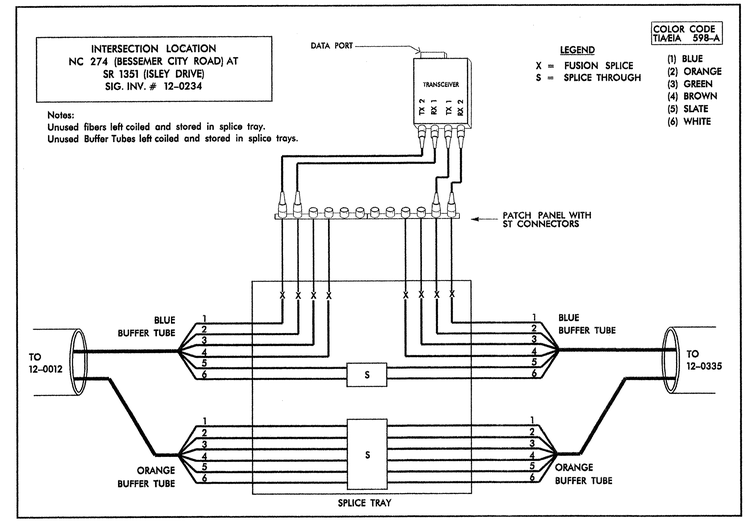

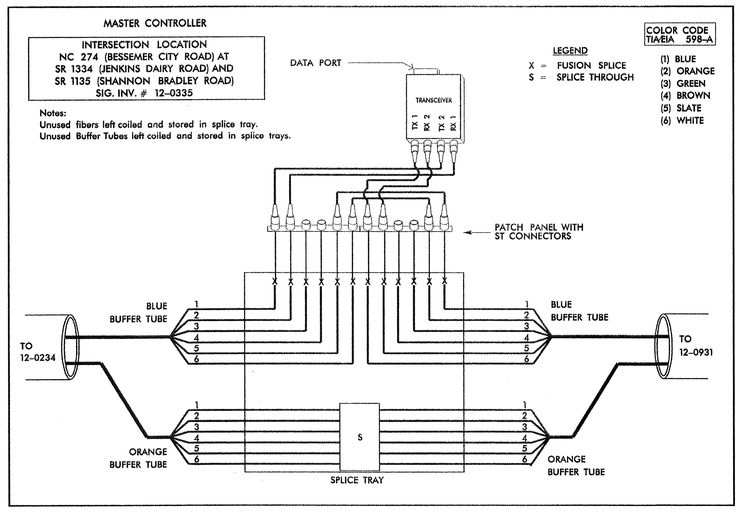

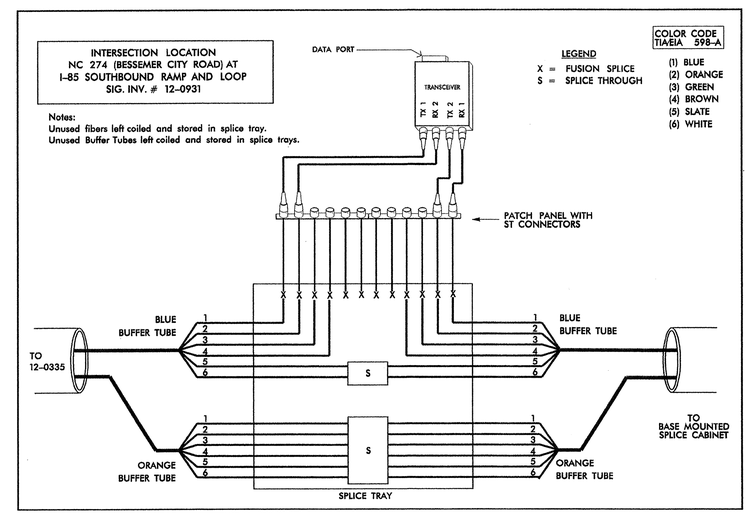

Furnish Self Healing Ring Type Transceivers

Prepared in the Office of:
THE LPA GROUP
TRANSPORTATION CONSULTANTS
THE LPA GROUP of North Carolina, p.a.
4404 PROFESSIONAL DRIVE, SUITE 201
Raleigh, North Carolina 27609

Public Protection and Safety Comes Second
STATE OF NORTH CAROLINA DEPARTMENT OF TRANSPORTATION
Signals and Geometrics Section

SCALE: NA

COMMUNICATION CABLE ROUTING SPLICE PLAN

DIVISION 12 GASTON COUNTY GASTONIA

PLAN DATE: 3/20/03 REVIEWED BY: Rob Dubnicka, PE

PREPARED BY: Andrew Spencer REVIEWED BY:

REVISIONS	INIT.	DATE

SEAL
NORTH CAROLINA PROFESSIONAL SEAL 027742 ENGINEER ROBERT J. DUBNICKA
SIGNATURE Robert J. Dubnicka DATE 8-9-04
SIG. INVENTORY NO.

03-AUG-2004 15:51
T:\traffic\MU2408\MU2408route\spliceplot.dgn
cuanlee

METRIC	PROJECT REFERENCE NO.	SHEET NO.
	U-2408	SIG. 78

FIBER OPTIC CABLE

BASE MOUNTED SPLICE CABINET
@ SIG INV. # 12-0931

LEGEND
X = FUSION SPLICE
S = SPLICE THROUGH

COLOR CODE
TIA/EIA 598-A

(1) BLUE
(2) ORANGE
(3) GREEN
(4) BROWN
(5) SLATE
(6) WHITE

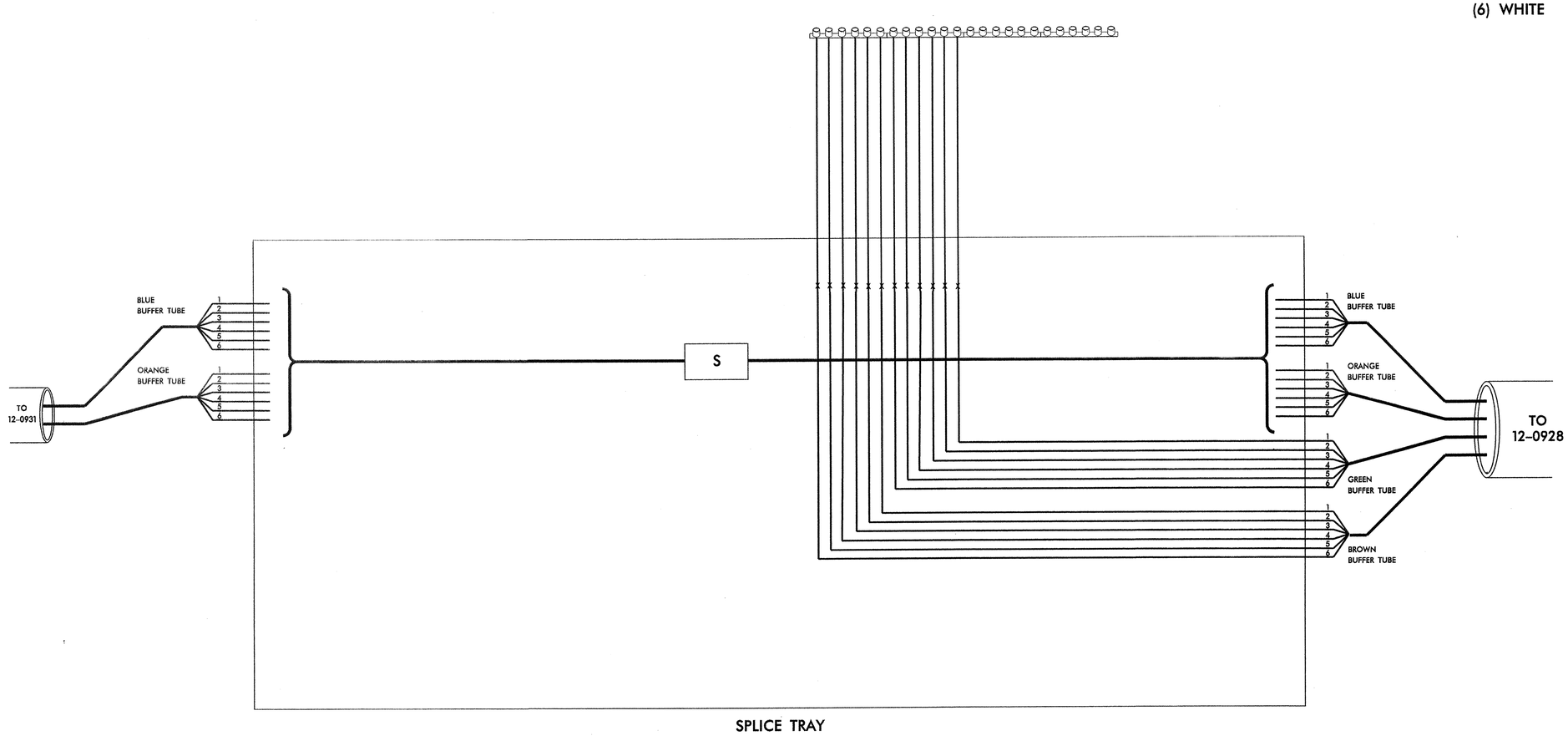

Notes:
Unused fibers left coiled and stored in splice tray.
Unused Buffer Tubes left coiled and stored in splice tray.

Prepared in the Office of:
THE LPA GROUP
TRANSPORTATION CONSULTANTS
THE LPA GROUP of North Carolina, p.a.
4804 PROFESSIONAL COURT, SUITE 201
Raleigh, North Carolina 27609

Traffic Engineering and Safety Systems Branch
STATE OF NORTH CAROLINA
DEPARTMENT OF TRANSPORTATION
Signals and Geometrics Section

COMMUNICATION CABLE ROUTING
SPLICE PLAN

DIVISION 12 GASTON COUNTY GASTONIA

PLAN DATE:	3/20/03	REVIEWED BY:	Rob Dubnicka, PE
PREPARED BY:	Andrew Spencer	REVIEWED BY:	

REVISIONS	INIT.	DATE

SCALE
NA

SEAL
NORTH CAROLINA PROFESSIONAL SEAL 027742 ENGINEER ROBERT J. DUBNICKA

Robert J. Dubnicka 8-9-04
SIGNATURE DATE

SIG. INVENTORY NO.

10-AUG-2004 10:13
\\rwtraffic\U2408\u2408route\splicetypdet.dgn
rdubnicka

METRIC	PROJECT REFERENCE NO.	SHEET NO.
	U-2408	SIG. 79

FIBER OPTIC CABLE

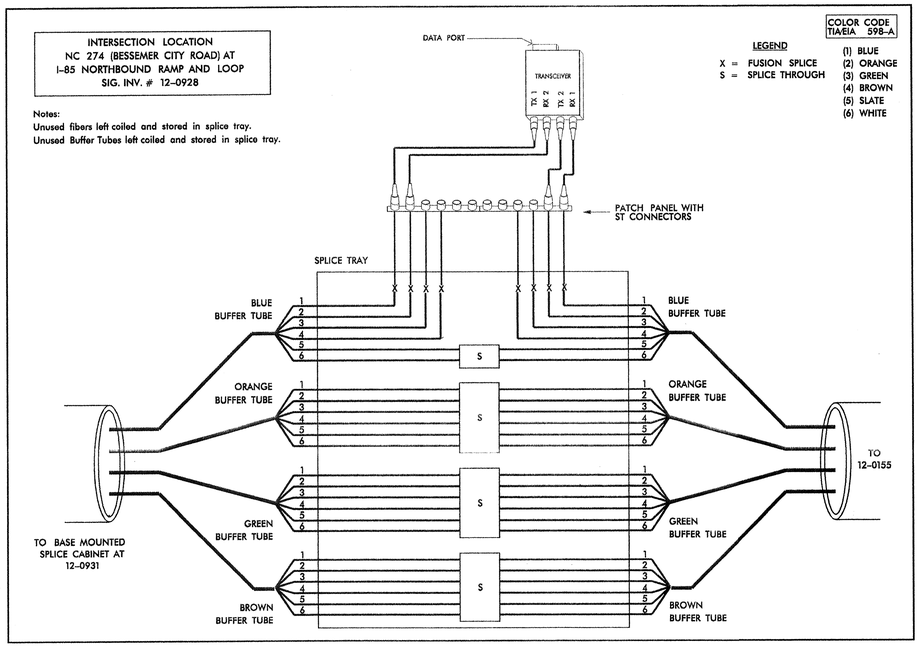

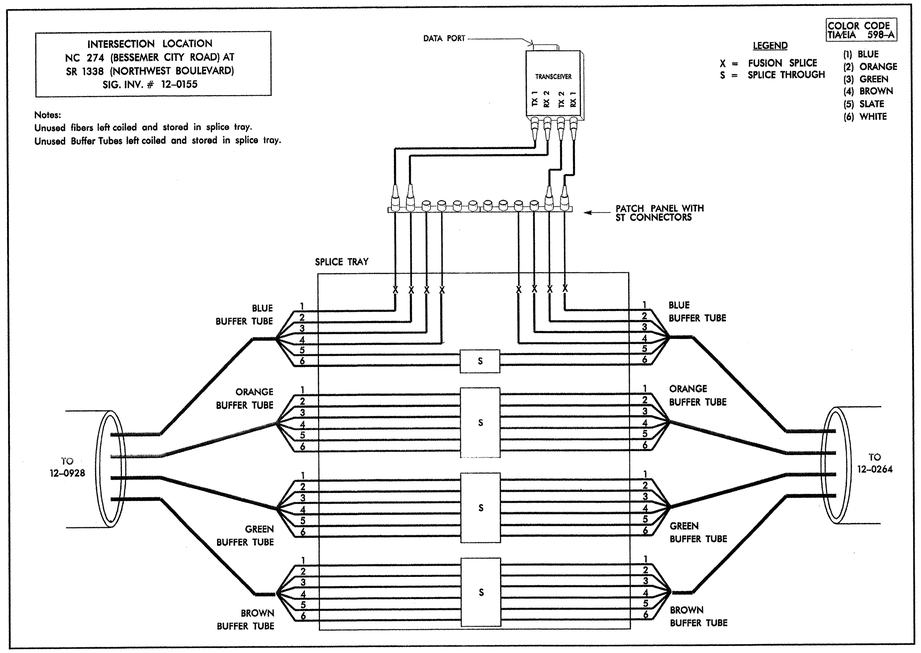

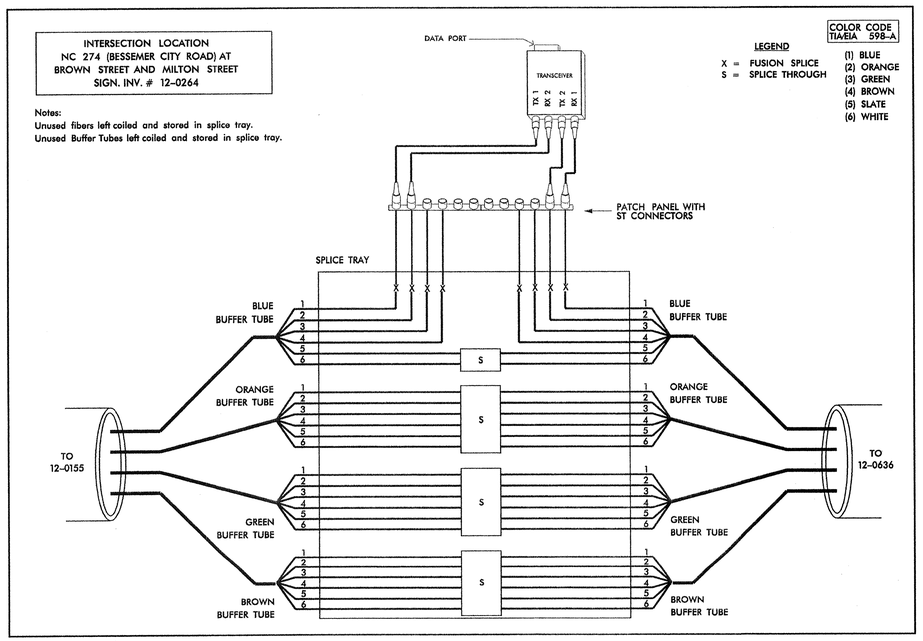

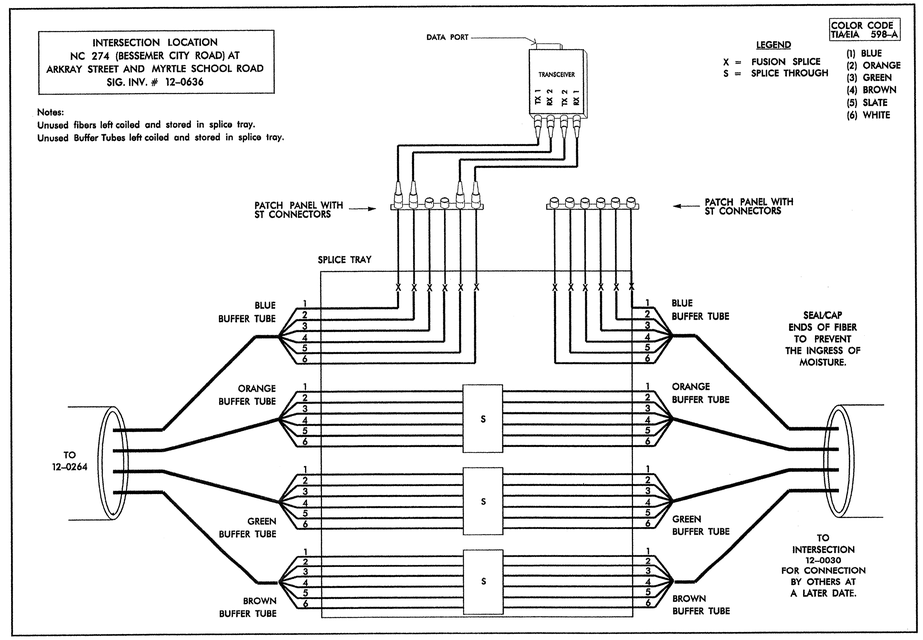

Furnish Self Healing Ring Type Transceivers

Prepared in the Office of:
THE LPA GROUP
TRANSPORTATION CONSULTANTS
THE LPA GROUP of North Carolina, p.a.
4804 PROFESSIONAL CIRCLE, SUITE 201
Raleigh, North Carolina 27609

Traffic Engineering and Safety Systems Branch
STATE OF NORTH CAROLINA
DEPARTMENT OF TRANSPORTATION
Signals and Geometrics Section

COMMUNICATION CABLE ROUTING
SPLICE PLAN

DIVISION 12 GASTON COUNTY GASTONIA

PLAN DATE:	3/20/03	REVIEWED BY:	Rob Dubnicka, PE
PREPARED BY:	Andrew Spencer	REVIEWED BY:	

SCALE: NA

REVISIONS	INIT.	DATE

SEAL
NORTH CAROLINA PROFESSIONAL SEAL 027742 ENGINEER ROBERT J. DUBNICKA
SIGNATURE 8-9-04 DATE
SIG. INVENTORY NO.

10-AUG-2004 10:12
Y:\traffic\U2408\u2408route\splicetypdet.dgn
rdubnicka

METRIC	PROJECT REFERENCE NO.	SHEET NO.
	U-2408	SIG. 80

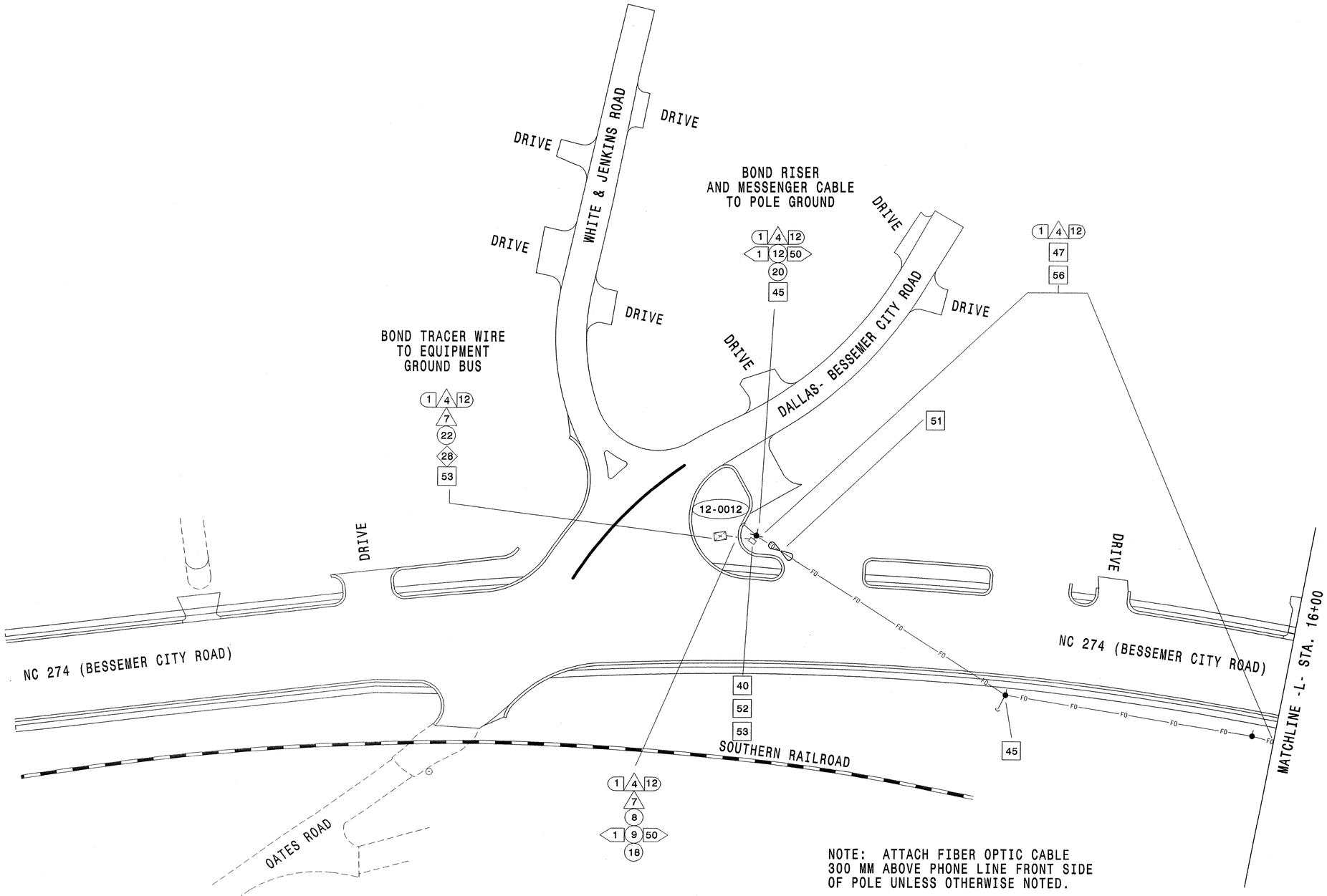

NOTE: ATTACH FIBER OPTIC CABLE
300 MM ABOVE PHONE LINE FRONT SIDE
OF POLE UNLESS OTHERWISE NOTED.

Prepared in the Office of:

THE LPA GROUP
TRANSPORTATION CONSULTANTS
THE LPA GROUP of North Carolina, p.a.
4601 PROFESSIONAL COURT, SUITE 201
Raleigh, North Carolina 27609

Traffic Engineering and Safety Systems Branch
STATE OF NORTH CAROLINA DEPARTMENT OF TRANSPORTATION
Signals and Geometrics Section

SCALE
5 0 10
1:500

COMMUNICATION CABLE AND ROUTING PLAN

DIVISION 12 GASTON COUNTY GASTONIA

PLAN DATE: FEBRUARY 18, 2002 REVIEWED BY: ROB DUBNICKA, PE

PREPARED BY: AP SPENCER REVIEWED BY:

REVISIONS	INIT.	DATE

SEAL

NORTH CAROLINA PROFESSIONAL SEAL 027742 ENGINEER ROBERT J. DUBNICKA

Robert J. Dubnicka 8-9-04

SIGNATURE DATE

SIG. INVENTORY NO.

METRIC	PROJECT REFERENCE NO.	SHEET NO.
	U-2408	SIG. 81

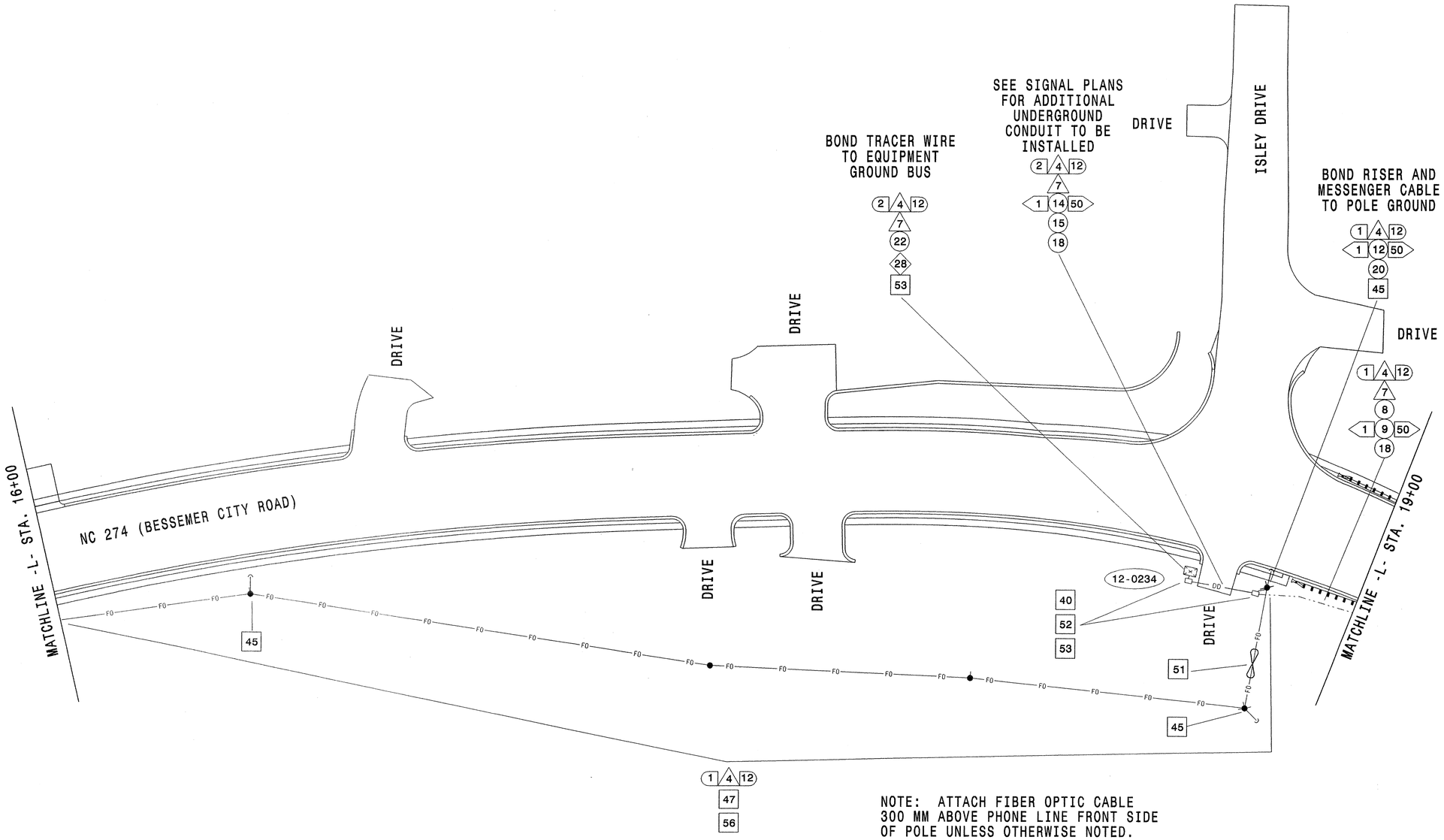

NOTE: ATTACH FIBER OPTIC CABLE 300 MM ABOVE PHONE LINE FRONT SIDE OF POLE UNLESS OTHERWISE NOTED.

Prepared in the Office of:
THE LPA GROUP
TRANSPORTATION CONSULTANTS

Traffic Engineering and Safety Systems Branch
STATE OF NORTH CAROLINA
DEPARTMENT OF TRANSPORTATION
Signals and Geometrics Section

SCALE 5 0 10
1:500

COMMUNICATION CABLE AND ROUTING PLAN

DIVISION 12 GASTON COUNTY GASTONIA

PLAN DATE: FEBRUARY 18, 2003 REVIEWED BY: ROB DUBNICKA, PE
PREPARED BY: AP SPENCER REVIEWED BY:

REVISIONS	INIT.	DATE

SEAL
NORTH CAROLINA PROFESSIONAL SEAL 027742 ENGINEER ROBERT J. DUBNICKA
SIGNATURE 8-9-04 DATE
SIG. INVENTORY NO.

METRIC	PROJECT REFERENCE NO.	SHEET NO.
	U-2408	SIG. 82

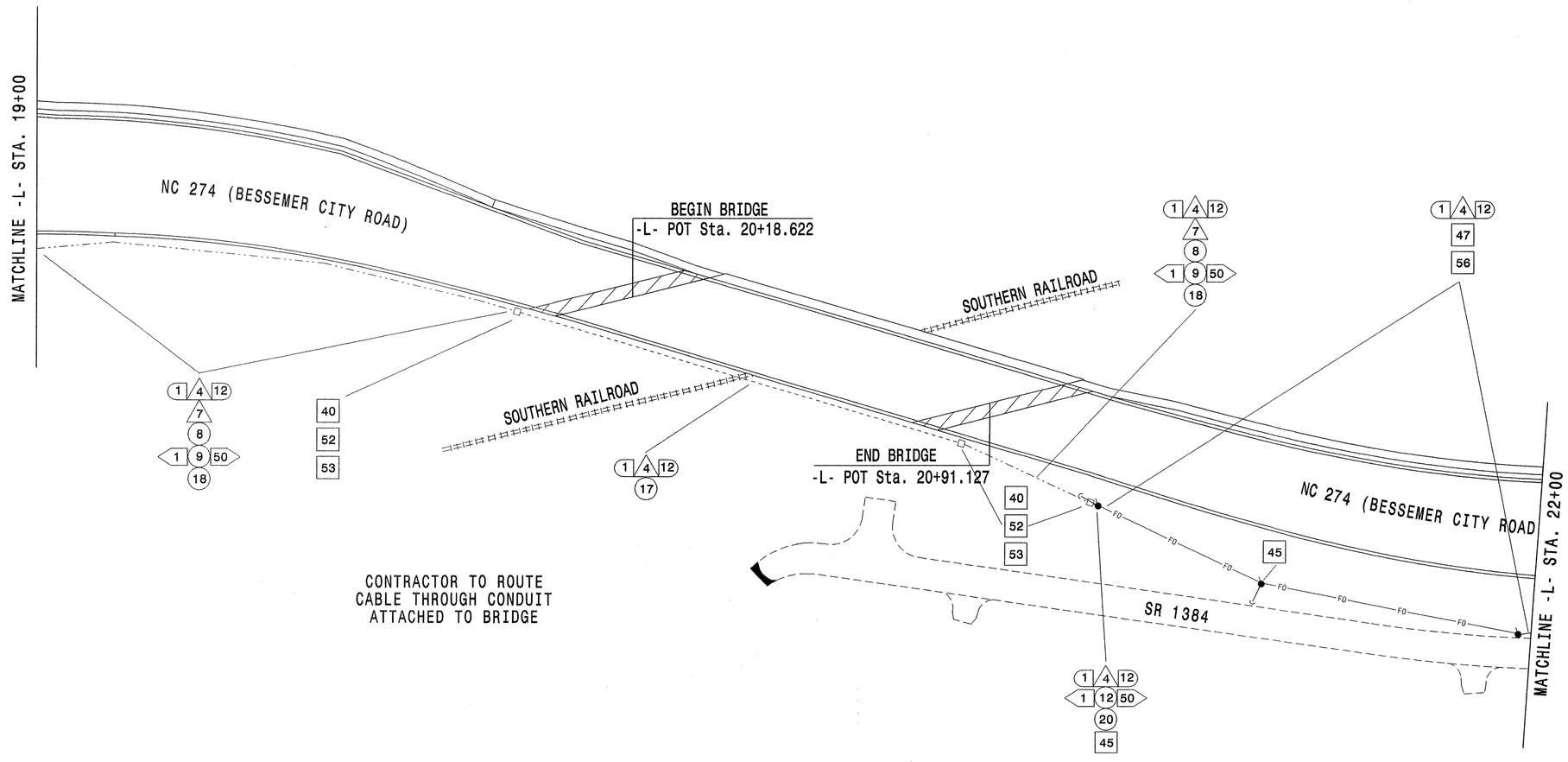

NOTE: ATTACH FIBER OPTIC CABLE
300 MM ABOVE PHONE LINE FRONT SIDE
OF POLE UNLESS OTHERWISE NOTED.

Prepared in the Office of:
THE LPA GROUP
TRANSPORTATION CONSULTANTS

COMMUNICATION CABLE
AND
ROUTING PLAN

DIVISION 12 GASTON COUNTY GASTONIA

PLAN DATE:	FEBRUARY18,2003	REVIEWED BY:	ROB DUBNICKA,PE
PREPARED BY:	AP SPENCER	REVIEWED BY:	

REVISIONS	INIT.	DATE

SCALE 5 0 10
1:500

SEAL
NORTH CAROLINA PROFESSIONAL SEAL 027742 ENGINEER ROBERT J. DUBNICKA
SIGNATURE 8-9-04 DATE
SIG. INVENTORY NO.

METRIC	PROJECT REFERENCE NO.	SHEET NO.
	U-2408	SIG. 83

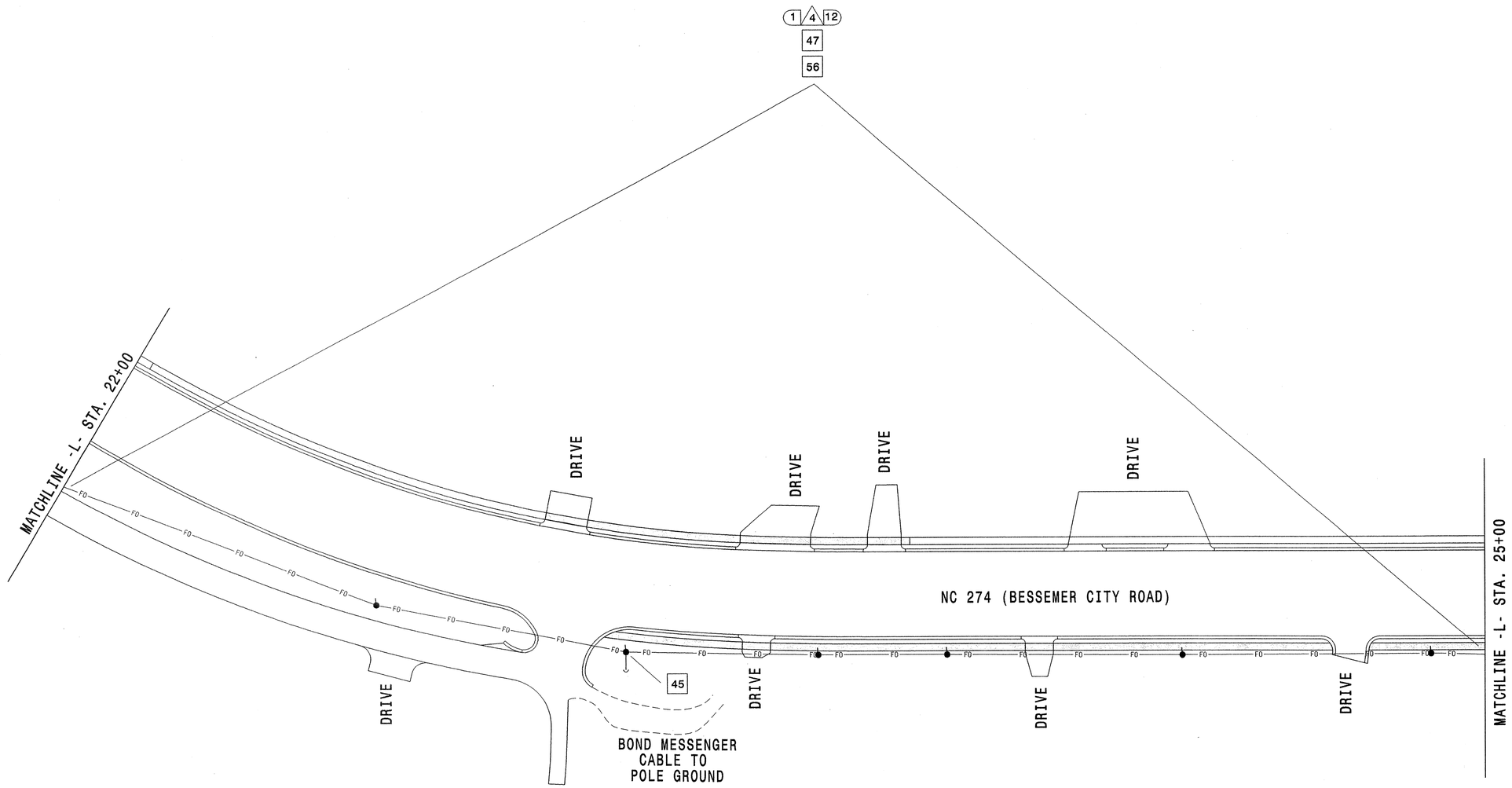

NOTE: ATTACH FIBER OPTIC CABLE
300 MM ABOVE PHONE LINE FRONT SIDE
OF POLE UNLESS OTHERWISE NOTED.

Prepared in the Office of:
THE LPA GROUP
TRANSPORTATION CONSULTANTS

Traffic Engineering and Safety Systems Branch
STATE OF NORTH CAROLINA
DEPARTMENT OF TRANSPORTATION
Signals and Geometrics Section

SCALE
5 0 10
1:500

COMMUNICATION CABLE
AND
ROUTING PLAN

DIVISION 12 GASTON COUNTY GASTONIA

PLAN DATE:	FEBRUARY 18,200	REVIEWED BY:	ROB DUBNICKA,PE
PREPARED BY:	AP SPENCER	REVIEWED BY:	

REVISIONS	INIT.	DATE

SEAL
NORTH CAROLINA PROFESSIONAL SEAL 027742 ENGINEER ROBERT J. DUBNICKA

Robert J. Dubnicka 8-9-04
SIGNATURE DATE

SIG. INVENTORY NO.

09-AUG-2004 15:34
V:\Traffic\U2408\u2408route\RTE08.dgn
rdubnicka

METRIC	PROJECT REFERENCE NO.	SHEET NO.
	U-2408	SIG. 84

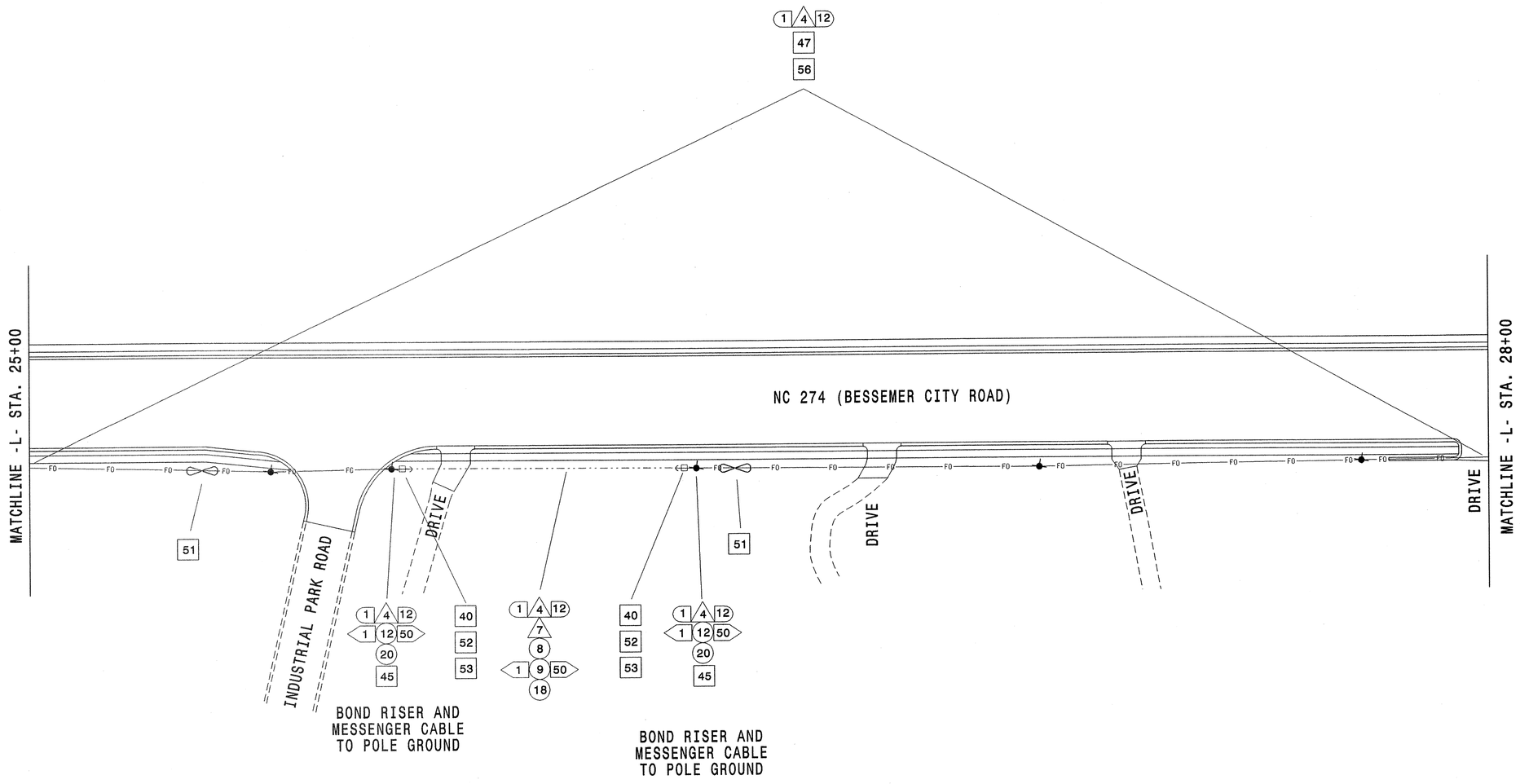

NOTE: ATTACH FIBER OPTIC CABLE 300 MM ABOVE PHONE LINE FRONT SIDE OF POLE UNLESS OTHERWISE NOTED.

Prepared in the Office of:

THE LPA GROUP TRANSPORTATION CONSULTANTS

THE LPA GROUP of North Carolina, p.a.
LPA PROFESSIONAL CENTER, SUITE 201
Raleigh, North Carolina 27609

Traffic Engineering and Safety Systems Branch
STATE OF NORTH CAROLINA
DEPARTMENT OF TRANSPORTATION
Signals and Geometrics Section

SCALE
5 0 10
1:500

COMMUNICATION CABLE AND ROUTING PLAN

DIVISION 12 GASTON COUNTY GASTONIA

PLAN DATE:	FEBRUARY 18,2003	REVIEWED BY:	ROB DUBNICKA,PE
PREPARED BY:	AP SPENCER	REVIEWED BY:	

REVISIONS	INIT.	DATE

SEAL

NORTH CAROLINA PROFESSIONAL SEAL 027742 ENGINEER ROBERT J. DUBNICKA

Robert J. Dubnicka 8-9-04
SIGNATURE DATE

SIG. INVENTORY NO.

09-AUG-2004 15:34
Y:\traffic\U2408\U2408route\RTE09.dgn
rdubnicka

METRIC	PROJECT REFERENCE NO.	SHEET NO.
	U-2408	SIG. 85

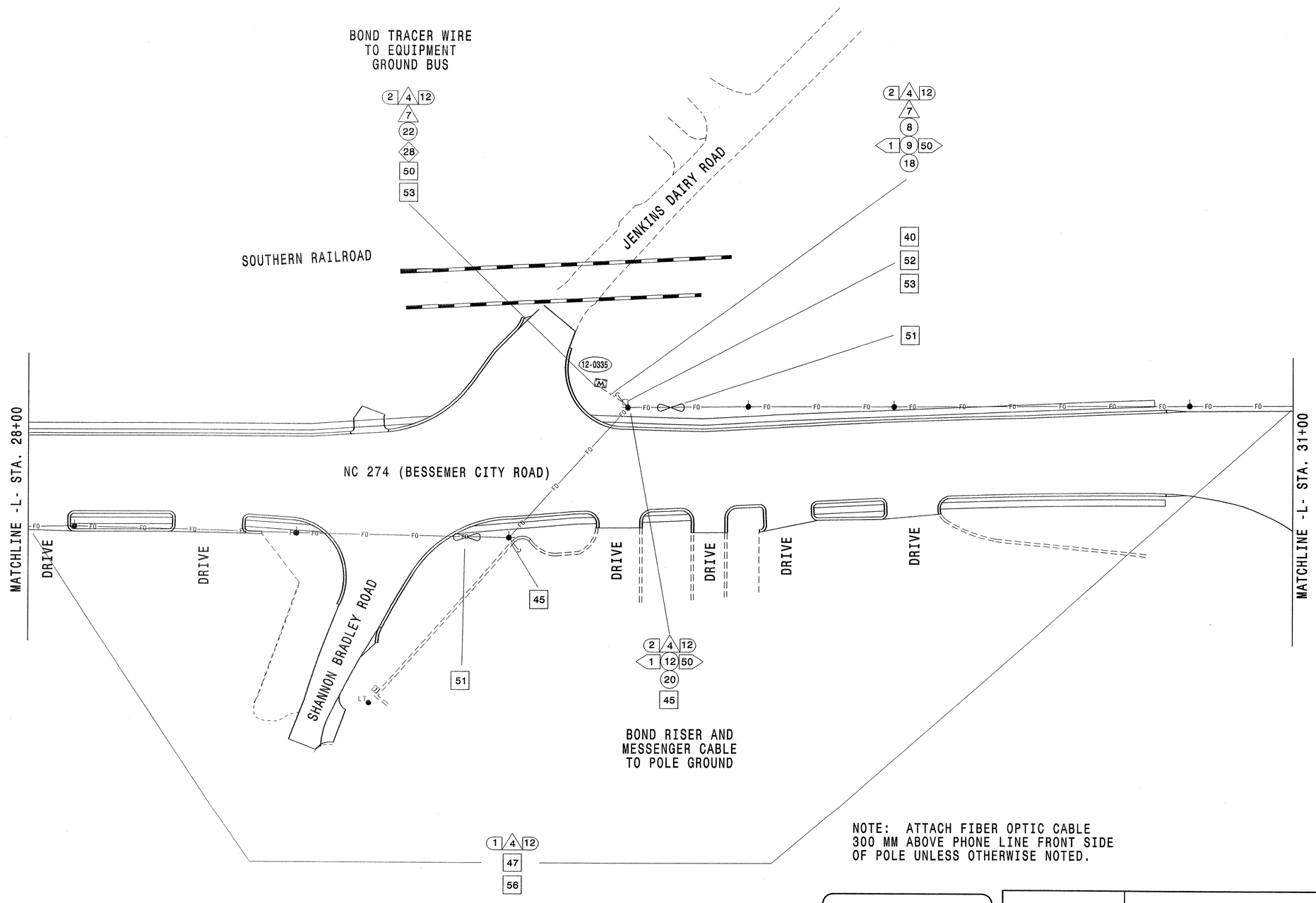

NOTE: ATTACH FIBER OPTIC CABLE
300 MM ABOVE PHONE LINE FRONT SIDE
OF POLE UNLESS OTHERWISE NOTED.

Prepared in the Office of:
THE LPA GROUP
TRANSPORTATION CONSULTANTS
THE LPA GROUP of North Carolina, p.a.
1204 PORTSMOUTH COURT, SUITE 201
Raleigh, North Carolina 27606

Traffic Engineering and Safety Systems Branch
STATE OF NORTH CAROLINA
DEPARTMENT OF TRANSPORTATION
Signals and Geometrics Section

SCALE
5 0 10
1:500

COMMUNICATION CABLE AND ROUTING PLAN

DIVISION 12 GASTON COUNTY GASTONIA

PLAN DATE: FEBRUARY 18, 2003 REVIEWED BY: ROB DUBNICKA, PE

PREPARED BY: AP SPENCER REVIEWED BY:

REVISIONS	INIT.	DATE

SEAL
NORTH CAROLINA PROFESSIONAL SEAL 027742 ENGINEER ROBERT J. DUBNICKA

Robert J. Dubnicka 8-9-04
SIGNATURE DATE

SIG. INVENTORY NO.

09-AUG-2004 15:34
V:\Traffic\U2408\u2408route\RTE10.dgn
rdubnicka

METRIC	PROJECT REFERENCE NO.	SHEET NO.
	U-2408	SIG. 86

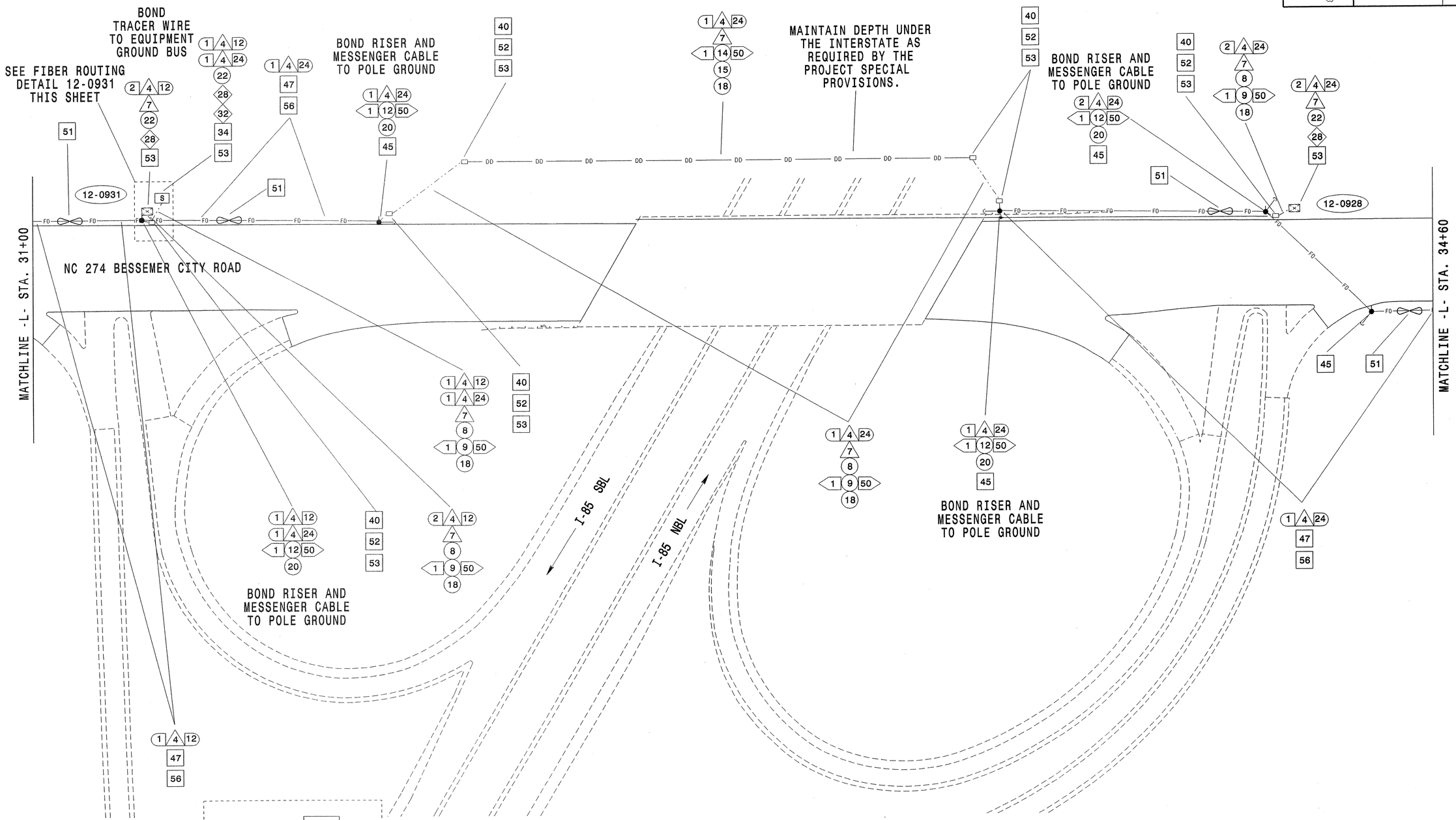

NOTE: ATTACH FIBER OPTIC CABLE 300 MM ABOVE PHONE LINE FRONT SIDE OF POLE UNLESS OTHERWISE NOTED.

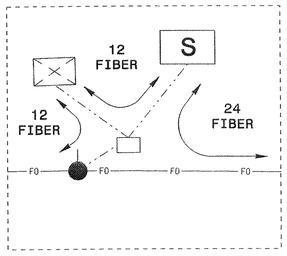

FIBER ROUTING DETAIL
12-0931

Prepared in the Office of:
THE LPA GROUP TRANSPORTATION CONSULTANTS
THE LPA GROUP of North Carolina, p.a.
4144 Professional Court, Suite 201
Raleigh, North Carolina 27609

Traffic Engineering and Safety Systems Branch
Signals and Geometrics Section
STATE OF NORTH CAROLINA DEPARTMENT OF TRANSPORTATION

SCALE 5 0 10
1:500

COMMUNICATION CABLE AND ROUTING PLAN

DIVISION 12 GASTON COUNTY GASTONIA

PLAN DATE: FEBRUARY 18, 2003 REVIEWED BY: ROB DUBNICKA, PE

PREPARED BY: AP SPENCER REVIEWED BY:

REVISIONS	INIT.	DATE

SEAL
NORTH CAROLINA PROFESSIONAL SEAL 027742 ENGINEER ROBERT J. DUBNICKA
SIGNATURE DATE 8-9-04
SIG. INVENTORY NO.

06-AUG-2004 15:33
V:\Proj\U-2408\U2408sig02route#RTE11.dgn
rdubnicka

METRIC	PROJECT REFERENCE NO.	SHEET NO.
	U-2408	SIG. 87

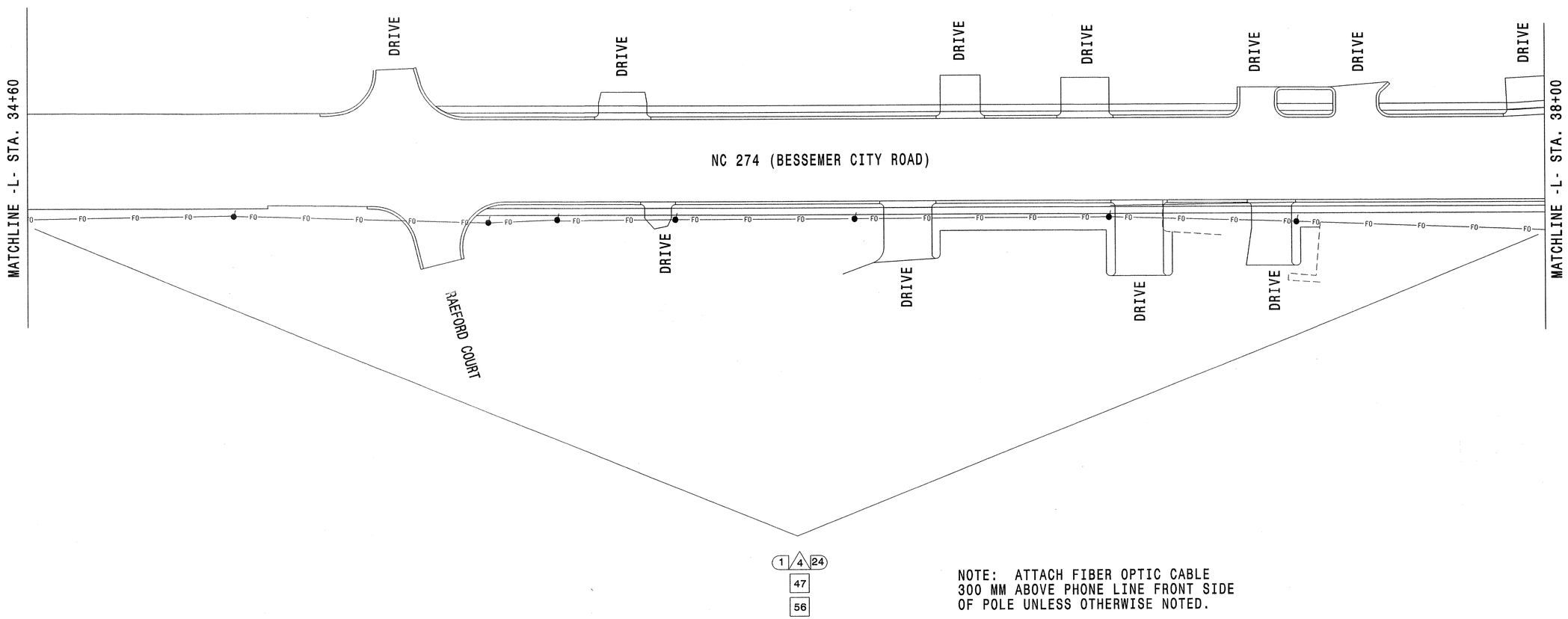

NOTE: ATTACH FIBER OPTIC CABLE 300 MM ABOVE PHONE LINE FRONT SIDE OF POLE UNLESS OTHERWISE NOTED.

Prepared in the Office of:

THE LPA GROUP
TRANSPORTATION CONSULTANTS

THE LPA GROUP of North Carolina, p.a.
4204 PROFESSIONAL COURT, SUITE 201
Raleigh, North Carolina 27609

Traffic Engineering and Safety Systems Branch
STATE OF NORTH CAROLINA
DEPARTMENT OF TRANSPORTATION
Signals and Geometrics Section

SCALE
5 0 10
1:500

COMMUNICATION CABLE AND ROUTING PLAN

DIVISION 12 GASTON COUNTY GASTONIA

PLAN DATE: FEBRUARY 18,2003 REVIEWED BY: ROB DUBNICKA,PE

PREPARED BY: AP SPENCER REVIEWED BY:

REVISIONS	INIT.	DATE

SEAL

NORTH CAROLINA PROFESSIONAL SEAL 027742 ENGINEER ROBERT J. DUBNICKA

Robert J. Dubnicka 8-9-04
SIGNATURE DATE

SIG. INVENTORY NO.

09-AUG-2004 15:33
Y:\Traffic\U2408\u2408route\RTE12.dgn
rdubnicka

METRIC	PROJECT REFERENCE NO.	SHEET NO.
	U-2408	SIG. 88

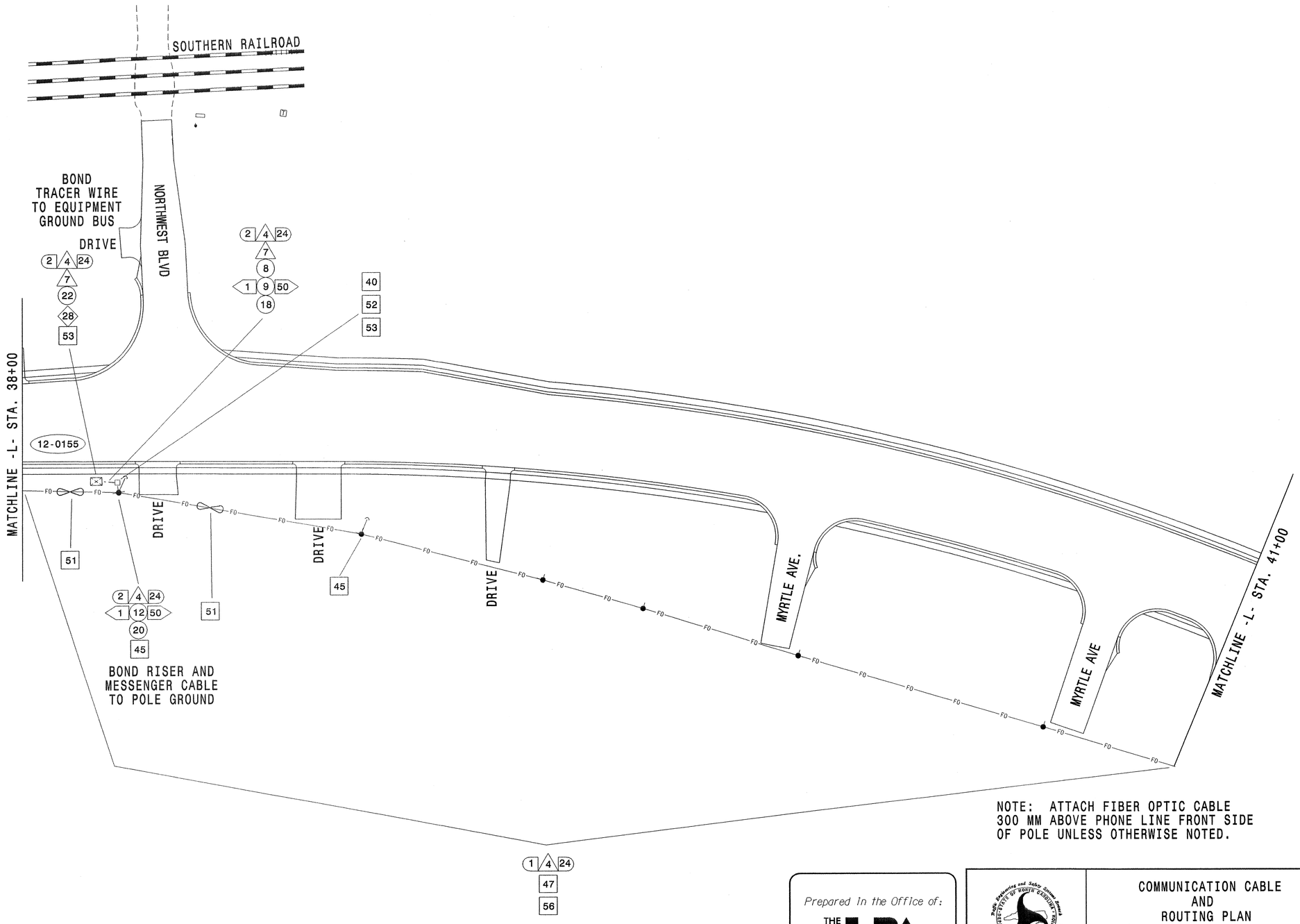

NOTE: ATTACH FIBER OPTIC CABLE 300 MM ABOVE PHONE LINE FRONT SIDE OF POLE UNLESS OTHERWISE NOTED.

Prepared in the Office of:

THE LPA GROUP TRANSPORTATION CONSULTANTS

THE LPA GROUP of North Carolina, p.a.
4404 PROFESSIONAL CIRCLE, SUITE 201
Raleigh, North Carolina 27609

Traffic Engineering and Safety Systems Branch
STATE OF NORTH CAROLINA
DEPARTMENT OF TRANSPORTATION
Signals and Geometrics Section

COMMUNICATION CABLE AND ROUTING PLAN

DIVISION 12 GASTON COUNTY GASTONIA

PLAN DATE: FEBRUARY 18, 2003 REVIEWED BY: ROB DUBNICKA, PE

PREPARED BY: AP SPENCER REVIEWED BY:

REVISIONS	INIT.	DATE

SCALE 5 0 10 1:500

SEAL

NORTH CAROLINA PROFESSIONAL SEAL 027742 ENGINEER ROBERT J. DUBNICKA

Robert J. Dubnicka 8-9-04
SIGNATURE DATE

SIG. INVENTORY NO.

09-AUG-2004 15:33
r:\traffic\u2408\u2408route\RTE13.dgn
rdubnicka

METRIC	PROJECT REFERENCE NO.	SHEET NO.
	U-2408	SIG. 89

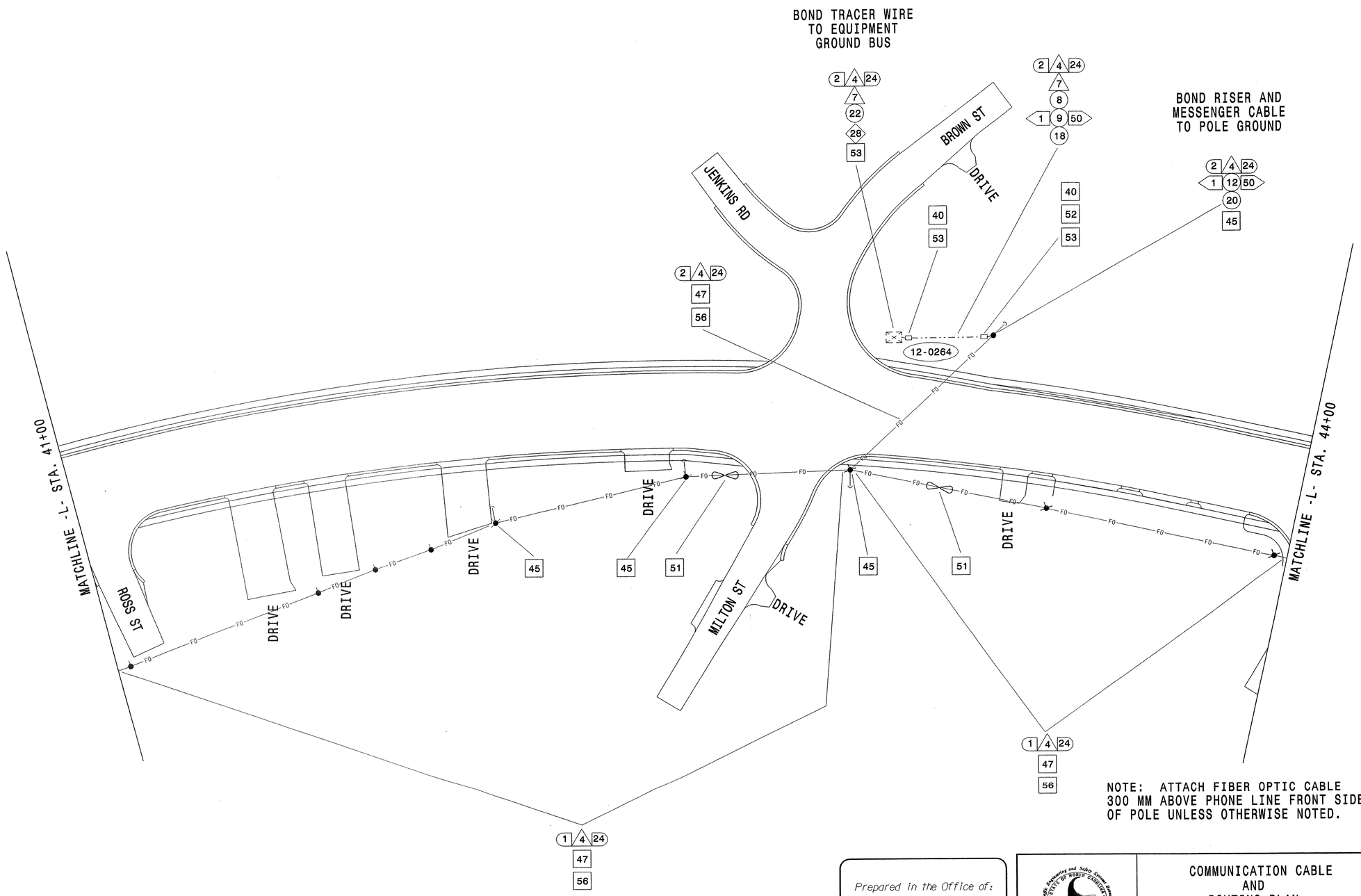

NOTE: ATTACH FIBER OPTIC CABLE 300 MM ABOVE PHONE LINE FRONT SIDE OF POLE UNLESS OTHERWISE NOTED.

Prepared in the Office of:

THE LPA GROUP TRANSPORTATION CONSULTANTS

THE LPA GROUP of North Carolina, p.a.
LOW PROFESSIONAL CONST. DIST 201
Raleigh, North Carolina 27606

Traffic Engineering and Safety Systems Branch
STATE OF NORTH CAROLINA
DEPARTMENT OF TRANSPORTATION
Signals and Geometrics Section

COMMUNICATION CABLE AND ROUTING PLAN

DIVISION 12 GASTON COUNTY GASTONIA

PLAN DATE: FEBRUARY 18,2003 REVIEWED BY: ROB DUBNICKA,PE

PREPARED BY: AP SPENCER REVIEWED BY:

REVISIONS	INIT.	DATE

SCALE 5 0 10 1:500

SEAL

NORTH CAROLINA PROFESSIONAL SEAL 027742 ENGINEER ROBERT J. DUBNICKA

Robert J. Dubnicka 8-9-04

SIGNATURE DATE

SIG. INVENTORY NO.

09-AUG-2004 15:33
Y:\traffic\M2408\u2408route\RTE14.dgn
rdubnicka

METRIC	PROJECT REFERENCE NO.	SHEET NO.
	U-2408	SIG. 90

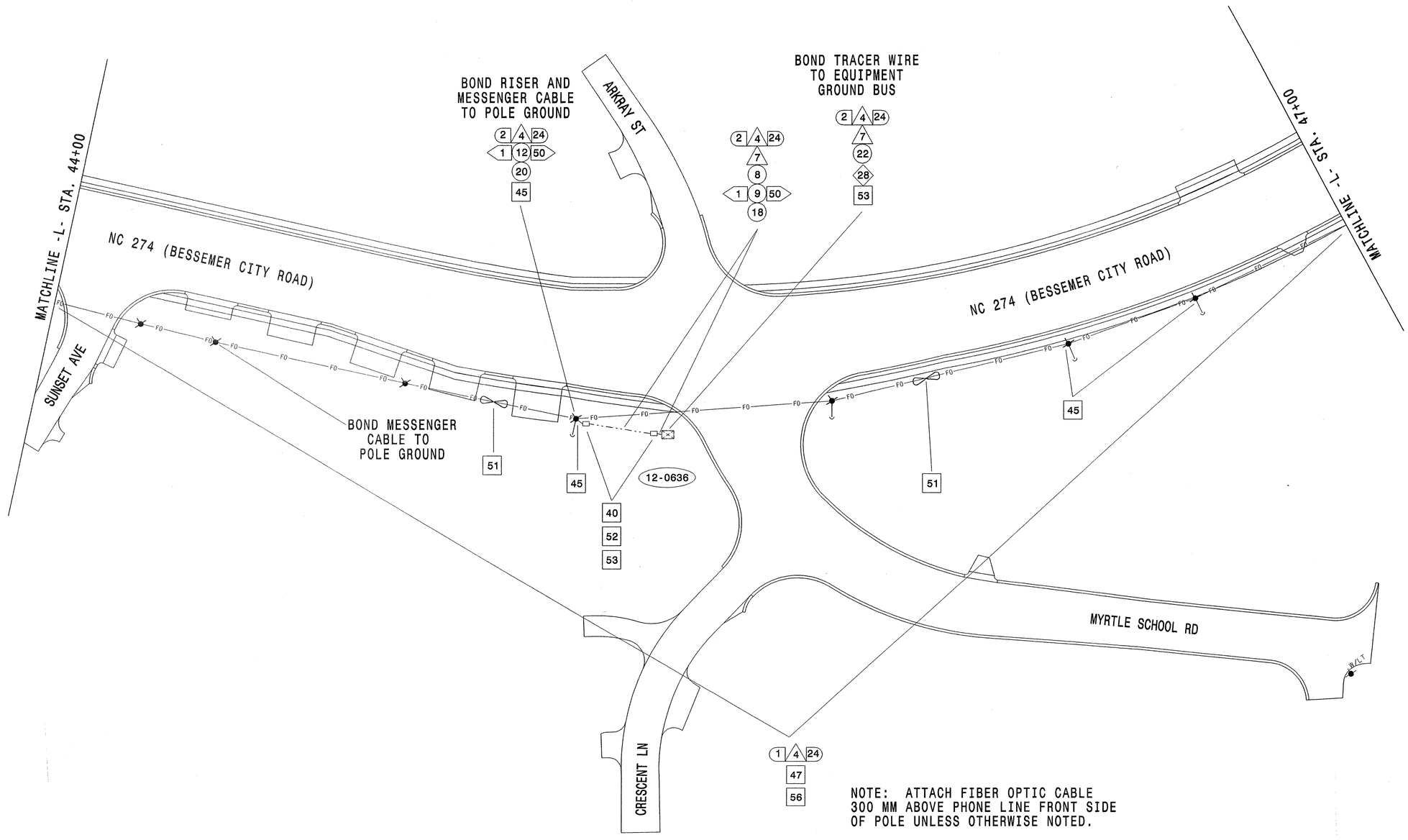

NOTE: ATTACH FIBER OPTIC CABLE 300 MM ABOVE PHONE LINE FRONT SIDE OF POLE UNLESS OTHERWISE NOTED.

Prepared in the Office of:

THE LPA GROUP TRANSPORTATION CONSULTANTS

THE LPA GROUP of North Carolina, p.a.

COMMUNICATION CABLE AND ROUTING PLAN

DIVISION 12 GASTON COUNTY GASTONIA

PLAN DATE: FEBRUARY 18, 2003 REVIEWED BY: ROB DUBNICKA, PE

PREPARED BY: AP SPENCER REVIEWED BY:

REVISIONS | INIT. | DATE

SCALE 5 0 10 1:500

SEAL

NORTH CAROLINA PROFESSIONAL SEAL 027742 ENGINEER ROBERT J. DUBNICKA

Robert J. Dubnicka 8-9-04

SIGNATURE DATE

SIG. INVENTORY NO.

09-AUG-2004 15:33
Y:\Traffic\U2408\u2408route\RTE15.dgn
rdubnicka

METRIC	PROJECT REFERENCE NO.	SHEET NO.
	U-2408	SIG. 91

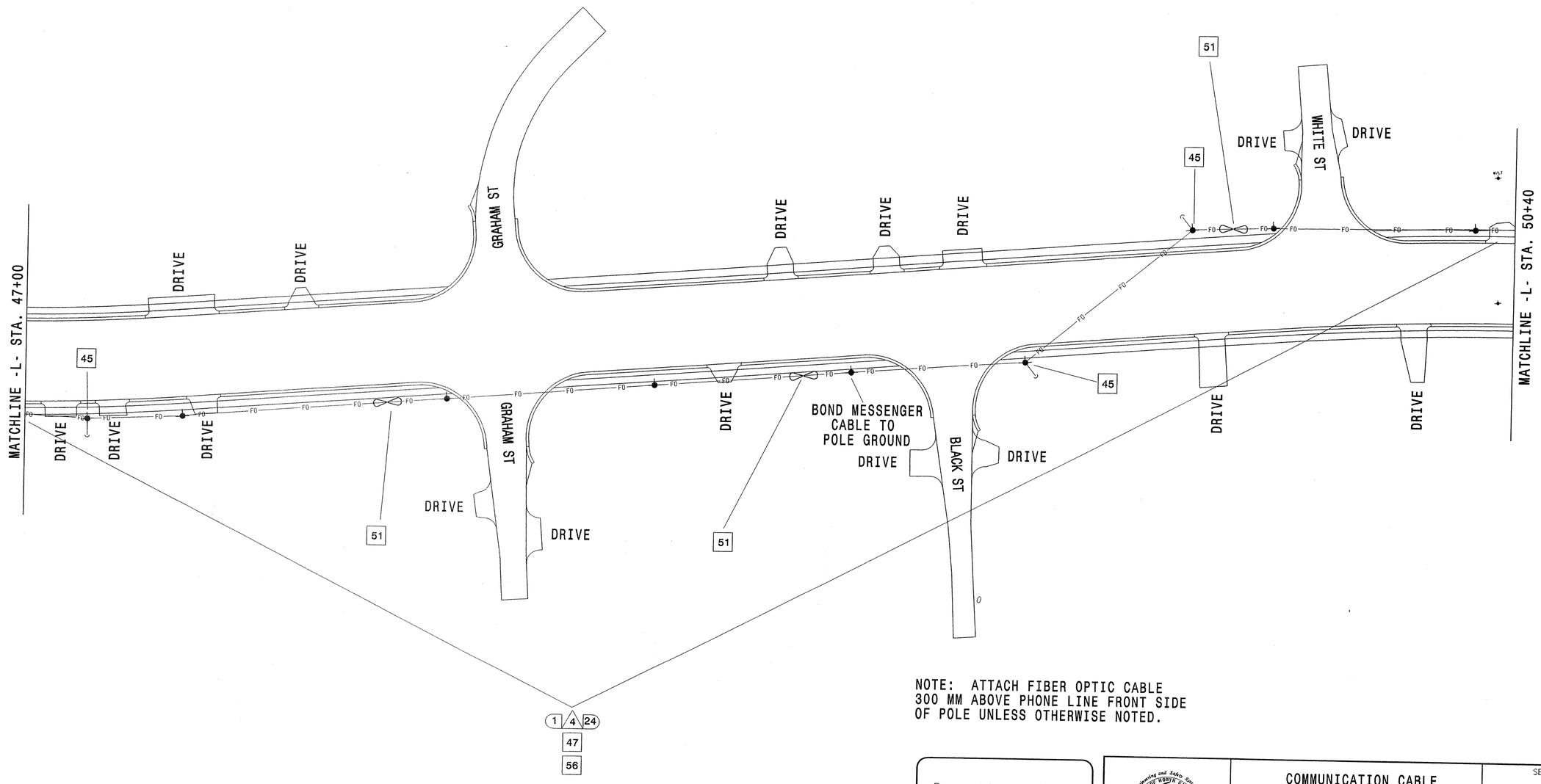

NOTE: ATTACH FIBER OPTIC CABLE 300 MM ABOVE PHONE LINE FRONT SIDE OF POLE UNLESS OTHERWISE NOTED.

Prepared in the Office of:
THE LPA GROUP
TRANSPORTATION CONSULTANTS

COMMUNICATION CABLE AND ROUTING PLAN

DIVISION 12 GASTON COUNTY GASTONIA

PLAN DATE: FEBRUARY 18, 2003 REVIEWED BY: ROB DUBNICKA, PE

PREPARED BY: AP SPENCER REVIEWED BY:

SCALE 5 0 10

REVISIONS INIT. DATE

SEAL

NORTH CAROLINA PROFESSIONAL SEAL 027742 ENGINEER ROBERT J. DUBNICKA

SIGNATURE DATE 8-9-04

09-AUG-2004 15:33
r:\traffic\u2408\u2408route\RTE16.dgn
rdubnicka

METRIC	PROJECT REFERENCE NO.	SHEET NO.
	U-2408	SIG. 92

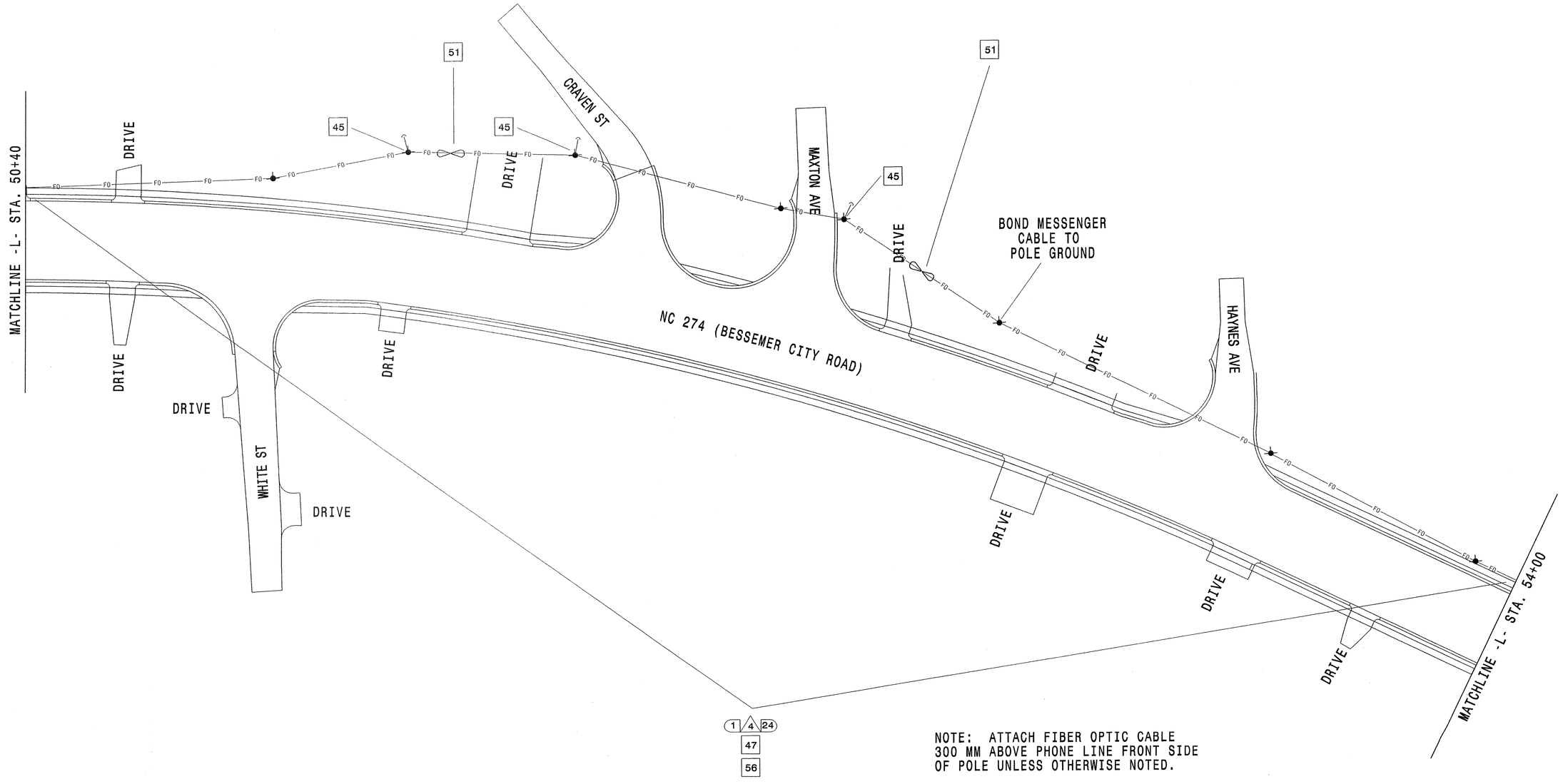

NOTE: ATTACH FIBER OPTIC CABLE 300 MM ABOVE PHONE LINE FRONT SIDE OF POLE UNLESS OTHERWISE NOTED.

Prepared in the Office of:

THE LPA GROUP TRANSPORTATION CONSULTANTS

THE LPA GROUP of North Carolina, p.a.
4804 PARKSIDE COURT, SUITE 201
Raleigh, North Carolina 27606

Traffic Engineering and Safety Systems Branch
STATE OF NORTH CAROLINA DEPARTMENT OF TRANSPORTATION
Signals and Geometrics Section

COMMUNICATION CABLE AND ROUTING PLAN

DIVISION 12 GASTON COUNTY GASTONIA

PLAN DATE: FEBRUARY 18, 2003	REVIEWED BY: ROB DUBNICKA, PE
PREPARED BY: AP SPENCER	REVIEWED BY:

REVISIONS	INIT.	DATE

SCALE 5 0 10 1:500

SEAL

NORTH CAROLINA PROFESSIONAL SEAL 027742 ENGINEER ROBERT J. DUBNICKA

Robert J. Dubnicka 8-9-04
SIGNATURE DATE

SIG. INVENTORY NO.

09-AUG-2004 15:33
Y:\traffic\u2408\u2408route\RTE17.dgn
rdubnicka

METRIC	PROJECT REFERENCE NO.	SHEET NO.
	U-2408	SIG. 93

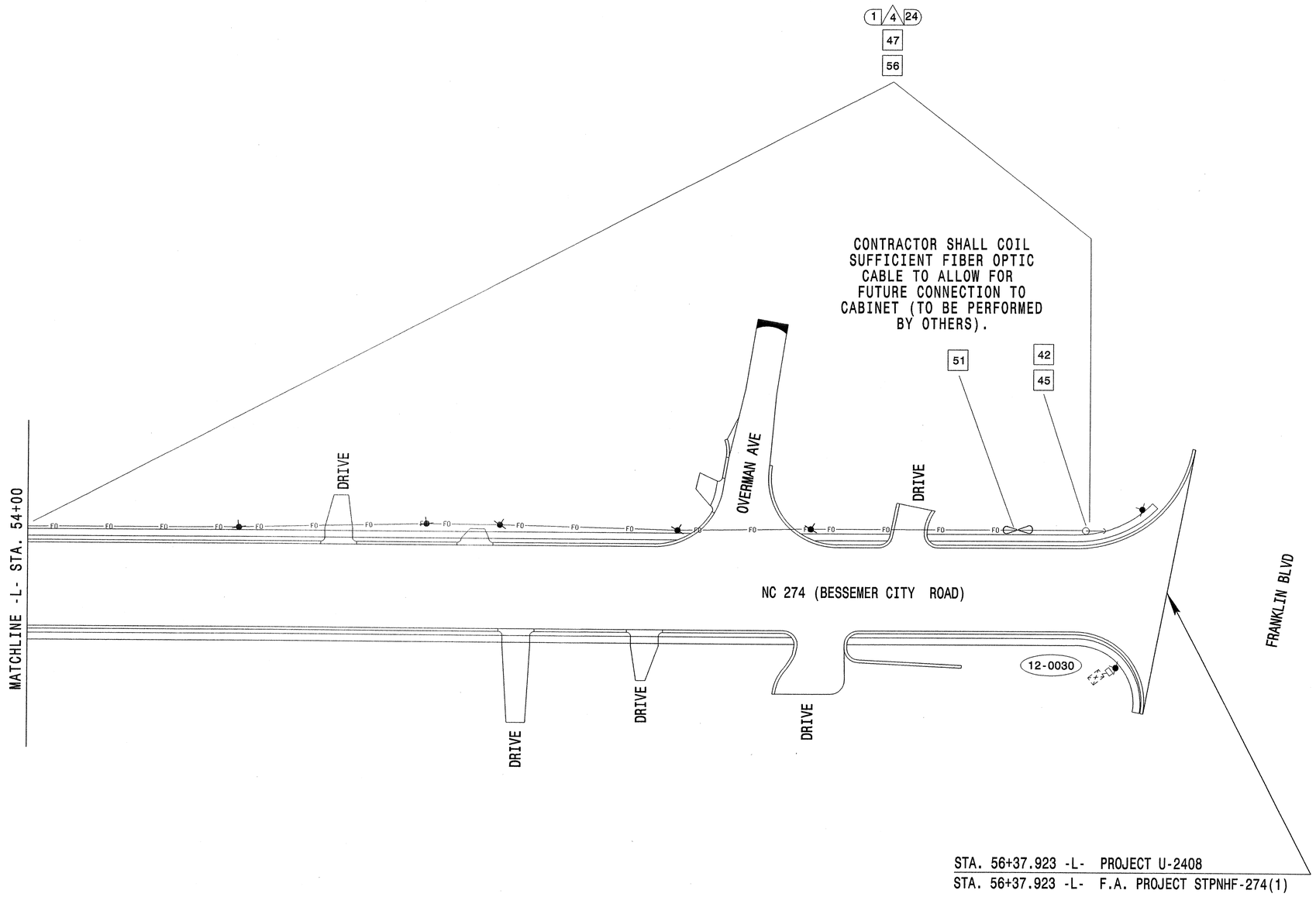

NOTE: ATTACH FIBER OPTIC CABLE 300 MM ABOVE PHONE LINE FRONT SIDE OF POLE UNLESS OTHERWISE NOTED.

Prepared in the Office of:

THE LPA GROUP TRANSPORTATION CONSULTANTS

THE LPA GROUP of North Carolina, p.a.

COMMUNICATION CABLE AND ROUTING PLAN

DIVISION 12 GASTON COUNTY GASTONIA

PLAN DATE: FEBRUARY 18,2003 REVIEWED BY: ROB DUBNICKA,PE

PREPARED BY: AP SPENCER REVIEWED BY:

REVISIONS	INIT.	DATE

SCALE 5 0 10 1:500

SEAL

NORTH CAROLINA PROFESSIONAL SEAL 027742 ENGINEER ROBERT J. DUBNICKA

Robert J. Dubnicka 8-9-04

SIGNATURE DATE

SIG. INVENTORY NO.