TIP PROJECT: I-2102

CONTRACT: C201429

See Sheet 1-A For Index of Sheets
See Sheet 1-B For Conventional Symbols

STATE OF NORTH CAROLINA
DIVISION OF HIGHWAYS

FORSYTH COUNTY

STATE	STATE PROJECT REFERENCE NO.	SHEET NO.	TOTAL SHEETS
N.C.	I-2102	1	

STATE PROJ. NO.	F. A. PROJ. NO.	DESCRIPTION
34153.1.1	IMF-40-3(101)182	P.E.
34153.2.1	IMF-40-3(101)182	R/W
34153.3.2	IMF-40-3(101)182	CONST.

LOCATION: I-40 AT (SR 1101) HARPER ROAD INTERCHANGE, APPROX. 0.9 MILES EAST OF THE YADKIN RIVER

TYPE OF WORK: STRUCTURE, GRADING, WIDENING, PAVING, DRAINAGE, AND SIGNALS

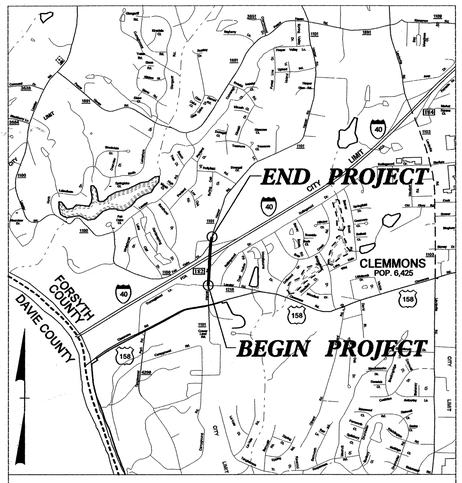

VICINITY MAP

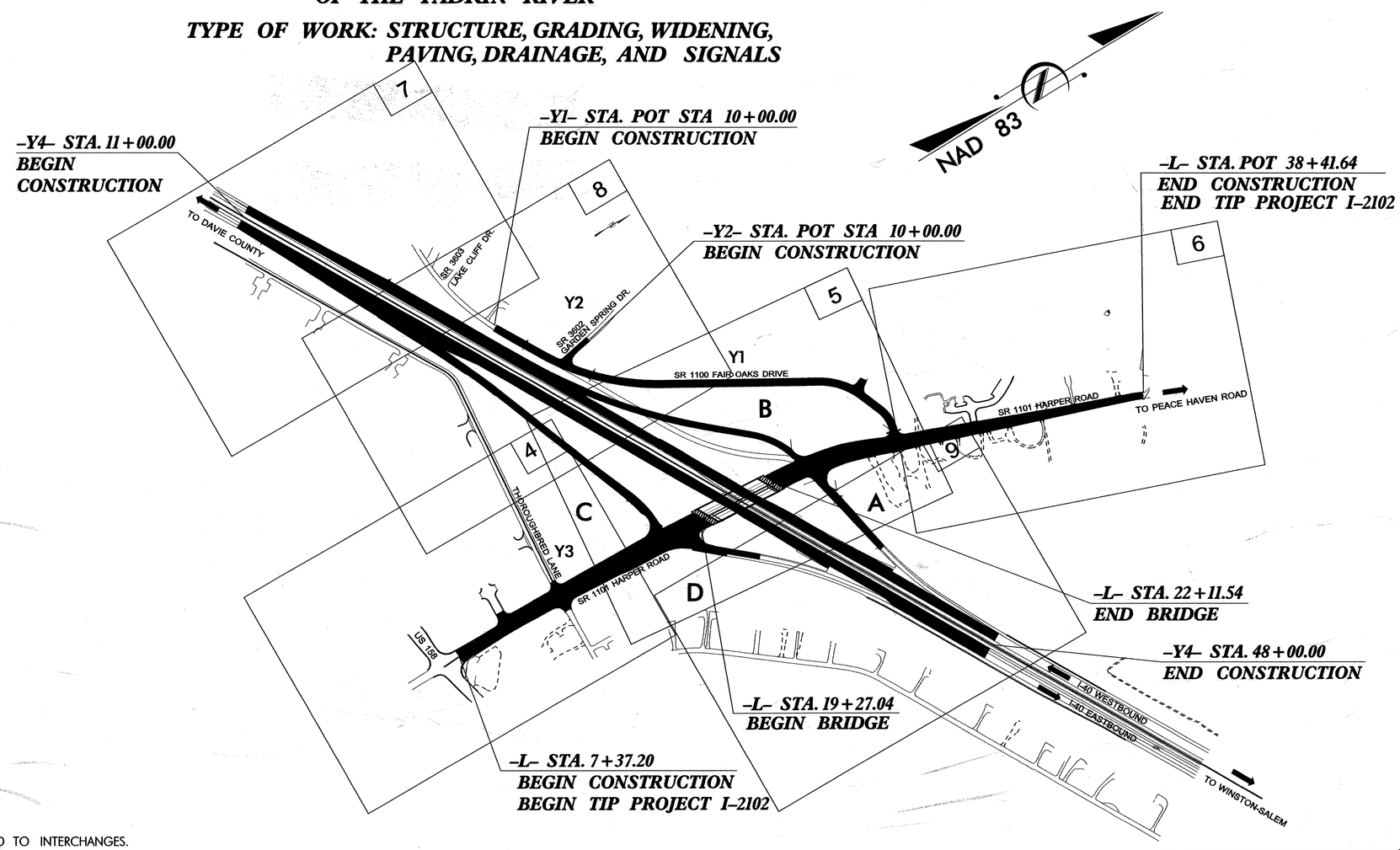

DESIGN EXCEPTION VERTICAL CURVATURE
THIS IS A CONTROLLED-ACCESS PROJECT WITH ACCESS BEING LIMITED TO INTERCHANGES.

GRAPHIC SCALES

50 25 0 50 100
PLANS

50 25 0 50 100
PROFILE (HORIZONTAL)

10 5 0 10 20
PROFILE (VERTICAL)

DESIGN DATA

ADT 2004 = 6580
ADT 2025 = 13300
DHV = 10 %
D = 60 %
T = 3 % *
V = 45 MPH

* TTST 1% DUAL 2%

PROJECT LENGTH

TOTAL LENGTH ROADWAY TIP PROJECT I-2102 = 0.534 MILES
TOTAL STRUCTURE LENGTH = 0.054 MILES
TOTAL LENGTH STATE TIP PROJECT I-2102 = 0.588 MILES

Prepared In the Office of:
DIVISION OF HIGHWAYS
NINTH DIVISION DESIGN / CONSTRUCT OFFICE
375 Silas Creek Parkway
WINSTON-SALEM, NORTH CAROLINA 27127

2002 STANDARD SPECIFICATIONS

RIGHT OF WAY DATE:
AUGUST 15, 2003

LETTING DATE:
MAY 16,2006

DAVID W. SPAINHOUR, P.E.
DIVISION OPERATIONS ENGINEER

EVAN E. ANDREWS, P.E.
DIVISION DESIGN/CONSTRUCT ENGINEER

HYDRAULICS ENGINEER
NORTH CAROLINA PROFESSIONAL SEAL 12575 ENGINEER PAUL E. FISHER
SIGNATURE: P.E. 8-31-04

DESIGN/CONSTRUCT ENGINEER
NORTH CAROLINA PROFESSIONAL SEAL 27446 ENGINEER EVAN E. ANDREWS
SIGNATURE: P.E. 8-10-04

DIVISION OF HIGHWAYS
STATE OF NORTH CAROLINA

P.E.
STATE DESIGN ENGINEER

DEPARTMENT OF TRANSPORTATION
FEDERAL HIGHWAY ADMINISTRATION

APPROVED
DIVISION ADMINISTRATOR DATE

7/01/99

11-AUG-2004 09:24
R:\2102\34153_A_
Bicaudill.sa

PROJECT REFERENCE NO.	SHEET NO.
I-2102	1A

INDEX OF SHEETS

1	TITLE SHEET
1A	INDEX OF SHEETS, GENERAL NOTES & LIST OF STANDARDS
1B	CONVENTIONAL SYMBOLS
2, 2-A, 2-B	TYPICAL SECTIONS
2-C	INTERSECTION / BRIDGE DETAILS
2-D	GUIDE FOR GRADING SUBGRADE
2-E	REINFORCED BRIDGE APPROACH FILLS
2-F	REINFORCED BRIDGE APPROACH FILLS
2-G	CONVERT EXISTING OPEN THROAT CATCH BASIN TO MEDIAN DROP INLET
2-H	DROP INLET INSTALLATION IN EXPRESSWAY GUTTER
2-I	DETAIL FOR CONCRETE BRIDGE APPROACH DROP INLET
2-J	DRIVEWAY TURNOUT
2-K	RETROFITTING DETECTABLE WARNING DOMES ONTO EXISTING WHEELCHAIR RAMP
2-L	WHEELCHAIR RAMP
2-M	GUARDRAIL INSTALLATION
2-N	GUARDRAIL INSTALLATION
2-O	GUARDRAIL INSTALLATION
2-P	GUARDRAIL INSTALLATION
2-Q	STRUCTURE ANCHOR UNITS
2-R	STRUCTURE ANCHOR UNITS
2-S	STANDARD TEMPORARY SHORING FOR MAINTENANCE OF TRAFFIC
2-T Milled Rumble Strip Detail	
3 (2 Sheets)	SUMMARY OF QUANTITIES
3-A, 3-B, 3-C	PIPE SUMMARY
3-D	COMBINATION SUMMARY OF QUANTITIES SHEET
3-E	RIGHT OF WAY SUMMARY SHEET
3-F	PARCEL INDEX SHEET
4-9	PLAN SHEET
10	L PROFILE
11	L PROFILE / RAMP A PROFILE
12	RAMP B PROFILE
13	RAMP C PROFILE
14	RAMP D PROFILE
15	Y1 PROFILE
16	Y2 PROFILE
17	Y3 PROFILE
18	Y4 POFILE
TCP-1 THRU TCP-25	TRAFFIC CONTROL PLANS
PM-1 THRU PM-4	PAVEMENT MARKING PLANS
EC-1 THRU EC-14	EROSION CONTROL PLANS
SIGN-1 THRU SIGN-11	SIGNING PLANS
SIG-1 THRU SIG-17	SIGNAL PLANS
UC-1 THRU UC-6	UTILITY CONSTRUCTION PLANS
UO-1 THRU UO-4	UTILITIES BY OTHERS PLANS
X-1A	CROSS SECTION SUMMARY
X-1 THRU X-78	CROSS SECTIONS
S-1 THRU S-51	STRUCTURE PLANS
W-1 THRU W-3	RETAINING WALL PLANS

GENERAL NOTES: 2002 SPECIFICATIONS
EFFECTIVE: 01-15-02

GRADE LINE:
GRADING AND SURFACING OR RESURFACING AND WIDENING:

THE GRADE LINES SHOWN DENOTE THE FINISHED ELEVATION OF THE PROPOSED SURFACING AT GRADE POINTS SHOWN ON THE TYPICAL SECTIONS. WHERE NO GRADE LINES ARE SHOWN, THE PROFILES SHOWN DENOTE THE TOP ELEVATION OF THE EXISTING PAVEMENT ALONG THE CENTER LINE OF SURVEY ON WHICH THE PROPOSED RESURFACING WILL BE PLACED. GRADE LINES MAY BE ADJUSTED BY THE ENGINEER IN ORDER TO SECURE A PROPER TIE-IN.

CLEARING:

CLEARING ON THIS PROJECT SHALL BE PERFORMED TO THE LIMITS ESTABLISHED BY METHOD **III** .

SUPERELEVATION:

ALL CURVES ON THIS PROJECT SHALL BE SUPERELEVATED IN ACCORDANCE WITH **STD. NO. 225.04** USING THE RATE OF SUPERELEVATION AND RUNOFF SHOWN ON THE PLANS. SUPERELEVATION IS TO BE REVOLVED ABOUT THE GRADE POINTS SHOWN ON THE TYPICAL SECTIONS.

SHOULDER CONSTRUCTION:

ASPHALT AND EARTH SHOULDER CONSTRUCTION ON HIGH SIDE OF SUPERELEVATED CURVES SHALL BE IN ACCORDANCE WITH **STD. NO. 560.02.**

SIDE ROADS:

THE CONTRACTOR WILL BE REQUIRED TO DO ALL NECESSARY WORK TO PROVIDE SUITABLE CONNECTIONS WITH ALL ROADS, STREETS, AND DRIVES ENTERING THIS PROJECT. THIS WORK WILL BE PAID FOR AT THE CONTRACT UNIT PRICE FOR THE PARTICULAR ITEMS INVOLVED.

DRIVEWAYS:

DRIVEWAYS SHALL BE CONSTRUCTED IN ACCORDANCE WITH DETAILS IN PLANS AT LOCATIONS SHOWN ON PLANS OR AS DIRECTED BY THE ENGINEER.

STREET RETURNS SHALL BE CONSTRUCTED IN ACCORDANCE WITH **STD. NO. 848.04** USING THE RADII NOTED ON PLANS.

GUARDRAIL:

THE GUARDRAIL LOCATIONS SHOWN ON THE PLANS MAY BE ADJUSTED DURING CONSTRUCTION AS DIRECTED BY THE ENGINEER. THE CONTRACTOR SHOULD CONSULT WITH THE ENGINEER PRIOR TO ORDERING GUARDRAIL MATERIAL.

TEMPORARY SHORING:

SHORING REQUIRED FOR THE MAINTENANCE OF TRAFFIC NOT SHOWN ON THE PLANS WILL BE PAID FOR AT THE CONTRACT PRICE FOR "TEMPORARY SHORING" OR "TEMPORARY SHORING-BARRIER SUPPORTED" DEPENDING UPON THE LOCATION OF THE SHORING.

SUBSURFACE PLANS:

NO SUBSURFACE PLANS ARE AVAILABLE ON THIS PROJECT. THE CONTRACTOR SHOULD MAKE HIS OWN INVESTIGATION AS TO THE SUBSURFACE CONDITIONS.

END BENTS:

THE ENGINEER SHALL CHECK THE STRUCTURE END BENT PLANS, DETAILS, AND CROSS-SECTION PRIOR TO SETTING OF THE SLOPE STAKES FOR THE EMBANKMENT OR EXCAVATION APPROACHING A BRIDGE.

UTILITIES:

UTILITY OWNERS ON THIS PROJECT ARE :

PIEDMONT GAS	**DUKE ENERGY(DISTRIBUTION)**
BELL SOUTH	**TIME WARNER**

ANY RELOCATION OF EXISTING UTILITIES WILL BE ACCOMPLISHED BY OTHERS, EXCEPT AS SHOWN ON THE PLANS.

RIGHT-OF-WAY MARKERS:

ALL RIGHT-OF-WAY MARKERS ON THIS PROJECT SHALL BE PLACED BY CONTRACT.

EFF. 01-15-02

ROADWAY ENGLISH STANDARD DRAWINGS

The following Roadway Standards as appear in "Roadway Standard Drawings" Highway Design Branch - N. C. Department of Transportation - Raleigh, N. C., Dated January 15, 2002 are applicable to this project and by reference hereby are considered a part of these plans:

STD.NO.	TITLE
	DIVISION 2 - EARTHWORK
200.03	Method of Clearing - Method III
225.01	Guide for Grading Subgrade - Interstate and Freeway
225.02	Guide for Grading Subgrade - Secondary and Local
225.03	Deceleration and Acceleration Lanes
225.04	Method of Obtaining Superelevation - Two Lane Pavement
225.06	Method of Grading Sight Distance at Intersections
225.09	Guide for Shoulder and Ditch Transition at Grade Separations
	DIVISION 3 - PIPE CULVERTS
300.01	Method of Pipe Installation - Method `A'
310.10	Driveway Pipe Construction
	DIVISION 4 - MAJOR STRUCTURES
422.10	Reinforced Bridge Approach Fills
	DIVISION 5 - SUBGRADE, BASES AND SHOULDERS
560.02	Method of Shoulder Construction - High Side of Superelevated Curve - Method II
	DIVISION 6 - ASPHALT BASES AND PAVEMENTS
654.01	Pavement Repairs
665.01	Milled Rumble Strips - Asphalt Pavements
	DIVISION 8 - INCIDENTALS
840.00	Concrete Base Pad for Drainage Structures
840.01	Brick Catch Basin - 12" thru 54" Pipe
840.02	Concrete Catch Basin - 12" thru 54" Pipe
840.03	Frame, Grates and Hood - for Use on Standard Catch Basin
840.04	Concrete Catch Basin with Single and Multiple Pipes - 12" thru 48" Pipe
840.05	Brick Catch Basin with Single and Multiple Pipes - 12" thru 48" Pipe
840.14	Concrete Drop Inlet - 12" thru 30" Pipe
840.15	Brick Drop Inlet - 12" thru 30" Pipe
840.16	Drop Inlet Frame and Grates - for use with Std. Dwg.s 840.14 and 840.15
840.18	Concrete Median Drop Inlet Type `B' - 12" thru 36" Pipe
840.20	Frames and Wide Slot Flat Grates
840.22	Frames and Wide Slot Sag Grates
840.27	Brick Median Drop Inlet Type `B' - 12" thru 36" Pipe
840.34	Traffic Bearing Junction Box - for Use with Pipes 42" and Under
840.45	Precast Drainage Structure
840.66	Drainage Structure Steps
840.71	Concrete and Brick Pipe Plug
840.72	Pipe Collar
846.01	Concrete Curb, Gutter and Curb & Gutter
846.02	Expressway Gutter Transition for Drop Inlet
848.03	Driveway Turnout - Drop Curb Type
848.04	Street Turnout
848.05	Wheelchair Ramp - Curb Cut
850.01	Concrete Paved Ditches
850.10	Guide for Berm Drainage Outlet - 15" and 18" Pipe
852.01	Concrete Islands
852.06	Method for Placement of Drop Inlets in Concrete Islands
862.01	Guardrail Placement
862.03	Structure Anchor Units
866.02	Woven Wire Fence - with Wood Post
876.02	Guide for Rip Rap at Pipe Outlets
876.04	Drainage Ditches with Class `B' Rip Rap

6/2/99
08-AUG-2004 10:39
R:\2102_order_37_sht_1a.dgn
bleadill AT

PROJECT REFERENCE NO.	SHEET NO.
1-2102	1-B

*S.U.E = SUBSURFACE UTILITY ENGINEER

STATE OF NORTH CAROLINA
DIVISION OF HIGHWAYS

CONVENTIONAL SYMBOLS

ROADS & RELATED ITEMS

Edge of Pavement
Curb
Prop. Slope Stakes Cut — C
Prop. Slope Stakes Fill — F
Prop. Woven Wire Fence
Prop. Chain Link Fence
Prop. Barbed Wire Fence
Prop. Wheelchair Ramp — WCR
Curb Cut for Future Wheelchair Ramp — CCFR
Exist. Guardrail
Prop. Guardrail
Exist. Cable Guiderail
Prop. Cable Guiderail
Equality Symbol
Pavement Removal

RIGHT OF WAY

Baseline Control Point
Existing Right of Way Marker
Exist. Right of Way Line w/Marker
Prop. Right of Way Line with Proposed R/W Marker (Iron Pin & Cap)
Prop. Right of Way Line with Proposed (Concrete or Granite) R/W Marker
Exist. Control of Access Line — CA
Prop. Control of Access Line — CA
Exist. Easement Line — E
Prop. Temp. Construction Easement Line — E
Prop. Temp. Drainage Easement Line — TDE
Prop. Perm. Drainage Easement Line — PDE

HYDROLOGY

Stream or Body of Water
Flow Arrow
Disappearing Stream
Spring
Swamp Marsh
Shoreline
Falls, Rapids
Prop Lateral, Tail, Head Ditches — FLOW

STRUCTURES

MAJOR
Bridge, Tunnel, or Box Culvert — CONC
Bridge Wing Wall, Head Wall and End Wall — CONC WW

MINOR
Head & End Wall — CONC HW
Pipe Culvert
Footbridge
Drainage Boxes — CB
Paved Ditch Gutter

UTILITIES

Exist. Pole
Exist. Power Pole
Prop. Power Pole
Exist. Telephone Pole
Prop. Telephone Pole
Exist. Joint Use Pole
Prop. Joint Use Pole
Telephone Pedestal — T
Cable TV Pedestal — C
Hydrant
Satellite Dish
Exist. Water Valve
Sewer Clean Out
Power Manhole — P
Telephone Booth
Water Manhole — W
Light Pole
H-Frame Pole
Power Line Tower
Pole with Base
Gas Valve
Gas Meter
Telephone Manhole — T
Power Transformer
Sanitary Sewer Manhole
Storm Sewer Manhole — S
Tank; Water, Gas, Oil
Water Tank With Legs
Traffic Signal Junction Box — S
Fiber Optic Splice Box — F
Television or Radio Tower
Utility Power Line Connects to Traffic Signal Lines Cut Into the Pavement — TS TS

Recorded Water Line — W W
Designated Water Line (S.U.E.*) — W W
Sanitary Sewer — SS SS
Recorded Sanitary Sewer Force Main — FSS FSS
Designated Sanitary Sewer Force Main(S.U.E.*) — FSS FSS
Recorded Gas Line — G G
Designated Gas Line (S.U.E.*) — G G
Storm Sewer — S S
Recorded Power Line — P P
Designated Power Line (S.U.E.*) — P P
Recorded Telephone Cable — T T
Designated Telephone Cable (S.U.E.*) — T T
Recorded U/G Telephone Conduit — TC TC
Designated U/G Telephone Conduit (S.U.E.*) — TC TC
Unknown Utility (S.U.E.*) — ?UTL ?UTL
Recorded Television Cable — TV TV
Designated Television Cable (S.U.E.*) — TV TV
Recorded Fiber Optics Cable — FO FO
Designated Fiber Optics Cable (S.U.E.*) — FO FO
Exist. Water Meter — 0
U/G Test Hole (S.U.E.*)
Abandoned According to U/G Record — ATTUR
End of Information — E.O.I.

BOUNDARIES & PROPERTIES

State Line
County Line
Township Line
City Line
Reservation Line
Property Line
Property Line Symbol — PL
Exist. Iron Pin — EIP
Property Corner
Property Monument — ECM
Property Number — 123
Parcel Number — 6
Fence Line — WW & ISBW
Existing Wetland Boundaries — WLB
Proposed Wetland Boundaries — WLB
Existing Endangered Animal Boundaries — EAB
Existing Endangered Plant Boundaries — EPB

BUILDINGS & OTHER CULTURE

Buildings
Foundations
Area Outline
Gate
Gas Pump Vent or U/G Tank Cap
Church
School
Park
Cemetery
Dam
Sign — S
Well — W
Small Mine
Swimming Pool

TOPOGRAPHY

Loose Surface
Hard Surface
Change in Road Surface
Curb
Right of Way Symbol — R/W
Guard Post — GP
Paved Walk
Bridge
Box Culvert or Tunnel
Ferry
Culvert
Footbridge
Trail, Footpath
Light House

VEGETATION

Single Tree
Single Shrub
Hedge
Woods Line
Orchard
Vineyard — VINEYARD

RAILROADS

Standard Gauge — CSX TRANSPORTATION
RR Signal Milepost — MILEPOST 35
Switch — SWITCH

revised 11/09/00

5/28/99

09-AUG-2004 10:39
bleaudill
A:\1-2102.tsh

PROJECT REFERENCE NO.	SHEET NO.
I-2102	2
ROADWAY DESIGN ENGINEER	PAVEMENT DESIGN ENGINEER

NORTH CAROLINA PROFESSIONAL SEAL 27446 ENGINEER EVAN E. ANDREWS 7/6/04

NORTH CAROLINA PROFESSIONAL SEAL 27446 ENGINEER EVAN E. ANDREWS 7-8-04

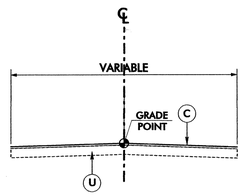

TYPICAL SECTION 1
–L– STA 7+37.20 TO STA 10+00.00

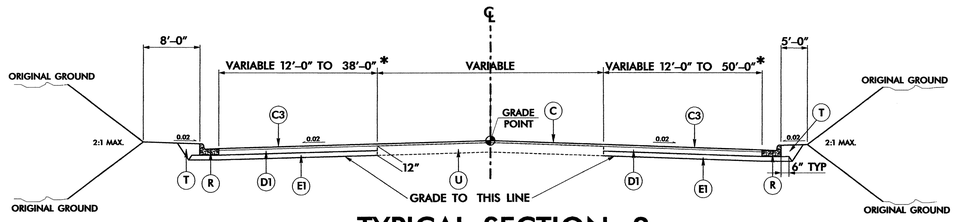

TYPICAL SECTION 2
–L– STA 10+00.00 TO 12+42.00
–L– STA 23+50.00 TO 38+41.64

*INCLUDES 2'-0" FOR BIKE LANE STA. 10+00.00 TO 28+00.00

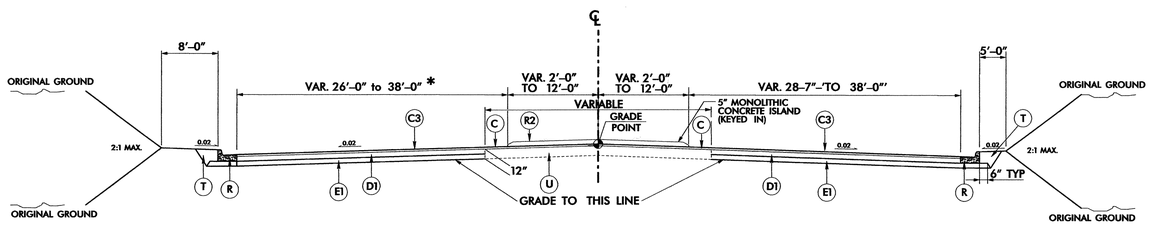

TYPICAL SECTION 3
–L– STA 12+42.00 TO 14+00.00

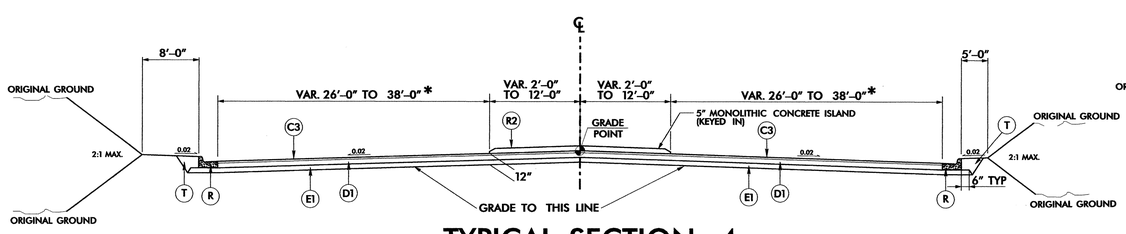

TYPICAL SECTION 4
–L– STA 14+00.00 TO 17+00.00

*INCLUDES 2'-0" FOR BIKE LANE STA. 10+00.00 TO 28+00.00

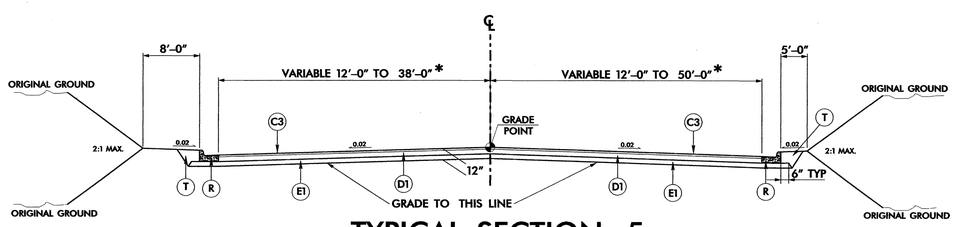

TYPICAL SECTION 5
–L– STA 17+00.00 TO 18+99.59
–L– STA 22+38.69 TO 23+50.00

*INCLUDES 2'-0" FOR BIKE LANE STA. 10+00.00 TO 28+00.00

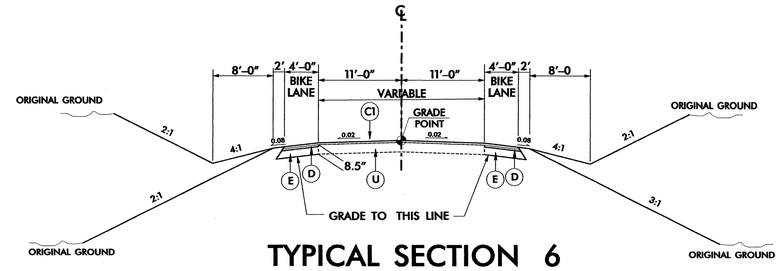

TYPICAL SECTION 6
–Y1– STA 10+00.00 TO 14+50.00
–Y1– STA 25+40.00 TO 28+41.05

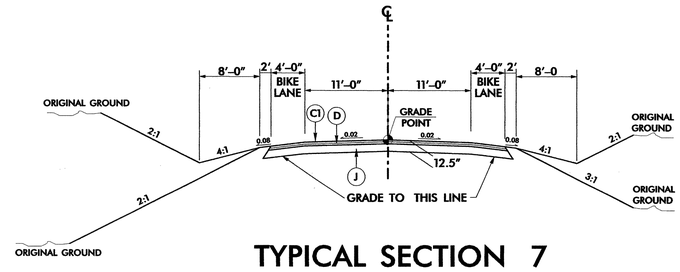

TYPICAL SECTION 7
–Y1– STA 14+50.00 TO 25+40.00

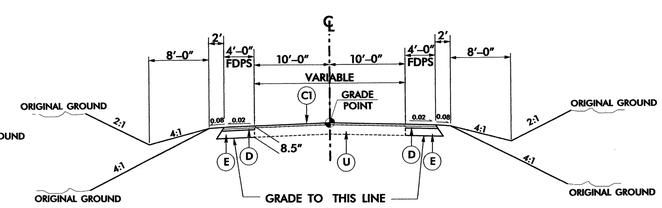

TYPICAL SECTION 8
–Y2– STA 10+00.00 TO 11+34.52

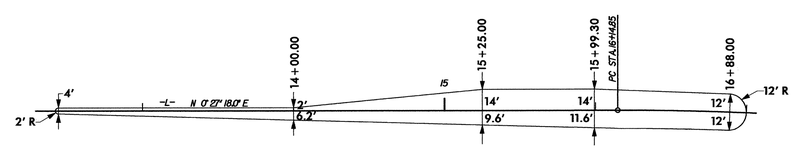

5" MONOLITHIC CONCRETE ISLAND (KEYED IN)
–L– STA 12+42.00 TO 17+00.00

PAVEMENT SCHEDULE	
B	PROP. APPROX. 5/8 " OPEN-GRADED ASPHALT FRICTION COURSE, TYPE FC2-MODIFIED, AT AN AVERAGE RATE OF 70 LBS. PER SQ. YD.
C	PROP. APPROX. 1¼" ASPHALT CONCRETE SURFACE COURSE, TYPE S9.5B, AT AN AVERAGE RATE OF 140 LBS. PER SQ. YD.
C1	PROP. APPROX. 1½" ASPHALT CONCRETE SURFACE COURSE, TYPE S9.5B, AT AN AVERAGE RATE OF 168 LBS. PER SQ. YD.
C2	PROP. APPROX. 2" ASPHALT CONCRETE SURFACE COURSE, TYPE S9.5B, AT AN AVERAGE RATE OF 224 LBS. PER SQ. YD.
C3	PROP. APPROX. 2½" ASPHALT CONCRETE SURFACE COURSE, TYPE S9.5B, AT AN AVERAGE RATE OF 140 LBS. PER SQ. YD. IN EACH OF TWO LAYERS.
C4	PROP. VAR. DEPTH ASPHALT CONCRETE SURFACE COURSE, TYPE S9.5B, AT AN AVERAGE RATE OF 112 LBS. PER SQ. YD. PER 1" DEPTH. TO BE PLACED IN LAYERS NOT TO EXCEED 1½" IN DEPTH.
D	PROP. APPROX. 3" ASPHALT CONCRETE INTERMEDIATE COURSE, TYPE I19.0B, AT AN AVERAGE RATE OF 342 LBS. PER SQ. YD.
D1	PROP. APPROX. 4½" ASPHALT CONCRETE INTERMEDIATE COURSE, TYPE I19.0B, AT AN AVERAGE RATE OF 513 LBS. PER SQ. YD.
D2	PROP. VAR. DEPTH ASPHALT CONCRETE INTERMEDIATE COURSE, TYPE I19.0B, AT AN AVERAGE RATE OF 114 LBS. PER SQ. YD. PER 1" DEPTH, TO BE PLACED IN LAYERS NOT LESS THAN 2¼" IN DEPTH OR GREATER THAN 4" IN DEPTH.
E	PROP. APPROX. 4" ASPHALT CONCRETE BASE COURSE, TYPE B25.0B, AT AN AVERAGE RATE OF 456 LBS. PER SQ. YD.
E1	PROP. APPROX. 5" ASPHALT CONCRETE BASE COURSE, TYPE B25.0B, AT AN AVERAGE RATE OF 570 LBS. PER SQ. YD.
E2	PROP. APPROX. 8½" ASPHALT CONCRETE BASE COURSE, TYPE B25.0B AT AN AVERAGE RATE OF 485 LBS. PER SQ. YD. IN EACH OF TWO LAYERS.
E3	PROP. APPROX. 6" ASPHALT CONCRETE BASE COURSE, TYPE B25.0B, AT AN AVERAGE RATE OF 342 LBS. PER SQ. YD. IN EACH OF TWO LAYERS.
E4	PROP. VAR. DEPTH ASPHALT CONCRETE BASE COURSE, TYPE B25.0B, AT AN AVERAGE RATE OF 114 LBS. PER SQ. YD. PER 1" DEPTH. TO BE PLACED IN LAYERS NOT LESS THAN 3" IN DEPTH OR GREATER THAN 5½" IN DEPTH.
J	8" ABC STONE
R	2'-6" CONCRETE CURB AND GUTTER.
R1	CONCRETE EXPRESSWAY GUTTER.
R2	5" MONOLITHIC CONCRETE ISLAND (KEYED IN).
U	EXISTING PAVEMENT.
T	EARTH MATERIAL.
W	WEDGING

6/2/99

R:\SHP-2004 16:25
R:\I2102_typ.dgn
bowdill AT

PROJECT REFERENCE NO.	SHEET NO.
1-2102	2A
ROADWAY DESIGN ENGINEER	PAVEMENT DESIGN ENGINEER

NORTH CAROLINA PROFESSIONAL SEAL 27446 ENGINEER ELAINE ANDREWS 9-8-04

NORTH CAROLINA PROFESSIONAL SEAL 27446 ENGINEER ELAINE ANDREWS 9-8-04

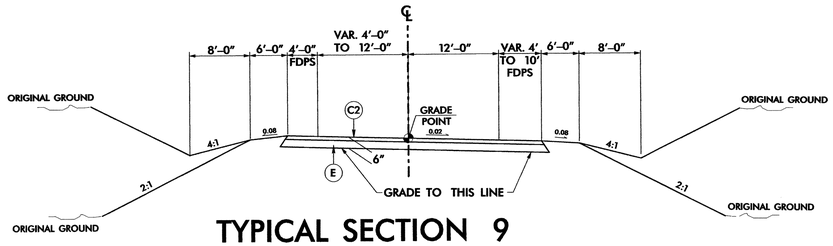

TYPICAL SECTION 9
RAMP C DETOUR STA 0+00.00 TO 3+40.88

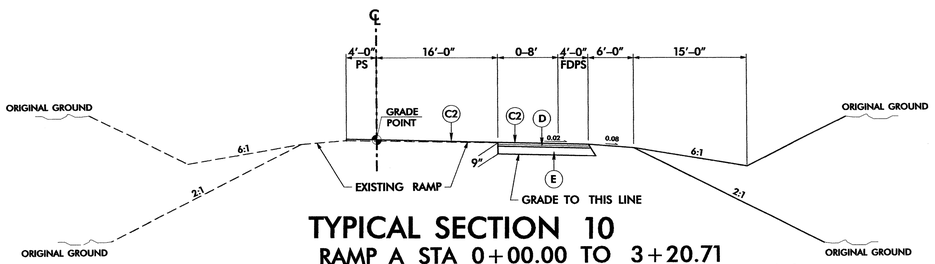

TYPICAL SECTION 10
RAMP A STA 0+00.00 TO 3+20.71
(MILL EXISTING RAMP AT PAVEMENT TIE-IN)

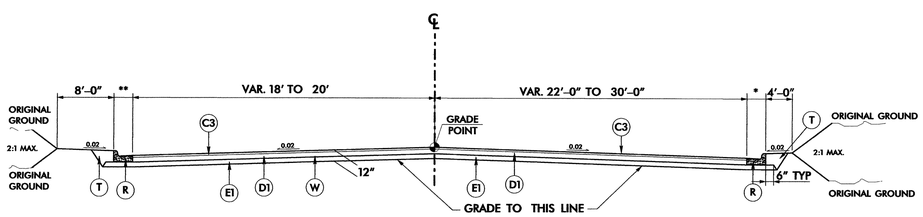

TYPICAL SECTION 11
RAMP A STA 3+20.71 TO 4+34.51
* RAMP D STA 2+00.00 TO 2+83.87 (RT) CURB BEGINS
** RAMP D STA 2+83.87 TO STA 3+40.87 (LT) CURB BEGINS

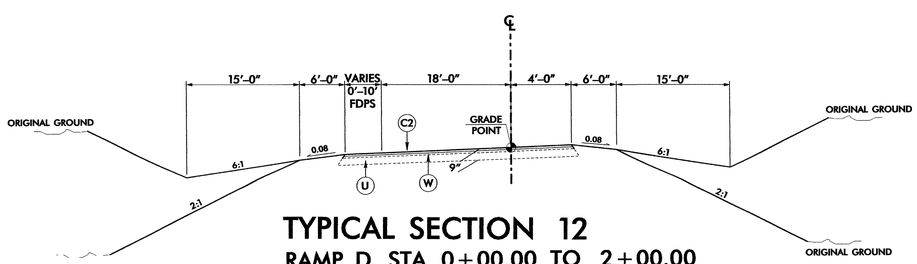

TYPICAL SECTION 12
RAMP D STA 0+00.00 TO 2+00.00
(MILL EXISTING RAMP AT PAVEMENT TIE-IN)

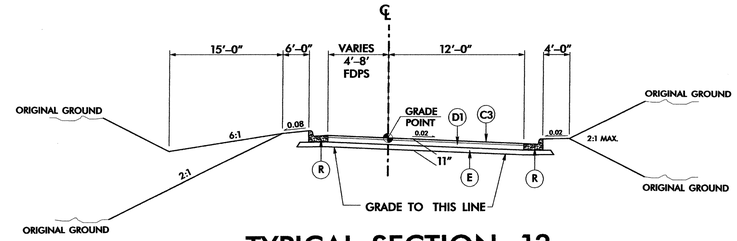

TYPICAL SECTION 13
RAMP C STA 15+66.18 TO STA 16+50.79

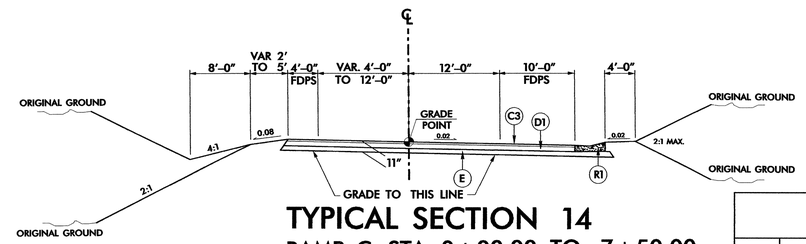

TYPICAL SECTION 14
RAMP C STA 0+00.00 TO 7+50.00

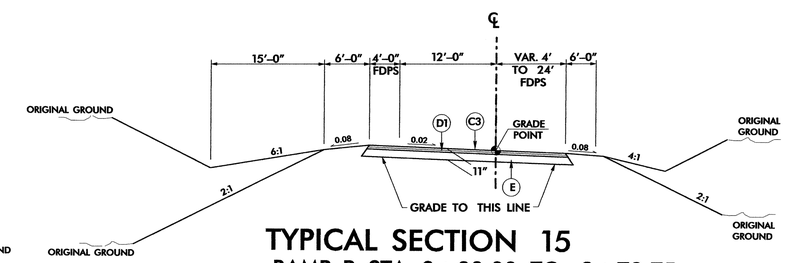

TYPICAL SECTION 15
RAMP B STA 0+00.00 TO 3+79.75

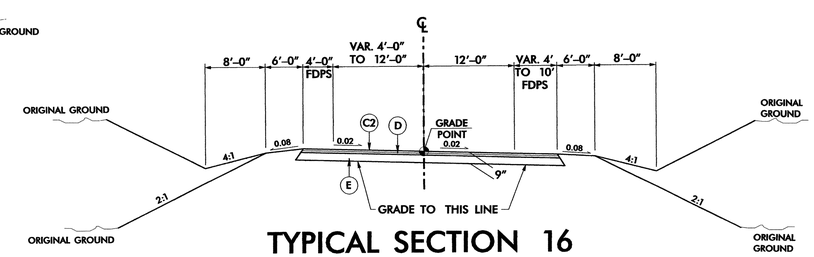

TYPICAL SECTION 16
RAMP C STA 7+50.00 TO 15+66.18
RAMP B STA 3+79.75 TO 12+71.37

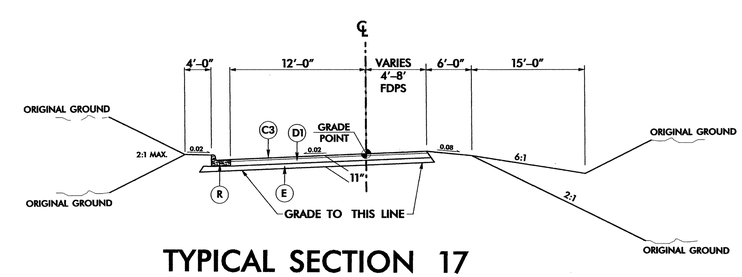

TYPICAL SECTION 17
RAMP B STA 12+71.37 TO STA 13+25.32

PAVEMENT SCHEDULE	
B	PROP. APPROX. 5/8 " OPEN-GRADED ASPHALT FRICTION COURSE, TYPE FC2-MODIFIED, AT AN AVERAGE RATE OF 70 LBS. PER SQ. YD.
C	PROP. APPROX. 1¼" ASPHALT CONCRETE SURFACE COURSE, TYPE S9.5B, AT AN AVERAGE RATE OF 140 LBS. PER SQ. YD.
C1	PROP. APPROX. 1½" ASPHALT CONCRETE SURFACE COURSE, TYPE S9.5B, AT AN AVERAGE RATE OF 168 LBS. PER SQ. YD.
C2	PROP. APPROX. 2" ASPHALT CONCRETE SURFACE COURSE, TYPE S9.5B, AT AN AVERAGE RATE OF 224 LBS. PER SQ. YD.
C3	PROP. APPROX. 2½" ASPHALT CONCRETE SURFACE COURSE, TYPE S9.5B, AT AN AVERAGE RATE OF 140 LBS. PER SQ. YD. IN EACH OF TWO LAYERS.
C4	PROP. VAR. DEPTH ASPHALT CONCRETE SURFACE COURSE, TYPE S9.5B, AT AN AVERAGE RATE OF 112 LBS. PER SQ. YD. PER 1" DEPTH. TO BE PLACED IN LAYERS NOT TO EXCEED 1½" IN DEPTH.
D	PROP. APPROX. 3" ASPHALT CONCRETE INTERMEDIATE COURSE, TYPE I19.0B, AT AN AVERAGE RATE OF 342 LBS. PER SQ. YD.
D1	PROP. APPROX. 4½" ASPHALT CONCRETE INTERMEDIATE COURSE, TYPE I19.0B, AT AN AVERAGE RATE OF 513 LBS. PER SQ. YD.
D2	PROP. VAR. DEPTH ASPHALT CONCRETE INTERMEDIATE COURSE, TYPE I19.0B, AT AN AVERAGE RATE OF 114 LBS. PER SQ. YD. PER 1" DEPTH, TO BE PLACED IN LAYERS NOT LESS THAN 2¼" IN DEPTH OR GREATER THAN 4" IN DEPTH.
E	PROP. APPROX. 4" ASPHALT CONCRETE BASE COURSE, TYPE B25.0B, AT AN AVERAGE RATE OF 456 LBS. PER SQ. YD.
E1	PROP. APPROX. 5" ASPHALT CONCRETE BASE COURSE, TYPE B25.0B, AT AN AVERAGE RATE OF 570 LBS. PER SQ. YD.
E2	PROP. APPROX. 8½" ASPHALT CONCRETE BASE COURSE, TYPE B25.0B AT AN AVERAGE RATE OF 485 LBS. PER SQ. YD. IN EACH OF TWO LAYERS.
E3	PROP. APPROX. 6" ASPHALT CONCRETE BASE COURSE, TYPE B25.0B, AT AN AVERAGE RATE OF 342 LBS. PER SQ. YD. IN EACH OF TWO LAYERS.
E4	PROP. VAR. DEPTH ASPHALT CONCRETE BASE COURSE, TYPE B25.0B, AT AN AVERAGE RATE OF 114 LBS. PER SQ. YD. PER 1" DEPTH. TO BE PLACED IN LAYERS NOT LESS THAN 3" IN DEPTH OR GREATER THAN 5½" IN DEPTH.
J	8" ABC STONE
R	2'-6" CONCRETE CURB AND GUTTER.
R1	CONCRETE EXPRESSWAY GUTTER.
R2	5" MONOLITHIC CONCRETE ISLAND (KEYED IN).
U	EXISTING PAVEMENT.
T	EARTH MATERIAL.
W	WEDGING

6/2/99
07-SEP-2004 16:26
R:\2102_2A.DGN
bowdill

PROJECT REFERENCE NO.	SHEET NO.
I-2102	2B
ROADWAY DESIGN ENGINEER	PAVEMENT DESIGN ENGINEER

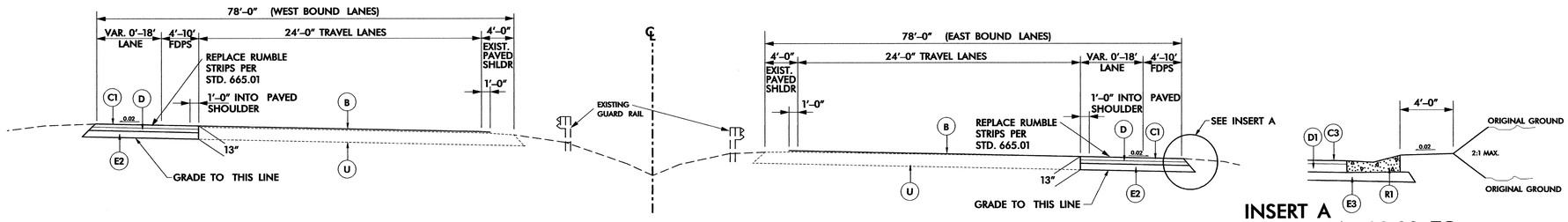

TYPICAL SECTION 18
-Y4- STA 11+62.00 TO 45+40.00

INSERT A
Y4 STA 16+00.00 TO STA 17+12.84

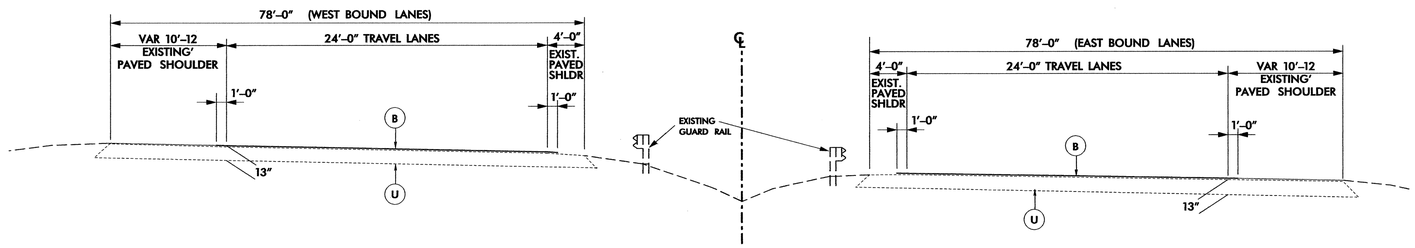

TYPICAL SECTION 19
-Y4- STA 11+00.00 TO 11+62.00
-Y4- STA 45+40.00 TO 48+00.00

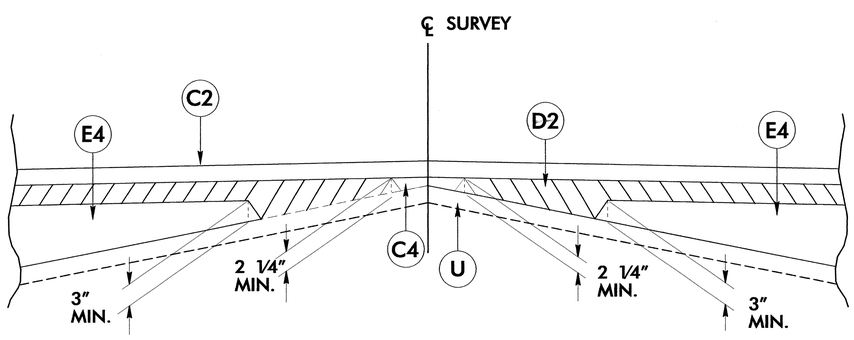

Detail Showing Method of Wedging

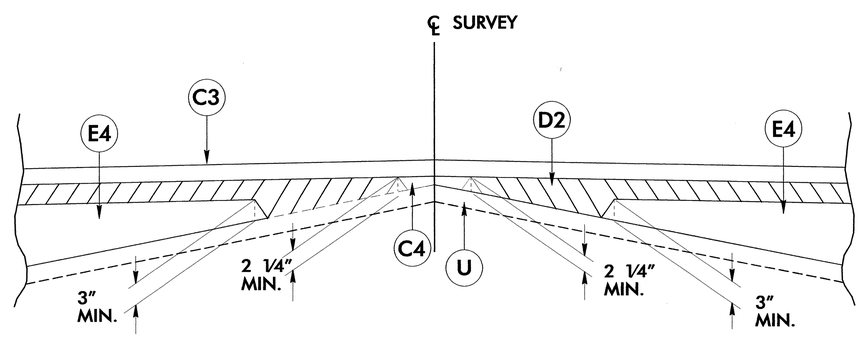

Detail Showing Method of Wedging

PAVEMENT SCHEDULE	
B	PROP. APPROX. ⅝ " OPEN-GRADED ASPHALT FRICTION COURSE, TYPE FC2-MODIFIED, AT AN AVERAGE RATE OF 70 LBS. PER SQ. YD.
C	PROP. APPROX. 1¼" ASPHALT CONCRETE SURFACE COURSE, TYPE S9.5B, AT AN AVERAGE RATE OF 140 LBS. PER SQ. YD.
C1	PROP. APPROX. 1½" ASPHALT CONCRETE SURFACE COURSE, TYPE S9.5B, AT AN AVERAGE RATE OF 168 LBS. PER SQ. YD.
C2	PROP. APPROX. 2" ASPHALT CONCRETE SURFACE COURSE, TYPE S9.5B, AT AN AVERAGE RATE OF 224 LBS. PER SQ. YD.
C3	PROP. APPROX. 2½" ASPHALT CONCRETE SURFACE COURSE, TYPE S9.5B, AT AN AVERAGE RATE OF 140 LBS. PER SQ. YD. IN EACH OF TWO LAYERS.
C4	PROP. VAR. DEPTH ASPHALT CONCRETE SURFACE COURSE, TYPE S9.5B, AT AN AVERAGE RATE OF 112 LBS. PER SQ. YD. PER 1" DEPTH. TO BE PLACED IN LAYERS NOT TO EXCEED 1½" IN DEPTH.
D	PROP. APPROX. 3" ASPHALT CONCRETE INTERMEDIATE COURSE, TYPE I19.0B, AT AN AVERAGE RATE OF 342 LBS. PER SQ. YD.
D1	PROP. APPROX. 4½" ASPHALT CONCRETE INTERMEDIATE COURSE, TYPE I19.0B, AT AN AVERAGE RATE OF 513 LBS. PER SQ. YD.
D2	PROP. VAR. DEPTH ASPHALT CONCRETE INTERMEDIATE COURSE, TYPE I19.0B, AT AN AVERAGE RATE OF 114 LBS. PER SQ. YD. PER 1" DEPTH, TO BE PLACED IN LAYERS NOT LESS THAN 2¼" IN DEPTH OR GREATER THAN 4" IN DEPTH.
E	PROP. APPROX. 4" ASPHALT CONCRETE BASE COURSE, TYPE B25.0B, AT AN AVERAGE RATE OF 456 LBS. PER SQ. YD.
E1	PROP. APPROX. 5" ASPHALT CONCRETE BASE COURSE, TYPE B25.0B, AT AN AVERAGE RATE OF 570 LBS. PER SQ. YD.
E2	PROP. APPROX. 8½" ASPHALT CONCRETE BASE COURSE, TYPE B25.0B AT AN AVERAGE RATE OF 485 LBS. PER SQ. YD. IN EACH OF TWO LAYERS.
E3	PROP. APPROX. 6" ASPHALT CONCRETE BASE COURSE, TYPE B25.0B, AT AN AVERAGE RATE OF 342 LBS. PER SQ. YD. IN EACH OF TWO LAYERS.
E4	PROP. VAR. DEPTH ASPHALT CONCRETE BASE COURSE, TYPE B25.0B, AT AN AVERAGE RATE OF 114 LBS. PER SQ. YD. PER 1" DEPTH. TO BE PLACED IN LAYERS NOT LESS THAN 3" IN DEPTH OR GREATER THAN 5½" IN DEPTH.
J	8" ABC STONE
R	2'-6" CONCRETE CURB AND GUTTER.
R1	CONCRETE EXPRESSWAY GUTTER.
R2	5" MONOLITHIC CONCRETE ISLAND (KEYED IN).
U	EXISTING PAVEMENT.
T	EARTH MATERIAL.
W	WEDGING

6/2/99

07-SEP-2004 16:26
R:\2102_01.DGN
bloomquist

PROJECT REFERENCE NO.	SHEET NO.
I-2102	2-C

INTERSECTION DETAIL

$$\text{EST TRAFFIC VOLUME} = \frac{\text{2001 ADT}}{\text{2025 ADT}}$$

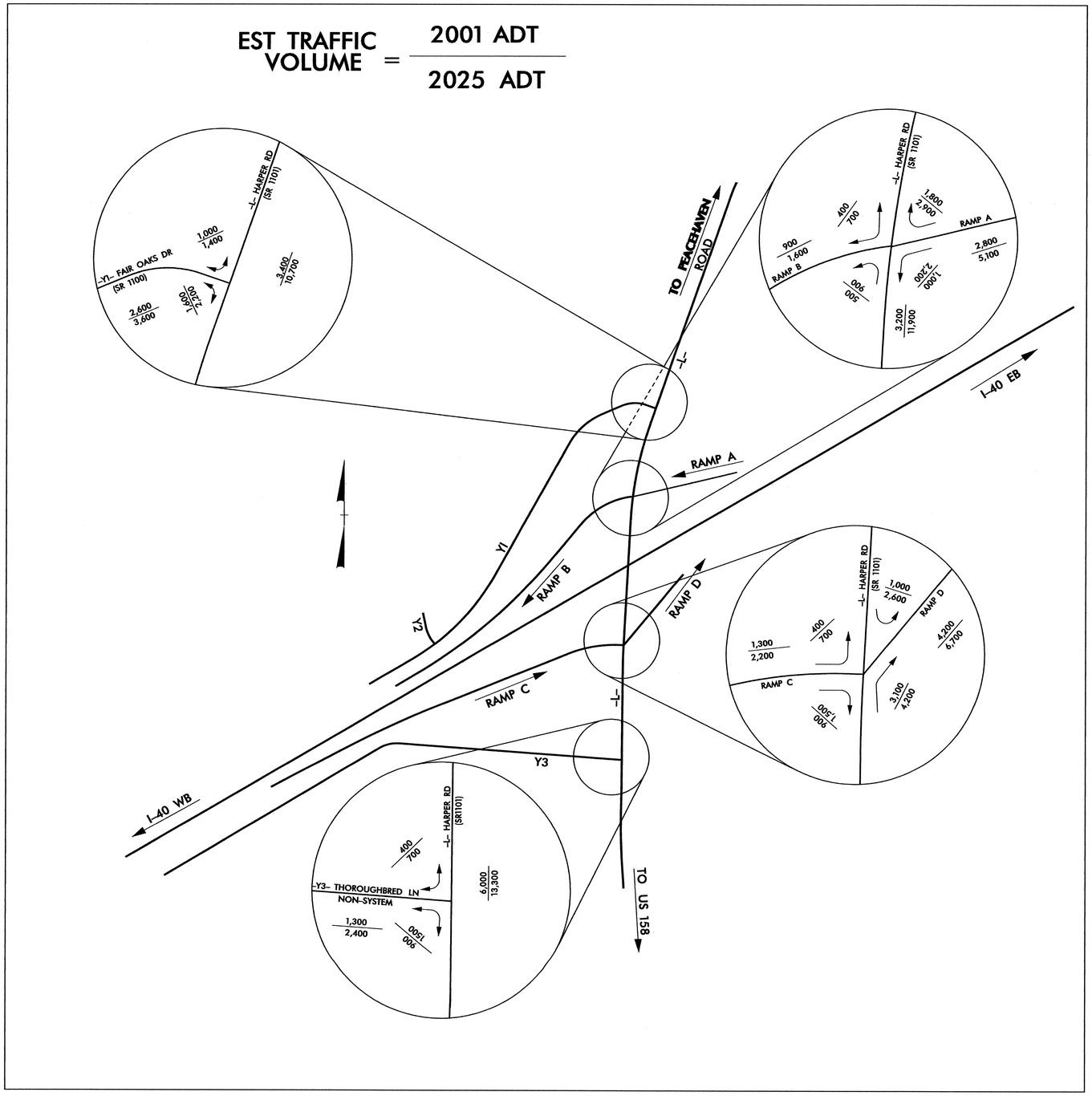

BRIDGE DETAIL

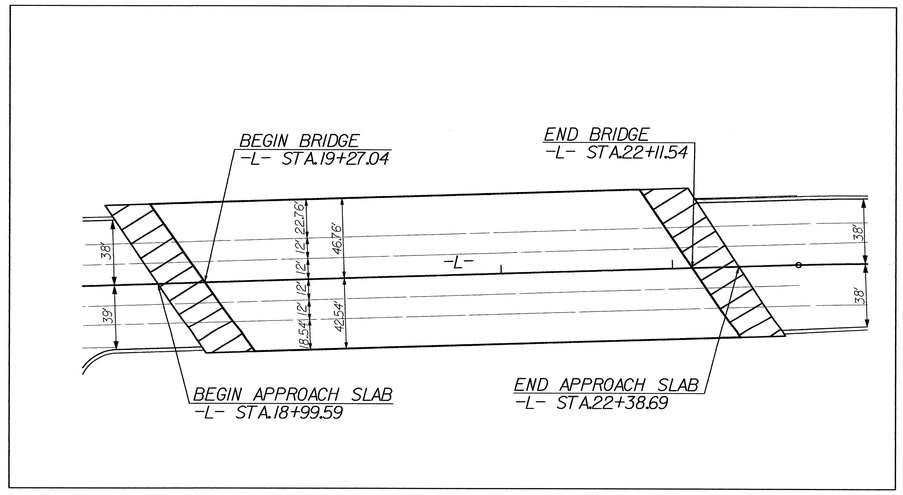

6/2/99

09-AUG-2004 14:01
R:\2102_sh_2c.dgn
pmcquade

PROJECT REFERENCE NO.	SHEET NO.
I-2102	2-D

STATE OF
NORTH CAROLINA
DEPT. OF TRANSPORTATION
DIVISION OF HIGHWAYS
RALEIGH, N.C.

ENGLISH DETAIL DRAWING FOR
GUIDE FOR GRADING SUBGRADE
INTERSTATE AND FREEWAY
(ROUND BOTTOM DITCH & MEDIAN DITCH)

SHEET 1 OF 1

225D01

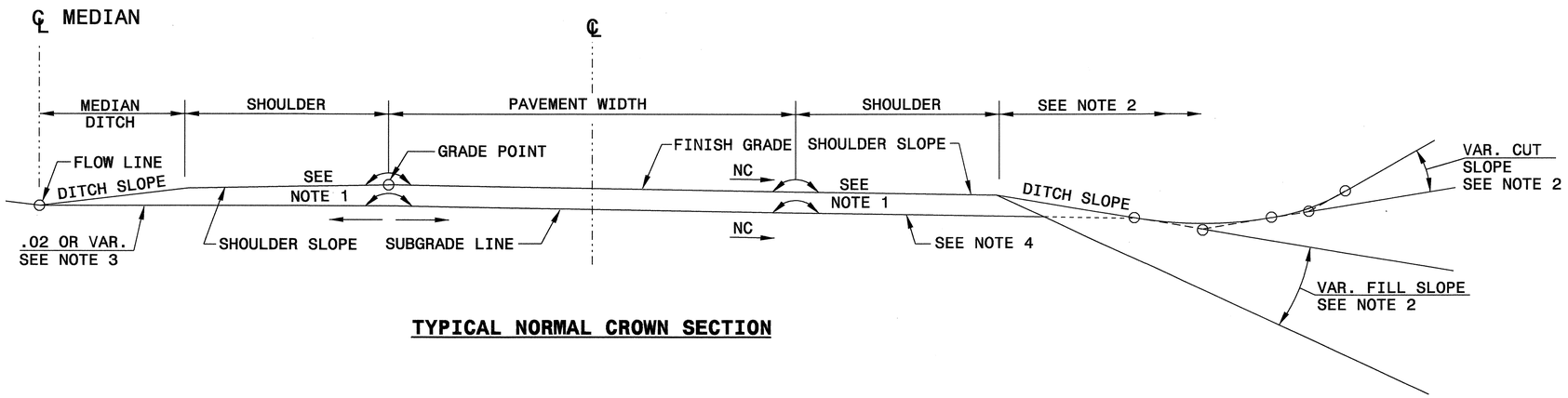

TYPICAL NORMAL CROWN SECTION

1. SEE TYPICAL SECTION FOR LATERAL LOCATION OF ROLLOVER.
2. SEE PLANS FOR METHOD OF CONSTRUCTING CUT AND FILL SLOPES.
3. SUBGRADE LINE WILL NOT UNDERCUT DITCH GRADE AT ANY POINT.
4. OUTSIDE SHOULDER SUBGRADES ARE THE SAME RATE OF SLOPE AS THE ADJACENT TRAVEL LANE SUBGRADES **UNLESS** CONSTRUCTED ON THE HIGH SIDE OF SUPERELEVATION OR CONSIST OF 10′ AND WIDER FULL DEPTH PAVEMENT (SEE STDS. 560.01 AND 560.02).

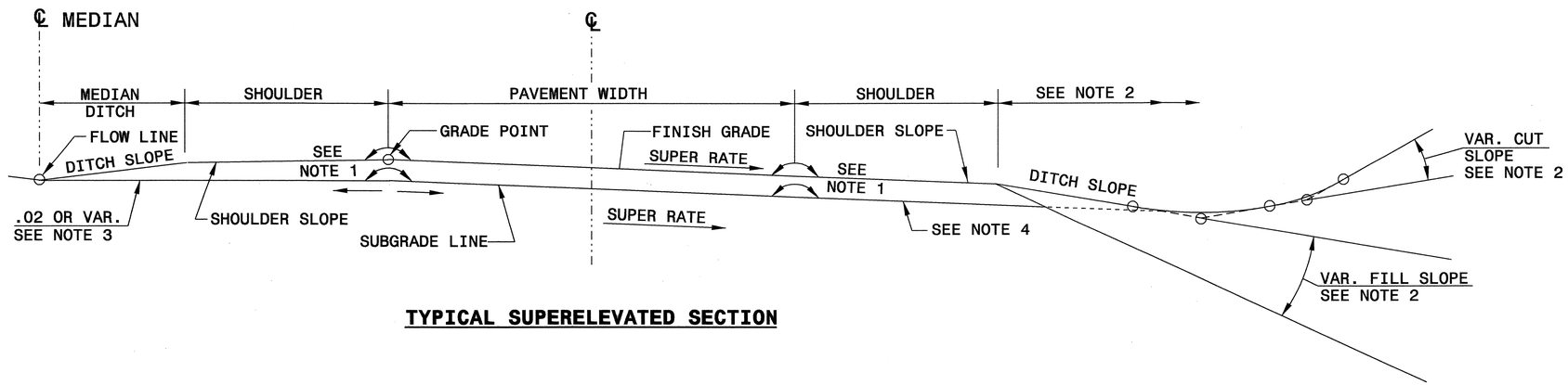

TYPICAL SUPERELEVATED SECTION

STATE OF
NORTH CAROLINA
DEPT. OF TRANSPORTATION
DIVISION OF HIGHWAYS
RALEIGH, N.C.

ENGLISH DETAIL DRAWING FOR
GUIDE FOR GRADING SUBGRADE
INTERSTATE AND FREEWAY
(ROUND BOTTOM DITCH & MEDIAN DITCH)

SHEET 1 OF 1

225D01

NORTH CAROLINA PROFESSIONAL SEAL 022966 ENGINEER JOEL S. HOWERTON
8/25/04

DESIGN SERVICES UNIT
STANDARDS AND SPECIAL DESIGN
Office 919-250-4128 FAX 919-250-4119

SEE PLATE FOR TITLE

ORIGINAL BY: 2002 STANDARDS DATE: 01-15-02
MODIFIED BY: E.E. WARD DATE: 04-07-03
CHECKED BY: [illegible] DATE: 4-03
FILE SPEC.: stds/02stdstodetails/english/225d01.dgn

10-APR-2003 09:19
W:\Special Details\workboard\stds\02' Stds to Special Details\english\22501\225d01.dgn
ericward AT DS186660

5/14/99

PROJECT REFERENCE NO.	SHEET NO.
I-2102	2-E

STATE OF NORTH CAROLINA DEPT. OF TRANSPORTATION DIVISION OF HIGHWAYS RALEIGH, N.C.

ENGLISH DETAIL DRAWING FOR
REINFORCED BRIDGE APPROACH FILLS

SHEET 1 OF 4
422D10

STATE OF NORTH CAROLINA DEPT. OF TRANSPORTATION DIVISION OF HIGHWAYS RALEIGH, N.C.

ENGLISH DETAIL DRAWING FOR
REINFORCED BRIDGE APPROACH FILLS
PRESTRESSED AND PLATE GIRDER BRIDGES

SHEET 2 OF 4
422D10

STATE OF NORTH CAROLINA DEPT. OF TRANSPORTATION DIVISION OF HIGHWAYS RALEIGH, N.C.

ENGLISH DETAIL DRAWING FOR
REINFORCED BRIDGE APPROACH FILLS

SHEET 1 OF 4
422D10

STATE OF NORTH CAROLINA DEPT. OF TRANSPORTATION DIVISION OF HIGHWAYS RALEIGH, N.C.

ENGLISH DETAIL DRAWING FOR
REINFORCED BRIDGE APPROACH FILLS
PRESTRESSED AND PLATE GIRDER BRIDGES

SHEET 2 OF 4
422D10

NORTH CAROLINA PROFESSIONAL SEAL 022966 ENGINEER JOEL S. HOWERTON
8/25/04

DESIGN SERVICES UNIT
STANDARDS AND SPECIAL DESIGN
Office 919-250-4128 FAX 919-250-4119

SEE PLATE FOR TITLE

ORIGINAL BY: 2002 STANDARDS DATE: 01-15-02
MODIFIED BY: E.E. WARD DATE: 04-02-04
CHECKED BY: DATE: 7/14/04
FILE SPEC.: stds/02stdstodetails/english/422d10.dgn

5/14/99

IE JUL-2004 DLG7
V:\Design Details\engineerd\stds\02' Stds to Special Details\english\422D10\0422d10.dgn
.erickard AT 05212260

PROJECT REFERENCE NO.	SHEET NO.
1-2102	2-F

STATE OF NORTH CAROLINA DEPT. OF TRANSPORTATION DIVISION OF HIGHWAYS RALEIGH, N.C.

ENGLISH DETAIL DRAWING FOR
REINFORCED BRIDGE APPROACH FILLS
CORED SLAB BRIDGES

SHEET 3 OF 4 **422D10**

Height of Backwall	Number of Fabric Layers
4'-6" - 5'-9"	3
5'-10" - 7'-2"	4
7'-3" - 8'-8"	5
8'-9" - 10'-1"	6
10'-2" - 11'-8"	7

Note: Cored Slab Structures Require 2 Fabric Layers.

Length of Bridge End Bent Inside Wingwalls
If Bridge Skew is Less Than or Equal to 90°: $\frac{\text{(Roadway Width + 7'-0")}}{\text{Sin (Bridge Skew Angle)}}$ = Dis. Between Wingwalls
If Bridge Skew is Greater Than 90°: $\frac{\text{(Roadway Width + 7'-0")}}{\text{Cos (Bridge Skew Angle - 90°)}}$ = Dis. Between Wingwalls

STATE OF NORTH CAROLINA DEPT. OF TRANSPORTATION DIVISION OF HIGHWAYS RALEIGH, N.C.

ENGLISH DETAIL DRAWING FOR
REINFORCED BRIDGE APPROACH FILLS
INSETS AND CHARTS

SHEET 4 OF 4 **422D10**

STATE OF NORTH CAROLINA DEPT. OF TRANSPORTATION DIVISION OF HIGHWAYS RALEIGH, N.C.

ENGLISH DETAIL DRAWING FOR
REINFORCED BRIDGE APPROACH FILLS
CORED SLAB BRIDGES

SHEET 3 OF 4 **422D10**

NORTH CAROLINA PROFESSIONAL SEAL 022966 ENGINEER JOEL S. HOWERTON
8/25/04

STATE OF NORTH CAROLINA DEPT. OF TRANSPORTATION DIVISION OF HIGHWAYS RALEIGH, N.C.

ENGLISH DETAIL DRAWING FOR
REINFORCED BRIDGE APPROACH FILLS
INSETS AND CHARTS

SHEET 4 OF 4 **422D10**

DESIGN SERVICES UNIT
STANDARDS AND SPECIAL DESIGN
Office 919-250-4128 FAX 919-250-4119

SEE PLATE FOR TITLE

ORIGINAL BY: 2002 STANDARDS DATE: 01-15-02
MODIFIED BY: E.E. WARD DATE: 03-26-03
CHECKED BY: DATE: 7/14/04
FILE SPEC.: stds/02stdstodetails/english/422d10.dgn

5/14/99

15-JUL-2004 11:27
W:\Special Details\ericsard\stds\02 Stds to Special Details\english\422d10\0422d10.dgn
ericsard AT 05:12268

PROJECT REFERENCE NO.	SHEET NO.
1-2102	2-G

5/14/99

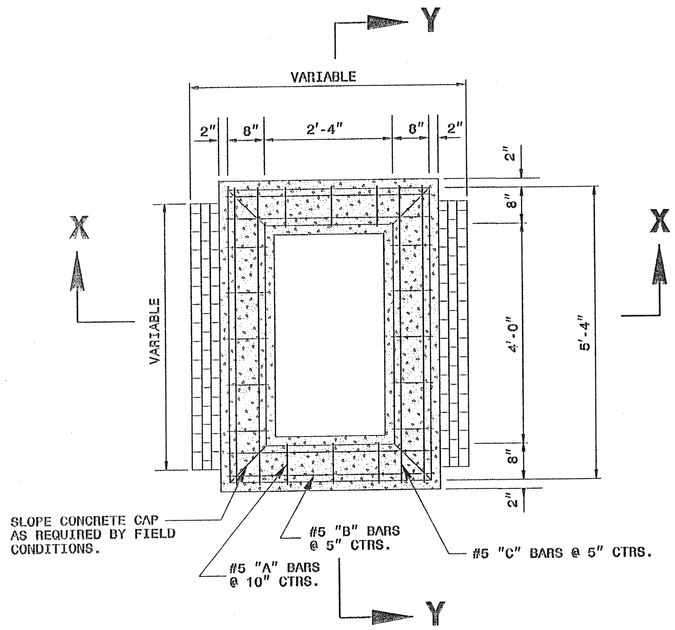

PLAN VIEW
APRON NOT SHOWN

NOTES:
- USE CLASS 'B' CONCRETE.
- DIMENSIONS MAY BE ADJUSTED TO SUIT FIELD CONDITIONS AS DIRECTED BY THE ENGINEER.

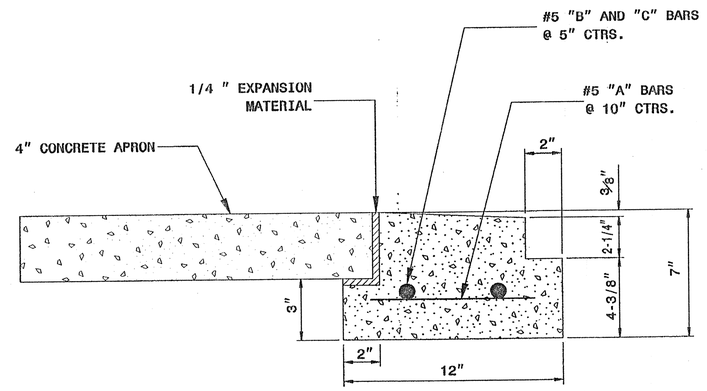

DETAIL "A"
CONCRETE CAP WITH APRON

BILL OF MATERIAL

BAR	NO.	SIZE	LENGTH	WEIGHT
A	16	5	9"	13
B	4	5	3'-5"	14
C	4	5	5'-1"	21
TOTAL REINF. STEEL (lbs.)				48
BRICK MASONRY (per ft. ht.) (cu. yds.)				0.38
CLASS "B" CONC. (cu. yds.)				0.23

FRAME AND GRATES	STD. NO.
PREFERRED:	840.22
	840.24
ACCEPTABLE:	840.20
	840.29
	840.33

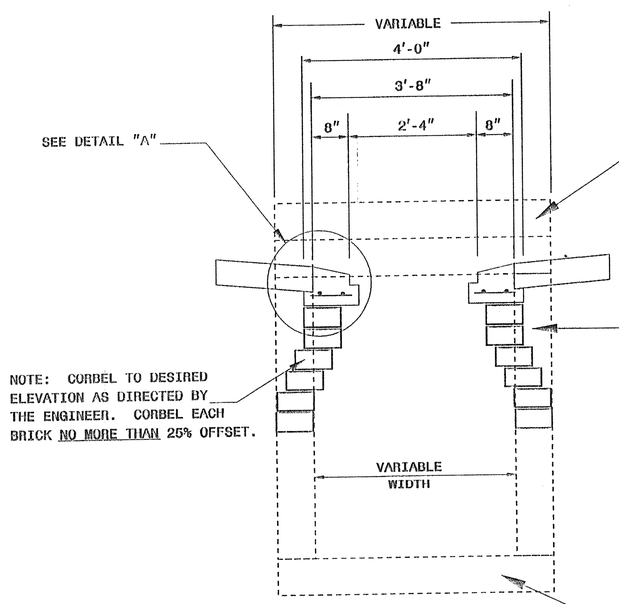

SECTION X-X

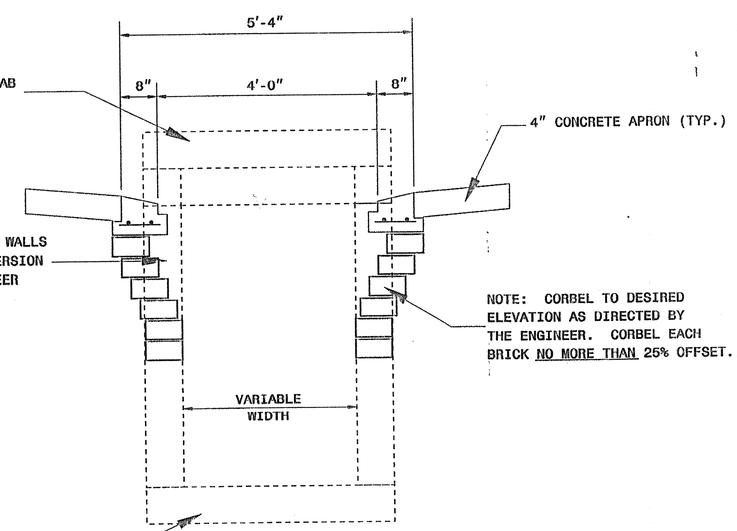

SECTION Y-Y

NORTH CAROLINA PROFESSIONAL SEAL 022966 ENGINEER JOEL S. HOMEYER
8/25/04

DESIGN SERVICES UNIT
STANDARDS AND SPECIAL DESIGN
Office 919-250-4128 FAX 919-250-4119

CONVERT EXISTING
OPEN THROAT CATCH BASIN
TO MEDIAN DROP INLET

ORIGINAL BY: L.M. LEWIS DATE: 3/97
MODIFIED BY: E.F. WARD DATE: 1/00
CHECKED BY: [illegible] DATE: 2/00
FILE SPEC.: ds172:\usr\details\stand\chto2gi.dgn

PROJECT REFERENCE NO.	SHEET NO.
1-2102	2-H

STATE OF
NORTH CAROLINA
DEPT. OF TRANSPORTATION
DIVISION OF HIGHWAYS
RALEIGH, N.C.

ENGLISH DETAIL DRAWING FOR

DROP INLET INSTALLATION IN EXPRESSWAY GUTTER

SHEET 1 OF 1

846D02

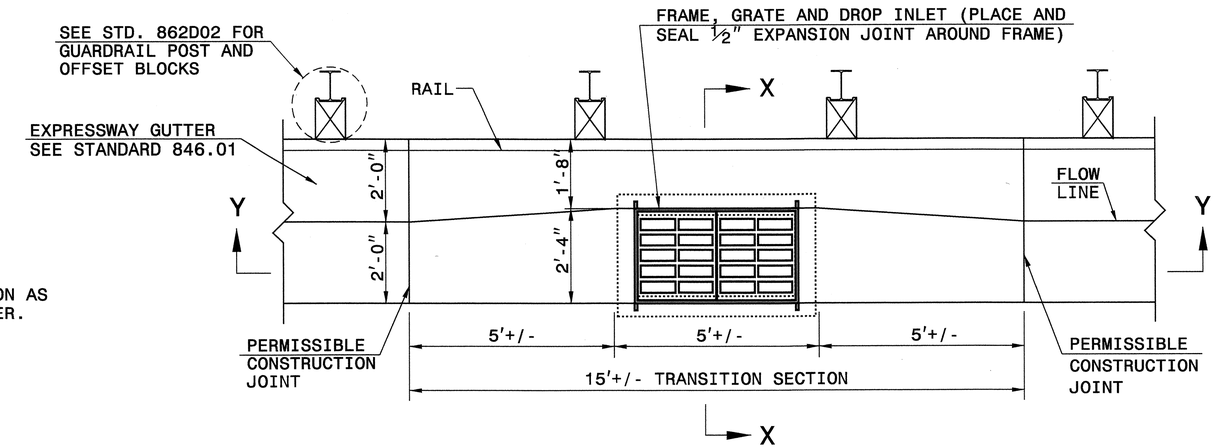

PLAN

GENERAL NOTES:
-PAY FOR TRANSITION SECTION AS CONCRETE EXPRESSWAY GUTTER.
-GUARDRAIL OPTIONAL

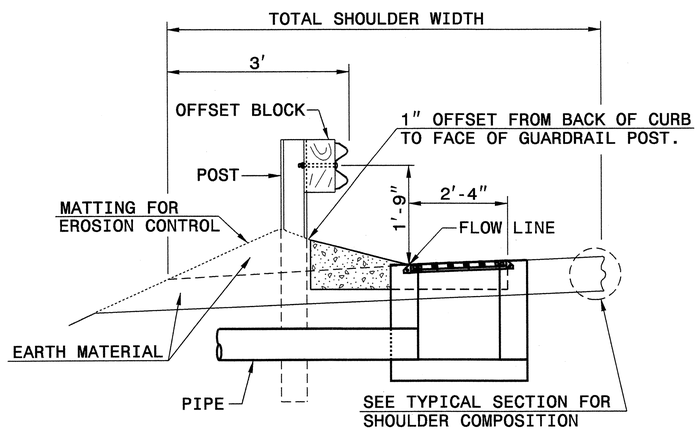

SECTION X-X

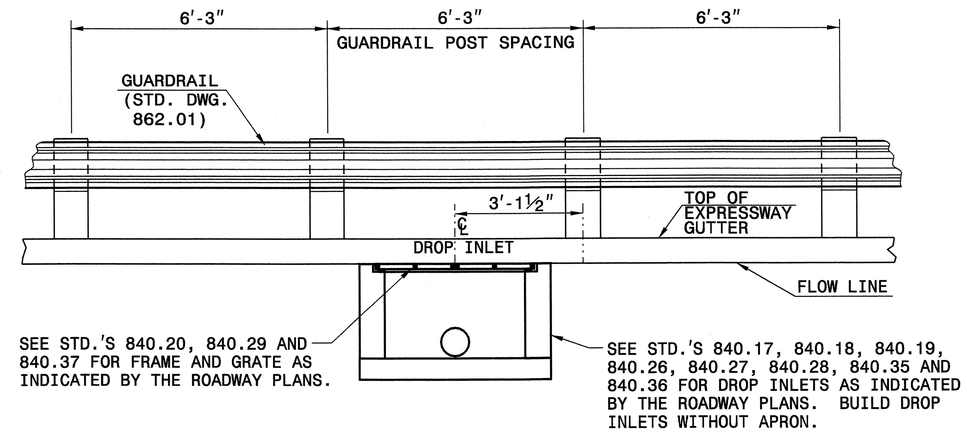

SECTION Y-Y

DROP INLET INSTALLATION IN EXPRESSWAY GUTTER

STATE OF
NORTH CAROLINA
DEPT. OF TRANSPORTATION
DIVISION OF HIGHWAYS
RALEIGH, N.C.

ENGLISH DETAIL DRAWING FOR

DROP INLET INSTALLATION IN EXPRESSWAY GUTTER

SHEET 1 OF 1

846D02

NORTH CAROLINA PROFESSIONAL SEAL 022966 ENGINEER JOHN S. HOWERTON
8/25/04

DESIGN SERVICES UNIT
STANDARDS AND SPECIAL DESIGN
Office 919-250-4128 FAX 919-250-4119

SEE PLATE FOR TITLE

ORIGINAL BY: 2002 STANDARDS DATE: 01-15-02
MODIFIED BY: E.E. WARD DATE: 04-07-04
CHECKED BY: C.B. Young DATE: 4-12-04
FILE SPEC.: stds/02stdst0details/english/846d02.dgn

07-APR-2004 16:57
W:\Special Details\ericward\stds\02' Stds to Special Details\english\846D02\0846d02.dgn
ericward AT DS212260

5/14/99

PROJECT REFERENCE NO.	SHEET NO.
1-2102	2-1

GENERAL NOTES:

USE CLASS "B" CONCRETE THROUGHOUT.

PROVIDE ALL DROP INLETS OVER 3'-6" IN DEPTH WITH STEPS 12" ON CENTER. USE STEPS WHICH COMPLY WITH STD. DRAWING 840.66.

OPTIONAL CONSTRUCTION - MONOLITHIC POUR, 2" KEYWAY, OR #4 BAR DOWELS AT 12" CENTERS AS DIRECTED BY THE ENGINEER.

USE FORMS FOR THE CONSTRUCTION OF THE BOTTOM SLAB.

IF REINFORCED CONCRETE PIPE IS SET IN BOTTOM SLAB OF BOX, ADD TO SLAB AS SHOWN ON STD. NO. 840.00.

#4 BAR DOWELS "B" AT 12" CENTERS.

MAX. DEPTH OF THIS STRUCTURE FROM TOP OF BOTTOM SLAB TO TOP ELEVATION IS 12 FEET.

FOR LOCATIONS OF DROP INLET, SEE BRIDGE APPROACH SLABS IN THE STRUCTURE PLANS.

CONSTRUCT WITH PIPE CROWNS MATCHING.

DRAWING NOT TO SCALE.

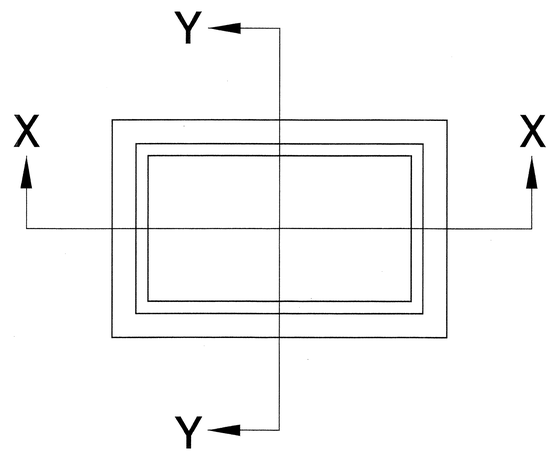

PLAN

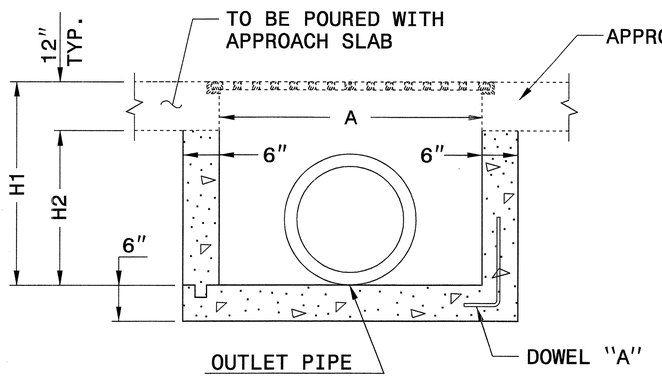

SECTION X-X

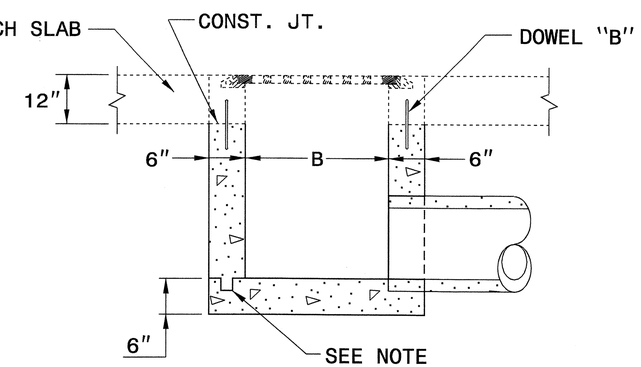

SECTION Y-Y

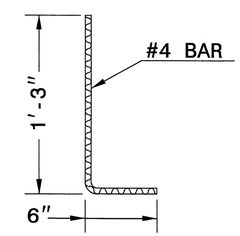

DOWEL "A"

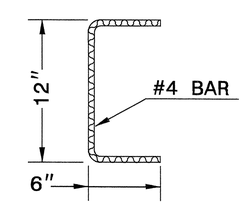

DOWEL "B"

MINIMUM DIMENSIONS AND QUANTITIES FOR CONCRETE DROP INLET

PIPE	SPAN	WIDTH	HEIGHT	HEIGHT	CUBIC YARDS OF CONCRETE IN BOX				DEDUCTIONS FOR ONE PIPE	
D	A	B	H1	H2	BOTTOM SLAB	H PER FT. HT.	H MIN. TOTAL	TOTAL	C.S.	R.C.
12"	3'-8"	2'-0"	2'-6"	1'-6"	0.259	0.247	0.597	0.856	0.020	0.032
15"	3'-8"	2'-0"	2'-9"	1'-9"	0.259	0.247	0.659	0.918	0.023	0.036
18"	3'-8"	2'-0"	3'-0"	2'-0"	0.259	0.247	0.720	0.979	0.033	0.049
24"	3'-8"	2'-0"	3'-6"	2'-6"	0.259	0.247	0.865	1.124	0.059	0.085

NORTH CAROLINA PROFESSIONAL SEAL 022966 ENGINEER JOEL S. HOWERTON
8/25/04

DESIGN SERVICES UNIT
STANDARDS AND SPECIAL DESIGN
Office 919-250-4128 FAX 919-250-4119

DETAIL FOR CONCRETE BRIDGE APPROACH DROP INLET

ORIGINAL BY: T.Spell DATE: 04-07-04
MODIFIED BY: DATE:
CHECKED BY: C.B.Ellis DATE: 4-13-04
FILE SPEC.: stds/02stdstddetails/english/840d13.dgn

5/11/99
12-APR-2004 15:24
\\DST\001\Contracts\Special Details\ericward\stds\02\Stds to Special Details\english\840d13\840d13.dgn
tspell A1 D5:0.9955

STATE OF NORTH CAROLINA
DEPT. OF TRANSPORTATION
DIVISION OF HIGHWAYS
RALEIGH, N.C.

ENGLISH DETAIL DRAWING FOR
DRIVEWAY TURNOUT
DROP CURB TYPE

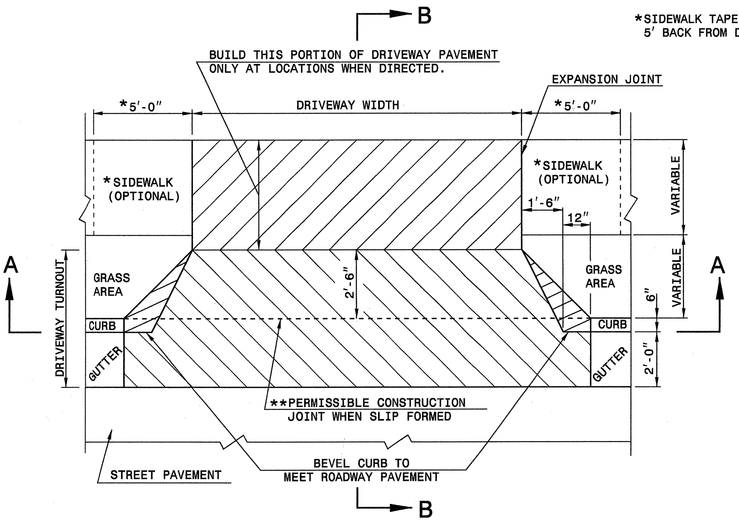

PLAN
DETAIL OF DRIVEWAY

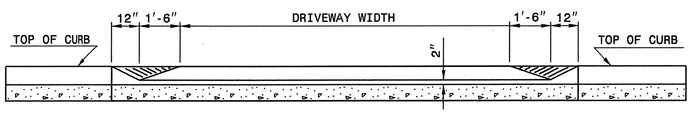

SECTION A-A

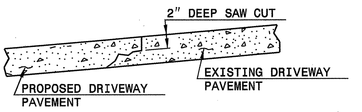

METHOD OF TIE IN

WHEN EXISTING DRIVEWAY PAVEMENT IS CONCRETE, SAW CUT 2" DEEP JOINT AT THE POINT OF TIE-IN. SAW JOINT PERPENDICULAR TO EDGE OF EXISTING DRIVEWAY PAVEMENT.

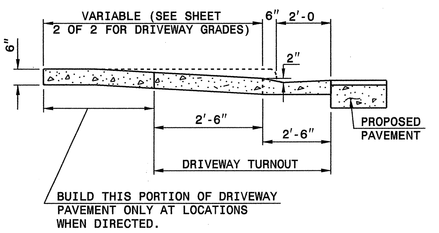

SECTION B-B

GENERAL NOTES:

**NO CONSTRUCTION JOINT WILL BE PERMITTED IF FORMS ARE USED TO CAST DRIVEWAY. SLIP FORMING OF CURB AND GUTTER PERMITS THE USE OF CONSTRUCTION JOINT.

SHEET 1 OF 2
848D03

STATE OF NORTH CAROLINA
DEPT. OF TRANSPORTATION
DIVISION OF HIGHWAYS
RALEIGH, N.C.

ENGLISH DETAIL DRAWING FOR
DRIVEWAY TURNOUT
DRIVEWAY GRADES

DESIRABLE DRIVEWAY GRADES

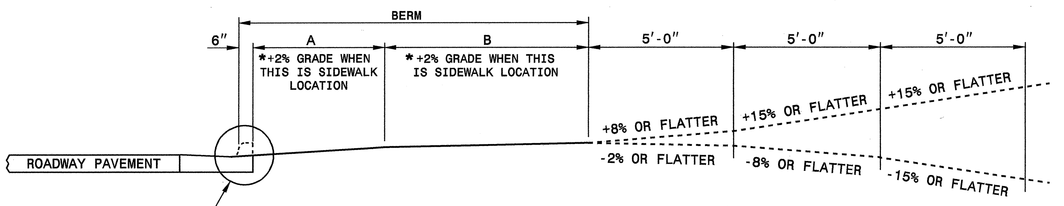

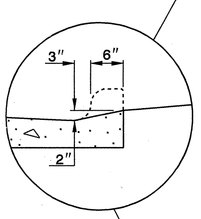

*SIDEWALK LOCATION (DO NOT PLACE SIDEWALK ON BERMS LESS THAN 6' WIDE.)

DESIRABLE OR MAXIMUM DRIVEWAY GRADES				
BERM WIDTH	A		B	
	DIST.	GRADE	DIST.	GRADE
8' OR LESS	5'-0"	+2%*	2'-6"	+5%
8' OR LESS	2'-0"	+6%	5'-6"	+2%*
10'	4'-0"	+4%	5'-6"	+2%*
12' & OVER	4'-6"	+4%	7'-0"	+2%*

MAXIMUM DRIVEWAY GRADES

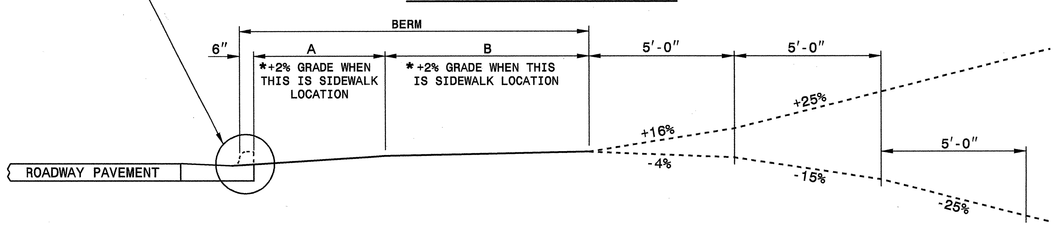

SHEET 2 OF 2
848D03

STATE OF NORTH CAROLINA
DEPT. OF TRANSPORTATION
DIVISION OF HIGHWAYS
RALEIGH, N.C.

ENGLISH DETAIL DRAWING FOR
DRIVEWAY TURNOUT
DRIVEWAY GRADES

SHEET 2 OF 2
848D03

DESIGN SERVICES UNIT
STANDARDS AND SPECIAL DESIGN
Office 919-250-4128 FAX 919-250-4119

SEE PLATE FOR TITLE

ORIGINAL BY: 2002 STD. 848.03 DATE: 03-27-03
MODIFIED BY: E.E. WARD
CHECKED BY: DATE:
FILE SPEC.: usr/stds/02tdetail/english/84803/848d03.dgn

NORTH CAROLINA PROFESSIONAL SEAL 02966 ENGINEER
9/25/02

PROJECT REFERENCE NO. 1-2102
SHEET NO. 2-J

STATE OF NORTH CAROLINA
DEPT. OF TRANSPORTATION
DIVISION OF HIGHWAYS
RALEIGH, N.C.

ENGLISH DETAIL DRAWING FOR
WHEELCHAIR RAMP
CURB CUT

SHEET 1 OF 4
848D05

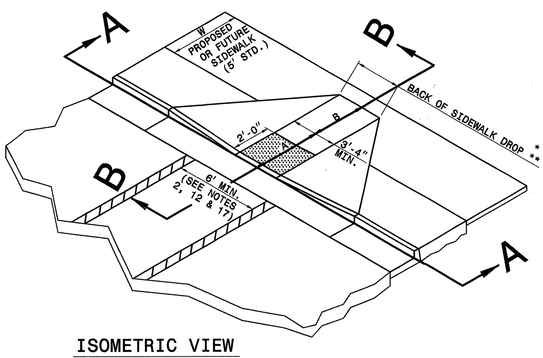

ISOMETRIC VIEW

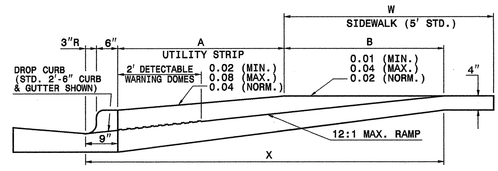

SECTION B-B

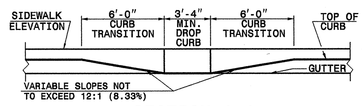

SECTION A-A

ROADWAY PLAN SYMBOL	ROADWAY PLAN SYMBOL
CCFR	WCR
CURB CUT FOR FUTURE RAMP	FOR PROPOSED WHEELCHAIR RAMP

NOTES:
1. DETECTABLE WARNING DOMES SHALL COVER 2'-0" LENGTH AND FULL WIDTH OF THE RAMP FLOOR AS SHOWN ON THE DETAILS.
2. THE RAMP MAY BE YELLOW IN COLOR OR ANY COLOR WITH A 70% CONTRAST RATIO.

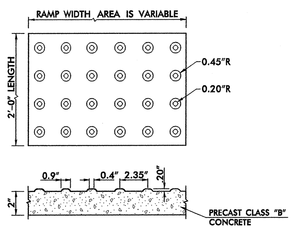

DETECTABLE WARNING DOMES

W	A	W+A+9"	X	B
5'	0.0'	5.8'	5.8'	5.0'*
6'	0.0'	6.8'	6.8'	6.0'**
7'	0.0'	7.8'	7.3'	6.5'**
8'	0.0'	8.8'	7.3'	6.5'**
5'	2.0'	7.8'	7.8'	5.0'
5'	2.5'	8.3'	8.1'	4.8'
5'	3.0'	8.8'	8.3'	4.4'
5'	3.5'	9.3'	8.4'	4.1'
5'	4.0'	9.8'	8.6'	3.8'
5'	4.5'	10.3'	8.7'	3.4'
5'	5.0'	10.8'	8.9'	3.1'

B = X-(A+9")
B = DISTANCE FROM FRONT EDGE OF SIDEWALK TO BACK POINT OF 12:1 (8.33%) SLOPE.
* BACK OF SIDEWALK DROP REQUIRED FOR ALL SIDEWALK SLOPES.
** BACK OF SIDEWALK DROP REQUIRED FOR SIDEWALK SLOPES 0.04.

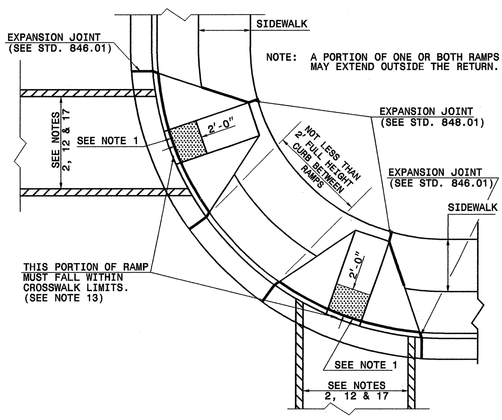

PLAN VIEW
DUAL RAMPS
ANY RADII
(40" MIN. FLOOR WIDTH)

STATE OF NORTH CAROLINA
DEPT. OF TRANSPORTATION
DIVISION OF HIGHWAYS
RALEIGH, N.C.

ENGLISH DETAIL DRAWING FOR
WHEELCHAIR RAMP
CURB CUT

SHEET 1 OF 4
848D05

STATE OF NORTH CAROLINA
DEPT. OF TRANSPORTATION
DIVISION OF HIGHWAYS
RALEIGH, N.C.

ENGLISH DETAIL DRAWING FOR
RETROFITTING DETECTABLE WARNING DOMES ONTO EXISTING WHEELCHAIR RAMP
CURB CUT

SHEET 2 OF 4
848D05

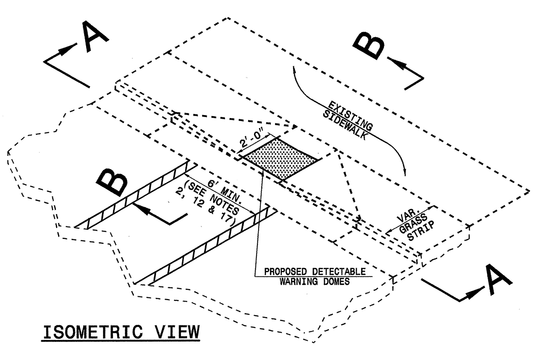

ISOMETRIC VIEW

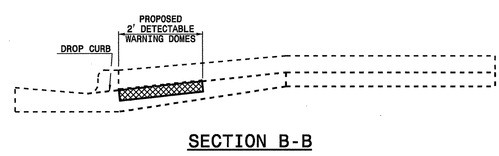

SECTION B-B

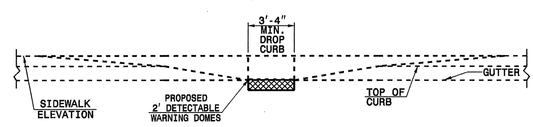

SECTION A-A

1. DETECTABLE WARNING DOMES SHALL COVER 2'-0" LENGTH AND FULL WIDTH OF THE RAMP FLOOR AS SHOWN ON THE DETAILS.
2. THE RAMP MAY BE YELLOW IN COLOR OR ANY COLOR WITH A 70% CONTRAST RATIO.

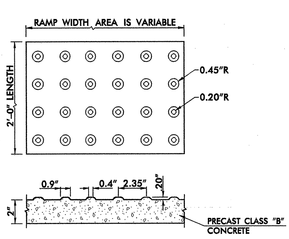

DETECTABLE WARNING DOMES

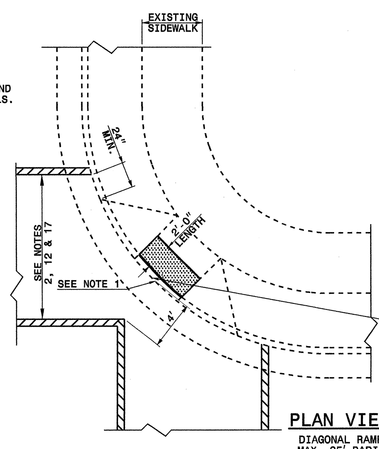

PLAN VIEW
DIAGONAL RAMP
MAX. 25' RADII
(60" MIN. FLOOR WIDTH)

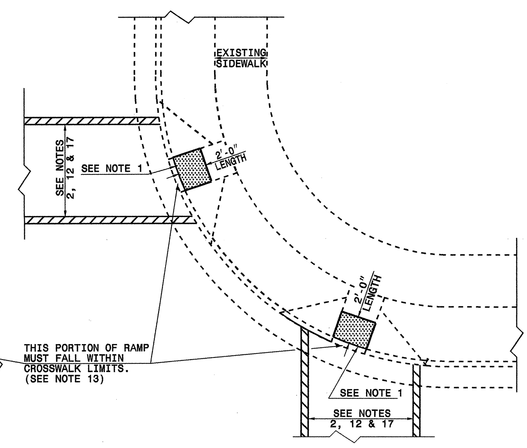

PLAN VIEW
DUAL RAMPS
ANY RADII
(40" MIN. FLOOR WIDTH)

STATE OF NORTH CAROLINA
DEPT. OF TRANSPORTATION
DIVISION OF HIGHWAYS
RALEIGH, N.C.

ENGLISH DETAIL DRAWING FOR
RETROFITTING DETECTABLE WARNING DOMES ONTO EXISTING WHEELCHAIR RAMP
CURB CUT

SHEET 2 OF 4
848D05

DESIGN SERVICES UNIT
STANDARDS AND SPECIAL DESIGN
Office 919-250-4128 FAX 919-250-4119

SEE PLATE FOR TITLE

ORIGINAL BY: 2002 STD. 848.05 DATE:
MODIFIED BY: E.E. WARD DATE: 06-18-03
CHECKED BY: DATE:
FILE SPEC.: /usr1sub/02tcdef01/english/848d05/848d05.dgn

NORTH CAROLINA PROFESSIONAL SEAL 02986 ENGINEER JOEL E. HOCHSTETLER

PROJECT REFERENCE NO. 1-2102
SHEET NO. 2-K

STATE OF
NORTH CAROLINA
DEPT. OF TRANSPORTATION
DIVISION OF HIGHWAYS
RALEIGH, N.C.

ENGLISH DETAIL DRAWING FOR
WHEELCHAIR RAMP
CURB CUT

SHEET 3 OF 4
848D05

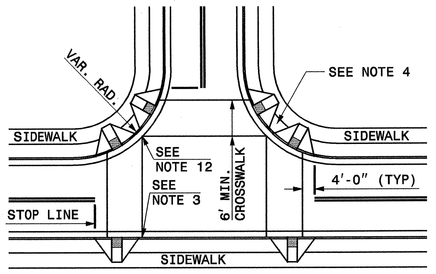

DETAIL SHOWING TYPICAL LOCATION OF WHEELCHAIR RAMPS, PEDESTRIAN CROSSWALKS AND STOP LINES FOR TEE INTERSECTIONS

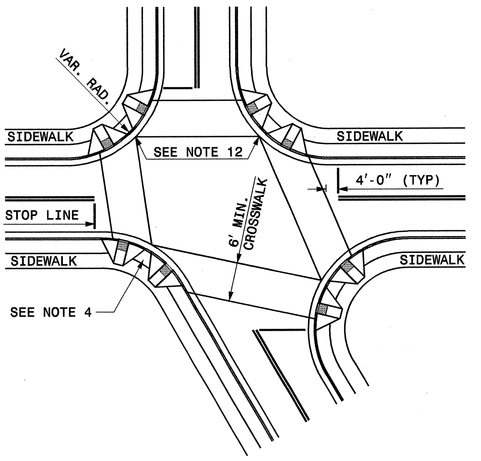

DETAIL SHOWING TYPICAL LOCATION OF WHEELCHAIR RAMPS, PEDESTRIAN CROSSWALKS AND STOP LINES

PROPOSED WHEELCHAIR RAMP
PROPOSED OR FUTURE SIDEWALK

ALLOWABLE LOCATIONS

DUAL RAMP RADII.....ANY

STATE OF
NORTH CAROLINA
DEPT. OF TRANSPORTATION
DIVISION OF HIGHWAYS
RALEIGH, N.C.

ENGLISH DETAIL DRAWING FOR
WHEELCHAIR RAMP
CURB CUT

SHEET 3 OF 4
848D05

STATE OF
NORTH CAROLINA
DEPT. OF TRANSPORTATION
DIVISION OF HIGHWAYS
RALEIGH, N.C.

ENGLISH DETAIL DRAWING FOR
WHEELCHAIR RAMP
CURB CUT

SHEET 4 OF 4
848D05

NOTES:

1. CONSTRUCT THE WALKING SURFACE WITH SLIP RESISTANTANCE AND A 70% CONTRASTING COLOR TO THE SIDEWALK.
2. CROSSWALK WIDTHS AND CONFIGURATION VARY BUT MUST CONFORM TO TRAFFIC DESIGN STANDARDS.
3. NORTH CAROLINA GENERAL STATUTE 136-44.14 REQUIRES THAT ALL STREET CURBS BEING CONSTRUCTED OR RECONSTRUCTED FOR MAINTENANCE PROCEDURES, TRAFFIC OPERATIONS, REPAIRS, CORRECTION OF UTILTIES OR ALTERED FOR ANY REASON AFTER SEPTEMBER 1, 1973 SHALL PROVIDE WHEELCHAIR RAMPS FOR THE PHYSICALLY DISABLED AT ALL INTERSECTIONS WHERE BOTH CURB AND GUTTER AND SIDEWALKS ARE PROVIDED AND AT OTHER POINTS OF PEDESTRIAN FLOW.

   IN ADDITION, SECTION 228 OF THE 1973 FEDERAL AID HIGHWAY SAFETY ACT REQUIRES PROVISION OF CURB RAMPS ON ANY CURB CONSTRUCTION AFTER JULY 1,1976 WHETHER A SIDEWALK IS PROPOSED INITIALLY OR IS PLANNED FOR A FUTURE DATE.

   THE AMERICANS WITH DISABILITIES ACT (ADA) OF 1990 EXTENDS TO INDIVIDUALS WITH DISABILITIES. COMPREHENSIVE CIVIL RIGHTS PROTECTIONS SIMILIAR TO THOSE PROVIDED TO PERSONS ON THE BASIS OF RACE, SEX, NATIONAL ORIGIN AND RELIGION UNDER THE CIVIL RIGHTS ACT OF 1964. THESE CURB RAMPS HAVE BEEN DESIGNED TO COMPLY WITH THE CURRENT ADA STANDARDS.
4. PROVIDE WHEELCHAIR RAMPS AT LOCATIONS AS SHOWN ON THE PLANS OR AS DIRECTED BY THE ENGINEER. LOCATE WHEELCHAIR RAMPS AS DIRECTED BY THE ENGINEER WHERE EXISTING LIGHT POLES, FIRE HYDRANTS, DROP INLETS, ETC. AFFECT PLACEMENT. WHERE TWO RAMPS ARE INSTALLED PLACE NOT LESS THAN 2 FEET OF FULL HEIGHT CURB BETWEEN THE RAMPS. PLACE DUAL RAMPS AS NEAR PERPENDICULAR TO THE TRAVEL LANE BEING CROSSED AS POSSIBLE.
5. PAY FOR ALL VARIABLE DEPTH CONCRETE USED FOR CONSTRUCTION OF WHEELCHAIR RAMPS AS CONCRETE WHEELCHAIR RAMPS. (SQ. YDS.)
6. PAY FOR ALL DEPRESSED CURBS AT WHEELCHAIR RAMPS AS THE TYPE CURB AND GUTTER USED ADJACENT TO DEPRESSED CURB. (LN. FT.)
7. SUCH PRICES AND PAYMENTS IS CONSIDERED FULL COMPENSATION FOR ALL MATERIALS, LABOR, EQUIPMENT, TOOLS AND INCIDENTALS NECESSARY TO SATISFACTORILY COMPLETE THE WORK.
8. DO NOT EXCEED 0.08 (12:1) SLOPE ON THE WHEELCHAIR RAMP IN RELATIONSHIP TO THE GRADE OF THE STREET.
9. CONSTRUCT WHEELCHAIR RAMPS 40" (3'-4") OR GREATER FOR DUAL RAMPS.
10. USE CLASS "B" CONCRETE WITH A SIDEWALK FINISH IN ORDER TO OBTAIN A ROUGH NON-SKID TYPE SURFACE.
11. PLACE A ½" EXPANSION JOINT WHERE THE CONCRETE WHEELCHAIR RAMP JOINS THE CURB AND AS SHOWN ON STD. DWG. 848.01.
12. PLACE THE INSIDE PEDESTRIAN CROSSWALK LINES NO CLOSER IN THE INTERSECTION BY BISECTING THE INTERSECTION RADII, WITH ALLOWANCE OF A 4' CLEAR ZONE IN THE VEHICULAR TRAVELWAY WHEN ONE RAMP IS INSTALLED. (SEE NOTE 17)
13. COORDINATE THE CURB CUT AND THE PEDESTRIAN CROSSWALK LINES SO THE FLOOR OF THE WHEELCHAIR RAMP WILL FALL WITHIN THE PEDESTRIAN CROSSWALK LINES. PLACE DIAGONAL RAMPS WITH FLARED SIDES SO 24" OF FULL HEIGHT CURB FALLS WITHIN THE CROSSWALK MARKINGS ON EACH SIDE OF THE FLARES.
14. CONSTRUCT THE PEDESTRIAN CROSSWALK A MINIMUM OF 6 FEET. A CROSSWALK WIDTH OF 10 FEET OR GREATER IS DESIRABLE.
15. USE STOP LINES, NORMALLY PERPENDICULAR TO THE LANE LINES, WHERE IT IS IMPORTANT TO INDICATE THE POINT BEHIND WHICH VEHICLES ARE REQUIRED TO STOP IN COMPLIANCE WITH A TRAFFIC SIGNAL, STOP SIGN OR OTHER LEGAL REQUIREMENT. AN UNUSUAL APPROACH SKEW MAY REQUIRE THE PLACEMENT OF THE STOP LINE TO BE PARALLEL TO THE INTERSECTING ROADWAY.
16. TERMINATE PARKING A MINIMUM OF 20 FEET BACK OF PEDESTRIAN CROSSWALK.
17. PLACE ALL PAVEMENT MARKINGS IN ACCORDANCE WITH THE LATEST EDITION OF THE MANUAL OF UNIFORM TRAFFIC CONTROL DEVICES (MUTCD) PUBLISHED BY THE FEDERAL HIGHWAY ADMINISTRATION AND THE NORTH CAROLINA SUPPLEMENT TO THE MUTCD.

STATE OF
NORTH CAROLINA
DEPT. OF TRANSPORTATION
DIVISION OF HIGHWAYS
RALEIGH, N.C.

ENGLISH DETAIL DRAWING FOR
WHEELCHAIR RAMP
CURB CUT

SHEET 4 OF 4
848D05

DESIGN SERVICES UNIT
STANDARDS AND SPECIAL DESIGN
Office 919-250-4128 FAX 919-250-4119

SEE PLATE FOR TITLE

ORIGINAL BY: 2002 STD. 848.05 DATE:
MODIFIED BY: E.E. WARD DATE: 06-18-03
CHECKED BY: DATE:
FILE SPEC.: /usr1/std/02stds/ATrafficEl/848D05/848d05.dgn

NORTH CAROLINA PROFESSIONAL SEAL 02196 ENGINEER JOHN B. HOWARTON
8/5/04

PROJECT REFERENCE NO.	SHEET NO.
1-2102	2-L

PROJECT REFERENCE NO.	SHEET NO.
I-2102	2-M

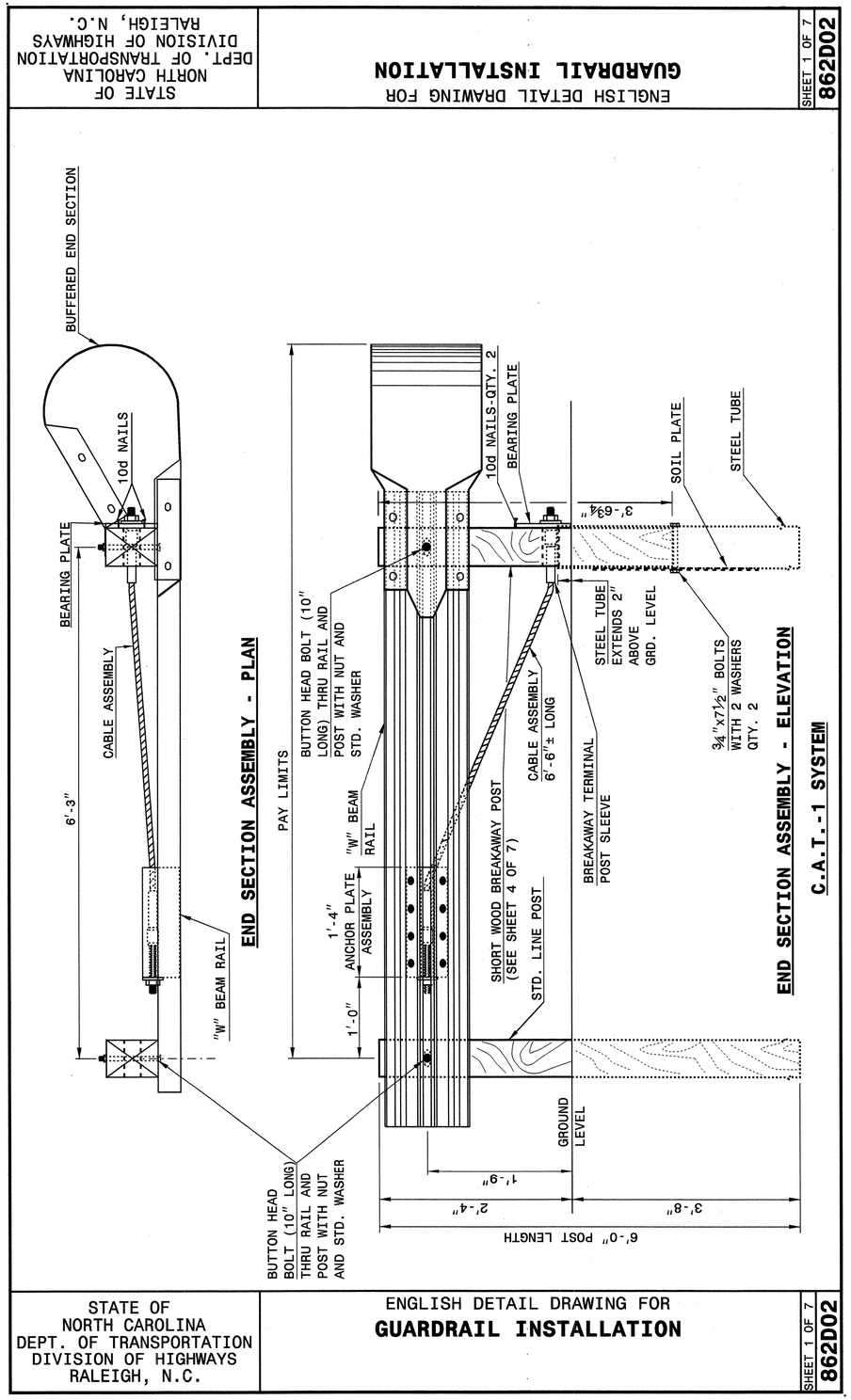

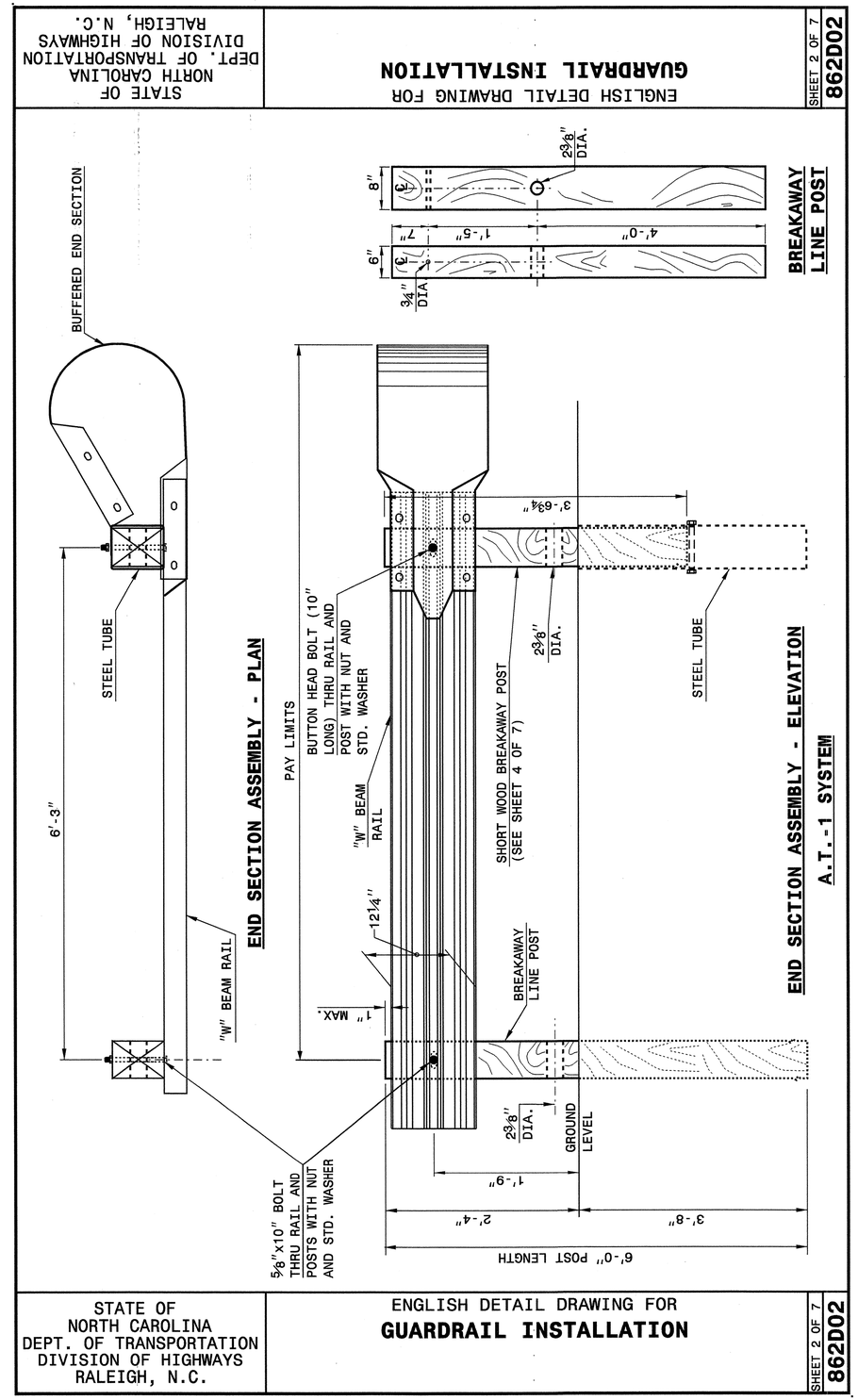

NORTH CAROLINA PROFESSIONAL SEAL 022966 ENGINEER JOHN S. HOWERTON
8/29/04

DESIGN SERVICES UNIT
STANDARDS AND SPECIAL DESIGN
Office 919-250-4128 FAX 919-250-4119

SEE PLATE FOR TITLE

ORIGINAL BY: 2002 STD.862.02 DATE:
MODIFIED BY: E.E. WARD DATE: 02-09-03
CHECKED BY: DATE: 4-29-04
FILE SPEC.: /usr/stds/02todetail/english/86202/862d02.dgn

29-APR-2004 11:01
W:\Special Details\ericward\stds\02' Stds to Special Details\english\86202\0862d02.dgn
ericward AT DS212260

5/14/99

PROJECT REFERENCE NO.	SHEET NO.
1-2102	2-N

STATE OF NORTH CAROLINA DEPT. OF TRANSPORTATION DIVISION OF HIGHWAYS RALEIGH, N.C.

ENGLISH DETAIL DRAWING FOR
GUARDRAIL INSTALLATION

SHEET 3 OF 7
862D02

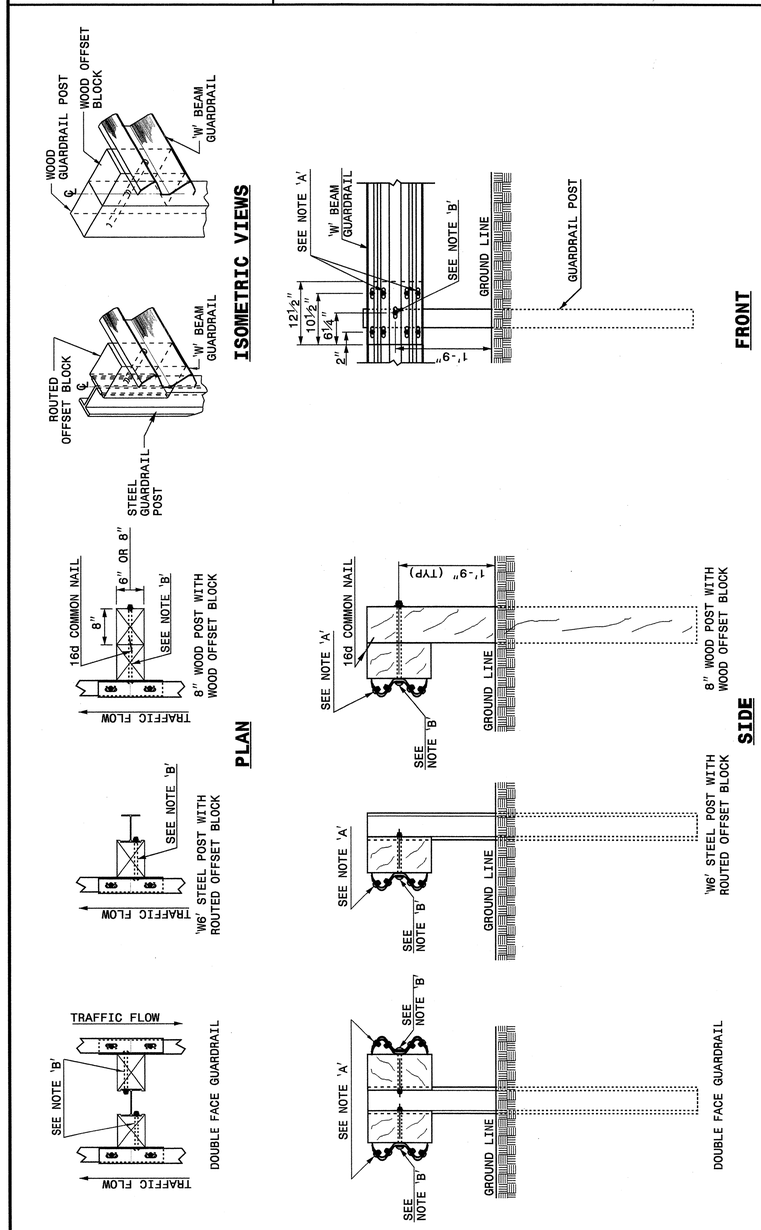

NOTES:
A - 5/8" DIA. BUTTON HEAD SPLICE BOLT 1¼" LONG (8 REQ. PER SPLICE JOINT).
B - 5/8" DIA. BUTTON HEAD BOLT 7½"/9" LONG WITH NUT FOR BOLTING 6"/8" ROUTED OFFSET BLOCK TO STEEL POSTS OR 5/8" DIA. BUTTON HEAD BOLT 18" LONG WITH STD. WASHER UNDER NUT FOR BOLTING TO WOOD POSTS (1 REQ. PER LOCATION)
C - FIELD PUNCHING OF HOLES INTO GUARDRAIL SHALL BE AS DIRECTED BY THE ENGINEER.

TYPICAL GUARDRAIL AND GUARDRAIL POST ALTERNATIVES

STATE OF NORTH CAROLINA DEPT. OF TRANSPORTATION DIVISION OF HIGHWAYS RALEIGH, N.C.

ENGLISH DETAIL DRAWING FOR
GUARDRAIL INSTALLATION

SHEET 3 OF 7
862D02

STATE OF NORTH CAROLINA DEPT. OF TRANSPORTATION DIVISION OF HIGHWAYS RALEIGH, N.C.

ENGLISH DETAIL DRAWING FOR
GUARDRAIL INSTALLATION

SHEET 4 OF 7
862D02

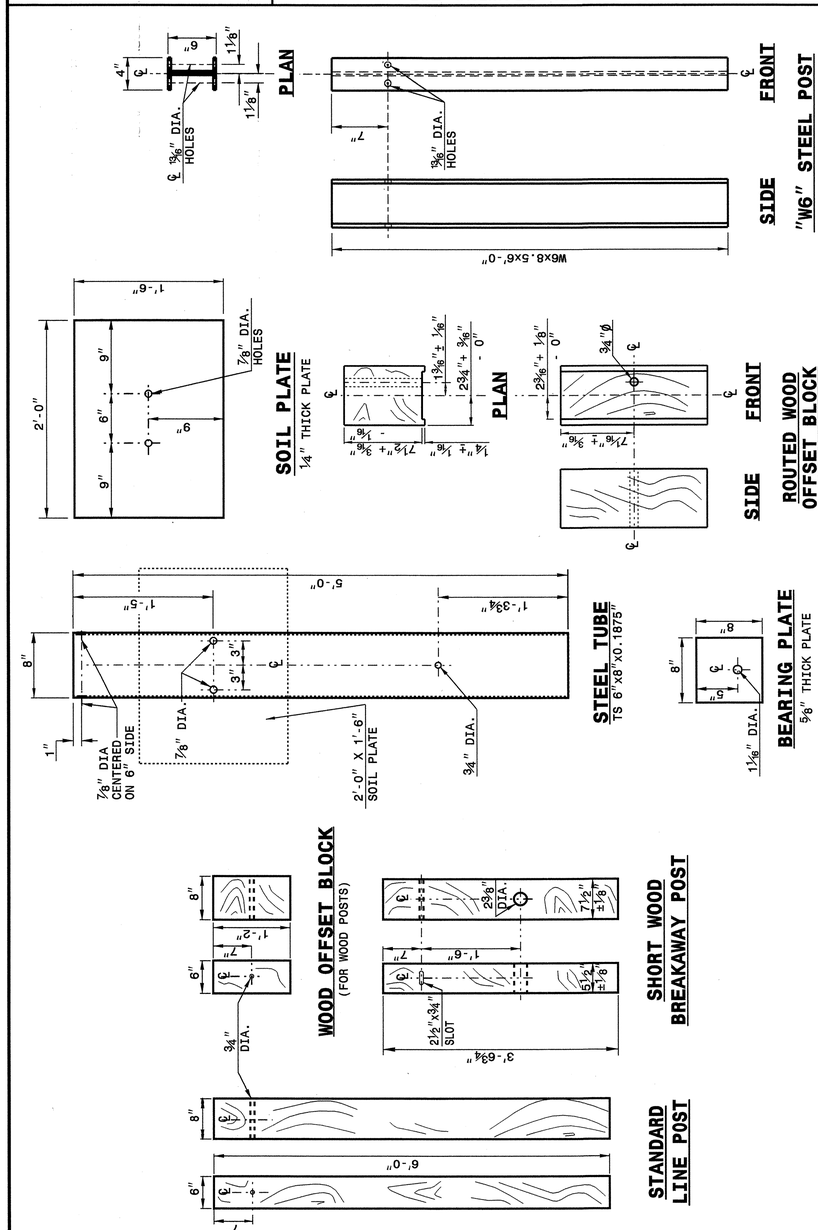

STATE OF NORTH CAROLINA DEPT. OF TRANSPORTATION DIVISION OF HIGHWAYS RALEIGH, N.C.

ENGLISH DETAIL DRAWING FOR
GUARDRAIL INSTALLATION

SHEET 4 OF 7
862D02

NORTH CAROLINA PROFESSIONAL SEAL 022966 ENGINEER JOEL S. HOUPTON
8/25/04

DESIGN SERVICES UNIT
STANDARDS AND SPECIAL DESIGN
Office 919-250-4128 FAX 919-250-4119

SEE PLATE FOR TITLE

ORIGINAL BY: 2002 STD.862.02 DATE:
MODIFIED BY: E.E. WARD DATE: 02-09-03
CHECKED BY: DATE: 4-29-04
FILE SPEC.: /usr/stds/02todetail/english/86202/862d02.dgn

23-APR-2004 14:01
W:\Special Details\ericward\stds\02 Stds to Special Details\english\86202\0862d02.dgn
ericward AT DS212260

STATE OF NORTH CAROLINA
DEPT. OF TRANSPORTATION
DIVISION OF HIGHWAYS
RALEIGH, N.C.

ENGLISH DETAIL DRAWING FOR
GUARDRAIL INSTALLATION

SHEET 5 OF 7
862D02

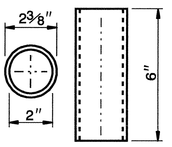

BREAKAWAY TERMINAL POST SLEEVE

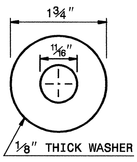

DETAIL OF STANDARD WASHER

STANDARD WASHER: TYPICAL USE UNDER NUT WITH WOOD POST

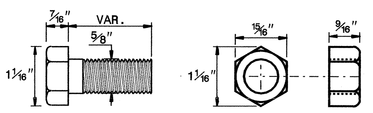

DETAIL OF STANDARD HEX BOLT AND NUT

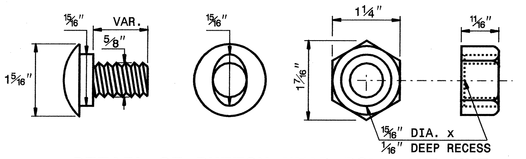

DETAIL OF BUTTON HEAD BOLT AND NUT

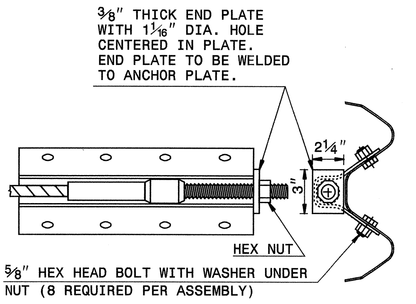

ANCHOR PLATE ASSEMBLY

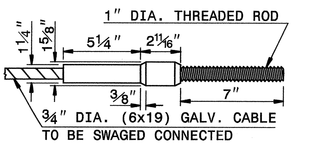

SWAGED CABLE

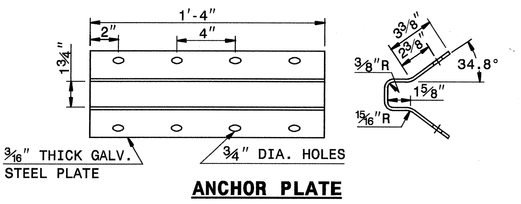

ANCHOR PLATE

CABLE ASSEMBLY

SYSTEM PARTS

STATE OF NORTH CAROLINA
DEPT. OF TRANSPORTATION
DIVISION OF HIGHWAYS
RALEIGH, N.C.

ENGLISH DETAIL DRAWING FOR
GUARDRAIL INSTALLATION

SHEET 5 OF 7
862D02

STATE OF NORTH CAROLINA
DEPT. OF TRANSPORTATION
DIVISION OF HIGHWAYS
RALEIGH, N.C.

ENGLISH DETAIL DRAWING FOR
GUARDRAIL INSTALLATION

SHEET 6 OF 7
862D02

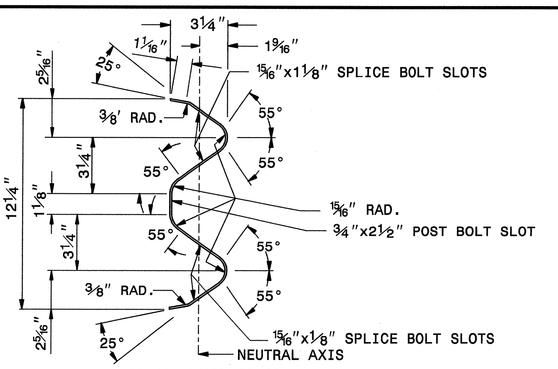

SECTION X-X

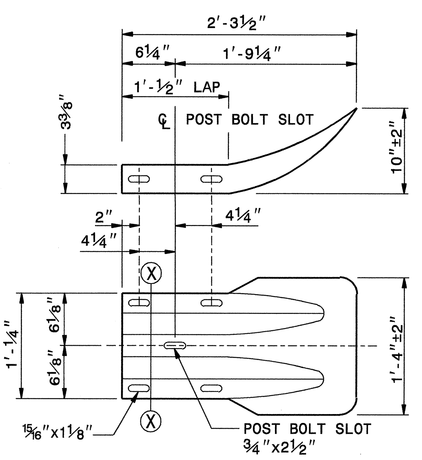

TERMINAL END SECTION

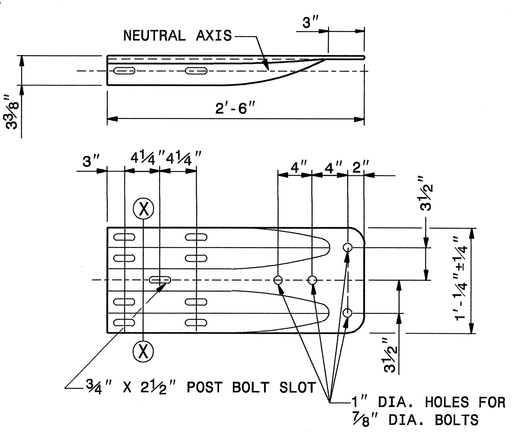

TYPICAL END SHOE

SYSTEM PARTS - GENERAL USE

STATE OF NORTH CAROLINA
DEPT. OF TRANSPORTATION
DIVISION OF HIGHWAYS
RALEIGH, N.C.

ENGLISH DETAIL DRAWING FOR
GUARDRAIL INSTALLATION

SHEET 6 OF 7
862D02

DESIGN SERVICES UNIT
STANDARDS AND SPECIAL DESIGN
Office 919-250-4128 FAX 919-250-4119

SEE PLATE FOR TITLE

ORIGINAL BY: 2002 STD. 862.02 DATE:
MODIFIED BY: E.E. WARD DATE: 02-09-03
CHECKED BY: DATE:
FILE SPEC.: [illegible]

NORTH CAROLINA PROFESSIONAL SEAL 02966 ENGINEER JOEL R. HOUPE
8/25/04

PROJECT REFERENCE NO.: 1-2102
SHEET NO.: 2-0

PROJECT REFERENCE NO.	SHEET NO.
1-2102	2-P

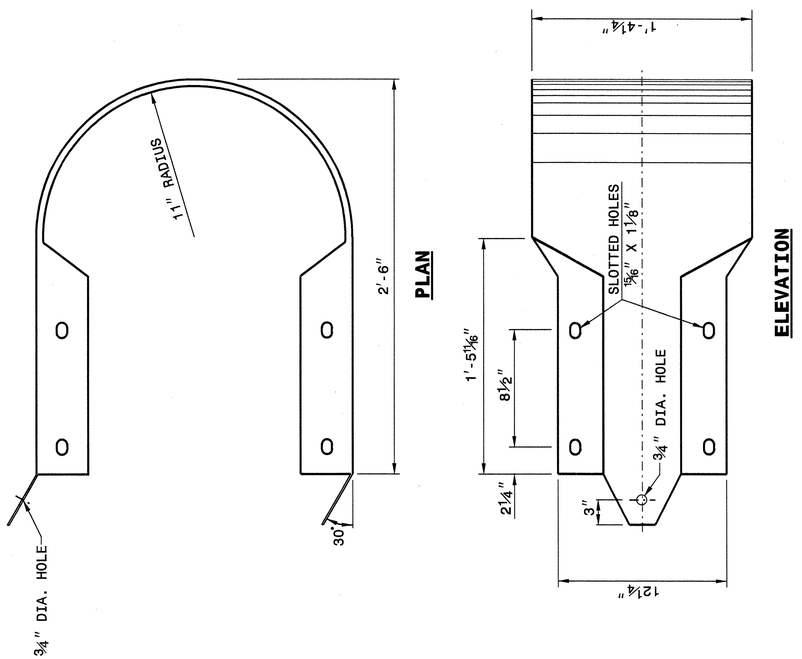

STATE OF NORTH CAROLINA DEPT. OF TRANSPORTATION DIVISION OF HIGHWAYS RALEIGH, N.C.	ENGLISH DETAIL DRAWING FOR **GUARDRAIL INSTALLATION**	SHEET 7 OF 7 **862D02**

STATE OF NORTH CAROLINA DEPT. OF TRANSPORTATION DIVISION OF HIGHWAYS RALEIGH, N.C.	ENGLISH DETAIL DRAWING FOR **GUARDRAIL INSTALLATION**	SHEET 7 OF 7 **862D02**

NORTH CAROLINA PROFESSIONAL SEAL 022966 ENGINEER JOEL S. HOWERTON
8/25/14

DESIGN SERVICES UNIT
STANDARDS AND SPECIAL DESIGN
Office 919-250-4128 FAX 919-250-4119

SEE PLATE FOR TITLE

ORIGINAL BY: 2002 STD.862.02 DATE:
MODIFIED BY: E.E. WARD DATE: 02-09-03
CHECKED BY: DATE: 4-29-04
FILE SPEC.: /usr/stds/02todetail/english/86202/862d02.dgn

5/14/99
29-APR-2004 14:01
W:\Special Details\ericward\stds\02 Stds to Special Details\english\86202\0862d02.dgn
ericward AT DS212260

STATE OF NORTH CAROLINA
DEPT. OF TRANSPORTATION
DIVISION OF HIGHWAYS
RALEIGH, N.C.

ENGLISH DETAIL DRAWING FOR
STRUCTURE ANCHOR UNITS
ANCHORAGE FOR GUARDRAIL POST ON BOX CULVERT

SHEET 1 OF 4
862D03

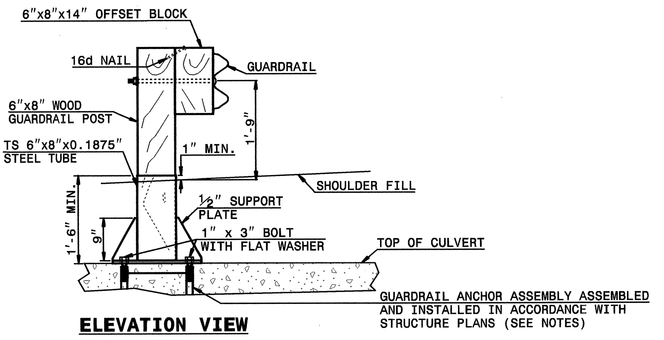

ELEVATION VIEW

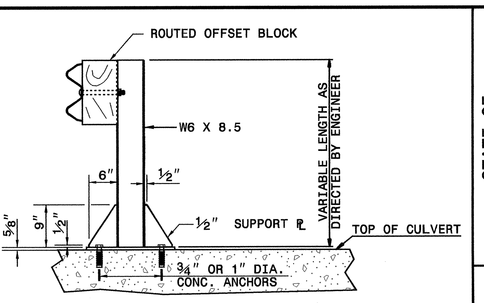

ELEVATION VIEW

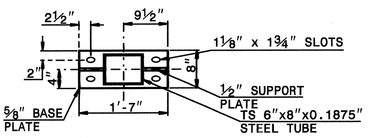

PLAN VIEW

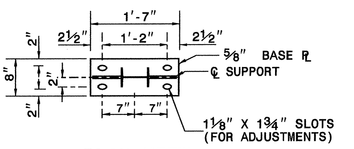

PLAN VIEW

NOTES FOR:
GUARDRAIL POST ANCHORED TO STRUCTURE:
- -USE FULL LENGTH ¼" BUTT WELDS AT ALL LOCATIONS OF CONTACT BETWEEN THE BASE PLATE, SUPPORT PLATES AND STEEL POST OR STEEL TUBE.
- -USE POST AND POST BASE PLATES CONFORMING TO THE REQUIREMENTS OF A.S.T.M. A-36 AND GALVANIZED AFTER FABRICATION TO CONFORM TO A.S.T.M. A-123.
- -USE WOOD POSTS WHICH FIT SNUGLY IN THE STEEL TUBE WITH A MAXIMUM OF ⅛" CLEARANCE BETWEEN TUBE WALL AND POST.

NEW STRUCTURES:
- -ATTACH POST TO INSERT ASSEMBLY UNITS (USING ANCHOR BOLTS SUPPLIED WITH INSERTS) WHICH HAVE BEEN CAST INTO THE STRUCTURE DURING CONSTRUCTION.

EXISTING STRUCTURES:
- -USE CONCRETE ANCHORS CONSISTING OF A STUD BOLT WITH NUT AND WASHER. USE STUDS THREADED ON ONE END AND HAVING AN EXPANDED WEDGE ASSEMBLY POSITIONED AROUND A TAPERED AREA AT THE OTHER END. USE ANCHORS WHICH PROVIDE A MINIMUM SAFE HOLDING POWER OF 2875 LBS. FOR A ¾" OR 1" DIAMETER BOLT. CALCULATE HOLDING POWER BASED ON ¼ THE ACTUAL HOLDING POWER OF THE ANCHOR IN 3500 PSI CONCRETE AS DETERMINED BY AN APPROVED COMMERCIAL TESTING LABORATORY.

- -USE ANCHORS GALVANIZED IN ACCORDANCE WITH A.S.T.M. A-153. SIZE HOLES FOR THE CONCRETE ANCHORS IN ACCORDANCE WITH THE ANCHOR MANUFACTURER'S RECOMMENDATIONS. DRILL HOLES WITH A CARBIDE OR DIAMOND TIPPED MASONRY BIT POWERED BY A ROTARY OR ROTARY IMPACT DRILL. NO OTHER IMPACT TOOLS WILL BE PERMITTED. DRILL HOLES VERTICALLY. FURNISH DOCUMENTATION OF HOLE SIZE RECOMMENDED FOR THE SPECIFIED ANCHOR TO THE ENGINEER BEFORE DRILLING HOLES. THOROUGHLY CLEAN HOLES FOR ANCHORS OF ALL CONCRETE CHIPS, DUST, GREASE, OIL, ETC. BEFORE ANCHORS ARE INSTALLED. REPAIR ALL DAMAGE CAUSED BY THIS WORK TO THE SATISFACTION OF THE ENGINEER.

ANCHORAGE FOR GUARDRAIL POST ON BOX CULVERT

STATE OF NORTH CAROLINA
DEPT. OF TRANSPORTATION
DIVISION OF HIGHWAYS
RALEIGH, N.C.

ENGLISH DETAIL DRAWING FOR
STRUCTURE ANCHOR UNITS
ANCHORAGE FOR GUARDRAIL POST ON BOX CULVERT

SHEET 1 OF 4
862D03

STATE OF NORTH CAROLINA
DEPT. OF TRANSPORTATION
DIVISION OF HIGHWAYS
RALEIGH, N.C.

ENGLISH DETAIL DRAWING FOR
STRUCTURE ANCHOR UNITS
GUARDRAIL ANCHOR UNIT, TYPE III
FOR ATTACHMENT TO RAIL ON BRIDGE

SHEET 2 OF 4
862D03

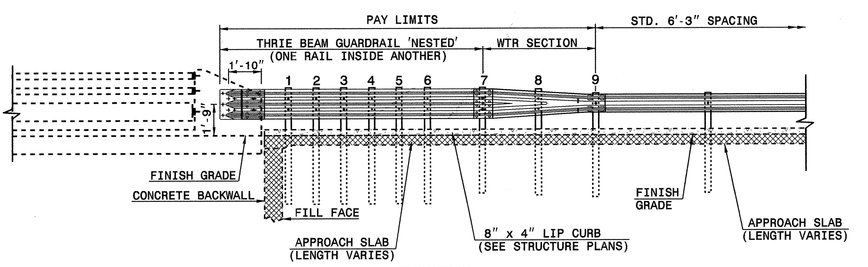

ELEVATION

NOTE:
- **POST NOT REQUIRED FOR SKEW ANGLES GREATER THAN 150° OR LESS THAN 30° UNLESS OTHERWISE DIRECTED BY THE ENGINEER.
- *THE DISTANCE FROM END OF BRIDGE RAIL TO CENTER LINE OF THE FIRST POST SHOULD BE 11½" IF CONCRETE BACKWALL IS NOT PRESENT.
- -SHOULDER BERM GUTTER MUST BE INSTALLED WITHIN THE PAY LIMITS IF THE ANCHOR UNIT IS NOT ADJACENT TO AN APPROACH SLAB.
- -MEASURE GUARDRAIL HEIGHT FROM THE TOP OF ADJACENT SURFACE (SHOULDER, BERM, OR GUTTER).
- -USE NO STEEL POSTS WITHIN THE GUARDRAIL ANCHOR UNIT LIMITS.
- -LAP JOINTS IN THE DIRECTION OF TRAFFIC FLOW.
- -SEE SHEET 4 FOR POST SECTIONS 1 THRU 9.

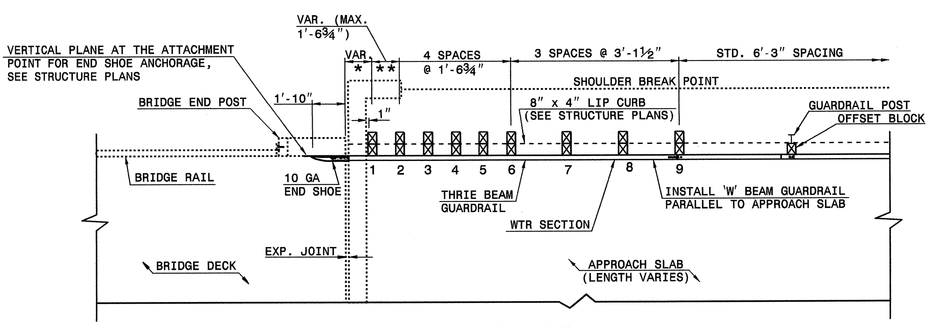

PLAN VIEW

GUARDRAIL ANCHOR UNIT, TYPE III FOR ATTACHMENT TO RAIL ON BRIDGE

STATE OF NORTH CAROLINA
DEPT. OF TRANSPORTATION
DIVISION OF HIGHWAYS
RALEIGH, N.C.

ENGLISH DETAIL DRAWING FOR
STRUCTURE ANCHOR UNITS
GUARDRAIL ANCHOR UNIT, TYPE III
FOR ATTACHMENT TO RAIL ON BRIDGE

SHEET 2 OF 4
862D03

DESIGN SERVICES UNIT
STANDARDS AND SPECIAL DESIGN
OFFICE 919-250-4128 FAX 919-250-4119

SEE PLATE FOR TITLE

ORIGINAL BY: 2002 STANDARDS DATE: 01-15-02
MODIFIED BY: E.E. WARD DATE: 04-07-04
CHECKED BY: T.P. WARD DATE: 4-7-04
FILE SPEC.: stds/02stds/details/english/862d03.dgn

NORTH CAROLINA PROFESSIONAL SEAL 02986 ENGINEER
LOUIS B. HAMPTON JR.
8/25/04

PROJECT REFERENCE NO. 1-2102
SHEET NO. 2-0

STATE OF NORTH CAROLINA
DEPT. OF TRANSPORTATION
DIVISION OF HIGHWAYS
RALEIGH, N.C.

ENGLISH DETAIL DRAWING FOR
STRUCTURE ANCHOR UNITS
GUARDRAIL ANCHOR UNIT, TYPE III
FOR ATTACHMENT TO RAIL ON APPROACH SLAB

SHEET 3 OF 4
862D03

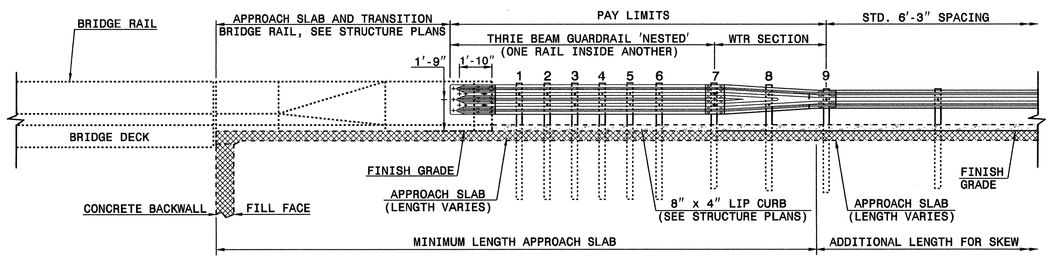

ELEVATION

NOTE:
**POST NOT REQUIRED FOR SKEW ANGLES GREATER THAN 150° OR LESS THAN 30° UNLESS OTHERWISE DIRECTED BY THE ENGINEER.
-MEASURE GUARDRAIL HEIGHT FROM THE TOP OF ADJACENT SURFACE (SHOULDER, BERM, OR GUTTER).
-USE NO STEEL POSTS WITHIN THE GUARDRAIL ANCHOR UNIT LIMITS.
-LAP JOINTS IN THE DIRECTION OF TRAFFIC FLOW.
-SEE SHEET 4 FOR POST SECTIONS 1 THRU 9.

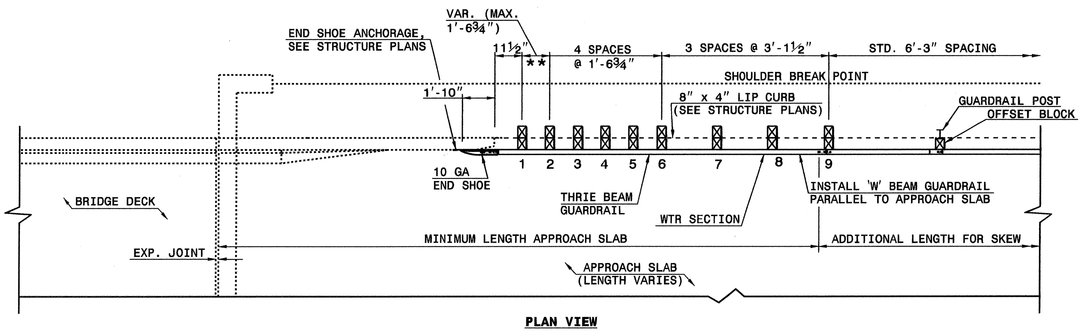

PLAN VIEW

GUARDRAIL ANCHOR UNIT, TYPE III
FOR ATTACHMENT TO RAIL ON APPROACH SLAB

STATE OF NORTH CAROLINA
DEPT. OF TRANSPORTATION
DIVISION OF HIGHWAYS
RALEIGH, N.C.

ENGLISH DETAIL DRAWING FOR
STRUCTURE ANCHOR UNITS
GUARDRAIL ANCHOR UNIT, TYPE III
FOR ATTACHMENT TO RAIL ON APPROACH SLAB

SHEET 3 OF 4
862D03

STATE OF NORTH CAROLINA
DEPT. OF TRANSPORTATION
DIVISION OF HIGHWAYS
RALEIGH, N.C.

ENGLISH DETAIL DRAWING FOR
STRUCTURE ANCHOR UNITS
GUARDRAIL ANCHOR UNIT, TYPE III

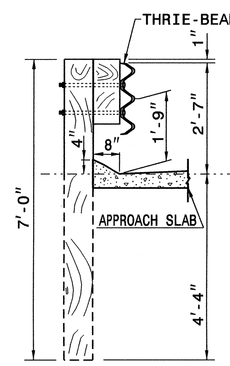

SECTION OF THRIE BEAM POSTS 1 THRU 6

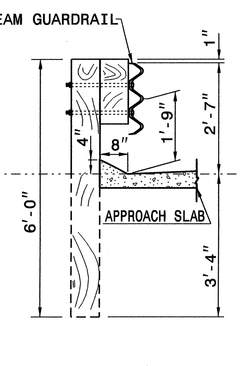

SECTION OF THRIE BEAM POST 7

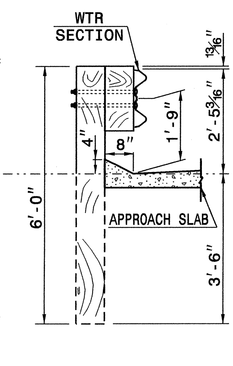

SECTION OF WTR BEAM POST 8

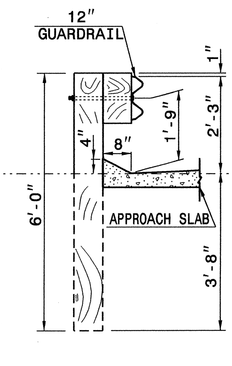

SECTION OF 'W' BEAM POST 9

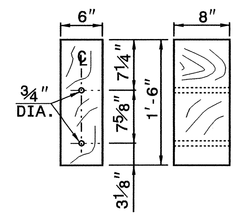

THRIE BEAM OFFSET BLOCK

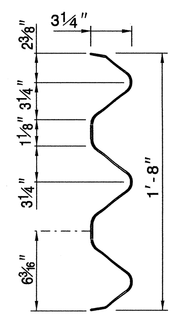

THRIE-BEAM SECTION

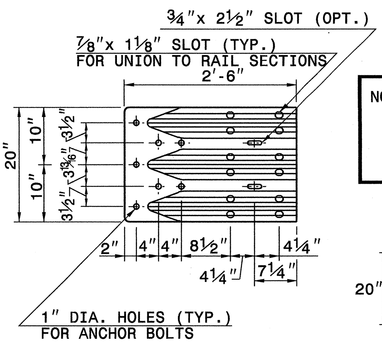

END SHOE

NOTE: THE MID POST AND OFFSET BLOCK OF THE WTR SECTION WILL REQUIRE SPECIAL BOLT HOLE DRILLING IN THE THRIE BEAM OFFSET BLOCK AND LINE POST.

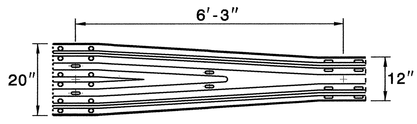

WTR SECTION
ELEVATION VIEW

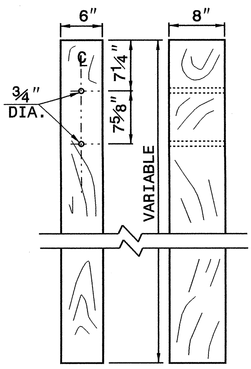

THRIE BEAM LINE POST

STATE OF NORTH CAROLINA
DEPT. OF TRANSPORTATION
DIVISION OF HIGHWAYS
RALEIGH, N.C.

ENGLISH DETAIL DRAWING FOR
STRUCTURE ANCHOR UNITS
GUARDRAIL ANCHOR UNIT, TYPE III

SHEET 4 OF 4
862D03

DESIGN SERVICES UNIT
STANDARDS AND SPECIAL DESIGN
Office 919-250-4128 FAX 919-250-4119

SEE PLATE FOR TITLE

ORIGINAL BY: 2002 STANDARDS DATE: 01-15-02
MODIFIED BY: E.E. WARD DATE: 04-07-04
CHECKED BY: J.K. Vaughn DATE: 4-7-04
FILE SPEC.: stds/02stds/details/english/862d03.dgn

NORTH CAROLINA PROFESSIONAL SEAL 02366 ENGINEER JOHN SCOTT HOWARD
8/26/04

PROJECT REFERENCE NO. 1-2102
SHEET NO. 2-R

PROJECT REFERENCE NO.	SHEET NO.
I-2102	2-S

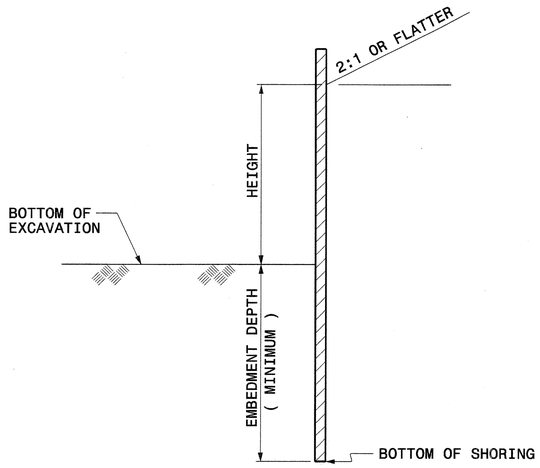

TEMPORARY SHORING

(SLOPING OR LEVEL WITH TRAFFIC SURCHARGE, NO BARRIER IMPACT)

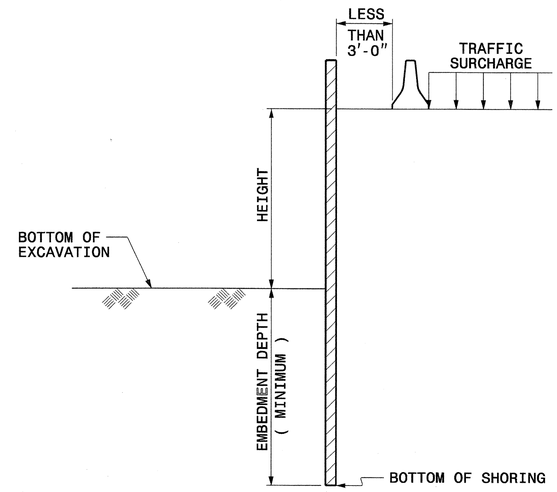

TEMPORARY SHORING - BARRIER SUPPORTED

(LEVEL WITH TRAFFIC SURCHARGE, WITH BARRIER IMPACT)

NOTES

FOR TEMPORARY SHORING FOR MAINTENANCE OF TRAFFIC, SEE SPECIAL PROVISIONS.

SELECT THE APPROPRIATE STANDARD SHORING DESIGN FOR TEMPORARY SHORING FOR MAINTENANCE OF TRAFFIC IN LIEU OF SUBMITTING CONTRACTOR SHORING DESIGN. USE STANDARD SHORING DESIGN ONLY WHEN ALL OF THE FOLLOWING CRITERIA ARE MET:

- MAXIMUM HEIGHT OF SHORING EXCAVATION IS 11 FEET
- GROUNDWATER TABLE IS NOT ABOVE BOTTOM OF THE EXCAVATION
- BACKFILL SLOPE IS 2:1 OR FLATTER
- TRAFFIC SURCHARGE EQUAL TO 240 PSF
- SOLDIER PILE SPACING OF 6 FEET
- TIMBER LAGGING SHALL HAVE A MINIMUM THICKNESS OF 3 INCHES

SUBMIT "STANDARD SHORING SELECTION" FORM TO ENGINEER PRIOR TO CONSTRUCTION OF SHORING.

DO NOT USE THE STANDARD SHORING DESIGNS WHEN VERY SOFT SOIL OR MUCK IS PRESENT WITHIN THE SHORING EMBEDMENT ZONE.

CONTRACTOR MUST VERIFY LOCATION OF GROUNDWATER TABLE PRIOR TO CONSTRUCTION OF SHORING.

THE CONTRACTOR HAS THE OPTION OF USING SOLDIER PILES SET IN DRILLED HOLES WITH A SHORTENED LENGTH EQUAL TO 75% OF THE EMBEDMENT DEPTHS SHOWN IN THE TABLE. FOR DRILLING REQUIREMENTS, SEE TEMPORARY SHORING FOR MAINTENANCE OF TRAFFIC SPECIAL PROVISION.

IF DESIGN EMBEDMENT DEPTH IS NOT ACHIEVED, THEN NOTIFY THE ENGINEER IMMEDIATELY.

GROUNDWATER TABLE CONDITIONS

1) WHEN WATER TABLE IS ABOVE THE BOTTOM OF EXCAVATION, SUBMIT CONTRACTOR SHORING DESIGN TO THE ENGINEER FOR APPROVAL.

2) WHEN WATER TABLE IS BELOW THE BOTTOM OF EXCAVATION AND ABOVE THE BOTTOM OF SHORING, USE "WATER TABLE" CASE.

3) WHEN WATER TABLE IS BELOW BOTTOM OF SHORING, USE "NO WATER TABLE" CASE.

		TEMPORARY SHORING					TEMPORARY SHORING - BARRIER SUPPORTED				
		CANTILEVER SHEETING		DRIVEN SOLDIER PILE			CANTILEVER SHEETING		DRIVEN SOLDIER PILE		
CASE	HEIGHT (FT)	MINIMUM EMBEDMENT DEPTH (FT)	MINIMUM SECTION MODULUS (IN^3 / FT OF WALL)	MINIMUM EMBEDMENT DEPTH (FT)			MINIMUM EMBEDMENT DEPTH (FT)	MINIMUM SECTION MODULUS (IN^3 / FT OF WALL)	MINIMUM EMBEDMENT DEPTH (FT)		
				HP 10x42	HP 12x53	HP 14x73			HP 10x42	HP 12x53	HP 14x73
"NO WATER TABLE"	< 6	7.5	3.0	8.0	8.0	8.0	11.0	10.0	9.5	9.5	9.5
	7	8.5	4.5	9.5	9.5	9.5	12.0	12.0	10.5	10.5	10.5
	8	10.0	6.5	10.5	10.5	10.5	12.5	14.0	11.5	11.5	11.5
	9	11.0	9.5	--	12.0	12.0	13.5	16.5	--	12.5	12.5
	10	12.5	13.0	--	--	13.5	14.0	19.5	--	13.5	13.5
	11	13.5	17.0	--	--	14.5	15.0	22.5	--	--	14.5
"WATER TABLE"	< 6	11.5	4.5	11.5	11.5	11.5	16.0	12.0	13.0	13.0	13.0
	7	13.0	7.0	13.0	13.0	13.0	17.0	14.5	14.5	14.5	14.5
	8	15.0	10.0	--	15.0	15.0	18.0	17.0	--	15.5	15.5
	9	17.0	14.0	--	17.0	17.0	19.0	20.0	--	17.0	17.0
	10	18.5	19.5	--	--	18.5	20.0	23.5	--	--	18.5
	11	20.5	26.0	--	--	--	21.0	28.0	--	--	20.0

NORTH CAROLINA PROFESSIONAL SEAL 022966 ENGINEER JOEL S. HOWERTON

8/25/04

DESIGN SERVICES UNIT
STANDARDS AND SPECIAL DESIGN
Office 919-250-4128 FAX 919-250-4119

STANDARD TEMPORARY SHORING FOR MAINTENANCE OF TRAFFIC

ORIGINAL BY: SOILS & FOUNDATIONS DATE: 10-2001
MODIFIED BY: DATE:
CHECKED BY: DATE: 6/14/04
FILE SPEC.: erieward:/usr/details/stand/shoring detail.dgn

14-JUN-2004 14:29
W:\special Details\erieward\usr\details\stand\tempshoring.dgn
erieward AT DS02.DOT.STATE.NC.US

28-OCT-2004 13:40
W:\Special Details\ericward\stds\02' Stds to Special Details\english\66501\0665d01.dgn
.ericward AT DS212260

STATE OF
NORTH CAROLINA
DEPT. OF TRANSPORTATION
DIVISION OF HIGHWAYS
RALEIGH, N.C.

ENGLISH DETAIL DRAWING FOR
ASPHALT SHOULDERS
MILLED RUMBLE STRIPS

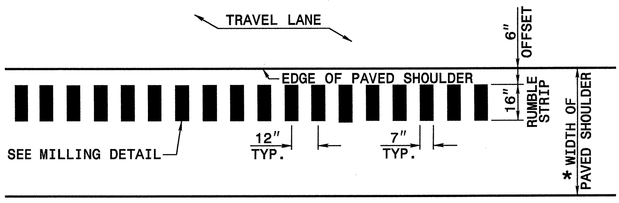

* FOR WIDTHS SEE TYPICAL SECTIONS AND PLAN SHEETS

PLAN VIEW
PAVED SHOULDER

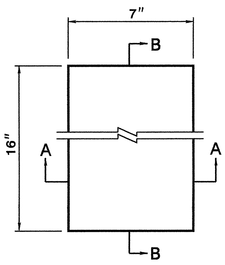

PLAN VIEW
MILLING DETAIL

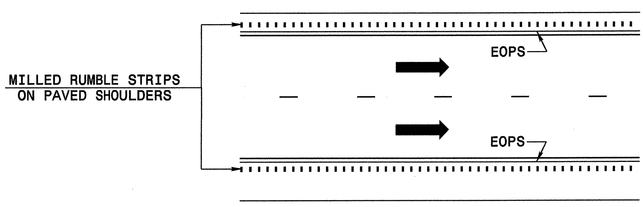

LANE TREATMENT

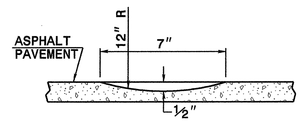

SECTION A-A

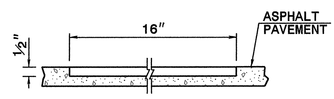

SECTION B-B

SHEET 1 OF 2
665D01

STATE OF
NORTH CAROLINA
DEPT. OF TRANSPORTATION
DIVISION OF HIGHWAYS
RALEIGH, N.C.

ENGLISH DETAIL DRAWING FOR
ASPHALT SHOULDERS
MILLED RUMBLE STRIPS

SHEET 1 OF 2
665D01

STATE OF
NORTH CAROLINA
DEPT. OF TRANSPORTATION
DIVISION OF HIGHWAYS
RALEIGH, N.C.

ENGLISH DETAIL DRAWING FOR
ASPHALT SHOULDERS
MILLED RUMBLE STRIPS

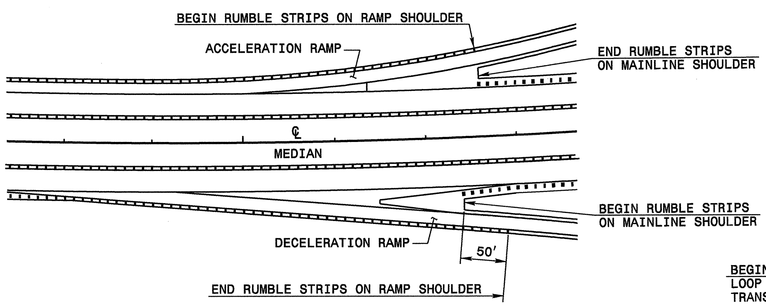

TREATMENT AT RAMP TERMINALS

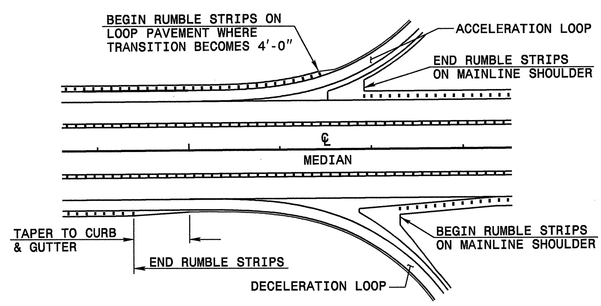

TREATMENT AT LOOP TERMINALS

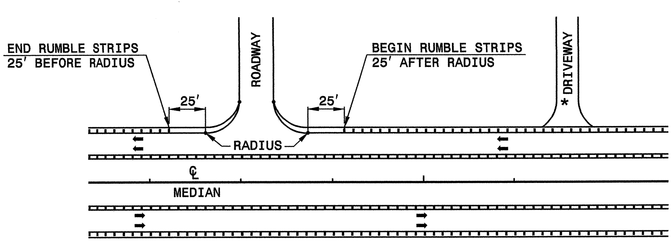

TREATMENT AT INTERSECTIONS
(ROADWAY OR DRIVEWAY)

* TERMINATE AT DRIVEWAYS AS DIRECTED BY THE ENGINEER.

SHEET 2 OF 2
665D01

STATE OF
NORTH CAROLINA
DEPT. OF TRANSPORTATION
DIVISION OF HIGHWAYS
RALEIGH, N.C.

ENGLISH DETAIL DRAWING FOR
ASPHALT SHOULDERS
MILLED RUMBLE STRIPS

SHEET 2 OF 2
665D01

PROJECT SERVICES UNIT
STANDARDS AND SPECIAL DESIGN
Office 919-250-4128 FAX 919-250-4119

SEE PLATE FOR TITLE

ORIGINAL BY: 2002 STANDARDS DATE: 01-15-02
MODIFIED BY: E.E. WARD DATE: 09-16-04
CHECKED BY: DATE: 11/9/04
FILE SPEC.: 665d01 02stdstodetails/englsh/665d01.dgn

PROJECT REFERENCE NO. I-2102
SHEET NO. 2-T

STATE OF NORTH CAROLINA
SUMMARY OF QUANTITIES

PROJECT REFERENCE No.	SHEET No.
I-2102	3 (1 OF 2)

STATE OF NORTH CAROLINA
DIVISION OF HIGHWAYS
ROADWAY SUMMARY OF QUANTITIES FOR CONTRACT - C201429

ItemNumber	Sec #	Quantity	Unit	Description
0000100000-N	800	Lump Sum		MOBILIZATION
0000400000-N	801	Lump Sum		CONSTRUCTION SURVEYING
0029000000-N	SP	Lump Sum		REINFORCED BRIDGE APPROACH FILL, STATION ********** (20+69.29)
0043000000-N	226	Lump Sum		GRADING
0050000000-E	226	1	ACR	SUPPLEMENTARY CLEARING & GRUBBING
0057000000-E	226	30	CY	UNDERCUT EXCAVATION
0199000000-E	SP	2,820	SF	TEMPORARY SHORING
0318000000-E	300	352	TON	FOUNDATION CONDITIONING MATERIAL, MINOR STRS
0366000000-E	310	2,032	LF	15" RC PIPE CULVERTS, CLASS III
0372000000-E	310	765	LF	18" RC PIPE CULVERTS, CLASS III
0378000000-E	310	240	LF	24" RC PIPE CULVERTS, CLASS III
0384000000-E	310	168	LF	30" RC PIPE CULVERTS, CLASS III
0390000000-E	310	56	LF	36" RC PIPE CULVERTS, CLASS III
0708000000-E	310	56	LF	15" BIT COAT CS PIPE CULVERTS, TYPE B 0.064" THICK
0806000000-E	310	2	EA	15" BIT COAT CS PIPE ELBOWS, TYPE B 0.064" THICK
0995000000-E	340	1,038	LF	PIPE REMOVAL
1121000000-E	520	1,691	TON	AGGREGATE BASE COURSE
1220000000-E	545	250	TON	INCIDENTAL STONE BASE
1330000000-E	607	250	SY	INCIDENTAL MILLING
1489000000-E	610	10,930	TON	ASPHALT CONC BASE COURSE, TYPE B25.0B
1498000000-E	610	7,288	TON	ASPHALT CONC INTERMEDIATE COURSE, TYPE I19.0B
1519000000-E	610	4,931	TON	ASPHALT CONC SURFACE COURSE, TYPE S9.5B
1560000000-E	620	1,110	TON	ASPHALT BINDER FOR PLANT MIX, GRADE PG 64-22

ItemNumber	Sec #	Quantity	Unit	Description
1570000000-E	620	45	TON	ASPHALT BINDER FOR PLANT MIX, GRADE PG 76-22
1663000000-E	650	750	TON	OPEN-GRADED ASPHALT FRICTION COURSE, TYPE FC-2 MODIFIED
1693000000-E	654	161	TON	ASPHALT PLANT MIX, PAVEMENT REPAIR
1340000000-E	665	6770	LF	Milled Rumble Strips
2000000000-N	806	37	EA	RIGHT OF WAY MARKERS
2253000000-E	840	0.893	CY	PIPE COLLARS
2264000000-E	840	1.074	CY	PIPE PLUGS
2286000000-N	840	38	EA	MASONRY DRAINAGE STRUCTURES
2308000000-E	840	2.8	LF	MASONRY DRAINAGE STRUCTURES
2352000000-N	840	3	EA	FRAME WITH GRATE, STD 840.**** (840.20)
2364000000-N	840	6	EA	FRAME WITH TWO GRATES, STD 840.16
2365000000-N	840	10	EA	FRAME WITH TWO GRATES, STD 840.22
2374000000-N	840	3	EA	FRAME WITH GRATE & HOOD, STD 840.03, TYPE ** (E)
2374000000-N	840	8	EA	FRAME WITH GRATE & HOOD, STD 840.03, TYPE ** (F)
2374000000-N	840	6	EA	FRAME WITH GRATE & HOOD, STD 840.03, TYPE ** (G)
2549000000-E	846	5,078	LF	2'-6" CONCRETE CURB & GUTTER
2577000000-E	846	863	LF	CONCRETE EXPRESSWAY GUTTER
2612000000-E	848	158	SY	6" CONCRETE DRIVEWAY
2619000000-E	850	185	SY	4" CONCRETE PAVED DITCH
2655000000-E	852	797	SY	5" MONOLITHIC CONCRETE ISLANDS (KEYED IN)
2830000000-N	858	5	EA	ADJUSTMENT OF MANHOLES
2845000000-N	858	12	EA	ADJUSTMENT OF METER BOXES OR VALVE BOXES
3030000000-E	862	2,925	LF	STEEL BM GUARDRAIL
3045000000-E	862	50	LF	STEEL BM GUARDRAIL, SHOP CURVED

ItemNumber	Sec #	Quantity	Unit	Description
3150000000-N	862	5	EA	ADDITIONAL GUARDRAIL POSTS
3195000000-N	862	1	EA	GUARDRAIL ANCHOR UNITS, TYPE AT-1
3210000000-N	862	2	EA	GUARDRAIL ANCHOR UNITS, TYPE CAT-1
3215000000-N	862	3	EA	GUARDRAIL ANCHOR UNITS, TYPE III
3270000000-N	SP	4	EA	GUARDRAIL ANCHOR UNITS, TYPE 350
3360000000-E	863	1,160	LF	REMOVE EXISTING GUARDRAIL
3380000000-E	862	100	LF	TEMPORARY STEEL BM GUARDRAIL
3387000000-N	862	2	EA	GUARDRAIL ANCHOR UNITS, TYPE ********** TEMPORARY (XI)
3389100000-N	SP	2	EA	GUARDRAIL ANCHOR UNITS, TYPE 350 TEMPORARY
3503000000-E	866	3,795	LF	WOVEN WIRE FENCE, 47" FABRIC
3509000000-E	866	227	EA	4" TIMBER FENCE POSTS, 7'-6" LONG
3515000000-E	866	84	EA	5" TIMBER FENCE POSTS, 8'-0" LONG
3536000000-E	866	1,060	LF	CHAIN LINK FENCE, 48" FABRIC
3542000000-E	866	87	EA	METAL LINE POSTS FOR 48" CHAIN LINK FENCE
3548000000-E	866	4	EA	METAL TERMINAL POSTS FOR 48" CHAIN LINK FENCE
3628000000-E	876	10	TON	PLAIN RIP RAP, CLASS I
3649000000-E	876	68	TON	PLAIN RIP RAP, CLASS B
3656000000-E	876	1,060	SY	FILTER FABRIC FOR DRAINAGE
3659000000-N	SP	1	EA	PREFORMED SCOUR HOLES WITH LEVEL SPREADER APRON
4048000000-E	902	2	CY	REINFORCED CONCRETE SIGN FOOTINGS
4054000000-E	902	1	CY	PLAIN CONCRETE SIGN FOOTINGS
4060000000-E	903	1,133	LB	SUPPORTS, BREAKAWAY STEEL BEAM
4072000000-E	903	1,265	LF	SUPPORTS, 3-LB STEEL U-CHANNEL
4096000000-N	904	7	EA	SIGN ERECTION, TYPE D

ItemNumber	Sec #	Quantity	Unit	Description
4102000000-N	904	34	EA	SIGN ERECTION, TYPE E
4108000000-N	904	8	EA	SIGN ERECTION, TYPE F
4110000000-N	904	3	EA	SIGN ERECTION, TYPE *** (GROUND MOUNTED) (A)
4110000000-N	904	2	EA	SIGN ERECTION, TYPE *** (GROUND MOUNTED) (B)
4115000000-N	904	3	EA	SIGN ERECTION, OVERLAY (OVERHEAD)
4129000000-N	906	2	EA	RELOCATE SIGN, TYPE ***** (D)
4155000000-N	907	33	EA	DISPOSAL OF SIGN SYSTEM, U-CHANNEL
4192000000-N	907	2	EA	DISPOSAL OF SUPPORT, U-CHANNEL
4412000000-E	SP	477	SF	WORK ZONE SIGNS (STATIONARY)
4412100000-E	SP	930	SF	WORK ZONE SIGNS (PORTABLE)
4412200000-E	SP	130	SF	WORK ZONE SIGNS (BARRICADE MOUNTED)
4415000000-N	1115	2	EA	FLASHING ARROW PANELS, TYPE C
4420000000-N	1120	2	EA	CHANGEABLE MESSAGE SIGNS
4430000000-N	1130	400	EA	DRUMS
4435000000-N	1135	100	EA	CONES
4446100000-E	SP	204	LF	BARRICADES (TYPE III)
4455000000-N	1150	200	MD	FLAGGER
4465000000-N	1160	6	EA	TEMPORARY CRASH CUSHIONS
4470000000-N	1160	1	EA	RESET TEMPORARY CRASH CUSHIONS
4475000000-N	1165	2	EA	TRUCK MOUNTED IMPACT ATTENUATOR (45 MPH)
4485000000-E	1170	1,720	LF	PORTABLE CONCRETE BARRIER
4510000000-N	SP	200	HR	POLICE
4615000000-E	1205	3,885	LF	REMOVABLE TAPE PAVEMENT MARKING LINES (4")
4625000000-E	1205	160	LF	REMOVABLE TAPE PAVEMENT MARKING LINES (8")

PROJECT REFERENCE No.	SHEET No.
I-2102	3 (2 OF 2)

STATE OF NORTH CAROLINA
SUMMARY OF QUANTITIES

ItemNumber	Sec #	Quantity	Unit	Description
4640000000-N	1205	4	EA	REMOVABLE TAPE PAVEMENT MARKING CHARACTER
4645000000-N	1205	13	EA	REMOVABLE TAPE PAVEMENT MARKING SYMBOL
4650000000-N	1251	192	EA	TEMPORARY RAISED PAVEMENT MARKERS
4685000000-E	1205	12,075	LF	THERMOPLASTIC PAVEMENT MARKING LINES (4", 90 MILS)
4686000000-E	1205	12,541	LF	THERMOPLASTIC PAVEMENT MARKING LINES (4", 120 MILS)
4695000000-E	1205	460	LF	THERMOPLASTIC PAVEMENT MARKING LINES (8", 90 MILS)
4710000000-E	1205	260	LF	THERMOPLASTIC PAVEMENT MARKING LINES (24", 120 MILS)
4721000000-E	1205	20	EA	THERMOPLASTIC PAVEMENT MARKING CHARACTER (120MIL)
4725000000-E	1205	55	EA	THERMOPLASTIC PAVEMENT MARKING SYMBOL (90 MILS)
4770000000-E	1205	2,337	LF	COLD APPLIED PLASTIC PAVEMENT MARKING LINES (4")
4780000000-E	1205	160	LF	COLD APPLIED PLASTIC PAVEMENT MARKING LINES (8")
4800000000-N	1205	4	EA	COLD APPLIED PLASTIC PAVEMENT MARKING CHARACTER
4805000000-N	1205	11	EA	COLD APPLIED PLASTIC PAVEMENT MARKING SYMBOL
4810000000-E	1205	61,660	LF	PAINT PAVEMENT MARKING LINES (4")
4820000000-E	1205	1,060	LF	PAINT PAVEMENT MARKING LINES (8")
4825000000-E	1205	448	LF	PAINT PAVEMENT MARKING LINES (12")
4835000000-E	1205	408	LF	PAINT PAVEMENT MARKING LINES (24")
4840000000-N	1205	20	EA	PAINT PAVEMENT MARKING CHARACTER
4845000000-N	1205	79	EA	PAINT PAVEMENT MARKING SYMBOL
4850000000-E	1205	5,550	LF	REMOVAL OF PAVEMENT MARKING LINES (4")
4900000000-N	1252	62	EA	PERMANENT RAISED PAVEMENT MARKERS

ItemNumber	Sec #	Quantity	Unit	Description
4905000000-N	1253	450	EA	SNOWPLOWABLE PAVEMENT MARKERS
5300000000-E	1505	140	TON	FOUNDATION CONDITIONING MATERIAL, UTILITIES CLASS ******** (VI)
5306000000-E	SP	140	TON	BEDDING MATERIAL, UTILITIES CLASS ********** (VI)
5360000000-E	1510	1,272	LF	6" DI WATER PIPE, PC 350
5402000000-E	1510	1,045	LB	DI RESTRAINED JOINT WATER PIPE FITTINGS, 250# MIN WP
5414000000-E	1510	34	LF	3/4" COPPER WATER PIPE, TYPE K
5480000000-E	1510	375	LB	DUCTILE IRON WATER PIPE FITTINGS, 250# MIN WP
5540000000-E	1510	1	EA	6" GATE VALVE & VALVE BOX, 200# WP
5558000000-E	1510	2	EA	12" GATE VALVE & VALVE BOX, *****WP (200# WP)
5576000000-E	1510	1	EA	**"X**" TAPPING SLEEVE, VALVE & VALVE BOX, *****WP (6" X 6", 200# WP)
5576000000-E	1510	1	EA	**"X**" TAPPING SLEEVE, VALVE & VALVE BOX, *****WP (8" X 6", 200# WP)
5648000000-N	1510	2	EA	RELOCATE EXISTING WATER METER
5672000000-N	1510	5	EA	RELOCATE EXISTING FIRE HYDRANT
5888000000-E	SP	880	LF	GENERIC UTILITY ITEM 12" DI RJ WATER PIPE, PC 350
5888000000-E	SP	380	LF	GENERIC UTILITY ITEM 42" STEEL ENCASEMENT PIPE, 0.375" THICK, BY OPEN CUT
5888000000-E	SP	200	LF	GENERIC UTILITY ITEM 42" STEEL ENCASEMENT PIPE, 0.375" THICK, IN SOIL, BY TRENCHLESS METHOD
5888000000-E	SP	200	LF	GENERIC UTILITY ITEM 42" STEEL ENCASEMENT PIPE, 0.375" TK, NOT IN SOIL, BY TRENCHLESS METHOD
5888000000-E	SP	150	LF	GENERIC UTILITY ITEM 8" DI RJ WATER PIPE, PC 350
6000000000-E	1605	1,925	LF	TEMPORARY SILT FENCE

ItemNumber	Sec #	Quantity	Unit	Description
6006000000-E	1610	450	TON	STONE FOR EROSION CONTROL, CLASS A
6009000000-E	1610	1,320	TON	STONE FOR EROSION CONTROL, CLASS B
6012000000-E	1610	585	TON	SEDIMENT CONTROL STONE
6015000000-E	1615	11.5	ACR	TEMPORARY MULCHING
6018000000-E	1620	400	LB	SEED FOR TEMPORARY SEEDING
6021000000-E	1620	1.75	TON	FERTILIZER FOR TEMPORARY SEEDING
6024000000-E	1622	245	LF	TEMPORARY SLOPE DRAINS
6027000000-N	1622	6	EA	INLET PROTECTION AT TEMPORARY SLOPE DRAINS
6030000000-E	1630	3,405	CY	SILT EXCAVATION
6036000000-E	1631	2,565	SY	MATTING FOR EROSION CONTROL
6038000000-E	SP	397	SY	PERMANENT SOIL REINFORCEMENT MAT
6042000000-E	1632	860	LF	1/4" HARDWARE CLOTH
6084000000-E	1660	13	ACR	SEEDING & MULCHING
6087000000-E	1660	7	ACR	MOWING
6090000000-E	1661	100	LB	SEED FOR REPAIR SEEDING
6093000000-E	1661	0.25	TON	FERTILIZER FOR REPAIR SEEDING
6096000000-E	1662	275	LB	SEED FOR SUPPLEMENTAL SEEDING
6108000000-E	1665	9.75	TON	FERTILIZER TOPDRESSING
[redacted]	[redacted]	[redacted]	[redacted]	[redacted]
6114000000-N	SP	3.5	HR	SPECIALIZED HAND MOWING
6117000000-N	1675	8	EA	RESPONSE FOR EROSION CONTROL
7060000000-E	1705	1,640	LF	SIGNAL CABLE
7120000000-E	1705	17	EA	VEHICLE SIGNAL HEAD (12", 3 SECTION)
7264000000-E	1710	1,090	LF	MESSENGER CABLE (3/8")
7300000000-E	1715	1,080	LF	TRENCHING (UNPAVED)
7324000000-N	1716	7	EA	JUNCTION BOX (STANDARD SIZE)

ItemNumber	Sec #	Quantity	Unit	Description
7360000000-N	1720	6	EA	WOOD POLE
7372000000-N	1721	8	EA	GUY ASSEMBLY
7408000000-E	1722	1	EA	1" RISER WITH WEATHERHEAD
7420000000-E	1722	4	EA	2" RISER WITH WEATHERHEAD
7444000000-E	1725	1,600	LF	INDUCTIVE LOOP SAWCUT
7456000000-E	1726	2,790	LF	LEAD-IN CABLE
7484000000-N	SP	1	EA	MICROWAVE VEHICLE DETECTOR
7576000000-N	1740	4	EA	METAL STRAIN SIGNAL POLE
7613000000-N	SP	4	EA	SOIL TEST
7614000000-E	SP	60	LF	DRILLED PIER FOUNDATION (**" DIA) (42")
7636000000-N	1745	6	EA	SIGN FOR SIGNALS
7684000000-N	1750	1	EA	SIGNAL CABINET FOUNDATION
7688000000-N	SP	1	EA	CABINET BASE ADAPTER
7756000000-N	1751	1	EA	CONTROLLER WITH CABINET (TYPE 2070L, BASE MOUNTED)
7780000000-N	SP	5	EA	DETECTOR CARD (TYPE 2070L)
7980000000-N	SP	2	EA	GENERIC SIGNAL ITEM RELOCATE MICROWAVE VEHICLE DETECTOR

D9CAD212285

COMPUTED BY: BLC DATE: 8/6/2004

CHECKED BY: EEA DATE: 8/6/2004

PROJECT NO.	SHEET NO.
I-2102	3-A

STATE OF NORTH CAROLINA
DIVISION OF HIGHWAYS

LIST OF PIPES, ENDWALLS, ETC. (FOR PIPES 48" & UNDER)

STATION	LOCATION (LT, RT, OR CL)	STRUCTURE NO. FROM	TO	TOP ELEVATION	INVERT ELEVATION	INVERT ELEVATION	SLOPE CRITICAL	CLASS III R.C. PIPE (UNLESS NOTED OTHERWISE) 12"	15"	18"	24"	30"	36"	42"	48"	BITUMINOUS COATED C.S. PIPE TYPE B (UNLESS NOTED OTHERWISE) 12" .064	15" .064	18" .064	24" .064	30" .079	36" .079	42" .109	48" .109
9+31 -L-	R	1	OUT	770	766.2	766.2	X					16											
11+73 -L-	L	2		779.1																			
		2	3		776.3	775.3			64														
11+61 -L-	R	3		778.1																			
		3	1		774.6	766.2					240												
12+49 -L-	L	4		781.2																			
		4	5		778.9	778.4			16														
12+58 -L-	L	5		781.5																			
		5	2		778.4	776.3			80														
12+70 -L-	L	6		781.7																			
		6	5		778.9	778.4			8														
12+74 -L-	R	7B		782																			
		7B	7		779.8	779.2			4														
12+75 -L-	R	7		782.1																			
		7	3		779.1	775.1				112													
14+50 -L-	L	8		789.4																			
		8	9		786.7	785.9			12														
14+50 -L-	L	9		788.7			X																
		9	10		785.9	785.6			88														
14+49 -L-	R	10		788.6																			
		10	7		785.6	779.2			176														
15+93 -L-	L	11		798.5																			
		11	10		796.2	785.8			152														
2+18 RAMP D	R	13	OUT	803.7	801.2				24														
8+00 RAMP C	R	15	OUT	776.1	773					72													
3+12 RAMP C	R	16	EX	767.6	763.8					40													
1+50 RAMP C	R	16A		767																			
		16A	17A	767	760.8				24														
-0+98 RAMP C	R	17	EX	758.6	754.5					16													
1+24 RAMP C	R	17A		763.5																			
		17A	17		760.8	754.5			224														
SHEET TOTALS									872	240	240	16											

SIZE / THICKNESS OR GAUGE

STATION	STRUCTURE NO. FROM	TO	15" SIDE DRAIN PIPE	18" SIDE DRAIN PIPE	24" SIDE DRAIN PIPE	ENDWALLS STD. 838.01 OR STD. 838.11 (UNLESS NOTED OTHERWISE) CU. YARDS R.C.P.	C.S.P.	QUANTITIES FOR DRAINAGE STRUCTURES PER EACH (0' THRU 5.0')	*TOTAL L.F. FOR PAY QUANTITY SHALL BE COL. 'A' + (1.3 X COL.'B') LIN. FT. A 5.0' THRU 10.0'	B 10.0' AND ABOVE	C.B. STD. 840.01 OR STD. 840.02	FRAME, GRATES, AND HOOD STANDARD 840.03 TYPE OF GRATE E	F	G	D.I. STD. 840.14 OR STD. 840.15	D.I. FRAME AND GRATE STD. 840.16	M.D.I. TYPE "A" STD. 840.17 OR 840.26	M.D.I. TYPE "B" STD. 840.18 OR 840.27	M.D.I. TYPE "D" STD. 840.19 OR 840.28	M.D.I. FRAME WITH GRATE STD. 840.20	M.D.I. FRAME WITH TWO GRATES STD. 840.22	M.D.I. (N.S.) FRAME WITH GRATE STD. 840.24	M.D.I. (N.S.) FRAME WITH TWO GRATES STD. 840.24	J.B. STD. 840.31 OR 840.32	TRAFFIC BEARING J.B. STD. 840.34	MANHOLE STD. 840.51	M.H. STD. 840.51 OR 840.53	M.H. FRAME AND COVER STD. 840.54	BERM DRAINAGE OUTLET STD. 850.10	CONCRETE APRON FOR DI STD. 852.06	CORR. STEEL ELBOWS NO. & SIZE	CONC. COLLARS CL. "B" C.Y. STD. 840.72	CONC. & BRICK PIPE PLUG, C.Y. STD. 840.71	PIPE REMOVAL LIN. FT.	REMARKS
9+31 -L-	1	OUT						1			1			1																				15.63	CB
11+73 -L-	2							1			1		1																						CB
11+61 -L-	3							1			1			1																			0.116		CB
12+49 -L-	4							1							1	1																			DI
12+58 -L-	5							1			1		1																				0.065	176.65	CB
12+70 -L-	6							1			1		1																						CB
12+74 -L-	7B							1							1	1																			DI
12+75 -L-	7							1			1			1																				44.86	CB
14+50 -L-	8							1							1	1																			DI
14+50 -L-	9							1			1		1																						CB
14+49 -L-	10							1			1			1																					CB
15+93 -L-	11							1								1														1					DI IN RAISED MONOLITHIC ISLAND
2+18 RAMP D	13	OUT						1			1			1																					CB
8+00 RAMP C	15	OUT						1										1			1														2GI
3+12 RAMP C	16	EX						1			1									1												0.4465			EGI
1+50 RAMP C	16A																												1						BDO
-0+98 RAMP C	17	EX						1			1									1												0.4465			EGI
1+24 RAMP C	17A							1			1									1															EGI
SHEET TOTALS								17			12		4	5	3	4		1		3	1								1	1		0.9	0.181	237.14	

ABBREVIATIONS

C.B.	CATCH BASIN
N.D.I.	NARROW DROP INLET
D.I.	DROP INLET
M.D.I.	MEDIAN DROP INLET
M.D.I.(N.S.)	MEDIAN DROP INLET (NARROW SLOT)
J.B.	JUNCTION BOX
M.H.	MANHOLE
T.B.D.I.	TRAFFIC BEARING DROP INLET
T.B.J.B.	TRAFFIC BEARING JUNCTION BOX

16

D9CAD206385

COMPUTED BY: BLC DATE: 8/6/2004

CHECKED BY: EEA DATE: 8/6/2004

STATE OF NORTH CAROLINA
DIVISION OF HIGHWAYS

PROJECT NO.	SHEET NO.
I-2102	3-B

LIST OF PIPES, ENDWALLS, ETC. (FOR PIPES 48" & UNDER)

STATION	LOCATION (LT., RT. OR CL)'	STRUCTURE NO. FROM	STRUCTURE NO. TO	TOP ELEVATION	INVERT ELEVATION	INVERT ELEVATION	SLOPE CRITICAL	CLASS III R.C. PIPE (UNLESS NOTED OTHERWISE) 12"	15"	18"	24"	30"	36"	42"	48"	BITUMINOUS COATED C.S. PIPE TYPE B (UNLESS NOTED OTHERWISE) 12"	15"	18"	24"	30"		36"		42"		48"	
SIZE																											
THICKNESS OR GAUGE																.064	.084	.064	.064	.079		.079		.109		.109	
4+08 RAMP A	L	19	OUT	807	804.16				24																		
26+49 -L-	R	20		804.1			X																				
		20	21		801.3	800.3			232																		
28+80 -L-	R	21		803.1			X																				
		21	23		800.3	800.1			8																		
28+88 -L-	R	23		803.1																							
		23	24		800.1	796			144																		
30+28 -L-	R	24	OUT	804.2	798	791.6				120																	
28+86 -L-	L	25	OUT	803.2	800.4	797.4			48																		
31+52 -L-	L	26		808.2																							
		26	25		805.3	800.4			272																		
31+50 -L-	L	26A		808.8																							
		26A	26		806.5	805.4			12																		
35+58 -L-	L	27		828.5																							
		27	28		826.3	825.8			12																		
35+60 -L-	L	28		828.6																							
		28	26		825.8	805.4			408																		
5+39 RAMP B	R	29		780.2																							
		29	30		774.1	770.6						120															
4+36 RAMP B	L	30		775.9																							
		30	31		770.6	767.8						32															
15+01 -Y1-	R	31	OUT	772.3	767.8	767.3							56														
4+45 RAMP B	R	EX	30			770.6				40																	
12+05 -Y1-	R	32		768.2	763.6					4																	
21+25 -I40-	L	33	37	767.2	764.2	763.7				120																	
17+25 -I40-	L	34	35	758.5	755.5	754.8				120																	
16+10 -I40-	L	35		759	754.8																						
14+51 -I40-	L	36	OUT														56										
20+10 -I40-	L	37		768	763.7																						
SHEET TOTALS									1160	404		152	56				56										

STATION	15" SIDE DRAIN PIPE	18" SIDE DRAIN PIPE	24" SIDE DRAIN PIPE	ENDWALLS STD. 838.01 OR STD. 838.11 (UNLESS NOTED OTHERWISE) CU. YARDS R.C.P.	C.S.P.	QUANTITIES FOR DRAINAGE STRUCTURES *TOTAL L.F. FOR PAY QUANTITY SHALL BE COL. 'A' + (1.3 X COL.'B') PER EACH (0' THRU 5.0')	LIN. FT. A 5.0' THRU 10.0'	B 10.0' AND ABOVE	C.B. STD. 840.01 OR STD. 840.02	FRAME, GRATES, AND HOOD STANDARD 840.03 TYPE OF GRATE E	F	G	D.I. STD. 840.14 OR STD. 840.15	D.I. FRAME AND GRATE STD. 840.16	M.D.I. TYPE "A" STD. 840.17 OR 840.26	M.D.I. TYPE "B" STD. 840.18 OR 840.27	M.D.I. TYPE "D" STD. 840.19 OR 840.28	M.D.I. FRAME WITH GRATE STD. 840.20	M.D.I. FRAME WITH TWO GRATES STD. 840.22	M.D.I. (N.S.) FRAME WITH GRATE STD. 840.24	M.D.I. (N.S.) FRAME WITH TWO GRATES STD. 840.24	J.B. STD. 840.31 OR 840.32	TRAFFIC BEARING J.B. STD. 840.34	MANHOLE STD. 840.51	M.H. STD. 840.51 OR 840.53	M.H. FRAME AND COVER STD. 840.54	BERM DRAINAGE OUTLET STD. 850.10	CONCRETE APRON FOR DI STD. 852.06	CORR. STEEL ELBOWS NO. & SIZE	CONC. COLLARS CL. "B" C.Y. STD. 840.72	CONC. & BRICK PIPE PLUG, C.Y. STD. 840.71	PIPE REMOVAL LIN. FT.	REMARKS
4+08 RAMP A						1			1		1																								CB
26+49 -L-						1			1		1																							104.63	CB
28+80 -L-						1			1	1																									CB
28+88 -L-						1			1	1																								39.37	CB
30+28 -L-						1	1.4		1			1																							CB
28+86 -L-						1			1	1																									CB
31+52 -L-						1			1		1																							106.6	CB
31+50 -L-						1							1	1																					DI
35+58 -L-						1							1	1																					DI
35+60 -L-						1			1		1																							316.02	CB
5+39 RAMP B						1	1.1								1		1																	141.56	2GI
4+36 RAMP B						1	0.3								1		1																		2GI
15+01 -Y1-						1									1		1																		2GI
4+45 RAMP B																																	0.4465	8.72	
12+05 -Y1-						1									1		1																0.4465		2GI
21+25 -I40-						1									1		1																		2GI
17+25 -I40-						1									1		1																		2GI
16+10 -I40-						1														1															CONVERT TO TBJB
14+51 -I40-																								1								2@15"			BDO
20+10 -I40-						1														1															CONVERT TO TBJB
SHEET TOTALS						18	2.8		8	3	4	1	2	2	6		6			2				1							2		0.893	716.9	

ABBREVIATIONS

C.B.	CATCH BASIN
N.D.I.	NARROW DROP INLET
D.I.	DROP INLET
M.D.I.	MEDIAN DROP INLET
M.D.I.(N.S.)	MEDIAN DROP INLET (NARROW SLOT)
J.B.	JUNCTION BOX
M.H.	MANHOLE
T.B.D.I.	TRAFFIC BEARING DROP INLET
T.B.J.B.	TRAFFIC BEARING JUNCTION BOX

D9CAD212285,8/17/2004,R:\Drainage_summaries3.xls

D9CAD206385

COMPUTED BY: BLC	DATE: 8/6/2004
CHECKED BY: EEA	DATE: 8/6/2004

STATE OF NORTH CAROLINA
DIVISION OF HIGHWAYS

PROJECT NO.	SHEET NO.
I-2102	3-C

LIST OF PIPES, ENDWALLS, ETC. (FOR PIPES 48" & UNDER)

STATION	LOCATION (LT, RT, OR CL)	STRUCTURE NO. FROM	STRUCTURE NO. TO	TOP ELEVATION	INVERT ELEVATION	INVERT ELEVATION	SLOPE CRITICAL	CLASS III R.C. PIPE 12"	15"	18"	24"	30"	36"	42"	48"	BITUMINOUS COATED C.S. PIPE TYPE B 12" .064	15" .064	18" .064	24" .064	30" .079	36" .079	42" .109	48" .109	15" SIDE DRAIN PIPE	18" SIDE DRAIN PIPE	24" SIDE DRAIN PIPE	ENDWALLS CU. YARDS R.C.P.	C.S.P.	PER EACH (0' THRU 5.0')	A 5.0' THRU 10.0'	B 10.0' AND ABOVE	C.B. STD. 840.01 OR STD. 840.02	E	F	G	D.I. STD. 840.14 OR STD. 840.15	D.I. FRAME AND GRATE STD. 840.16	M.D.I. TYPE "A" STD. 840.17 OR 840.26	M.D.I. TYPE "B" STD. 840.18 OR 840.27	M.D.I. TYPE "D" STD. 840.19 OR 840.28	M.D.I. FRAME WITH GRATE STD. 840.20	M.D.I. FRAME WITH TWO GRATES STD. 840.22	M.D.I. (N.S.) FRAME WITH GRATE STD. 840.24	M.D.I. (N.S.) FRAME WITH TWO GRATES STD. 840.24	J.B. STD. 840.31 OR 840.32	TRAFFIC BEARING J.B. STD. 840.34	MANHOLE STD. 840.51	M.H. STD. 840.51 OR 840.53	M.H. FRAME AND COVER STD. 840.54	BERM DRAINAGE OUTLET STD. 850.10	CONCRETE APRON FOR DI STD. 852.06	CORR. STEEL ELBOWS NO. & SIZE	CONC. COLLARS CL. "B" C.Y. STD. 840.72	CONC. & BRICK PIPE PLUG, C.Y. STD. 840.71	PIPE REMOVAL LIN. FT.	REMARKS
29+19 -I40-	R	38		779.6																									1										1			1														CONVERT OTCB TO 2GI
32+21 -I40-	R	39		781.6																									1										1			1														CONVERT OTCB TO 2GI
31+87 -I40-	L	40		781.2																									1										1			1														CONVERT OTCB TO 2GI
24+76 -Y1-	L			790.27						121																																													84	
SHEET 3C TOTAL										121																			3										3			3													84	
SHEET 3B TOTAL									1160	404		152	56				56												18	2.8		8	3	4	1	2	2		6			6				2				1		2		0.893	716.9	
SHEET 3A TOTAL									872	240	240	16																	17			12		4	5	3	4		1		3	1								1	1		0.893	0.181	237.1	
GRAND TOTALS									2032	765	240	168	56				56												38	2.8		20	3	8	6	5	6		10		3	10				2				2	1	2	0.893	1.074	1038.0	

ENDWALLS: STD. 838.01 OR STD. 838.11 (UNLESS NOTED OTHERWISE)

QUANTITIES FOR DRAINAGE STRUCTURES: *TOTAL L.F. FOR PAY QUANTITY SHALL BE COL. 'A' + (1.3 X COL.'B')

FRAME, GRATES, AND HOOD STANDARD 840.03 — TYPE OF GRATE

ABBREVIATIONS

C.B.	CATCH BASIN
N.D.I.	NARROW DROP INLET
D.I.	DROP INLET
M.D.I.	MEDIAN DROP INLET
M.D.I.(N.S.)	MEDIAN DROP INLET (NARROW SLOT)
J.B.	JUNCTION BOX
M.H.	MANHOLE
T.B.D.I.	TRAFFIC BEARING DROP INLET
T.B.J.B.	TRAFFIC BEARING JUNCTION BOX

CHECKED BY: EEA DATE 3/6/2006

D9CADSRV

STATE OF NORTH CAROLINA
DIVISION OF HIGHWAYS

SUMMARY OF EARTHWORK

Station	Station	Uncl. Excav.	Embank. + %	Borrow	Waste
L 10+00	L 36+50	840	12406	11734	168
Rev A 1+00	Rev A 3+50	207	56	-	151
Rev B 0+50	Rev B 13+00	2251	3560	1760	450
Rev C 0+50	Rev C 16+00	13035	12947	2519	2607
Rev D 0+50	Rev D 3+00	234	458	271	47
Y1 10+00	Y1 28+00	6902	9950	4428	1380
Y2 10+00	Y2 11+00	108	12	-	96
Y4 ltep 12+00	Y4 ltep 23+00	15957	-	-	15957
Y4 rtep 12+50	Y4 rtep 17+00	5738	34	-	5704
L 18+99.59	L 22+38.69			-	
SUBTOTALS:		45272	39424	20712	26560
Loss due to clearing and grubbing		-2264		2264	
Waste to replace Borrow				-17506	-17506
5% Est. to replace Topsoil				274	
GRAND TOTALS:		43008		5744	9054
SAY:		43100		5800	9060

Approximate quantities only. Unclassified excavation, borrow excavation, fine grading, clearing and grubbing, breaking of existing pavement and removal of existing pavement will be paid for at the lump sum price for "Grading".

SUMMARY OF EXISTING ASPHALT PAVEMENT REMOVAL

LINE	Station	Station	LOC LT/RT/CL	YD^2
RPB	2+19.75	4+21.55	RT	202.64
RPB	3+41.65	5+22.96	LT	200.8
RPB	4+28.63	7+70.32	LT/RT/CL	566.33
RPB	7+02.74	12+60.18	RT	1118.75
RPB	12+60.18	13+64.70	RT/LT	574.4
RPC DETOUR	0+00.00	3+40.88	LT/RT/CL	1520.85
Y2	10+63.82	11+38.20	RT	51.81
Y4	11+62.00	40.40.08	RT	3523.41
Y4	12+21.48	42+80.00	LT	3752.13
			TOTAL:	11511.12
			SAY:	11511

SUMMARY OF EXISTING ASPHALT PAVEMENT BREAKUP

LINE	Station	Station	LOC LT/RT/CL	YD^2
L	14+00.00	18+99.59	LT/RT/CL	2630.47
L	22+38.00	23+50.00	RT	267.85
			TOTAL:	2898.32
			SAY:	2898

"N" = DISTANCE FROM EDGE OF LANE TO FACE OF GUARDRAIL
TOTAL SHOULDER WIDTH = DISTANCE FROM EDGE OF TRAVEL LANE TO SHOULDER BREAK POINT.
FLARE LENGTH = DISTANCE FROM LAST SECTION OF PARALLEL GUARDRAIL TO END OF GUARDRAIL.
W = TOTAL
WIDTH OF
NG = NON-GATING IMPACT ATTENUATOR TYPE 350

GUARDRAIL SUMMARY

LINE	BEG. STA.	END STA.	LOC.	LENGTH			WARRANT POINT		"N" DIST FROM E.O.L.	TOTAL SHLDR WIDTH	FLAIR LENGTH		W		ANCHORS							IMP. ATTEN. TYPE 350			REMOVE EXISTING GRDRAIL		REMARKS
				STRAIGHT	SHOP CURVED	TEMPORARY	APPR. END	TRAIL. END			APPR. END	TRAIL. END	APPR. END	TRAIL. END	III	XI	GRAU 350	M-350	AT-1	CAT-1	VI MOD	EA	G	NG			
RP D -L-	2+00	19.25.46	RT	113.44	39.85		2+00	19.25.46	2.5	6.5	0	0	0	0	1				1								
-L- RP B	22+14.36	23+47.36	LT	133			22+14.36	23+47.36	2.5	6.5	0	0	0	0	1		1										
-RP B- -Y4-	3+53.93	22+59.62	LT	494.92			-RP B- 2+25	-Y4- 22+60	8	10	50	0	1	0			1			1							
-Y3-	1+21.12	12+72.46	LT	1151.34			2+50	11+50	6	6	50	50	1	1			2										
-Y4-	33+17.11	38+96.26	LT	579.15			N/A	N/A																	580		
-L-	17+37.17	18+74.04	LT	136			17+37.17	18+74.04							1					1							
-Y4-	33+17.11	38+96.26	RT	579.15			N/A	N/A																	580		
-L-	18+05	19+48	LT			143										1	1										TEMPORARY GUARDRAIL
-L-	22+10	23+15	LT			105										1	1										TEMPORARY GUARDRAIL
SUBTOTALS				3187	39.85	248									3	2	6		1	2					1160		
LESS ANCHOR DEDUCTIONS		GRAU 350	6 @ 50.00	200.00		100.00																					
		CAT-1	2 @ 6.25	12.50																							
		TYPE III	3 @ 18.75	56.25																							
		TYPE XI Mod.	2 @ 25.00			50																					
		AT-1	1 @ 6.25	6.25																							
TOTAL DEDUCTIONS				275.00		150.00																					
TOTAL GUARDRAIL				2912.00	39.85	98.00																					
SAY				**2925**	**50**	**100**									**3**	**2**	**6**		**1**	**1**					**1160**		
ADDITIONAL GUARDRAIL POSTS = 5 EA																											

10/26/98

COMPUTED BY: TCF DATE: 7/12/2004
CHECKED BY: EEA DATE: 7/12/2004

PROJECT REFERENCE NO.	SHEET NO.
I-2102	3-E

STATE OF NORTH CAROLINA
DIVISION OF HIGHWAYS

RIGHT OF WAY AREA DATA SHEET

PARCEL NO.	PROPERTY OWNERS NAME	TOTAL ACREAGE	AREA TAKEN	AREA REMAINING RIGHT	AREA REMAINING LEFT	CONSTR. EASEMENT	PERMANENT DRAINAGE EASEMENT	TEMPORARY DRAINAGE EASEMENT		PARCEL NO.	PROPERTY OWNERS NAME	TOTAL ACREAGE	AREA TAKEN	AREA REMAINING RIGHT	AREA REMAINING LEFT	CONSTR. EASEMENT	PERMANENT DRAINAGE EASEMENT	TEMPORARY DRAINAGE EASEMENT	
11	FUND VI, FUND VII AND FUND VIII ASSOCIATES	14.68 Ac	2,856.64 SF		14.61 Ac														
12A	DAVIE PROPERTIES, INC.	0.9757 Ac	0.0658 Ac		0.9099 Ac														
12B	DAVIE PROPERTIES, INC.	0.8578 Ac	0.0964 Ac		0.7614 Ac														
12C	DAVIE PROPERTIES, INC.	0.9797 Ac	0.3012 Ac		0.6785 Ac	2143.34 SF													
12D	DAVIE PROPERTIES, INC.	2.4996 Ac	0.3273 Ac		2.172 Ac														
13	RICHARD D. PHILLIPS & ELLEN S. PHILLIPS	1.30 Ac	648.32 SF	1.29 Ac															
14	SYLVIA F. SINCLAIR, ET AL	1.36 Ac	679.41 SF		1.34 Ac														
15	HARRIS CAPITAL GROUP, INC.	27,448 SF	2,463.94 SF		24,984.06 SF														
16	HICKORY GROVE A.M.E. ZION CHURCH	2.52 Ac	2,769.83 SF	2.46 Ac															
17	JOHN B. CRAVER	1.82 Ac	3,951.49 SF	1.73 Ac			2138.86 SF												
18	HARRIS ASSISTED LIVING PROPERTIES, LLC	5.47 Ac	0.19 Ac		5.28 Ac	483.07 SF													
19	PHOEBE L. LAMBETH & JEANETTE L. HIGGINS	4.94 Ac	0.14 Ac	4.80 Ac			497.74 SF												
20	R.G. RUSSELL & DOROTHY F. RUSSELL	1.20 Ac	2,362.30 SF	1.15 Ac															
21	CHARLES L. DUNN	2.38 Ac			2.38 Ac	800.98 SF													
22	SHAMROCK UNITED PROPERTIES, INC.	111.85 Ac	0.15 Ac		111.70 Ac														
23	ROBERT B. SUTTON, JR. & VICKIE S. SUTTON	1.13 Ac			1.13 Ac	1,180.96 SF													
24	VILLAGE OF TANGLEWOOD, LLC	10.15 Ac				405.54 SF	1659.78 SF												
25	TANGLEWOOD ENTERPRISES, INC.	1.00 Ac					359.77 SF	772.66 SF											
26	WESTRIDGE CONDOMINIUM OWNERS ASSOCIATION, INC.	14.57 Ac	3,185.91 SF	14.50 Ac		32,255.23 SF													

09-AUG-2004 11:43
R:\12102rw.dgn
pgeoill01

PROJ. REFERENCE NO.	SHEET NO.
I-2102	3-F

STATE OF NORTH CAROLINA
DIVISION OF HIGHWAYS

PARCEL INDEX SHEET

PARCEL No.	SHEET No.	PROPERTY OWNER NAME
11	4	FUND VI, FUND VII AND FUND VIII ASSOCIATES
12A	4	DAVIE PROPERTIES, INC.
12B	4	DAVIE PROPERTIES, INC.
12C	5	DAVIE PROPERTIES, INC.
12D	4	DAVIE PROPERTIES, INC.
13	5	RICHARD D. PHILLIPS AND WIFE ELLEN S. PHILLIPS
14	5	SYLVIA F. SINCLAIR AND EDWARD V. FERRELL AND JEAN F. LYBROOK AND ROSENA F. DILLARD
15	5	HARRIS CAPITOL GROUP, INC.
16	5	HICKORY GROVE A.M.E. ZION CHURCH
17	6	JOHN B. CRAVER
18	6	HARRIS ASSISTED LIVING PROPERTIES, LLC
19	6	PHOEBE L. LAMBETH AND JEANETTE L. HIGGINS
20	6	R.G. RUSSELL AND WIFE DOROTHY F. RUSSELL
21	6	CHARLES L. DUNN
22	7	SHAMROCK UNITED PROPERTIES, INC.
23	7	ROBERT B. SUTTON JR. AND WIFE VICKIE S. SUTTON
24	6	VILLAGE OF TANGLEWOOD, LLC
25	4	TANGLEWOOD ENTERPRISES INC.
26	7	WESTRIDGE CONDOMINUM OWNERS ASSOCIATION, INC.
27	4	HENRY BROWN CLODFELTER JR.
27A	4	HOME OWNERS ASSOCIATION

PARCEL No.	SHEET No.	PROPERTY OWNER NAME

PROJECT REFERENCE NO.	SHEET NO.
I-2102	4
R/W SHEET NO.	4
ROADWAY DESIGN ENGINEER	HYDRAULICS ENGINEER

NORTH CAROLINA PROFESSIONAL SEAL 27446 ENGINEER EVANE ANDREWS 8-16-04

NORTH CAROLINA PROFESSIONAL SEAL 12575 ENGINEER PAUL E. FISHER 8-31-04

Notes:
(1) SEE SHEET 10 FOR -L- PROFILE

DATUM DESCRIPTION

THE LOCALIZED COORDINATE SYSTEM DEVELOPED FOR THIS PROJECT IS BASED ON THE STATE PLANE COORDINATES ESTABLISHED BY NCGS FOR MONUMENT "GPS I-2102-1"
WITH NAD 83 STATE PLANE GRID COORDINATES OF
NORTHING: 828887.0620(ft) EASTING: 1582282.4340(ft)
THE AVERAGE COMBINED GRID FACTOR USED ON THIS PROJECT (GROUND TO GRID) IS: 0.99993054
THE N.C. LAMBERT GRID BEARING AND LOCALIZED HORIZONTAL GROUND DISTANCE FROM "GPS I-2102-1" TO -L- 8+90.00 STATION (supplied by roadway) IS
N 87° 01' 19" E 2194.04'
ALL LINEAR DIMENSIONS ARE LOCALIZED HORIZONTAL DISTANCES
VERTICAL DATUM USED IS NGVD 29

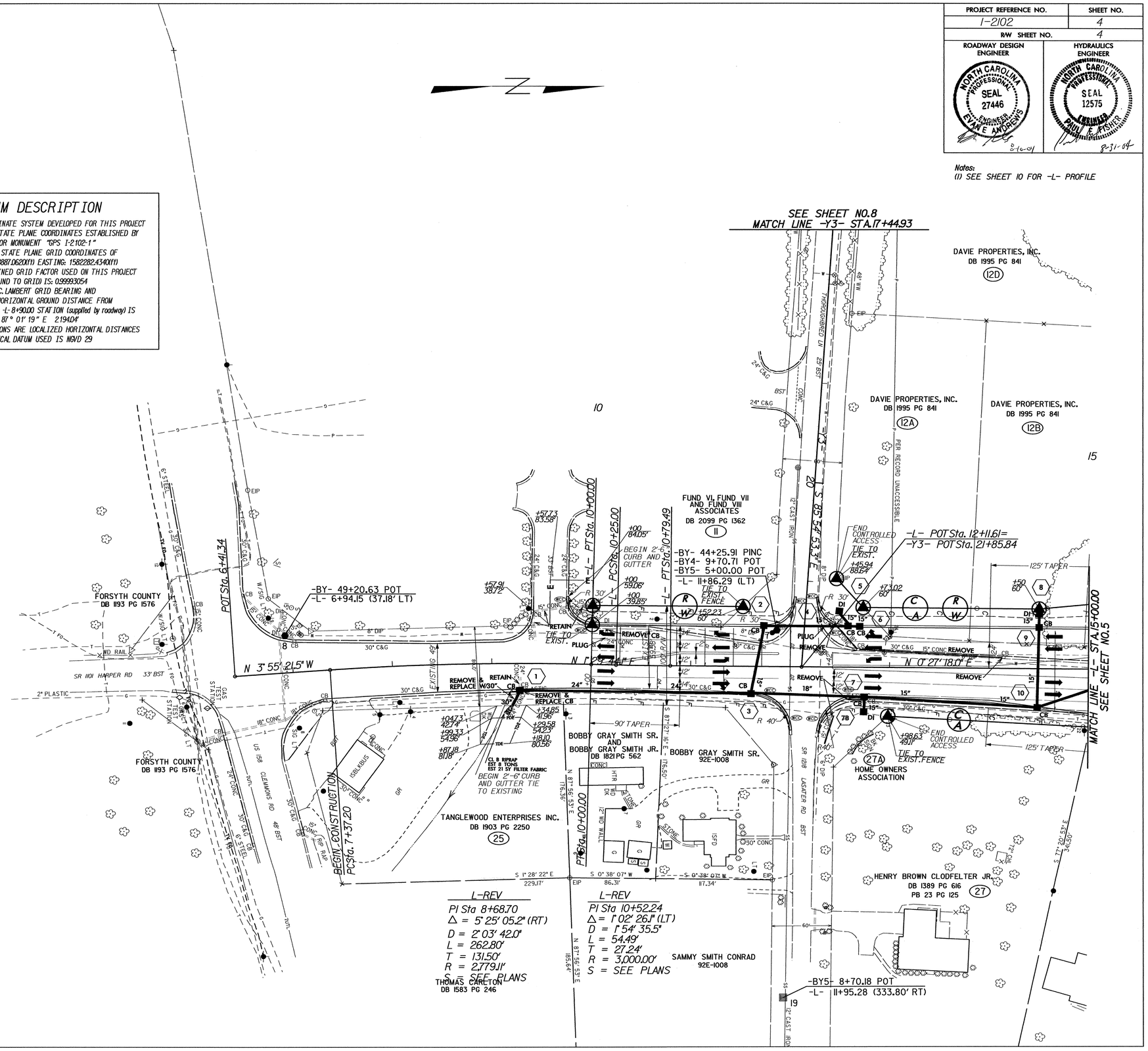

REVISIONS

8/17/99

10-AUG-2004 10:35
R:\ps4REV.psh
bjcaudill AT

PROJECT REFERENCE NO.	SHEET NO.
1-2102	5
R/W SHEET NO.	5
ROADWAY DESIGN ENGINEER	HYDRAULICS ENGINEER

NORTH CAROLINA PROFESSIONAL SEAL 27446 ENGINEER EVANE ANDREWS 2/24/06

NORTH CAROLINA PROFESSIONAL SEAL 019242 ENGINEER PAUL F. FISHER 3/2/06

8/17/99

REVISIONS

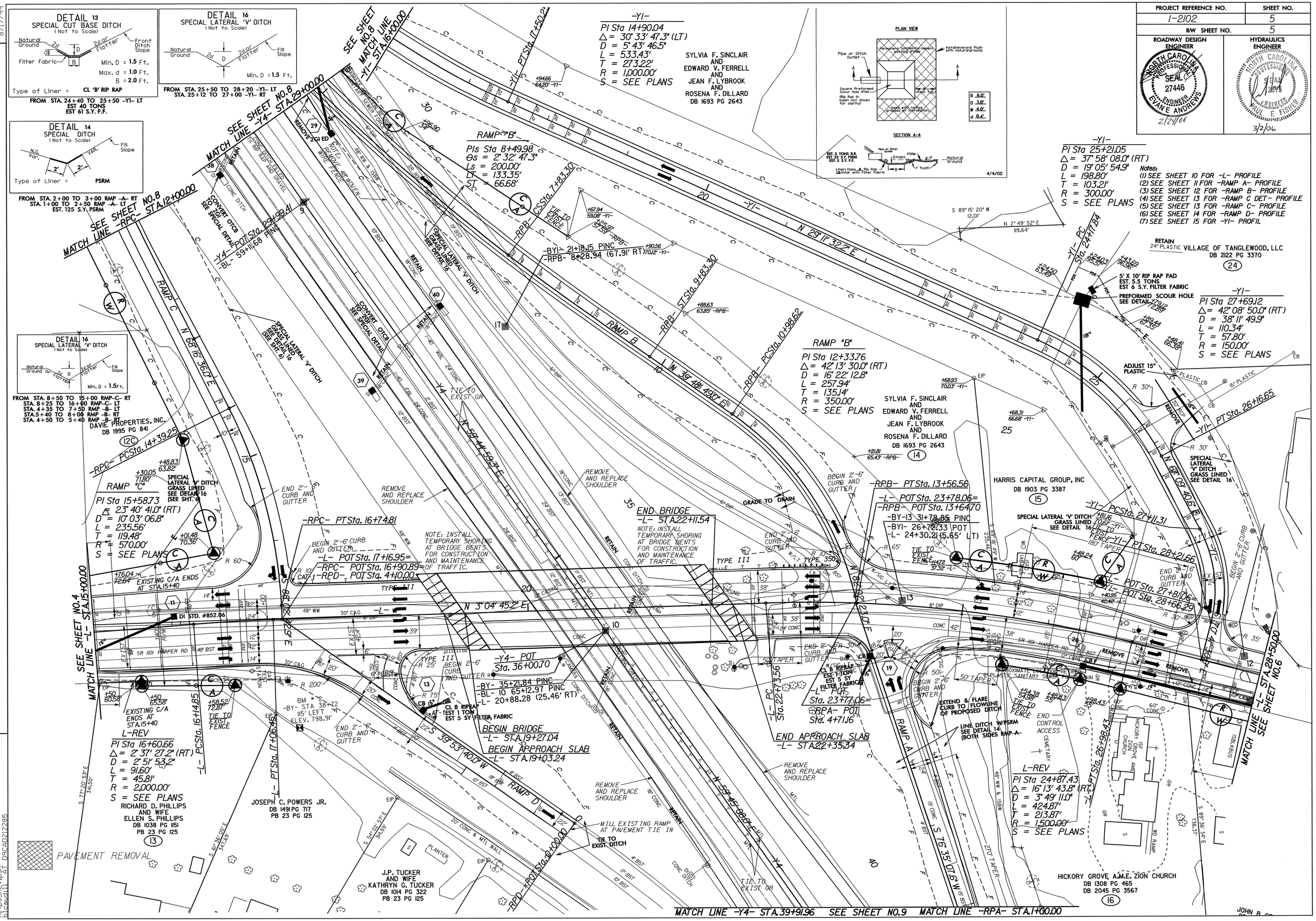

23-FEB-2006 16:06
R:\psSHEET.psh D9CAD212285

PROJECT REFERENCE NO.	SHEET NO.
1-2102	6
R/W SHEET NO.	6
ROADWAY DESIGN ENGINEER	HYDRAULICS ENGINEER

NORTH CAROLINA PROFESSIONAL SEAL 27446 ENGINEER EVAN E. AMPRENTIS 8-10-04

NORTH CAROLINA PROFESSIONAL SEAL 12575 ENGINEER PHILIP A. FISHER

NOTE:
(1) SEE SHEET 10 FOR -L- PROFILE

REVISIONS

8/17/99

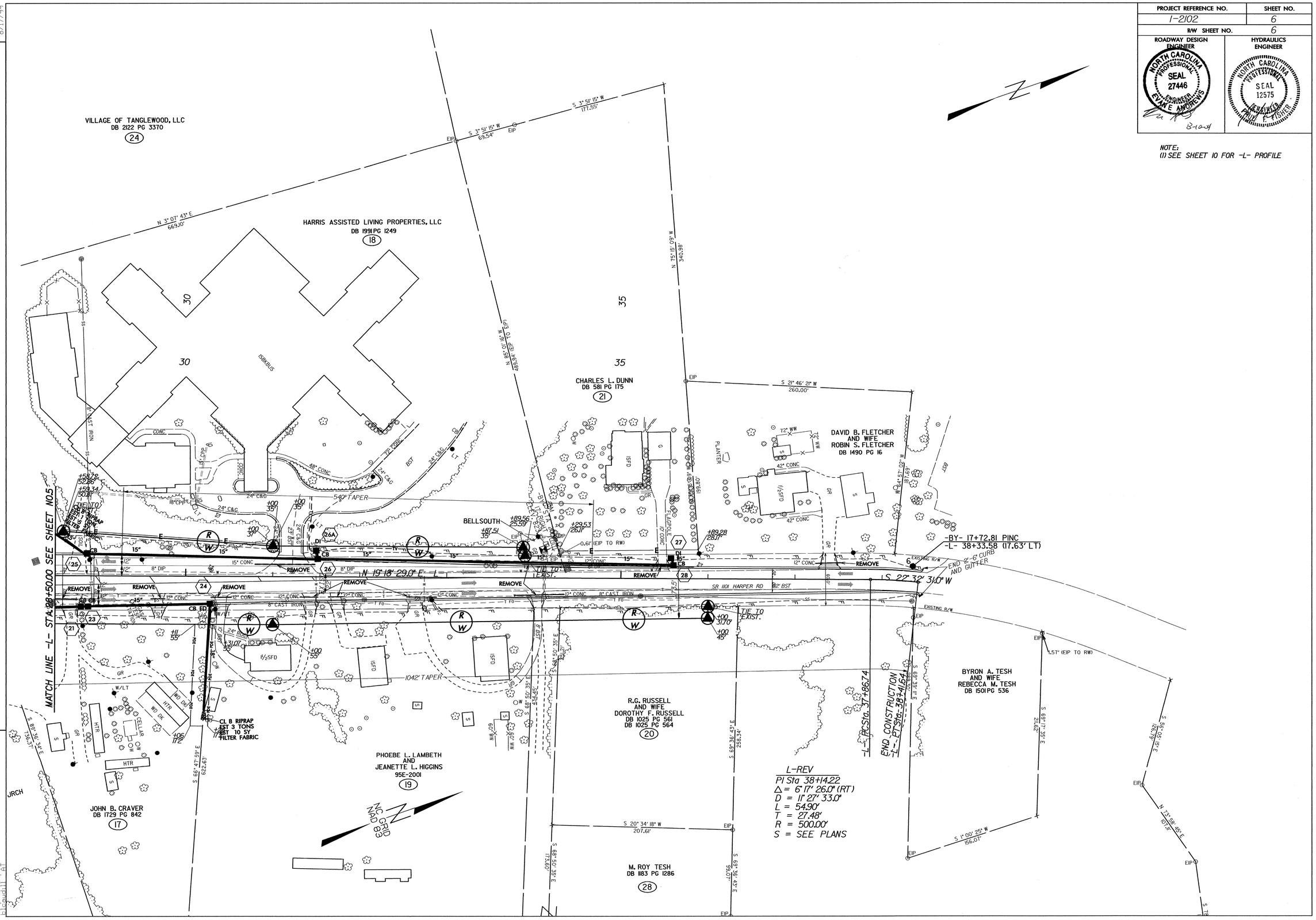

PROJECT REFERENCE NO.	SHEET NO.
1-2102	7
R/W SHEET NO.	7
ROADWAY DESIGN ENGINEER	HYDRAULICS ENGINEER
NORTH CAROLINA PROFESSIONAL SEAL 27446 ENGINEER EVANE ANDREWS 8-10-04	NORTH CAROLINA PROFESSIONAL SEAL 12575 ENGINEER PAUL E. FISHER 8-31-04

NOTE:
(1) SEE SHEET 13 FOR -RAMP C DETOUR- PROFILE
(2) SEE SHEET 13 FOR -RAMP C- PROFILE
(3) SEE SHEET 17 FOR -Y4- PROFILE

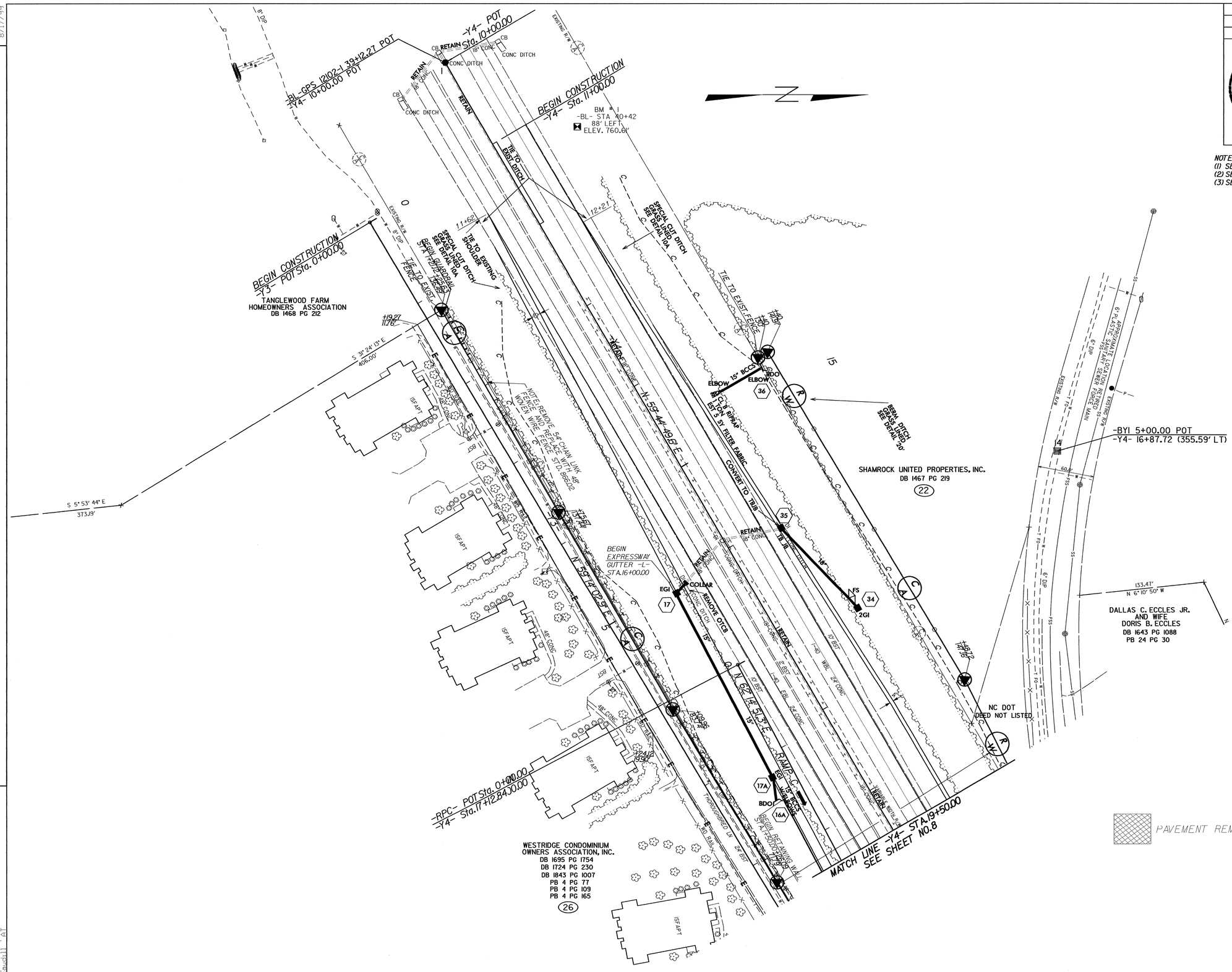

REVISIONS

8/17/99

10-AUG-2004 10:40
R:\ps\REV.psh
Sjacquil AT

PROJECT REFERENCE NO.	SHEET NO.
1-2102	8
R/W SHEET NO.	8

ROADWAY DESIGN ENGINEER — NORTH CAROLINA PROFESSIONAL SEAL 27446 ENGINEER EVANE ANDREWS — 8-10-04

HYDRAULICS ENGINEER — NORTH CAROLINA PROFESSIONAL SEAL 12575 ENGINEER PAUL E. FISHER — 8-31-04

Notes:
(1) SEE SHEET 12 FOR -RAMP B- PROFILE
(2) SEE SHEET 13 FOR -RAMP C DET- PROFILE
(3) SEE SHEET 13 FOR -RAMP C- PROFILE
(4) SEE SHEET 15 FOR -Y1- PROFILE
(5) SEE SHEET 16 FOR -Y2- PROFILE
(6) SEE SHEET 17 FOR -Y4- PROFILE

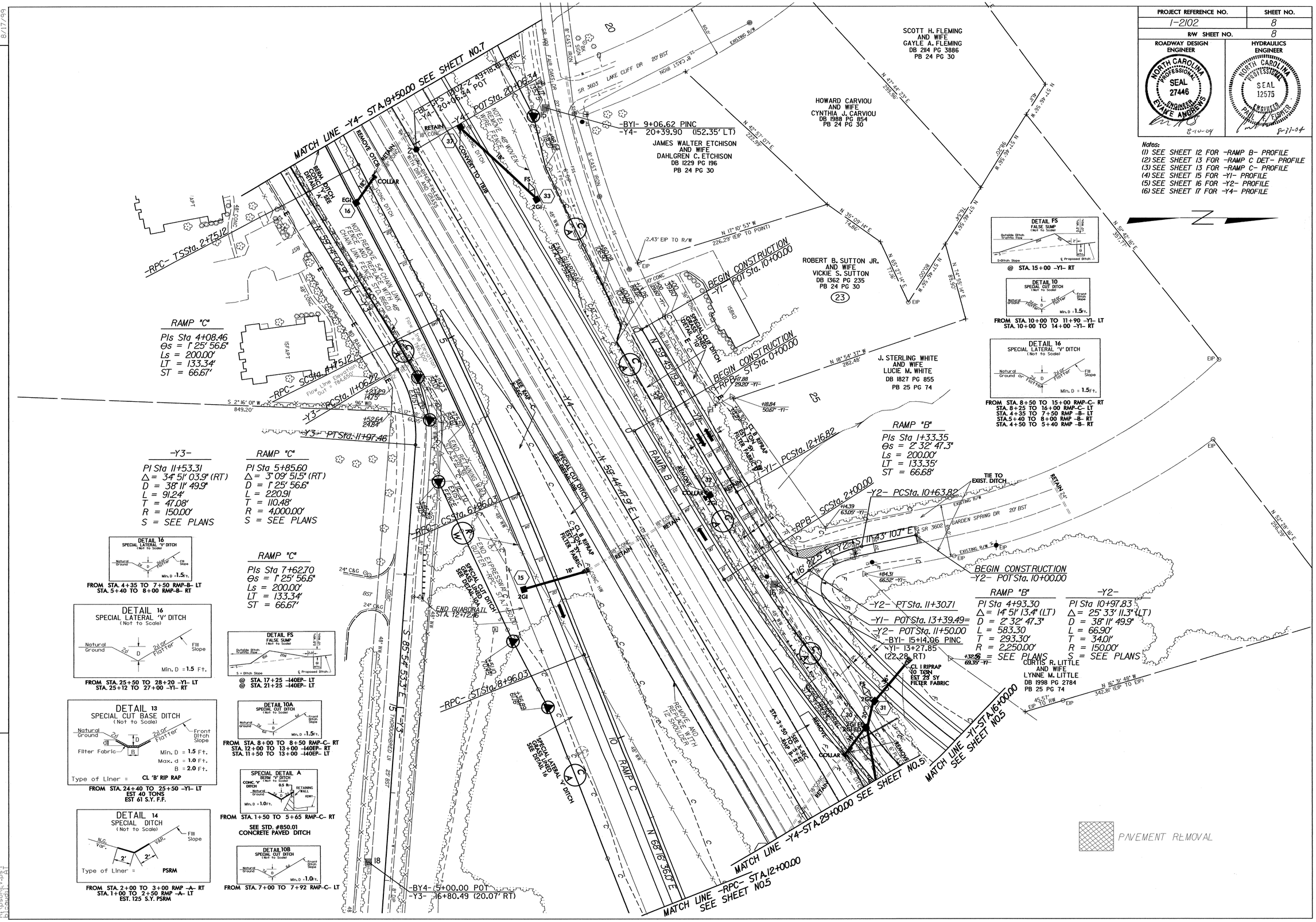

REVISIONS

8/17/99

10-AUG-2004 10:45
R:\psBREV.psf
R:\2102_01.dgn

PROJECT REFERENCE NO.	SHEET NO.
I-2102	9
R/W SHEET NO.	9

ROADWAY DESIGN ENGINEER
NORTH CAROLINA PROFESSIONAL SEAL 27446 ENGINEER EVANE ANDREWS
8-10-04

HYDRAULICS ENGINEER
NORTH CAROLINA PROFESSIONAL SEAL 12575 ENGINEER PAUL E. FISHER
8-31-04

Notes:
(1) SEE SHEET 11 FOR -RAMP -A- PROFILE
(2) SEE SHEET 18 FOR -Y4- PROFILE

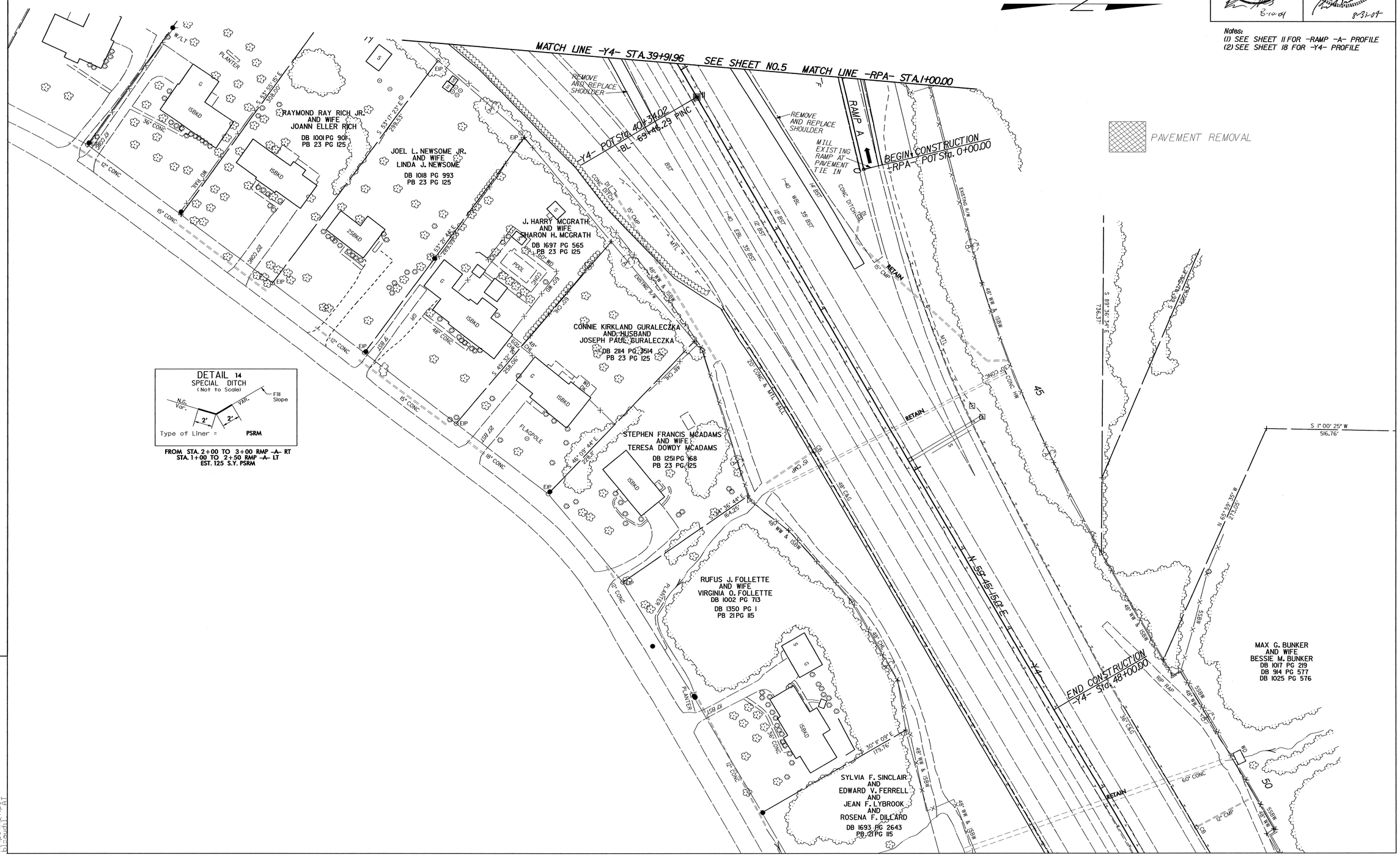

DETAIL 14
SPECIAL DITCH
(Not to Scale)

Type of Liner = PSRM

FROM STA. 2+00 TO 3+00 RMP -A- RT
STA. 1+00 TO 2+50 RMP -A- LT
EST. 125 S.Y. PSRM

REVISIONS

8/17/99

10-AUG-2004 10:50
R:\ps9REV.dgn
bicsudi AT

5/28/99

PROJECT REFERENCE NO.	SHEET NO.
I-2102	10

ROADWAY DESIGN ENGINEER — NORTH CAROLINA PROFESSIONAL SEAL 27446 ENGINEER ELVIN E. ANDREWS — 8-10-04

HYDRAULICS ENGINEER — NORTH CAROLINA PROFESSIONAL SEAL 12575 ENGINEER PAUL E. LEWIS — 8-31-04

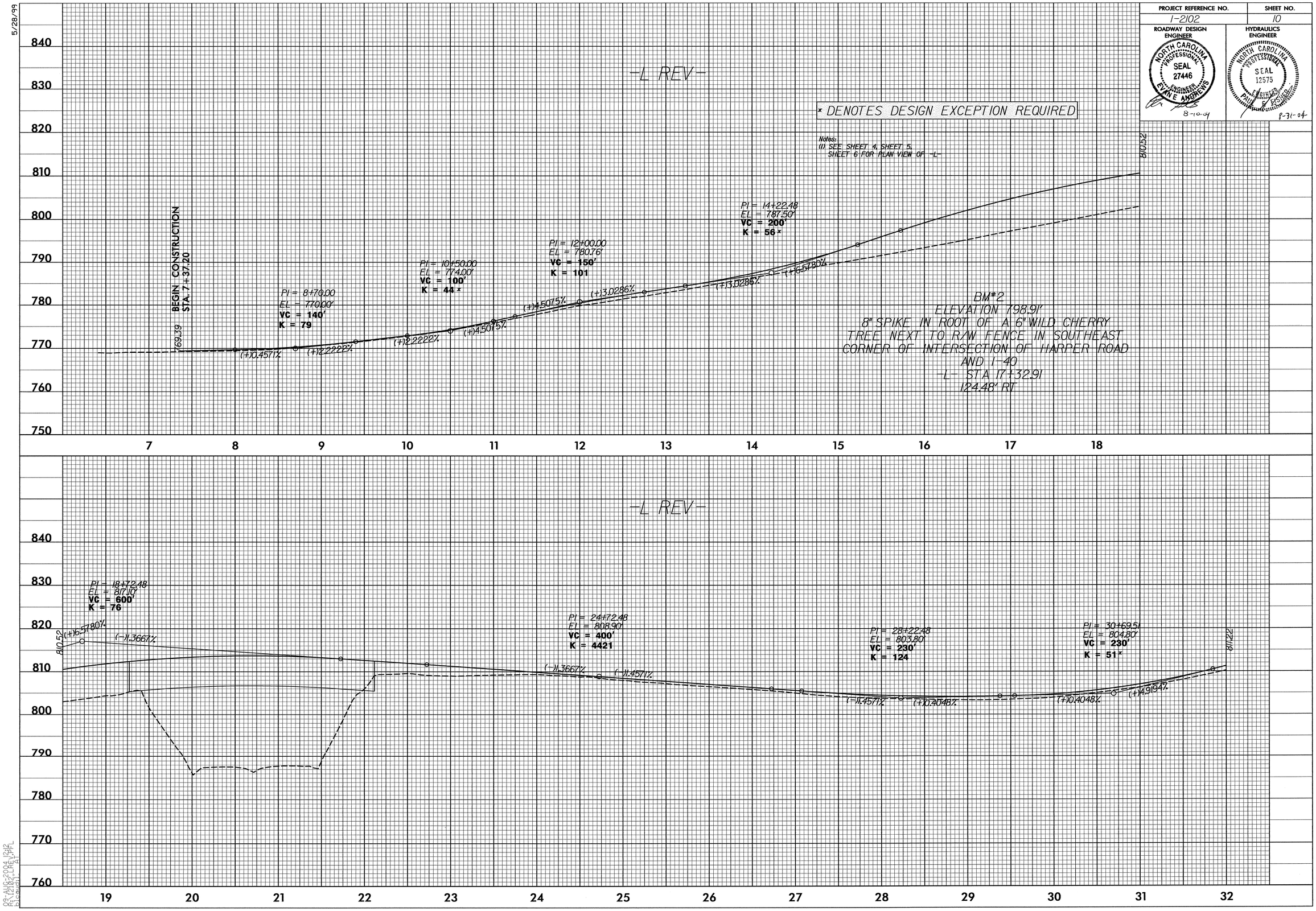

09-AUG-2004 12:12
R:\2102_FINAL.PFL
Layout: FINAL

5/28/99

PROJECT REFERENCE NO.	SHEET NO.
12102	11

ROADWAY DESIGN ENGINEER

NORTH CAROLINA PROFESSIONAL SEAL 27446 ENGINEER ELAINE ANDREWS

8-10-04

HYDRAULICS ENGINEER

NORTH CAROLINA PROFESSIONAL SEAL 12575 ENGINEER PAUL E. FISHER

8-31-04

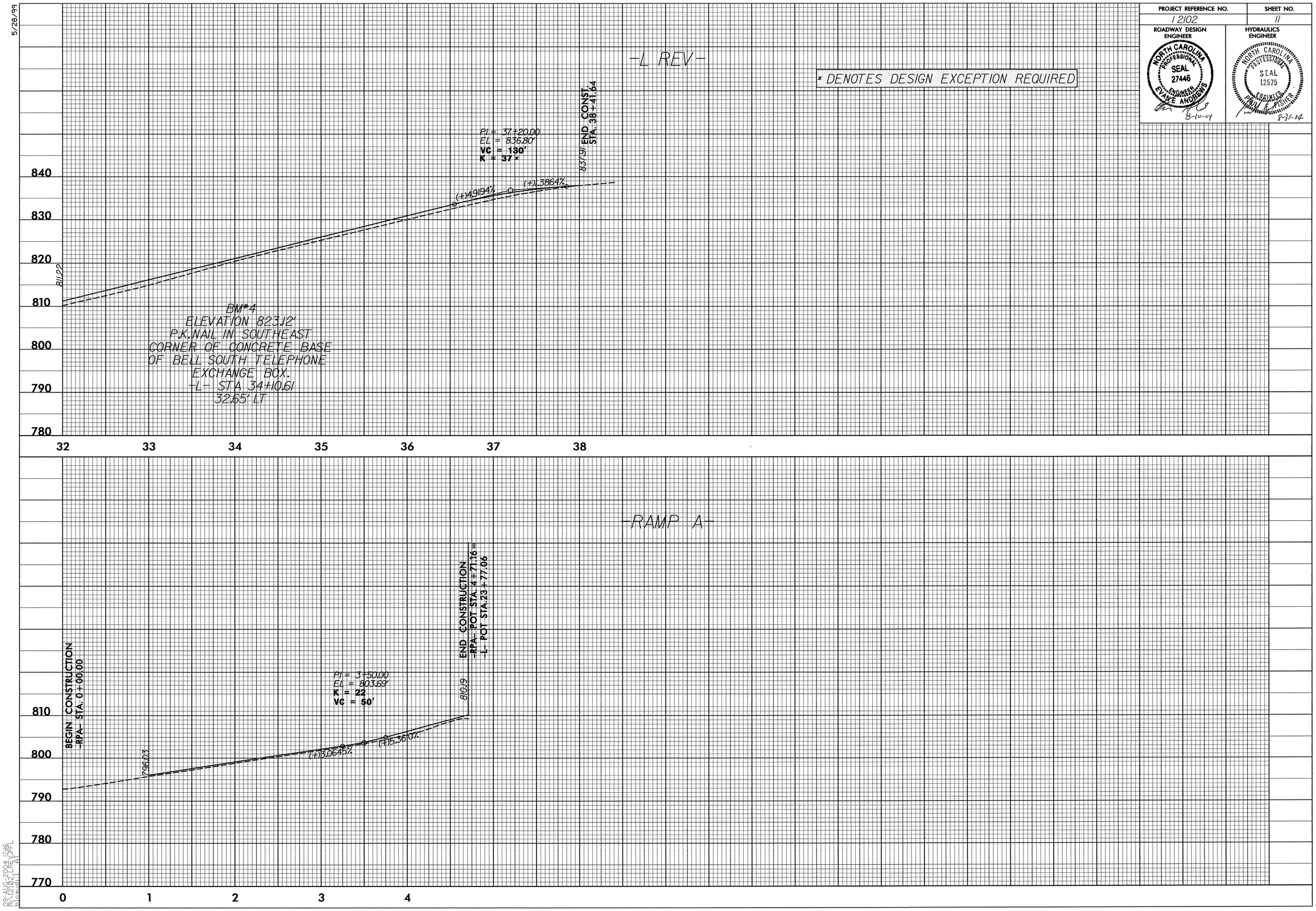

09-AUG-2004 13:16
R:\12102_FL\12102_FL

PROJECT REFERENCE NO.	SHEET NO.
1-2102	12

ROADWAY DESIGN ENGINEER

NORTH CAROLINA PROFESSIONAL SEAL 27446 ENGINEER ELAINE ANGBELWS

8-1-01

HYDRAULICS ENGINEER

NORTH CAROLINA PROFESSIONAL SEAL 12575 ENGINEER PAUL E. FISHER

8-31-01

Notes:
(1) SEE SHEET 5, SHEET 8, FOR PLAN VIEW OF -RAMP B-

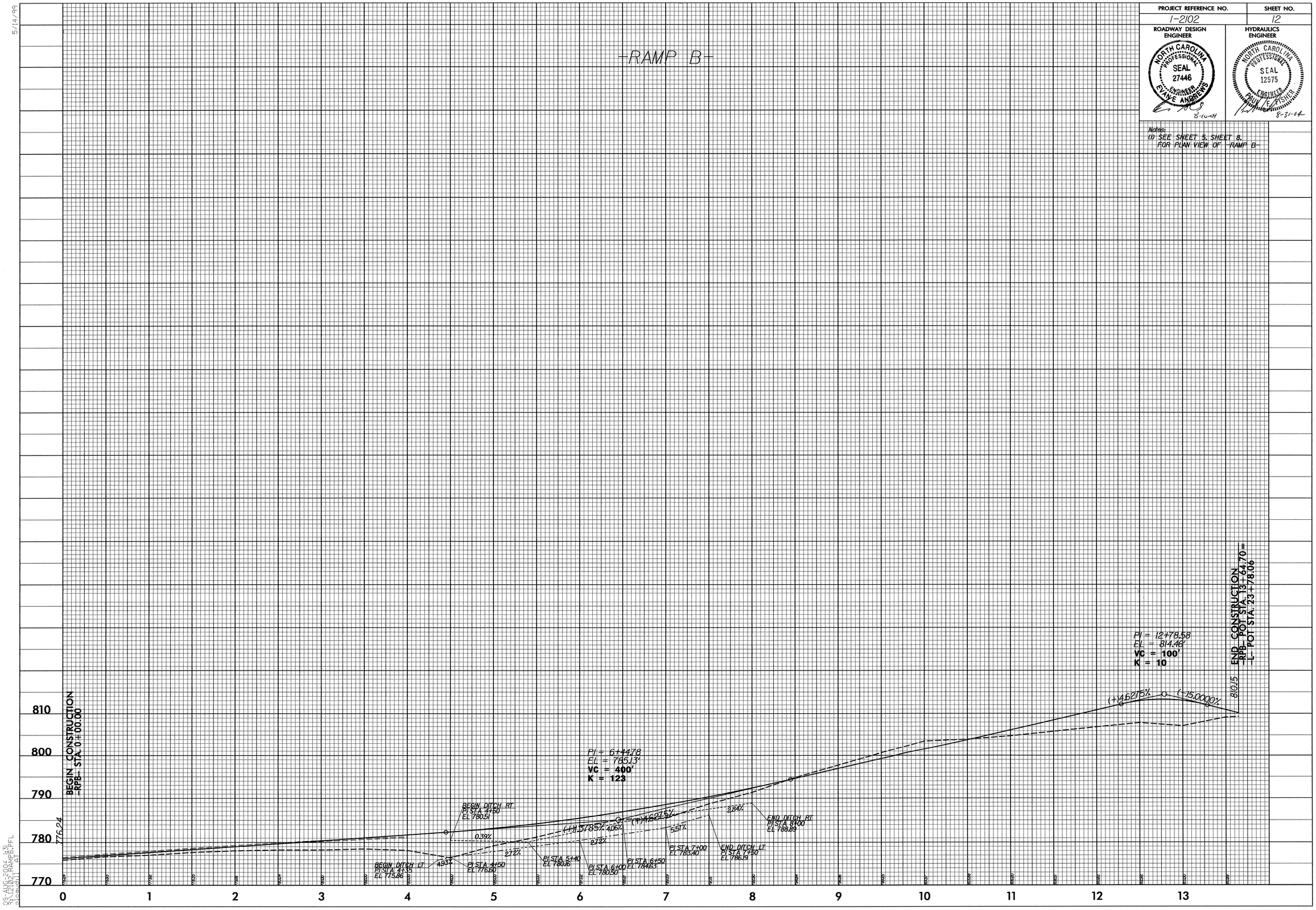

5/14/99

98-AUG-2004 13:12:02
S:\Proj\1-2102_RAMPB.PFL
Output: A1

5/28/99

PROJECT REFERENCE NO.	SHEET NO.
I-2102	13

ROADWAY DESIGN ENGINEER

NORTH CAROLINA PROFESSIONAL SEAL 27446 ENGINEER ELAINE ANDREWS

8-10-04

HYDRAULICS ENGINEER

NORTH CAROLINA PROFESSIONAL SEAL 12575 ENGINEER PAUL R. LEGISTER

8-31-04

-RAMP C-

Notes:
(1) SEE SHEET 5, SHEET 7, SHEET 8, FOR PLAN VIEW OF -RAMP C-

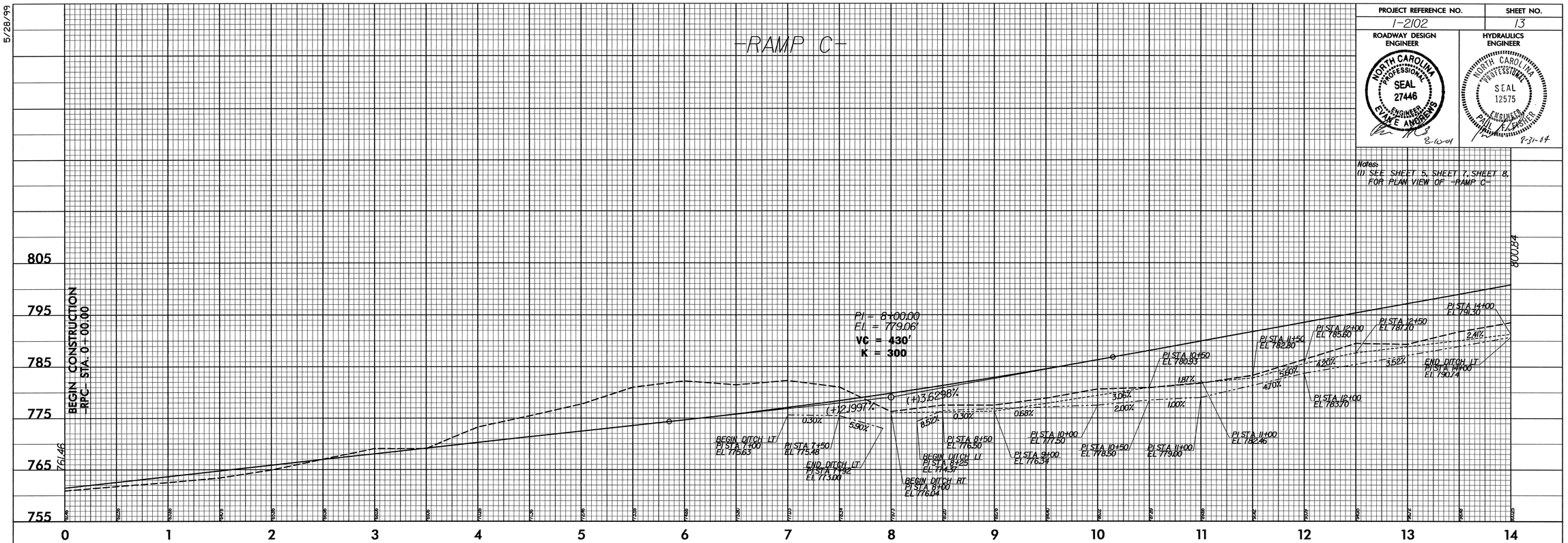

-RAMP C DETOUR-

Notes:
(1) SEE SHEET 5, FOR PLAN VIEW OF -RAMP C DETOUR-

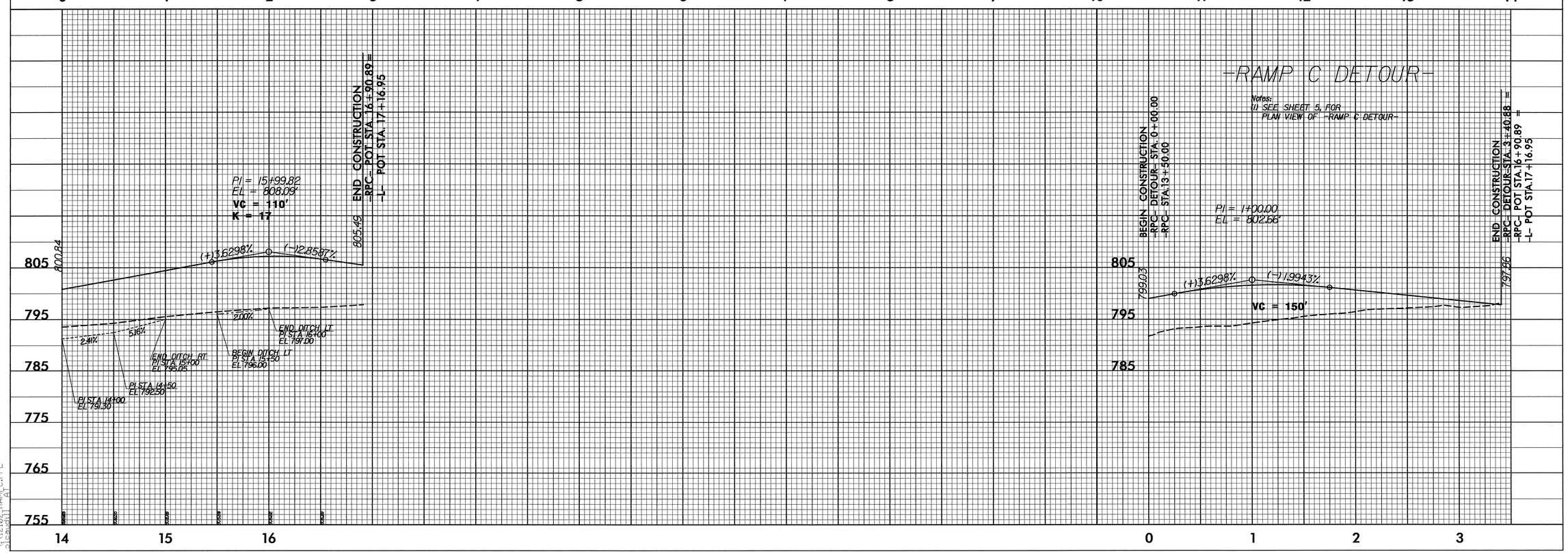

93-AUG-2004 1:36
3:\2102\RAMPC.PFL
3:\cs\311 41

5/14/99

PROJECT REFERENCE NO.	SHEET NO.
I-2102	14

ROADWAY DESIGN ENGINEER

NORTH CAROLINA PROFESSIONAL SEAL 27446 ENGINEER EVANE ANDREWS

8-10-04

HYDRAULICS ENGINEER

NORTH CAROLINA PROFESSIONAL SEAL 12575 ENGINEER PAUL E. PASTER

8-27-04

Notes:
(1) SEE SHEET 5, FOR PLAN VIEW OF -RAMP D-

-RAMP D-

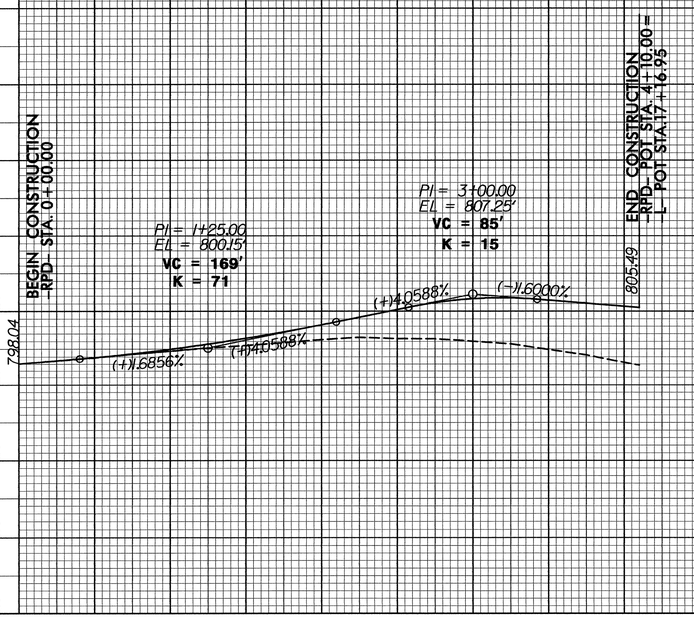

09-AUG-2004 11:39
R:\I2102_RAMPD.PFL
pjcsquill A1

5/28/99

PROJECT REFERENCE NO.	SHEET NO.
I-2102	15

ROADWAY DESIGN ENGINEER

NORTH CAROLINA PROFESSIONAL SEAL 27446 ENGINEER EVANE ANDREWS

8-10-04

HYDRAULICS ENGINEER

NORTH CAROLINA PROFESSIONAL SEAL 12575 ENGINEER PAUL E. EDMISTON

8-31-04

Notes:
(1) SEE SHEET 5, SHEET 8, FOR PLAN VIEW OF -Y1-

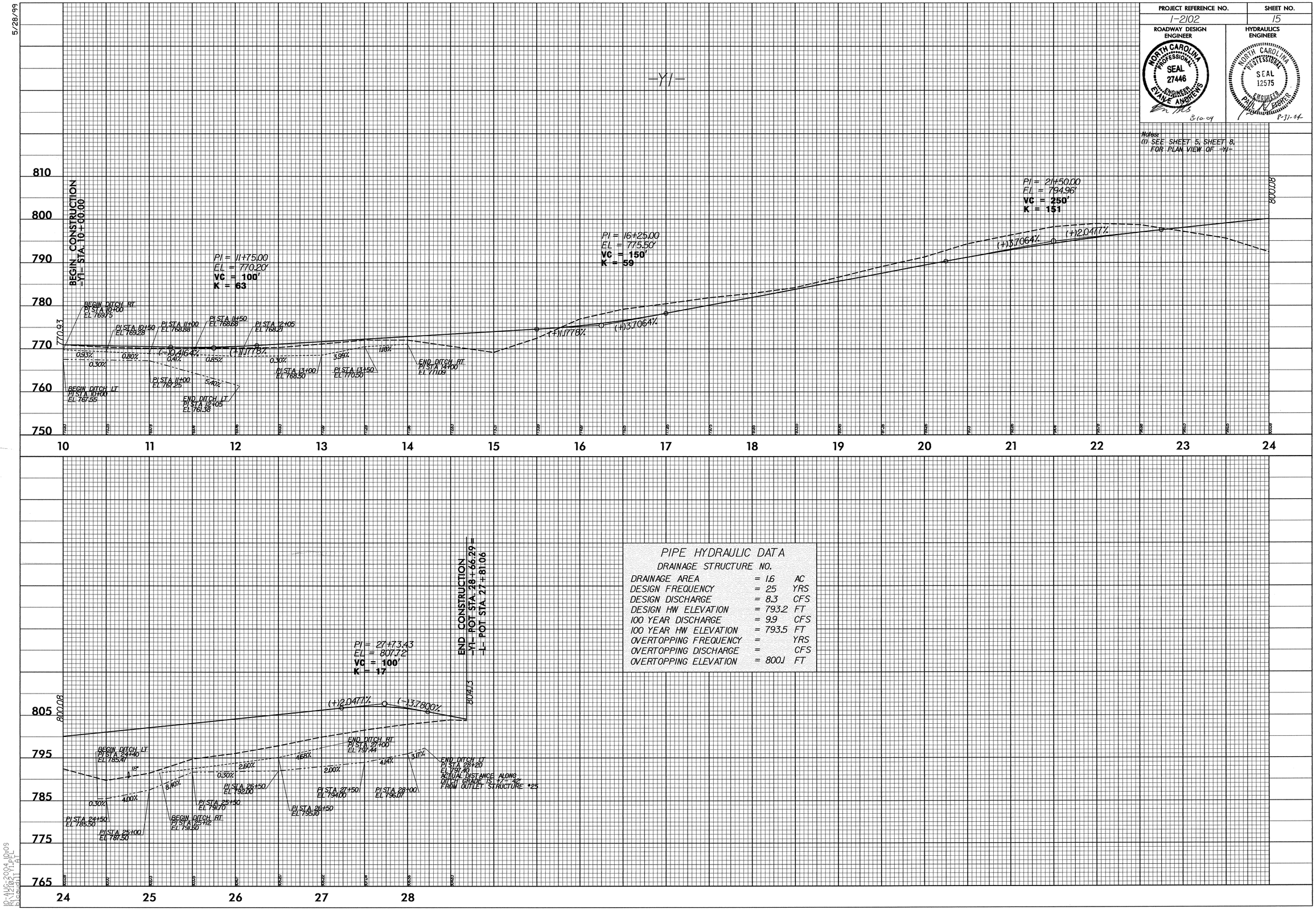

PIPE HYDRAULIC DATA

DRAINAGE STRUCTURE NO.

DRAINAGE AREA	= 1.6	AC
DESIGN FREQUENCY	= 25	YRS
DESIGN DISCHARGE	= 8.3	CFS
DESIGN HW ELEVATION	= 793.2	FT
100 YEAR DISCHARGE	= 9.9	CFS
100 YEAR HW ELEVATION	= 793.5	FT
OVERTOPPING FREQUENCY	=	YRS
OVERTOPPING DISCHARGE	=	CFS
OVERTOPPING ELEVATION	= 800.1	FT

10-AUG-2004 10:09
h:\12102\11.dgn
D:\Corp\11.dgn

PROJECT REFERENCE NO.	SHEET NO.
1-2102	16

ROADWAY DESIGN ENGINEER	HYDRAULICS ENGINEER
NORTH CAROLINA PROFESSIONAL SEAL 27446 ENGINEER ELAINE ANDREWS 8-10-04	NORTH CAROLINA PROFESSIONAL SEAL 12575 ENGINEER PAUL E. FISHER 8-10-04

Notes:
(1) SEE SHEET 8 FOR PLAN VIEW OF -Y2-

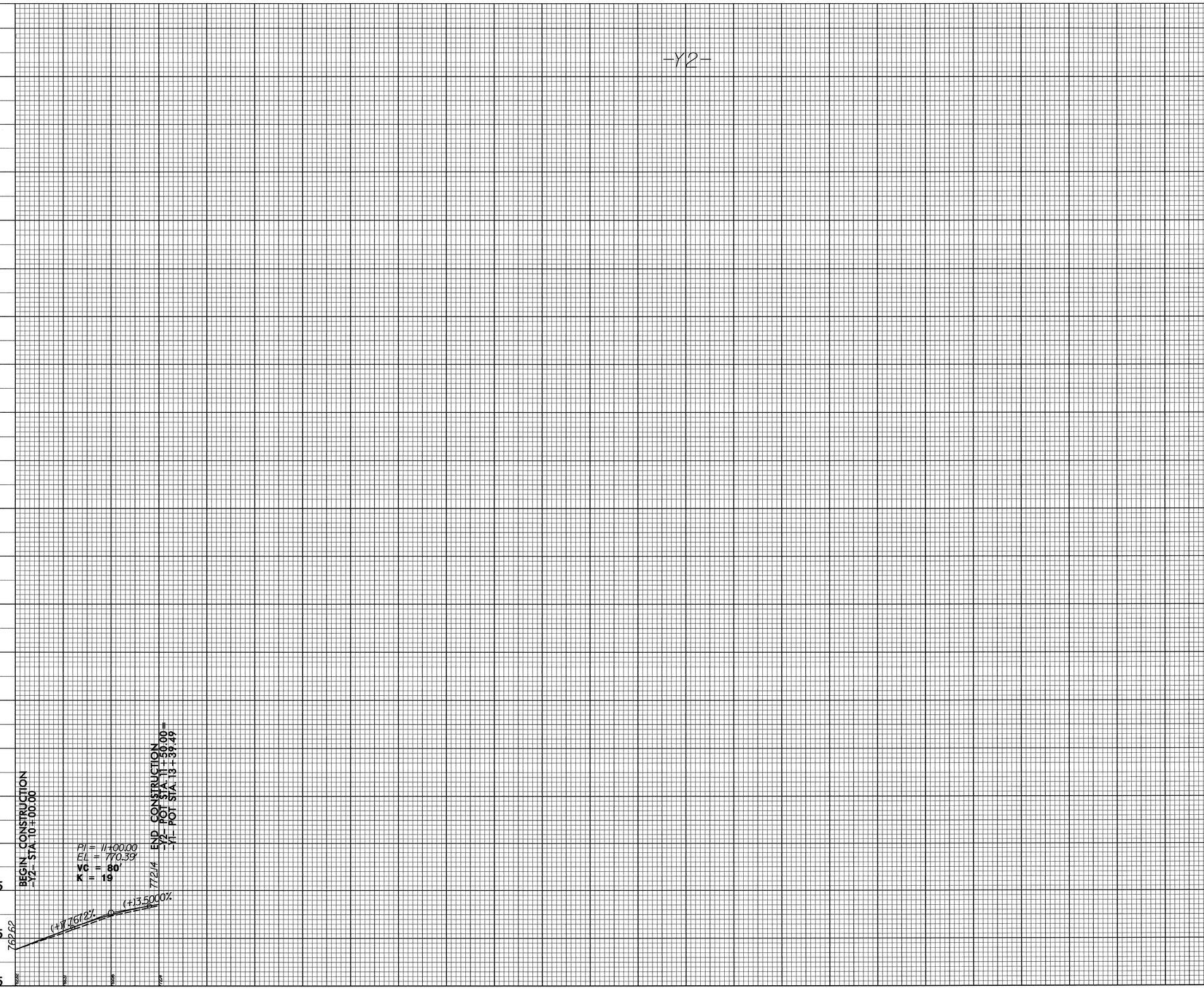

5/14/99

09-AUG-2004 11:53
R:\1210Z-Y2.PF
bjeovgill AT

5/28/99

PROJECT REFERENCE NO.	SHEET NO.
I-2102	17

ROADWAY DESIGN ENGINEER

NORTH CAROLINA PROFESSIONAL SEAL 27446 ENGINEER ELAINE AMORENG

8-10-04

HYDRAULICS ENGINEER

NORTH CAROLINA PROFESSIONAL SEAL 12575 ENGINEER PAUL K. FLEMER

8-31-04

Notes:
(1) SEE SHEET 5, SHEET 7, SHEET 8 FOR PLAN VIEW OF -Y4-

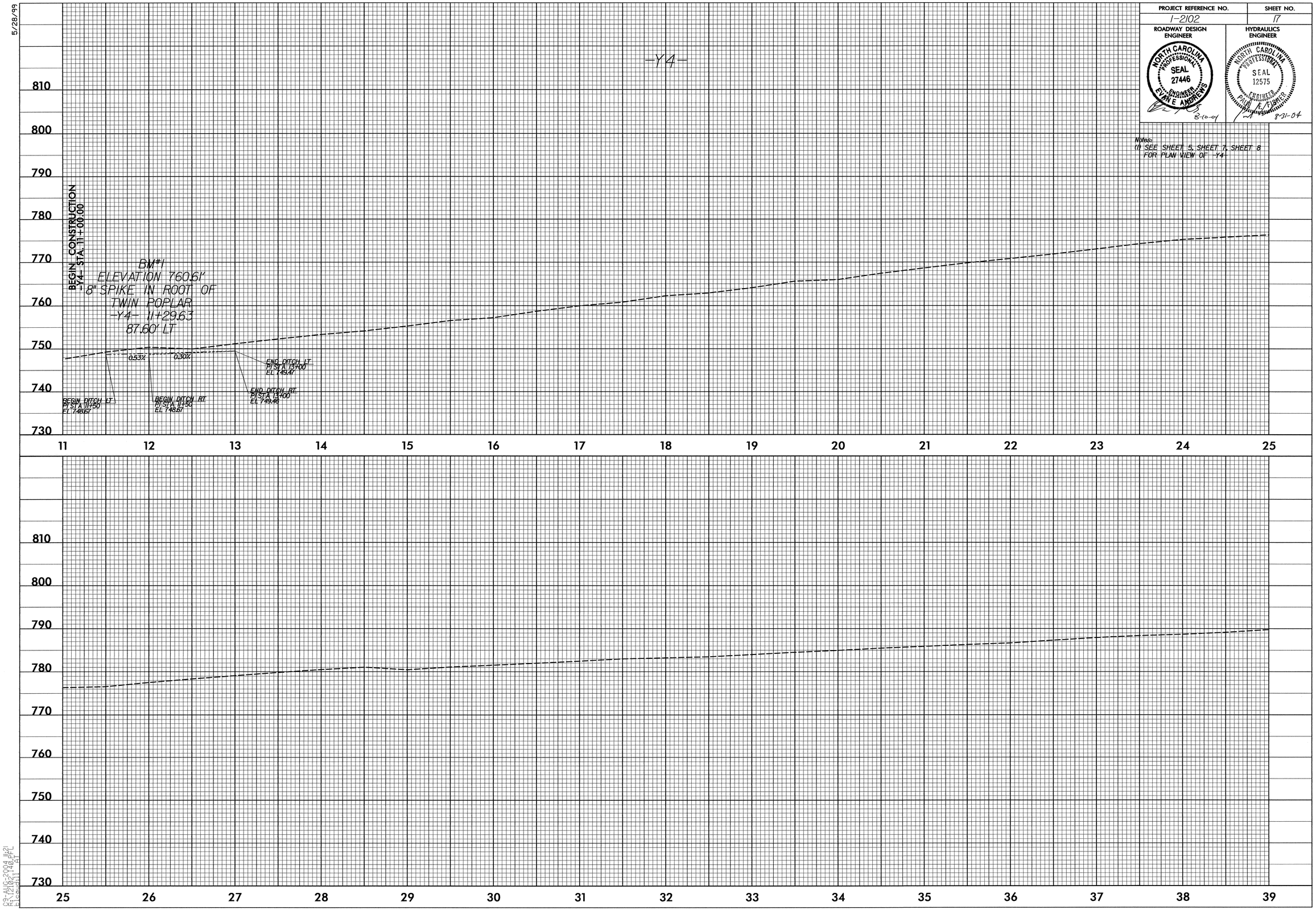

CS-MIG-2904 H2
R:\R82704.DGN
11:29:31 AM

5/28/99

PROJECT REFERENCE NO.	SHEET NO.
I-2102	18

ROADWAY DESIGN ENGINEER
NORTH CAROLINA PROFESSIONAL SEAL 27446 ENGINEER EVANE ANDREWS
8-10-04

HYDRAULICS ENGINEER
NORTH CAROLINA PROFESSIONAL SEAL 12575 ENGINEER PAUL K. FISHER
8-31-04

Notes:
(1) SEE SHEET 5, SHEET 9 FOR PLAN VIEW OF -Y4-

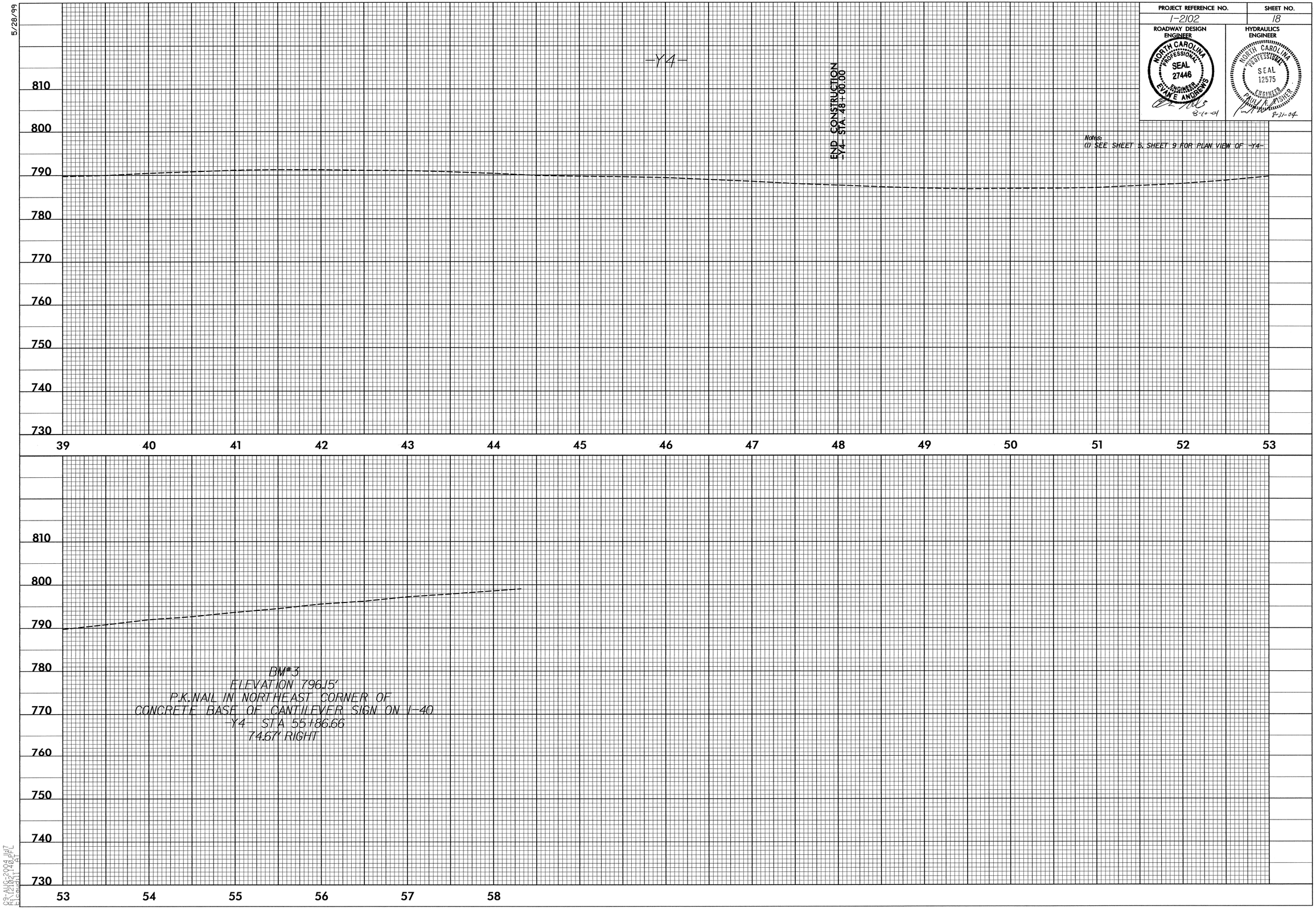

CS:AUG2004.UM7
ER:I2102-40.PL
Elcovali AT