NOTES:

STIRRUPS IN CAP MAY BE SHIFTED AS NECESSARY TO CLEAR ANCHOR BOLTS.

THE CONTRACTOR SHALL ALIGN THE "V" & "M" BARS AS SHOWN IN THE PLAN OF DRILLED PIERS AND COLUMNS. HOOKS ON "V" BARS MAY BE TURNED AS NECESSARY FOR PLACING REINFORCING STEEL.

ALL STEEL IN THE DRILLED PIERS IS INCLUDED IN THE PAY ITEMS FOR REINFORCING STEEL AND SPIRAL COLUMN REINFORCING STEEL.

THE CONTRACTOR'S ATTENTION IS CALLED TO THE FACT THAT THE LONGITUDINAL REINFORCEMENT FOR THE DRILLED PIER IS DETAILED WITH 3'-0" OF EXTRA LENGTH.

THE MECHANICAL COUPLERS SHALL BE USED TO JOIN THE LONGITUDINAL DRILLED PIER REINFORCING STEEL TO THE COLUMN REINFORCING STEEL. THE HEIGHT OF THE COUPLERS SHALL BE STAGGERED ON ALTERNATING BARS BY 1'-6" AND THE DRILLED PIER AND COLUMN STEEL SHALL BE CUT ACCORDINGLY, SEE SPECIAL PROVISIONS FOR MECHANICAL BUTT SPLICING FOR REINFORCING STEEL.

THE CONTRACTOR MAY PROPOSE ALTERNATIVE METHODS FOR MECHANICAL COUPLERS BY PROVIDING DETAILS AND SUBMITTING TO THE ENGINEER FOR REVIEW AND APPROVAL AT NO ADDITIONAL COST TO THE DEPARTMENT.

FOR DRILLED PIERS, SEE SPECIAL PROVISIONS.

THE LOCATION OF THE CONSTRUCTION JOINT IN THE DRILLED PIERS IS BASED ON AN APPROXIMATE GROUND LINE ELEVATION. IF THE CONSTRUCTION JOINT IS ABOVE THE ACTUAL GROUND LINE ELEVATION, THE CONTRACTOR SHALL PLACE THE CONSTRUCTION JOINT 1 FT. BELOW THE GROUND LINE.

IT IS ANTICIPATED THAT THE FOOTINGS FROM THE EXISTING BRIDGE WILL NOT CONFLICT WITH THE PROPOSED DRILLED PIERS. HOWEVER, SHOULD THERE BE A CONFLICT AND IT IS NECESSARY TO GO THRU THE EXISTING FOOTINGS, FOR THAT PORTION OF DRILLED PIER, THE CONTRACTOR WILL BE PAID FOR THE PRICE OF DRILLED PIER NOT IN SOIL.

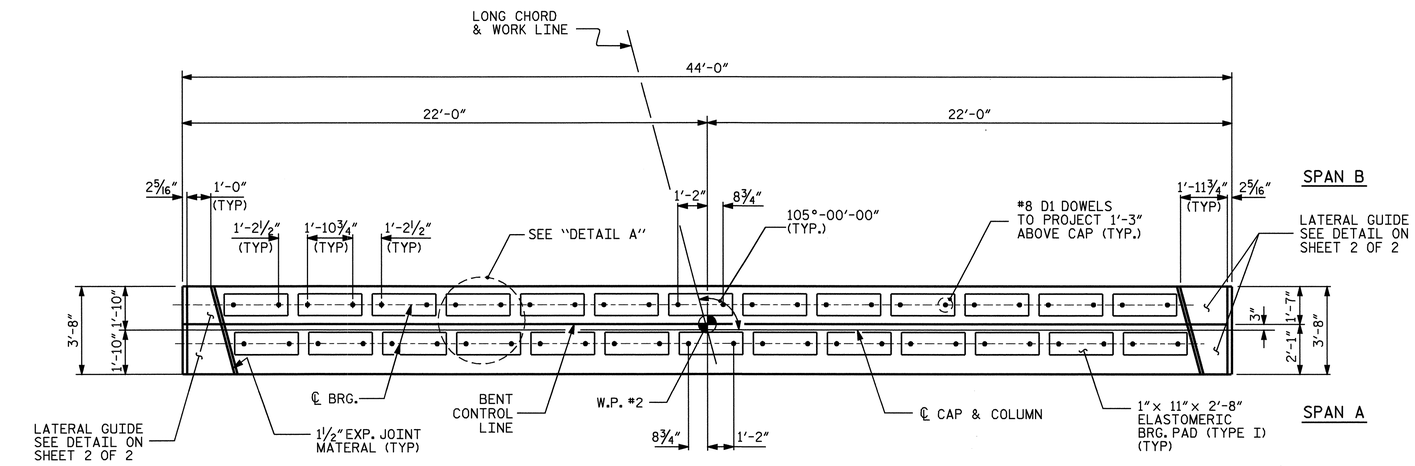

PLAN

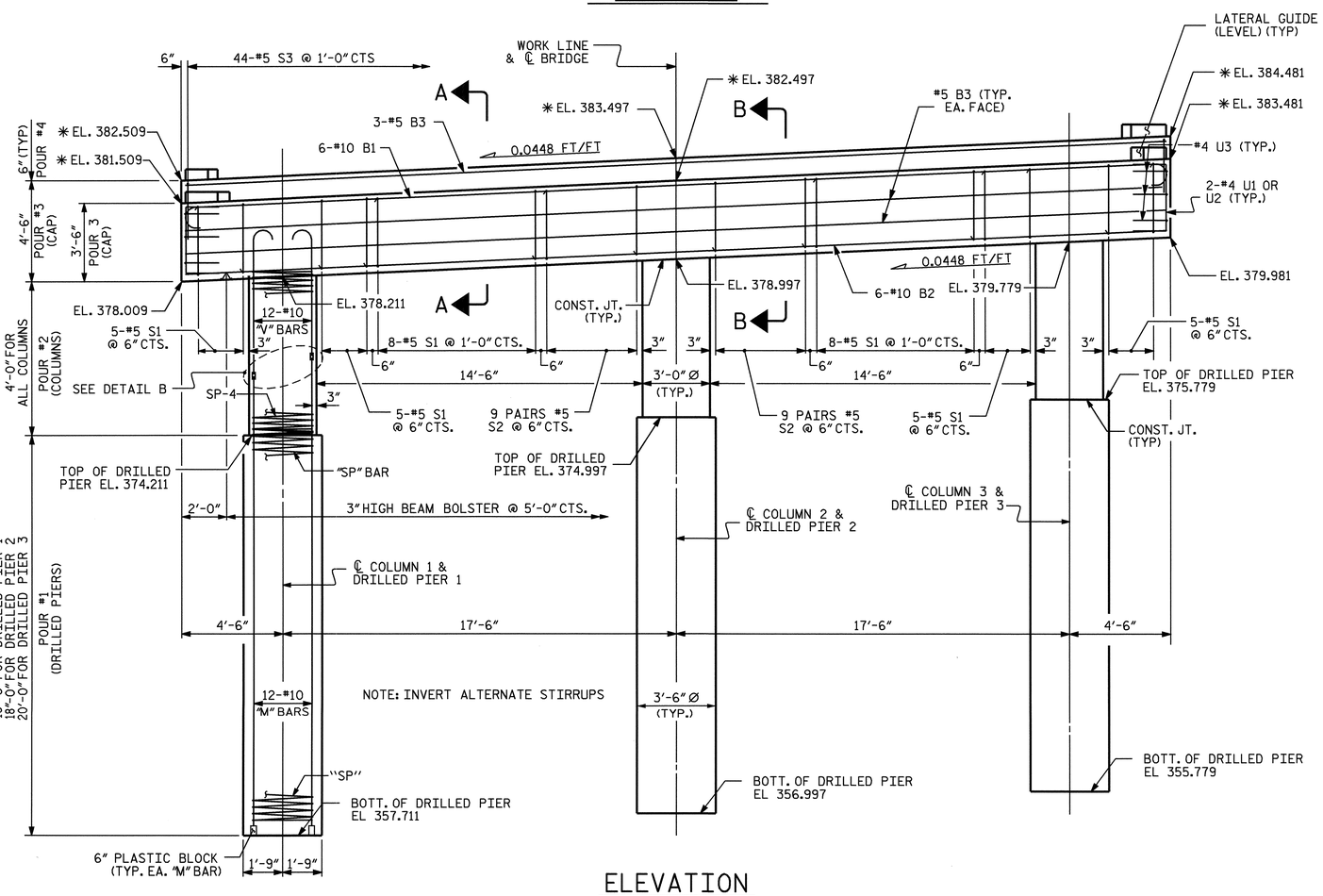

ELEVATION

COLUMN AND DRILLED PIER REINFORCING STEEL TYPICAL FOR ALL COLUMNS AND DRILLED PIERS.

✱ TOP OF CAP IS SLOPED BOTH TRANSVERSELY AND LONGITUDINALLY. FOR LOCATION OF TOP OF CAP ELEVATIONS, SEE SECTIONS A-A & B-B ON SHEET 2 OF 2.

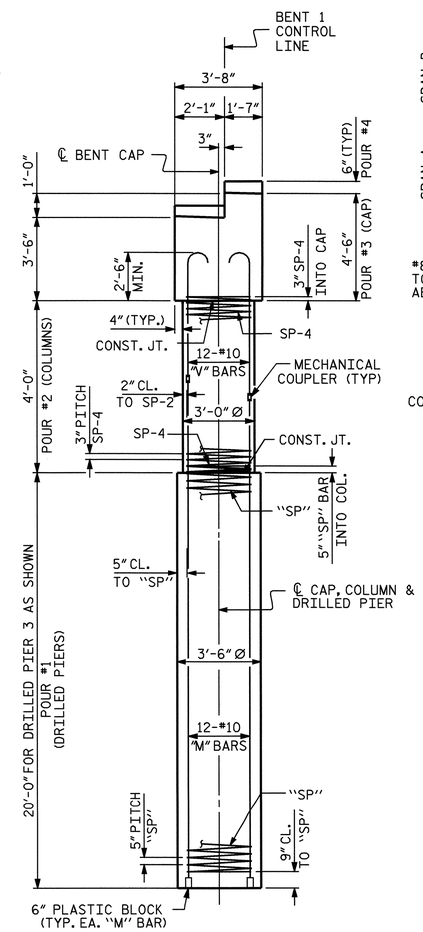

END ELEVATION

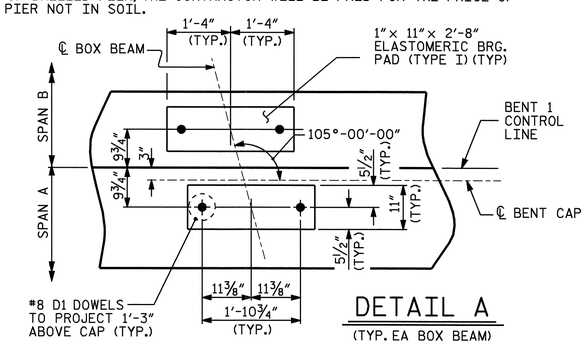

DETAIL A

(TYP. EA BOX BEAM)

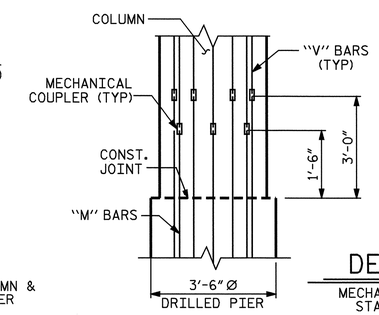

DETAIL B

MECHANICAL COUPLER STAGGER DETAIL

PROJECT NO. B-4110

DURHAM COUNTY

STATION: 17+41.66 -L-

SHEET 1 OF 2

STATE OF NORTH CAROLINA
DEPARTMENT OF TRANSPORTATION
RALEIGH

SUBSTRUCTURE

BENT 1

NORTH CAROLINA PROFESSIONAL SEAL 16301 ENGINEER TING HSIUNG FANG

3/6/06

REVISIONS								SHEET NO.
NO.	BY:	DATE:	NO.	BY:	DATE:			S-20
1			3					TOTAL SHEETS
2			4					27

DRAWN BY : T.H. FANG DATE : 10/18/05
CHECKED BY : S.M. RASHIDI DATE : 11/18/05

03-MAR-2006 14:43
J:\Structures\FINAL_PLANS\b4110_sd_01_bt.dgn
danderson