8/17/99

REVISIONS

MAPS #1 AND #2
US 64 / SR 2098
PAVEMENT MARKING PLAN

RALPH WHITEHEAD ASSOCIATES
CONSULTING ENGINEERS
P.O. BOX 35624
CHARLOTTE, NORTH CAROLINA 28235

PROJECT REFERENCE NO.	SHEET NO.
37613, ETC.	PMP-1
R/W SHEET NO.	
ROADWAY DESIGN ENGINEER	HYDRAULICS ENGINEER

NAD 83

NOTE: PAVEMENT MARKINGS MAY BE MODIFIED IN THE FIELD AS DIRECTED BY THE ENGINEER.

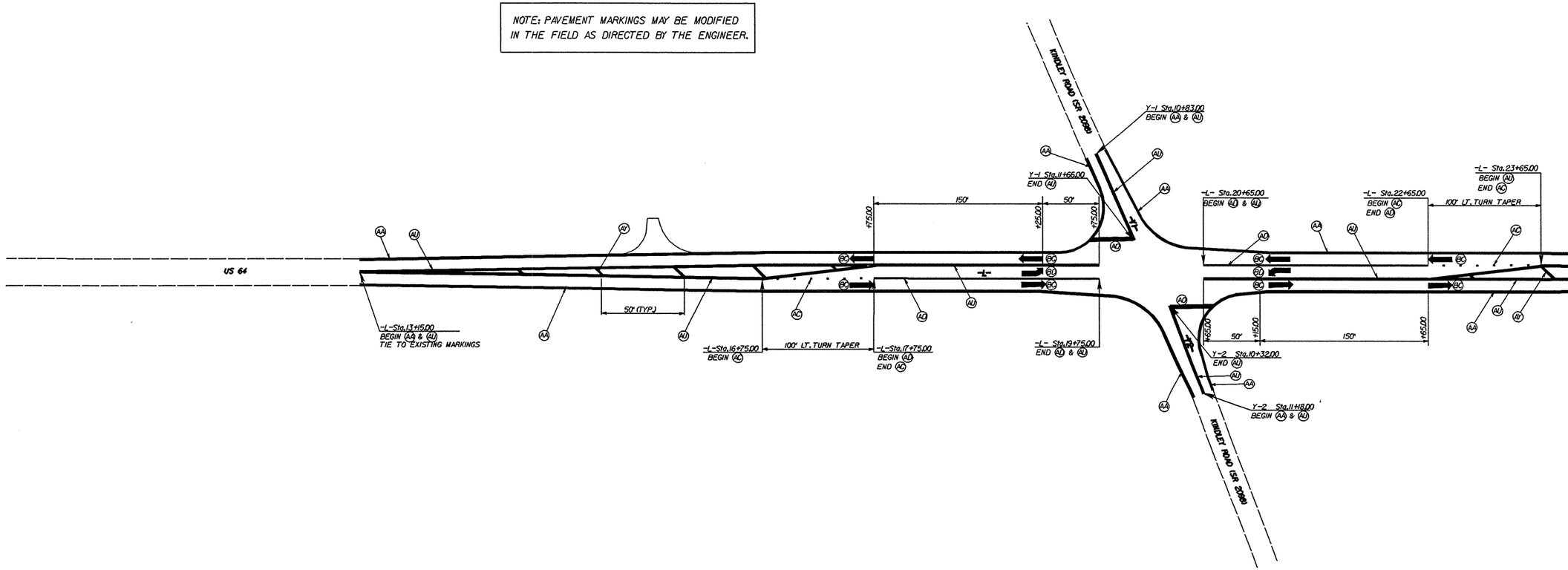

PAVEMENT MARKING SCHEDULE

ITEM	DESCRIPTION
AA - THERMOPLASTIC (4" WHITE, 90- MILS)	EDGELINE
AB - THERMOPLASTIC (4" YELLOW, 120 MILS)	4" x 10' SKIP
AC - THERMOPLASTIC (4" WHITE, 120 MILS)	4" x 2' MINI-SKIP
AD - THERMOPLASTIC (4" WHITE, 120 MILS)	SOLID LANE LINE
AO - THERMOPLASTIC (24" WHITE, 120 MILS)	STOP BAR
AP - THERMOPLASTIC (4" YELLOW, 120 MILSL)	EDGELINE
AU - THERMOPLASTIC (4" YELLOW, 120 MILSL)	DOUBLE CENTER LINE
AY - THERMOPLASTIC (8" YELLOW, 120 MILS)	DIAGONALS

PAVEMENT MARKING SCHEDULE

BC - THERMOPLASTIC (STRAIGHT THRU ARROW, 90 MILS)
BD - THERMOPLASTIC (LEFT TURN ARROW, 90 MILS)
BE - THERMOPLASTIC (RIGHT TURN ARROW, 90 MILS)

$$$$$SYSTIME$$$$$
$$$$$DGN$$$$$
$$$$$USERNAME$$$$$