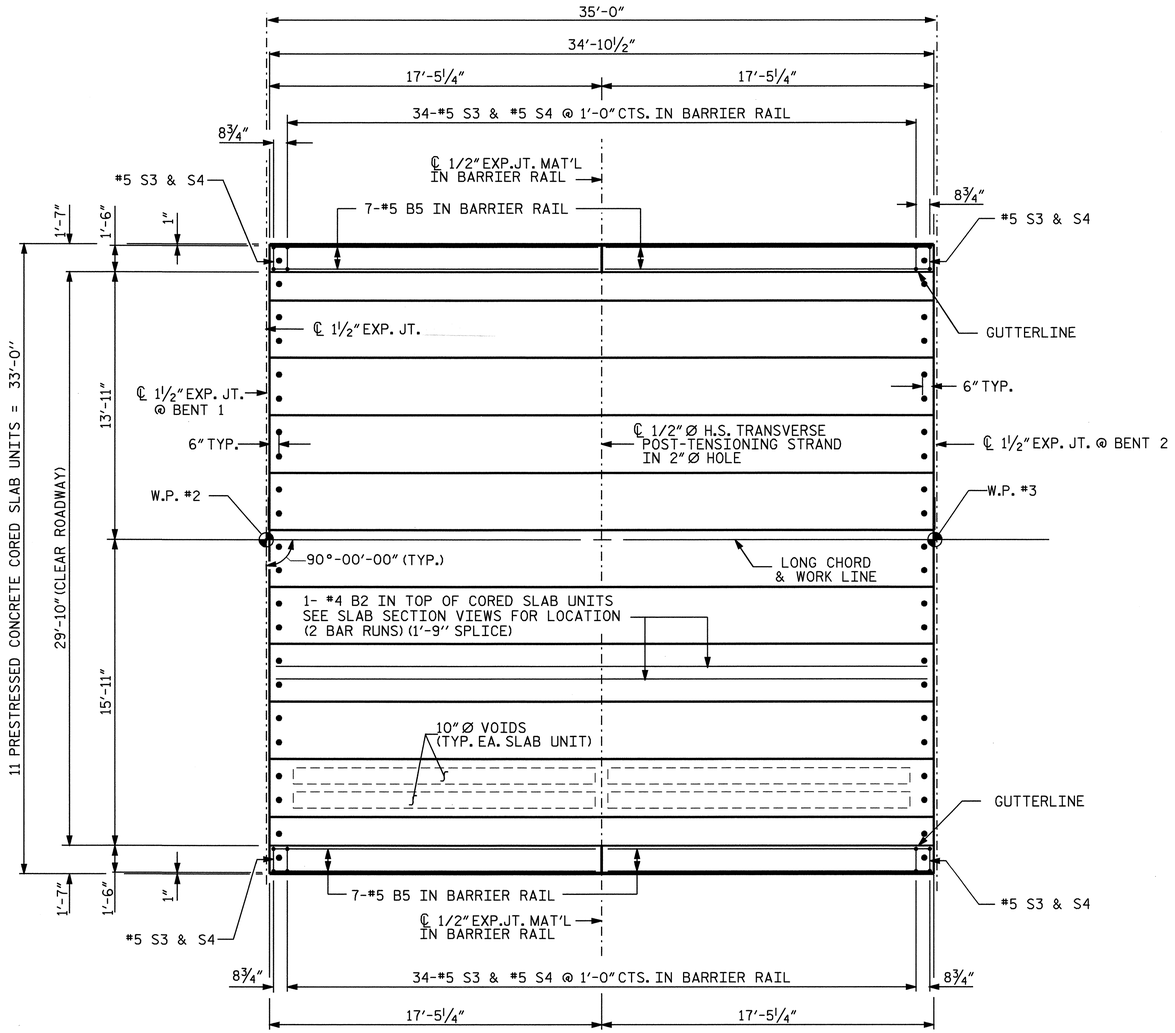

SPAN B

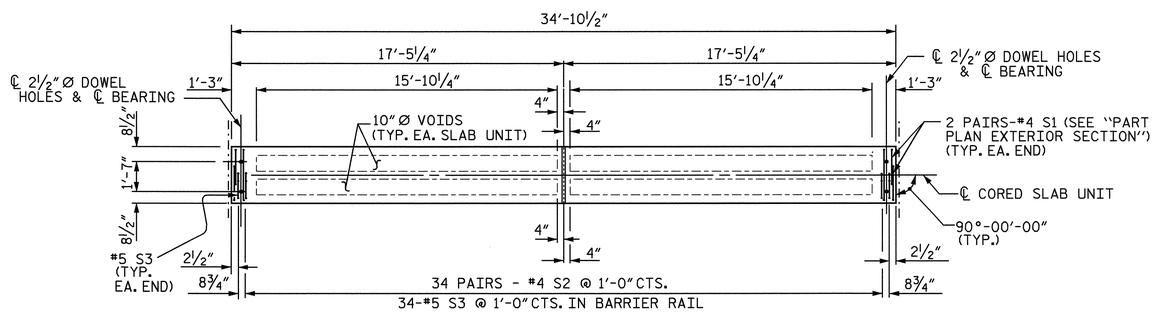

PLAN OF EXTERIOR SLAB

PLAN FOR INTERIOR SLAB IDENTICAL EXCEPT OMIT S3 BARS

PROJECT NO. B-3639

EDGECOMBE COUNTY

STATION: 17+59.40 -L-

SHEET 3 OF 6

STATE OF NORTH CAROLINA
DEPARTMENT OF TRANSPORTATION
RALEIGH

SUPERSTRUCTURE
PLAN OF SPAN B

NORTH CAROLINA PROFESSIONAL SEAL 11259 ENGINEER DAVID R. ANDERSON
1-12-06

REVISIONS						SHEET NO.
NO.	BY:	DATE:	NO.	BY:	DATE:	S-6
1			3			TOTAL SHEETS
2			4			20

DRAWN BY : N. Q. TRAN DATE : 4/4/04
CHECKED BY : T. A. WALTER DATE : 6-15-05

11-JAN-2006 12:06
I:\Structures\ntran\Microe-sc\wkg\b3639-cs.dgn
ntran