PROJECT REFERENCE NO.	SHEET NO.
B-3805	2-E

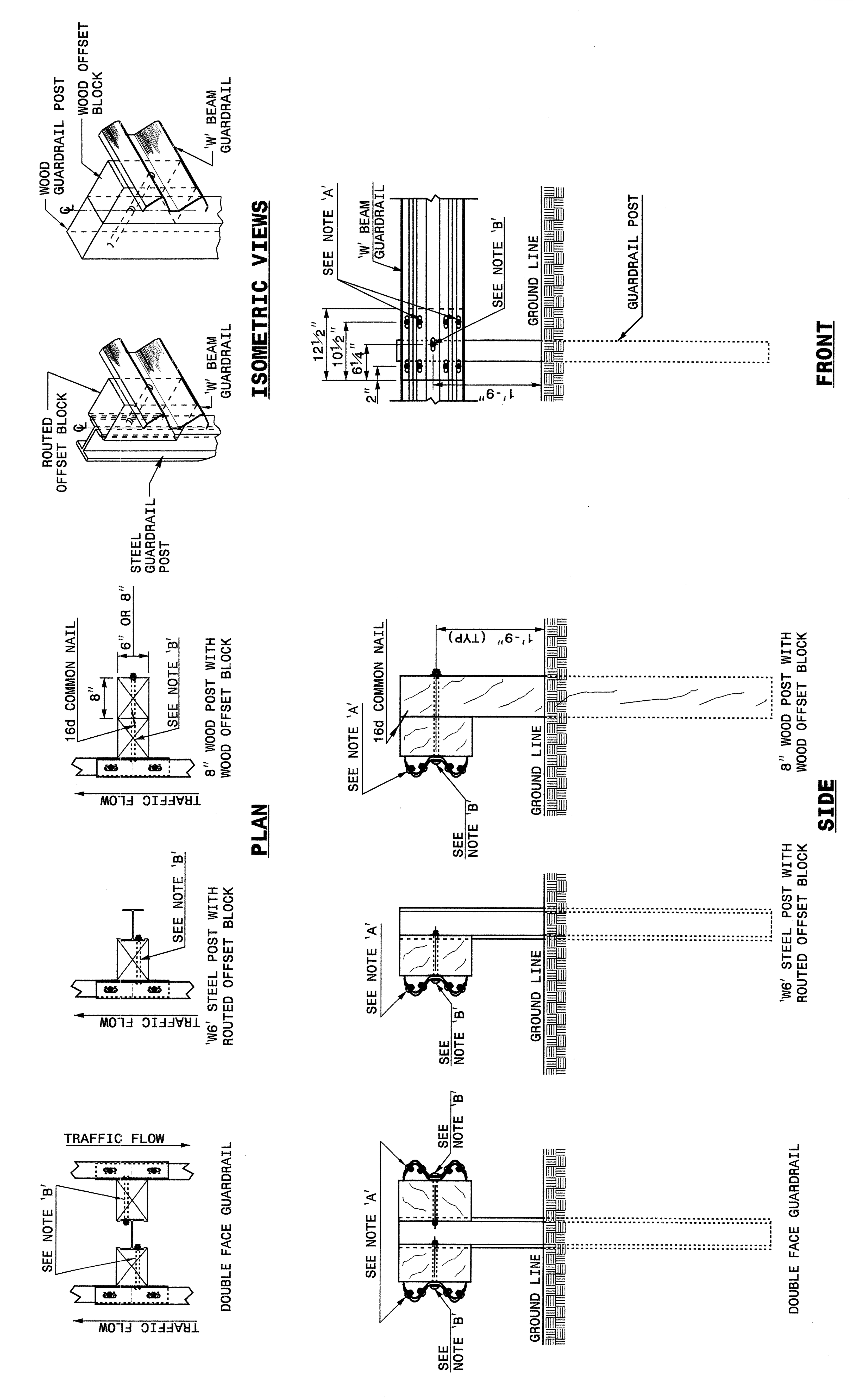

NOTES:
A - ⅝" DIA. BUTTON HEAD SPLICE BOLT 1¼" LONG (8 REQ. PER SPLICE JOINT).
B - ⅝" DIA. BUTTON HEAD BOLT 7½"/9" LONG WITH NUT FOR BOLTING 6"/8" ROUTED OFFSET BLOCK TO STEEL POSTS OR ⅝" DIA. BUTTON HEAD BOLT 18" LONG WITH STD. WASHER UNDER NUT FOR BOLTING TO WOOD POSTS (1 REQ. PER LOCATION)
C - FIELD PUNCHING OF HOLES INTO GUARDRAIL SHALL BE AS DIRECTED BY THE ENGINEER.

TYPICAL GUARDRAIL AND GUARDRAIL POST ALTERNATIVES

STATE OF NORTH CAROLINA DEPT. OF TRANSPORTATION DIVISION OF HIGHWAYS RALEIGH, N.C.	ENGLISH DETAIL DRAWING FOR **GUARDRAIL INSTALLATION**	SHEET 3 OF 7 **862D02**

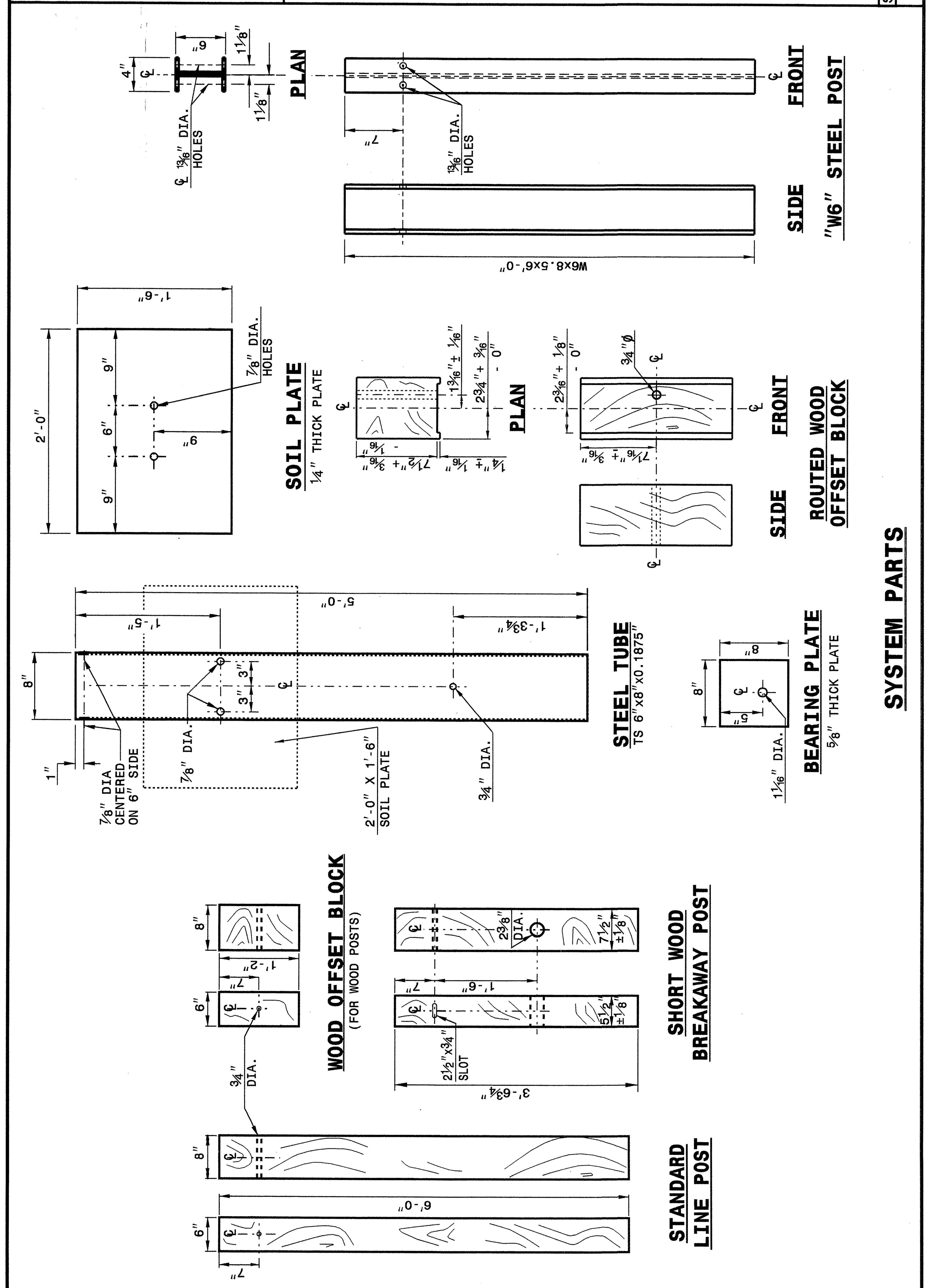

STATE OF NORTH CAROLINA DEPT. OF TRANSPORTATION DIVISION OF HIGHWAYS RALEIGH, N.C.	ENGLISH DETAIL DRAWING FOR **GUARDRAIL INSTALLATION**	SHEET 4 OF 7 **862D02**

NORTH CAROLINA PROFESSIONAL SEAL 022966 ENGINEER JOEL S. HOWERTON
10/6/05

DESIGN SERVICES UNIT
STANDARDS AND SPECIAL DESIGN
Office 919-250-4128 FAX 919-250-4119

SEE PLATE FOR TITLE

ORIGINAL BY: 2002 STD.862.02 DATE:
MODIFIED BY: E.E. WARD DATE: 02-09-03
CHECKED BY: [signature] DATE: 4-29-04
FILE SPEC.: /usr/stds/02todetail/english/86202/862d02.dgn

29-APR-2004 11:01
W:\Special Details\ericward\stds\02'Stds to Special Details\english\86202\0862d02.dgn
ericward AT DS212260
5/14/99