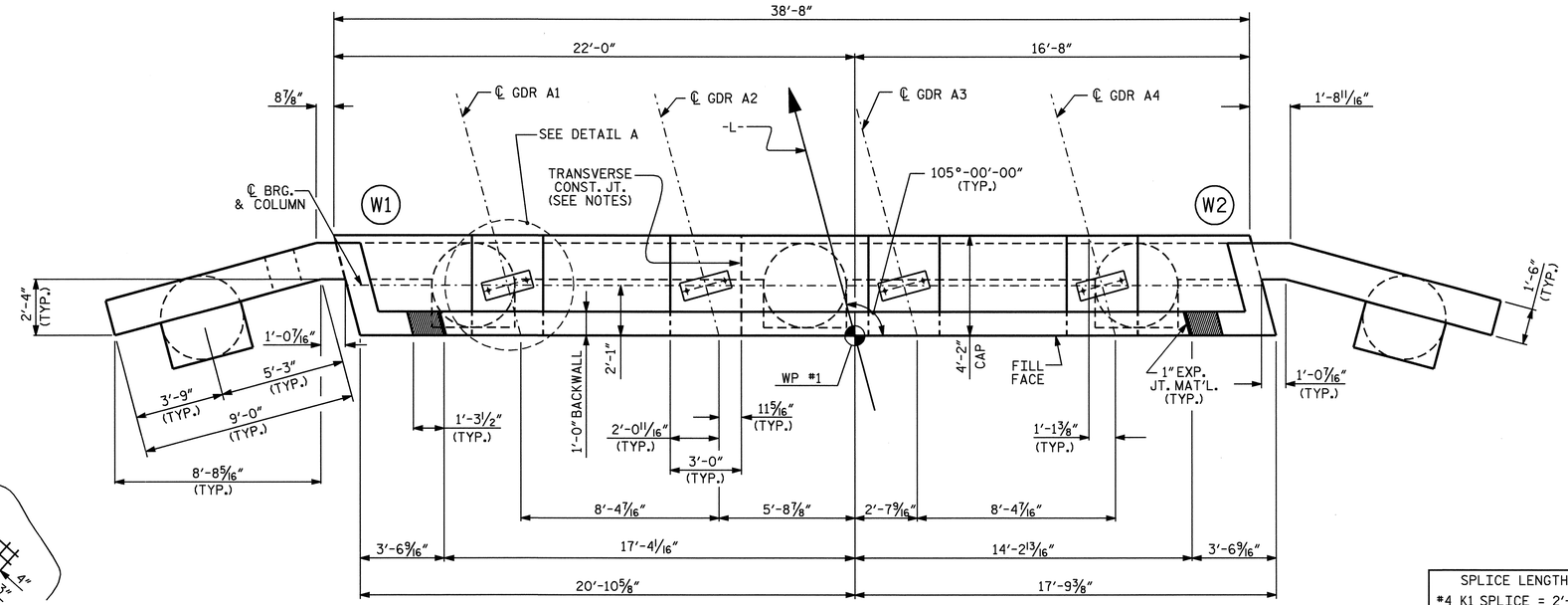

PLAN

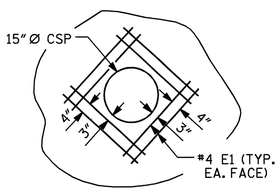

DETAIL B

THE 15" Ø CSP THRU THE LEFT WING RETAINING WALL IS TO BE LOCATED BY THE ENGINEER. THE REINFORCING STEEL SHALL BE CUT AND FIELD BENT AS NECESSARY TO CLEAR PIPE. THE AREA IS TO BE REINFORCED WITH ADDITIONAL BARS (E1) AS SHOWN.

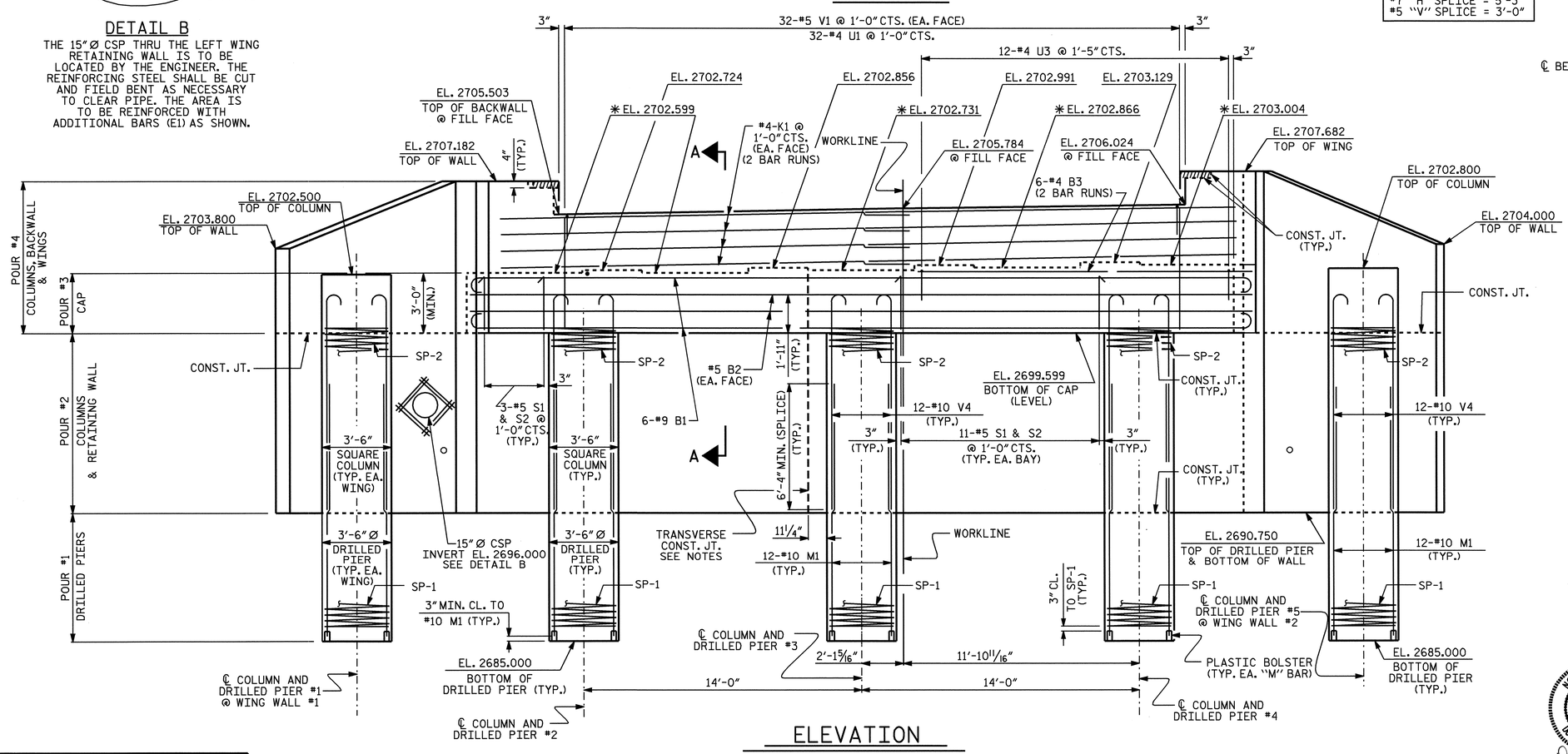

ELEVATION

*FOR LOCATIONS OF ELEVATIONS BETWEEN BRIDGE SEAT BUILDUPS, SEE SECTION A-A ON SHEET 3 OF 5.

NOTES

STIRRUPS & U2 BARS IN CAP MAY BE SHIFTED AS NECESSARY TO CLEAR ANCHOR BOLTS.

BACKWALL SHALL BE PLACED BEFORE APPLYING THE EPOXY PROTECTIVE COATING.

THE TOP SURFACE OF THE CAP EXCEPT THE BRIDGE SEAT BUILDUPS SHALL BE SLOPED TRANSVERSELY FROM THE FILL FACE TO THE BACK FACE AT THE RATE OF 2%.

ALL STEEL IN THE DRILLED PIERS IS INCLUDED IN THE PAY ITEMS FOR "REINFORCING STEEL" AND "SPIRAL COLUMN REINFORCING STEEL".

THE CONTRACTOR'S ATTENTION IS CALLED TO THE FACT THAT THE LONGITUDINAL REINFORCEMENT FOR THE DRILLED PIERS IS DETAILED WITH 3 FEET OF EXTRA LENGTH.

HOOKS ON "V" BARS MAY BE TURNED AS NECESSARY FOR PLACING REINFORCING STEEL.

FOR EPOXY PROTECTIVE COATING, SEE SPECIAL PROVISIONS.

THE CONCRETE IN THE SHADED AREA OF THE WING SHALL BE POURED AFTER THE JOINT BETWEEN THE DECK AND THE APPROACH SLAB HAS BEEN SAWED AND THE PARAPET AND END POST ARE CAST IF SLIP FORMING IS USED.

THE TOP SURFACE AREAS OF THE END BENT CAP SHALL BE CURED IN ACCORDANCE WITH THE STANDARD SPECIFICATIONS EXCEPT THE MEMBRANE CURING COMPOUND METHOD SHALL NOT BE USED.

FOR TRANSVERSE CONSTRUCTION JOINT DETAILS, SEE SHEET 5 OF 5.

PIPE DRAINS IN WALL MAY BE SHIFTED SLIGHTLY AS NECESSARY TO CLEAR REINFORCING STEEL.

SPLICE LENGTH
#4 K1 SPLICE = 2'-5"
#4 B3 SPLICE = 2'-5"
#5 "H" SPLICE = 3'-0"
#7 "H" SPLICE = 5'-3"
#5 "V" SPLICE = 3'-0"

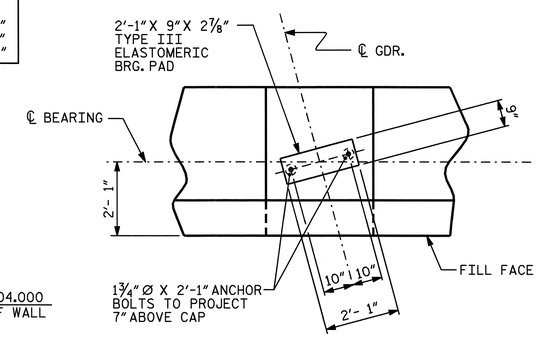

DETAIL A

(TYP. EACH BEARING)

PROJECT NO. B-3805

ASHE COUNTY

STATION: 10+63.50 -L-

SHEET 1 OF 5

STATE OF NORTH CAROLINA
DEPARTMENT OF TRANSPORTATION
RALEIGH

SUBSTRUCTURE END BENT 1

NORTH CAROLINA PROFESSIONAL SEAL 14855 ENGINEER DOUGLAS R. CALHOUN
11-14-05

REVISIONS								SHEET NO.
NO.	BY:	DATE:	NO.	BY:	DATE:			S-15
1			3					TOTAL SHEETS
2			4					26

DRAWN BY : J.B. WILSON DATE : 9/13/05
CHECKED BY : K.P. SEDAI DATE : 9/14/05

14-NOV-2005 10:12
G:\Structures\jwilson\Microstation\B3805_sd_E*1.dgn
gallen