09/08/99

TIP PROJECT: B-4199

CONTRACT: C201445

See Sheet 1-A For Index of Sheets
See Sheet 1-B For Conventional Symbols

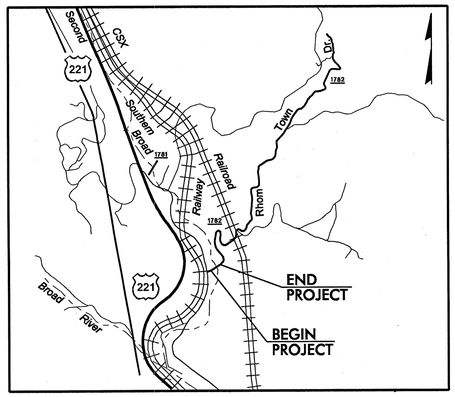

VICINITY MAP

STATE OF NORTH CAROLINA
DIVISION OF HIGHWAYS

McDOWELL COUNTY

STATE	STATE PROJECT REFERENCE NO.	SHEET NO.	TOTAL SHEETS
N.C.	B-4199	1	

STATE PROJ. NO.	F. A. PROJ. NO.	DESCRIPTION
33546.1.1	BRZ-1782(1)	P.E.
33546.3.1	BRZ-1782(1)	R/W & UTIL.
33546.2.1	BRZ-1782(1)	CONST.

LOCATION: BRIDGE NO. 198 OVER SECOND BROAD RIVER ON SR 1782

TYPE OF WORK: GRADING, PAVING, DRAINAGE AND STRUCTURE

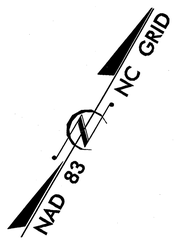

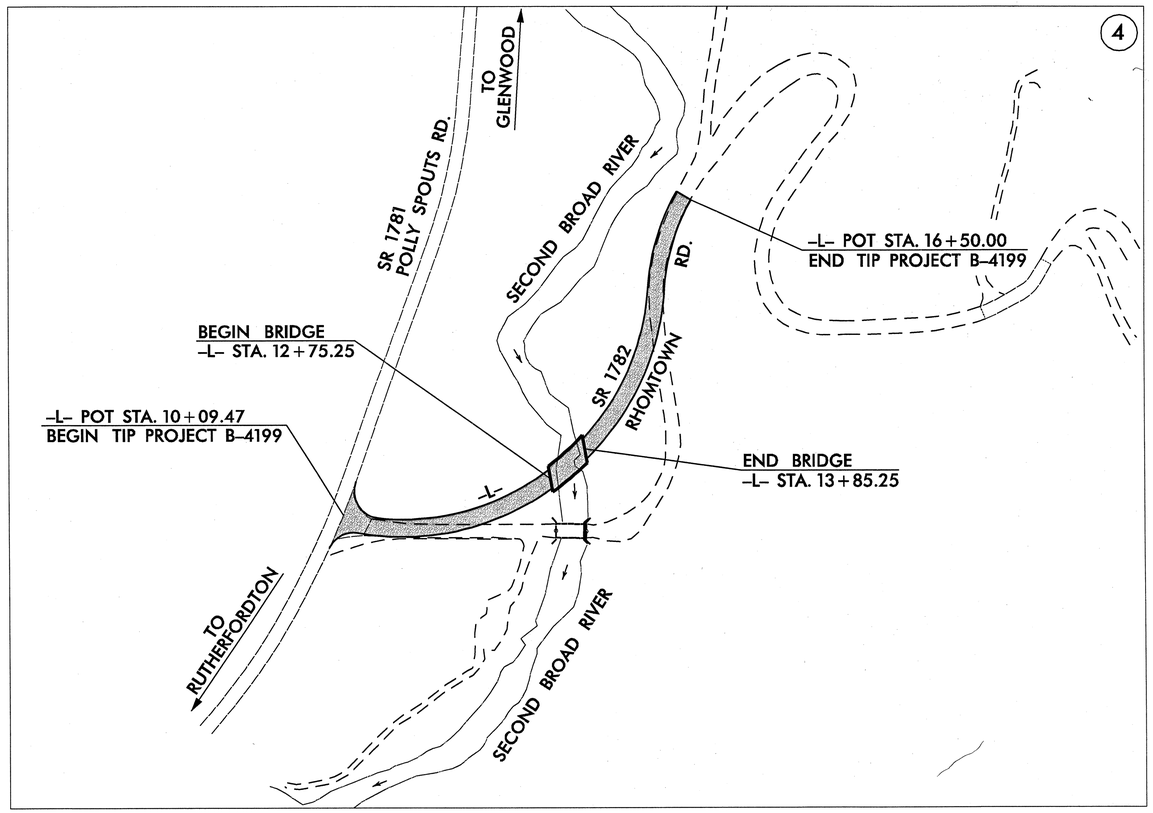

SUNGATE DESIGN GROUP, P.A.
915 JONES FRANKLIN ROAD
RALEIGH, NORTH CAROLINA 27606
TEL (919) 859-2243 FAX (919) 859-2261

** DESIGN EXCEPTION FOR DESIGN SPEED REQUIRED

GRAPHIC SCALES

50 25 0 50 100
PLANS

50 25 0 50 100
PROFILE (HORIZONTAL)

10 5 0 10 20
PROFILE (VERTICAL)

DESIGN DATA

ADT 2006 = 117
ADT 2026 = 204
DHV = 12%
D = 60%
T = 3% *
V = 30 MPH**

* TTST 1% DUAL 2%

PROJECT LENGTH

LENGTH ROADWAY TIP PROJECT B-4199	=	0.100 mi
LENGTH STRUCTURE TIP PROJECT B-4199	=	0.021 mi
TOTAL LENGTH TIP PROJECT B-4199	=	0.121 mi

Plans prepared in the office of:

Ramey Kemp & Associates, Inc.
Transportation Consulting Engineers
4928-A Windy Hill Drive
Raleigh, North Carolina 27609
(919) 872-5115 fax (919) 878-5416

for the North Carolina Department of Transportation

2002 STANDARD SPECIFICATIONS

RIGHT OF WAY DATE:
FEBRUARY 18, 2005

LETTING DATE:
NOVEMBER 21, 2006

N.C.D.O.T. CONTACT:
CATHY S. HOUSER, PE
PROJECT ENGINEER
ROADWAY DESIGN

HYDRAULICS ENGINEER
NORTH CAROLINA PROFESSIONAL SEAL 9334 ENGINEER W. HENRY WELLS, JR.
11/14/05
W. HENRY WELLS, JR. P.E.

ROADWAY DESIGN ENGINEER
NORTH CAROLINA PROFESSIONAL SEAL 27771 ENGINEER MATTHEW B. COPPLE
11/9/05
MATTHEW B. COPPLE P.E.

DIVISION OF HIGHWAYS
STATE OF NORTH CAROLINA

P.E.
STATE DESIGN ENGINEER

DEPARTMENT OF TRANSPORTATION
FEDERAL HIGHWAY ADMINISTRATION

APPROVED
DIVISION ADMINISTRATOR DATE

$$$$$SYSTIME$$$$
$$$$$USERNAME$$$$
$$$$$DGN$$$$$

ROADWAY DESIGN ENGINEER	PROJECT REFERENCE NO.	SHEET NO.
NORTH CAROLINA PROFESSIONAL SEAL 27711 ENGINEER MATTHEW B. COMPTON 3/20/06	B-4199	1-A

ROADWAY ENGLISH STANDARD DRAWINGS

The following Roadway Standards as appear in "Roadway Standard Drawings" Highway Design Branch - N. C. Department of Transportation - Raleigh, N. C., Dated January 15, 2002 are applicable to this project and by reference hereby are considered a part of these plans:

STD.NO.	TITLE
DIVISION 2 - EARTHWORK	
200.02	Method of Clearing - Method II
225.02	Guide for Grading Subgrade - Secondary and Local
225.04	Method of Obtaining Superelevation - Two Lane Pavement
DIVISION 5 - SUBGRADE, BASES AND SHOULDERS	
560.01	Method of Shoulder Construction - High Side of Superelevated Curve - Method I
DIVISION 6 - ASPHALT BASES AND PAVEMENTS	
654.01	Pavement Repairs
DIVISION 8 - INCIDENTALS	
806.01	Concrete Right-of-Way Marker
806.02	Granite Right-of-Way Marker
815.03	Pipe Underdrain and Blind Drain
846.01	Concrete Curb, Gutter and Curb and Gutter (For SBG)
862.01	Guardrail Placement

INDEX OF SHEETS

SHEET NUMBER	SHEET
1	TITLE SHEET
1-A	INDEX OF SHEETS, GENERAL NOTES, AND LIST OF STANDARD DRAWINGS
1-B	CONVENTIONAL SYMBOLS
1-C THRU 1-D	SURVEY CONTROL SHEET
2	PAVEMENT SCHEDULE, TYPICAL SECTIONS, AND STRUCTURE DETAIL
2-A	PREFORMED SCOUR HOLE DETAIL
2-B	MODIFIED CONCRETE FLUME DETAIL
2-C THRU 2-F	DETAIL OF REINFORCED BRIDGE APPROACH FILLS
2-G THRU 2-J	DETAIL OF GUARDRAIL
2-K THRU 2-M	DETAIL OF STRUCTURE ANCHOR UNITS
3	SUMMARY OF QUANTITIES
3-A	SUMMARY OF DRAINAGE QUANTITIES GUARDRAIL AND EARTHWORK
4	PLAN SHEET
5	PROFILE SHEET
TCP-1 THRU TCP-9	TRAFFIC CONTROL PLANS
EC-1 THRU EC-5	EROSION CONTROL PLANS
RF-1	REFORESTATION PLAN
SIGN-1 THRU SIGN-3	SIGNING PLANS
X-1	CROSS-SECTION SUMMARY
X-2 THRU X-6	CROSS-SECTIONS
S-1 THRU S-33	STRUCTURE PLANS

GENERAL NOTES: 2002 SPECIFICATIONS
EFFECTIVE: 01-15-02
REVISED: 11-23-04

GRADE LINE:
GRADING AND SURFACING:

THE GRADE LINES SHOWN DENOTE THE FINISHED ELEVATION OF THE PROPOSED SURFACING AT GRADE POINTS SHOWN ON THE TYPICAL SECTIONS. GRADE LINES MAY BE ADJUSTED AT THEIR BEGINNING AND ENDING AND AT STRUCTURES AS DIRECTED BY THE ENGINEER IN ORDER TO SECURE A PROPER TIE-IN.

CLEARING:

CLEARING ON THIS PROJECT SHALL BE PERFORMED TO THE LIMITS ESTABLISHED BY METHOD II.

THE CONTRACTOR'S ATTENTION IS DIRECTED TO THE AREAS IN THE PLANS DESIGNATED SAFETY CLEARING. THE LIMITS ARE AS SHOWN AND THE CLEARING AND GRUBBING IS CONSIDERED A PART OF THE LUMP SUM ITEM FOR "CLEARING AND GRUBBING".

SUPERELEVATION:

ALL CURVES ON THIS PROJECT SHALL BE SUPERELEVATED IN ACCORDANCE WITH STD. NO. 225.04 USING THE RATE OF SUPERELEVATION AND RUNOFF SHOWN ON THE PLANS. SUPERELEVATION IS TO BE REVOLVED ABOUT THE GRADE POINTS SHOWN ON THE TYPICAL SECTIONS.

SHOULDER CONSTRUCTION:

ASPHALT AND EARTH SHOULDER CONSTRUCTION ON THE HIGH SIDE OF SUPERELEVATED CURVES SHALL BE IN ACCORDANCE WITH STD. NO. 560.01.

UNDERDRAINS:

UNDERDRAINS SHALL BE CONSTRUCTED IN ACCORDANCE WITH STD. NO. 815.03 AT LOCATIONS DIRECTED BY THE ENGINEER.

GUARDRAIL:

THE GUARDRAIL LOCATIONS SHOWN ON THE PLANS MAY BE ADJUSTED DURING CONSTRUCTION AS DIRECTED BY THE ENGINEER. THE CONTRACTOR SHOULD CONSULT WITH THE ENGINEER PRIOR TO ORDERING GUARDRAIL MATERIAL.

TEMPORARY SHORING:

SHORING REQUIRED FOR THE MAINTENANCE OF TRAFFIC WILL BE PAID FOR AS "EXTRA WORK" IN ACCORDANCE WITH SECTION 104-7.

END BENTS:

THE ENGINEER SHALL CHECK THE STRUCTURE END BENT PLANS, DETAILS, AND CROSS-SECTION PRIOR TO SETTING OF THE SLOPE STAKES FOR THE EMBANKMENT OR EXCAVATION APPROACHING A BRIDGE.

UTILITIES:

ANY RELOCATION OF EXISTING UTILITIES WILL BE ACCOMPLISHED BY OTHERS.

RIGHT-OF-WAY MARKERS:

ALL RIGHT-OF-WAY MARKERS ON THIS PROJECT SHALL BE PLACED BY CONTRACT.

Ramey Kemp & Associates, Inc.
Transportation Consulting Engineers
4928-A Windy Hill Drive Raleigh, North Carolina 27609
(919) 872-5115 Fax (919) 878-5416

PROJECT REFERENCE NO.	SHEET NO.
B-4199	1-B

*S.U.E = SUBSURFACE UTILITY ENGINEER

STATE OF NORTH CAROLINA
DIVISION OF HIGHWAYS

CONVENTIONAL SYMBOLS

ROADS & RELATED ITEMS

- Edge of Pavement
- Curb
- Prop. Slope Stakes Cut — C
- Prop. Slope Stakes Fill — F
- Prop. Woven Wire Fence
- Prop. Chain Link Fence
- Prop. Barbed Wire Fence
- Prop. Wheelchair Ramp — WCR
- Curb Cut for Future Wheelchair Ramp — CCFR
- Exist. Guardrail
- Prop. Guardrail
- Equality Symbol
- Pavement Removal

RIGHT OF WAY

- Baseline Control Point
- Existing Right of Way Marker
- Exist. Right of Way Line w/Marker
- Prop. Right of Way Line with Proposed R/W Marker (Iron Pin & Cap)
- Prop. Right of Way Line with Proposed (Concrete or Granite) R/W Marker
- Exist. Control of Access Line — C A
- Prop. Control of Access Line — C A
- Exist. Easement Line — E
- Prop. Temp. Construction Easement Line — E
- Prop. Temp. Drainage Easement Line — TDE
- Prop. Perm. Drainage Easement Line — PDE

HYDROLOGY

- Stream or Body of Water
- River Basin Buffer — RBB
- Flow Arrow
- Disappearing Stream
- Spring
- Swamp Marsh
- Shoreline
- Falls, Rapids
- Prop Lateral, Tail, Head Ditches — FLOW

STRUCTURES

MAJOR

- Bridge, Tunnel, or Box Culvert — CONC
- Bridge Wing Wall, Head Wall and End Wall — CONC WW

MINOR

- Head & End Wall — CONC HW
- Pipe Culvert
- Footbridge
- Drainage Boxes — CB
- Paved Ditch Gutter

UTILITIES

- Exist. Pole
- Exist. Power Pole
- Prop. Power Pole
- Exist. Telephone Pole
- Prop. Telephone Pole
- Exist. Joint Use Pole
- Prop. Joint Use Pole
- Telephone Pedestal — T
- U/G Telephone Cable Hand Hold — HH
- Cable TV Pedestal — C
- U/G TV Cable Hand Hold — HH
- U/G Power Cable Hand Hold — HH
- Hydrant
- Satellite Dish
- Exist. Water Valve
- Sewer Clean Out
- Power Manhole — P
- Telephone Booth
- Cellular Telephone Tower
- Water Manhole — W
- Light Pole
- H-Frame Pole
- Power Line Tower
- Pole with Base
- Gas Valve
- Gas Meter
- Telephone Manhole — T
- Power Transformer
- Sanitary Sewer Manhole
- Storm Sewer Manhole — S
- Tank; Water, Gas, Oil
- Water Tank With Legs
- Traffic Signal Junction Box — S
- Fiber Optic Splice Box — F
- Television or Radio Tower
- Utility Power Line Connects to Traffic Signal Lines Cut Into the Pavement — TS TS

- Recorded Water Line — W W
- Designated Water Line (S.U.E.*) — W W
- Sanitary Sewer — SS SS
- Recorded Sanitary Sewer Force Main — FSS FSS
- Designated Sanitary Sewer Force Main(S.U.E.*) — FSS FSS
- Recorded Gas Line — G G
- Designated Gas Line (S.U.E.*) — G G
- Storm Sewer — S S
- Recorded Power Line — P P
- Designated Power Line (S.U.E.*) — P P
- Recorded Telephone Cable — T T
- Designated Telephone Cable (S.U.E.*) — T T
- Recorded U/G Telephone Conduit — TC TC
- Designated U/G Telephone Conduit (S.U.E.*) — TC TC
- Unknown Utility (S.U.E.*) — ?UTL ?UTL
- Recorded Television Cable — TV TV
- Designated Television Cable (S.U.E.*) — TV TV
- Recorded Fiber Optics Cable — FO FO
- Designated Fiber Optics Cable (S.U.E.*) — FO FO
- Exist. Water Meter
- U/G Test Hole (S.U.E.*)
- Abandoned According to U/G Record — ATTUR
- End of Information — E.O.I.

BOUNDARIES & PROPERTIES

- State Line
- County Line
- Township Line
- City Line
- Reservation Line
- Property Line
- Property Line Symbol — PL
- Exist. Iron Pin — EIP
- Property Corner
- Property Monument — ECM
- Property Number — 123
- Parcel Number — 6
- Fence Line — WW & ISBW
- Existing Wetland Boundaries — WLB
- High Quality Wetland Boundary — HQ WLB
- Medium Quality Wetland Boundaries — MQ WLB
- Low Quality Wetland Boundaries — LQ WLB
- Proposed Wetland Boundaries — WLB
- Existing Endangered Animal Boundaries — EAB
- Existing Endangered Plant Boundaries — EPB

BUILDINGS & OTHER CULTURE

- Buildings
- Foundations
- Area Outline
- Gate
- Gas Pump Vent or U/G Tank Cap
- Church
- School
- Park
- Cemetery
- Dam
- Sign — S
- Well — W
- Small Mine
- Swimming Pool

TOPOGRAPHY

- Loose Surface
- Hard Surface
- Change in Road Surface
- Curb
- Right of Way Symbol — R/W
- Guard Post — GP
- Paved Walk
- Bridge
- Box Culvert or Tunnel
- Ferry
- Culvert
- Footbridge
- Trail, Footpath
- Light House

VEGETATION

- Single Tree
- Single Shrub
- Hedge
- Woods Line
- Orchard
- Vineyard — VINEYARD

RAILROADS

- Standard Gauge — CSX TRANSPORTATION
- RR Signal Milepost — MILEPOST 35
- Switch — SWITCH

Ramey Kemp & Associates, Inc.
Transportation Consulting Engineers
4928-A Windy Hill Drive Raleigh, North Carolina 27609
(919) 872-5115 fax (919) 878-5416

5/28/99

PROJECT REFERENCE NO.	SHEET NO.
B-4199	1-C
Location and Surveys	

SURVEY CONTROL SHEET B-4199

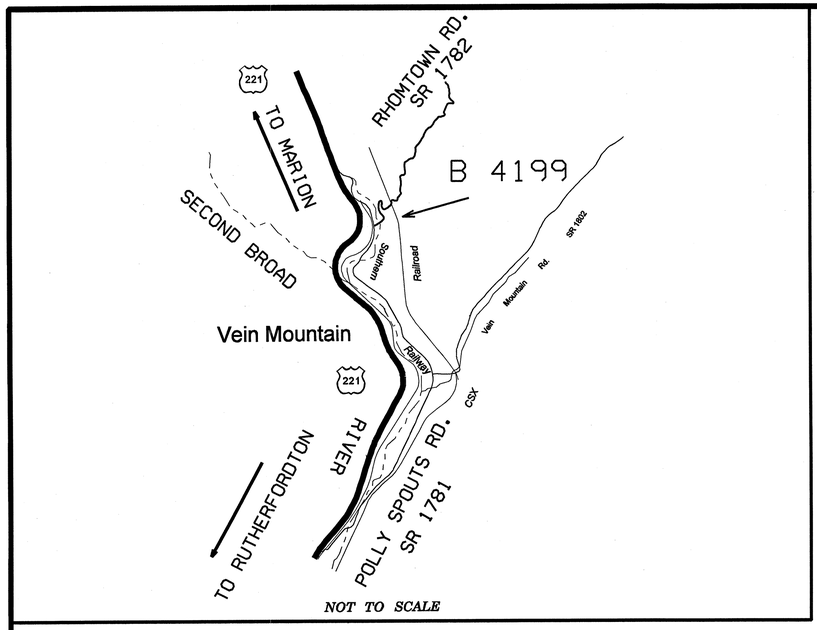

NOT TO SCALE

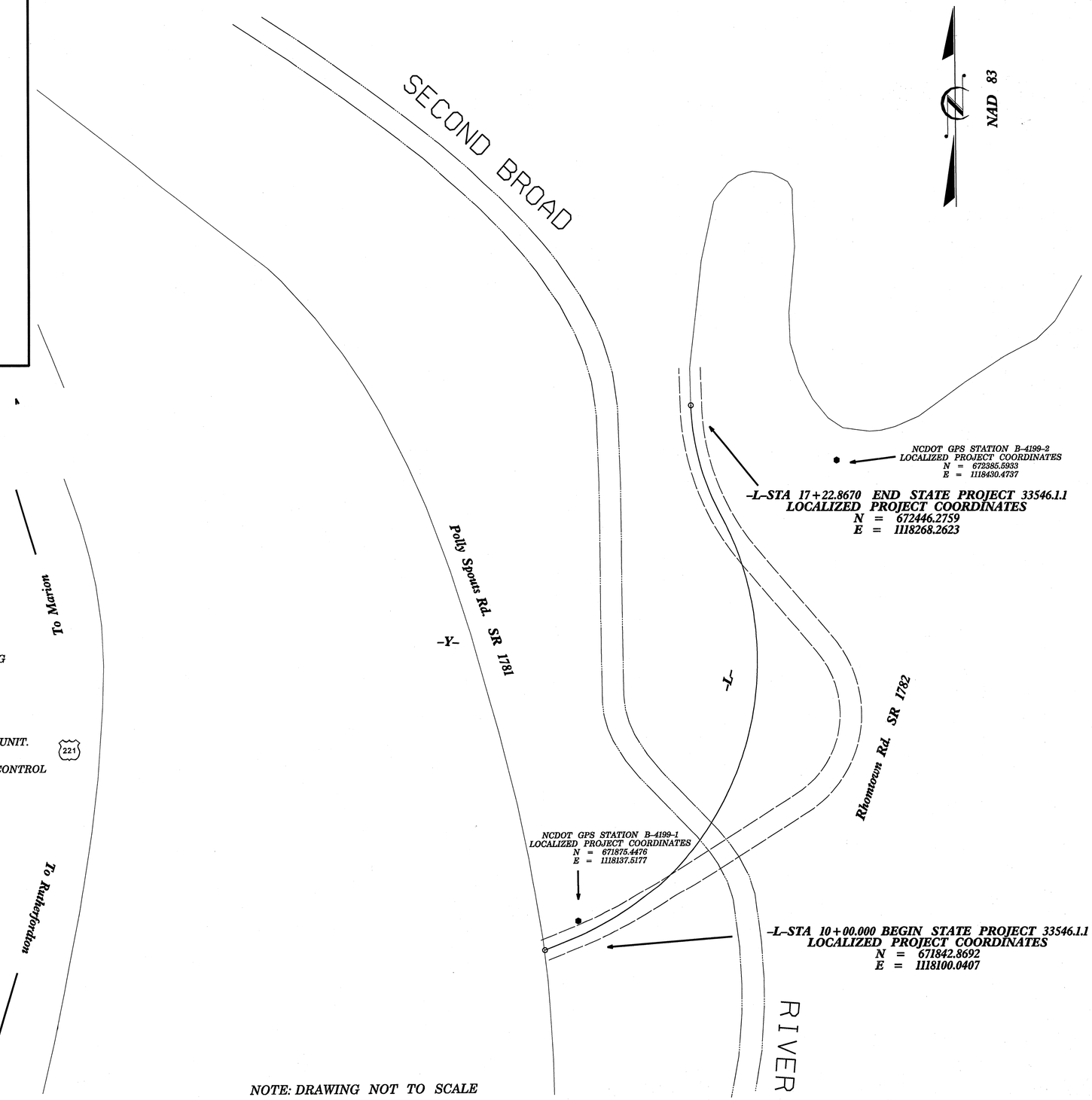

NOTE: DRAWING NOT TO SCALE

NOTES:

THE CONTROL DATA FOR THIS PROJECT CAN BE FOUND ELECTRONICALLY BY SELECTING PROJECT CONTROL DATA AT:

HTTP:\WWW.DOH.DOT.STATE.NC.US/PRECONSTRUCT/HIGHWAY/LOCATION/PROJECT B4199_LS_CONTROL_041102.TXT

SITE CALIBRATION INFORMATION HAS NOT BEEN PROVIDED FOR THIS PROJECT. IF FURTHER INFORMATION IS NEEDED, PLEASE CONTACT THE LOCATION AND SURVEYS UNIT.

● INDICATES GEODETIC CONTROL MONUMENTS USED OR SET FOR HORIZONTAL PROJECT CONTROL BY THE NCDOT LOCATION AND SURVEYS UNIT.

PROJECT CONTROL ESTABLISHED USING GLOBAL POSITIONING SYSTEM.
NETWORK ESTABLISHED FROM NGS ONLINE POSITIONING USER SERVICE (OPUS)

DATUM DESCRIPTION

THE LOCALIZED COORDINATE SYSTEM DEVELOPED FOR THIS PROJECT
IS BASED ON THE STATE PLANE COORDINATES ESTABLISHED BY
NCDOT FOR MONUMENT "GPS B4199-1"
WITH STATE PLANE GRID COORDINATES OF
NORTHING: 671875.4476(ft) EASTING: 1118137.5177(ft)
THE AVERAGE COMBINED GRID FACTOR USED ON THIS PROJECT
(GROUND TO GRID) IS: 0.999833592
THE N.C. LAMBERT GRID BEARING AND
LOCALIZED HORIZONTAL GROUND DISTANCE FROM
"GPS B4199-1" TO -L- STATION 10+00.00 IS
N 49° 00' 00" E 49.66'
ALL LINEAR DIMENSIONS ARE LOCALIZED HORIZONTAL DISTANCES
VERTICAL DATUM USED IS NAVD 88

PROJECT REFERENCE NO.	SHEET NO.
B-4199	1-D
Location and Surveys	

SURVEY CONTROL SHEET B-4199

BL

POINT	DESC.	NORTH	EAST	ELEVATION	L STATION	OFFSET
100	GPS B4199-1	671875.4476	1118137.5177	1088.03	10+47.71	15.90 LT
2		672038.0102	1118463.8821	1083.11	13+39.66	141.29 RT
3		672429.1844	1118257.7317	1095.24	17+06.77	11.53 LT

****
BM1 ELEVATION = 1096.32
N 671822 E 1118071
L STATION 10+00
S 54° 08' 59.5" W DIST 36.41
8" NAIL IN BASE OF 24" TULIP POPLAR
****
****
BM2 ELEVATION = 1095.10
N 672436 E 1118247
L STATION 17+14 22 LEFT
8" NAIL IN BASE OF 12" DOUBLE OAK
****

DATUM DESCRIPTION

THE LOCALIZED COORDINATE SYSTEM DEVELOPED FOR THIS PROJECT
IS BASED ON THE STATE PLANE COORDINATES ESTABLISHED BY
NCDOT FOR MONUMENT "GPS B4199-1"
WITH NAD 1983/95 STATE PLANE GRID COORDINATES OF
NORTHING: 671875.4476(ft) EASTING: 1118137.5177(ft)
THE AVERAGE COMBINED GRID FACTOR USED ON THIS PROJECT
(GROUND TO GRID) IS: 0.999833592
THE N.C. LAMBERT GRID BEARING AND
LOCALIZED HORIZONTAL GROUND DISTANCE FROM
"GPS B4199-1" TO -L- STATION 10+00.00 IS
N 49° 00' 00" E 49.66'
ALL LINEAR DIMENSIONS ARE LOCALIZED HORIZONTAL DISTANCES
VERTICAL DATUM USED IS NAVD 88

NOTES:

THE CONTROL DATA FOR THIS PROJECT CAN BE FOUND ELECTRONICALLY BY SELECTING PROJECT CONTROL DATA AT:

HTTP:\WWW.DOH.DOT.STATE.NC.US/PRECONSTRUCT/HIGHWAY/LOCATION/PROJECT

B4199_LS_CONTROL_041102.TXT

SITE CALIBRATION INFORMATION HAS NOT BEEN PROVIDED FOR THIS PROJECT.
IF FURTHER INFORMATION IS NEEDED, PLEASE CONTACT THE LOCATION AND SURVEYS UNIT.

PROJECT CONTROL ESTABLISHED USING GLOBAL POSITIONING SYSTEM.

NETWORK ESTABLISHED FROM NGS ONLINE POSITIONING USER SERVICE (OPUS)

BY THE NCDOT LOCATION AND SURVEYS UNIT.

PROJECT REFERENCE NO.	SHEET NO.
B-4199	2
ROADWAY DESIGN ENGINEER	PAVEMENT DESIGN ENGINEER

NORTH CAROLINA PROFESSIONAL SEAL 27771 ENGINEER MATTHEW B. COPPLE 2/22/06

NORTH CAROLINA PROFESSIONAL SEAL 22896 ENGINEER CLARK S. MORRISON 3/20/06

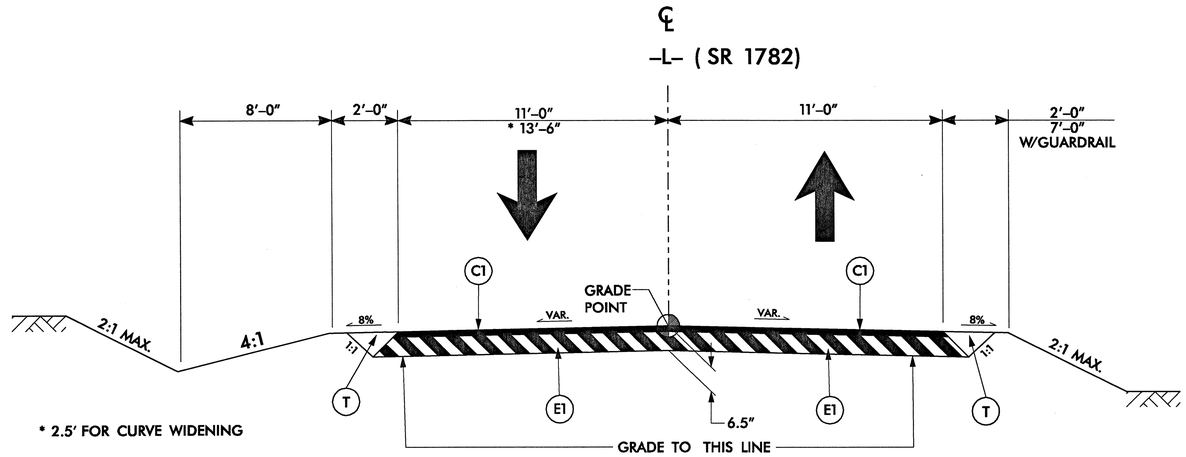

PAVEMENT SCHEDULE	
C1	PROP. APPROX. 2 1/2" ASPHALT CONCRETE SURFACE COURSE, TYPE SF9.5A, AT AN AVERAGE RATE OF 137.5 LBS. PER SQ. YD. IN EACH OF TWO LAYERS.
E1	PROP. APPROX. 4" ASPHALT CONCRETE BASE COURSE, TYPE B25.0B, AT AN AVERAGE RATE OF 456 LBS. PER SQ. YD.
T	EARTH MATERIAL.

NOTE: PAVEMENT EDGE SLOPES ARE 1:1 UNLESS SHOWN OTHERWISE.

USE TYPICAL SECTION NO. 1

-L- STA. 10+09.47 TO STA. 12+75.25 (BEGIN BRIDGE)
-L- STA. 13+85.25 (END BRIDGE) TO STA. 16+50.00

TYPICAL SECTION NO. 1

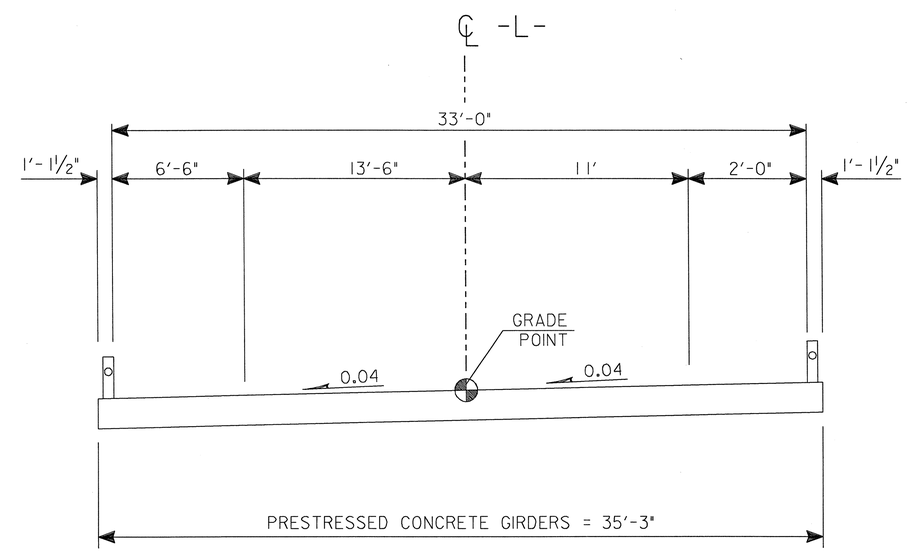

STRUCTURE DETAIL

Ramey Kemp & Associates, Inc.
Transportation Consulting Engineers
4928-A Windy Hill Drive Raleigh, North Carolina 27609
(919) 872-5115 fax (919) 878-5416

6/2/99
$$$$SYSTIME$$$$
$$$$USERNAME$$$$
$$$$DGN$$$$

PROJECT REFERENCE NO.	SHEET NO.
B-4199	2-A
ROADWAY DESIGN ENGINEER	HYDRAULICS ENGINEER

NORTH CAROLINA PROFESSIONAL SEAL 9334 ENGINEER W. HENRY WELLS, JR.
11/14/06

LOCATIONS (AT OUTLET)
Sta 13+75 -L- (RT)

B	4.0	ft
D	1.5	ft
W	5	ft
d	0.5	ft

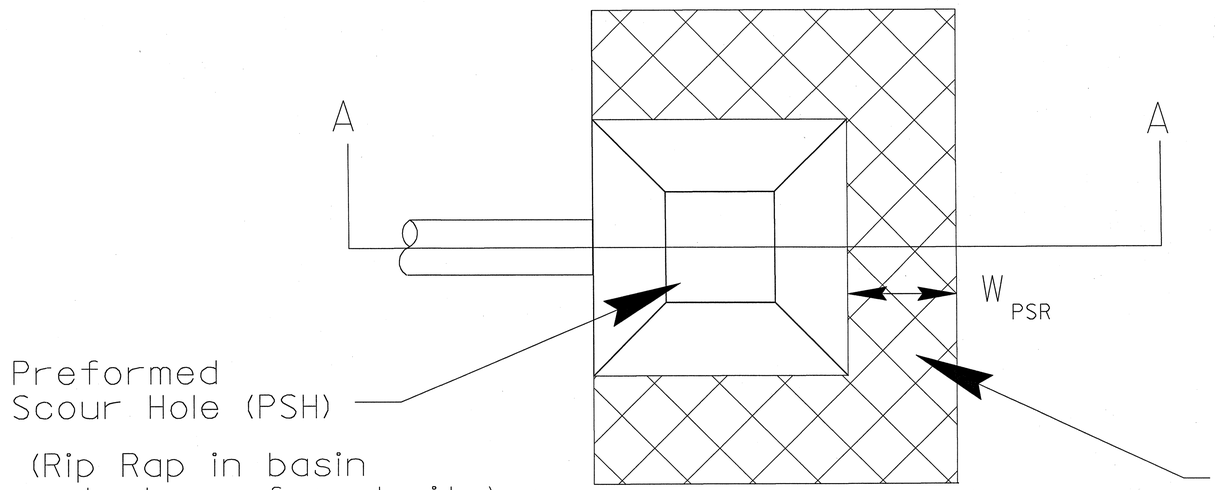

Section A-A

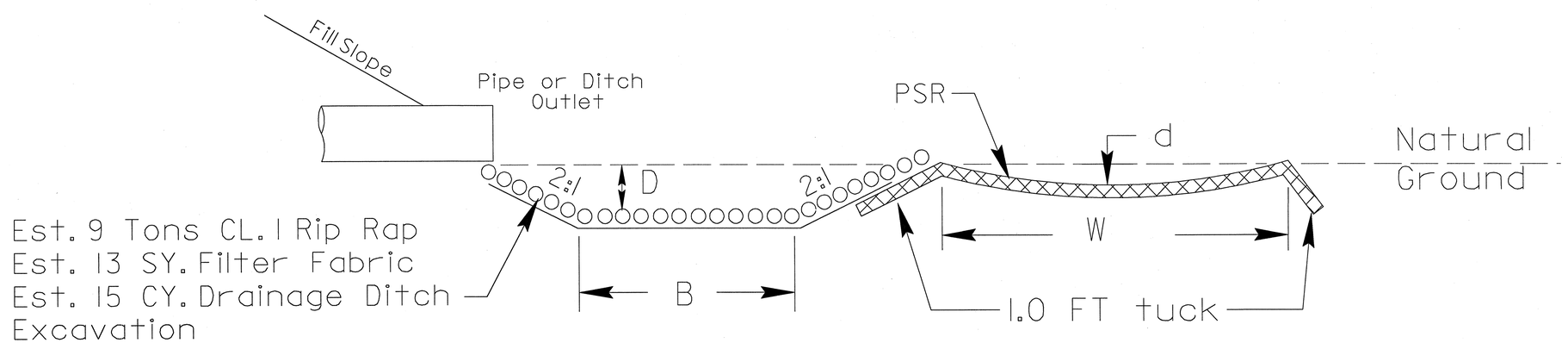

NOTE: The Permanent Soil Reinforcement matting (PSR) shall be seeded with native grasses at installation.

NOTE: "B" denotes size of basin;
For example: 5.0ft.x 5.0ft. PSH, B=5.0

PREFORMED SCOUR HOLE
DETAIL

SUNGATE DESIGN GROUP, P.A.
915 JONES FRANKLIN ROAD
RALEIGH, NORTH CAROLINA 27606
TEL (919) 859-2243 FAX (919) 859-8258

Ramey Kemp & Associates, Inc.
Transportation Consulting Engineers
4928-A Windy Hill Drive Raleigh, North Carolina 27609
(919) 872-5115 fax (919) 878-5416

PROJECT REFERENCE NO.	SHEET NO.
B-4199	2-B

STATE OF
NORTH CAROLINA
DEPT. OF TRANSPORTATION
DIVISION OF HIGHWAYS
RALEIGH, N.C.

ENGLISH DETAIL DRAWING FOR
MODIFIED CONCRETE FLUME
WITH CONCRETE OR RIP-RAP DITCH

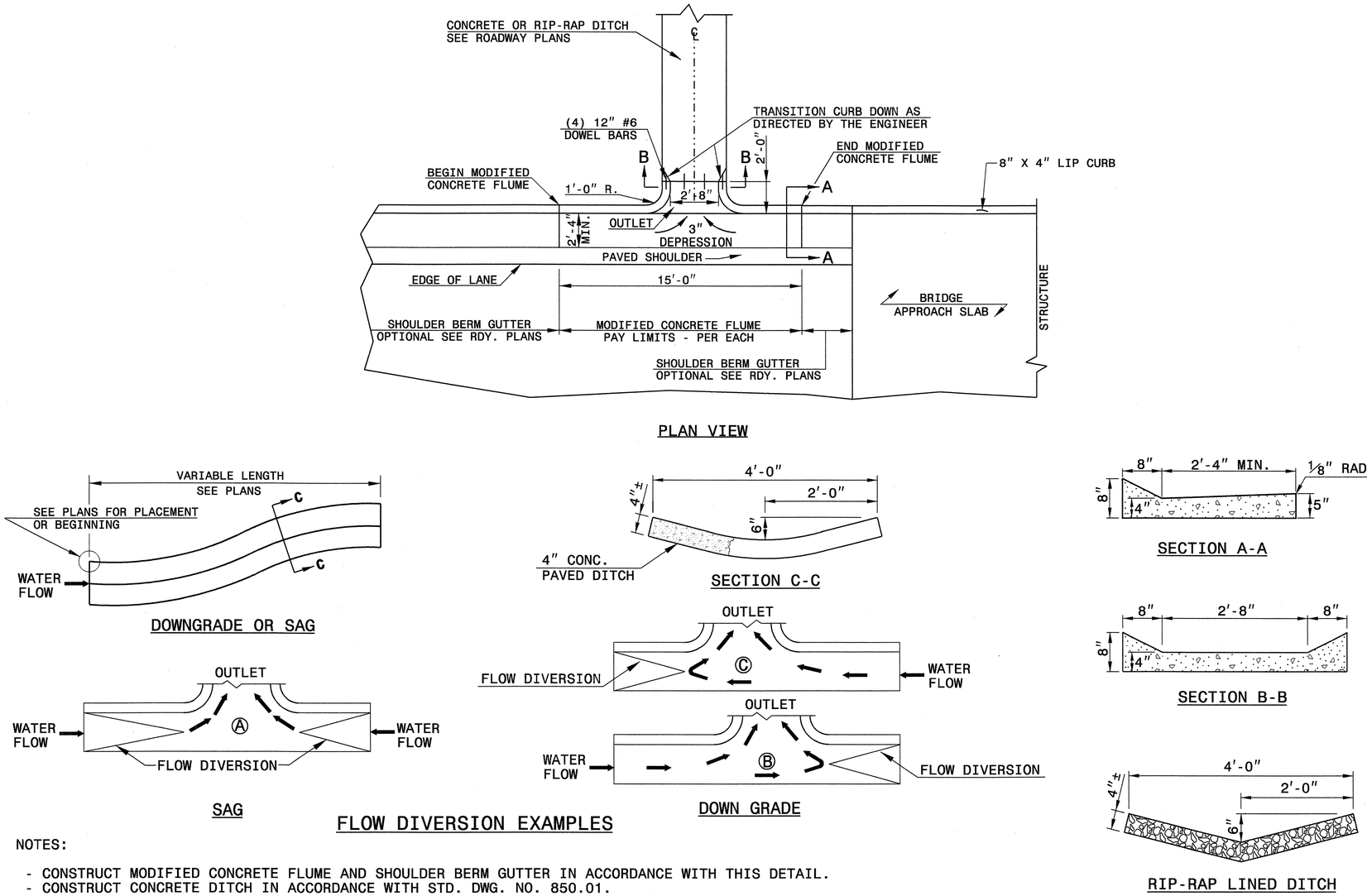

FLOW DIVERSION EXAMPLES

NOTES:

- CONSTRUCT MODIFIED CONCRETE FLUME AND SHOULDER BERM GUTTER IN ACCORDANCE WITH THIS DETAIL.
- CONSTRUCT CONCRETE DITCH IN ACCORDANCE WITH STD. DWG. NO. 850.01.
- CONSTRUCT RIP RAP LINED DITCH IN ACCORDANCE WITH THIS DETAIL, IF CALLED FOR IN PLANS.
- CONCRETE OR RIP RAP LINED DITCH SHALL BE THE TYPE AND LENGTH SPECIFIED BY THE ROADWAY PLANS. THE DITCH SHALL TERMINATE AS SHOWN ON THE PLANS. IF NO TERMINATION IS INDICATED PLACE RIP-RAP AT THE END OF THE DITCH AS INDICATED BY STD. DWG. 876.02 FOR AN 18" PIPE. TRANSITIONS FROM THE DITCH TO TERMINATION SHALL BE AS DIRECTED BY THE ENGINEER.
- MODIFICATIONS SHALL BE AS DICTATED BY SITE CONDITIONS AND DIRECTED BY THE ENGINEER.

SHEET 1 OF 1
MODFLMDTCH

STATE OF
NORTH CAROLINA
DEPT. OF TRANSPORTATION
DIVISION OF HIGHWAYS
RALEIGH, N.C.

ENGLISH DETAIL DRAWING FOR
MODIFIED CONCRETE FLUME
WITH CONCRETE OR RIP-RAP DITCH

SHEET 1 OF 1
MODFLMDTCH

PROJECT SERVICES UNIT
STANDARDS AND SPECIAL DESIGN
Office 919-250-4128 FAX 919-250-4119

SEE PLATE FOR TITLE

ORIGINAL BY: E.E. Ward DATE: Apr. 2002
MODIFIED BY: E.E. Ward DATE: July 2004
CHECKED BY: [signature] DATE: 3/1/06
FILE SPEC.: v:details\stand\modifiedflume.dgn

01-MAR-2006 08:47
S:\Contracts\Contracts\Special Details\ericward\usr\details\stand\modifiedflume.dgn
ericward AT PS222293

28-SEP-2005 15:30
S:\Contracts\Contracts\Special Details\ericward\stds\02' Stds to Special Details\english\422D10\0422d10.dgn
ericward AT PS222293

STATE OF NORTH CAROLINA
DEPT. OF TRANSPORTATION
DIVISION OF HIGHWAYS
RALEIGH, N.C.

ENGLISH DETAIL DRAWING FOR
REINFORCED BRIDGE APPROACH FILLS
15' MINIMUM APPROACH SLAB

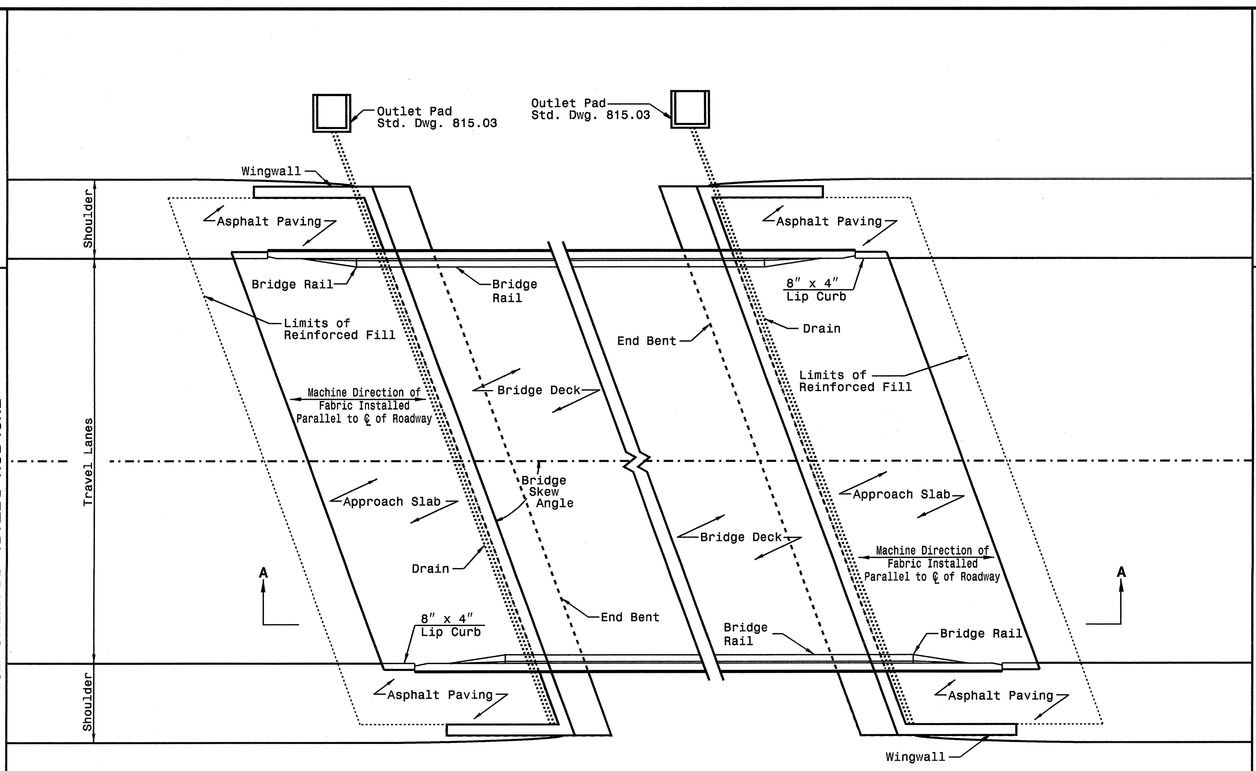

PLAN VIEW
15' MINIMUM APPROACH SLAB

SHEET 1 OF 7
422D10

STATE OF NORTH CAROLINA
DEPT. OF TRANSPORTATION
DIVISION OF HIGHWAYS
RALEIGH, N.C.

ENGLISH DETAIL DRAWING FOR
REINFORCED BRIDGE APPROACH FILLS
15' MINIMUM APPROACH SLAB

SHEET 1 OF 7
422D10

STATE OF NORTH CAROLINA
DEPT. OF TRANSPORTATION
DIVISION OF HIGHWAYS
RALEIGH, N.C.

ENGLISH DETAIL DRAWING FOR
REINFORCED BRIDGE APPROACH FILLS
PRESTRESSED AND PLATE GIRDER BRIDGES
15' MINIMUM APPROACH SLAB

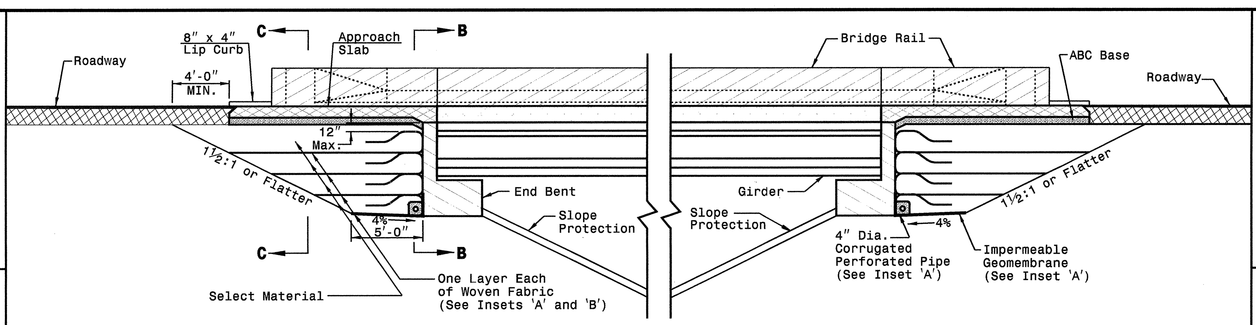

SECTION A-A

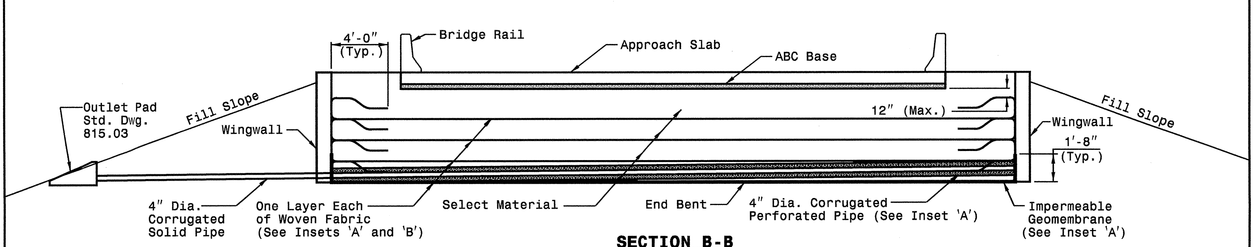

SECTION B-B

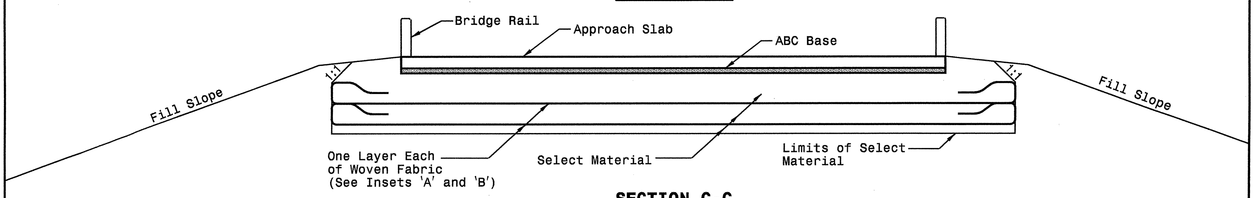

SECTION C-C

15' MINIMUM APPROACH SLAB

SHEET 2 OF 7
422D10

STATE OF NORTH CAROLINA
DEPT. OF TRANSPORTATION
DIVISION OF HIGHWAYS
RALEIGH, N.C.

ENGLISH DETAIL DRAWING FOR
REINFORCED BRIDGE APPROACH FILLS
PRESTRESSED AND PLATE GIRDER BRIDGES
15' MINIMUM APPROACH SLAB

SHEET 2 OF 7
422D10

PROJECT SERVICES UNIT
STANDARDS AND SPECIAL DESIGN
Office 919-250-4128 FAX 919-250-4119

SEE PLATE FOR TITLE

ORIGINAL BY: 2002 STANDARDS DATE: 01-15-02
MODIFIED BY: E.E. WARD DATE: 09-28-05
CHECKED BY: [signature] DATE: 9/29/05
FILE SPEC.: stds/02stdstodetails/english/422d10.dgn

3/22/06

PROJECT REFERENCE NO. B-4199
SHEET NO. 2-C

28-SEP-2005 15:31
S:\Contracts\Contracts\Special Details\ericward\stds\02' Stds to Special Details\english\422l0\0422d10.dgn
.ericward AT PS222243

STATE OF NORTH CAROLINA
DEPT. OF TRANSPORTATION
DIVISION OF HIGHWAYS
RALEIGH, N.C.

ENGLISH DETAIL DRAWING FOR
REINFORCED BRIDGE APPROACH FILLS
CORED SLAB BRIDGES
15' MINIMUM APPROACH SLAB

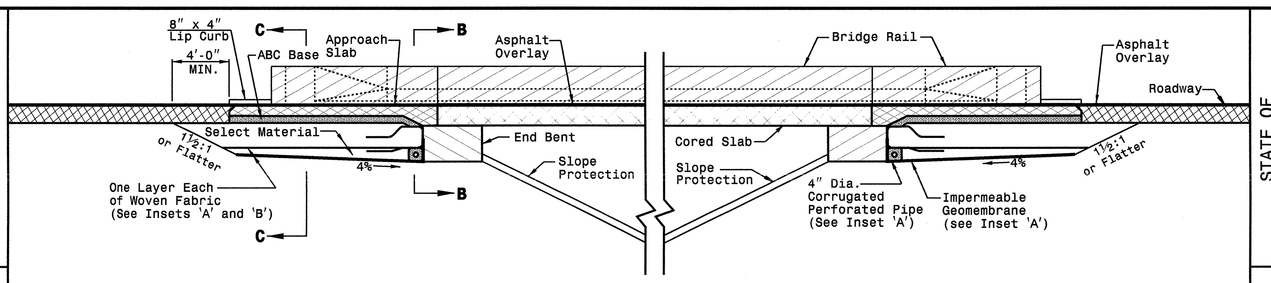

SECTION A-A

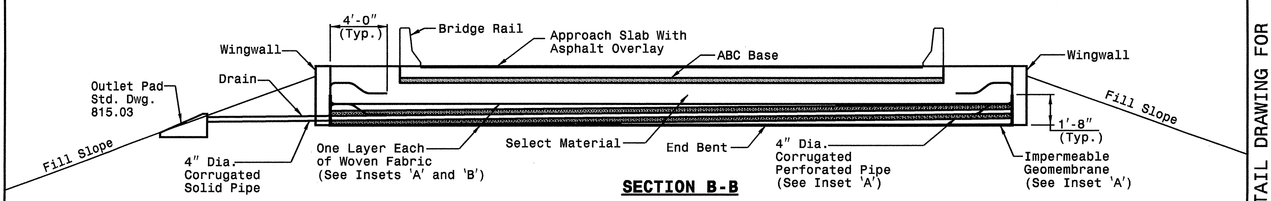

SECTION B-B

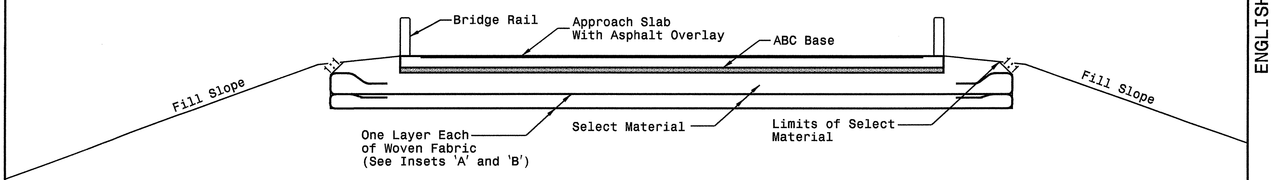

SECTION C-C

15' MINIMUM APPROACH SLAB

SHEET 3 OF 7
422D10

STATE OF NORTH CAROLINA
DEPT. OF TRANSPORTATION
DIVISION OF HIGHWAYS
RALEIGH, N.C.

ENGLISH DETAIL DRAWING FOR
REINFORCED BRIDGE APPROACH FILLS
25' MINIMUM APPROACH SLAB

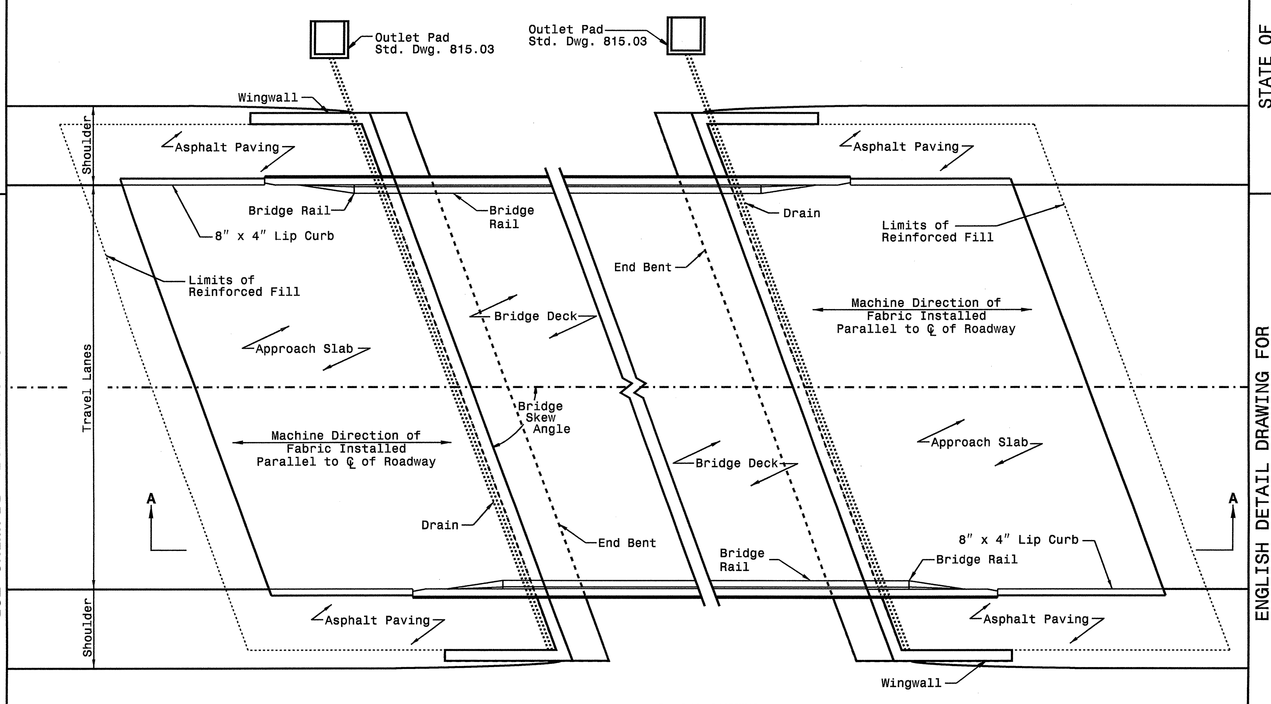

PLAN VIEW
25' MINIMUM APPROACH SLAB

SHEET 4 OF 7
422D10

PROJECT SERVICES UNIT
STANDARDS AND SPECIAL DESIGN
Office 919-250-4128 FAX 919-250-4119

SEE PLATE FOR TITLE

ORIGINAL BY: 2002 STANDARDS DATE: 01-15-02
MODIFIED BY: E.E. WARD DATE: 09-28-05
CHECKED BY: DATE: 4/24/15
FILE SPEC.: stds/02stdstodetails/english/422d10.dgn

PROJECT REFERENCE NO. B-4199
SHEET NO. 2-D

20-SEP-2005 08:49
S:\Contracts\Contracts\Special Details\ericward\stds\02' Stds to Special Details\english\42210\0422d10.dgn
ericward AT PS222293

STATE OF NORTH CAROLINA
DEPT. OF TRANSPORTATION
DIVISION OF HIGHWAYS
RALEIGH, N.C.

ENGLISH DETAIL DRAWING FOR
REINFORCED BRIDGE APPROACH FILLS
PRESTRESSED AND PLATE GIRDER BRIDGES
25' MINIMUM APPROACH SLAB

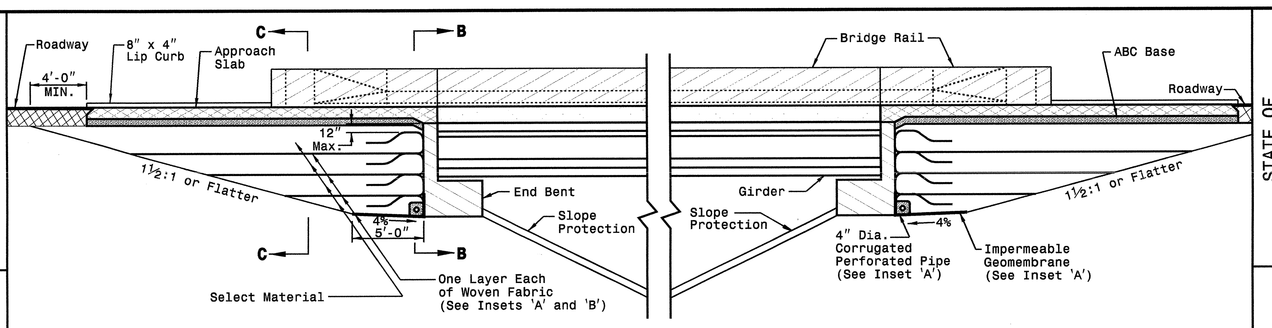

SECTION A-A

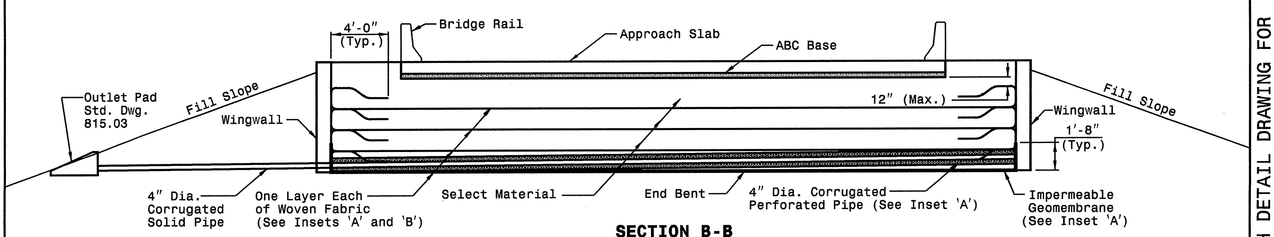

SECTION B-B

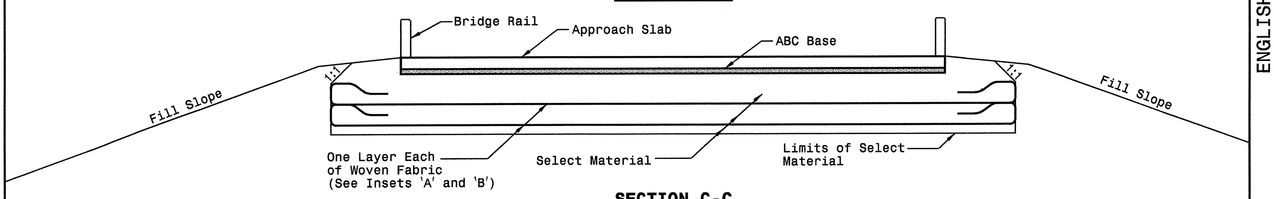

SECTION C-C

25' MINIMUM APPROACH SLAB

SHEET 5 OF 7
422D10

STATE OF NORTH CAROLINA
DEPT. OF TRANSPORTATION
DIVISION OF HIGHWAYS
RALEIGH, N.C.

ENGLISH DETAIL DRAWING FOR
REINFORCED BRIDGE APPROACH FILLS
CORED SLAB BRIDGES
25' MINIMUM APPROACH SLAB

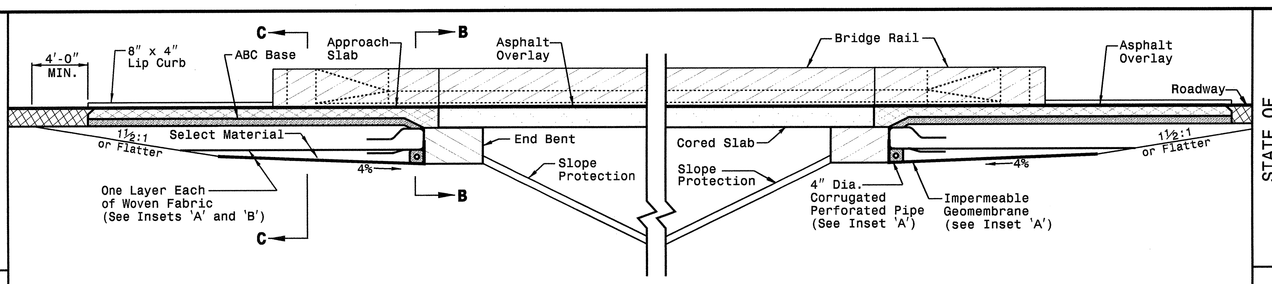

SECTION A-A

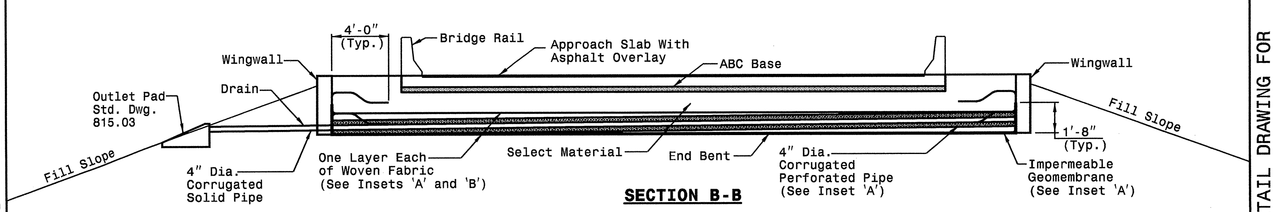

SECTION B-B

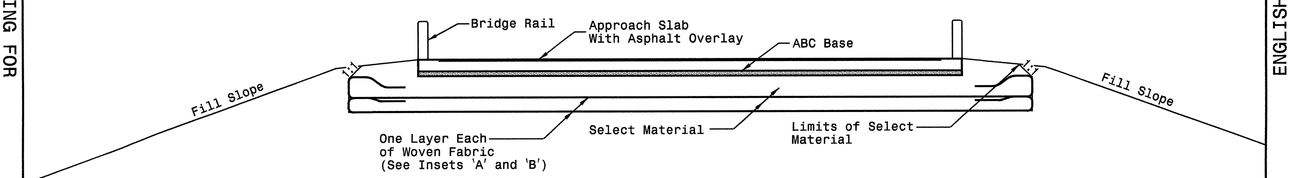

SECTION C-C

25' MINIMUM APPROACH SLAB

SHEET 6 OF 7
422D10

PROJECT SERVICES UNIT
STANDARDS AND SPECIAL DESIGN
Office 919-250-4128 FAX 919-250-4119

SEE PLATE FOR TITLE

ORIGINAL BY: 2002 STANDARDS DATE: 01-15-02
MODIFIED BY: E.E. WARD DATE: 09-12-05
CHECKED BY: DATE: 9/26/05
FILE SPEC.: stds/02stdtodetails/english/422d10.dgn

PROJECT REFERENCE NO. B-4199
SHEET NO. 2-E

20-SEP-2005 08:49
S:\Contracts\Contracts\Special Details\ericward\stds\02' Stds to Special Details\english\42210\0422d10.dgn
ericward AT PS222293

STATE OF NORTH CAROLINA
DEPT. OF TRANSPORTATION
DIVISION OF HIGHWAYS
RALEIGH, N.C.

ENGLISH DETAIL DRAWING FOR
REINFORCED BRIDGE APPROACH FILLS
INSETS AND CHARTS

SHEET 7 OF 7
422D10

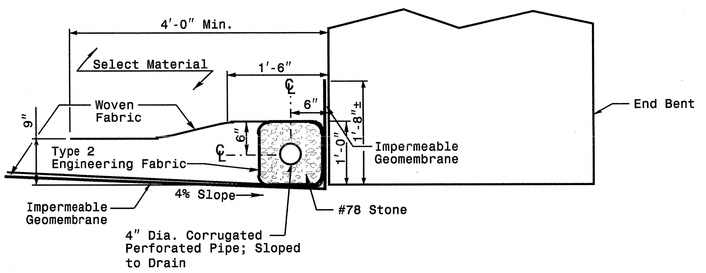

Cored Slab Bridge
Showing First Lift and Drains

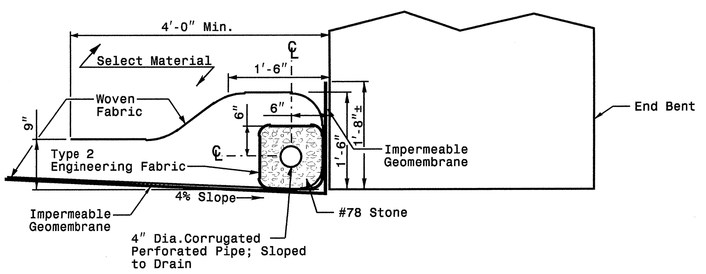

Girder Bridge
Showing First Lift and Drains

Inset 'A'

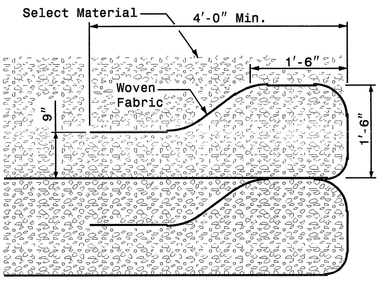

Typical Fabric Lift and Wrap
Showing Second and Above Lifts

Inset 'B'

Height of Backwall	Number of Fabric Layers
4'-6" - 5'-9"	3
5'-10" - 7'-2"	4
7'-3" - 8'-8"	5
8'-9" - 10'-1"	6
10'-2" - 11'-8"	7

Note: Cored Slab Structures Require 2 Fabric Layers.

Length of Bridge End Bent Inside Wingwalls
If Bridge Skew is Less Than or Equal to 90°: $\frac{\text{(Roadway Width + 7'-0")}}{\text{Sin (Bridge Skew Angle)}}$ = Dis. Between Wingwalls
If Bridge Skew is Greater Than 90°: $\frac{\text{(Roadway Width + 7'-0")}}{\text{Cos (Bridge Skew Angle - 90°)}}$ = Dis. Between Wingwalls

STATE OF NORTH CAROLINA
DEPT. OF TRANSPORTATION
DIVISION OF HIGHWAYS
RALEIGH, N.C.

ENGLISH DETAIL DRAWING FOR
REINFORCED BRIDGE APPROACH FILLS
INSETS AND CHARTS

SHEET 7 OF 7
422D10

PROJECT SERVICES UNIT
STANDARDS AND SPECIAL DESIGN
Office 919-250-4128 FAX 919-250-4119

SEE PLATE FOR TITLE

ORIGINAL BY: 2002 STANDARDS DATE: 01-15-02
MODIFIED BY: E.E. WARD DATE: 09-12-05
CHECKED BY: [signature] DATE: 9/20/05
FILE SPEC.: stds/02stdstodetails/english/422d10.dgn

3/22/06

PROJECT REFERENCE NO. B-4199
SHEET NO. 2-F

19-OCT-2004 11:38
W:\Special Details\ericward\stds\02' Stds to Special Details\english\86202\0862d02.dgn
ericward AT DS212260

STATE OF NORTH CAROLINA
DEPT. OF TRANSPORTATION
DIVISION OF HIGHWAYS
RALEIGH, N.C.

ENGLISH DETAIL DRAWING FOR
GUARDRAIL INSTALLATION

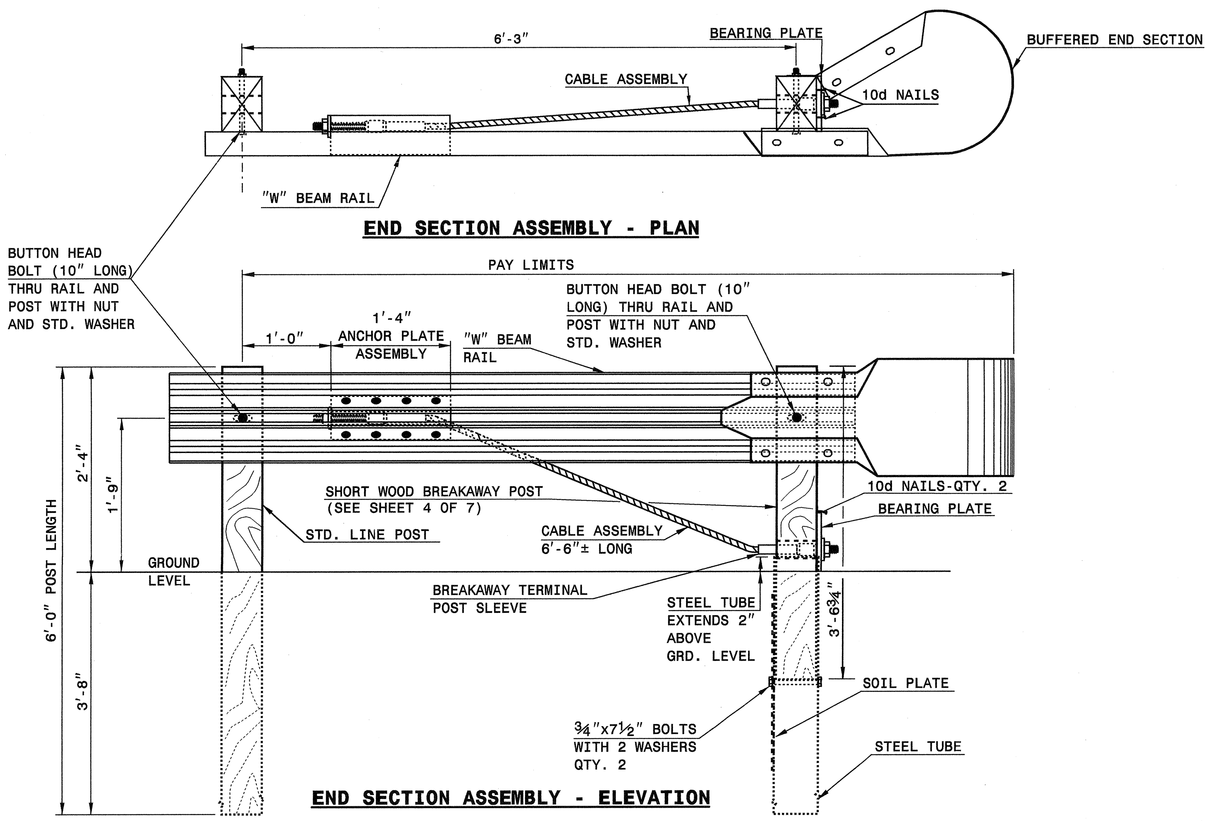

C.A.T.-1 SYSTEM

SHEET 1 OF 7
862D02

STATE OF NORTH CAROLINA
DEPT. OF TRANSPORTATION
DIVISION OF HIGHWAYS
RALEIGH, N.C.

ENGLISH DETAIL DRAWING FOR
GUARDRAIL INSTALLATION

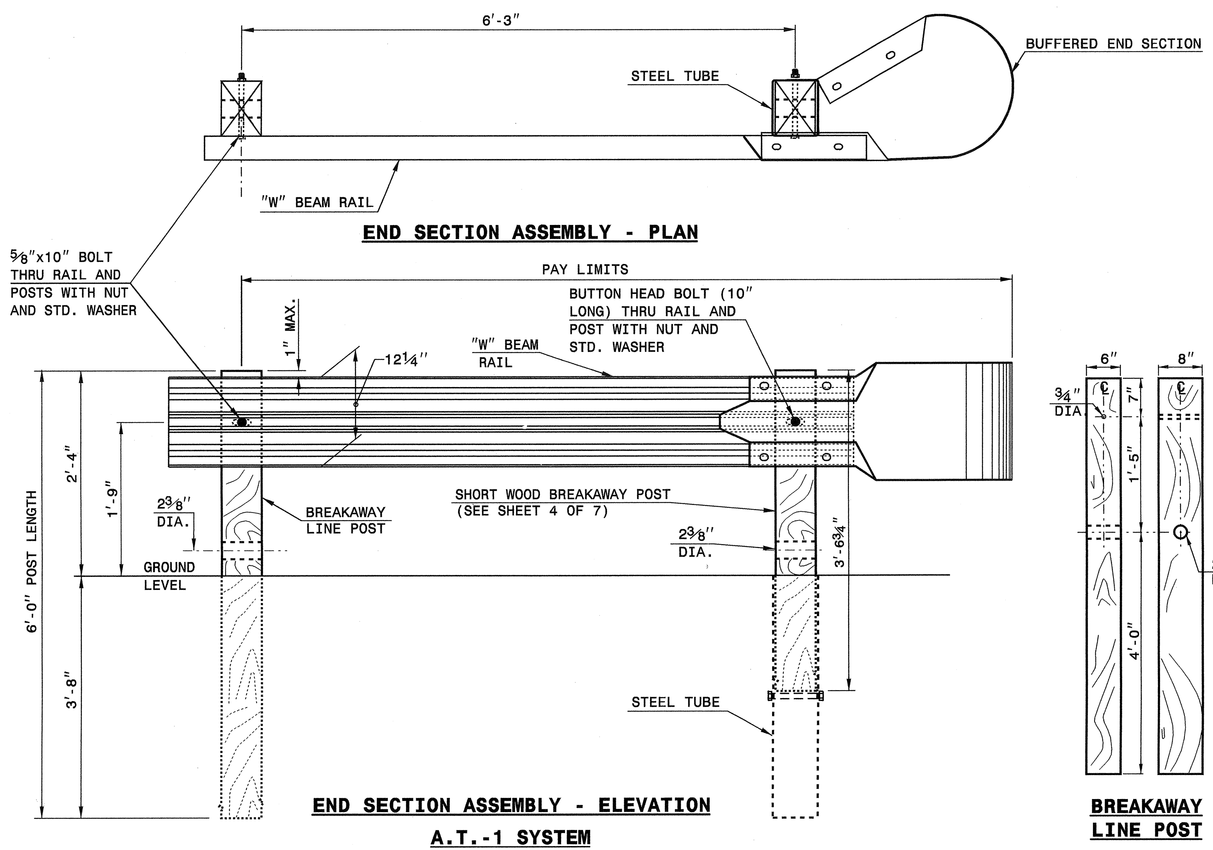

A.T.-1 SYSTEM

BREAKAWAY LINE POST

SHEET 2 OF 7
862D02

STATE OF NORTH CAROLINA
DEPT. OF TRANSPORTATION
DIVISION OF HIGHWAYS
RALEIGH, N.C.

ENGLISH DETAIL DRAWING FOR
GUARDRAIL INSTALLATION

PROJECT SERVICES UNIT
STANDARDS AND SPECIAL DESIGN
Office 919-250-4128 FAX 919-250-4119

SEE PLATE FOR TITLE

ORIGINAL BY: 2002 STD. 862.02 DATE:
MODIFIED BY: E.E. WARD DATE: 02-09-03
CHECKED BY: [signature] DATE: 10/21/04
FILE SPEC.: [illegible]/stds/02todetail/english/86202/862d02.dgn

PROJECT REFERENCE NO. B-4199
SHEET NO. 2-G

19-OCT-2004 11:39
W:\Special Details\ericward\stds\02' Stds to Special Details\english\86202\0862d02.dgn
ericward AT DS212260

STATE OF NORTH CAROLINA
DEPT. OF TRANSPORTATION
DIVISION OF HIGHWAYS
RALEIGH, N.C.

ENGLISH DETAIL DRAWING FOR
GUARDRAIL INSTALLATION

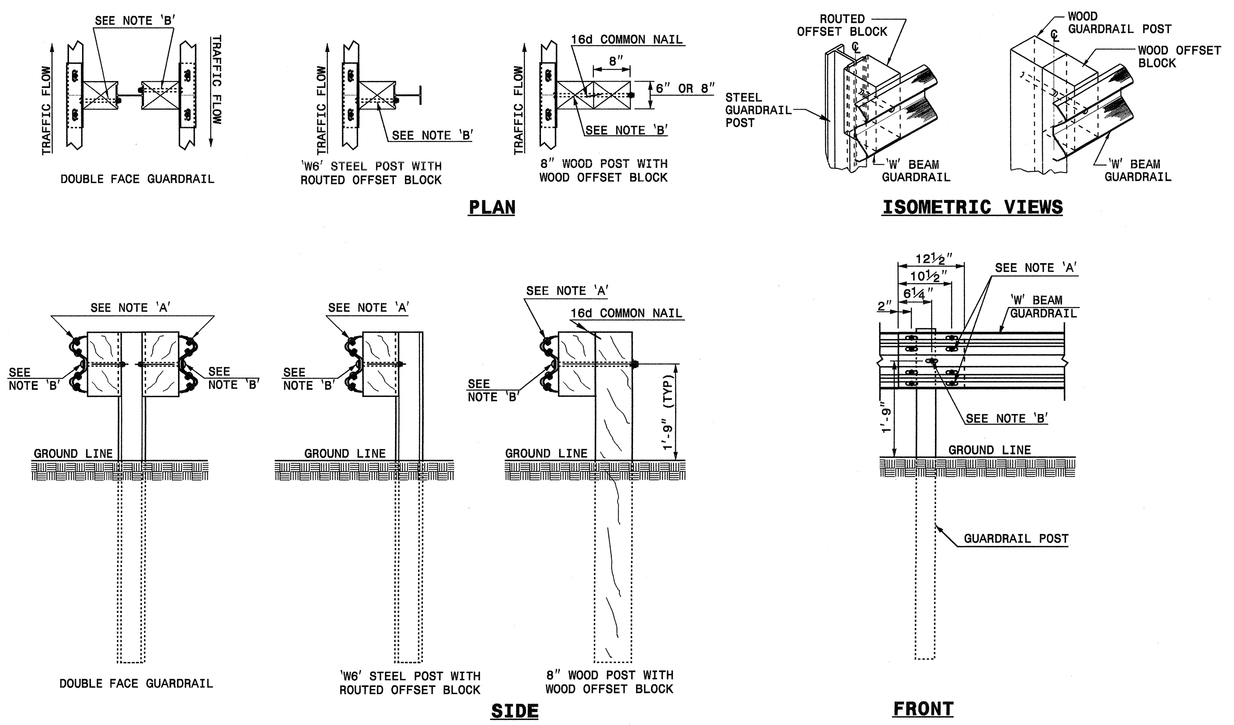

NOTES:
A - ⅝" DIA. BUTTON HEAD SPLICE BOLT 1¼" LONG (8 REQ. PER SPLICE JOINT).
B - ⅝" DIA. BUTTON HEAD BOLT 7½"/9" LONG WITH NUT FOR BOLTING 6"/8" ROUTED OFFSET BLOCK TO STEEL POSTS OR
⅝" DIA. BUTTON HEAD BOLT 18" LONG WITH STD. WASHER UNDER NUT FOR BOLTING TO WOOD POSTS (1 REQ. PER LOCATION)
C - FIELD PUNCHING OF HOLES INTO GUARDRAIL SHALL BE AS DIRECTED BY THE ENGINEER.

TYPICAL GUARDRAIL AND GUARDRAIL POST ALTERNATIVES

SHEET 3 OF 7
862D02

STATE OF NORTH CAROLINA
DEPT. OF TRANSPORTATION
DIVISION OF HIGHWAYS
RALEIGH, N.C.

ENGLISH DETAIL DRAWING FOR
GUARDRAIL INSTALLATION

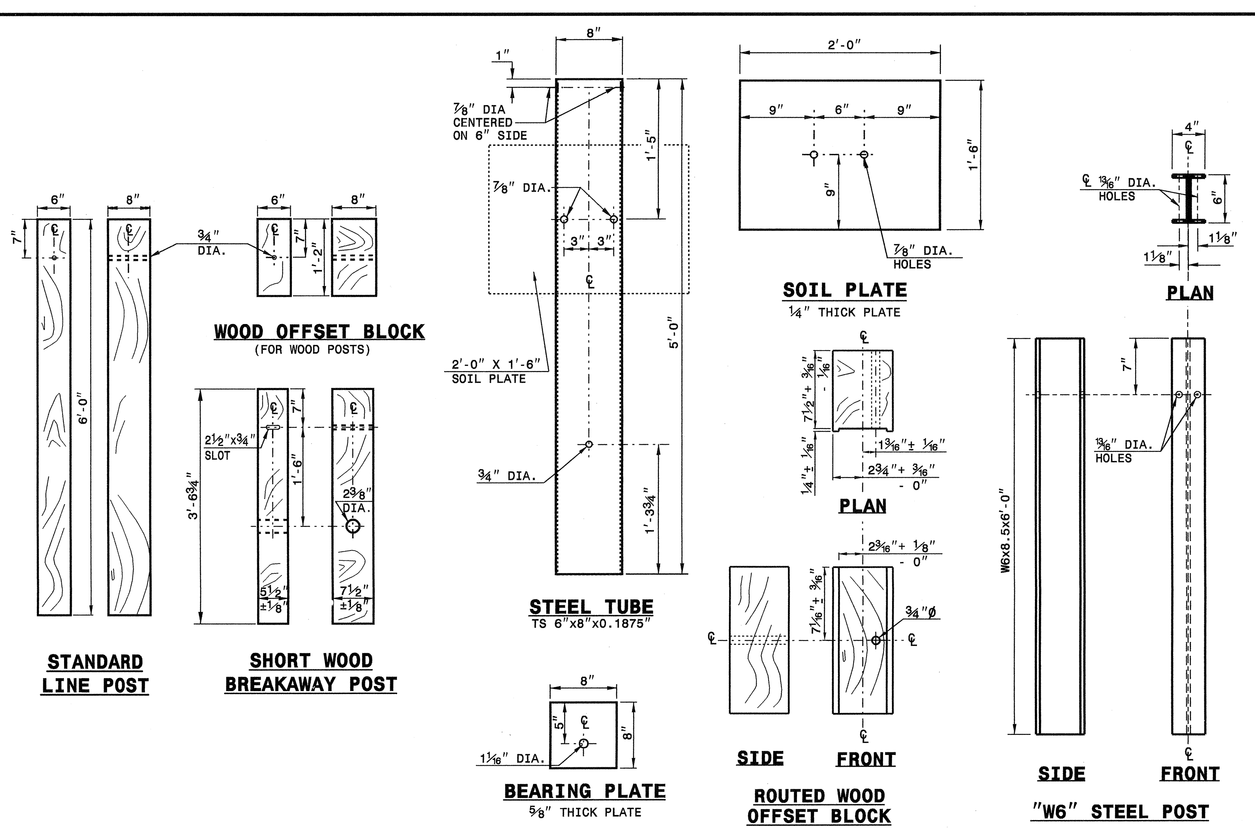

SYSTEM PARTS

SHEET 4 OF 7
862D02

STATE OF NORTH CAROLINA
DEPT. OF TRANSPORTATION
DIVISION OF HIGHWAYS
RALEIGH, N.C.

ENGLISH DETAIL DRAWING FOR
GUARDRAIL INSTALLATION

PROJECT SERVICES UNIT
STANDARDS AND SPECIAL DESIGN
Office 919-250-4128 FAX 919-250-4119

SEE PLATE FOR TITLE

ORIGINAL BY: 2002 STD. 862.02 DATE:
MODIFIED BY: E.E. WARD DATE: 02-09-03
CHECKED BY: [signature] DATE: 10/21/04
FILE SPEC.: /usr/stds/02todetail/english/86202/862d02.dgn

PROJECT REFERENCE NO. B-4199
SHEET NO. 2-H

STATE OF NORTH CAROLINA
DEPT. OF TRANSPORTATION
DIVISION OF HIGHWAYS
RALEIGH, N.C.

ENGLISH DETAIL DRAWING FOR
GUARDRAIL INSTALLATION

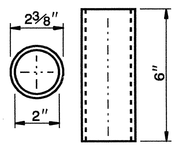

BREAKAWAY TERMINAL POST SLEEVE

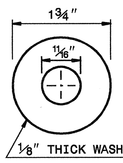

DETAIL OF STANDARD WASHER

STANDARD WASHER: TYPICAL USE UNDER NUT WITH WOOD POST

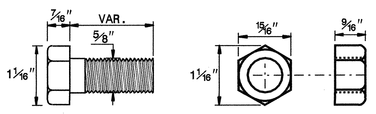

DETAIL OF STANDARD HEX BOLT AND NUT

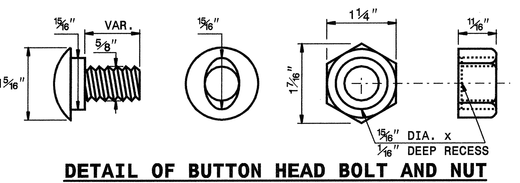

DETAIL OF BUTTON HEAD BOLT AND NUT

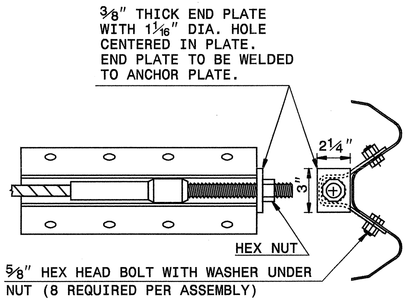

ANCHOR PLATE ASSEMBLY

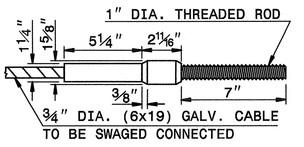

SWAGED CABLE

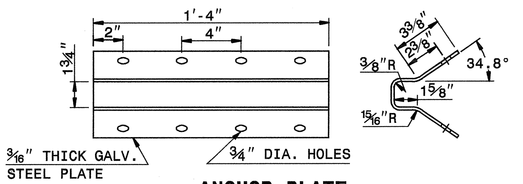

ANCHOR PLATE

CABLE ASSEMBLY

SHEET 5 OF 7
862D02

SYSTEM PARTS

STATE OF NORTH CAROLINA
DEPT. OF TRANSPORTATION
DIVISION OF HIGHWAYS
RALEIGH, N.C.

ENGLISH DETAIL DRAWING FOR
GUARDRAIL INSTALLATION

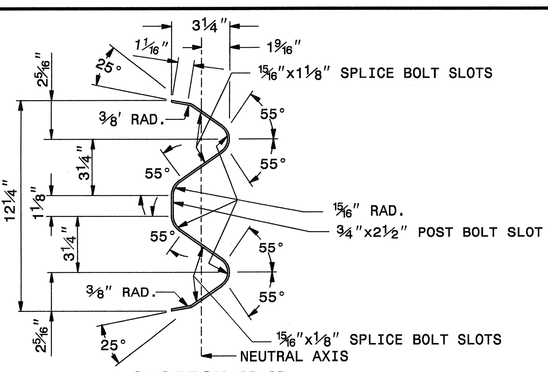

SECTION X-X

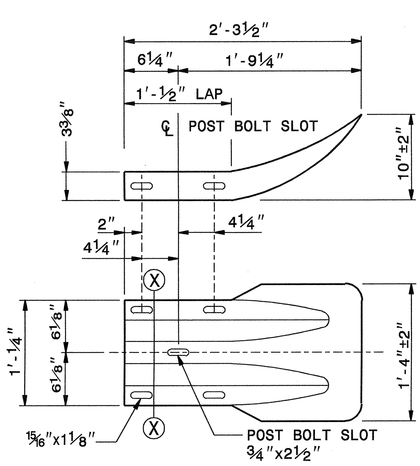

TERMINAL END SECTION

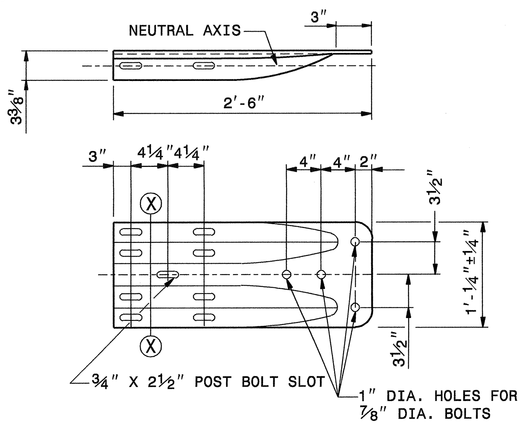

TYPICAL END SHOE

SHEET 6 OF 7
862D02

SYSTEM PARTS - GENERAL USE

STATE OF NORTH CAROLINA
DEPT. OF TRANSPORTATION
DIVISION OF HIGHWAYS
RALEIGH, N.C.

ENGLISH DETAIL DRAWING FOR
GUARDRAIL INSTALLATION

PROJECT SERVICES UNIT
STANDARDS AND SPECIAL DESIGN
Office 919-250-4128 FAX 919-250-4119

SEE PLATE FOR TITLE

ORIGINAL BY: 2002 STD. 862.02 DATE:
MODIFIED BY: E.E. WARD DATE: 02-09-03
CHECKED BY: DATE: 10/21/04
FILE SPEC.: /DST/stds/02/rdetail/english/86202/862d02.dgn

PROJECT REFERENCE NO. B-4199
SHEET NO. 2-1

PROJECT REFERENCE NO.	SHEET NO.
B-4199	2-J

STATE OF
NORTH CAROLINA
DEPT. OF TRANSPORTATION
DIVISION OF HIGHWAYS
RALEIGH, N.C.

ENGLISH DETAIL DRAWING FOR
GUARDRAIL INSTALLATION

SHEET 7 OF 7
862D02

STATE OF
NORTH CAROLINA
DEPT. OF TRANSPORTATION
DIVISION OF HIGHWAYS
RALEIGH, N.C.

ENGLISH DETAIL DRAWING FOR
GUARDRAIL INSTALLATION

SHEET 7 OF 7
862D02

19-OCT-2004 11:39
W:\Special Details\ericward\stds\02 Stds to Special Details\english\86202\0862d02.dgn
ericward AT DS212260

PROJECT SERVICES UNIT
STANDARDS AND SPECIAL DESIGN
Office 919-250-4128 FAX 919-250-4119

SEE PLATE FOR TITLE

ORIGINAL BY: 2002 STD.862.02 DATE:
MODIFIED BY: E.E. WARD DATE: 02-09-03
CHECKED BY: DATE: 10/21/04
FILE SPEC.: /usr/stds/02todetail/english/86202/862d02.dgn

21-SEP-2005 09:34
S:\Contracts\Contracts\Special Details\ericward\stds\02' Stds to Special Details\english\862D3\0862d03.dgn
ericward AT FS222243

STATE OF NORTH CAROLINA
DEPT. OF TRANSPORTATION
DIVISION OF HIGHWAYS
RALEIGH, N.C.

ENGLISH DETAIL DRAWING FOR
STRUCTURE ANCHOR UNITS
GUARDRAIL ANCHOR UNIT, TYPE III FOR ATTACHMENT TO RAIL ON BRIDGE (15' MINIMUM LENGTH APPROACH SLAB)

SHEET 1 OF 6
862D03

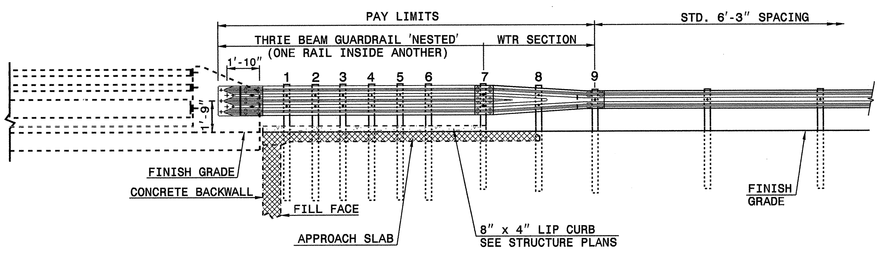

ELEVATION

NOTE:
**POST NOT REQUIRED FOR SKEW ANGLES GREATER THAN 150° OR LESS THAN 30° UNLESS OTHERWISE DIRECTED BY THE ENGINEER.
*THE DISTANCE FROM END OF BRIDGE RAIL TO CENTER LINE OF THE FIRST POST SHOULD BE 11½" IF CONCRETE BACKWALL IS NOT PRESENT.
-SHOULDER BERM GUTTER MUST BE INSTALLED TO THE LIMITS 8" x 4" LIP CURB IS SHOWN IF ANCHOR UNIT IS NOT ADJACENT TO AN APPROACH SLAB.
-MEASURE GUARDRAIL HEIGHT FROM THE TOP OF ADJACENT SURFACE (SHOULDER, BERM, OR GUTTER).
-LAP JOINTS IN THE DIRECTION OF TRAFFIC FLOW.
-SEE SHEET 5 FOR POST SECTIONS 1 THRU 9.

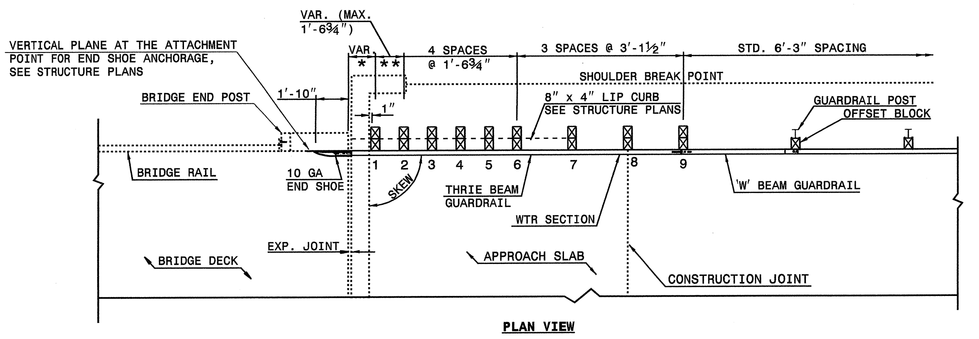

PLAN VIEW

GUARDRAIL ANCHOR UNIT, TYPE III FOR ATTACHMENT TO RAIL ON BRIDGE (15' MINIMUM LENGTH APPROACH SLAB)

STATE OF NORTH CAROLINA
DEPT. OF TRANSPORTATION
DIVISION OF HIGHWAYS
RALEIGH, N.C.

ENGLISH DETAIL DRAWING FOR
STRUCTURE ANCHOR UNITS
GUARDRAIL ANCHOR UNIT, TYPE III FOR ATTACHMENT TO RAIL ON BRIDGE (15' MINIMUM LENGTH APPROACH SLAB)

SHEET 1 OF 6
862D03

STATE OF NORTH CAROLINA
DEPT. OF TRANSPORTATION
DIVISION OF HIGHWAYS
RALEIGH, N.C.

ENGLISH DETAIL DRAWING FOR
STRUCTURE ANCHOR UNITS
GUARDRAIL ANCHOR UNIT, TYPE III FOR ATTACHMENT TO RAIL ON BRIDGE (25' MINIMUM LENGTH APPROACH SLAB)

SHEET 2 OF 6
862D03

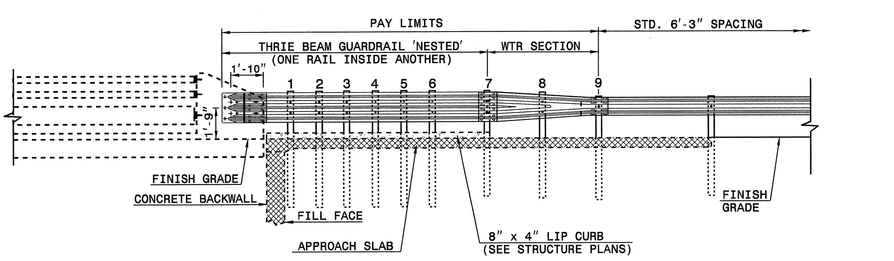

ELEVATION

NOTE:
**POST NOT REQUIRED FOR SKEW ANGLES GREATER THAN 150° OR LESS THAN 30° UNLESS OTHERWISE DIRECTED BY THE ENGINEER.
*THE DISTANCE FROM END OF BRIDGE RAIL TO CENTER LINE OF THE FIRST POST SHOULD BE 11½" IF CONCRETE BACKWALL IS NOT PRESENT.
-SHOULDER BERM GUTTER MUST BE INSTALLED TO THE LIMITS 8" x 4" LIP CURB IS SHOWN IF ANCHOR UNIT IS NOT ADJACENT TO AN APPROACH SLAB.
-MEASURE GUARDRAIL HEIGHT FROM THE TOP OF ADJACENT SURFACE (SHOULDER, BERM, OR GUTTER).
-LAP JOINTS IN THE DIRECTION OF TRAFFIC FLOW.
-SEE SHEET 5 FOR POST SECTIONS 1 THRU 9.

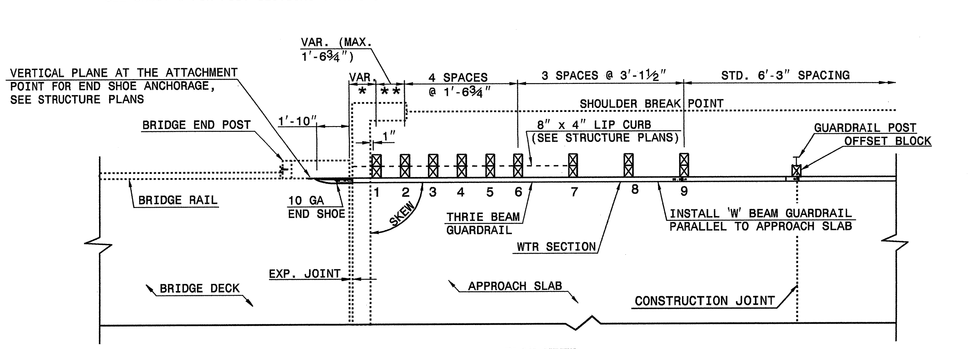

PLAN VIEW

GUARDRAIL ANCHOR UNIT, TYPE III FOR ATTACHMENT TO RAIL ON BRIDGE (25' MINIMUM LENGTH APPROACH SLAB)

STATE OF NORTH CAROLINA
DEPT. OF TRANSPORTATION
DIVISION OF HIGHWAYS
RALEIGH, N.C.

ENGLISH DETAIL DRAWING FOR
STRUCTURE ANCHOR UNITS
GUARDRAIL ANCHOR UNIT, TYPE III FOR ATTACHMENT TO RAIL ON BRIDGE (25' MINIMUM LENGTH APPROACH SLAB)

SHEET 2 OF 6
862D03

PROJECT SERVICES UNIT
STANDARDS AND SPECIAL DESIGN
Office 919-250-4128 FAX 919-250-4119

SEE PLATE FOR TITLE

ORIGINAL BY: 2002 STANDARDS DATE: 01-15-02
MODIFIED BY: E. E. WARD DATE: 09-14-05
CHECKED BY: 9/26/05 DATE: 9/26/05
FILE SPEC.: $fdes/02stdstodetails/english/862d03.dgn

PROJECT REFERENCE NO. B-4199
SHEET NO. 2-K

21-SEP-2005 09:34
S:\Contracts\Contracts\Special Details\ericward\stds\02' Stds to Special Details\english\86203\0862d03.dgn
ericward AT PS222243

STATE OF NORTH CAROLINA
DEPT. OF TRANSPORTATION
DIVISION OF HIGHWAYS
RALEIGH, N.C.

ENGLISH DETAIL DRAWING FOR
STRUCTURE ANCHOR UNITS
GUARDRAIL ANCHOR UNIT, TYPE III FOR ATTACHMENT TO
RAIL ON APPROACH SLAB (15' MINIMUM LENGTH APPROACH SLAB)

SHEET 3 OF 6
862D03

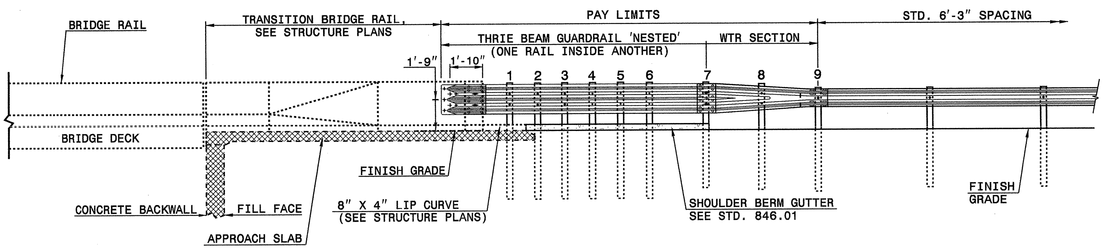

ELEVATION

NOTE:
- -SHOULDER BERM GUTTER MUST BE INSTALLED TO THE LIMITS 8" x 4" LIP CURB IS SHOWN IF ANCHOR UNIT IS NOT ADJACENT TO AN APPROACH SLAB.
- -MEASURE GUARDRAIL HEIGHT FROM THE TOP OF ADJACENT SURFACE (SHOULDER, BERM, OR GUTTER).
- -LAP JOINTS IN THE DIRECTION OF TRAFFIC FLOW.
- -SEE SHEET 5 FOR POST SECTIONS 1 THRU 9.

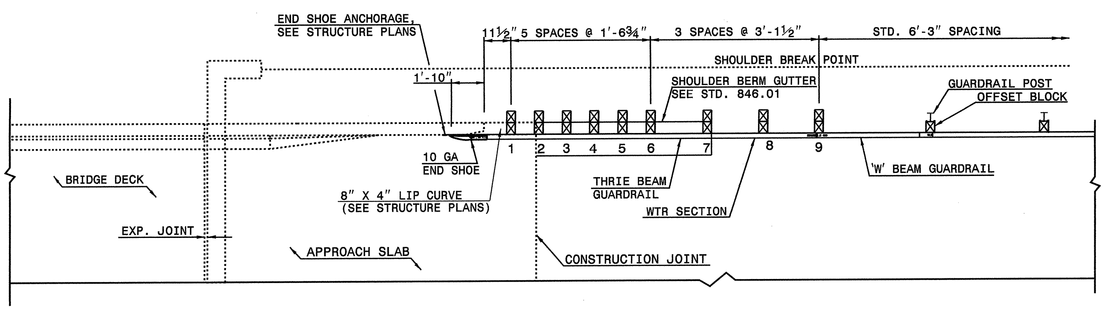

PLAN VIEW

GUARDRAIL ANCHOR UNIT, TYPE III FOR ATTACHMENT TO RAIL ON APPROACH SLAB (15' MINIMUM LENGTH APPROACH SLAB)

STATE OF NORTH CAROLINA
DEPT. OF TRANSPORTATION
DIVISION OF HIGHWAYS
RALEIGH, N.C.

ENGLISH DETAIL DRAWING FOR
STRUCTURE ANCHOR UNITS
GUARDRAIL ANCHOR UNIT, TYPE III FOR ATTACHMENT TO
RAIL ON APPROACH SLAB (15' MINIMUM LENGTH APPROACH SLAB)

SHEET 3 OF 6
862D03

STATE OF NORTH CAROLINA
DEPT. OF TRANSPORTATION
DIVISION OF HIGHWAYS
RALEIGH, N.C.

ENGLISH DETAIL DRAWING FOR
STRUCTURE ANCHOR UNITS
GUARDRAIL ANCHOR UNIT, TYPE III FOR ATTACHMENT TO
RAIL ON APPROACH SLAB (25' MINIMUM LENGTH APPROACH SLAB)

SHEET 4 OF 6
862D03

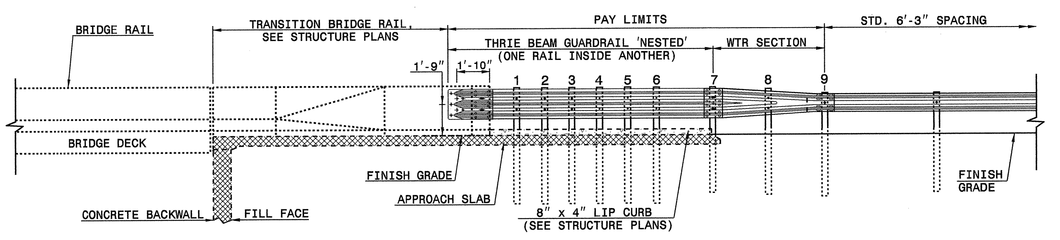

ELEVATION

NOTE:
- -SHOULDER BERM GUTTER MUST BE INSTALLED TO THE LIMITS 8" x 4" LIP CURB IS SHOWN IF ANCHOR UNIT IS NOT ADJACENT TO AN APPROACH SLAB.
- -MEASURE GUARDRAIL HEIGHT FROM THE TOP OF ADJACENT SURFACE (SHOULDER, BERM, OR GUTTER).
- -LAP JOINTS IN THE DIRECTION OF TRAFFIC FLOW.
- -SEE SHEET 5 FOR POST SECTIONS 1 THRU 9.

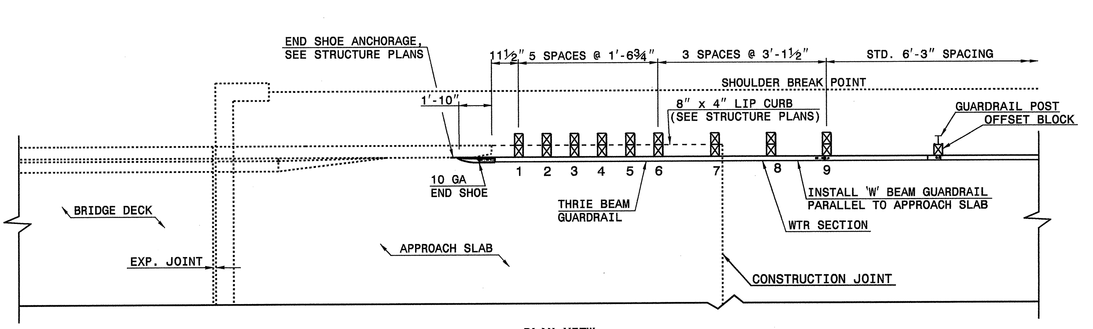

PLAN VIEW

GUARDRAIL ANCHOR UNIT, TYPE III FOR ATTACHMENT TO RAIL ON APPROACH SLAB (25' MINIMUM LENGTH APPROACH SLAB)

STATE OF NORTH CAROLINA
DEPT. OF TRANSPORTATION
DIVISION OF HIGHWAYS
RALEIGH, N.C.

ENGLISH DETAIL DRAWING FOR
STRUCTURE ANCHOR UNITS
GUARDRAIL ANCHOR UNIT, TYPE III FOR ATTACHMENT TO
RAIL ON APPROACH SLAB (25' MINIMUM LENGTH APPROACH SLAB)

SHEET 4 OF 6
862D03

PROJECT SERVICES UNIT
STANDARDS AND SPECIAL DESIGN
OFFICE 919-250-4128 FAX 919-250-4119

SEE PLATE FOR TITLE

ORIGINAL BY: 2002 STANDARDS DATE: 01-15-02
MODIFIED BY: E.E. WARD DATE: 09-14-05
CHECKED BY: [illegible] DATE: 4/12/06
FILE SPEC.: S:\Stds\02s\Details\english\86203.dgn

NORTH CAROLINA PROFESSIONAL ENGINEER SEAL 025616

PROJECT REFERENCE NO. B-4199
SHEET NO. 2-L

15-SEP-2005 11:16
S:\Contracts\Contracts\Special Details\ericward\stds\02' Stds to Special Details\english\862d03\0862d03.dgn
ericward AT FS222293

STATE OF NORTH CAROLINA
DEPT. OF TRANSPORTATION
DIVISION OF HIGHWAYS
RALEIGH, N.C.

ENGLISH DETAIL DRAWING FOR
STRUCTURE ANCHOR UNITS
GUARDRAIL ANCHOR UNIT, TYPE III

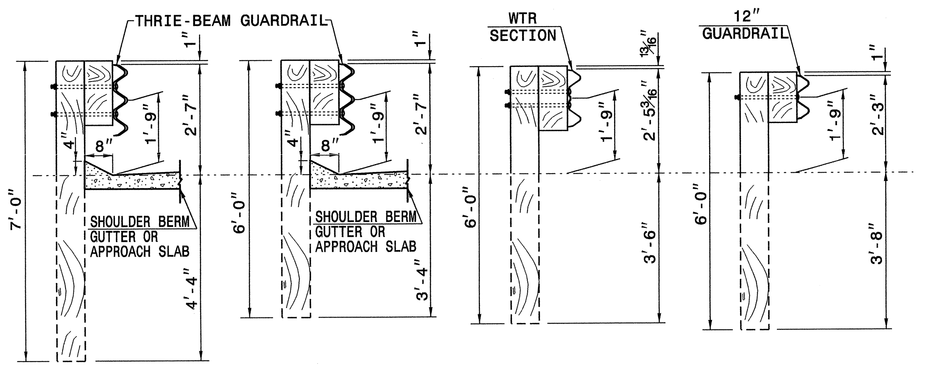

SECTION OF THRIE BEAM POSTS 1 THRU 6

SECTION OF THRIE BEAM POST 7

SECTION OF WTR BEAM POST 8

SECTION OF 'W' BEAM POST 9

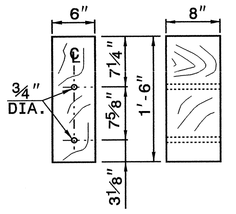

THRIE BEAM OFFSET BLOCK

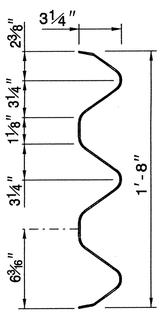

THRIE-BEAM SECTION

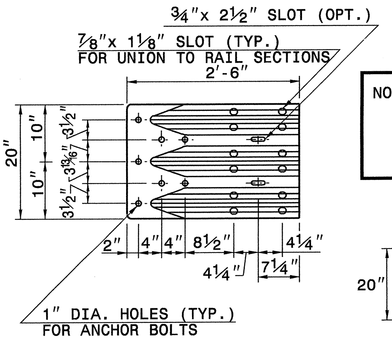

END SHOE

NOTE: THE MID POST AND OFFSET BLOCK OF THE WTR SECTION WILL REQUIRE SPECIAL BOLT HOLE DRILLING IN THE THRIE BEAM OFFSET BLOCK AND LINE POST.

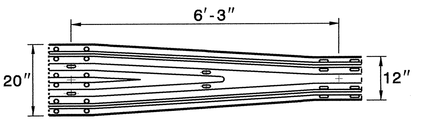

WTR SECTION
ELEVATION VIEW

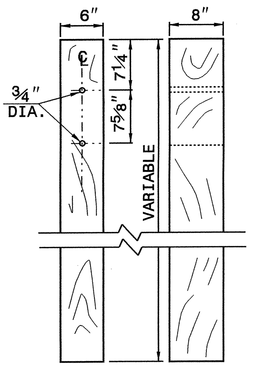

THRIE BEAM LINE POST

STATE OF NORTH CAROLINA
DEPT. OF TRANSPORTATION
DIVISION OF HIGHWAYS
RALEIGH, N.C.

ENGLISH DETAIL DRAWING FOR
STRUCTURE ANCHOR UNITS
GUARDRAIL ANCHOR UNIT, TYPE III

SHEET 5 OF 6
862D03

STATE OF NORTH CAROLINA
DEPT. OF TRANSPORTATION
DIVISION OF HIGHWAYS
RALEIGH, N.C.

ENGLISH DETAIL DRAWING FOR
STRUCTURE ANCHOR UNITS
ANCHORAGE FOR GUARDRAIL POST ON BOX CULVERT

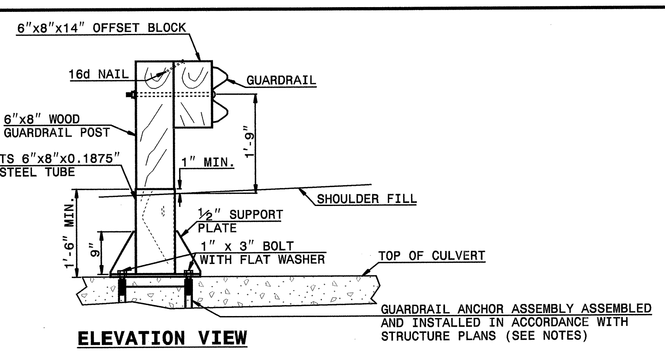

ELEVATION VIEW

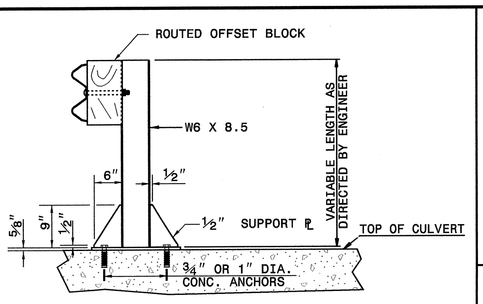

ELEVATION VIEW

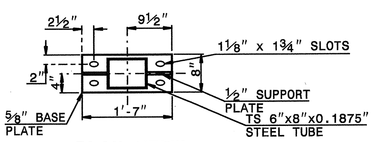

PLAN VIEW

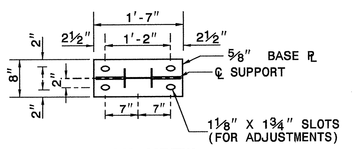

PLAN VIEW

NOTES FOR:
GUARDRAIL POST ANCHORED TO STRUCTURE:
- USE FULL LENGTH 1/8" BUTT WELDS AT ALL LOCATIONS OF CONTACT BETWEEN THE BASE PLATE, SUPPORT PLATES AND STEEL POST OR STEEL TUBE.
- USE POST AND POST BASE PLATES CONFORMING TO THE REQUIREMENTS OF A.S.T.M. A-36 AND GALVANIZED AFTER FABRICATION TO CONFORM TO A.S.T.M. A-123.
- USE WOOD POSTS WHICH FIT SNUGLY IN THE STEEL TUBE WITH A MAXIMUM OF 1/8" CLEARANCE BETWEEN TUBE WALL AND POST.

NEW STRUCTURES:
- ATTACH POST TO INSERT ASSEMBLY UNITS (USING ANCHOR BOLTS SUPPLIED WITH INSERTS) WHICH HAVE BEEN CAST INTO THE STRUCTURE DURING CONSTRUCTION.

EXISTING STRUCTURES:
- USE CONCRETE ANCHORS CONSISTING OF A STUD BOLT WITH NUT AND WASHER. USE STUDS THREADED ON ONE END AND HAVING AN EXPANDED WEDGE ASSEMBLY POSITIONED AROUND A TAPERED AREA AT THE OTHER END. USE ANCHORS WHICH PROVIDE A MINIMUM SAFE HOLDING POWER OF 2875 LBS. FOR A 3/4" OR 1" DIAMETER BOLT. CALCULATE HOLDING POWER BASED ON 1/4 THE ACTUAL HOLDING POWER OF THE ANCHOR IN 3500 PSI CONCRETE AS DETERMINED BY AN APPROVED COMMERCIAL TESTING LABORATORY.

- USE ANCHORS GALVANIZED IN ACCORDANCE WITH A.S.T.M. A-153. SIZE HOLES FOR THE CONCRETE ANCHORS IN ACCORDANCE WITH THE ANCHOR MANUFACTURER'S RECOMMENDATIONS. DRILL HOLES WITH A CARBIDE OR DIAMOND TIPPED MASONRY BIT POWERED BY A ROTARY OR ROTARY IMPACT DRILL. NO OTHER IMPACT TOOLS WILL BE PERMITTED. DRILL HOLES VERTICALLY. FURNISH DOCUMENTATION OF HOLE SIZE RECOMMENDED FOR THE SPECIFIED ANCHOR TO THE ENGINEER BEFORE DRILLING HOLES. THOROUGHLY CLEAN HOLES FOR ANCHORS OF ALL CONCRETE CHIPS, DUST, GREASE, OIL, ETC. BEFORE ANCHORS ARE INSTALLED. REPAIR ALL DAMAGE CAUSED BY THIS WORK TO THE SATISFACTION OF THE ENGINEER.

ANCHORAGE FOR GUARDRAIL POST ON BOX CULVERT

STATE OF NORTH CAROLINA
DEPT. OF TRANSPORTATION
DIVISION OF HIGHWAYS
RALEIGH, N.C.

ENGLISH DETAIL DRAWING FOR
STRUCTURE ANCHOR UNITS
ANCHORAGE FOR GUARDRAIL POST ON BOX CULVERT

SHEET 6 OF 6
862D03

PROJECT SERVICES UNIT
STANDARDS AND SPECIAL DESIGN
Office 919-250-4128 FAX 919-250-4119

SEE PLATE FOR TITLE

ORIGINAL BY: 2002 STANDARDS DATE: 01-15-02
MODIFIED BY: E. E. WARD DATE: 09-14-05
CHECKED BY: DATE:
FILE SPEC.: stds/02stdstoDetails/english/862d03.dgn

PROJECT REFERENCE NO. B-4199
SHEET NO. 2-M

5/28/99

PROJECT REFERENCE NO.	SHEET NO.
B-4199	3

SUMMARY OF QUANTITIES

STATE OF NORTH CAROLINA
DIVISION OF HIGHWAYS
ROADWAY SUMMARY OF QUANTITIES FOR CONTRACT - C201445

ItemNumber	Sec #	Quantity	Unit	Description
0000100000-N	800	Lump Sum		MOBILIZATION
0029000000-N	SP	Lump Sum		REINFORCED BRIDGE APPROACH FILL, STATION ********** (13+30.25)
0043000000-N	226	Lump Sum		GRADING
0050000000-E	226	1	ACR	SUPPLEMENTARY CLEARING & GRUBBING
0057000000-E	226	100	CY	UNDERCUT EXCAVATION
0080000000-E	SP	500	TON	CLASS IV SUBGRADE STABILIZATION
0134000000-E	240	20	CY	DRAINAGE DITCH EXCAVATION
0195000000-E	265	500	CY	SELECT GRANULAR MATERIAL
0196000000-E	270	500	SY	FABRIC FOR SOIL STABILIZATION
1220000000-E	545	25	TON	INCIDENTAL STONE BASE
1489000000-E	610	355	TON	ASPHALT CONC BASE COURSE, TYPE B25.0B
1525000000-E	SP	210	TON	ASPHALT CONC SURFACE COURSE, TYPE SF9.5A
1560000000-E	620	29	TON	ASPHALT BINDER FOR PLANT MIX, GRADE PG 64-22
1693000000-E	654	25	TON	ASPHALT PLANT MIX, PAVEMENT REPAIR
2000000000-N	806	15	EA	RIGHT OF WAY MARKERS
2022000000-E	815	225	CY	SUBDRAIN EXCAVATION
2033000000-E	815	170	CY	SUBDRAIN FINE AGGREGATE
2044000000-E	815	1,000	LF	6" PERFORATED SUBDRAIN PIPE
2055000000-E	815	30	EA	6" SUBDRAIN PIPE WYES, TEES, & ELBOWS
2066000000-N	815	2	EA	CONCRETE PAD FOR SUBDRAIN PIPE OUTLET
2077000000-E	815	12	LF	6" OUTLET PIPE (SUBDRAINS)
2556000000-E	846	30	LF	SHOULDER BERM GUTTER
2570000000-N	SP	1	EA	MODIFIED CONCRETE FLUME
3030000000-E	862	200	LF	STEEL BM GUARDRAIL
3150000000-N	862	5	EA	ADDITIONAL GUARDRAIL POSTS

ItemNumber	Sec #	Quantity	Unit	Description
3215000000-N	862	4	EA	GUARDRAIL ANCHOR UNITS, TYPE III
3270000000-N	SP	4	EA	GUARDRAIL ANCHOR UNITS, TYPE 350
3649000000-E	876	95	TON	PLAIN RIP RAP, CLASS B
3656000000-E	876	650	SY	FILTER FABRIC FOR DRAINAGE
3659000000-N	SP	1	EA	PREFORMED SCOUR HOLES WITH LEVEL SPREADER APRON
4025000000-E	901	15.25	SF	CONTRACTOR FURNISHED, TYPE *** SIGN (E)
4072000000-E	903	28	LF	SUPPORTS, 3-LB STEEL U-CHANNEL
4110000000-N	904	2	EA	SIGN ERECTION, TYPE *** (GROUND MOUNTED) (E)
4155000000-N	907	4	EA	DISPOSAL OF SIGN SYSTEM, U-CHANNEL
4238000000-N	907	4	EA	DISPOSAL OF SIGN, D, E OR F
4412000000-E	SP	78	SF	WORK ZONE SIGNS (STATIONARY)
4412100000-E	SP	180	SF	WORK ZONE SIGNS (PORTABLE)
4412200000-E	SP	20	SF	WORK ZONE SIGNS (BARRICADE MOUNTED)
4430000000-N	1130	22	EA	DRUMS
4435000000-N	1135	22	EA	CONES
4446100000-E	SP	50	LF	BARRICADES (TYPE III)
4450000000-N	1150	240	HR	FLAGGER
4465000000-N	1160	1	EA	TEMPORARY CRASH CUSHIONS
4490000000-E	1170	100	LF	PORTABLE CONCRETE BARRIER (ANCHORED)
4810000000-E	1205	10,400	LF	PAINT PAVEMENT MARKING LINES (4")
4835000000-E	1205	100	LF	PAINT PAVEMENT MARKING LINES (24")
6000000000-E	1605	1,185	LF	TEMPORARY SILT FENCE
6006000000-E	1610	75	TON	STONE FOR EROSION CONTROL, CLASS A

ItemNumber	Sec #	Quantity	Unit	Description
6009000000-E	1610	65	TON	STONE FOR EROSION CONTROL, CLASS B
6012000000-E	1610	160	TON	SEDIMENT CONTROL STONE
6015000000-E	1615	0.5	ACR	TEMPORARY MULCHING
6018000000-E	1620	50	LB	SEED FOR TEMPORARY SEEDING
6021000000-E	1620	0.25	TON	FERTILIZER FOR TEMPORARY SEEDING
6029000000-E	SP	250	LF	SAFETY FENCE
6030000000-E	1630	145	CY	SILT EXCAVATION
6036000000-E	1631	505	SY	MATTING FOR EROSION CONTROL
6070000000-N	SP	6	EA	SPECIAL STILLING BASINS
6084000000-E	1660	0.5	ACR	SEEDING & MULCHING
6087000000-E	1660	0.5	ACR	MOWING
6090000000-E	1661	50	LB	SEED FOR REPAIR SEEDING
6093000000-E	1661	0.25	TON	FERTILIZER FOR REPAIR SEEDING
6096000000-E	1662	50	LB	SEED FOR SUPPLEMENTAL SEEDING
6108000000-E	1665	0.5	TON	FERTILIZER TOPDRESSING
6114000000-N	SP	2	HR	SPECIALIZED HAND MOWING
6123000000-E	1670	0.28	ACR	REFORESTATION
6132000000-N	SP	8	EA	GENERIC EROSION CONTROL ITEM RESPONSE FOR EROSION CONTROL

Ramey Kemp & Associates, Inc.
Transportation Consulting Engineers
4928-A Windy Hill Drive Raleigh, North Carolina 27609
(919) 872-5115 fax (919) 878-5416

10/26/98

COMPUTED BY: D. PETRY	DATE: 02-01-05	ROADWAY DESIGN ENGINEER	HYDRAULIC ENGINEER
CHECKED BY: S. CLARK	DATE: 02-07-05	NORTH CAROLINA PROFESSIONAL SEAL 27771 ENGINEER ANDREW B. COPPLE 3/20/06	NORTH CAROLINA PROFESSIONAL SEAL 9338 ENGINEER HENRY W. WELLS 3/21/06

STATE OF NORTH CAROLINA
DIVISION OF HIGHWAYS

PROJECT REFERENCE NO.	SHEET NO.
B-4199	3-A

SUMMARY OF EARTHWORK

STATION TO STATION	UNCLASIFIED EXCAVATION (cu. yds)	UNDERCUT (cu. yds)	ROADWAY EMBANKMENT (cu. yds)	BORROW (cu. yds)	WASTE (cu. yds)
SUMMARY #1					
-L- STA. 10+09.47 -L- STA. 12+75.25 (BEGIN BRIDGE)	1,286		105	0	1,181
SUMMARY #2					
-L- STA. 13+85.25 (END BRIDGE) -L- STA. 16+50.00	46		1,409	1,363	
SUBTOTAL (SUMMARIES 1-2)	1,332		1,514	1,363	1,181
EST. LOSS DUE TO CLEARING & GRUBBING	-10			10	
WASTE IN LIEU OF BORROW				-1,181	-1,181
REMOVAL OF EXISTING END BENTS	180				180
PROJECT SUBTOTALS	1,502		1,514	192	180
EST. 5% FOR REPLACING TOPSOIL ON BORROW PITS				10	
GRAND TOTAL	1,502		1,514	202	180
SAY	1,510			210	200

NOTE: APPROXIMATE QUANTITIES ONLY. UNCLASSIFIED EXCAVATION, BORROW EXCAVATION, FINE GRADING, AND CLEARING AND GRUBBING WILL BE PAID FOR AT THE CONTRACT LUMP SUM PRICE FOR "GRADING".

ESTIMATED DRAINAGE DITCH EXCAVATION = 20 CY.
ESTIMATED GRADE POINT UNDERCUT = 100 CY.
ESTIMATED SELECT GRANULAR MATERIAL CL. II & III = 500 CY.
ESTIMATED SUBGRADE STABILIZATION MATERIAL CL. IV = 500 TNS.
ESTIMATED FABRIC FOR SOIL STABILIZATION = 500 SY.

"N" = DISTANCE FROM EDGE OF LANE TO FACE OF GUARDRAIL.
TOTAL SHOULDER WIDTH = DISTANCE FROM EDGE OF TRAVEL LANE TO SHOULDER BREAK POINT.
FLARE LENGTH = DISTANCE FROM LAST SECTION OF PARALLEL GUARDRAIL TO END OF GUARDRAIL.
W = TOTAL WIDTH OF FLARE FROM BEGINNING OF TAPER TO END OF GUARDRAIL.

GUARDRAIL SUMMARY

SURVEY LINE	BEG. STA.	END STA.	LOCATION	LENGTH: STRAIGHT	LENGTH: SHOP CURVED	LENGTH: DOUBLE FACED	WARRANT POINT: APPROACH END	WARRANT POINT: TRAILING END	"N" DIST. FROM E.O.L.	TOTAL SHOUL. WIDTH	FLARE LENGTH: APPROACH END	FLARE LENGTH: TRAILING END	W: APPROACH END	W: TRAILING END	ANCHORS: XI MOD	ANCHORS: TYPE III	ANCHORS: GRAU 350	ANCHORS: M-350	ANCHORS: XIII	ANCHORS: CAT-A	ANCHORS: VI MOD	ANCHORS: BIC	IMPACT ATTENUATOR TYPE 350	SINGLE FACED GUARDRAIL	REMOVE EXISTING GUARDRAIL	REMOVE AND STOCKPILE EXISTING GUARDRAIL	REMARKS
-L-	11+46.35	12+58.85	RT.	112.50'				12+58.85	4'	7'		93.75'		4.79'		1	1										
-L-	11+83.26	12+70.76	LT.	87.50'			12+70.76		4'	7'	68.75'		2.77'			1	1										
-L-	13+86.05	14+61.05	RT.	75.00'			13+86.05		4'	7'	56.25'		2.77'			1	1										
-L-	14+17.01	16+17.01	LT.	200.00'				14+17.01	4'	7'		181.25'		3.41'		1	1										
																4	4										
							DEDUCTION FOR ANCHOR UNITS:																				
SUBTOTAL				475.00'			4 GRAU-350 @ 50.00' = 200.00'			ADDITIONAL GUARDRAIL POSTS ..... 5 EA.																	
DEDUCTIONS FOR ANCHOR UNITS:				-275.00'			4 TYPE III @ 18.75' = 75.00'																				
								275.00'																			
TOTAL				200.00'																							
			SAY	200.00'																							

LIST OF PIPES, ENDWALLS, ETC. (FOR PIPES 48" & UNDER)

STATION / SIZE / THICKNESS OR GAUGE	LOCATION (LT,RT, OR CL)	STRUCTURE NO. FROM	STRUCTURE NO. TO	TOP ELEVATION	INVERT ELEVATION	INVERT ELEVATION	SLOPE CRITICAL	CLASS III R.C. PIPE (UNLESS NOTED OTHERWISE): 12"	15"	18"	24"	30"	36"	42"	48"	BITUMINOUS COATED C.S. PIPE TYPE B (UNLESS NOTED OTHRWISE): 12"	15"	18"	24"	30"	36"	42"	48"	15" SIDE DRAIN PIPE	18" SIDE DRAIN PIPE	24" SIDE DRAIN PIPE	ENDWALLS: STD. 838.01 OR STD. 838.11 (UNLESS NOTED OTHERWISE): CU. YDS. R.C.P.	CU. YDS. C.S.P.	QUANTITIES FOR DRAINAGE STRUCTURES: * TOTAL LF. FOR PAY QUANTITY SHALL BE COL. "A" + (1.3 X COL. "B"): LIN. *FT. A: PER EACH (0' THRU 5.0')	LIN. *FT. A: 5.0' THRU 10.0'	LIN. *FT. B: 10.0' AND ABOVE	C.B. STD. 840.01 OR STD. 840.02	FRAME, GRATES AND HOOD STANDARD 840.03: TYPE OF GRATE E	TYPE OF GRATE F	TYPE OF GRATE G	PREFORMED SCOUR HOLE SEE DETAIL 2-A	MODIFIED CONCRETE FLUME SEE DETAIL 2-B	REMARKS
-L- 12+45	LT.	1																																					1		
-L- 13+75	RT.	2																																						1	
TOTALS																																									

ABBREVIATIONS

C.B.	CATCH BASIN
N.D.I.	NARROW DROP INLET
D.I.	DROP INLET
M.D.I.	MEDIAN DROP INLET
M.D.I. (N.S.)	MEDIAN DROP INLET (NARROW SLOT)
J.B.	JUNCTION BOX
M.H.	MANHOLE
T.B.D.I.	TRAFFIC BEARING DROP INLET
T.B.J.B.	TRAFFIC BEARING JUCTION BOX

REMARKS

Ramey Kemp & Associates, Inc.
Transportation Consulting Engineers
4928-A Windy Hill Drive Raleigh, North Carolina 27609
(919) 872-515 fax (919) 878-5416

10/26/98

REVISIONS

** DESIGN EXCEPTION FOR DESIGN SPEED REQUIRED

PROJECT REFERENCE NO.	SHEET NO.
B-4199	4
R/W SHEET NO.	
ROADWAY DESIGN ENGINEER	HYDRAULICS ENGINEER

NORTH CAROLINA PROFESSIONAL SEAL 27771 ENGINEER MATTHEW B. COPPLE 5/24/06

NORTH CAROLINA PROFESSIONAL SEAL 9334 ENGINEER W. HENRY WELLS, JR. 3/21/06

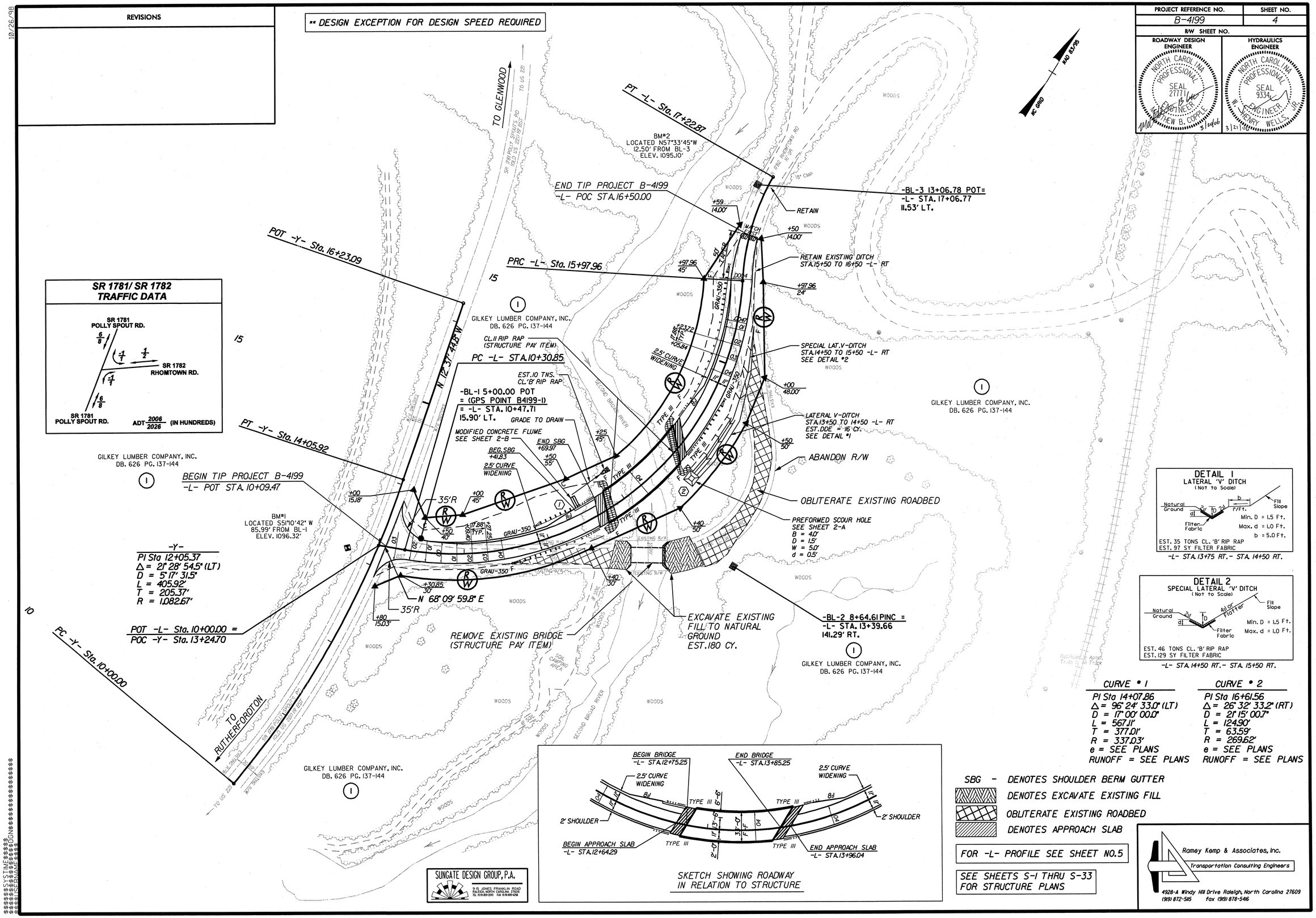

CURVE #1	CURVE #2
PI Sta 14+07.86	PI Sta 16+61.56
Δ = 96° 24' 33.0" (LT)	Δ = 26° 32' 33.2" (RT)
D = 17° 00' 00.0"	D = 21° 15' 00.7"
L = 567.11'	L = 124.90'
T = 377.01'	T = 63.59'
R = 337.03'	R = 269.62'
e = SEE PLANS	e = SEE PLANS
RUNOFF = SEE PLANS	RUNOFF = SEE PLANS

SBG - DENOTES SHOULDER BERM GUTTER

DENOTES EXCAVATE EXISTING FILL

OBLITERATE EXISTING ROADBED

DENOTES APPROACH SLAB

FOR -L- PROFILE SEE SHEET NO.5

SEE SHEETS S-1 THRU S-33 FOR STRUCTURE PLANS

SUNGATE DESIGN GROUP, P.A.
915 JONES FRANKLIN ROAD
RALEIGH, NORTH CAROLINA 27606
TEL (919) 851-2210 FAX (919) 851-1234

Ramey Kemp & Associates, Inc.
Transportation Consulting Engineers
4928-A Windy Hill Drive Raleigh, North Carolina 27609
(919) 872-5115 fax (919) 878-5416

$$$$$$$$CSTIME$$$$$$
$$$$$$$$USERNAME$$$$$$
$$$$$$$$DGN$$$$$$$$

PROJECT REFERENCE NO.	SHEET NO.
B-4199	5

ROADWAY DESIGN ENGINEER
NORTH CAROLINA PROFESSIONAL SEAL 27771 ENGINEER MATTHEW B. COPPLE 11/01/05

HYDRAULICS ENGINEER
NORTH CAROLINA PROFESSIONAL SEAL 9334 ENGINEER HENRY WELLS, JR. 11/01/05

STRUCTURE HYDRAULIC DATA

DESIGN DISCHARGE	=	2,380 CFS
DESIGN FREQUENCY	=	25 YRS
DESIGN HW ELEVATION	=	1081.7 FT.
BASE DISCHARGE	=	3,540 CFS
BASE FREQUENCY	=	100 YRS
BASE HW ELEVATION	=	1083.6 FT
OVERTOPPING DISCHARGE	=	4,220 CFS
OVERTOPPING FREQUENCY	=	200 YR.
OVERTOPPING ELEVATION	=	1086.6 FT

B.M.#2 ELEV.= 1095.10
8" NAIL IN BASE OF
24" TULIP POPLAR
12.50' LT. OF -BL3- STA. 13+06.78
11.53' LT. OF -L- STA. 17+06.77

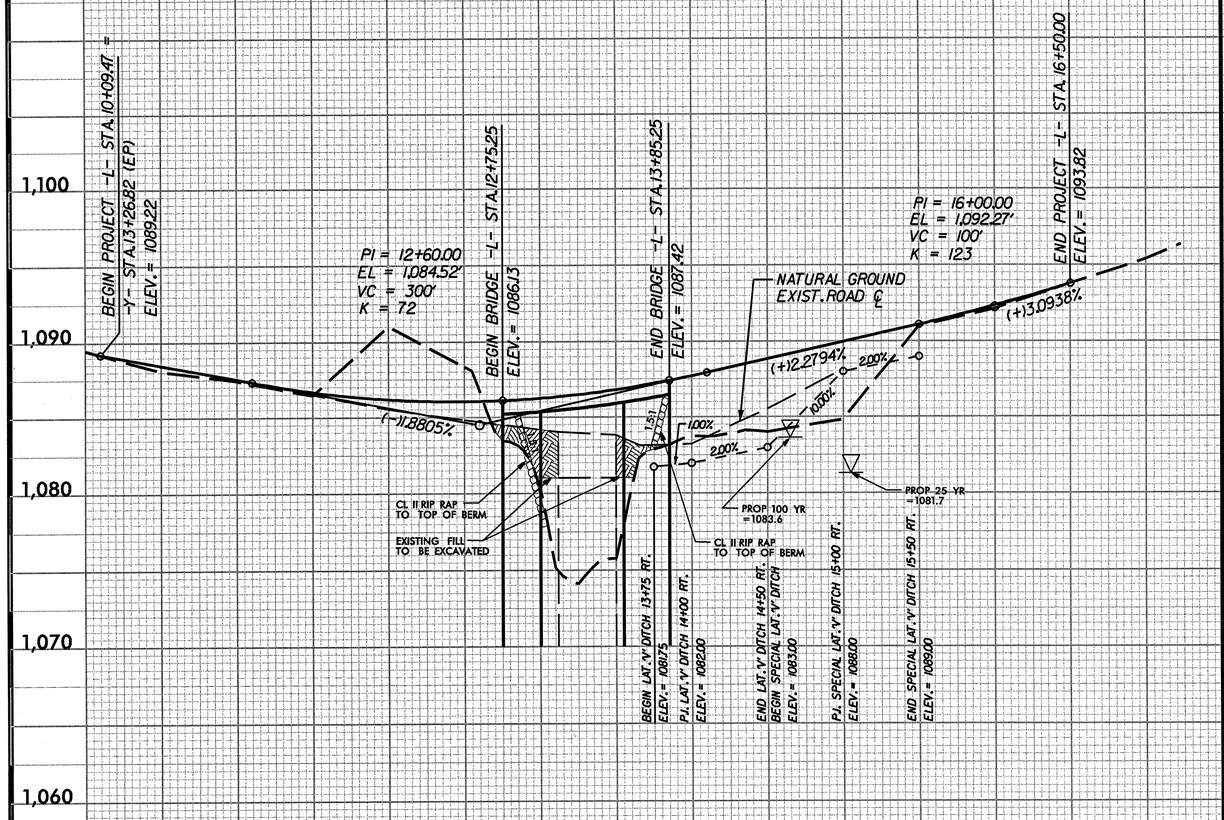

** DESIGN EXCEPTION FOR DESIGN SPEED REQUIRED

-L-
(FOR PLAN, SEE SHEET NO. 4)

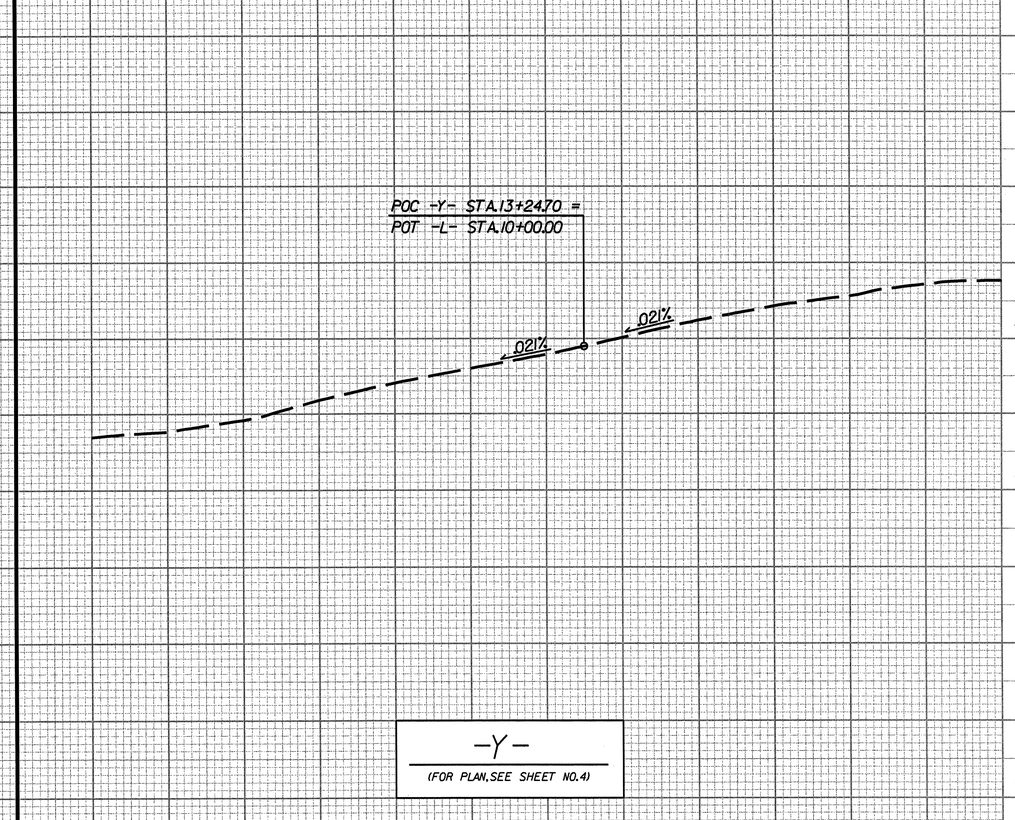

-Y-
(FOR PLAN, SEE SHEET NO. 4)

SUNGATE DESIGN GROUP, P.A.
915 JONES FRANKLIN ROAD
RALEIGH, NORTH CAROLINA 27606
TEL (919) 859-1243 FAX (919) 859-9258

Ramey Kemp & Associates, Inc.
Transportation Consulting Engineers
4928-A Windy Hill Drive Raleigh, North Carolina 27609
(919) 872-5115 fax (919) 878-5416

$$$$SYSTIME$$$$
$$$$USERNAME$$$$