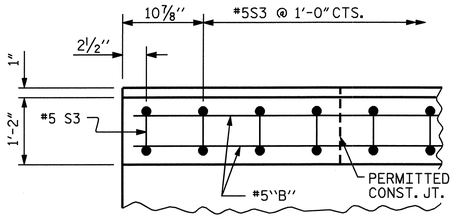


PLAN OF PARAPET

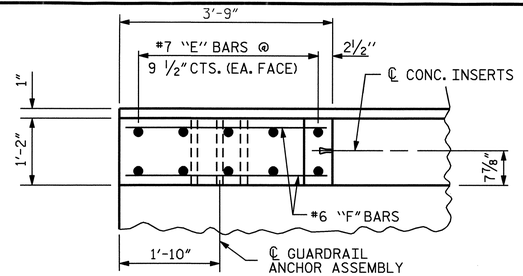


PLAN OF END POST

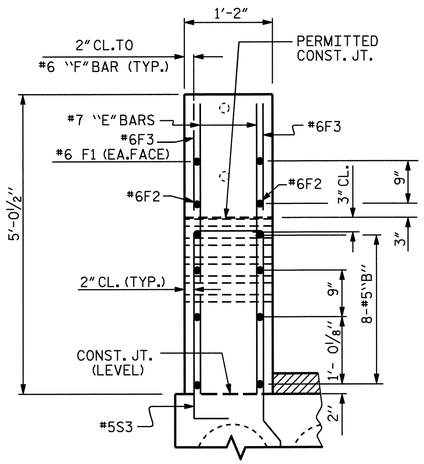


END VIEW

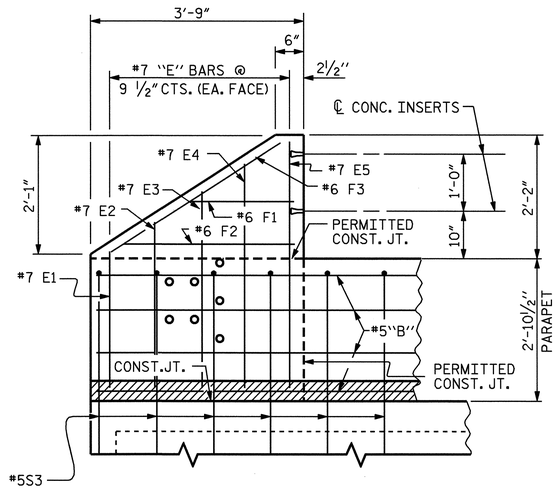


ELEVATION

## PARAPET AND END POST FOR TWO BAR RAIL

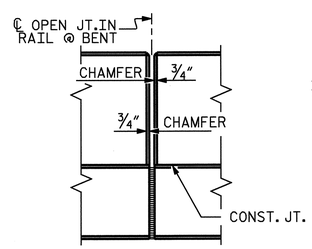


ELEVATION AT EXPANSION JOINT

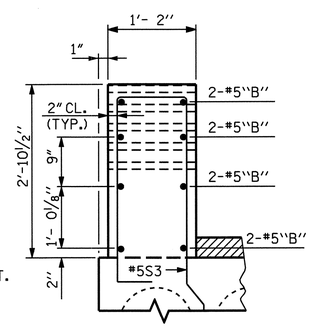


SECTION THRU PARAPET

## PARAPET DETAILS

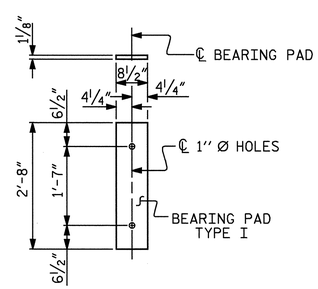


FIXED END
(TYPE I - 78 REQ'D)

## ELASTOMERIC BEARING DETAILS

## BAR TYPES

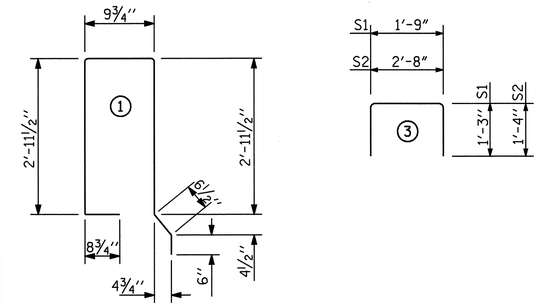


ALL BAR DIMENSIONS ARE OUT TO OUT

## BILL OF MATERIAL FOR ONE CORED SLAB SECTION FOR SPANS A OR C

| | | | | EXTERIOR UNIT | | INTERIOR UNIT | |
|---|---|---|---|---|---|---|---|
| BAR | NUMBER | SIZE | TYPE | LENGTH | WEIGHT | LENGTH | WEIGHT |
| B1 | 4 | #4 | STR | 19'-8" | 53 | 19'-8" | 53 |
| S1 | 8 | #5 | 3 | 4'-3" | 35 | 4'-3" | 35 |
| S2 | 74 | #4 | 3 | 5'-4" | 264 | 5'-4" | 264 |
| ✳ S3 | 39 | #5 | 1 | 8'-6" | 346 | | |
| REINFORCING STEEL | | | | | 352 LBS. | | 352 LBS. |
| ✳ EPOXY COATED REINFORCING STEEL | | | | | 346 LBS. | | |
| 5,000 P.S.I. CONCRETE | | | | | 5.3 CU. YDS. | | 5.3 CU. YDS. |
| 1/2" Ø L.R. STRANDS | | | | | No. 14 | | No. 14 |

## BILL OF MATERIAL FOR ONE CORED SLAB SECTION FOR SPAN B

| | | | | EXTERIOR UNIT | | INTERIOR UNIT | |
|---|---|---|---|---|---|---|---|
| BAR | NUMBER | SIZE | TYPE | LENGTH | WEIGHT | LENGTH | WEIGHT |
| B2 | 4 | #4 | STR | 25'-8" | 69 | 25'-8" | 69 |
| S1 | 8 | #5 | 3 | 4'-3" | 35 | 4'-3" | 35 |
| S2 | 98 | #4 | 3 | 5'-4" | 349 | 5'-4" | 349 |
| ✳ S3 | 51 | #5 | 1 | 8'-6" | 452 | | |
| REINFORCING STEEL | | | | | 453 LBS. | | 453 LBS. |
| ✳ EPOXY COATED REINFORCING STEEL | | | | | 452 LBS. | | |
| 5,000 P.S.I. CONCRETE | | | | | 6.9 CU. YDS. | | 6.9 CU. YDS. |
| 1/2" Ø L.R. STRANDS | | | | | No. 24 | | No. 24 |

## BILL OF MATERIAL FOR CONCRETE PARAPET AND END POSTS

| BAR | BARS PER SPAN | | | TOTAL NO. | SIZE | TYPE | LENGTH | WEIGHT |
|---|---|---|---|---|---|---|---|---|
| | SPAN A | SPAN B | SPAN C | | | | | |
| ✳ B3 | 16 | | 16 | 32 | #5 | STR | 37'-5" | 1249 |
| ✳ B4 | | 16 | | 16 | #5 | STR | 49'-6" | 826 |
| ✳ E1 | 4 | | 4 | 8 | #7 | STR | 2'- 9" | 45 |
| ✳ E2 | 4 | | 4 | 8 | #7 | STR | 3'- 3" | 53 |
| ✳ E3 | 4 | | 4 | 8 | #7 | STR | 3'- 9" | 61 |
| ✳ E4 | 4 | | 4 | 8 | #7 | STR | 4'- 3" | 69 |
| ✳ E5 | 4 | | 4 | 8 | #7 | STR | 4'-8" | 76 |
| ✳ F1 | 4 | | 4 | 8 | #6 | STR | 1'-10" | 22 |
| ✳ F2 | 4 | | 4 | 8 | #6 | STR | 3'-0" | 36 |
| ✳ F3 | 4 | | 4 | 8 | #6 | STR | 3'-4" | 40 |
| ✳ EPOXY COATED REINFORCING STEEL | | | | | | LBS. | | 2477 |
| CLASS AA CONCRETE | | | | | | CU.YDS. | | 32.0 |
| 1'-2" X 2'-10 1/2" CONCRETE PARAPET | | | | | | LIN. FT. | | 251.0 |

## NOTES

ALL PRESTRESSING STRANDS SHALL BE 7-WIRE LOW RELAXATION GRADE 270 STRANDS AND SHALL CONFORM TO AASHTO M203 EXCEPT FOR SAMPLING REQUIREMENTS WHICH SHALL BE IN ACCORDANCE WITH THE STANDARD SPECIFICATIONS.

ALL REINFORCING STEEL CAST WITH THE CORED SLAB SECTIONS SHALL BE GRADE 60 AND SHALL BE INCLUDED IN THE UNIT PRICE BID FOR CONSTRUCTION FOR SUPERSTRUCTURE.

RECESSES FOR TRANSVERSE STRANDS SHALL BE GROUTED AFTER THE TENSIONING OF THE STRANDS.

THE 2 1/2" Ø DOWEL HOLES AT FIXED ENDS OF SLAB SECTIONS SHALL BE FILLED WITH GROUT.

THE JOINT SEALER MATERIAL SHALL CONFORM TO THE REQUIREMENTS OF TYPE SL LOW MODULUS SILICONE SEALANT. THE 2" Ø BACKER ROD SHALL CONFORM TO THE REQUIREMENTS OF TYPE M BOND BREAKER. SEE SECTION 1028 OF THE STANDARD SPECIFICATIONS.

WHEN CORED SLABS ARE CAST, A POSITIVE HOLD-DOWN SYSTEM SHALL BE EMPLOYED TO PREVENT VOIDS FROM RISING OR MOVING SIDEWAYS. THIS SYSTEM SHALL BE DESIGNED TO BE LEFT IN PLACE UNTIL THE CONCRETE HAS REACHED RELEASE STRENGTH. AT LEAST THREE WEEKS PRIOR TO CASTING CORED SLABS, THE CONTRACTOR SHALL SUBMIT TO THE ENGINEER FOR REVIEW AND COMMENT, DETAILED DRAWINGS OF THE PROPOSED HOLD-DOWN SYSTEM. IN ADDITION TO STRUCTURAL DETAILS, LOCATION AND SPACING OF THE HOLD-DOWNS SHALL BE INDICATED.

THE TRANSFER OF LOAD FROM THE ANCHORAGES TO THE CORED SLAB UNIT SHALL BE DONE WHEN THE CONCRETE HAS REACHED A COMPRESSIVE STRENGTH OF NOT LESS THAN 4000 PSI.

ALL REINFORCING STEEL IN PARAPET AND END BLOCK SHALL BE EPOXY COATED.

PRESTRESSING STRANDS SHALL BE CUT FLUSH WITH THE CORED SLAB UNIT ENDS.

APPLY EPOXY PROTECTIVE COATING TO CORED SLAB UNIT ENDS. FOR EPOXY PROTECTIVE COATING, SEE SPECIAL PROVISIONS.

FOR ELASTOMERIC BEARINGS, SEE SPECIAL PROVISIONS.

FOR PRESTRESSED CONCRETE MEMBERS, SEE SPECIAL PROVISIONS.

## DEAD LOAD DEFLECTION AND CAMBER

| | 3'-0" x 1'-9" | |
|---|---|---|
| | 1/2" Ø L.R. STRAND | |
| | SPAN "A" & "C" | SPAN "B" |
| CAMBER (SLAB ALONE IN PLACE) ↑ | 13/16" | 2 3/8" |
| DEFLECTION DUE TO ✳✳ SUPERIMPOSED DEAD LOAD ↓ | 1/8" | 3/8" |
| FINAL CAMBER ↑ | 11/16" | 2" |

✳✳ INCLUDES FUTURE WEARING SURFACE

## CORED SLABS REQUIRED

| | SPAN "A" | | SPAN "B" | | SPAN "C" | | |
|---|---|---|---|---|---|---|---|
| | NUMBER | LENGTH | NUMBER | LENGTH | NUMBER | LENGTH | TOTAL LENGTH |
| EXTERIOR C.S. | 2 | 37'-9 3/4" | 2 | 49'-10 1/2" | 2 | 37'-9 3/4" | 251'-0" |
| INTERIOR C.S. | 11 | 37'-9 3/4" | 11 | 49'-10 1/2" | 11 | 37'-9 3/4" | 1380'-6" |
| TOTAL | 13 | | 13 | | 13 | | 1631'-6" |

## GRADE 270 STRANDS

| | 1/2" Ø L.R. |
|---|---|
| AREA (SQUARE INCHES) | 0.153 |
| ULTIMATE STRENGTH (LBS. PER STRAND) | 41,300 |
| APPLIED PRESTRESS (LBS. PER STRAND) | 30,980 |

PROJECT NO. B-3848
GUILFORD COUNTY
STATION: 13+54.50 -L-

STATE OF NORTH CAROLINA
DEPARTMENT OF TRANSPORTATION
RALEIGH

# STANDARD 3'-0" X 1'-9" PRESTRESSED CONCRETE CORED SLAB UNIT

NORTH CAROLINA PROFESSIONAL SEAL 15825 ENGINEER BRUCE D. KLAPPENBACH
12-2-05

| REVISIONS | | | | | | | | SHEET NO. |
|---|---|---|---|---|---|---|---|---|
| NO. | BY: | DATE: | NO. | BY: | DATE: | | | S-14 |
| 1 | | | 3 | | | | | TOTAL SHEETS |
| 2 | | | 4 | | | | | 27 |

ASSEMBLED BY : J.B. WILSON/D.A.G DATE : 5/8/05
CHECKED BY : M.G. SHAIKH DATE : 10/12/05

DRAWN BY : WJH 4/89
CHECKED BY : FCJ 5/89

REV. 10/17/00 RWW/LES
REV. 7/10/01 RWW/LES
REV. 5/7/03RR RWW/JTE

01-DEC-2005 09:38
R:\STRUCT01\dgladden\MICROS01\B354101.DGN
dgladden

STD. NO. PCS3