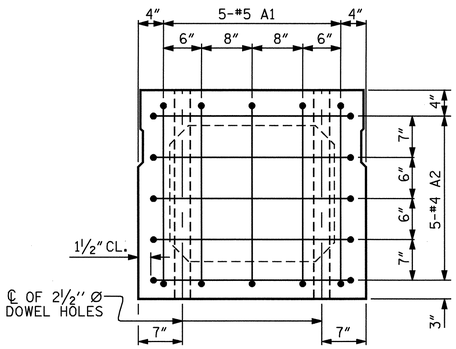

END ELEVATION

SHOWING PLACEMENT OF #5 & #4 "A" BARS AND LOCATION OF DOWEL HOLES. (INTERIOR BOX BEAM SECTION SHOWN-EXTERIOR SECTION SIMILAR EXCEPT SHEAR KEY LOCATION. STRAND LAYOUT NOT SHOWN.)

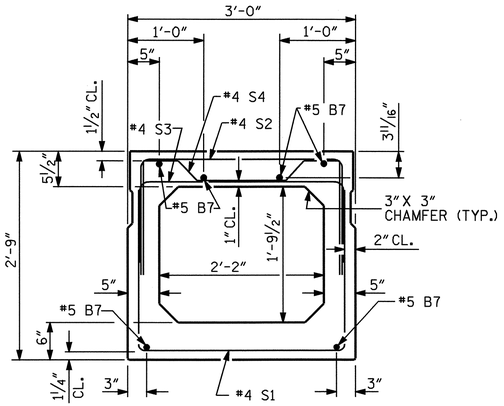

INTERIOR BOX BEAM SECTION

(STRAND LAYOUT NOT SHOWN)

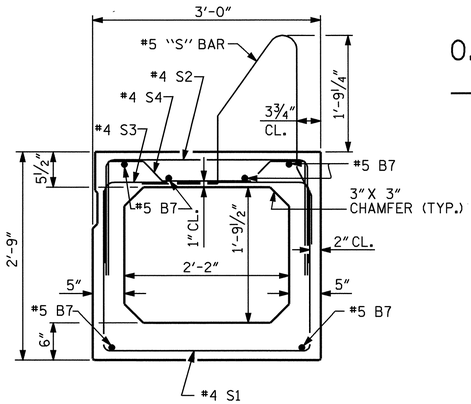

EXTERIOR BOX BEAM SECTION

(STRAND LAYOUT NOT SHOWN)

0.6" Ø LOW RELAXATION STRAND LAYOUT

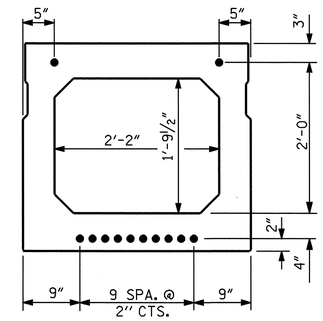

TYPICAL STRAND LOCATION

(12 STRANDS REQUIRED)

(INTERIOR BOX BEAM SECTION SHOWN-EXTERIOR SECTION SIMILAR EXCEPT SHEAR KEY LOCATION

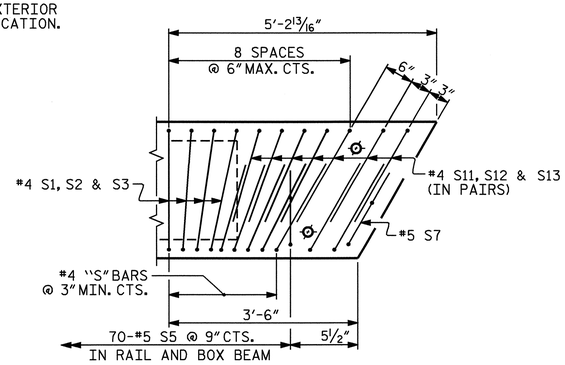

DETAIL "B"

EXTERIOR UNIT SHOWN, INTERIOR UNIT SIMILAR EXCEPT OMIT #5 S5 & S7 BARS. "B" BARS AND "A" BARS NOT SHOWN.

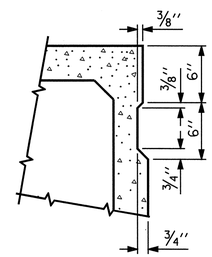

SHEAR KEY DETAIL

NOTE: OMIT SHEAR KEY ON OUTSIDE FACE OF EXTERIOR BOX BEAMS.

BAR TYPES

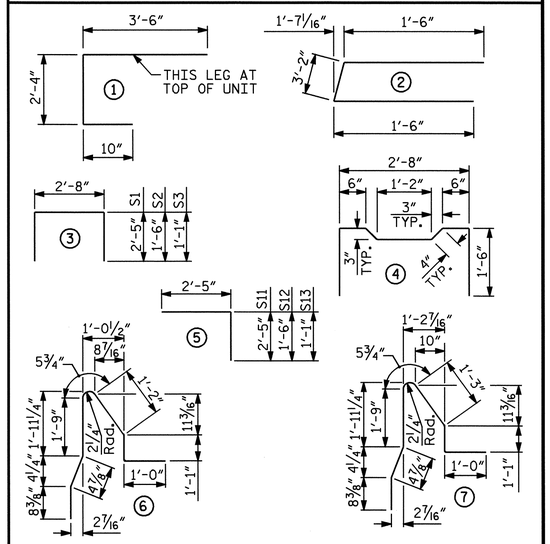

ALL BAR DIMENSIONS ARE OUT TO OUT

BILL OF MATERIAL FOR ONE BOX BEAM SECTION

				EXTERIOR UNIT		INTERIOR UNIT	
BAR	NUMBER	SIZE	TYPE	LENGTH	WEIGHT	LENGTH	WEIGHT
A1	10	#5	1	6'-8"	70	6'-8"	70
A2	10	#4	2	6'-2"	41	6'-2"	41
B7	6	#5	STR	53'-3"	333	53'-3"	333
S1	38	#4	3	7'-6"	190	7'-6"	190
S2	38	#4	3	5'-8"	144	5'-8"	144
S3	67	#4	3	4'-10"	216	4'-10"	216
S4	29	#4	4	5'-10"	113	5'-10"	113
S11	28	#4	5	4'-10"	90	4'-10"	90
S12	28	#4	5	3'-11"	73	3'-11"	73
S13	28	#4	5	3'-6"	65	3'-6"	65
✳ S5	70	#5	6	6'-7"	481	--	--
✳ S7	2	#5	7	6'-8"	14	--	--
REINFORCING STEEL					1335 LBS.		1335 LBS.
✳ EPOXY COATED REINF. STEEL					495 LBS.		
6000 P.S.I. CONCRETE					8.8 CU. YDS.		8.7 CU. YDS.
0.6" Ø L.R. STRANDS					No. 12		No. 12

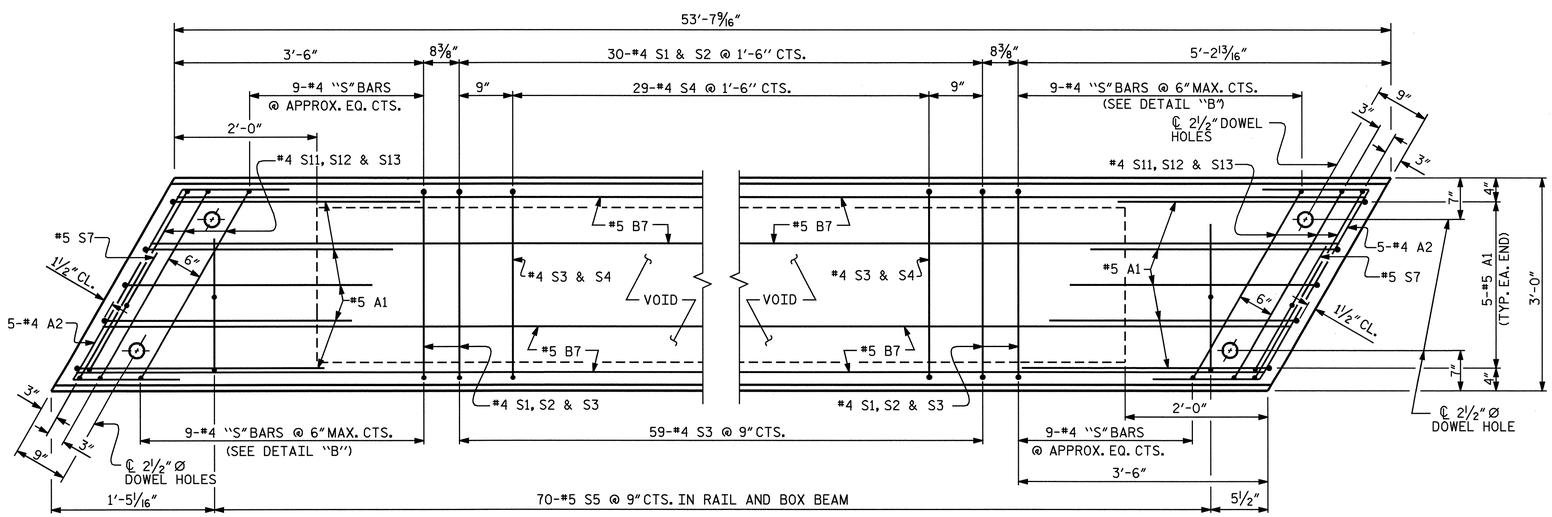

PLAN OF BOX BEAM

EXTERIOR UNIT SHOWN, INTERIOR UNIT SIMILAR EXCEPT OMIT #4 S5 & S7 BARS.
FOR LOCATION OF DIAPHRAGMS, SEE PLAN OF SPANS.
FOR REINFORCING STEEL IN DIAPHRAGMS, SEE DIAPHRAGM DETAILS.

PROJECT NO. B-3664
HENDERSON COUNTY
STATION: 20+95.00-L-

SHEET 8 OF 10

STATE OF NORTH CAROLINA
DEPARTMENT OF TRANSPORTATION
RALEIGH

3'-0" X 2'-9"
PRESTRESSED CONCRETE
BOX BEAM UNIT FOR SPAN C

120° SKEW

NORTH CAROLINA PROFESSIONAL SEAL 20125 ENGINEER MARSHALL G. CREEK, JR.
6-3-05

ASSEMBLED BY : V. X. NGUYEN	DATE : 3-15-05		
CHECKED BY : D. HODGE	DATE : 5-05		
DRAWN BY : TLA 3/05	ADDED		
CHECKED BY :			

REVISIONS						SHEET NO.
NO.	BY:	DATE:	NO.	BY:	DATE:	S-11
1			3			TOTAL SHEETS
2			4			27

03-JUN-2005 08:49
R:\STRUCT02\b3664\vnguyen\MICROS02\B-3664S2.DGN
vnguyen

STD. NO. PCBB4