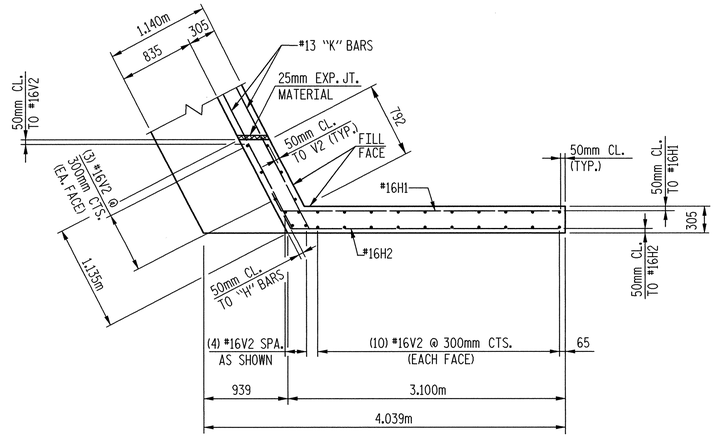

PLAN WING - W1

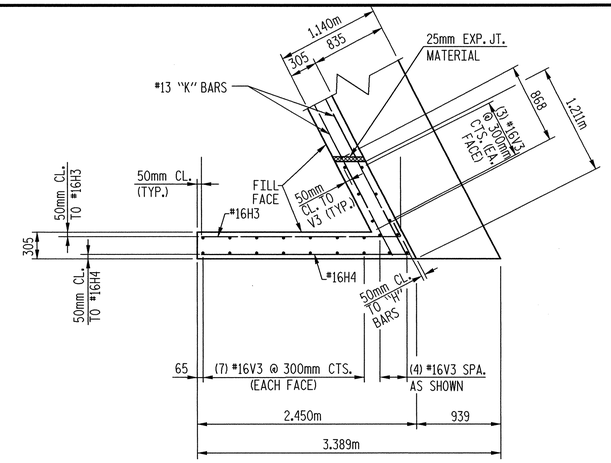

PLAN WING - W2

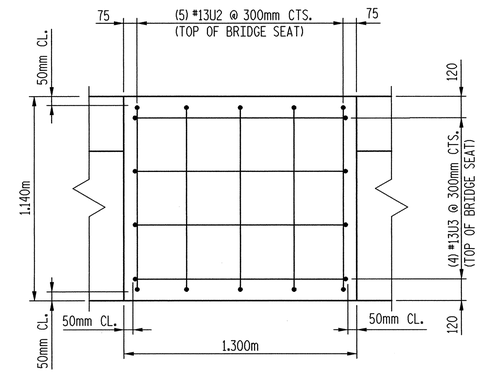

BRIDGE SEAT REINFORCEMENT

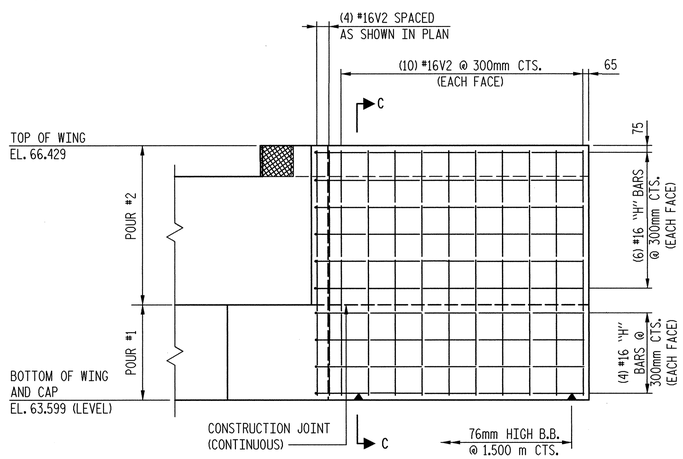

ELEVATION WING - W1

✻✻ PLACE #16 "H" BARS TO MATCH #16 "K" BARS IN BACKWALL

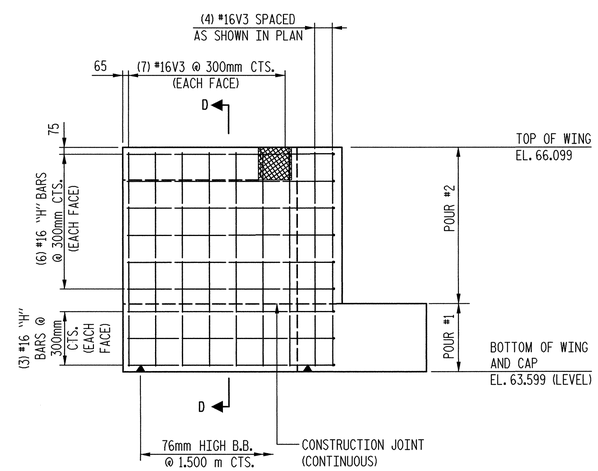

ELEVATION WING - W2

✻✻ PLACE #16 "H" BARS TO MATCH #16 "K" BARS IN BACKWALL

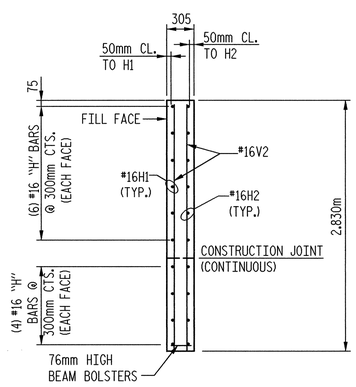

SECTION "C"

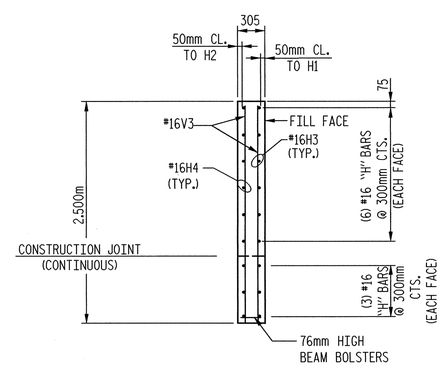

SECTION "D"

DRAWN BY : M. L. MARLEY DATE : 1/17/02
CHECKED BY : D.B. HOFF DATE : 12/25/00

PROJECT NO. R-2552AB
JOHNSTON COUNTY
STATION: 40+80.000 -L- P.O.C.
SHEET 2 OF 3

TRANSYSTEMS CORPORATION
75 Beattie Place, Suite 400
Greenville, SC 29601 (864) 234-0866

NORTH CAROLINA PROFESSIONAL SEAL 16335 ENGINEER DAVID B. HOFF

3/05

STATE OF NORTH CAROLINA
DEPARTMENT OF TRANSPORTATION
RALEIGH

SUBSTRUCTURE
END BENT #1
DETAILS
(LEFT LANE)

DWG. NO.	TOTAL
39	68

REVISIONS						SHEET NO.
NO.	BY:	DATE:	NO.	BY:	DATE:	5-298
1			3			TOTAL SHEETS
2			4			429