NOTES

APPROACH SLAB SHALL NOT BE CONSTRUCTED PRIOR TO COMPLETION OF THE BRIDGE DECK.

SUBDRAIN FINE AGGREGATE IS TO BE CONTINUOUS ALONG FILL FACE OF BACKWALL AND END BENT FROM OUTSIDE EDGE TO OUTSIDE EDGE OF APPROACH SLAB.

TEMPORARY DRAINAGE AND TEMPORARY BERM AND SLOPE DRAINS WILL BE PAID FOR UNDER THE LUMP SUM PRICE FOR BRIDGE APPROACH SLAB.

AREA BETWEEN THE WINGWALL AND APPROACH SLAB SHALL BE GRADED TO DRAIN THE WATER AWAY FROM THE FILL FACE OF THE BRIDGE.

THE 150mm COMP. A.B.C. SHALL EXTEND 3m BEYOND THE END OF THE APPROACH SLAB AND 300mm OUTSIDE OF EACH EDGE OF THE SLAB.

THE CONTRACTOR MAY USE 100mm TYPE B-25.0B ASPHALT CONCRETE COURSE IN LIEU OF 150mm COMP. A.B.C. IF THIS OPTION IS USED, THE BASE COURSE SHALL EXTEND 300mm BEYOND THE END OF THE APPROACH SLAB AND THE WIDTH SHALL BE THE SAME AS THAT OF THE APPROACH SLAB.

THE CONTRACTOR MAY USE 125mm CLASS "A" CONCRETE BASE IN LIEU OF 150mm COMP. A.B.C. IF THIS OPTION IS USED, THE CONCRETE BASE SHALL EXTEND 300mm BEYOND THE END OF THE APPROACH SLAB AND THE WIDTH SHALL BE THE SAME AS THAT OF THE APPROACH SLAB. THE CONCRETE SHALL BE FINISHED TO A SMOOTH SURFACE AND A LAYER OF 13.6 kg ROOFING FELT SHALL BE PLACED BETWEEN THE CONCRETE BASE AND THE APPROACH SLAB TO PREVENT BOND. THE APPROACH SLAB SHALL NOT BE CAST UNTIL THE CONCRETE BASE HAS REACHED AN AGE OF THREE CURING DAYS.

THE JOINT SHALL BE SAWED PRIOR TO THE CASTING OF THE BARRIER RAIL.

THE COST OF THE BARRIER RAIL ON THE APPROACH SLAB SHALL BE INCLUDED IN THE LUMP SUM CONTRACT PRICE BID FOR BRIDGE APPROACH SLABS.

FOR ELASTOMERIC CONCRETE, SEE SPECIAL PROVISIONS.

WITH EVAZOTE JOINT SEAL

FOR EVAZOTE JOINT SEALS, SEE SPECIAL PROVISIONS.

THE NOMINAL UNCOMPRESSED SEAL WIDTH OF THE EVAZOTE JOINT SEAL SHALL BE 64mm.

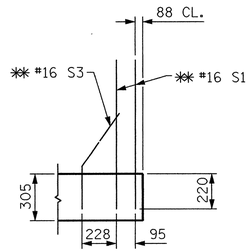

SECTION K-K

✱✱ ADHESIVELY ANCHORED

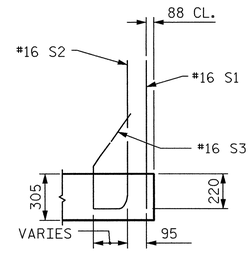

SECTION L-L

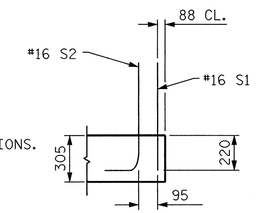

SECTION M-M

BILL OF MATERIAL

FOR ONE APPROACH SLAB (2 REQ'D)

BAR	NO.	SIZE	TYPE	LENGTH	WEIGHT
✱ A1	132	16	STR.	11680	2393
A2	132	13	STR.	11560	1517
✱ A100	1	16	STR.	11320	18
✱ A101	1	16	STR.	10980	17
✱ A102	1	16	STR.	10620	16
✱ A103	1	16	STR.	10280	16
✱ A104	1	16	STR.	9920	15
✱ A105	1	16	STR.	9580	15
✱ A106	1	16	STR.	9220	14
✱ A107	1	16	STR.	8880	14
✱ A108	1	16	STR.	8520	13
✱ A109	1	16	STR.	8180	13
✱ A110	1	16	STR.	7820	12
✱ A111	1	16	STR.	7480	12
✱ A112	1	16	STR.	7120	11
✱ A113	1	16	STR.	6780	11
✱ A114	1	16	STR.	6420	10
✱ A115	1	16	STR.	6080	9
✱ A116	1	16	STR.	5720	9
✱ A117	1	16	STR.	5380	8
✱ A118	1	16	STR.	5020	8
✱ A119	1	16	STR.	4680	7
✱ A120	1	16	STR.	4320	7
✱ A121	1	16	STR.	3980	6
✱ A122	1	16	STR.	3620	6
✱ A123	1	16	STR.	3280	5
✱ A124	1	16	STR.	2920	5
✱ A125	1	16	STR.	2580	4
✱ A126	1	16	STR.	2220	3
✱ A127	1	16	STR.	1880	3
✱ A128	1	16	STR.	1520	2
✱ A129	1	16	STR.	1180	2
✱ A130	1	16	STR.	820	1
✱ A131	1	16	STR.	480	1
✱ A132	1	16	STR.	11040	17
✱ A133	1	16	STR.	10700	17
✱ A134	1	16	STR.	10340	16
✱ A135	1	16	STR.	10000	16
✱ A136	1	16	STR.	9640	15
✱ A137	1	16	STR.	9300	14
✱ A138	1	16	STR.	8940	14

BAR	NO.	SIZE	TYPE	LENGTH	WEIGHT
✱ A139	1	16	STR.	8600	13
✱ A140	1	16	STR.	8240	13
✱ A141	1	16	STR.	7900	12
✱ A142	1	16	STR.	7540	12
✱ A143	1	16	STR.	7200	11
✱ A144	1	16	STR.	6840	11
✱ A145	1	16	STR.	6500	10
✱ A146	1	16	STR.	6140	10
✱ A147	1	16	STR.	5800	9
✱ A148	1	16	STR.	5440	8
✱ A149	1	16	STR.	5100	8
✱ A150	1	16	STR.	4740	7
✱ A151	1	16	STR.	4400	7
✱ A152	1	16	STR.	4040	6
✱ A153	1	16	STR.	3700	6
✱ A154	1	16	STR.	3340	5
✱ A155	1	16	STR.	3000	5
✱ A156	1	16	STR.	2640	4
✱ A157	1	16	STR.	2300	4
✱ A158	1	16	STR.	1940	3
✱ A159	1	16	STR.	1600	2
✱ A160	1	16	STR.	1240	2
✱ A161	1	16	STR.	900	1
✱ A162	1	16	STR.	540	1
A201	1	13	STR.	11200	11
A202	1	13	STR.	10860	11
A203	1	13	STR.	10500	10
A204	1	13	STR.	10160	10
A205	1	13	STR.	9800	10
A206	1	13	STR.	9460	9
A207	1	13	STR.	9100	9
A208	1	13	STR.	8760	9
A209	1	13	STR.	8400	8
A210	1	13	STR.	8060	8
A211	1	13	STR.	7700	8
A212	1	13	STR.	7360	7
A213	1	13	STR.	7000	7
A214	1	13	STR.	6660	7
A215	1	13	STR.	6300	6
A216	1	13	STR.	5960	6
A217	1	13	STR.	5600	6

BAR	NO.	SIZE	TYPE	LENGTH	WEIGHT
A218	1	13	STR.	5260	5
A219	1	13	STR.	4900	5
A220	1	13	STR.	4560	5
A221	1	13	STR.	4200	4
A222	1	13	STR.	3860	4
A223	1	13	STR.	3500	3
A224	1	13	STR.	3160	3
A225	1	13	STR.	2800	3
A226	1	13	STR.	2460	2
A227	1	13	STR.	2100	2
A228	1	13	STR.	1760	2
A229	1	13	STR.	1400	1
A230	1	13	STR.	1060	1
A231	1	13	STR.	700	1
A232	1	13	STR.	360	0
A233	1	13	STR.	11040	11
A234	1	13	STR.	10700	11
A235	1	13	STR.	10340	10
A236	1	13	STR.	10000	10
A237	1	13	STR.	9640	10
A238	1	13	STR.	9300	9
A239	1	13	STR.	8940	9
A240	1	13	STR.	8600	9
A241	1	13	STR.	8240	8
A242	1	13	STR.	7900	8
A243	1	13	STR.	7540	7
A244	1	13	STR.	7200	7
A245	1	13	STR.	6840	7
A246	1	13	STR.	6500	6
A247	1	13	STR.	6140	6
A248	1	13	STR.	5800	6
A249	1	13	STR.	5440	5
A250	1	13	STR.	5100	5
A251	1	13	STR.	4740	5
A252	1	13	STR.	4400	4
A253	1	13	STR.	4040	4
A254	1	13	STR.	3700	4
A255	1	13	STR.	3340	3
A256	1	13	STR.	3000	3
A257	1	13	STR.	2640	3
A258	1	13	STR.	2300	2
A259	1	13	STR.	1940	2
A260	1	13	STR.	1600	2
A261	1	13	STR.	1240	1
A262	1	13	STR.	900	1
A263	1	13	STR.	540	1
✱ B100	1	19	STR.	3500	8
✱ B101	3	19	STR.	7280	49
✱ B102	3	19	STR.	7480	50
✱ B103	3	19	STR.	7660	51
✱ B104	3	19	STR.	7860	53
✱ B105	3	19	STR.	8060	54
✱ B106	3	19	STR.	8240	55
✱ B107	3	19	STR.	8440	57
✱ B108	3	19	STR.	8640	58
✱ B109	3	19	STR.	8820	59
✱ B110	3	19	STR.	9020	60
✱ B111	3	19	STR.	9220	62
✱ B112	3	19	STR.	9400	63
✱ B113	3	19	STR.	9600	64
✱ B114	3	19	STR.	9800	66
✱ B115	3	19	STR.	9980	67
✱ B116	3	19	STR.	10180	68
✱ B117	3	19	STR.	10360	69
✱ B118	3	19	STR.	10560	71
✱ B119	3	19	STR.	10760	72
✱ B120	3	19	STR.	10940	73
✱ B121	3	19	STR.	11140	75
✱ B122	3	19	STR.	11340	76
✱ B123	3	19	STR.	11520	77
✱ B124	3	19	STR.	11720	79
✱ B125	3	19	STR.	11920	80
✱ B126	3	19	STR.	12100	81
✱ B127	3	19	STR.	12300	82
✱ B128	3	19	STR.	12500	84
✱ B129	3	19	STR.	12680	85
✱ B130	3	19	STR.	12880	86
✱ B131	3	19	STR.	13080	88

BAR	NO.	SIZE	TYPE	LENGTH	WEIGHT
✱ B132	3	19	STR.	13260	89
✱ B133	3	19	STR.	13460	90
✱ B134	3	19	STR.	13660	92
✱ B135	3	19	STR.	13840	93
✱ B136	3	19	STR.	14040	94
✱ B137	3	19	STR.	14220	95
✱ B138	3	19	STR.	14420	97
✱ B139	3	19	STR.	14620	98
✱ B140	3	19	STR.	14800	99
✱ B141	3	19	STR.	15000	101
✱ B142	3	19	STR.	15200	102
✱ B143	3	19	STR.	15380	103
✱ B144	3	19	STR.	15580	104
✱ B145	3	19	STR.	15780	106
✱ B146	3	19	STR.	15960	107
✱ B147	3	19	STR.	16160	108
✱ B148	3	19	STR.	16360	110
✱ B149	3	19	STR.	16540	111
✱ B150	3	19	STR.	16740	112
B200	1	25	STR.	3500	14
B201	3	25	STR.	7280	87
B202	3	25	STR.	7480	89
B203	3	25	STR.	7660	91
B204	3	25	STR.	7860	94
B205	3	25	STR.	8060	96
B206	3	25	STR.	8240	98
B207	3	25	STR.	8440	101
B208	3	25	STR.	8640	103
B209	3	25	STR.	8820	105
B210	3	25	STR.	9020	108
B211	3	25	STR.	9220	110
B212	3	25	STR.	9400	112
B213	3	25	STR.	9600	114
B214	3	25	STR.	9800	117
B215	3	25	STR.	9980	119
B216	3	25	STR.	10180	121
B217	3	25	STR.	10360	123
B218	3	25	STR.	10560	126
B219	3	25	STR.	10760	128
B220	3	25	STR.	10940	130
B221	3	25	STR.	11140	133
B222	3	25	STR.	11340	135
B223	3	25	STR.	11520	137
B224	3	25	STR.	11720	140
B225	3	25	STR.	11920	142
B226	3	25	STR.	12100	144
B227	3	25	STR.	12300	147
B228	3	25	STR.	12500	149
B229	3	25	STR.	12680	151
B230	3	25	STR.	12880	154
B231	3	25	STR.	13080	156
B232	3	25	STR.	13260	158
B233	3	25	STR.	13460	160
B234	3	25	STR.	13660	163
B235	3	25	STR.	13840	165
B236	3	25	STR.	14040	167

BAR	NO.	SIZE	TYPE	LENGTH	WEIGHT
B237	3	25	STR.	14220	169
B238	3	25	STR.	14420	172
B239	3	25	STR.	14620	174
B240	3	25	STR.	14800	176
B241	3	25	STR.	15000	179
B242	3	25	STR.	15200	181
B243	3	25	STR.	15380	183
B244	3	25	STR.	15580	186
B245	3	25	STR.	15780	188
B246	3	25	STR.	15960	190
B247	3	25	STR.	16160	193
B248	3	25	STR.	16360	195
B249	3	25	STR.	16540	197
B250	3	25	STR.	16740	200
✱ G1	1	16	STR.	24460	38
✱ S1	58	16	STR.	980	88
✱ S2	42	16	1	1220	80
✱ S3	20	16	STR.	680	21
✱ B1	7	16	STR.	3600	39
✱ B2	7	16	STR.	3520	38
✱ B3	1	16	3	1940	3
✱ B4	1	16	3	2040	3

REINFORCING STEEL	kg.	9049
✱ EPOXY COATED REINFORCING STEEL	kg.	7308

CLASS AA CONCRETE BREAKDOWN

POUR 1 SLAB	C.M.	87.0
POUR 2 RAIL	C.M.	1.6
CLASS AA CONCRETE	C.M.	88.6

BAR TYPES

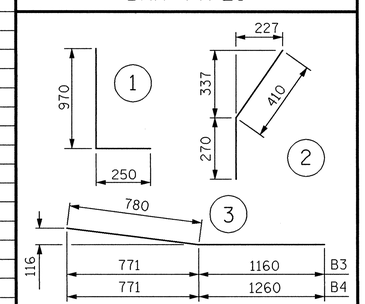

ALL BAR DIMENSIONS ARE OUT TO OUT

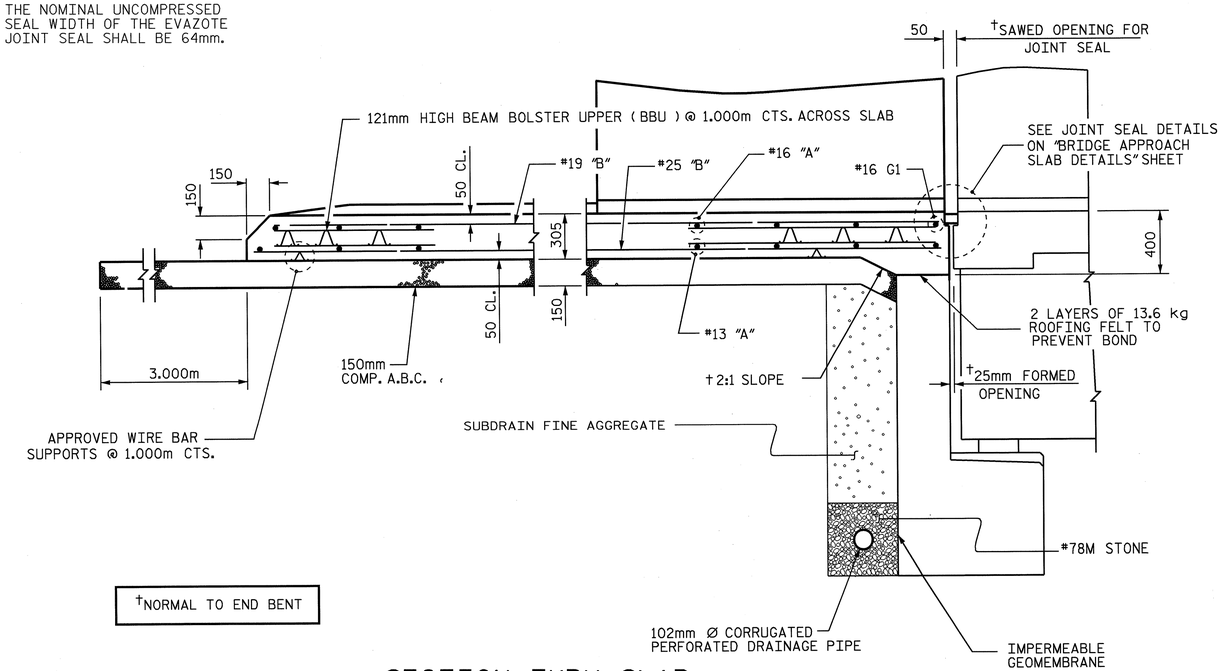

†NORMAL TO END BENT

SECTION THRU SLAB

DRAWN BY : D.F. HOLMES DATE : 3/05
CHECKED BY : DATE : 3/05

PROJECT NO. R-2552AB
JOHNSTON COUNTY
STATION: 52+34.693 -L- = 18+60.011 -Y2-

TRANSYSTEMS CORPORATION
75 Beattie Place, Suite 400
Greenville, SC 29601 (864) 234-0866

NORTH CAROLINA PROFESSIONAL SEAL 16335 ENGINEER DAVID B. HOFF
3-28-06

STATE OF NORTH CAROLINA
DEPARTMENT OF TRANSPORTATION
RALEIGH

BRIDGE APPROACH SLAB FOR FLEXIBLE PAVEMENT WITH BARRIER RAIL

REVISIONS								SHEET NO.
NO.	BY:	DATE:	NO.	BY:	DATE:			S-426
1			3					TOTAL SHEETS
2			4					429

28 of 31

g:\CV04\0125\Bridge\Site2\Final\11.25.03\R2552BappMODdbh.dgn
3/28/2005
3:31:02 PM