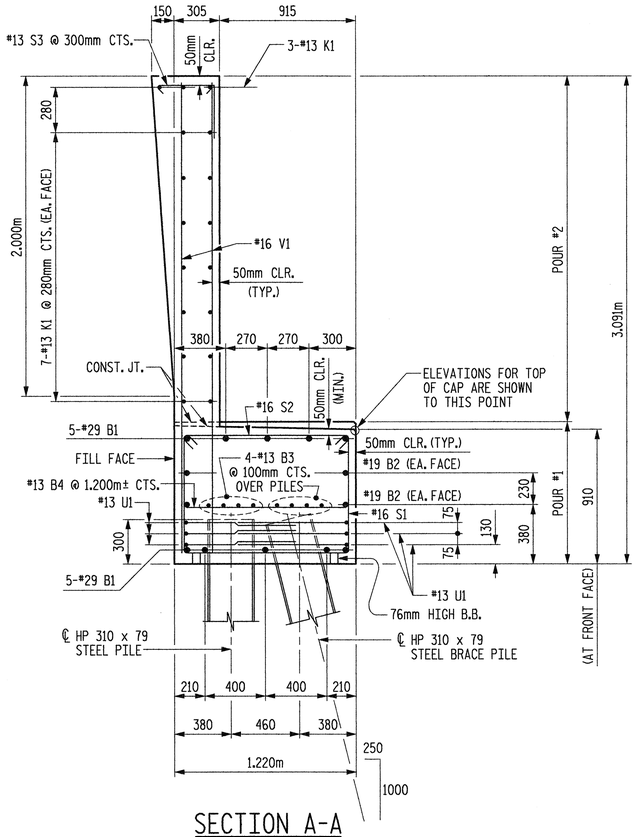

SECTION A-A

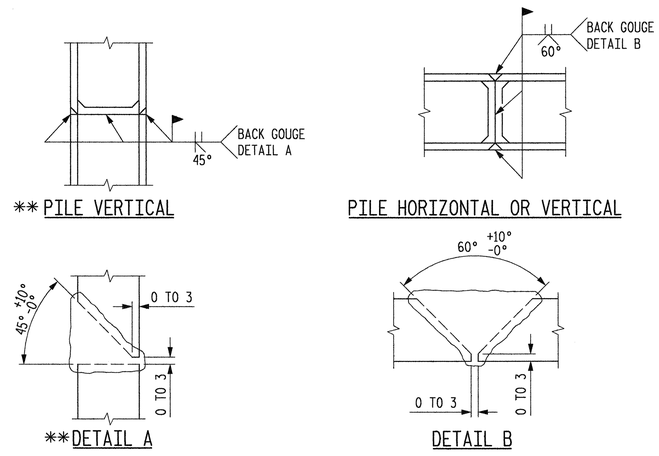

**POSITION OF PILE DURING WELDING

PILE SPLICE DETAILS

BAR TYPES

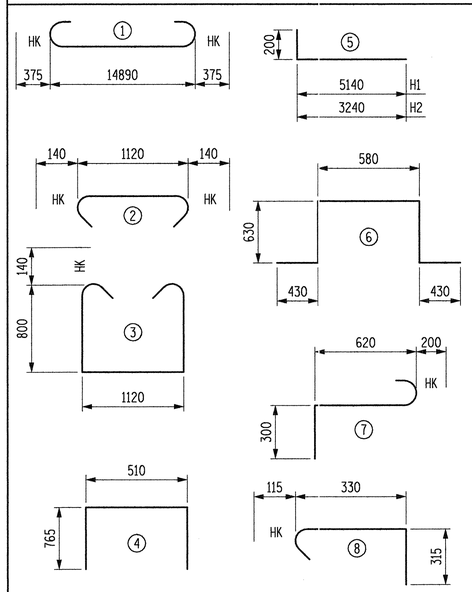

ALL BAR DIMENSIONS ARE OUT TO OUT.

BILL OF MATERIAL

END BENT #1

BAR	NO.	SIZE	TYPE	LENGTH	WEIGHT
B1	10	29	1	15640	791
B2	4	19	STR	14900	133
B3	16	13	STR	7820	124
B4	13	13	STR	1120	14
H1	28	16	5	5340	232
H2	28	16	5	3440	149
H3	8	13	STR	880	7
K1	34	13	STR	7820	264
S1	48	16	3	3000	223
S2	48	16	2	1400	104
S3	48	13	8	760	36
S4	3	19	7	1120	8
S5	1	19	6	2700	6
U1	36	13	4	2040	73
V1	88	16	STR	2980	407
V2	64	16	STR	2020	201
V3	12	16	STR	3360	63
V4	40	16	STR	2060	128
V5	10	16	STR	3440	53

REINFORCING STEEL 3016 kg

CLASS A CONCRETE BREAKDOWN
POUR #1 (CAP & WING) 19.6 CU. METERS
POUR #2 (BACKWALL & WING) 18.6 CU. METERS
TOTAL CLASS A CONCRETE 38.2 CU. METERS

HP 310 x 79 STEEL PILES
NO. 13 189.0 LIN. METERS

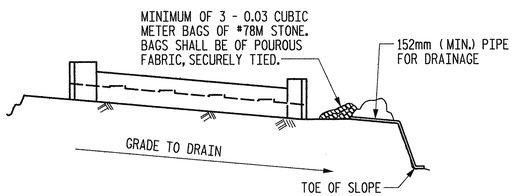

BAGGED STONE AND PIPE SHALL BE PLACED IMMEDIATELY AFTER COMPLETION OF END BENT EXCAVATION. PIPE MAY BE EITHER CONCRETE, CORRUGATED STEEL, CORRUGATED ALUMINUM ALLOY, OR CORRUGATED PLASTIC. PERFORATED PIPE WILL NOT BE ALLOWED.

BAGGED STONE SHALL REMAIN IN PLACE UNTIL THE ENGINEER DIRECTS THAT IT BE REMOVED. THE CONTRACTOR SHALL REMOVE AND DISPOSE OF SILT ACCUMULATIONS AT BAGGED STONE WHEN SO DIRECTED BY THE ENGINEER. BAGS SHALL BE REMOVED AND REPLACED WHENEVER THE ENGINEER DETERMINES THAT THEY HAVE DETERIORATED AND LOST THEIR EFFECTIVENESS.

NO SEPARATE PAYMENT WILL BE MADE FOR THIS WORK AND THE ENTIRE COST OF THIS WORK SHALL BE INCLUDED IN THE UNIT CONTRACT PRICE BID FOR THE SEVERAL PAY ITEMS.

TEMPORARY DRAINAGE AT END BENT

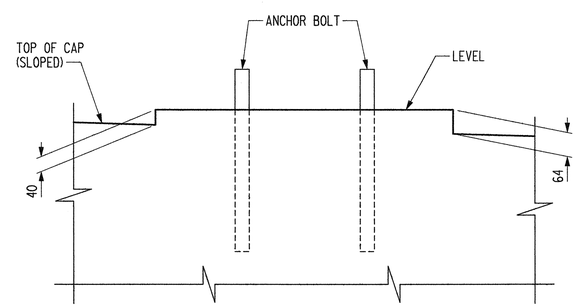

DETAIL "B"

PROJECT NO. R-2552AA
WAKE-JOHNSTON COUNTY
STATION: 28+31.359 -I1Y1-

SHEET 3 OF 3

STATE OF NORTH CAROLINA
DEPARTMENT OF TRANSPORTATION
RALEIGH

SUBSTRUCTURE
END BENT #1

METRIC

Plans prepared by:
KO & ASSOCIATES, P.C.
Consulting Engineers
1011 SCHAUB DR., SUITE #202
RALEIGH, N.C. 27606
For Division of Highways

NORTH CAROLINA PROFESSIONAL SEAL 5601 ENGINEER CHIH KUO KO 01/28/05

DWG. NO. 36

REVISIONS								SHEET NO.
NO.	BY:	DATE:	NO.	BY:	DATE:			S-119
1			3					TOTAL SHEETS
2			4					129

DRAWN BY B.E. LANNING DATE JAN. 2005
CHECKED BY J.C. KO / A.K. ORR DATE JAN. 2005

PLOT: 01/27/2005 03:26:59 PM Ko & Associates, P.C.
FILE NAME: r:\r2552aa_sd_e1c_03.dgn