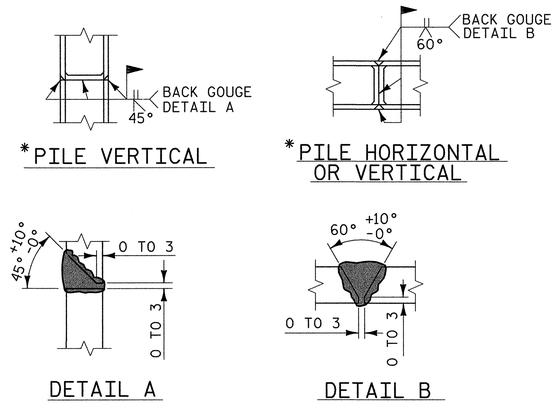

*POSITION OF PILE DURING WELDING.

PILE SPLICE DETAILS

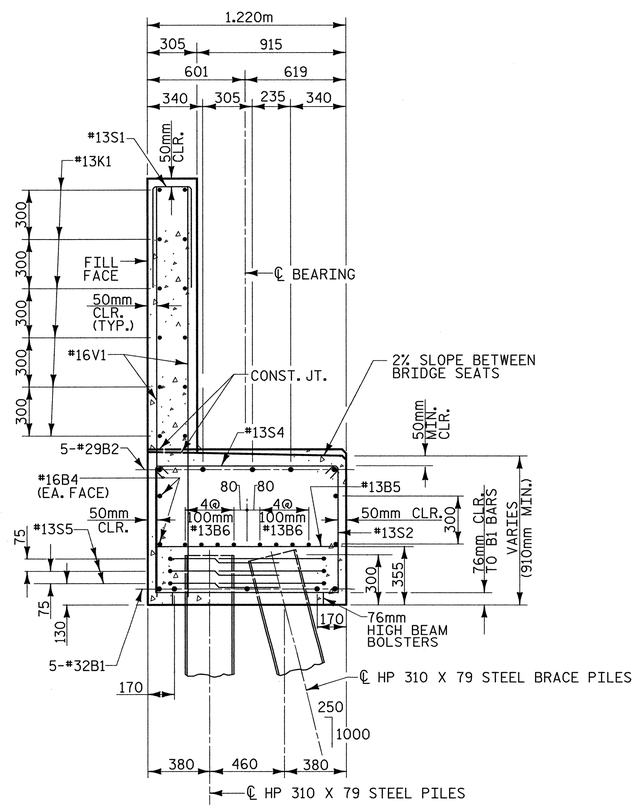

SECTION A-A

BAR TYPES

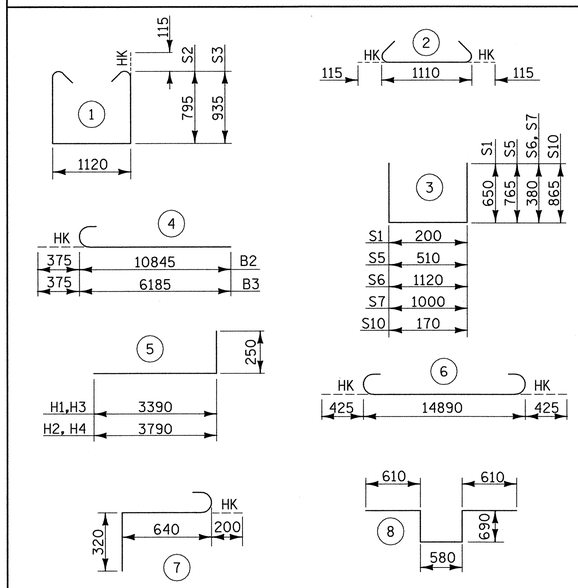

ALL BAR DIMENSIONS ARE OUT TO OUT

BILL OF MATERIAL

FOR END BENT 1

BAR	NO.	SIZE	TYPE	LENGTH	WEIGHT
B1	5	#32	6	15740	504
B2	5	#29	4	11220	223
B3	5	#29	4	6560	130
B4	4	#16	STR	14880	92
B5	13	#13	STR	1120	14
B6	16	#13	STR	7820	124
H1	20	#13	5	3640	72
H2	20	#13	5	4040	80
H3	4	#16	5	3640	23
H4	4	#16	5	4040	25
K1	24	#13	STR	7820	187
S1	44	#13	3	1500	66
S2	26	#13	1	2940	76
S3	18	#13	1	3220	58
S4	44	#13	2	1340	59
S5	30	#13	3	2040	61
S6	8	#13	3	1880	15
S7	10	#13	3	1760	17
S8	2	#19	8	3180	14
S9	6	#19	7	1160	16
S10	4	#13	3	1900	8
V1	88	#16	STR	2440	333
V2	14	#16	STR	2840	62
V3	21	#13	STR	2840	59
V4	20	#16	STR	3100	96
V5	22	#13	STR	3100	68

TOTAL REINFORCING STEEL = 2482 kg

CLASS "A" CONCRETE - CU. METERS

POUR 1	20.7 cu. m
POUR 2	12.5 cu. m
TOTAL	33.2 cu. m

HP 310 X 79 STEEL PILES

12 PILES REQUIRED - 108 LIN. METERS

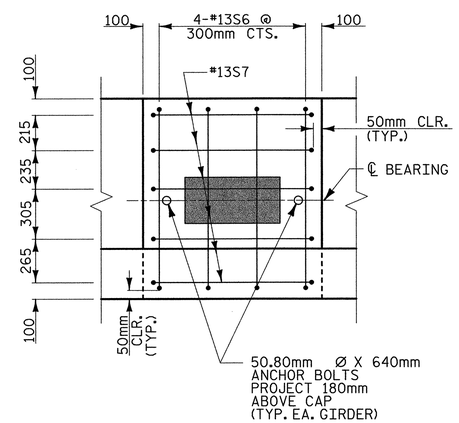

SEAT DETAIL

(TYP. SEATS 2 & 4)

METRIC

PROJECT NO. R-2552AA

WAKE - JOHNSTON COUNTY

STATION: 14+38.000 -LREV- POT

SHEET 3 OF 3

STATE OF NORTH CAROLINA
DEPARTMENT OF TRANSPORTATION
RALEIGH

SUBSTRUCTURE END BENT 2 (LEFT LANE)

PLANS PREPARED BY:
MULKEY ENGINEERS & CONSULTANTS
PO Box 33127
Raleigh, N.C. 27636
(919) 851-1912
(919) 851-1918 (FAX)
WWW.MULKEYINC.COM

NORTH CAROLINA PROFESSIONAL SEAL 14116 ENGINEER ROBERT C. LARSON
2/11/05

REFERENCE NO. BL-38

REVISIONS							SHEET NO.
NO.	BY:	DATE:	NO.	BY:	DATE:		S-177
1			3				TOTAL SHEETS
2			4				429

DRAWN BY : J. P. SHERMAN DATE : 12/04
CHECKED BY : R. C. LARSON DATE : 12/04

02/04/2005 02:56:23 PM G:\project\2004\03.DIR-2552\Structures\Site 4\Left Lane\R2552AA_SD_E2_03.dgn