PROJECT REFERENCE NO.	SHEET NO.
R-2552AB	2-A

ROADWAY DESIGN ENGINEER — NORTH CAROLINA PROFESSIONAL SEAL 24912 ENGINEER KEVIN E. MOORE — 3/17/05

PAVEMENT DESIGN ENGINEER — NORTH CAROLINA PROFESSIONAL SEAL 22896 ENGINEER CLARK S. MORRISON — 3/17/05

METRIC

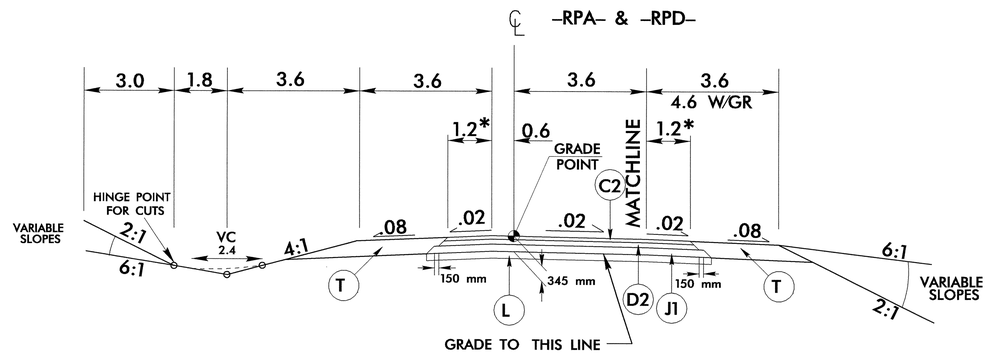

TYPICAL SECTION NO. 2

*FULL DEPTH PAVED SHOULDER

NOTE: USE DITCH DETAIL U IN CONJUNCTION WITH TS NO 2
-RPD- 13+70 TO 14+20

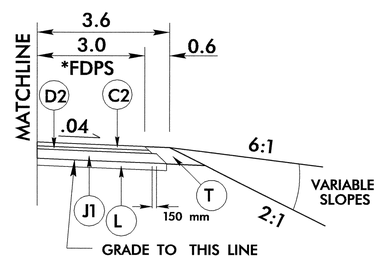

TYPICAL SECTION NO. 2A

*FULL DEPTH PAVED SHOULDER

T.S. 2A TO BE USED IN CONJUNCTION WITH
T.S. NO. 2 & 3 IN THE FOLLOWING LOCATIONS:

-RPB- 10+000 TO 15+94.234 (NOTE: USE T.S. NO. 4 PAVEMENT DESIGN)
-RPD- 10+000 TO 16+21.407 (REVERSE TYPICAL) (NOTE: USE T.S. NO. 3 PAVEMENT DESIGN)

USE TYPICAL SECTION NO. 2 AS FOLLOWS:

-RPA- 10+000 TO 14+91.683
-RPD- 10+000 TO 16+21.407 (REVERSE TYPICAL)

NOTE : SEE PARTIAL TYPICAL SECTION NO. 3A FOR
-RPD- 10+000 TO 16+21.407

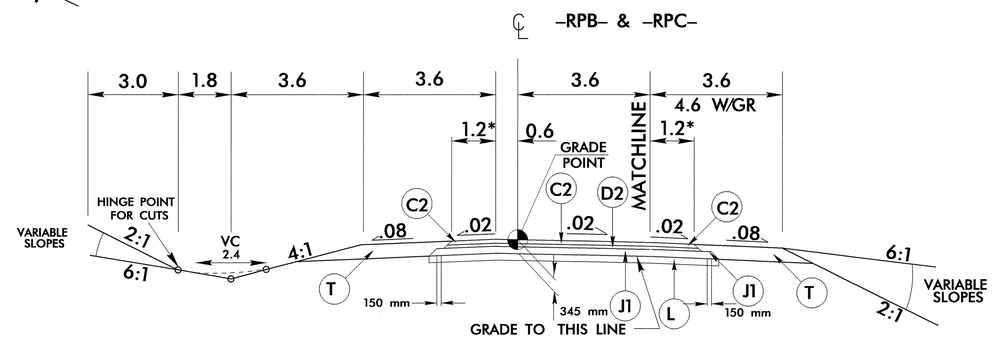

TYPICAL SECTION NO. 3

*FULL DEPTH PAVED SHOULDER

USE TYPICAL SECTION NO. 3 AS FOLLOWS:

-RPB- 10+000 TO 15+94.234 (REVERSE TYPICAL)
-RPC- 10+000 TO 14+80.943

NOTE : SEE PARTIAL TYPICAL SECTION NO. 2A FOR
-RPB- 10+000 TO 15+94.234

NOTE: USE DITCH DETAIL U IN CONJUNCTION WITH TS NO 3
-RPC- 13+00 TO 14+60

	PAVEMENT SCHEDULE
C1	70 mm S9.5B
C2	80 mm S9.5C
C3	100 mm S12.5C
C4	VAR. DEPTH S9.5C
C5	40 mm S9.5C
D1	65 mm I19.0B
D2	65 mm I19.0C
D3	80 mm I19.0C
D4	100 mm I19.0C
D5	VAR. DEPTH I19.0C
E1	90 mm B25.0C
E2	100 mm B25.0C
E3	180 mm B25.0C
E4	VAR. DEPTH B25.0C
J1	200 mm AGGREGATE BASE COURSE.
J2	250 mm AGGREGATE BASE COURSE.
J3	VAR. DEPTH AGGREGATE BASE CORSE.
L	SUBGRADE STABILIZATION
P	PRIME COAT
R	125 mm MONO. CONC ISLAND
T	EARTH MATERIAL
U	EXISTING PAVEMENT
W	VARIABLE DEPTH ASPHALT PAVEMENT

NOTE:
PAVEMENT EDGE SLOPES ARE 1:1
UNLESS SHOWN OTHERWISE.

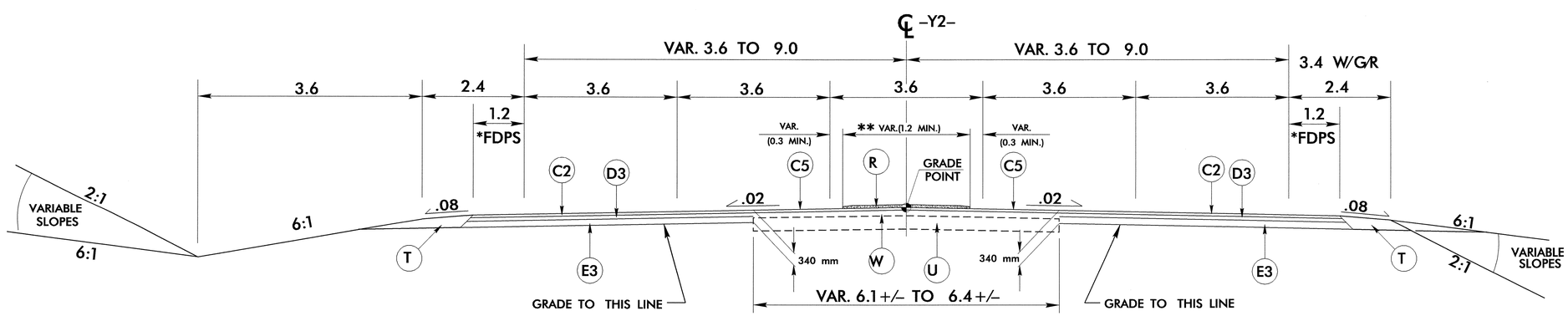

** 125 mm MONOLITHIC CONC. ISLAND
SEE PLANS FOR LOCATIONS

TYPICAL SECTION NO. 4

*FULL DEPTH PAVED SHOULDER

USE TYPICAL SECTION NO. 4 AS FOLLOWS:

-Y2- 13+55.000 TO 15+05 +/-
-Y2- 21+75 +/- TO 24+00.000
** SEE PLANS FOR LOCATION

6/16/99

15-MAR-2005 (JOB) r2552ab.tsp
HEdwards AP R02HA565