12-JUL-2004 15:07
W:\Special Details\ericward\stds\02'Stds to Special Details\metric\86202\0862d02m.dgn
ericward AT DS212260

6/10/99

STATE OF NORTH CAROLINA
DEPT. OF TRANSPORTATION
DIVISION OF HIGHWAYS
RALEIGH, N.C.

METRIC DETAIL DRAWING FOR
GUARDRAIL INSTALLATION

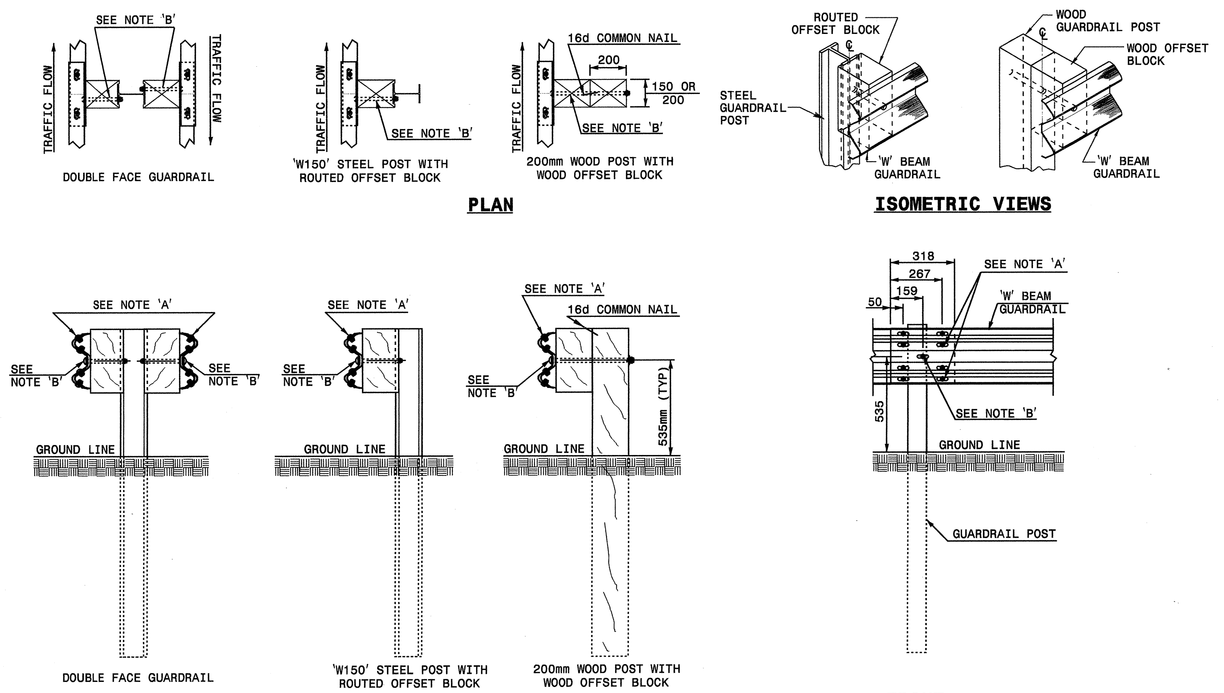

NOTES:
A - 16mm DIA. BUTTON HEAD SPLICE BOLT 32mm LONG WITH STD. WASHER UNDER NUT (8 REQ. PER SPLICE JOINT).
B - 16mm DIA. BUTTON HEAD BOLT 190mm/228mm LONG WITH NUT FOR BOLTING 150mm/200mm ROUTED OFFSET BLOCK TO STEEL POSTS OR 16mm DIA. BUTTON HEAD BOLT 457mm LONG WITH STD. WASHER UNDER NUT FOR BOLTING TO WOOD POSTS (1 REQ. PER LOCATION)
C - FIELD PUNCH HOLES INTO THE GUARDRAIL AS DIRECTED BY THE ENGINEER.

Note:
This drawing is dimensioned in millimeters unless otherwise depicted within the drawing.

TYPICAL GUARDRAIL AND GUARDRAIL POST ALTERNATIVES

SHEET 3 OF 7
862D02

STATE OF NORTH CAROLINA
DEPT. OF TRANSPORTATION
DIVISION OF HIGHWAYS
RALEIGH, N.C.

METRIC DETAIL DRAWING FOR
GUARDRAIL INSTALLATION

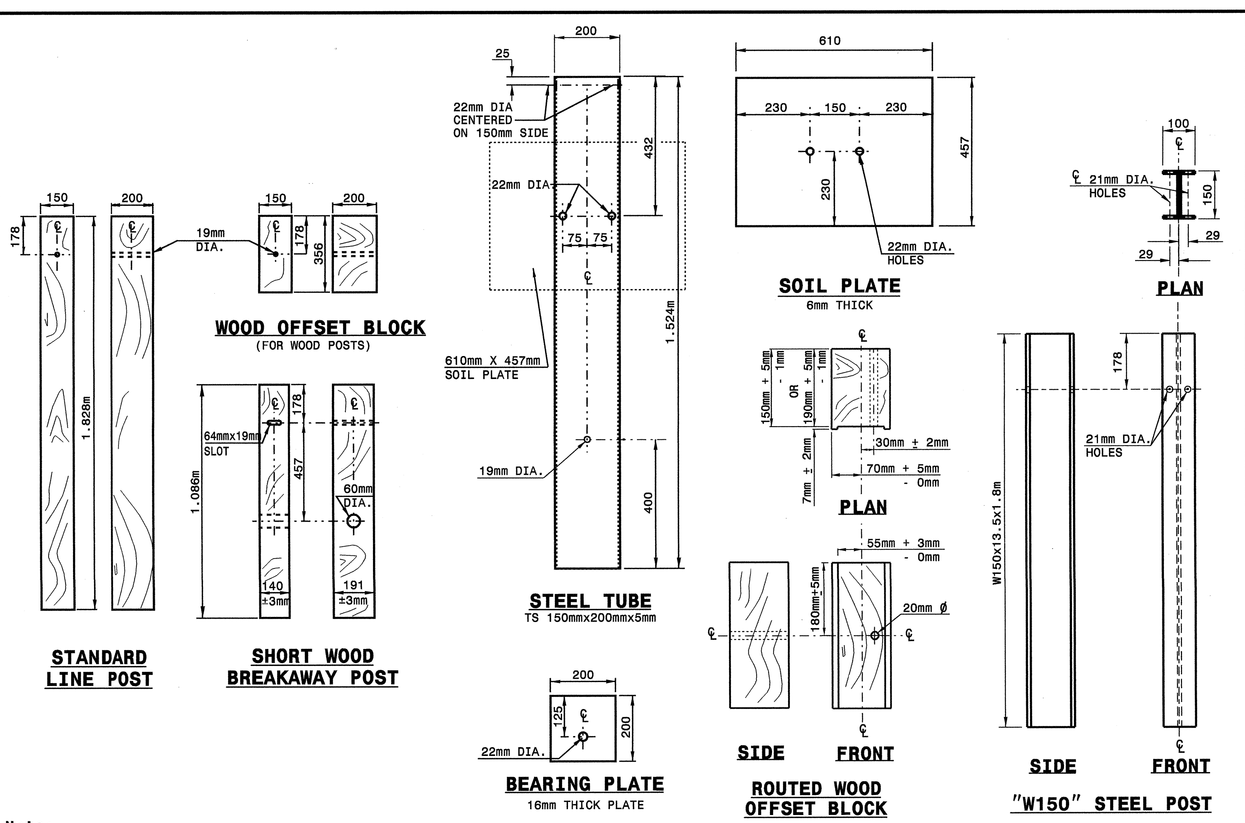

Note:
This drawing is dimensioned in millimeters unless otherwise depicted within the drawing.

SYSTEM PARTS

SHEET 4 OF 7
862D02

STATE OF NORTH CAROLINA
DEPT. OF TRANSPORTATION
DIVISION OF HIGHWAYS
RALEIGH, N.C.

METRIC DETAIL DRAWING FOR
GUARDRAIL INSTALLATION

DESIGN SERVICES UNIT
STANDARDS AND SPECIAL DESIGN
Office 919-250-4128 FAX 919-250-4119

SEE PLATE FOR TITLE

ORIGINAL BY: 2002 STD.862.02 DATE:
MODIFIED BY: E.E. WARD DATE: 02-09-03
CHECKED BY: DATE: 7/3/04
FILE SPEC.: /dsr/stds/02todetail/metric/86202/862d02m.dgn

NORTH CAROLINA PROFESSIONAL ENGINEER SEAL 022966 JOEL S. HOWERTON
3/18/05

PROJECT REFERENCE NO. R-2552AB
SHEET NO. 2-R
METRIC