12-APR-2004 07:59
W:\Special Details\ericward\stds\02'Stds to Special Details\metric\85701\857d01m.dgn
ericward AT DS21.260

STATE OF NORTH CAROLINA
DEPT. OF TRANSPORTATION
DIVISION OF HIGHWAYS
RALEIGH, N.C.

METRIC DETAIL DRAWING FOR
PRECAST REINFORCED CONCRETE BARRIER
1.0m SINGLE FACED

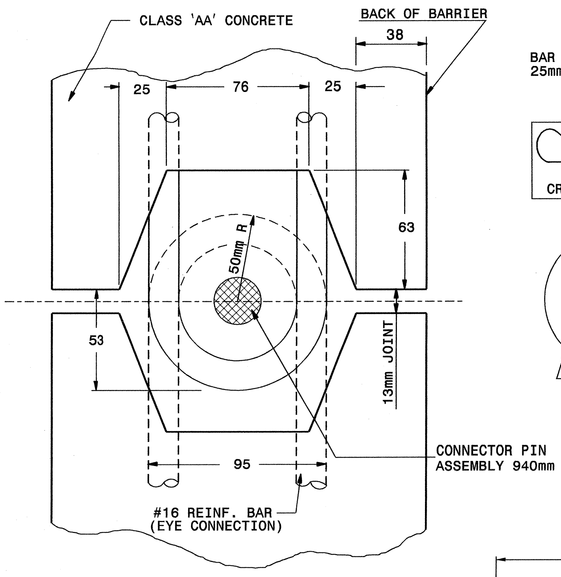

GROOVE END AND PIN & EYE CONNECTION DETAILS

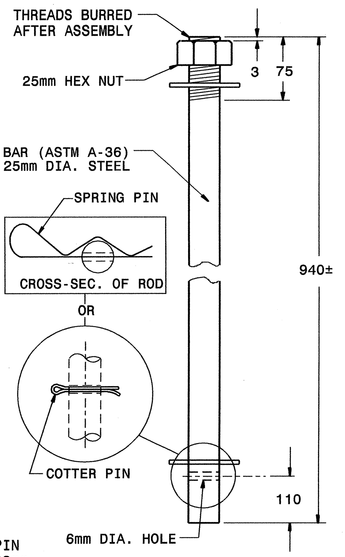

CONNECTOR PIN ASSEMBLY

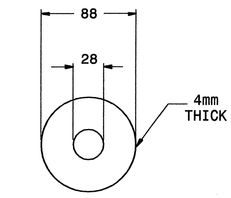

PLAIN GALVANIZED STEEL WASHER FOR 25mm PIN

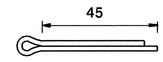

5mm SAE STD. COTTER PIN

SPRING PIN

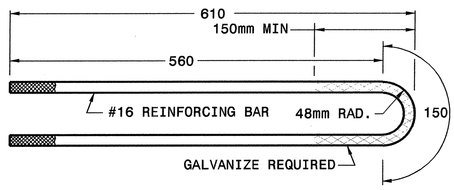

DETAIL OF REINFORCING EYE BAR

Note:
This drawing is dimensioned in millimeters unless otherwise depicted within the drawing.

SHEET 7 OF 8
857D01

STATE OF NORTH CAROLINA
DEPT. OF TRANSPORTATION
DIVISION OF HIGHWAYS
RALEIGH, N.C.

METRIC DETAIL DRAWING FOR
PRECAST REINFORCED CONCRETE BARRIER
1.0m SINGLE FACED

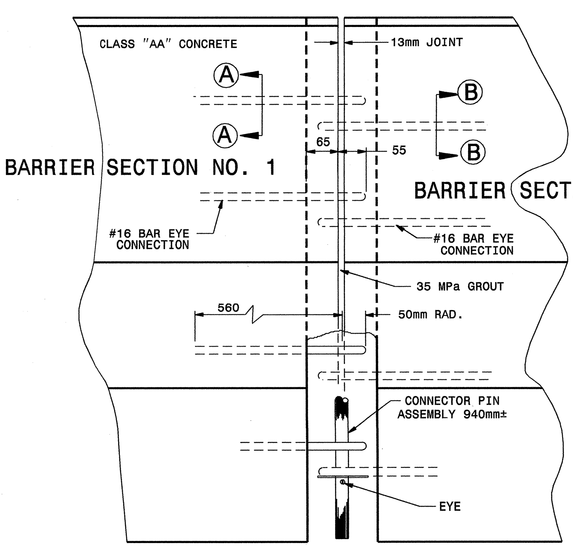

NOTE:
SEE SHEET 9 FOR DETAILS OF CONNECTOR PIN ASSEMBLIES.

JOINT VIEW ELEVATION

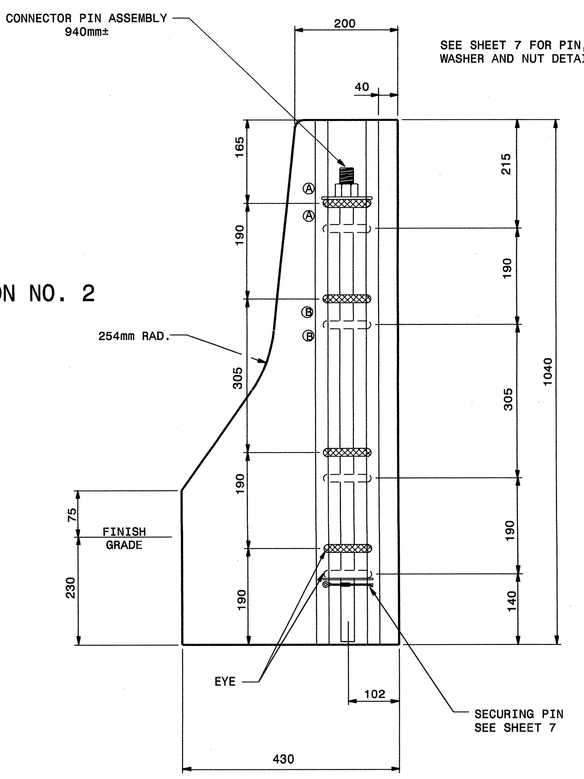

END VIEW

Note:
This drawing is dimensioned in millimeters unless otherwise depicted within the drawing.

SHEET 8 OF 8
857D01

STATE OF NORTH CAROLINA
DEPT. OF TRANSPORTATION
DIVISION OF HIGHWAYS
RALEIGH, N.C.

METRIC DETAIL DRAWING FOR
PRECAST REINFORCED CONCRETE BARRIER
1.0m SINGLE FACED

DESIGN SERVICES UNIT
STANDARDS AND SPECIAL DESIGN
Office 919-250-4128 FAX 919-250-4119

SEE PLATE FOR TITLE

ORIGINAL BY: 2002 STD. 857.01 DATE:
MODIFIED BY: E.E. WARD DATE: 6-12-03
CHECKED BY: C.B. Wood DATE: 6-12-04
FILE SPEC.: /usr/stds/02tddetail/metric/85701/857d01m.dgn

NORTH CAROLINA PROFESSIONAL ENGINEER SEAL 19761 CYNTHIA B. PERRY
3/21/05

PROJECT REFERENCE NO.	SHEET NO.
R-2552AA	7-AI

METRIC