12-JUL-2004 15:07
W:\Special Details\ericward\stds\02' Stds to Special Details\metric\86202\0862d02m.dgn
ericward AT DS212260

STATE OF NORTH CAROLINA
DEPT. OF TRANSPORTATION
DIVISION OF HIGHWAYS
RALEIGH, N.C.

METRIC DETAIL DRAWING FOR
GUARDRAIL INSTALLATION

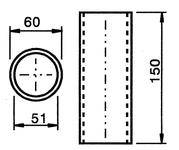

BREAKAWAY TERMINAL POST SLEEVE

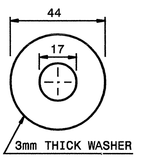

DETAIL OF STANDARD WASHER

STANDARD WASHER: TYPICAL USE UNDER NUT WITH WOOD POST

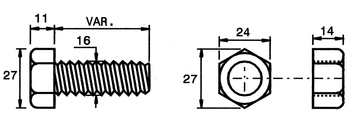

DETAIL OF STANDARD HEX BOLT AND NUT

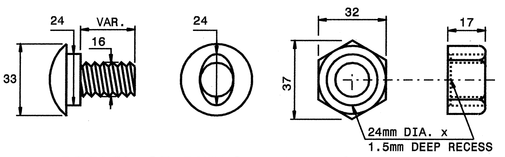

DETAIL OF BUTTON HEAD BOLT AND NUT

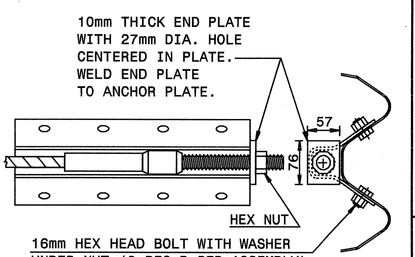

ANCHOR PLATE ASSEMBLY

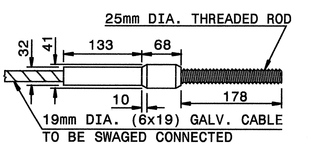

SWAGED CABLE

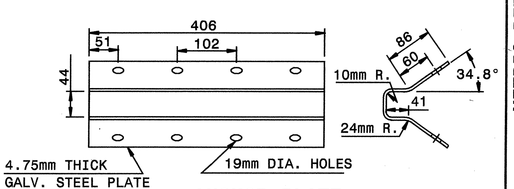

ANCHOR PLATE

CABLE ASSEMBLY

Note:
This drawing is dimensioned in millimeters unless otherwise depicted within the drawing.

SYSTEM PARTS

SHEET 5 OF 7
862D02

STATE OF NORTH CAROLINA
DEPT. OF TRANSPORTATION
DIVISION OF HIGHWAYS
RALEIGH, N.C.

METRIC DETAIL DRAWING FOR
GUARDRAIL INSTALLATION

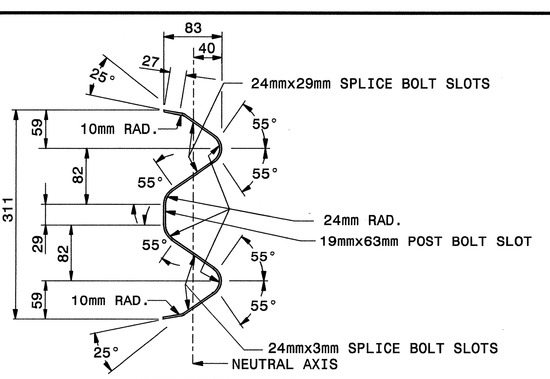

SECTION X-X

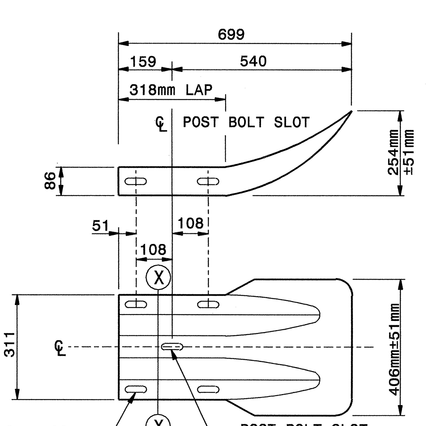

TERMINAL END SECTION

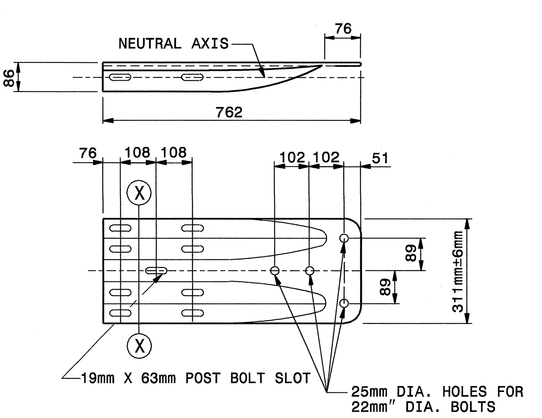

TYPICAL END SHOE

Note:
This drawing is dimensioned in millimeters unless otherwise depicted within the drawing.

SYSTEM PARTS - GENERAL USE

SHEET 6 OF 7
862D02

STATE OF NORTH CAROLINA
DEPT. OF TRANSPORTATION
DIVISION OF HIGHWAYS
RALEIGH, N.C.

METRIC DETAIL DRAWING FOR
GUARDRAIL INSTALLATION

DESIGN SERVICES UNIT
STANDARDS AND SPECIAL DESIGN
Office 919-250-4128 FAX 919-250-4119

SEE PLATE FOR TITLE

ORIGINAL BY: 2002 STD.862.02 DATE:
MODIFIED BY: E.E. WARD DATE: 02-09-03
CHECKED BY: [signature] DATE: 7/3/04
FILE SPEC.: /usr/stds/02todetail/metric/86202/862d02m.dgn

NORTH CAROLINA PROFESSIONAL ENGINEER SEAL 19761 CYNTHIA B. PERRY
3/2/15

PROJECT REFERENCE NO. R-2552AA
SHEET NO. 2-AM
METRIC