PROJECT REFERENCE NO.	SHEET NO.
B-3700	2
ROADWAY DESIGN ENGINEER	PAVEMENT DESIGN ENGINEER

NORTH CAROLINA PROFESSIONAL SEAL 16378 ENGINEER RAKHA V. PATEL 3-31-05

NORTH CAROLINA PROFESSIONAL SEAL 13868 ENGINEER SHIH-CHI CHEN 4/1/05

FINAL PAVEMENT DESIGN SCHEDULE

C1	PROP. APPROX. 2.50" ASPHALT CONCRETE SURFACE COURSE, TYPE SF9.5A, AT AN AVERAGE RATE OF 137.5 LBS. PER SQ. YD. IN EACH OF TWO LAYERS.
C2	PROP. VAR. DEPTH ASPHALT CONCRETE SURFACE COURSE, TYPE SF9.5A, AT AN AVERAGE RATE OF 110 LBS. PER SQ. YD. PER 1" DEPTH. TO BE PLACED IN LAYERS NOT TO EXCEED 1½" IN DEPTH.
D1	PROP. APPROX. 2.25" ASPHALT CONCRETE INTERMEDIATE COURSE, TYPE I19.0B, AT AN AVERAGE RATE OF 256.5 LBS. PER SQ. YD.
E1	PROP. APPROX. 4" ASPHALT CONCRETE BASE COURSE, TYPE B25.0B, AT AN AVERAGE RATE OF 456 LBS. PER SQ. YD.
R	SHOULDER BERM GUTTER.
T	EARTH MATERIAL.
U	EXISTING PAVEMENT.

NOTE: PAVEMENT EDGE SLOPES ARE 1:1 UNLESS SHOWN OTHERWISE.

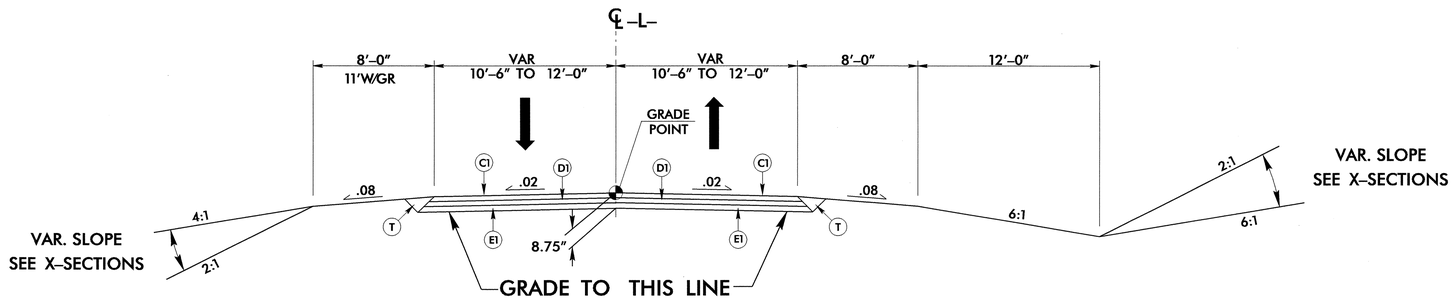

TYPICAL SECTION NO. 1

USE TYPICAL SECTION NO. 1

-L- STA. 13+05.00 TO -L- STA. 16+30.00 (BEGIN BRIDGE)
-L- STA. 17+40.00 (END BRIDGE) TO -L- STA. 21+65.00

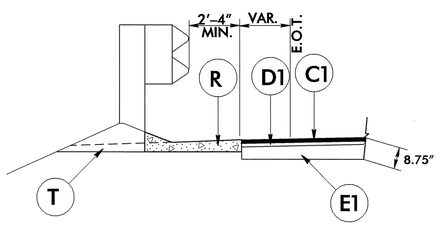

SHOULDER BERM GUTTER DETAIL

USE SHOULDER BERM GUTTER

-L- STA. 14+36.25 TO -L- STA. 16+19.33 (RT.)
-L- STA. 15+36.25 TO -L- STA. 16+19.33 (LT.)
-L- STA. 17+50.67 TO -L- STA. 19+15.00 (LT.)

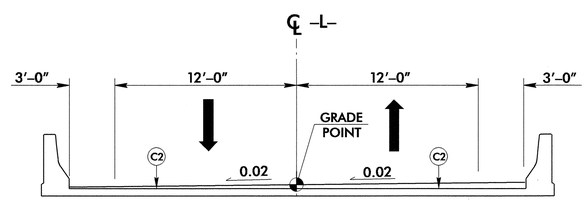

TYPICAL SECTION NO. 2

USE TYPICAL SECTION NO. 2

-L- STA. 16+30.00 TO -L- STA. 17+40.00

6/2/99

31-MAR-2005 (0:3)
R:\Roadway\Proj\B3700.typ
RPatel A1