PROJECT REFERENCE NO.	SHEET NO.
R-2539C	Sig.15

STATE OF NORTH CAROLINA
DEPT. OF TRANSPORTATION
DIVISION OF HIGHWAYS
RALEIGH, N.C.

9-03

ENGLISH STANDARD DRAWING FOR

METAL POLES

MISCELLANEOUS DETAILS

SHEET 3 OF 3

1740.01

MOUNTING POINT DETAIL

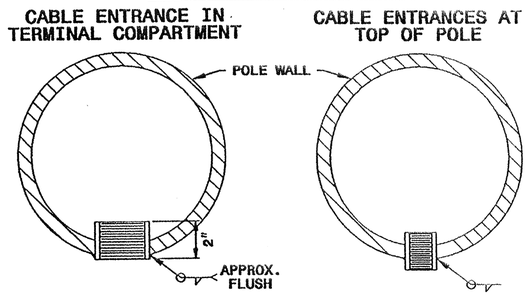

SEE GENERAL NOTE NO. 1 ON SHEET 2 OF THIS STANDARD DRAWING FOR FABRICATION DETAILS.

SEE GENERAL NOTE NO. 2 ON SHEET 2 OF THIS STANDARD DRAWING FOR FABRICATION DETAILS.

CABLE STRAIN RELIEF

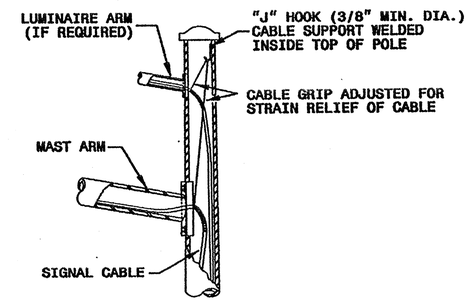

METAL POLE GROUNDING DETAIL

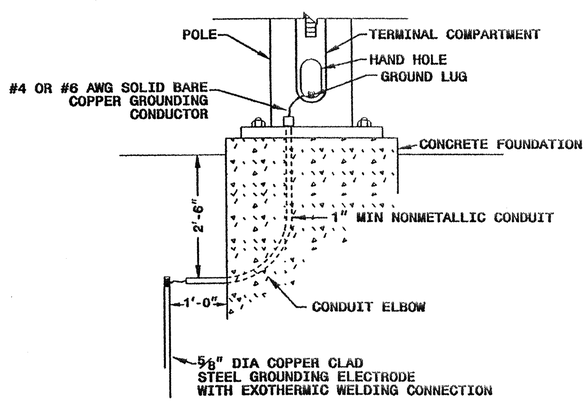

ATTACHMENT OF CABLE TO INTERMEDIATE METAL POLE

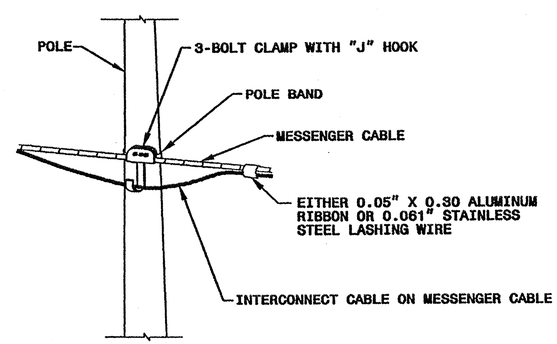

STATE OF NORTH CAROLINA
DEPT. OF TRANSPORTATION
DIVISION OF HIGHWAYS
RALEIGH, N.C.

9-03

ENGLISH STANDARD DRAWING FOR

METAL POLES

MISCELLANEOUS DETAILS

SHEET 3 OF 3

1740.01

Structural Engineer

NORTH CAROLINA PROFESSIONAL SEAL 028094 ENGINEER DEBESH C. SARKAR

D. Sarkar 9.19.2003
SIGNATURE DATE

Electrical Engineer

NORTH CAROLINA PROFESSIONAL SEAL 16286 ENGINEER MILTON L. DEAN

Milton L. Dean 9/22/03
SIGNATURE DATE

Standard Drawings

Traffic Management and Signal Systems Unit
122 N. McDowell St., Raleigh, NC 27603

See Plate for Title

Original: 2002 Standards

19-SEP-2003 14:27
s:\ite\sig\ite-sh11\Work\groups\803\bobby51\ardor\dwgs\sig11.dgn
sheet\ref\ref14001 second.dgn
bobbyardor