PROJECT REFERENCE NO.	SHEET NO.
B-3866	UC-3
DESIGNED BY: BCB	
DRAWN BY: BCB	
CHECKED BY: GYS	
APPROVED BY: GYS	
REVISED:	
NORTH CAROLINA DEPARTMENT OF TRANSPORTATION	
DESIGN SERVICES UNIT PHONE:(919)250-4128 FAX:(919)250-4119	UTILITY CONSTRUCTION PLANS ONLY

NORTH CAROLINA PROFESSIONAL SEAL 023948 ENGINEER GREG Y. STEVENS 12/14/04

UTILITY CONSTRUCTION

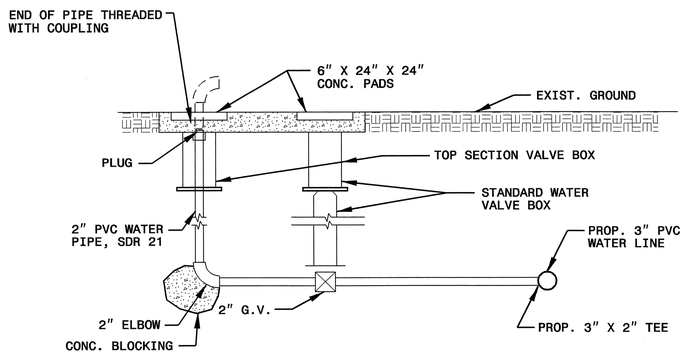

2" BLOW OFF ASSEMBLY

CLASS "C"

(BEDDING FOR P.V.C. PIPE)

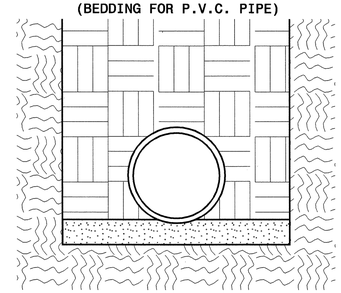

PIPE BEDDED IN LOOSE MATERIAL, LIGHTLY TAMPED WITH A MINIMUM OF 6" UNDER PIPE. TRENCH BACKFILLED IN LOOSE 6" LAYERS COMPACTED TO TOP OF TRENCH USING LOCAL EXCAVATED MATERIAL, IF APPROVED BY THE ENGINEER, OR SELECT MATERIAL. ALL MATERIAL SHALL BE FREE OF ROCKS, FOREIGN MATERIAL, AND FROZEN EARTH. COMPACTION SHALL BE TO APPROX. 95% DENSITY IN ACCORDANCE WITH AASHTO T-99 AS MODIFIED BY THE DEPARTMENT OF TRANSPORTATION.

MAXIMUM TRENCH WIDTH AT TOP OF PIPE

NOMINAL PIPE SIZE (INCHES)	TRENCH WIDTH (INCHES)	NOMINAL PIPE SIZE (INCHES)	TRENCH WIDTH (INCHES)
4	28	20	44
6	30	24	48
8	32	30	54
10	34	36	60
12	36	42	66
14	38	48	72
16	40	54	78
18	42		

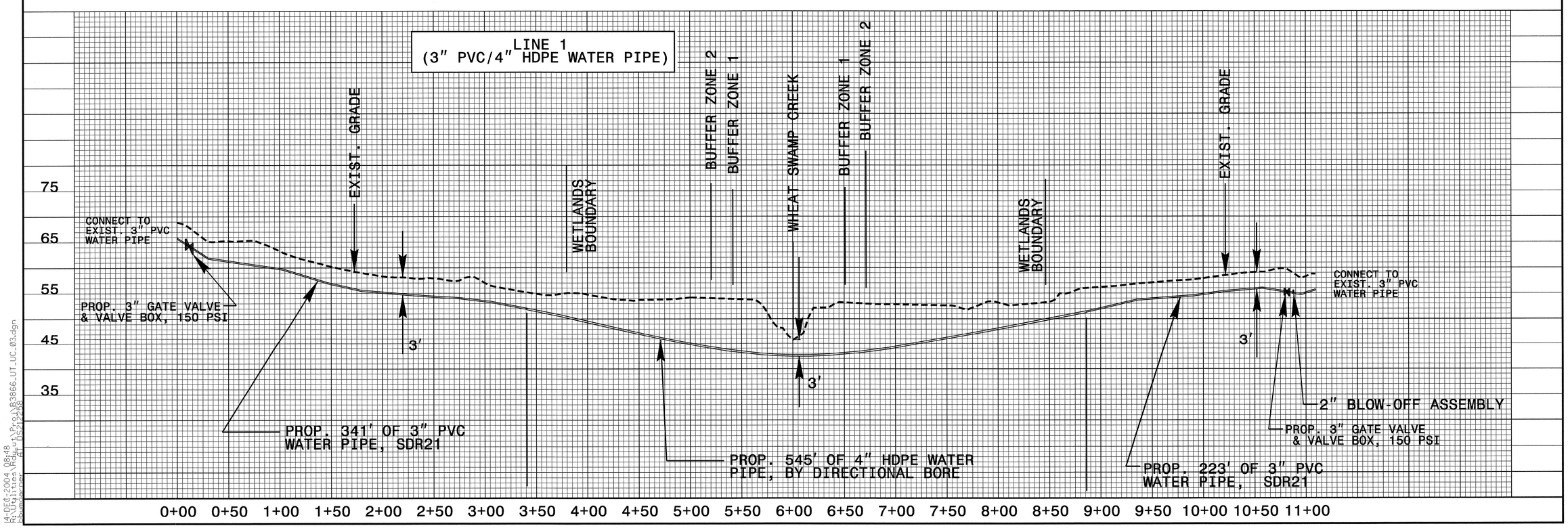

14-Dec-2004 08:48
R:\Utilities\Proj\B3866_UT_UC_03.dgn
Aug 9 2004 (Build 08.11.09.618)
DS212258