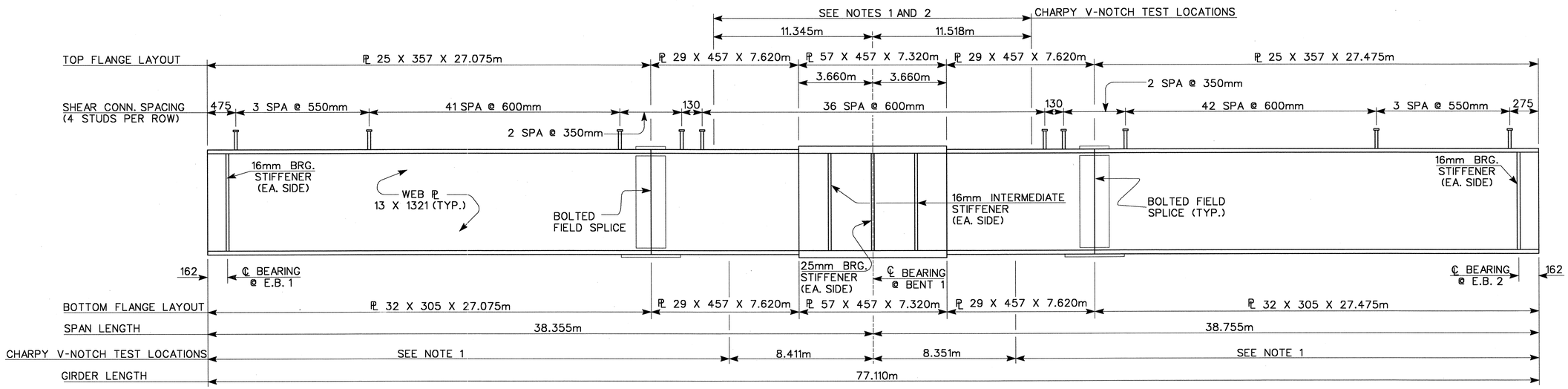

NOTE ① CHARPY V-NOTCH TESTS ARE REQUIRED FOR ALL TOP OR BOTTOM FLANGES WHICH FALL WITHIN THESE LIMITS, ALL WEB PLATES, AND ALL SPLICE PLATES. IF A PERMITTED SHOP FLANGE SPLICE IS NOT USED, CHARPY V-NOTCH TESTS WILL BE REQUIRED FOR THE ENTIRE FLANGE PLATE.

GIRDER ELEVATION

(DIAPHRAGM AND CONNECTOR PL'S NOT SHOWN)

NOTE ② NO WELDING OF FORMS OR FALSEWORK TO THE TOP FLANGE WILL BE PERMITTED IN THIS REGION.

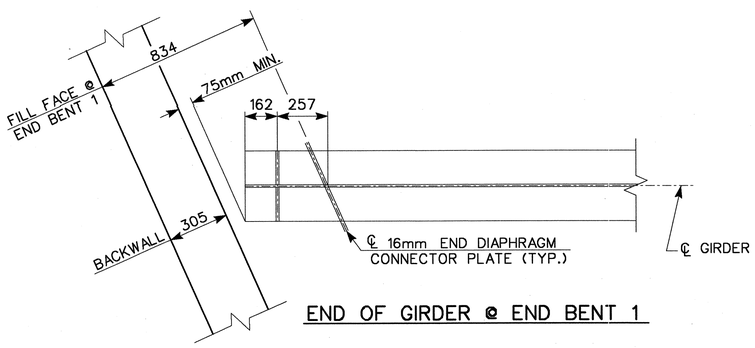

END OF GIRDER @ END BENT 1

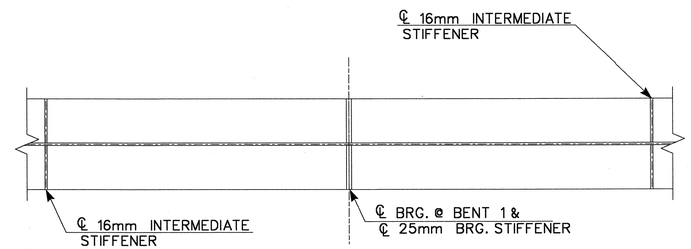

@ BENT 1

BOTTOM FLANGE DETAILS

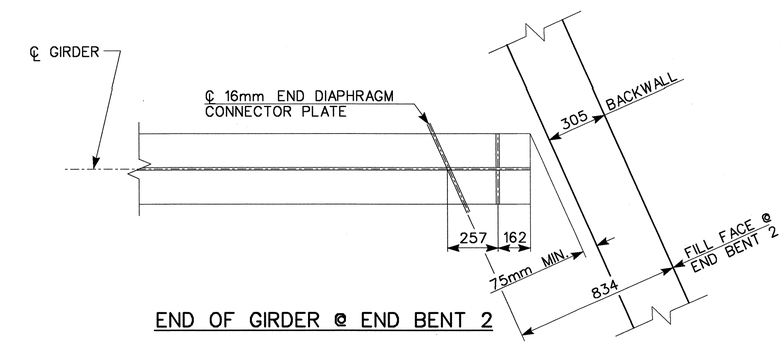

END OF GIRDER @ END BENT 2

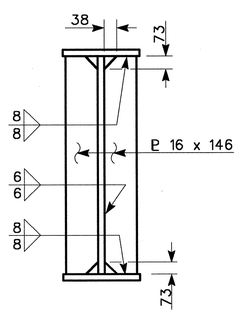

CONNECTOR PLATE

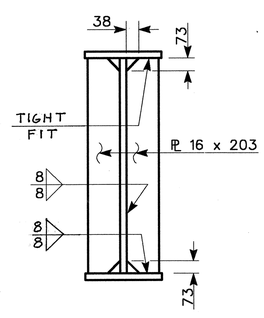

INTERMEDIATE STIFFENER

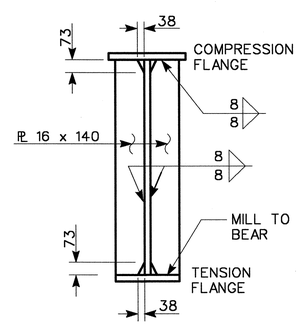

END BENTS 1 & 2

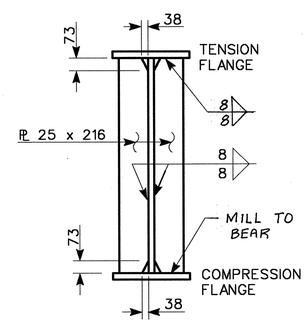

BENT 1

BEARING STIFFENER

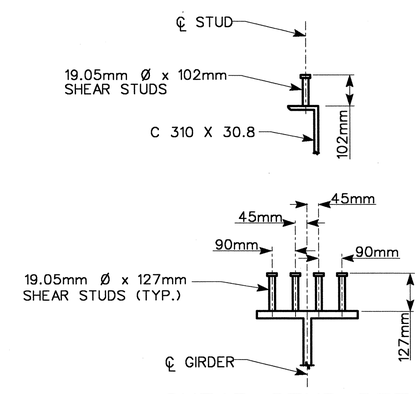

SHEAR STUD DETAILS

NORTH CAROLINA PROFESSIONAL SEAL ENGINEER ADAM J. REEDER

1-13-04

PROJECT NO. R-2552B

JOHNSTON COUNTY

STATION: 65+51.880 -L-
14+25.318 -Y7-

SHEET 1 of 3

STATE OF NORTH CAROLINA
DEPARTMENT OF TRANSPORTATION
RALEIGH

SUPERSTRUCTURE
STRUCTURAL STEEL
DETAILS

REVISIONS							SHEET NO.
NO.	BY:	DATE:	NO.	BY:	DATE:		S-9
1			3				TOTAL SHEETS
2			4				431

PBSJ
1616 E. MILLBROOK RD., SUITE 310
RALEIGH, NORTH CAROLINA 27609
PHONE (919) 876-6888
FAX (919) 876-6848

DRAWN BY : AR DATE : 08/03
CHECKED BY : JL DATE : 08/03