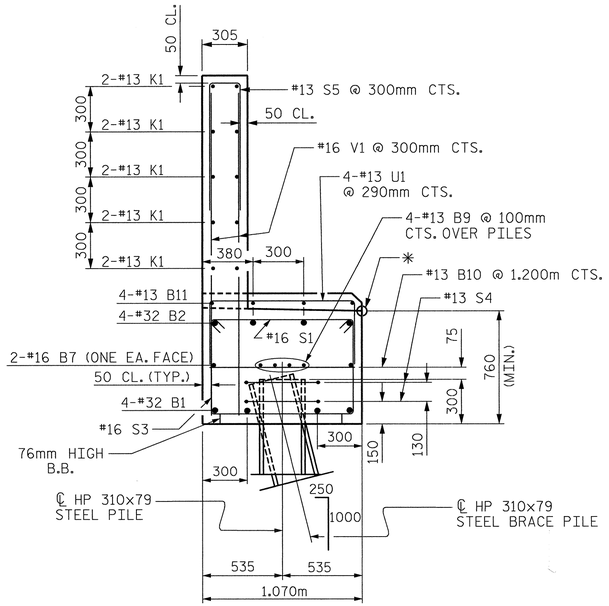

SECTION A-A

✳ ELEVATIONS BETWEEN BRIDGE SEAT BUILD-UPS ARE TAKEN AT THIS POINT.

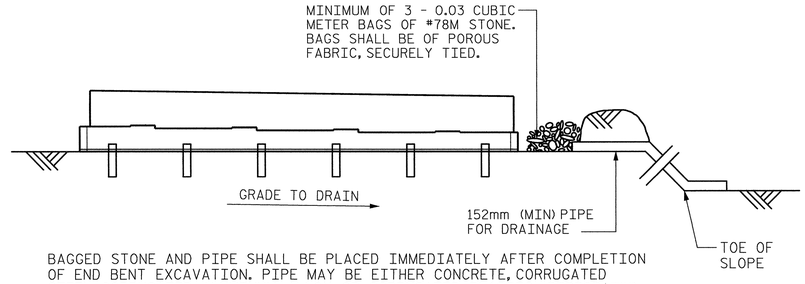

BAGGED STONE AND PIPE SHALL BE PLACED IMMEDIATELY AFTER COMPLETION OF END BENT EXCAVATION. PIPE MAY BE EITHER CONCRETE, CORRUGATED STEEL, CORRUGATED ALUMINUM ALLOY, OR CORRUGATED PLASTIC. PERFORATED PIPE WILL NOT BE ALLOWED.

BAGGED STONE SHALL REMAIN IN PLACE UNTIL THE ENGINEER DIRECTS THAT IT BE REMOVED. THE CONTRACTOR SHALL REMOVE AND DISPOSE OF SILT ACCUMULATIONS AT BAGGED STONE WHEN SO DIRECTED BY THE ENGINEER. BAGS SHALL BE REMOVED AND REPLACED WHENEVER THE ENGINEER DETERMINES THAT THEY HAVE DETERIORATED AND LOST THEIR EFFECTIVENESS.

NO SEPARATE PAYMENT WILL BE MADE FOR THIS WORK AND THE ENTIRE COST OF THIS WORK SHALL BE INCLUDED IN THE UNIT CONTRACT PRICE FOR THE SEVERAL PAY ITEMS.

TEMPORARY DRAINAGE AT END BENT

BAR TYPES

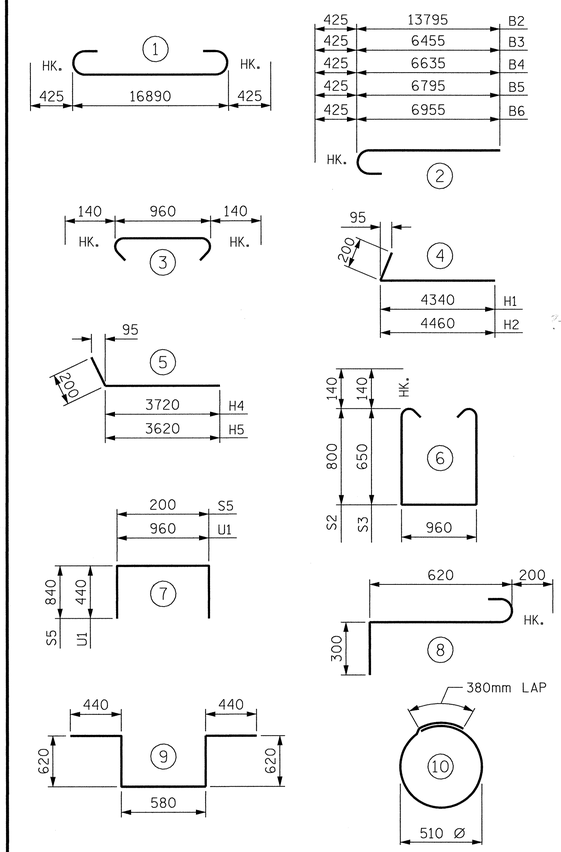

ALL BARS DIMENSIONS ARE OUT TO OUT.

BILL OF MATERIAL

END BENT #1

BAR	NUMBER	SIZE	TYPE	LENGTH	WEIGHT
B1	4	32	1	17740	454
B2	4	32	2	14220	364
B3	1	32	2	6880	44
B4	1	32	2	7060	45
B5	1	32	2	7220	46
B6	1	32	2	7380	47
B7	2	16	STR.	16880	52
B8	2	16	STR.	3840	12
B9	8	13	STR.	8820	70
B10	14	13	STR.	960	13
B11	8	13	STR.	900	7
H1	11	16	4	4540	78
H2	11	16	4	4660	80
H3	8	16	STR.	1020	13
H4	10	16	5	3920	61
H5	10	16	5	3820	59
K1	20	13	STR.	8820	175
S1	61	16	3	1240	117
S2	26	16	6	2840	115
S3	35	16	6	2540	138
S4	12	13	10	1980	24
S5	50	13	7	1880	93
S6	2	19	9	2700	12
S7	6	19	8	1120	15
U1	8	13	7	1840	15
V1	100	16	STR.	2060	320
V2	38	16	STR.	2720	160
V3	34	16	STR.	2460	130

REINFORCING STEEL	KG.	2759
CLASS A CONCRETE		
POUR #1 CAP & LOWER PORTION OF WING	CU. METERS	18.4
POUR #2 BACKWALL & UPPER PORTION OF WING	CU. METERS	11.8
CLASS A CONCRETE	CU. METERS	30.2
HP 310x79 STEEL PILES NO. 8	METERS	136.0

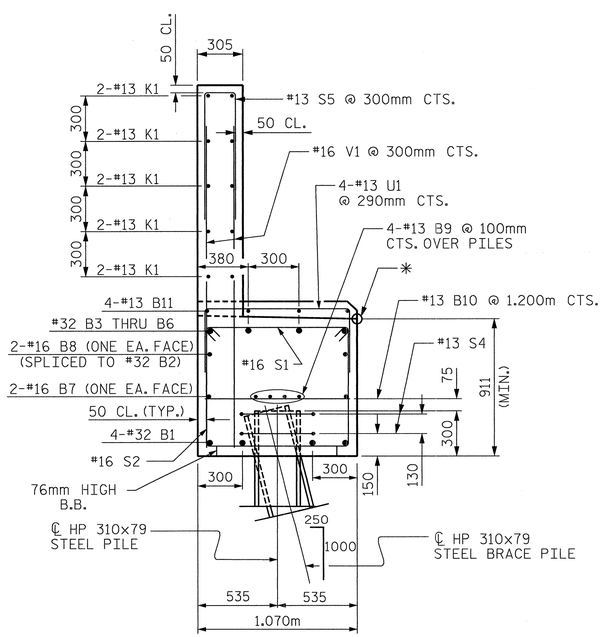

SECTION B-B

✳ ELEVATIONS BETWEEN BRIDGE SEAT BUILD-UPS ARE TAKEN AT THIS POINT.

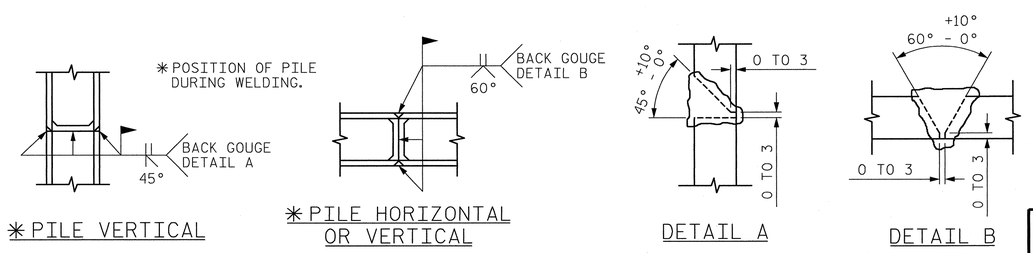

✳ PILE VERTICAL

✳ PILE HORIZONTAL OR VERTICAL

DETAIL A

DETAIL B

PILE SPLICE DETAILS

PROJECT NO. R-2552B

JOHNSTON COUNTY

STATION: 97+59.319-L-LT POC

SHEET 3 OF 3

STATE OF NORTH CAROLINA
DEPARTMENT OF TRANSPORTATION
RALEIGH

SUBSTRUCTURE

END BENT 1

NORTH CAROLINA PROFESSIONAL SEAL 023324 ENGINEER JAMES D. FITZ MORRIS
5-6-02

CTE ENGINEERS
CONSOER TOWNSEND ENVIRODYNE ENGINEERS, INC.
13325 SOUTH POINT BOULEVARD, SUITE 400
CHARLOTTE, NORTH CAROLINA 28273-5820
(704) 583-0902

REVISIONS							
NO.	BY:	DATE:	NO.	BY:	DATE:	SHEET NO.	
1			3			S-100	
2			4			TOTAL SHEETS	
						431	

DRAWN BY : MSB DATE : 05/01/02
CHECKED BY : JDF DATE : 05/01/02