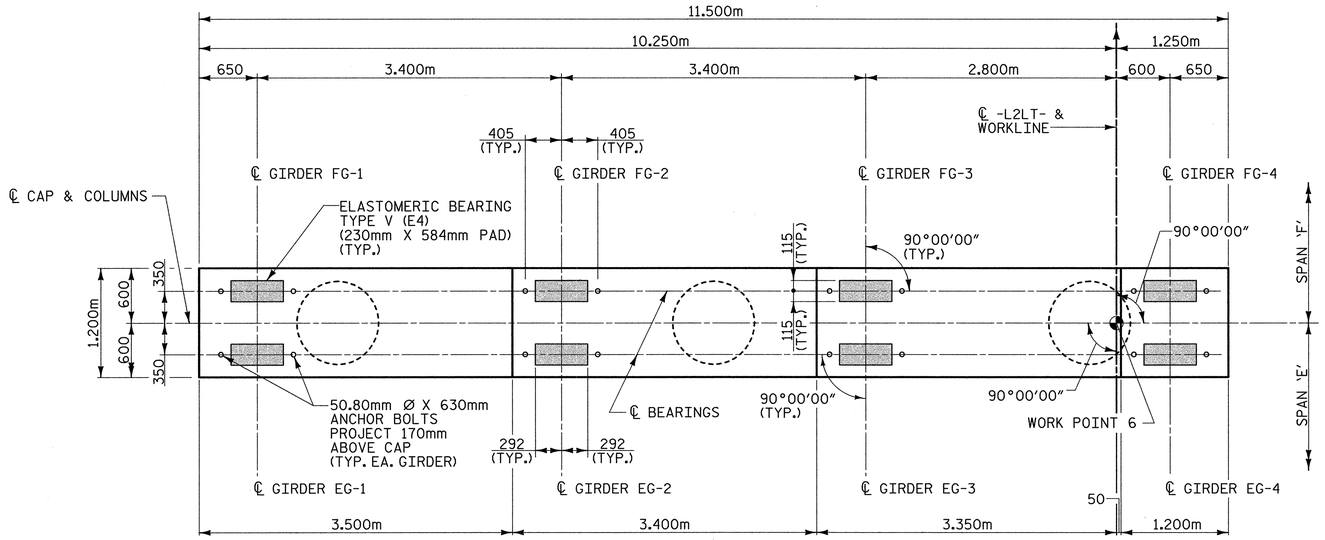

PLAN OF CAP

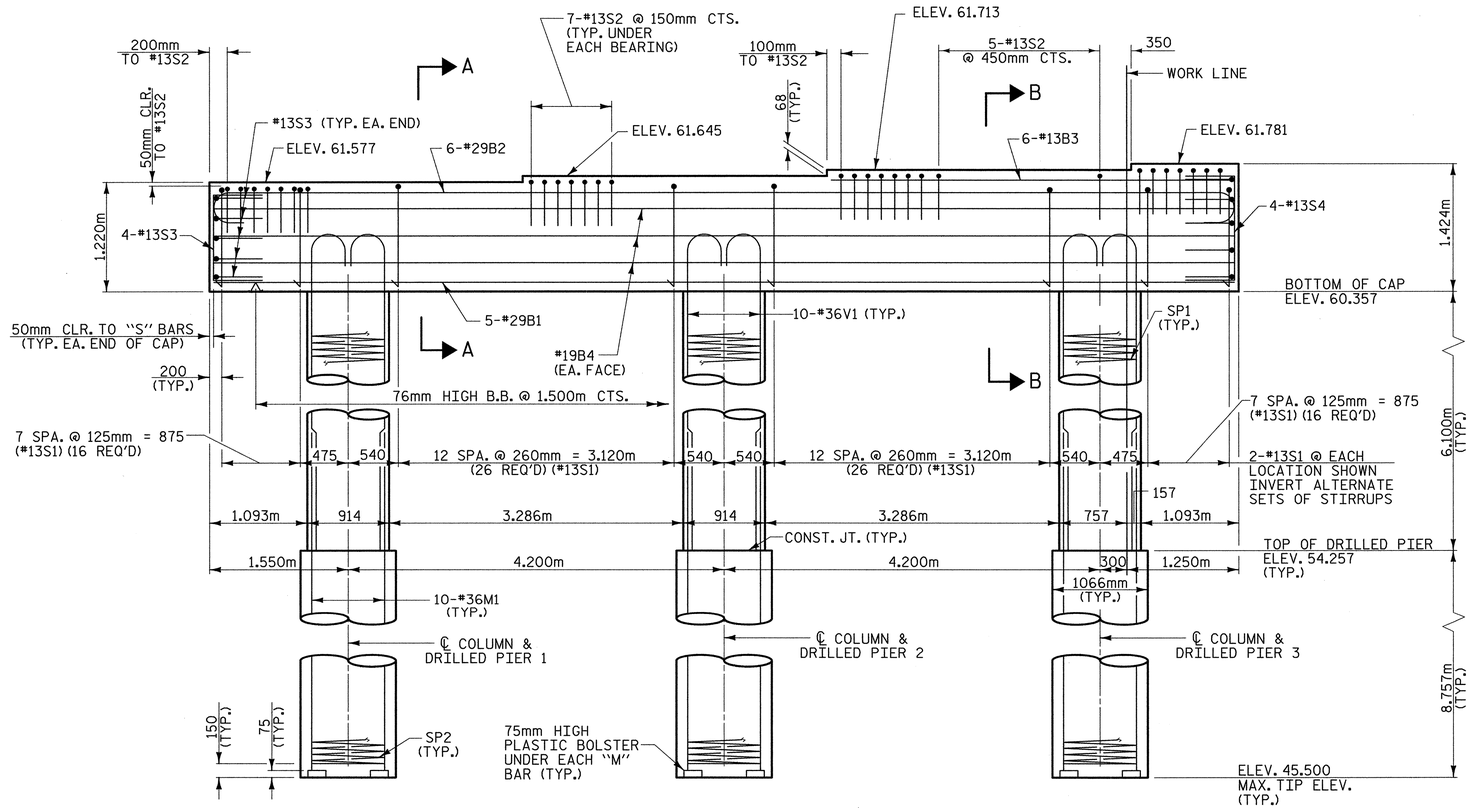

ELEVATION

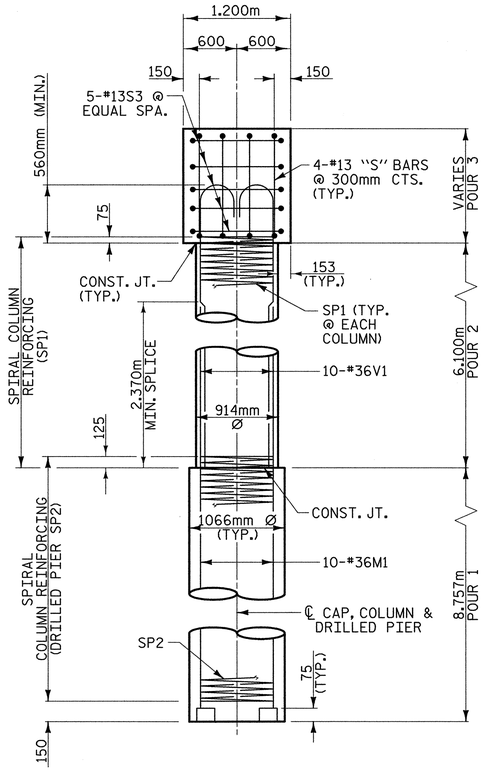

END ELEVATION

METRIC

PROJECT NO. R-2552C

JOHNSTON COUNTY

STATION: 109+56.000 -L2LT- POT

SHEET 1 OF 2

STATE OF NORTH CAROLINA
DEPARTMENT OF TRANSPORTATION
RALEIGH

SUBSTRUCTURE
BENT 5
(LEFT LANE)

NORTH CAROLINA PROFESSIONAL SEAL 14014 ENGINEER ROBERT C. LARSON 2/25/05

PLANS PREPARED BY:
MULKEY ENGINEERS & CONSULTANTS
PO Box 33127 Raleigh, N.C. 27636 (919) 851-1912 (919) 851-1918 (FAX) WWW.MULKEYINC.COM

REFERENCE NO. BL-32

REVISIONS						SHEET NO.
NO.	BY:	DATE:	NO.	BY:	DATE:	S-215
1			3			TOTAL SHEETS
2			4			431

DRAWN BY : J. P. SHERMAN DATE : 12/04
CHECKED BY : R. C. LARSON DATE : 12/04

02/21/2005 07:22:41AM r:\Structures\Site 1\Left Lane\R2552C_SD_B5_01.dgn