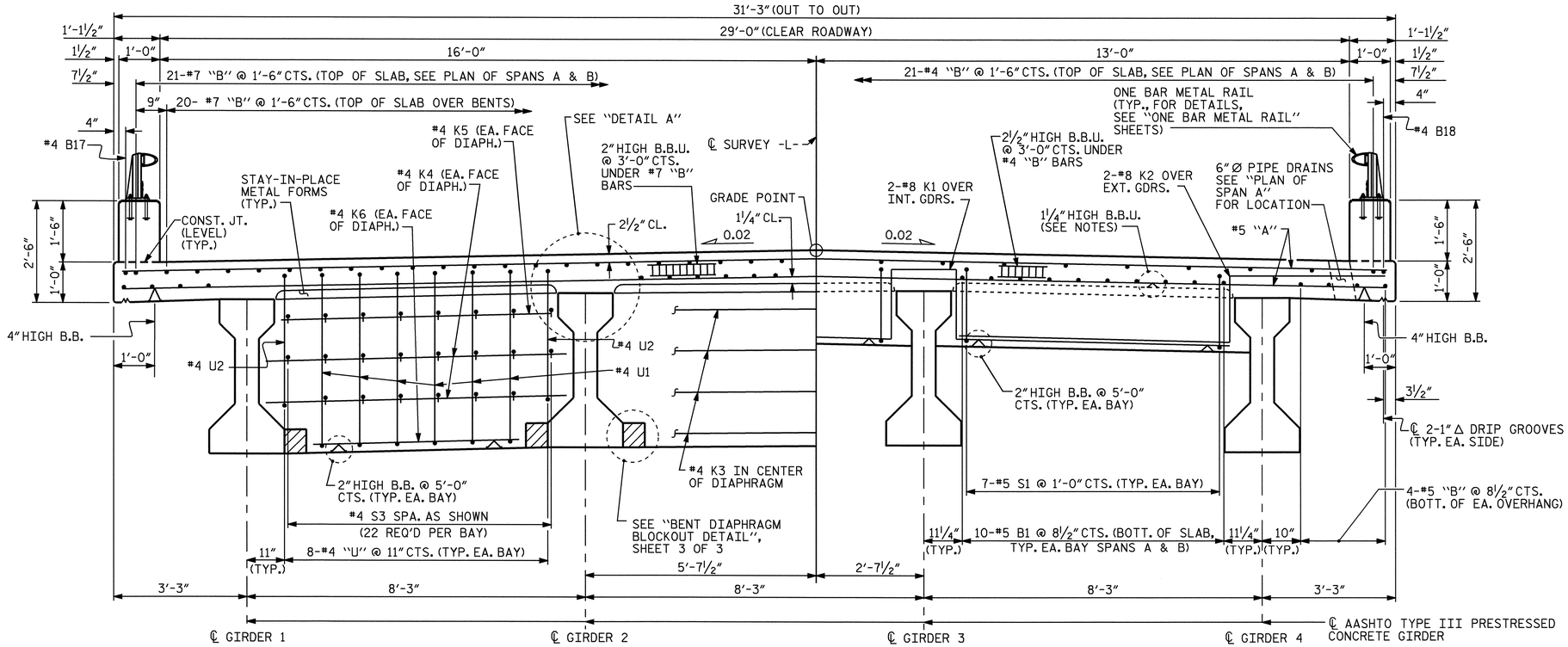

HALF TYPICAL SECTION AT BENTS
(SHOWING CONTINUOUS FOR LIVE LOAD DIAPHRAGMS)

HALF TYPICAL SECTION AT END BENT No.1
(SHOWING END BENT No. 1 DIAPHRAGMS)

TYPICAL SECTION

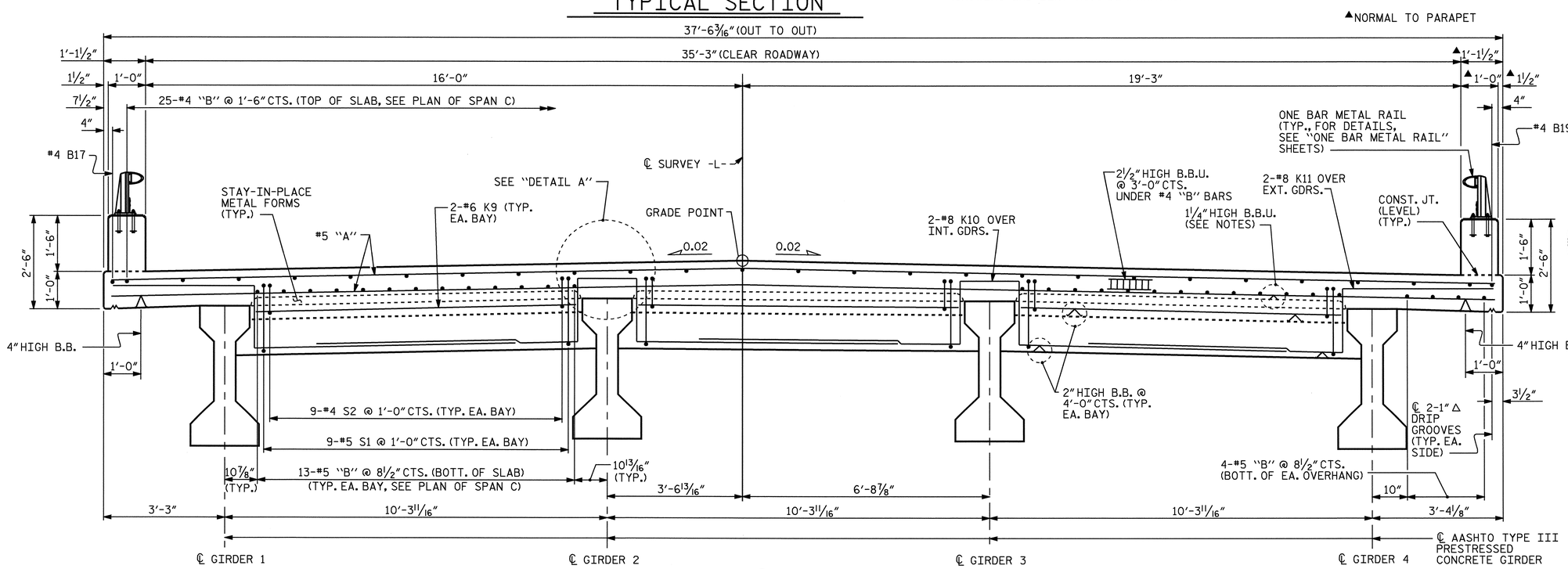

TYPICAL SECTION AT ℄ JOINT AT END BENT No. 2

(SHOWING END BENT No. 2 DIAPHRAGMS)

NOTES :

PROVIDE 1¼" HIGH BEAM BOLSTERS UPPER AT 4'-0" CTS. ATOP THE METAL STAY-IN-PLACE FORMS TO SUPPORT THE BOTTOM MAT OF 'A' BARS. WHEN USING REMOVABLE FORMS, PROVIDE CONTINUOUS HIGH CHAIRS FOR METAL DECK (C.H.C.M.) @ 4'-0" CTS. WITH A HEIGHT TO SUPPORT THE BOTTOM MAT OF 'A' BARS A CLEAR DISTANCE OF 2½" ABOVE THE TOP OF THE REMOVABLE FORM.

LONGITUDINAL STEEL MAY BE SHIFTED SLIGHTLY, AS NECESSARY, TO AVOID INTERFERENCE WITH STIRRUPS IN PRESTRESSED CONCRETE GIRDERS.

PREVIOUSLY CAST CONCRETE IN A CONTINUOUS UNIT SHALL HAVE ATTAINED A MINIMUM COMPRESSIVE STRENGTH OF 3,000 PSI BEFORE ADDITIONAL CONCRETE IS CAST IN THE UNIT.

PARAPET IN A CONTINUOUS UNIT SHALL NOT BE CAST UNTIL ALL SLAB CONCRETE IN THE UNIT HAS BEEN CAST AND HAS REACHED A MINIMUM COMPRESSIVE STRENGTH OF 3,000 PSI.

CONCRETE IN INTERMEDIATE DIAPHRAGMS MAY BE CLASS A IN LIEU OF CLASS AA. PAYMENT SHALL BE MADE UNDER THE UNIT CONTRACT PRICE FOR REINFORCED CONCRETE DECK SLAB.

TEMPORARY STRUTS SHALL BE PLACED BETWEEN PRESTRESSED GIRDERS ADJACENT TO THE DIAPHRAGMS AND THE NUTS ON THE 1¼" DIA. TIE RODS SHALL BE FULLY TIGHTENED BEFORE THE DIAPHRAGMS ARE CAST. STRUTS SHALL REMAIN IN PLACE 3 DAYS AFTER CONCRETE IS PLACED. THE TIE RODS SHALL BE RE-TIGHTENED AFTER THE STRUTS HAVE BEEN REMOVED.

REMOVABLE FORMS MAY BE USED IN LIEU OF METAL STAY-IN-PLACE FORMS IN ACCORDANCE WITH ARTICLE 420-3 OF THE STANDARD SPECIFICATIONS.

ALL REINFORCEMENT IN PARAPETS SHALL BE EPOXY COATED.

THE NORMAL UNCOMPRESSED SEAL WIDTH OF THE EVAZOTE JOINT SEAL SHALL BE 2½" AT END BENT No.1 AND No. 2. FOR EVAZOTE JOINT SEALS, SEE SPECIAL PROVISIONS.

THE JOINT IN THE DECK SHALL BE SAWED PRIOR TO THE CASTING OF THE PARAPET.

FOR PARAPET REINFORCING STEEL AND DETAILS, SEE "CONCRETE PARAPET DETAILS" SHEET.

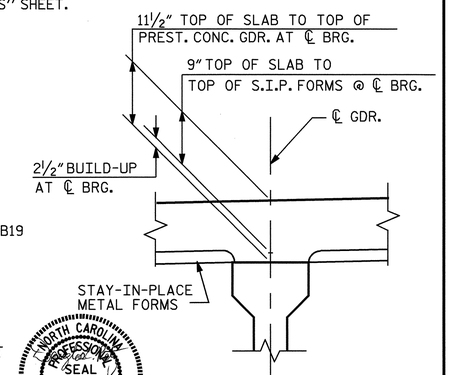

DETAIL A

NORTH CAROLINA PROFESSIONAL SEAL 11310 ENGINEER DOUGLAS E. PETREE 02/24/05

PROJECT NO. B-3922

WATAUGA COUNTY

STATION: 11+06.50 -L-

SHEET 1 OF 3

STATE OF NORTH CAROLINA
DEPARTMENT OF TRANSPORTATION
RALEIGH

SUPERSTRUCTURE
TYPICAL SECTIONS

REVISIONS						SHEET NO.
NO.	BY:	DATE:	NO.	BY:	DATE:	S-4
1			3			TOTAL SHEETS
2			4			41

DRAWN BY : A.R.CHESSON DATE : 6-04
CHECKED BY : B.N.GRADY DATE : 9-04

24-FEB-2005 10:26
W:\squadw\b3922\achesson\microstation\b3922_sd_ts_01.dgn
achesson