PROJECT REFERENCE NO.	SHEET NO.
WBS No. 38224	2 D
ROADWAY DESIGN ENGINEER	PAVEMENT DESIGN ENGINEER

PAVEMENT SCHEDULE

C1	1 ½" S9.5B
C2	VAR. DEPTH S9.5B
D1	3" S119.0B
D2	VAR. DEPTH S119.0B
E1	5-1/2" B25.0B
E2	VAR. DEPTH B25.0B
R	5" CONCRETE MONOLITHIC ISLAND
R1	2' 6" CURB & GUTTER
T	EARTH MATERIAL
U	EXISTING PAVEMENT
W	WEDGING

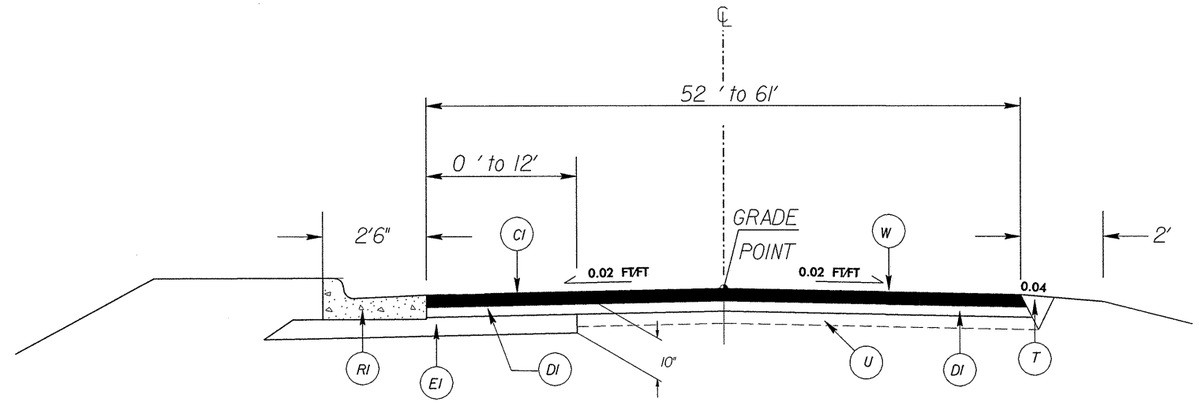

TYPICAL SECTION NO. 7

USE TYPICAL SECTION NO. 7 AT THE FOLLOWING LOCATIONS:
STA. 166+73 TO STA. 169+28.13

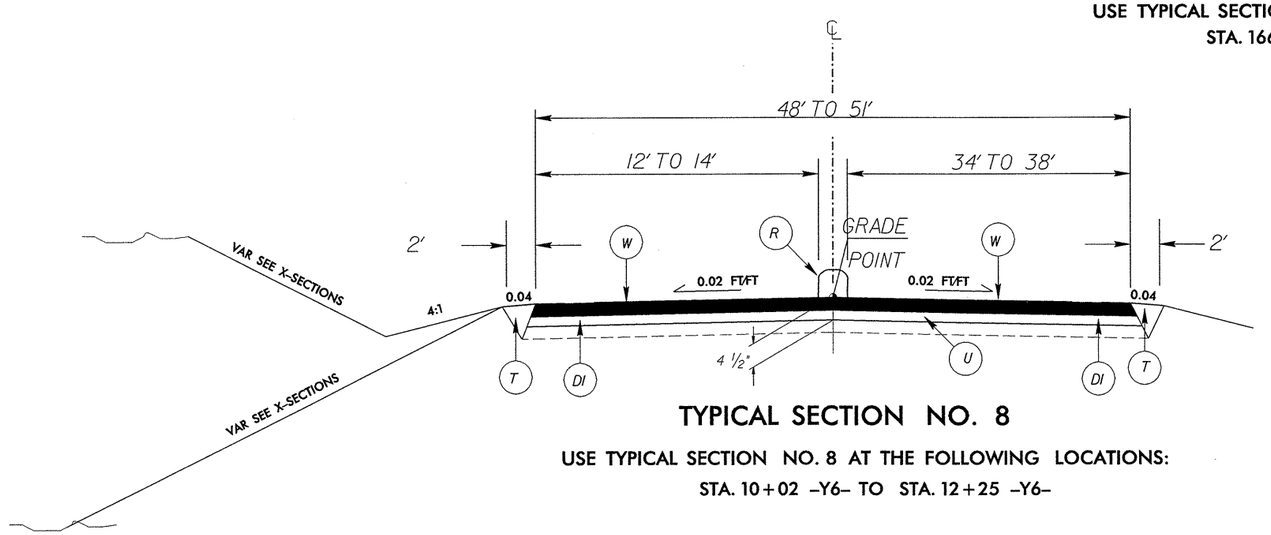

TYPICAL SECTION NO. 8

USE TYPICAL SECTION NO. 8 AT THE FOLLOWING LOCATIONS:
STA. 10+02 -Y6- TO STA. 12+25 -Y6-

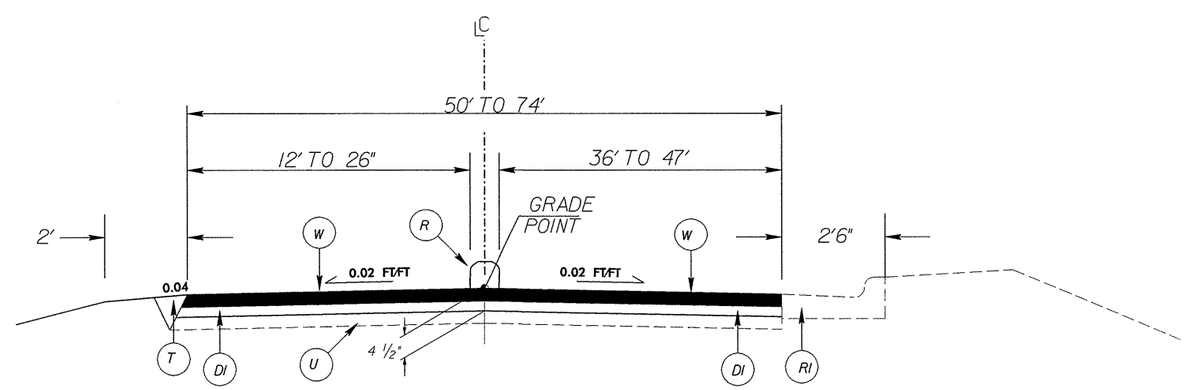

TYPICAL SECTION NO. 9

USE TYPICAL SECTION NO. 9 AT THE FOLLOWING LOCATIONS:
STA. 12+25 -Y6- TO STA 14+82.78 -Y6-

$$$$$$SYSTIME$$$$
$$$$$$USER$$$$
$$$$$$DGNS$$$$$$$$$$$$$$$$$$$$
$$$$$$DGNFNAME$$$$