PROJECT REFERENCE NO.	SHEET NO.
B-3906	2-F

PROJECT REFERENCE NO.	SHEET NO.

5/14/99

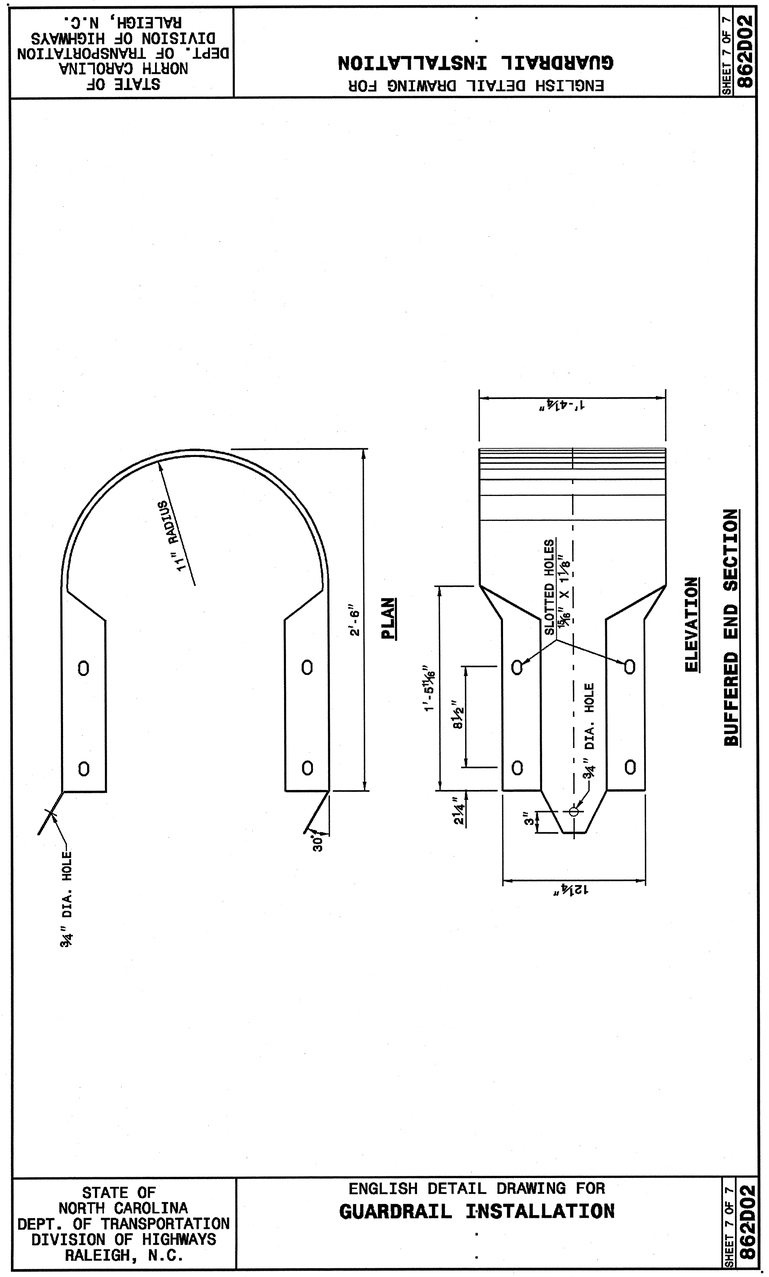

STATE OF NORTH CAROLINA DEPT. OF TRANSPORTATION DIVISION OF HIGHWAYS RALEIGH, N.C.	ENGLISH DETAIL DRAWING FOR GUARDRAIL INSTALLATION	SHEET 7 OF 7 862D02

14-MAY-2003 14:32
W:\Special Details\ericward\stds\02' Stds to Special Details\english\86202\0862d02.dgn
ericward AT DS188660

NORTH CAROLINA PROFESSIONAL SEAL 022966 ENGINEER JOEL S. HOWERTON
12/16/04

DESIGN SERVICES UNIT
STANDARDS AND SPECIAL DESIGN
Office 919-250-4128 FAX 919-250-4119

SEE PLATE FOR TITLE

ORIGINAL BY: 2002 STD.862.02 DATE:
MODIFIED BY: E.E. WARD DATE: 02-09-03
CHECKED BY: DATE:
FILE SPEC.: /usr/stds/02todetail/english/86202/862d02.dgn