TGS ENGINEERS
SUITE 141
975 WALNUT STREET
CARY, NC 27511
PH (919) 319-8850

PROJECT REFERENCE NO.	SHEET NO.
B-3694	2
R/W SHEET NO.	

ROADWAY DESIGN ENGINEER	~~HYDRAULICS~~ PAVEMENT ENGINEER
NORTH CAROLINA PROFESSIONAL SEAL 15474 ENGINEER W. CRAIG PARKER 1-7-2005	NORTH CAROLINA PROFESSIONAL SEAL 22896 ENGINEER CLARK S. MORRISON 1/12/05

PAVEMENT SCHEDULE

C1	PROP. APPROX. 3" ASPHALT CONCRETE SURFACE COURSE, TYPE SF9.5A, AT AN AVERAGE RATE OF 165 LBS. PER SQ. YD.IN EACH OF TWO LAYERS.
C2	PROP. VAR. DEPTH ASPHALT CONCRETE SURFACE COURSE, TYPE SF9.5A, AT AN AVERAGE RATE OF 110 LBS. PER SQ. YD. PER 1" DEPTH, TO BE PLACED IN LAYERS NOT LESS THAN 1¼" IN DEPTH OR GREATER THAN 1½" IN DEPTH.
D1	PROP. APPROX. 4" ASPHALT CONCRETE INTER. COURSE. TYPE I19.0B, AT AN AVERAGE RATE OF 456 LBS. PER SQ. YD.
D2	PROP. VAR. DEPTH ASPHALT CONCRETE INTER. COURSE. TYPE I19.0B, AT AN AVERAGE RATE OF 114 LBS. PER SQ. YD. PER 1" DEPTH, TO BE PLACED IN LAYERS NOT LESS THAN 2¼" IN DEPTH OR GREATER THAN 4" IN DEPTH.
E1	PROP. APPROX. 3" ASPHALT CONCRETE BASE COURSE, TYPE B25.0B, AT AN AVERAGE RATE OF 342 LBS. PER SQ. YD.
E2	PROP. VAR. DEPTH ASPHALT CONCRETE BASE COURSE, TYPE B25.0B, AT AN AVERAGE RATE OF 114 LBS. PER SQ. YD. PER 1" DEPTH. TO BE PLACED IN LAYERS NOT LESS THAN 3" IN DEPTH OR GREATER THAN 5½" IN DEPTH
R1	CONCRETE EXPRESSWAY GUTTER.
R2	SHOULDER BERM GUTTER.
T	EARTH MATERIAL.
U	EXISTING PAVEMENT.
W	WEDGING EXISTING PAVEMENT (SEE DETAIL ON THIS SHEET).

NOTE: PAVEMENT EDGE SLOPES ARE 1:1 UNLESS SHOWN OTHERWISE.

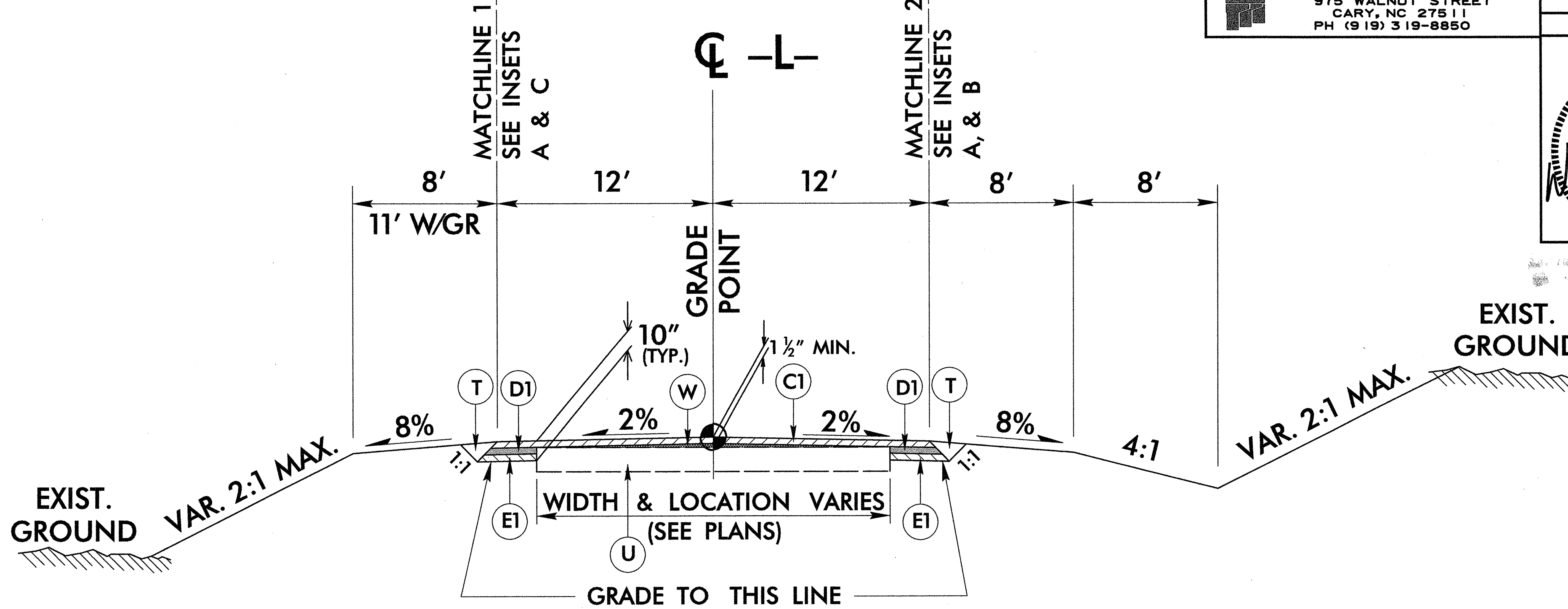

TYPICAL SECTION NO. 1

USE TYPICAL SECTION NO. 1 AS FOLLOWS:

-L- Sta. 12+00.00 TO -L- Sta. 16+45+/- (BEGIN BRIDGE)
-L- Sta. 18+10+/- (END BRIDGE) TO -L- Sta. 28+00.00

NOTE: ALL NEW PAVEMENT - NO WIDENING
-L- Sta. 14+75+/- TO -L- Sta. 22+25+/-

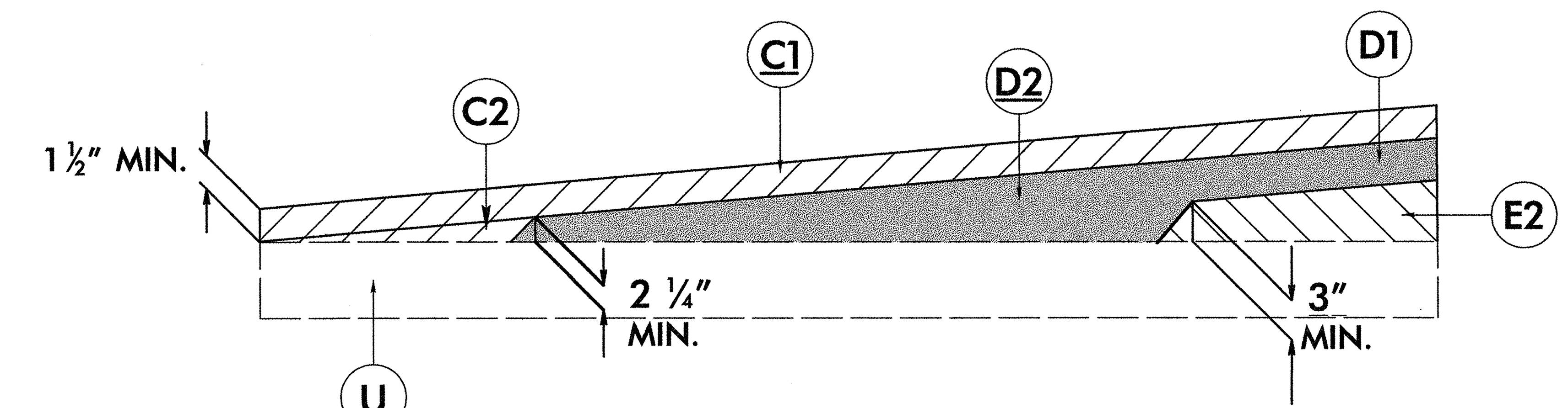

W: Wedging Detail

INSET A

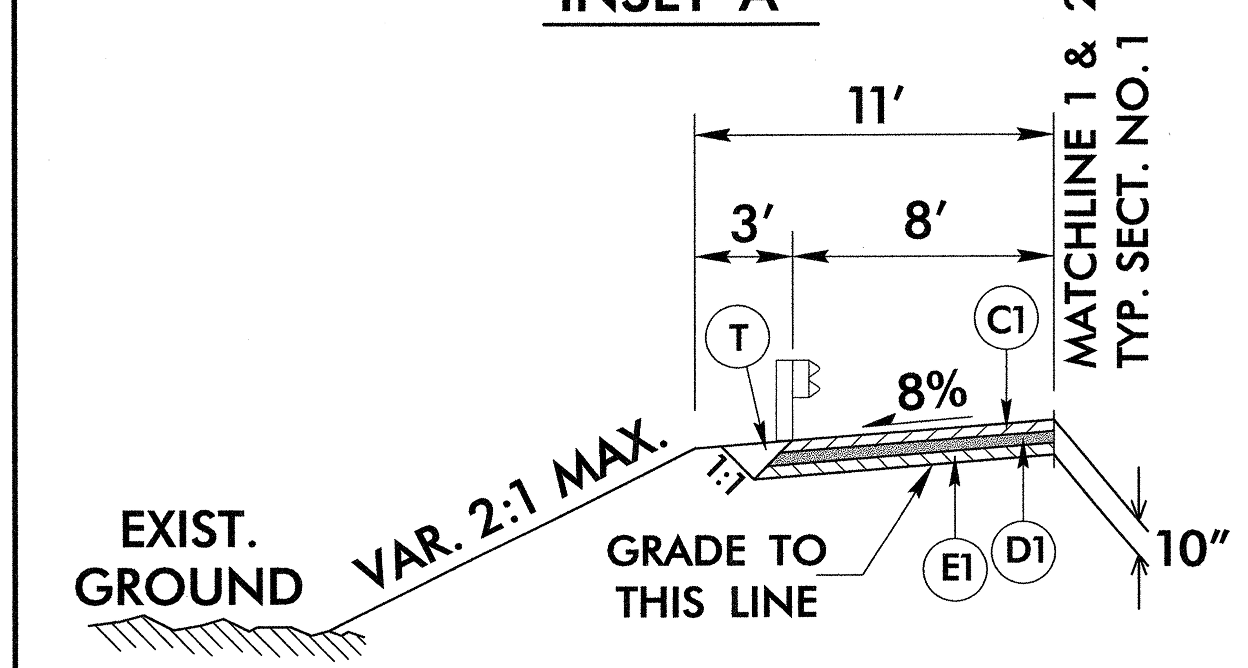

USE INSET A FOR ALL AREAS ADJACENT TO PROPOSED GUARDRAIL (SEE PLANS)

INSET B

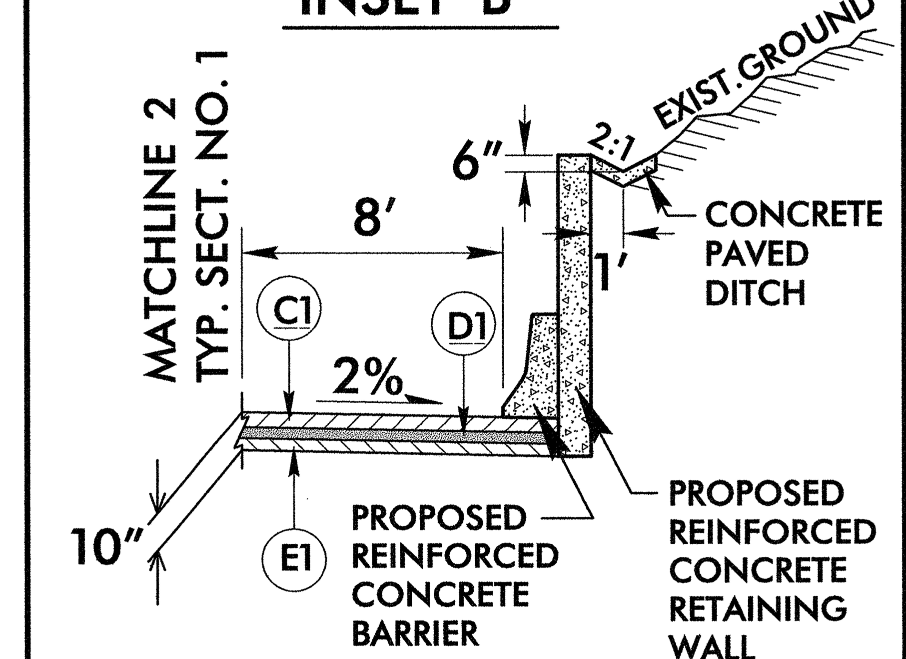

USE INSET B AS FOLLOWS:
-L- Sta. 12+30.00 RT TO -L- Sta. 14+32.00 RT

INSET C

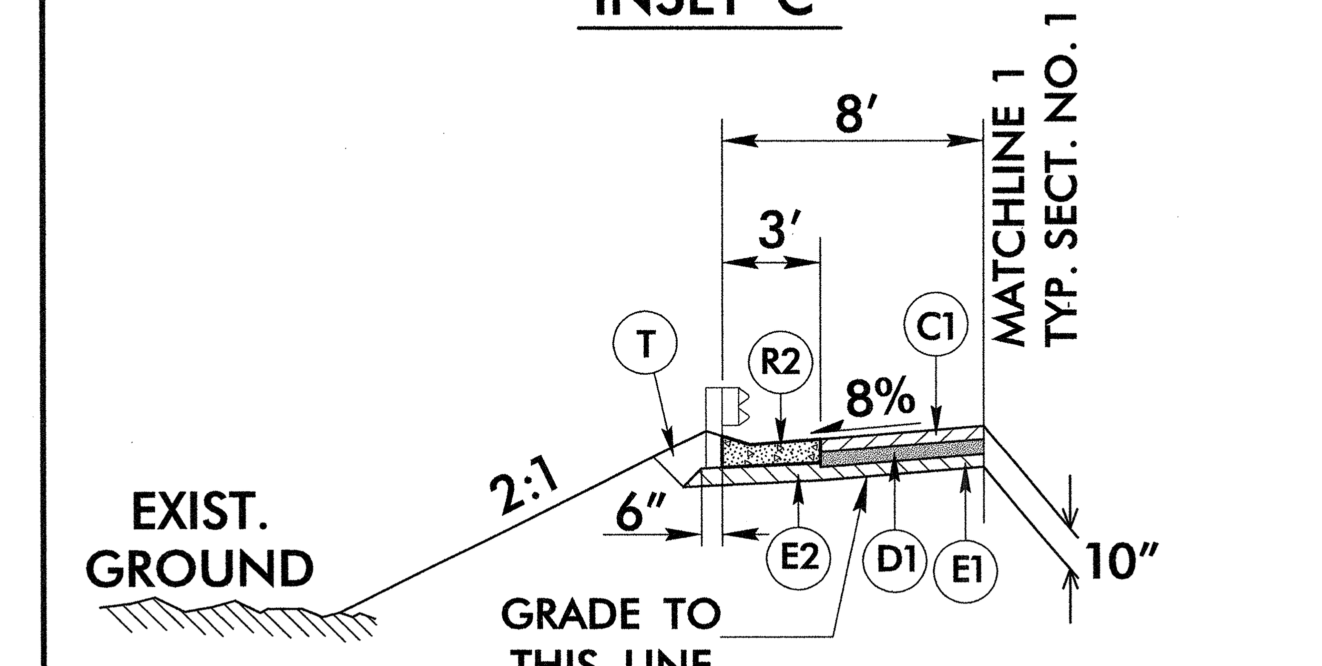

USE INSET C AS FOLLOWS:
-L- Sta. 16+00.00 LT TO -L- Sta. 16+45+/- (BEG. BRIDGE) LT
-L- Sta. 18+10+/- (END BRIDGE) LT TO -L- Sta. 20+00.00 LT
-L- Sta. 16+15+/- RT TO -L- Sta. 16+45+/- (BEG. BRIDGE) RT
-L- Sta. 18+10+/- (END BRIDGE) RT TO -L- Sta. 18+40+/- RT

5/14/99
$$$$$$SYSTIME$$$$$
$$$$$$DGN$$$$$$$$$$$$$$$$
$$$$$$USERNAME$$$$
...\Roadway\Proj\B3694_rdy_typ.dgn 01/07/2005 01:01:22 PM