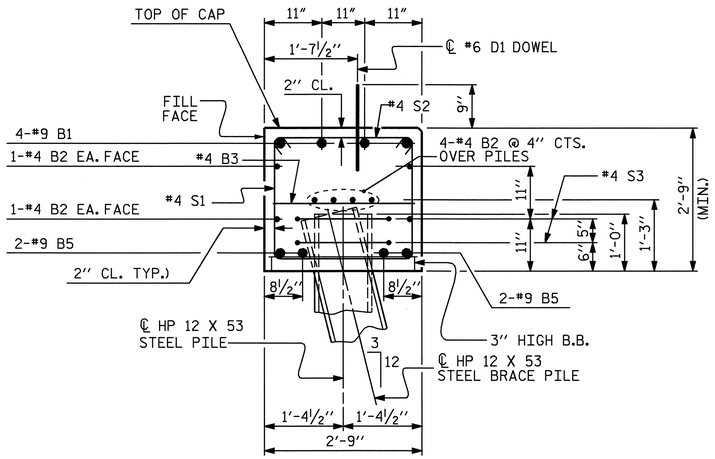

SECTION A-A

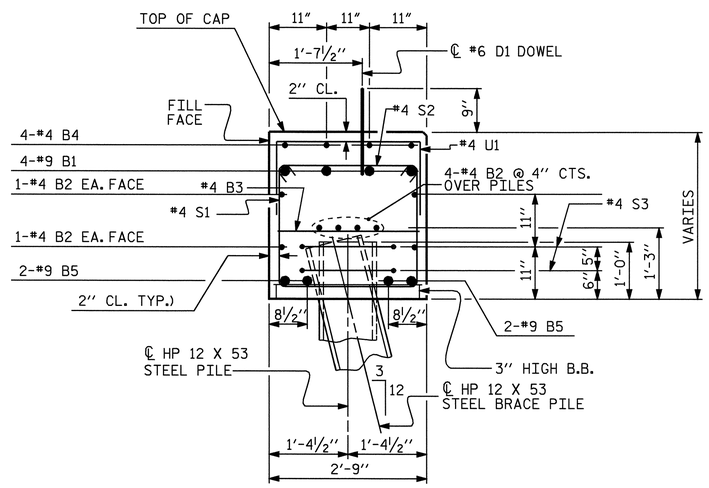

SECTION B-B

BAR TYPES

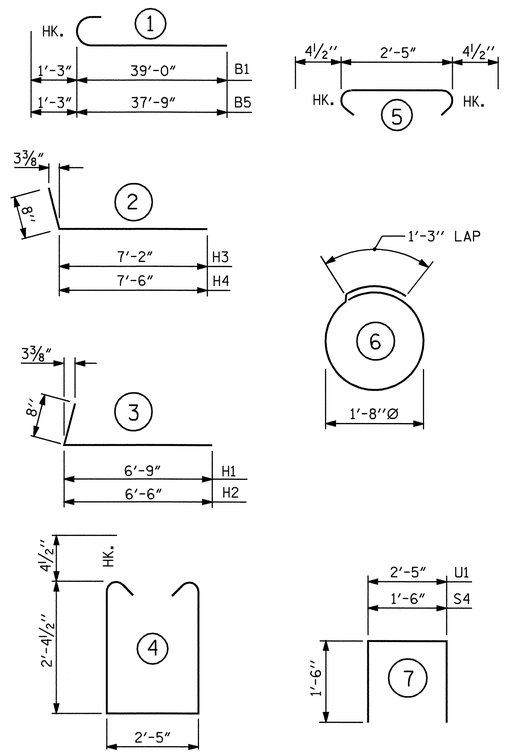

ALL BAR DIMENSIONS ARE OUT TO OUT.

BILL OF MATERIAL
END BENT #1

BAR	NO.	SIZE	TYPE	LENGTH	WEIGHT
B1	8	9	1	40′-3″	1095
B2	24	4	STR	24′-9″	397
B3	17	4	STR	2′-5″	27
B4	8	4	STR	22′-1″	118
B5	8	9	1	39′-0″	1061
D1	38	6	STR	1′-6″	86
H1	7	4	3	7′-5″	35
H2	7	4	3	7′-2″	34
H3	7	4	2	7′-10″	37
H4	7	4	2	8′-2″	38
K1	16	4	STR	4′-4″	46
S1	62	4	4	7′-11″	328
S2	62	4	5	3′-2″	131
S3	22	4	6	6′-6″	96
S4	4	4	7	4′-6″	12
U1	28	4	7	5′-5″	101
V1	24	4	STR	5′-3″	84
V2	26	4	STR	5′-5″	94
REINFORCING STEEL				LBS	3820

CLASS "A" CONCRETE BREAKDOWN

POUR #1
CAP & LOWER PART OF WINGS 23.0 YD3

POUR #2
UPPER PART OF WINGS 2.4 YD3

POUR #3
LATERAL GUIDES 0.1 YD3

CLASS "A" CONCRETE TOTAL 25.5 YD3

HP 12 x 53 STEEL PILES
NO. 11 LIN. FT. 330

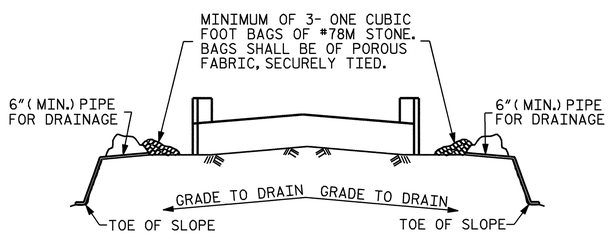

BAGGED STONE AND PIPE SHALL BE PLACED IMMEDIATELY AFTER COMPLETION OF END BENT EXCAVATION. PIPE MAY BE EITHER CONCRETE, CORRUGATED STEEL, CORRUGATED ALUMINUM ALLOY, OR CORRUGATED PLASTIC. PERFORATED PIPE WILL NOT BE ALLOWED.

BAGGED STONE SHALL REMAIN IN PLACE UNTIL THE ENGINEER DIRECTS THAT IT BE REMOVED. THE CONTRACTOR SHALL REMOVE AND DISPOSE OF SILT ACCUMULATIONS AT BAGGED STONE WHEN SO DIRECTED BY THE ENGINEER. BAGS SHALL BE REMOVED AND REPLACED WHENEVER THE ENGINEER DETERMINES THAT THEY HAVE DETERIORATED AND LOST THEIR EFFECTIVENESS.

NO SEPARATE PAYMENT WILL BE MADE FOR THIS WORK AND THE ENTIRE COST OF THIS WORK SHALL BE INCLUDED IN THE UNIT CONTRACT PRICE BID FOR THE SEVERAL PAY ITEMS.

TEMPORARY DRAINAGE AT END BENT

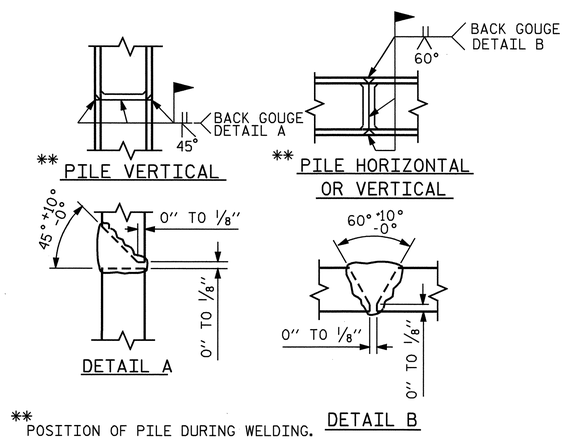

** POSITION OF PILE DURING WELDING.

PILE SPLICE DETAILS

PROJECT NO. B-3685
PITT COUNTY
STATION: 17+47.50 -L-

SHEET 3 OF 3

STATE OF NORTH CAROLINA
DEPARTMENT OF TRANSPORTATION
RALEIGH

SUBSTRUCTURE

END BENT #1

NORTH CAROLINA PROFESSIONAL SEAL 14045 ENGINEER TIMOTHY L. COGGINS
Timothy L. Coggins 10/21/04

REVISIONS						SHEET NO.
NO.	BY:	DATE:	NO.	BY:	DATE:	S-15
1			3			TOTAL SHEETS
2			4			27

DRAWN BY : PEGGY ADKINS DATE : 4-04
CHECKED BY : T. AVERETTE DATE : 5-04

21-OCT-2004 15:27
W:\squadr\b3685\padkins\Microstation\B3685_SD_EB1_01.dgn
padkins