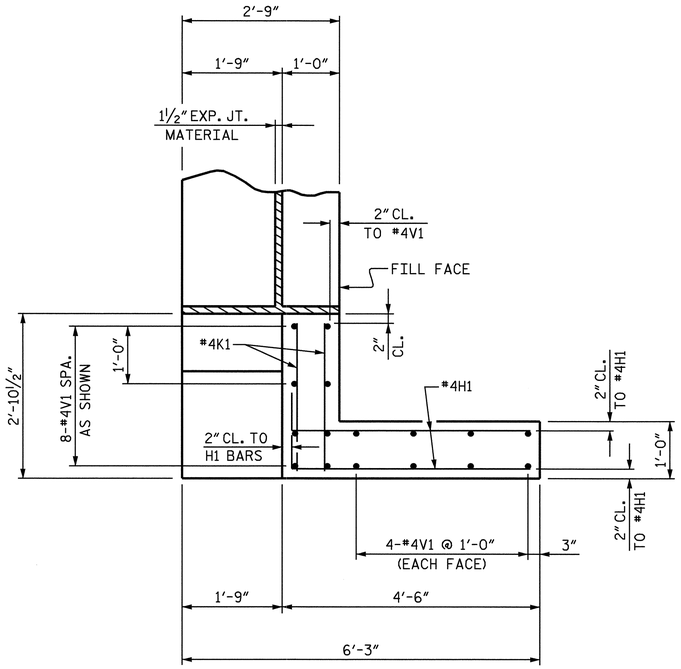

PLAN OF LEFT WING (W1)

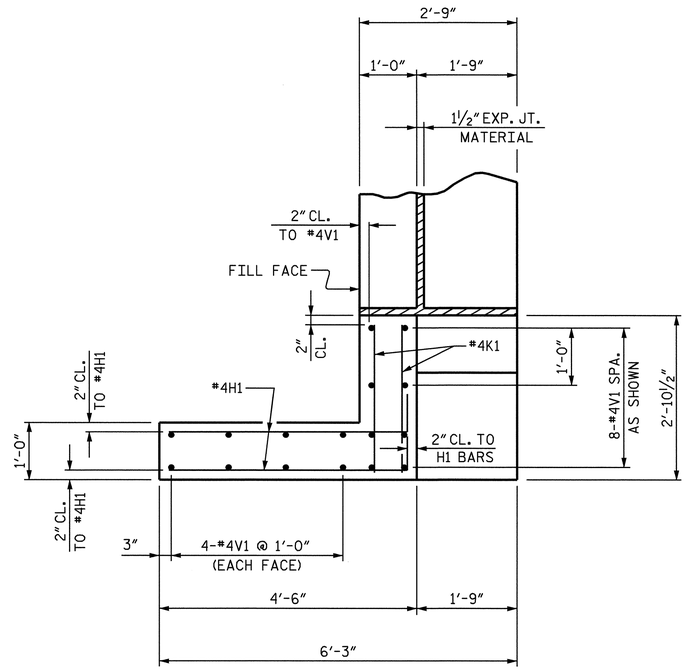

PLAN OF RIGHT WING (W2)

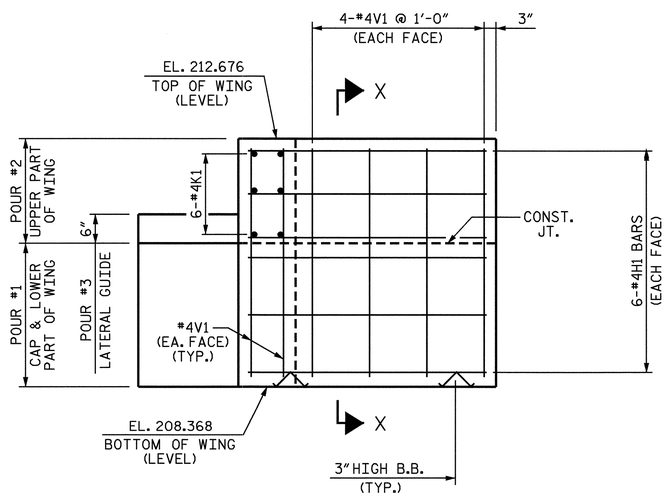

ELEVATION OF LEFT WING (W1)

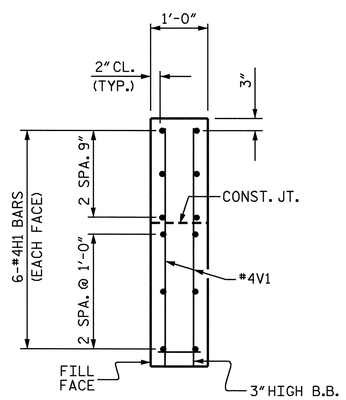

SECTION X-X

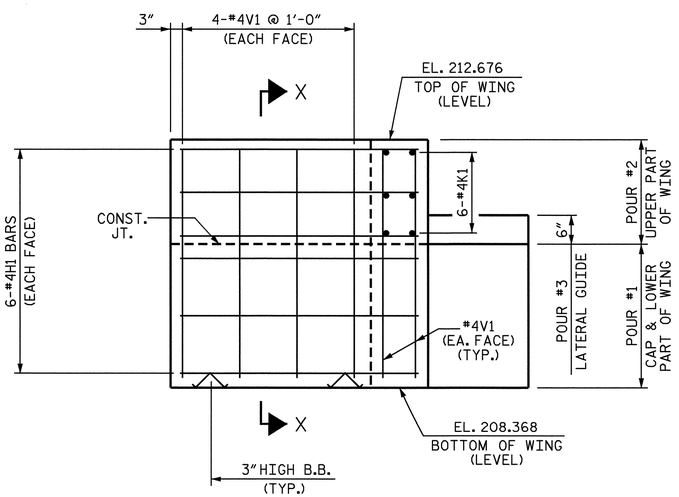

ELEVATION OF RIGHT WING (W2)

PROJECT NO. B-4515
FRANKLIN COUNTY
STATION: 15+37.00 -L-

SHEET 2 OF 3

STATE OF NORTH CAROLINA
DEPARTMENT OF TRANSPORTATION
RALEIGH

SUBSTRUCTURE
END BENT #1

NORTH CAROLINA PROFESSIONAL SEAL 10730 ENGINEER D. ANDREW DAVENPORT, JR.

REVISIONS						SHEET NO.
NO.	BY:	DATE:	NO.	BY:	DATE:	S-12
1			3			TOTAL SHEETS
2			4			24

DRAWN BY : S. P. LAM DATE : 6-18-04
CHECKED BY : H. T. BARBOUR DATE : 07-04

10-SEP-2004 07:52
W:\squadj\b4515\slam\Microstation\B-4515_sd_E*_01.dgn
ddavenport

NCDOT