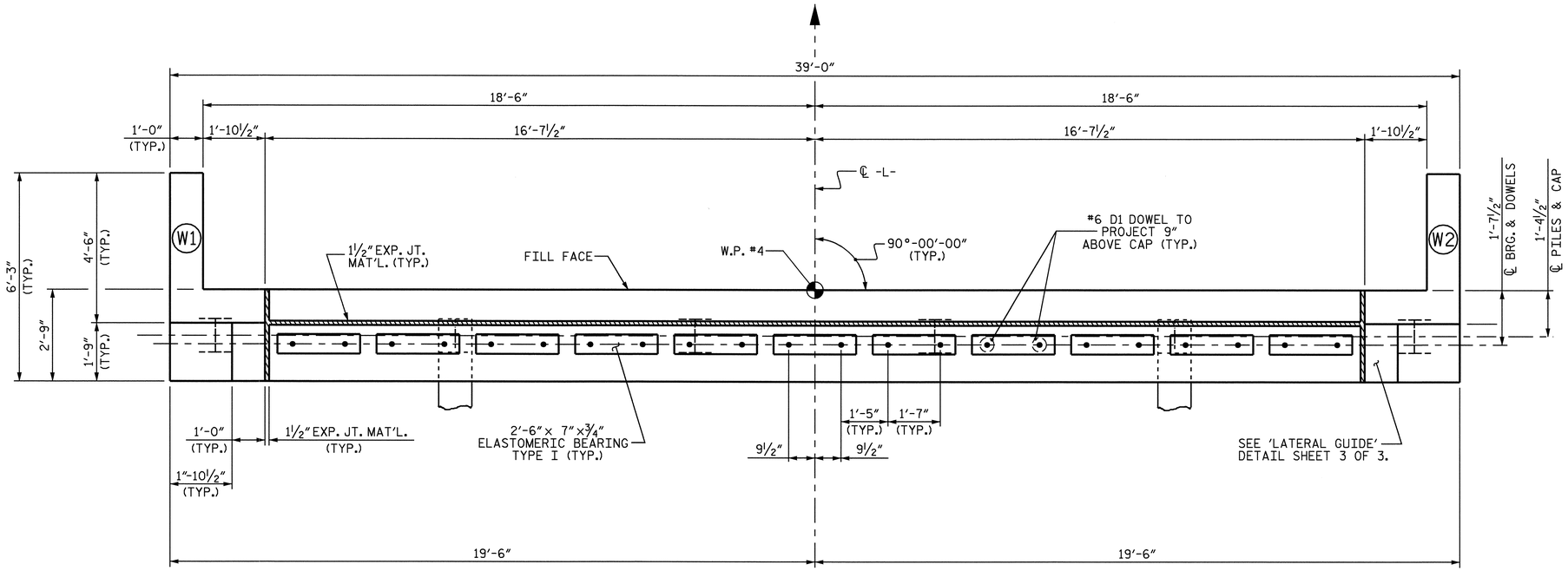

PLAN

NOTES

STIRRUPS IN CAP MAY BE SHIFTED AS NECESSARY TO CLEAR DOWELS.

THE CONTRACTOR SHALL PROVIDE FOR INSTALLATION OF THE 4"DIAMETER DRAIN PIPE THROUGH THE WING WALL AS REQUIRED FOR REINFORCED BRIDGE APPROACH FILLS, SEE THE ROADWAY PLANS. REINFORCING STEEL IN THE WING WALL MAY BE SHIFTED AS NECESSARY TO CLEAR THE DRAIN PIPE.

THE LATERAL GUIDE AT EACH END OF THE CAP IS NOT TO BE POURED UNTIL AFTER CORED SLAB UNITS ARE IN PLACE.

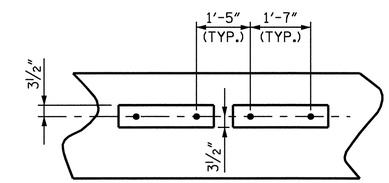

BEARING DETAIL

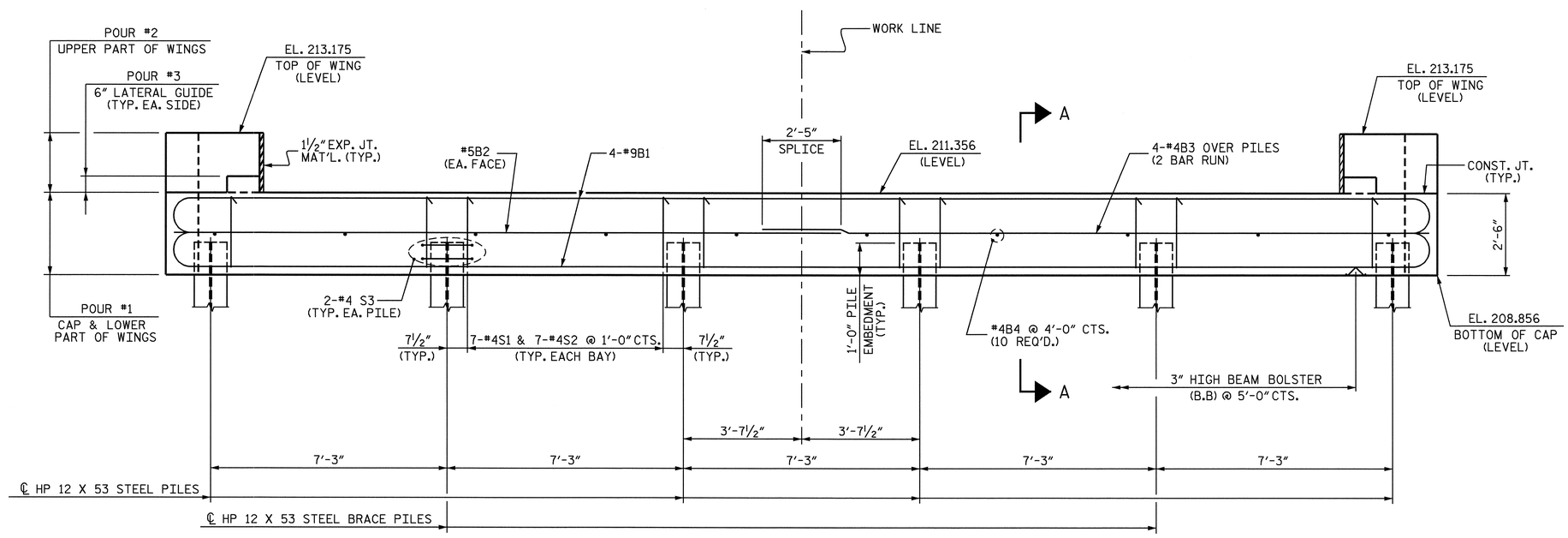

ELEVATION

PROJECT NO. B-4515

FRANKLIN COUNTY

STATION: 15+37.00 -L-

SHEET 1 OF 3

STATE OF NORTH CAROLINA
DEPARTMENT OF TRANSPORTATION
RALEIGH

SUBSTRUCTURE
END BENT #2

NORTH CAROLINA PROFESSIONAL SEAL 10730 ENGINEER D. ANDREW DAVENPORT, JR.

REVISIONS						SHEET NO.
NO.	BY:	DATE:	NO.	BY:	DATE:	S-18
1			3			TOTAL SHEETS
2			4			24

DRAWN BY : S.P. LAM DATE : 6-24-04
CHECKED BY : H. T. BARBOUR DATE : 07-04

24-SEP-2004 08:20
W:\squadj\b4515\slam\Microstation\B-4515_sd_E*_01.dgn
addavenport