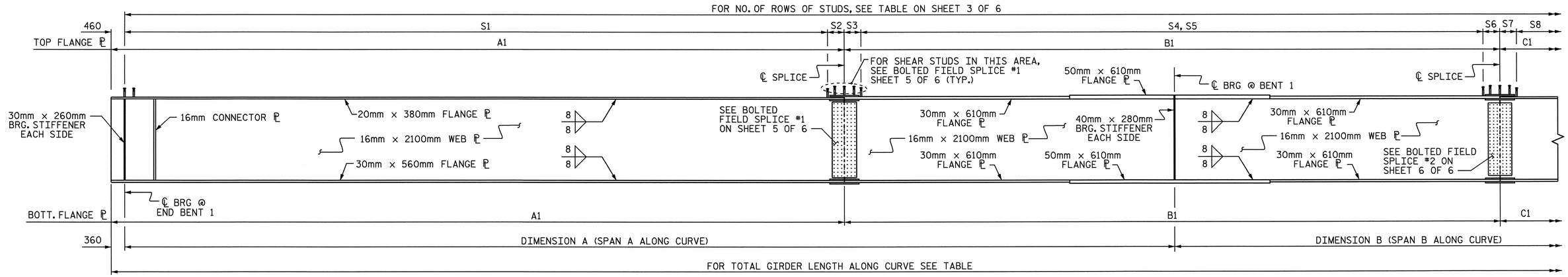

CURVED GIRDER ELEVATION

NOTE : INTERMEDIATE STIFFENER ℙ NOT SHOWN. FOR PLACEMENT SEE "FRAMING PLAN" SHEETS.

	TOTAL GDR. LENGTH	RADIUS	DIM. A	DIM. A1	DIM. B1	DIM. B2	DIM. B3	DIM. B4	DIM. B5	DIM. B6	DIM. B
GIRDER 1	207.212m	868.540	56.344m	40.244m	33.623m	11.140m	11.391m	11.092m	5.320m	6.071m	57.324m
GIRDER 2	206.404m	865.180	56.122m	39.901m	33.513m	11.595m	10.182m	11.736m	4.986m	5.196m	57.102m
GIRDER 3	205.595m	861.820	55.899m	39.556m	33.401m	11.549m	10.172m	11.680m	5.154m	5.018m	56.880m
GIRDER 4	204.787m	858.460	55.677m	39.211m	33.293m	11.505m	10.164m	11.623m	5.321m	4.843m	56.658m
NOTE : ALL DIMENSIONS ARE MEASURED ALONG THE ℄ OF GIRDER.											

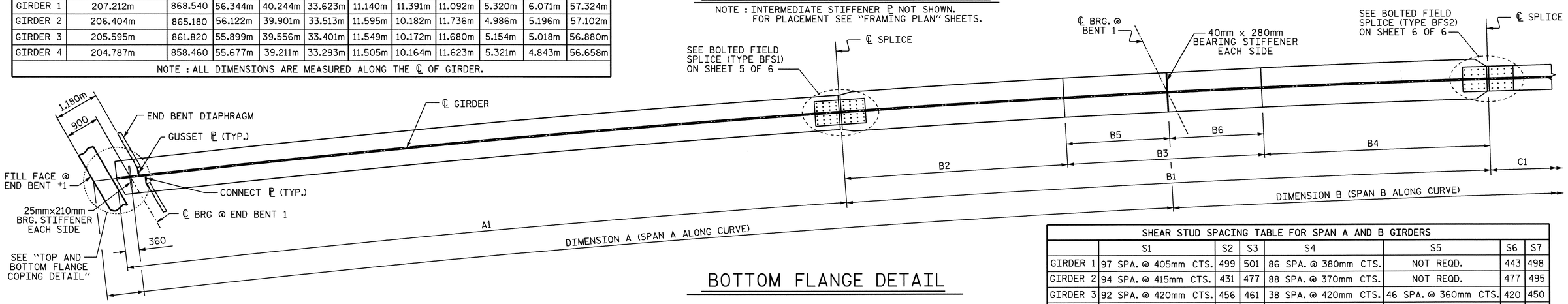

BOTTOM FLANGE DETAIL

SHEAR STUD SPACING TABLE FOR SPAN A AND B GIRDERS							
	S1	S2	S3	S4	S5	S6	S7
GIRDER 1	97 SPA. @ 405mm CTS.	499	501	86 SPA. @ 380mm CTS.	NOT REQD.	443	498
GIRDER 2	94 SPA. @ 415mm CTS.	431	477	88 SPA. @ 370mm CTS.	NOT REQD.	477	495
GIRDER 3	92 SPA. @ 420mm CTS.	456	461	38 SPA. @ 420mm CTS.	46 SPA. @ 360mm CTS.	420	450
GIRDER 4	93 SPA. @ 410mm CTS.	621	511	39 SPA. @ 410mm CTS.	48 SPA. @ 340mm CTS.	471	411
NOTE : ALL DIMENSIONS ARE SHOWN IN MILLIMETERS AND ARE MEASURED ALONG THE ℄ OF GIRDER.							

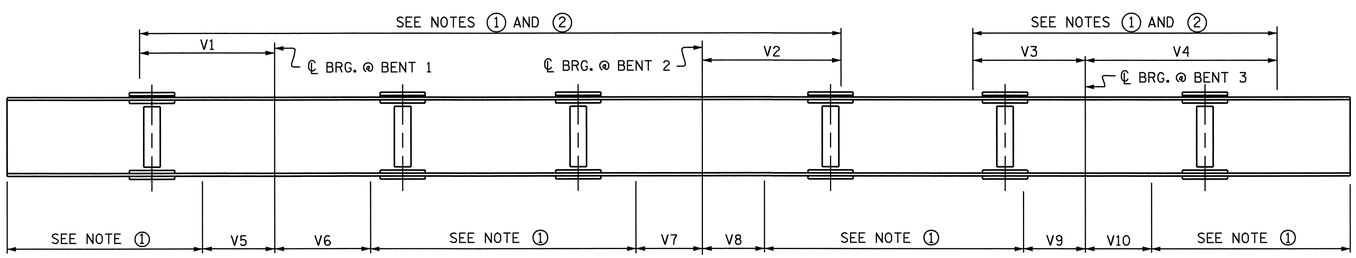

GIRDER MAKE UP

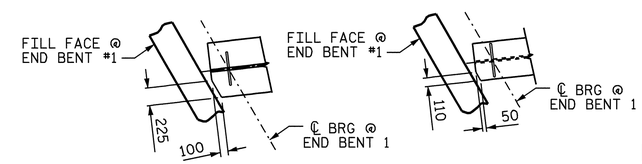

BOTTOM FLANGE

TOP FLANGE

TOP & BOTTOM FLANGE COPING DETAIL

NOTE ① : CHARPY V-NOTCH TESTS ARE REQUIRED FOR ALL TOP OR BOTTOM FLANGE PLATES WHICH FALL WITHIN THESE LIMITS, ALL WEB PLATES, AND ALL SPLICE PLATES. IF A PERMITTED SHOP FLANGE SPLICE IS NOT USED, CHARPY V-NOTCH TESTS WILL BE REQUIRED FOR THE ENTIRE FLANGE PLATE. FOR CHARPY V-NOTCH TESTS, SEE SPECIAL PROVISIONS.

NOTE ② : NO WELDING OF FORMS OR FALSEWORK TO THE TOP FLANGE WILL BE PERMITTED IN THIS REGION.

	DIM. V1	DIM. V2	DIM. V3	DIM. V4	DIM. V5	DIM. V6	DIM. V7	DIM. V8	DIM. V9	DIM. V10
GIRDER 1	18.123m	18.582m	15.065m	25.719m	9.688m	12.840m	8.925m	8.317m	8.301m	8.878m
GIRDER 2	17.570m	17.931m	14.437m	23.817m	10.181m	12.178m	9.567m	8.236m	8.741m	9.083m
GIRDER 3	17.512m	17.028m	14.310m	22.550m	10.146m	12.299m	9.469m	8.392m	8.549m	9.129m
GIRDER 4	18.563m	18.608m	14.982m	23.440m	9.886m	11.415m	9.156m	8.173m	8.655m	8.417m
NOTE : ALL DIMENSIONS ARE MEASURED ALONG THE ℄ OF GIRDER.										

CHARPY V-NOTCH TESTS FOR CONTINUOUS PLATE GIRDERS

PROJECT NO. R-0977A
CHEROKEE COUNTY
STATION: 68+58.000-LREV-

SHEET 1 OF 6

STATE OF NORTH CAROLINA
DEPARTMENT OF TRANSPORTATION
RALEIGH

SUPERSTRUCTURE

STRUCTURAL STEEL DETAILS

NORTH CAROLINA PROFESSIONAL SEAL 21638 ENGINEER LAURA E. SUTTON
12/22/04

REVISIONS						SHEET NO.
NO.	BY:	DATE:	NO.	BY:	DATE:	S-188
1			3			TOTAL SHEETS
2			4			230

DRAWN BY : B.N.BARODAWALA DATE : 10-18-04
CHECKED BY : MIKE ALLEN DATE : 12-04

21-DEC-2004 15:18
W:\SquadL\r0977a\str5\bbarodawala\R0977A_sd_SS_05.dgn
lsutton

STR. #5