NOTES

ASSUMED LIVE LOAD ----------MS18 OR ALTERNATE LOADING.

DESIGN FILL = 31.91m

FOR OTHER DESIGN DATA AND NOTES SEE STANDARD NOTE SHEET.

ALL DIMENSIONS ARE SHOWN IN MILLIMETERS UNLESS OTHERWISE NOTED ON THE PLANS.

ALL ELEVATIONS ARE SHOWN IN METERS.

76mm Ø WEEP HOLES INDICATED TO BE IN ACCORDANCE WITH THE SPECIFICATIONS.

THE RESIDENT ENGINEER SHALL CHECK THE LENGTH OF CULVERT BEFORE STAKING IT OUT TO MAKE CERTAIN THAT IT WILL PROPERLY TAKE CARE OF THE FILL.

DIMENSIONS FOR WING LAYOUT AS WELL AS ADDITIONAL REINFORCING STEEL EMBEDDED IN BARREL ARE SHOWN ON WING SHEET.

TRANSVERSE CONSTRUCTION JOINTS SHALL BE USED IN THE BARREL, SPACED TO LIMIT THE POURS TO A MAXIMUM OF 21.0m. LOCATION OF JOINTS SHALL BE SUBJECT TO APPROVAL OF THE ENGINEER.

AT THE CONTRACTOR'S OPTION, HE MAY SPLICE THE VERTICAL REINFORCING STEEL IN THE INTERIOR FACE OF EXTERIOR WALL AND BOTH FACES OF INTERIOR WALLS ABOVE LOWER WALL CONSTRUCTION JOINT. THE SPLICE LENGTH SHALL BE AS PROVIDED IN THE SPLICE LENGTH CHART SHOWN ON THE PLANS. EXTRA WEIGHT OF STEEL DUE TO THE SPLICES SHALL BE PAID FOR BY THE CONTRACTOR.

WHEN THE CONTRACTOR EXCAVATES THE STREAM BED AT THE CULVERT SITE, THE MATERIAL SHALL BE STOCKPILED AND AFTER COMPLETION OF EACH CONSTRUCTION STAGE, THE CONTRACTOR SHALL PLACE THE MATERIAL BACK ON THE FLOOR SLAB OF THE CULVERT TO A DEPTH OF 300mm, THE COST TO PLACE THE ORIGINAL STREAM BED MATERIAL INSIDE THE BOX CULVERT SHALL BE INCLUDED IN THE LUMP SUM PRICE BID FOR "CULVERT EXCAVATION".

FOR EROSION CONTROL PLANS, SEE ROADWAY PLANS.

THE CONTRACTOR SHALL PROVIDE INDEPENDENT ASSURANCE SAMPLES OF REINFORCING STEEL AS FOLLOWS : FOR PROJECTS REQUIRING UP TO 360,000 KILOGRAMS OF REINFORCING STEEL, ONE 760mm SAMPLE OF EACH SIZE BAR USED. AND FOR PROJECTS REQUIRING OVER 360,000 KILOGRAMS OF REINFORCING STEEL, TWO 760mm SAMPLES OF EACH SIZE BAR USED. THE BARS FROM WHICH THE SAMPLE ARE TAKEN MUST THEN BE SPLICED WITH REPLACEMENT BARS OF THE SIZE AND LENGTH OF THE SAMPLE, PLUS A MINIMUM LAP SPLICE OF THIRTY BAR DIAMETERS.

CONCRETE IN CULVERT TO BE PLACED IN THE FOLLOWING ORDER :

A. SECTION VIEWS A-A , B-B USED FOR PARTS 1 & 2 (SEE SHEETS 6 AND 7 OF 14 FOR SECTION VIEWS)

   1. WINGS FOOTINGS, FLOOR SLAB, AND DEBRIS DEFLECTOR SLAB INCLUDING 100mm OF ALL VERTICAL WALLS.

   2. THE REMAINING PORTION OF ALL VERTICAL WALLS.

   3. THE ENTIRE ROOF SLAB FOR PART 2.

B. SECTION VIEWS C-C , D-D, E-E AND F-F USED FOR PARTS 3, 4, 5A, 5B, 6, AND 7 (SEE SHEETS 6 AND 7 OF 14 FOR SECTION VIEWS)

   STAGE 1 :

   1. WINGS FOOTINGS AND FLOOR SLAB INCLUDING 100mm OF ALL VERTICAL WALLS.
   2. THE REMAINING PORTION OF ALL VERTICAL WALLS.

   STAGE 2 :

   1. WINGS FOOTINGS, FLOOR SLAB, AND REMAINING PORTION OF DEBRIS DEFLECTOR SLAB INCLUDING 100mm OF ALL VERTICAL WALLS.
   2. THE REMAINING PORTION OF ALL VERTICAL WALLS.

   STAGE 3 :

   THE ROOF SLAB POURED IN ITS ENTIRETY FOR PARTS 1 & 5A, 3, 6 & 7, AND 4 & 5B.

NO PRECAST REINFORCED BOX CULVERT OPTION WILL BE ALLOWED.

FOR SUBMITTAL OF WORKING DRAWINGS, SEE SPECIAL PROVISIONS.

FOR FALSEWORK AND FORMWORK, SEE SPECIAL PROVISIONS.

FOR CRANE SAFETY, SEE SPECIAL PROVISIONS.

BAR TYPES

BAR DIMENSIONS ARE OUT TO OUT

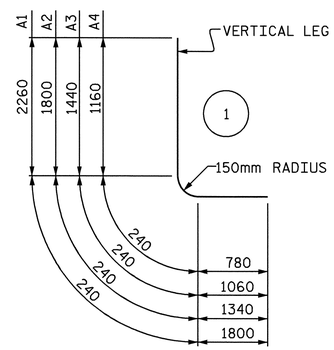

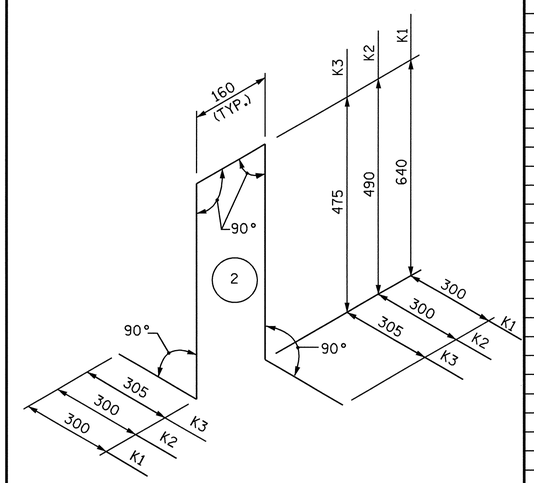

REINFORCING STEEL BAR SCHEDULE

BAR	NO.	SIZE	TYPE	LENGTH	WEIGHT	BAR	NO.	SIZE	TYPE	LENGTH	WEIGHT	BAR	NO.	SIZE	TYPE	LENGTH	WEIGHT
A100	488	#19	STR	5620	6130	A303	2	#19	STR	5760	26	A430	2	#19	STR	3260	15
A101	2	#19	STR	5520	25	A304	2	#19	STR	5900	26	A431	2	#19	STR	3340	15
A102	2	#19	STR	5720	26	A305	2	#19	STR	6060	27	A432	2	#19	STR	3420	15
A103	2	#19	STR	5920	26	A306	2	#19	STR	6200	28						
A104	2	#19	STR	6120	27	A307	2	#19	STR	6360	28	A450	187	#19	STR	5440	2274
A105	2	#19	STR	6320	28	A308	2	#19	STR	6500	29						
A106	2	#19	STR	6520	29	A309	2	#19	STR	6660	30	A1	768	#25	1	4300	13120
A107	2	#19	STR	6720	30	A310	2	#19	STR	6800	30	A2	768	#25	1	3380	10313
A108	2	#19	STR	6920	31	A311	2	#19	STR	6960	31	A3	934	#19	1	2740	5720
A109	2	#19	STR	7120	32	A312	2	#19	STR	7100	32	A4	932	#19	1	2180	4541
A110	2	#19	STR	7320	33	A313	2	#19	STR	7260	32						
A111	2	#19	STR	7520	34	A314	2	#19	STR	7400	33	B1	368	#19	STR	3860	3175
A112	2	#19	STR	7720	35	A315	2	#19	STR	7560	34	B2	384	#19	STR	2180	1871
						A316	2	#19	STR	7700	34	B3	765	#22	STR	3860	8983
A150	310	#19	STR	5440	3769							B4	448	#19	STR	3540	3545
						A350	433	#19	STR	5440	5265	B5	933	#16	STR	2180	3157
A20	88	#19	STR	4240	834							B6	613	#13	STR	3540	2157
A21	88	#19	STR	2340	460	A40	59	#25	STR	4520	1060						
						A41	59	#25	STR	2340	549	C1	360	#13	STR	7480	2677
A25	184	#19	STR	4160	1711							C2	900	#13	STR	8340	7461
A26	184	#19	STR	2240	921	A45	246	#19	STR	3900	2144	C3	123	#13	STR	9000	1100
						A46	246	#19	STR	2240	1232	C4	180	#13	STR	7300	1306
A200	488	#19	STR	5960	6500							C5	320	#13	STR	7840	2494
A201	2	#19	STR	4140	19	A400	325	#19	STR	5620	4082	C6	127	#13	STR	5800	732
A202	2	#19	STR	4240	19	A401	2	#19	STR	4100	18	C7	90	#13	STR	4700	420
A203	2	#19	STR	4340	19	A402	2	#19	STR	4180	19	C8	317	#13	STR	1760	555
A204	2	#19	STR	4440	20	A403	2	#19	STR	4260	19						
A205	2	#19	STR	4540	20	A404	2	#19	STR	4320	19	D1	16	#16	STR	1380	34
A206	2	#19	STR	4640	21	A405	2	#19	STR	4440	20	D2	175	#19	STR	680	266
A207	2	#19	STR	4740	21	A406	2	#19	STR	4480	20	D3	70	#19	STR	530	83
A208	2	#19	STR	4840	22	A407	2	#19	STR	4560	20						
A209	2	#19	STR	4940	22	A408	2	#19	STR	4620	21	G1	4	#16	STR	5460	34
A210	2	#19	STR	5040	23	A409	2	#19	STR	4700	21	G2	4	#19	STR	7640	68
A211	2	#19	STR	5140	23	A410	2	#19	STR	4780	21						
A212	2	#19	STR	5240	23	A411	2	#19	STR	4860	22	K1	1232	#13	2	2040	2498
A213	2	#19	STR	2320	10	A412	2	#19	STR	4920	22	K2	808	#13	2	1740	1397
A214	2	#19	STR	2420	11	A413	2	#19	STR	5000	22	K3	812	#13	2	1720	1388
A215	2	#19	STR	2520	11	A414	2	#19	STR	5080	23						
A216	2	#19	STR	2620	12	A415	2	#19	STR	5160	23						
A217	2	#19	STR	2720	12	A416	2	#19	STR	5220	23						
A218	2	#19	STR	2820	13	A417	2	#19	STR	2300	10	TOTAL REINFORCING STEEL				126,765 kg	
A219	2	#19	STR	2920	13	A418	2	#19	STR	2360	11						
A220	2	#19	STR	3020	13	A419	2	#19	STR	2440	11						
A221	2	#19	STR	3120	14	A420	2	#19	STR	2520	11						
A222	2	#19	STR	3220	14	A421	2	#19	STR	2600	12						
A223	2	#19	STR	3320	15	A422	2	#19	STR	2660	12						
A224	2	#19	STR	3420	15	A423	2	#19	STR	2740	12						
						A424	2	#19	STR	2820	13						
A250	141	#19	STR	5440	1714	A425	2	#19	STR	2900	13						
						A426	2	#19	STR	2960	13						
A300	325	#25	STR	5620	7257	A427	2	#19	STR	3040	14						
A301	2	#19	STR	5460	24	A428	2	#19	STR	3120	14						
A302	2	#19	STR	5600	25	A429	2	#19	STR	3200	14						

SPLICE LENGTH CHART

BAR	SIZE	SPLICE LENGTH
A200	19	940
A250	19	940
A400	25	1220
A450	19	690
B1	19	690
B3	22	920
B4	19	690
B6	13	540
"C"	13	590

PROJECT NO. R-0977A
CHEROKEE COUNTY
STATION: 35+18.000-LREV-

SHEET 2 OF 14

STATE OF NORTH CAROLINA
DEPARTMENT OF TRANSPORTATION
RALEIGH

DOUBLE
2.400m X 2.400m
CONCRETE BOX CULVERT
84° SKEW

NORTH CAROLINA PROFESSIONAL SEAL 21638 ENGINEER LAURA E. SUTTON
12/22/04

REVISIONS						SHEET NO.
NO.	BY:	DATE:	NO.	BY:	DATE:	C-2
1			3			TOTAL SHEETS
2			4			14

DRAWN BY : V. X. NGUYEN DATE : 8-8-97
CHECKED BY : B.N. BARODAWALA DATE : 9/04

20-DEC-2004 15:53
W:\Squadl\r0977a\str6\scallaway\R0977A_sd_CU_06.dgn
lsutton

STR. #6