12-JUL-2004 15:06
W:\Special Details\ericward\stds\02 Stds to Special Details\metric\86202\0862d02m.dgn
ericward AT DS212260

6/10/99

STATE OF NORTH CAROLINA
DEPT. OF TRANSPORTATION
DIVISION OF HIGHWAYS
RALEIGH, N.C.

METRIC DETAIL DRAWING FOR
GUARDRAIL INSTALLATION

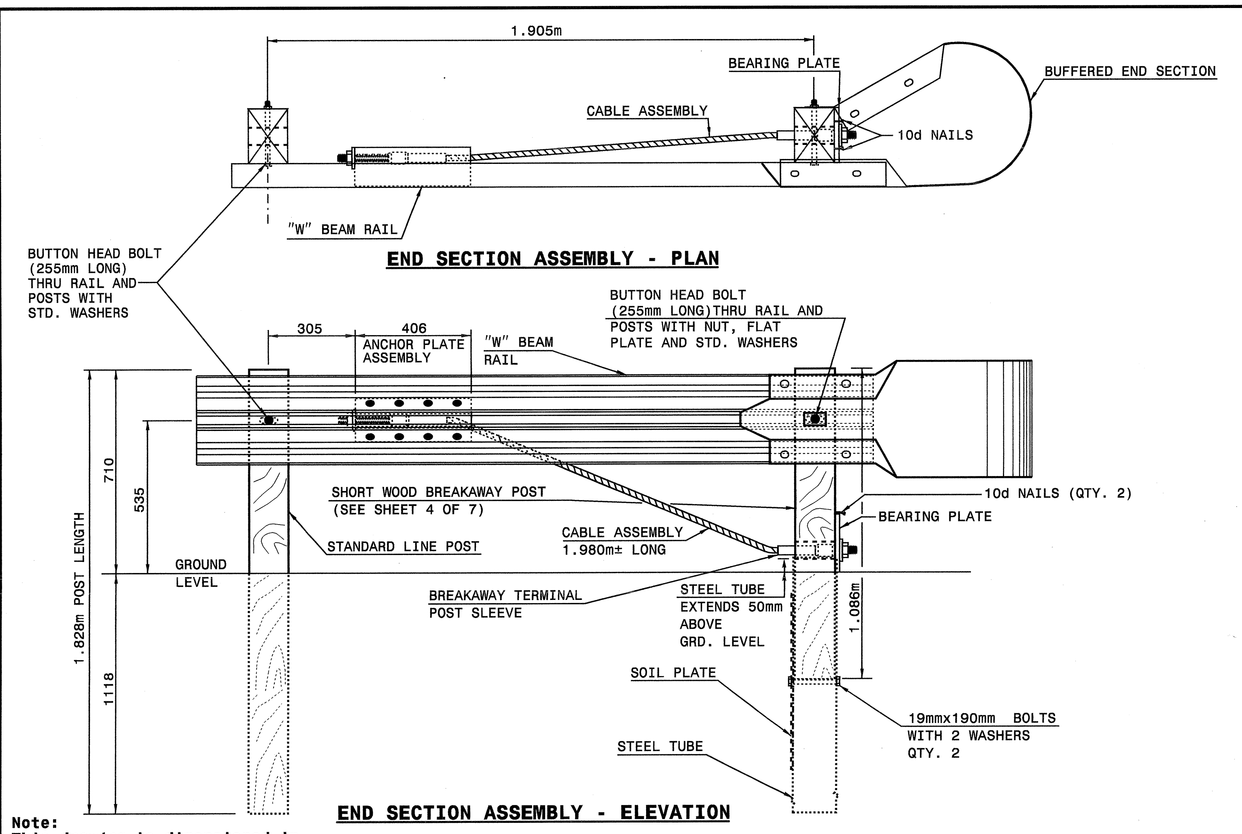

END SECTION ASSEMBLY - PLAN

END SECTION ASSEMBLY - ELEVATION

C.A.T.-1 SYSTEM

Note:
This drawing is dimensioned in millimeters unless otherwise depicted within the drawing.

SHEET 1 OF 7
862D02

STATE OF NORTH CAROLINA
DEPT. OF TRANSPORTATION
DIVISION OF HIGHWAYS
RALEIGH, N.C.

METRIC DETAIL DRAWING FOR
GUARDRAIL INSTALLATION

SHEET 1 OF 7
862D02

STATE OF NORTH CAROLINA
DEPT. OF TRANSPORTATION
DIVISION OF HIGHWAYS
RALEIGH, N.C.

METRIC DETAIL DRAWING FOR
GUARDRAIL INSTALLATION

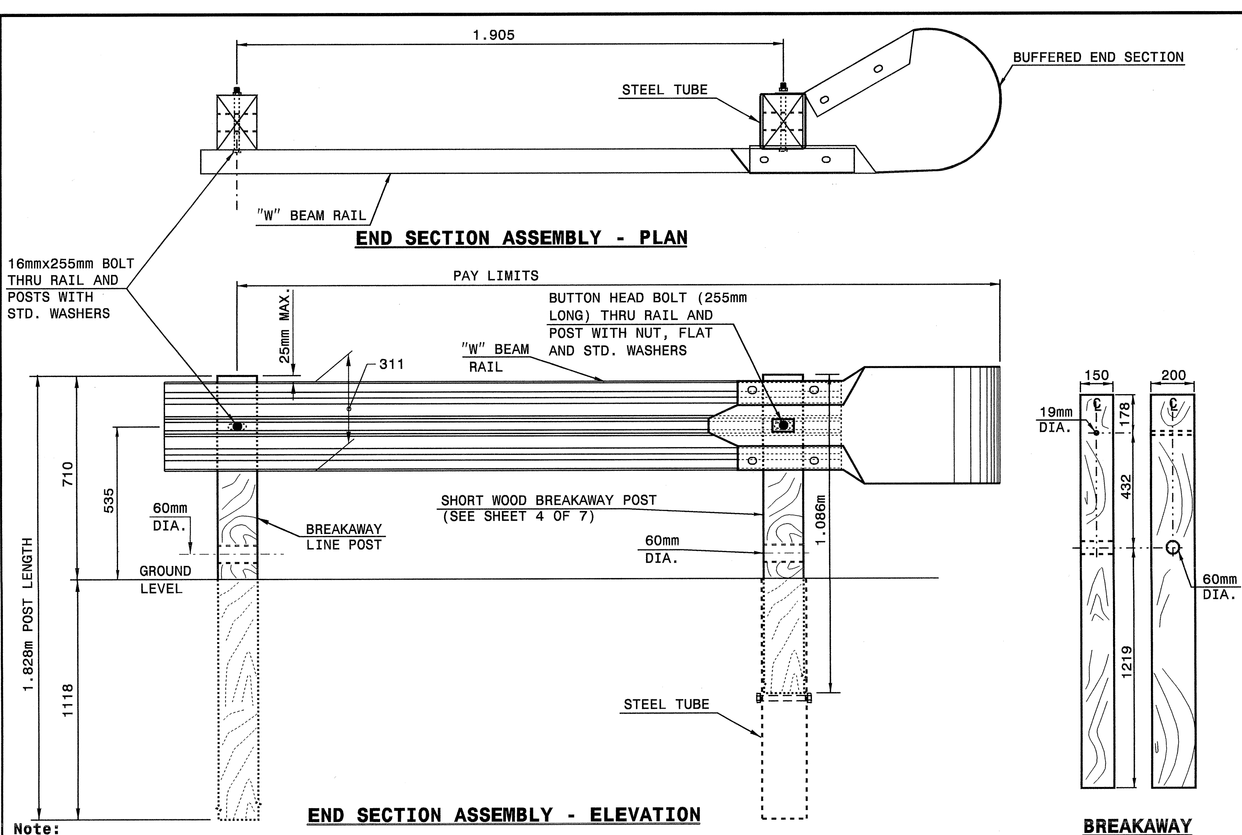

END SECTION ASSEMBLY - PLAN

END SECTION ASSEMBLY - ELEVATION

A.T.-1 SYSTEM

BREAKAWAY LINE POST

Note:
This drawing is dimensioned in millimeters unless otherwise depicted within the drawing.

SHEET 2 OF 7
862D02

STATE OF NORTH CAROLINA
DEPT. OF TRANSPORTATION
DIVISION OF HIGHWAYS
RALEIGH, N.C.

METRIC DETAIL DRAWING FOR
GUARDRAIL INSTALLATION

SHEET 2 OF 7
862D02

DESIGN SERVICES UNIT
STANDARDS AND SPECIAL DESIGN
Office 919-250-4128 FAX 919-250-4119

SEE PLATE FOR TITLE

ORIGINAL BY: 2002 STD.862.02 DATE:
MODIFIED BY: E.E. WARD DATE: 02-09-03
CHECKED BY: DATE:
FILE SPEC.: /usr/stds/02todetail/metric/86202/862d02m.dgn

NORTH CAROLINA PROFESSIONAL SEAL 022966 ENGINEER JOEL S. HOWERTON
12/14/04

PROJECT REFERENCE NO. B-3266
SHEET NO. 2-D
METRIC