PROJECT REFERENCE NO.	SHEET NO.
B-3703	2
ROADWAY DESIGN ENGINEER	PAVEMENT DESIGN ENGINEER

NORTH CAROLINA PROFESSIONAL SEAL 22878 ENGINEER VERONICA S. WEGRIFF WALKER 11/12/04

NORTH CAROLINA PROFESSIONAL SEAL 22896 ENGINEER CLARK S. MORRISON 11/24/04

RS&H

PAVEMENT SCHEDULE	
C1	PROP. APPROX. 2½" ASPHALT CONCRETE SURFACE COURSE, TYPE S9.5B, AT AN AVERATE RATE OF 140 LBS. PER SQ. YD. IN EACH OF TWO LAYERS
D1	PROP. APPROX. 3" ASPHALT CONCRETE INTERMEDIATE COURSE, TYPE I19.0B, AT AN AVERAGE RATE OF 342 LBS. PER SQ. YD.
E1	PROP. APPROX. 4" ASPHALT CONCRETE BASE COURSE, TYPE B25.0B, AT AN AVERAGE RATE OF 456 LBS. PER SQ. YD.
T	EARTH MATERIAL.

NOTE: PAVEMENT EDGE SLOPES ARE 1:1 UNLESS SHOWN OTHERWISE.

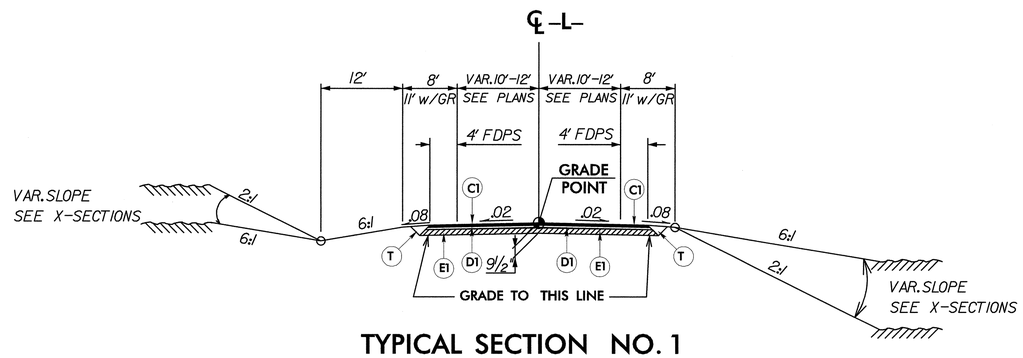

TYPICAL SECTION NO. 1

USE TYPICAL SECTION NO. 1

-L- STA. 14+80.00 TO -L- STA. 17+43.28 (BEGIN BRIDGE)
-L- STA. 18+92.42 (END BRIDGE) TO -L- STA. 21+67.00

NOTE: RESURFACE EXISTING FROM -L- STA. 21+67.00 TO -L- STA. 23+00.00 WITH (C1) (OVERLAY EXISTING PAVEMENT MARKINGS)

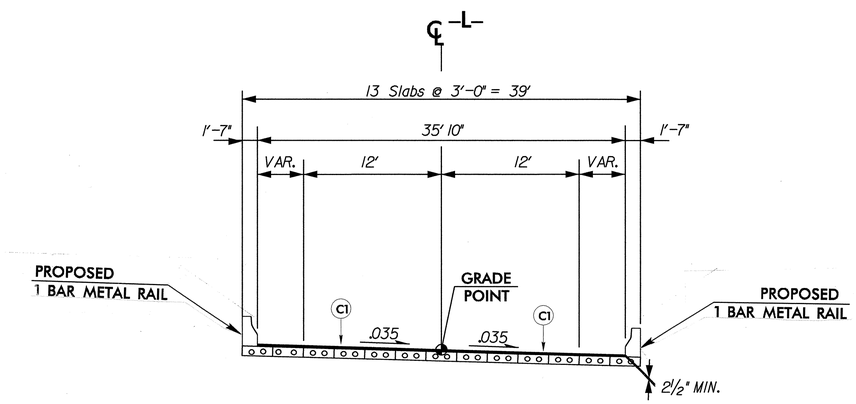

TYPICAL SECTION NO. 2

USE TYPICAL SECTION NO. 2

-L- STA. 17+43.28 TO -L- STA. 18+92.42