REVISIONS

GREENHORNE & O'MARA, INC.
5565 CENTERVIEW DRIVE, SUITE 107
RALEIGH, NORTH CAROLINA 27606
(919) 851-1919

METRIC

PROJECT REFERENCE NO.	SHEET NO.
R-2539C	2
R/W SHEET NO.	
ROADWAY DESIGN ENGINEER	PAVEMENT DESIGN ENGINEER

NORTH CAROLINA PROFESSIONAL SEAL 18509 ENGINEER DONNA C. KEENER 10-8-04

NORTH CAROLINA PROFESSIONAL SEAL 13398 ENGINEER DAVID CHI CHEN 10/11/04

CONST.REV.

R/W REV.

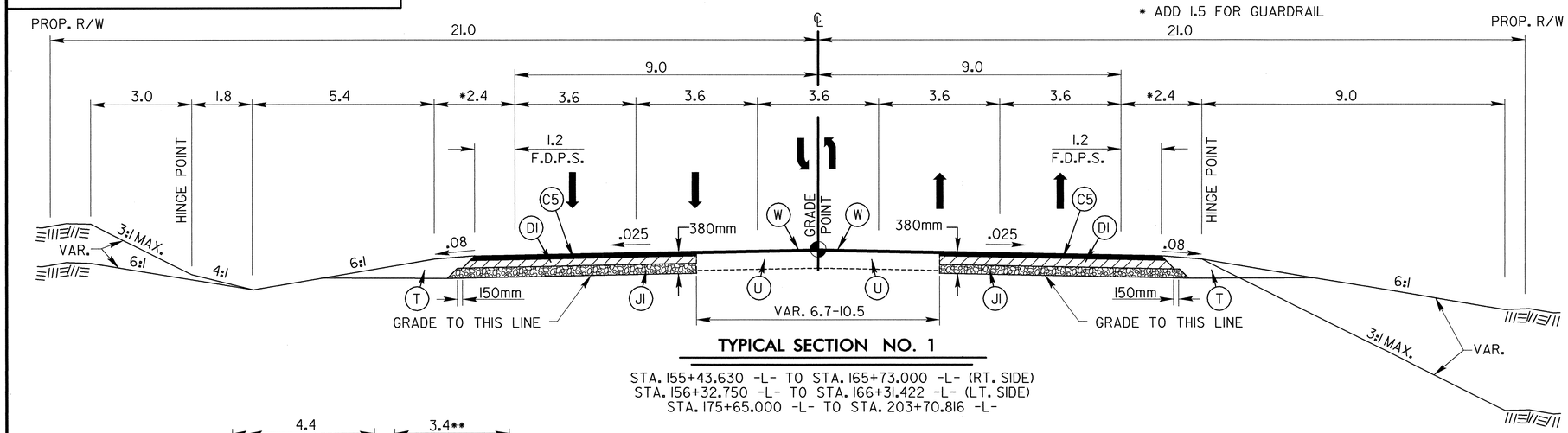

TYPICAL SECTION NO. 1

STA. 155+43.630 -L- TO STA. 165+73.000 -L- (RT. SIDE)
STA. 156+32.750 -L- TO STA. 166+31.422 -L- (LT. SIDE)
STA. 175+65.000 -L- TO STA. 203+70.816 -L-

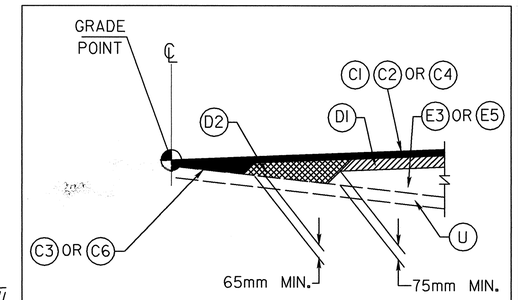

NOTE: ASPHALT CONC. INTERMEDIATE COURSE, TYPE 119.0C, IS NOT REQUIRED FOR ALL -Y- LINES. SEE TYPICAL SECTIONS AND PAVEMENT SCHEDULES.

DETAIL SHOWING METHOD OF WEDGING (W)

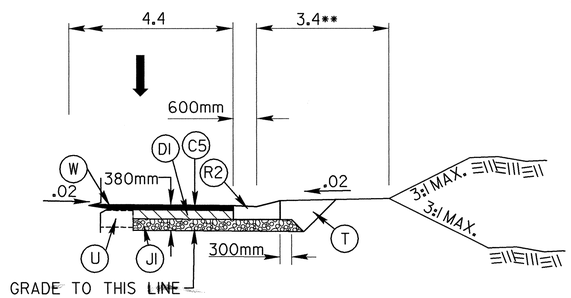

TYPICAL SECTION NO. 1-A

STA. 179+44.880 -L- TO STA. 181+55.000 -L- (RT. SIDE)
** USE 1.8 BERM STA. 181+12.474 -L- TO STA. 181+55.000 -L-

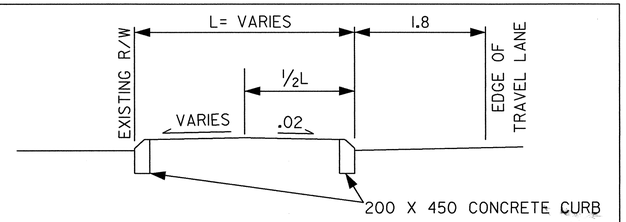

DETAIL FOR PROPOSED CHANNELIZATION

(200 X 450 CONCRETE CURB)

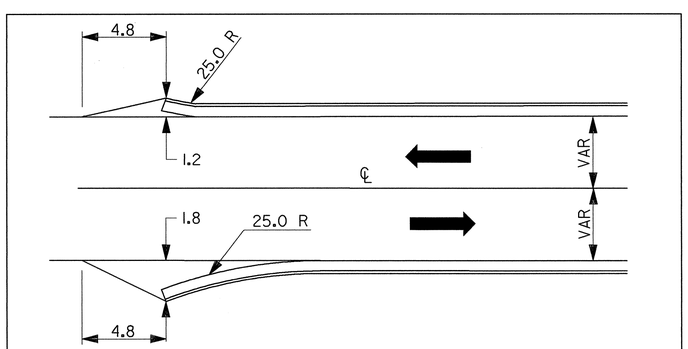

DETAIL OF CURB & GUTTER END TREATMENT

PAVEMENT SCHEDULE

C1	PROP. APPROX. 40 mm ASPHALT CONC. SURFACE COURSE, TYPE S9.5B, AT AN AVERAGE RATE OF 96 kg PER SQ. METER.
C2	PROP. APPROX. 80 mm ASPHALT CONC. SURFACE COURSE, TYPE S9.5B, AT AN AVERAGE RATE OF 96 kg PER SQ. METER IN EACH OF TWO LAYERS.
C3	PROP. VAR. DEPTH ASPHALT CONC. SURFACE COURSE, TYPE S9.5B, AT AN AVERAGE RATE OF 2.40 kg PER SQ. METER PER 1 mm DEPTH, TO BE PLACED IN LAYERS NOT LESS THAN 40 mm OR GREATER THAN 50 mm IN DEPTH.
C4	PROP. APPROX. 40 mm ASPHALT CONC. SURFACE COURSE, TYPE S9.5C, AT AN AVERAGE RATE OF 96 kg PER SQ. METER.
C5	PROP. APPROX. 80 mm ASPHALT CONC. SURFACE COURSE, TYPE S9.5C, AT AN AVERAGE RATE OF 96 kg PER SQ. METER IN EACH OF TWO LAYERS.
C6	PROP. VAR. DEPTH ASPHALT CONC. SURFACE COURSE, TYPE S9.5C, AT AN AVERAGE RATE OF 2.40 kg PER SQ. METER PER 1 mm DEPTH, TO BE PLACED IN LAYERS NOT LESS THAN 40 mm OR GREATER THAN 50 mm IN DEPTH.
DI	PROP. APPROX. 100 mm ASPHALT CONC. INTERMEDIATE COURSE, TYPE 119.0C, AT AN AVERAGE RATE OF 245.0 kg PER SQ. METER.

PAVEMENT SCHEDULE

D2	PROP. VAR. DEPTH ASPHALT CONC. INTERMEDIATE COURSE, TYPE 119.0C, AT AN AVERAGE RATE OF 2.45 KG kg PER SQ. METER PER 1mm DEPTH, TO BE PLACED IN LAYERS NOT LESS THAN 65mm OR GREATER THAN 110mm IN DEPTH.
E1	PROP. APPROX. 100 mm ASPHALT CONC. BASE COURSE, TYPE B25.0B, AT AN AVERAGE RATE OF 245.0 kg PER SQ. METER.
E2	PROP. APPROX. 120 mm ASPHALT CONC. BASE COURSE, TYPE B25.0B, AT AN AVERAGE RATE OF 294.0 kg PER SQ. METER.
E3	PROP. VAR. DEPTH ASPHALT CONC. BASE COURSE, TYPE B25.0B, AT AN AVERAGE RATE OF 2.45 KG kg PER SQ. METER PER 1mm DEPTH, TO BE PLACED IN LAYERS NOT LESS THAN 75mm OR GREATER THAN 140mm IN DEPTH.
E4	PROP. APPROX. 100 mm ASPHALT CONC. BASE COURSE, TYPE B25.0C, AT AN AVERAGE RATE OF 245.0 kg PER SQ. METER.
E5	PROP. VAR. DEPTH ASPHALT CONC. BASE COURSE, TYPE B25.0C, AT AN AVERAGE RATE OF 2.45 KG kg PER SQ. METER PER 1mm DEPTH, TO BE PLACED IN LAYERS NOT LESS THAN 75mm OR GREATER THAN 140mm IN DEPTH.
J1	PROP. 200 mm AGGREGATE BASE COURSE.
J2	PROP. VARIABLE DEPTH AGGREGATE BASE COURSE.
R1	750 mm CONCRETE CURB AND GUTTER
R2	1200 mm CONCRETE EXPRESSWAY GUTTER
S	100 mm CONCRETE SIDEWALK
T	EARTH MATERIAL
U	EXISTING PAVEMENT
V	MILLING (100mm)
W	WEDGING (SEE DETAIL THIS SHEET)

NOTE: ALL PAVEMENT EDGE SLOPES ARE 1:1 UNLESS OTHERWISE NOTED.

6/10/99

$$$$$$$SYSTIME$$$$$
$$$$USERNAME$$$