PROJECT REFERENCE NO.	SHEET NO.
U-2913B	2-A

METRIC

ROADWAY DESIGN ENGINEER — NORTH CAROLINA PROFESSIONAL SEAL 14571 ENGINEER JAMES A. SPEER — 10/20/04

PAVEMENT DESIGN ENGINEER — NORTH CAROLINA PROFESSIONAL SEAL 13368 ENGINEER DON-CHI CHEN — 10/21/04

PAVEMENT SCHEDULE	
C1	40 mm S9.5C
C2	80 mm S9.5C
C3	VAR. DEPTH S9.5C
D1	65 mm I19.0C
D2	100 mm I19.0C
D3	VAR. DEPTH I19.0C
E1	100 mm B25.0C
E2	150 mm B25.0C
E3	VAR. DEPTH B25.0C
R1	450 mm CONC. C AND G
R2	750 mm CONC. C AND G
R3	CONCRETE EXPRESSWAY GUTTER
R4	125 mm MONO. CONC. ISLAND (KEYED IN)
S	100 mm CONC. SIDEWALK
T	EARTH MATERIAL
U	EXISTING PAVEMENT
W	VAR. DEPTH ASPH. PAVM'T. (SEE WEDGING DETAIL)
Y	MILL EXISTING PAVEMENT

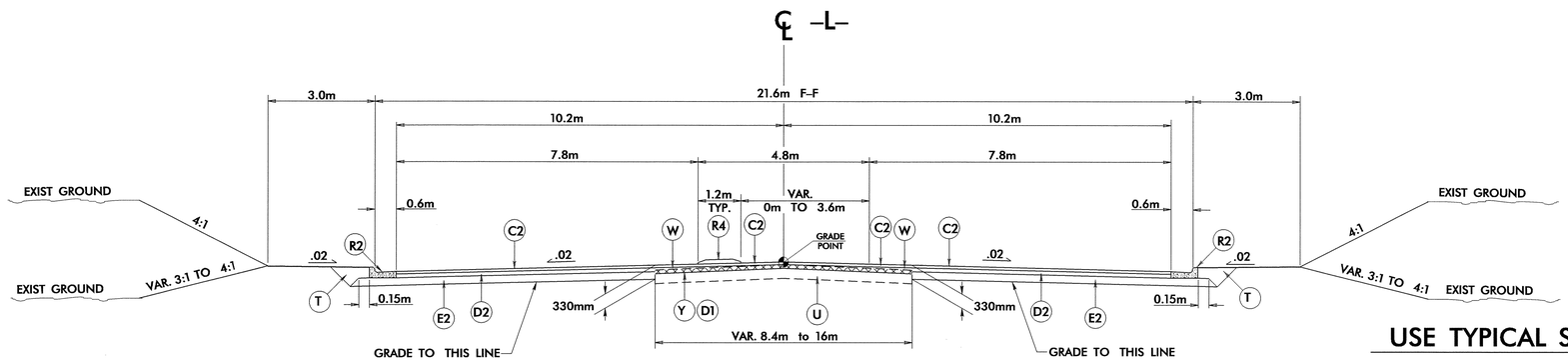

TYPICAL SECTION NO. 1

USE TYPICAL SECTION NO. 1

-L- STA. 49+40 TO STA. 50+90
-L- STA. 52+75 TO STA. 57+45
-L- STA. 58+42 TO STA. 60+64
-L- STA. 62+48 TO STA. 66+10

NOTE: TRANSITION FROM TYPICAL SECTION NO. 1 TO TYPICAL SECTION NO. 3 -L- STA. 66+10 TO STA. 67+00

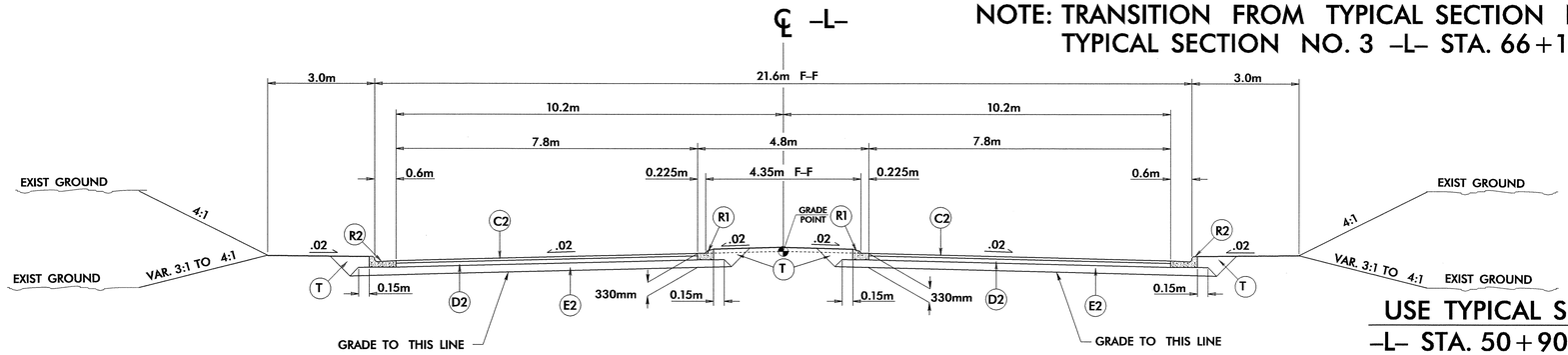

TYPICAL SECTION NO. 2

USE TYPICAL SECTION NO. 2

-L- STA. 50+90 TO STA. 52+75
-L- STA. 57+45 TO STA. 58+42
-L- STA. 60+64 TO STA. 62+48

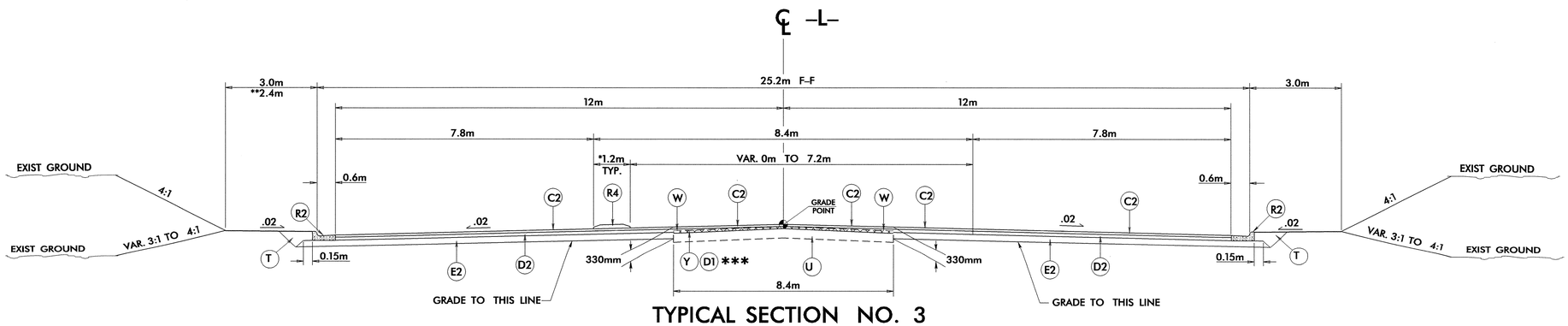

TYPICAL SECTION NO. 3

* VAR. 1.2m TO 7.679m (CONC. ISLAND WIDTH) -L- STA. 69+33 TO STA. 69+98.000 (SEE SHT. 17 FOR LOCATION)
** USE 2.4m BERM FROM -L- STA. 68+77.900 TO STA. 69+95.000 LT.
*** MILL EXISTING PAVEMENT FROM -L- 67+00 TO STA 68+00 AND -L- STA. 69+80 TO STA 71+28

USE TYPICAL SECTION NO. 3

-L- STA. 67+00 TO STA. 69+33

NOTE: TRANSITION FROM TYPICAL SECTION NO. 3 TO TYPICAL SECTION NO. 4 -L- STA. 69+33 TO STA. 71+28

19-OCT-2004 09:36 B:\RD212399\u2913bs02a.typ
DWGardner AT RD212399