PROJECT REFERENCE NO.	SHEET NO.
U-2913B	2-D

ROADWAY DESIGN ENGINEER — NORTH CAROLINA PROFESSIONAL SEAL 14571 ENGINEER JAMES A. SPEER — 10/20/04

PAVEMENT DESIGN ENGINEER — NORTH CAROLINA PROFESSIONAL SEAL 13368 ENGINEER DON-CHI CHEN — 10/21/04

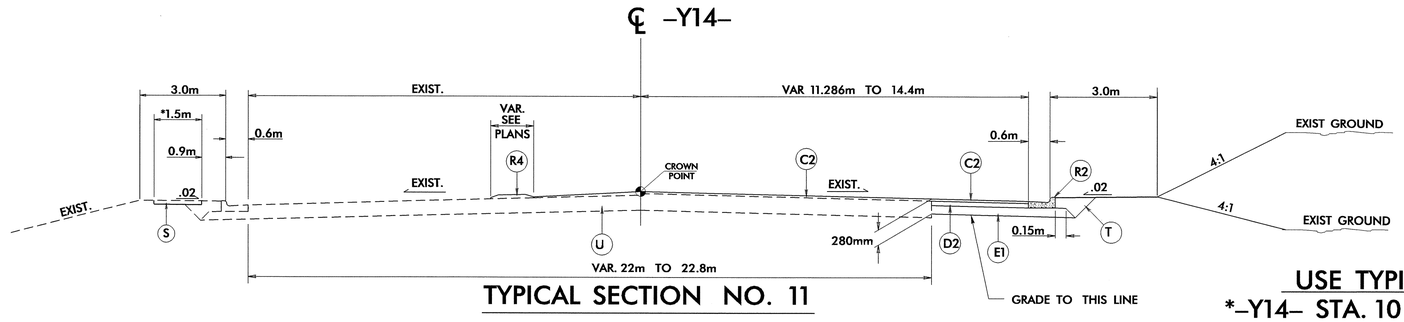

TYPICAL SECTION NO. 11

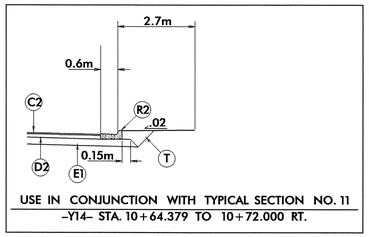

USE IN CONJUNCTION WITH TYPICAL SECTION NO. 11
-Y14- STA. 10+64.379 TO 10+72.000 RT.

USE TYPICAL SECTION NO. 11
*-Y14- STA. 10+00 TO STA. 10+34.649 LT.
-Y14- STA. 10+34.649 TO STA. 11+20

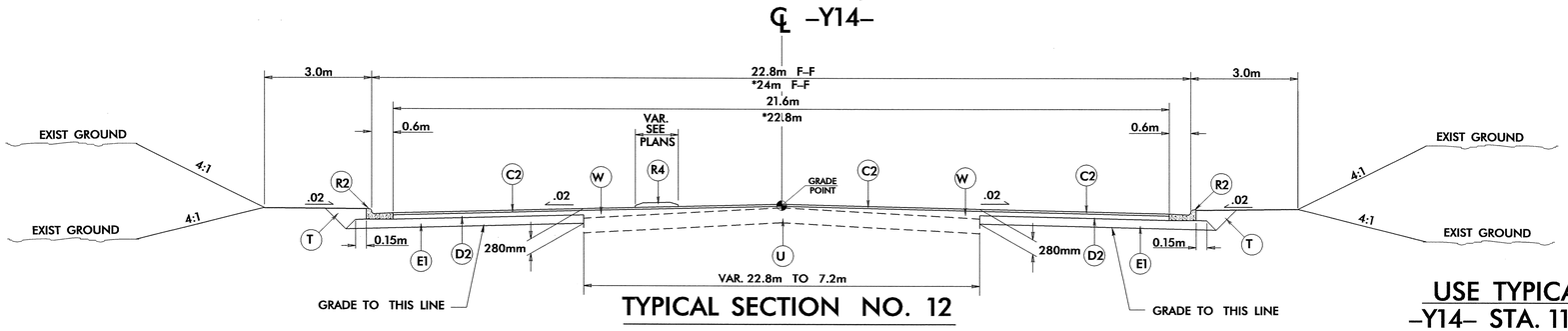

TYPICAL SECTION NO. 12

USE TYPICAL SECTION NO. 12
-Y14- STA. 11+20 TO STA. 11+53.895
*-Y14- STA. 11+78.064 TO STA. 14+40

PAVEMENT SCHEDULE	
C1	40 mm S9.5C
C2	80 mm S9.5C
C3	VAR. DEPTH S9.5C
D1	65 mm I19.0C
D2	100 mm I19.0C
D3	VAR. DEPTH I19.0C
E1	100 mm B25.0C
E2	150 mm B25.0C
E3	VAR. DEPTH B25.0C
R1	450 mm CONC. C AND G
R2	750 mm CONC. C AND G
R3	CONCRETE EXPRESSWAY GUTTER
R4	125 mm MONO. CONC. ISLAND (KEYED IN)
S	100 mm CONC. SIDEWALK
T	EARTH MATERIAL
U	EXISTING PAVEMENT
W	VAR. DEPTH ASPH. PAVM'T. (SEE WEDGING DETAIL)
Y	MILL EXISTING PAVEMENT

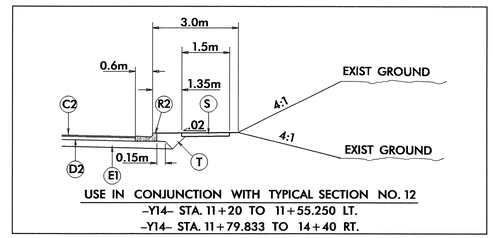

USE IN CONJUNCTION WITH TYPICAL SECTION NO. 12
-Y14- STA. 11+20 TO 11+55.250 LT.
-Y14- STA. 11+79.833 TO 14+40 RT.

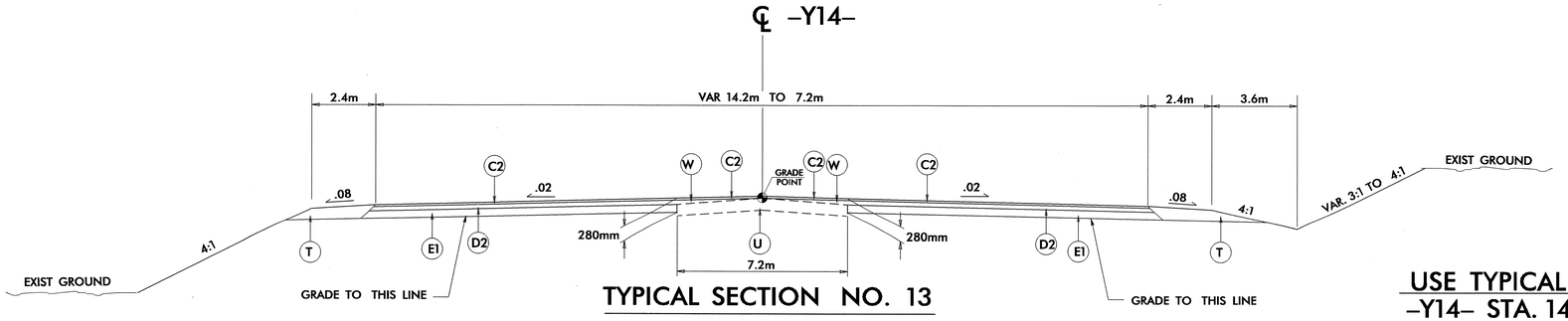

TYPICAL SECTION NO. 13

USE TYPICAL SECTION NO. 13
-Y14- STA. 14+40 TO STA. 15+50

26-AUG-2004 15:42 u2913b.typ
DWGardner AT RD212399