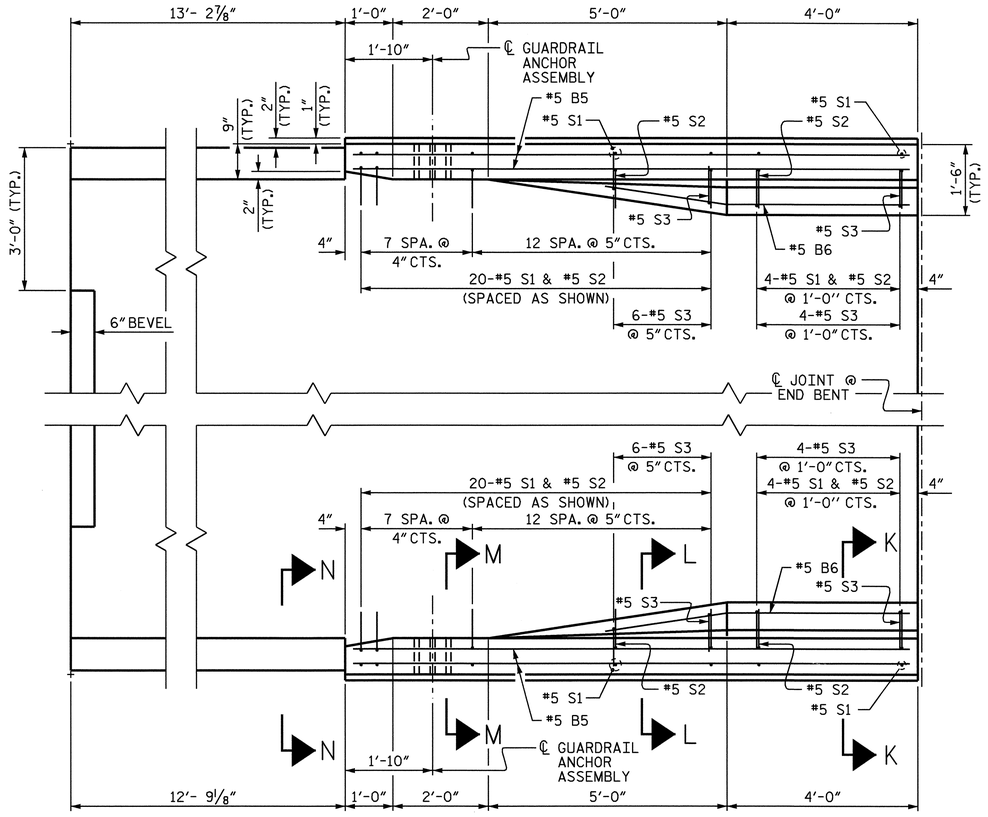

PLAN

BEGIN APPROACH SLAB SHOWN, END APPROACH SLAB SIMILAR

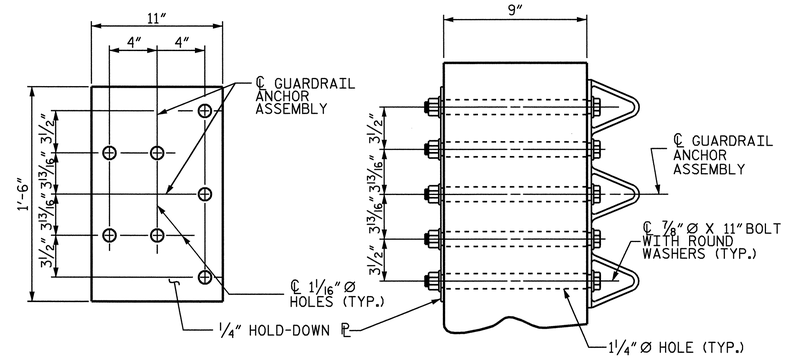

PLAN

SECTION E-E

GUARDRAIL ANCHOR ASSEMBLY DETAILS

NOTES

THE GUARDRAIL ANCHOR ASSEMBLY SHALL CONSIST OF A 1/4" HOLD DOWN PLATE AND 7 - 7/8" Ø BOLTS WITH NUTS AND WASHERS.

THE HOLD-DOWN PLATE SHALL CONFORM TO AASHTO M270 GRADE 36. AFTER FABRICATION, THE HOLD-DOWN PLATE SHALL BE HOT-DIP GALVANIZED IN ACCORDANCE WITH AASHTO M111.

BOLTS SHALL CONFORM TO THE REQUIREMENTS OF ASTM A307 AND NUTS SHALL CONFORM TO THE REQUIREMENTS OF AASHTO M291. BOLTS, NUTS AND WASHERS SHALL BE GALVANIZED. AT THE CONTRACTOR'S OPTION, STAINLESS STEEL BOLTS, NUTS AND WASHERS MAY BE USED AS AN ALTERNATE FOR THE 7/8" Ø GALVANIZED BOLTS, NUTS AND WASHERS. THEY SHALL CONFORM TO OR EXCEED THE MECHANICAL REQUIREMENTS OF ASTM A307. THE USE OF THIS ALTERNATE SHALL BE APPROVED BY THE ENGINEER.

AFTER INSTALLATION, THE EXPOSED THREAD OF THE BOLT SHALL BE BURRED WITH A SHARP POINTED TOOL.

THE COST OF THE GUARDRAIL ANCHOR ASSEMBLIES WITH BOLTS, NUTS AND WASHERS COMPLETE IN PLACE, SHALL BE INCLUDED IN THE LUMP SUM CONTRACT PRICE BID FOR BRIDGE APPROACH SLABS.

THE 1 1/4" Ø HOLES SHALL BE FORMED OR DRILLED WITH A CORE BIT. IMPACT TOOLS WILL NOT BE PERMITTED. ANY CONCRETE DAMAGED BY THIS WORK SHALL BE REPAIRED TO THE SATISFACTION OF THE ENGINEER.

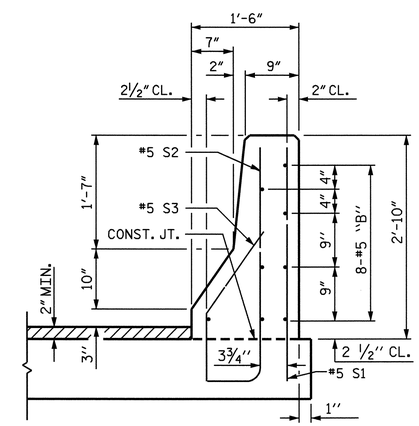

SECTION K-K

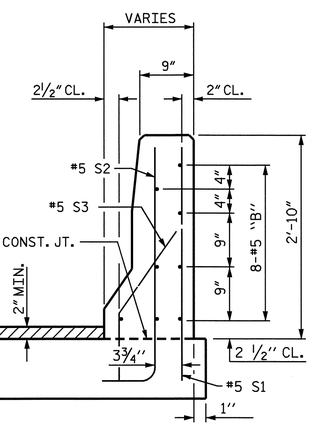

SECTION L-L

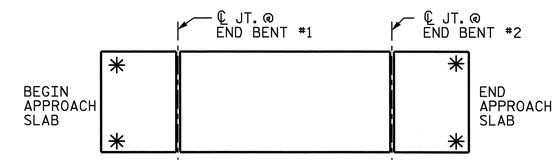

SKETCH SHOWING POINTS OF ATTACHMENT

* INDICATES POINTS OF ATTACHMENT

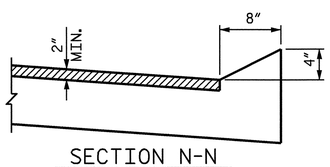

SECTION N-N

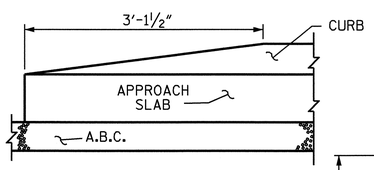

END OF CURB WITHOUT SHOULDER BERM GUTTER

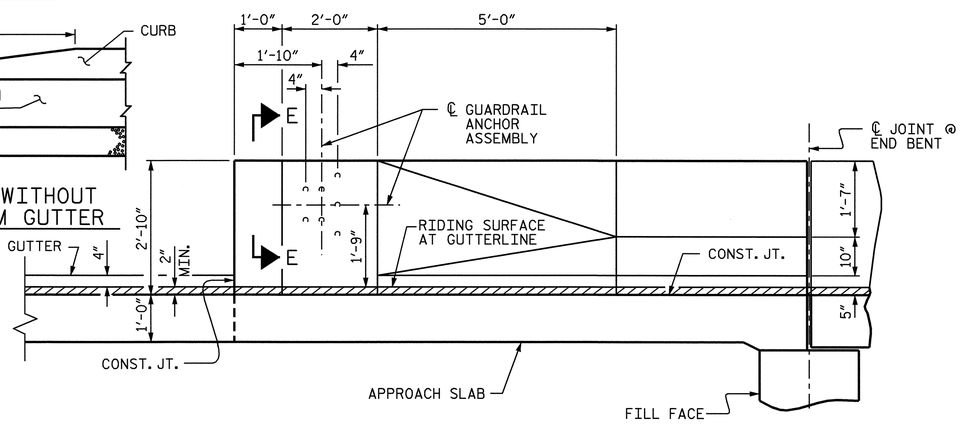

ELEVATION

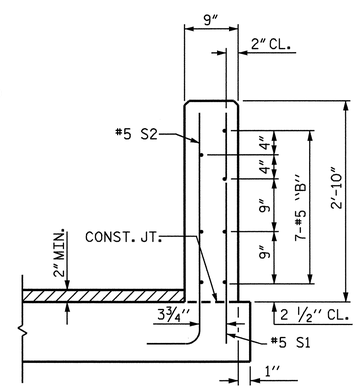

SECTION M-M

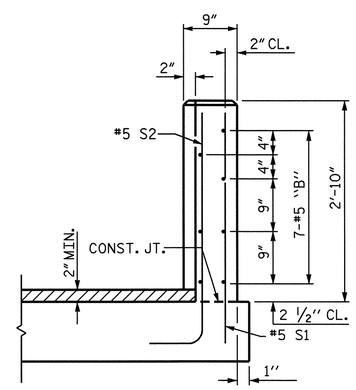

END VIEW

PROJECT NO. B-3454

FORSYTH COUNTY

STATION: 20+93.00 -L-

SHEET 3 OF 4

STATE OF NORTH CAROLINA
DEPARTMENT OF TRANSPORTATION
RALEIGH

STANDARD

BRIDGE APPROACH SLAB DETAILS FOR PRESTRESSED CONCRETE CORED SLAB WITH BARRIER RAIL

NORTH CAROLINA PROFESSIONAL SEAL 15825 ENGINEER BRUCE D. KLAPPENBACH
10-1-04

ASSEMBLED BY : D. A. GLADDEN	DATE : 9-7-04		
CHECKED BY : M. G. SHAIKH	DATE : 9-20-04		
DRAWN BY : LES 8/01	REV. 5/7/03R RWW/JTE		
CHECKED BY : RDR 8/01			

REVISIONS						SHEET NO.
NO.	BY:	DATE:	NO.	BY:	DATE:	5-26
1			3			TOTAL SHEETS
2			4			27

STD. NO. BAS9

29-SEP-2004 11:28
w:\squadl\B3454\dgladden\Microstation\b3454appr.dgn
dgladden