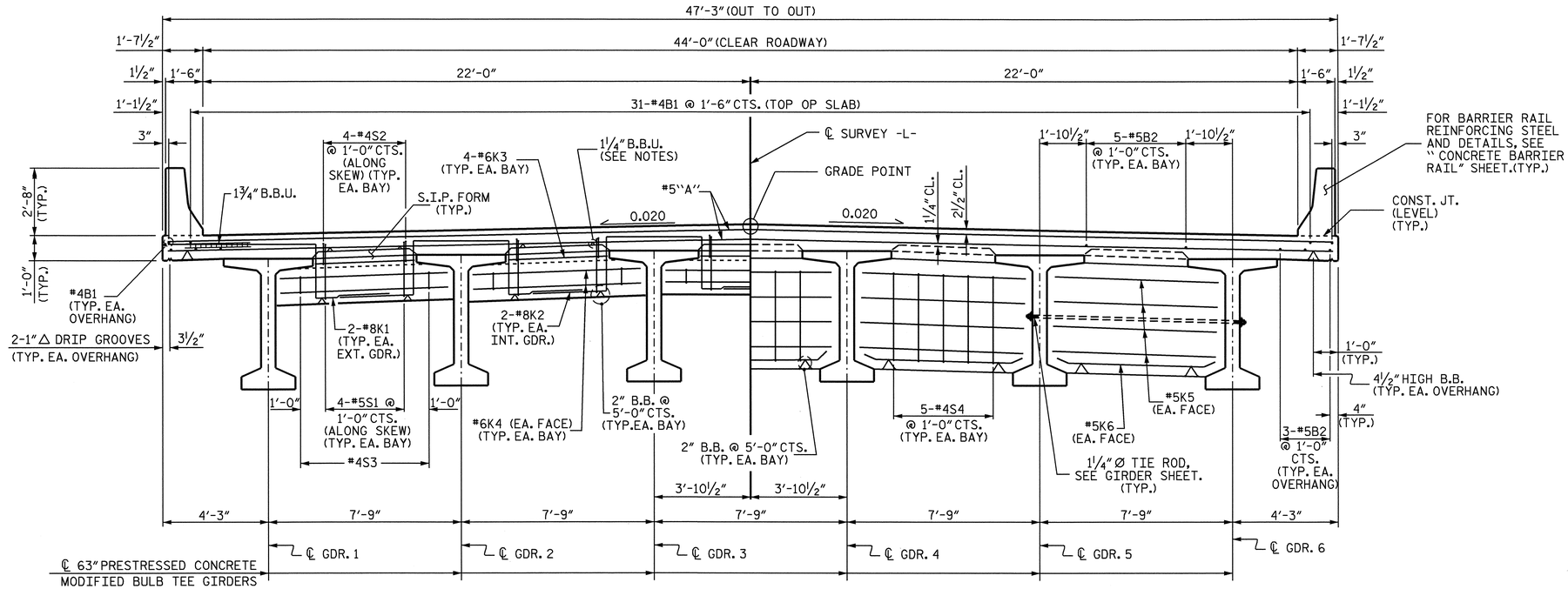

TYPICAL SECTION

SHOWING END BENT DIAPHRAGMS

TYPICAL SECTION

SHOWING INTERMEDIATE DIAPHRAGMS

NOTES

PROVIDE 1 1/4" HIGH BEAM BOLSTERS UPPER AT 4'-0" CTS. ATOP THE METAL STAY-IN-PLACE FORMS TO SUPPORT THE BOTTOM MAT OF 'A' BARS. WHEN USING REMOVABLE FORMS, PROVIDE CONTINUOUS HIGH CHAIRS FOR METAL DECK (C.H.C.M.) @ 4'-0" CTS. WITH A HEIGHT TO SUPPORT THE BOTTOM MAT OF 'A' BARS A CLEAR DISTANCE OF 2 1/2" ABOVE THE TOP OF THE REMOVABLE FORM.

LONGITUDINAL STEEL MAY BE SHIFTED SLIGHTLY, AS NECESSARY, TO AVOID INTERFERENCE WITH STIRRUPS IN PRESTRESSED CONCRETE GIRDERS.

TEMPORARY STRUTS SHALL BE PLACED BETWEEN PRESTRESSED GIRDERS ADJACENT TO THE DIAPHRAGMS AND THE NUTS ON THE 1 1/4" DIA. TIE RODS SHALL BE FULLY TIGHTENED BEFORE THE DIAPHRAGMS ARE CAST. STRUTS SHALL REMAIN IN PLACE 3 DAYS AFTER CONCRETE IS PLACED. THE TIE RODS SHALL BE RE-TIGHTENED AFTER THE STRUTS HAVE BEEN REMOVED.

CONCRETE IN INTERMEDIATE DIAPHRAGMS MAY BE CLASS A IN LIEU OF CLASS AA. PAYMENT SHALL BE MADE UNDER THE UNIT CONTRACT PRICE FOR REINFORCED CONCRETE DECK SLAB.

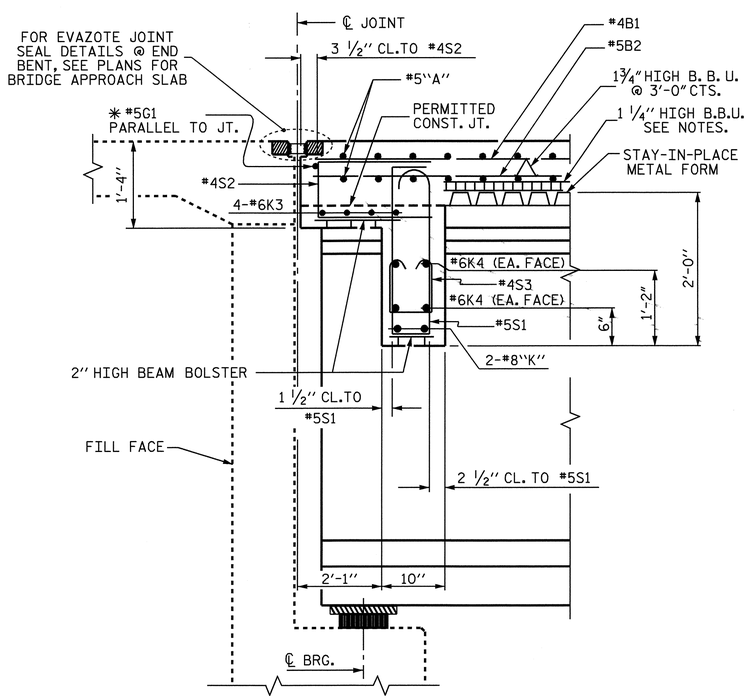

SECTION THRU END BENT DIAPHRAGM

✳ #5G BAR MAY BE SHIFTED SLIGHTLY, AS NECESSARY, TO CLEAR REINFORCING STEEI AND STIRRUPS.

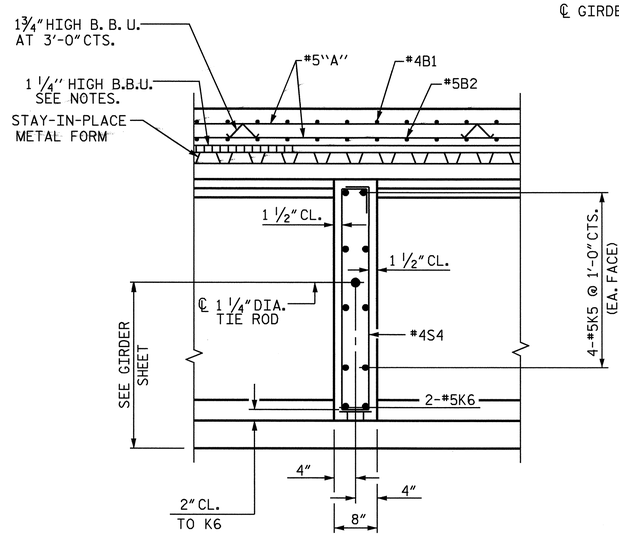

SECTION THRU INTERMEDIATE DIAPHRAGM

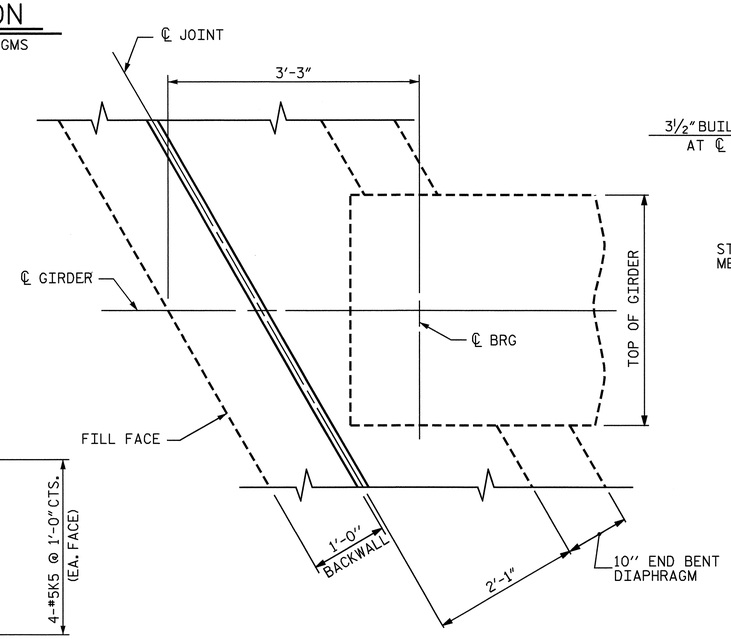

PLAN OF END BENT DIAPHRAGM

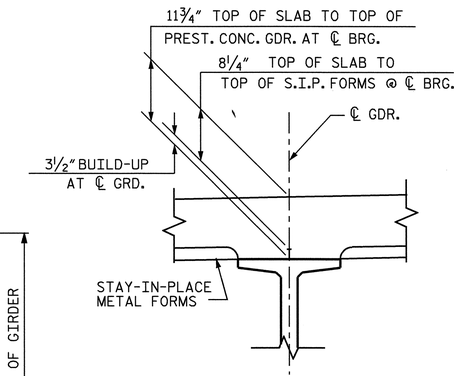

DETAIL

PROJECT NO. B-3300

ASHE COUNTY

STATION: 17+36.00-L-

STATE OF NORTH CAROLINA
DEPARTMENT OF TRANSPORTATION
RALEIGH

SUPERSTRUCTURE
TYPICAL SECTIONS

NORTH CAROLINA PROFESSIONAL SEAL 20125 ENGINEER MARSHALL G. CREEK, JR.
1-3-05

REVISIONS							SHEET NO.
NO.	BY:	DATE:	NO.	BY:	DATE:		S-4
1			3				TOTAL SHEETS
2			4				23

DRAWN BY : V.X.N./L.L. MURPHY DATE : 10-04
CHECKED BY : V.X. NGUYEN DATE : 12-04

21-DEC-2004 08:46
W:\sdquady\b3300\lmurphy\Microstation\B3300_sd_TS_01.dgn
wjharris